EARTH MANUAL

PART 2

A WATER RESOURCES TECHNICAL PUBLICATION

THIRD EDITION

U.S. DEPARTMENT OF THE INTERIOR
BUREAU OF RECLAMATION

EARTH MANUAL

PART 2

Third Edition

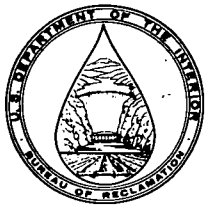

Materials Engineering Branch
Research and Laboratory Services Division
Denver Office
1990

U.S. DEPARTMENT OF THE INTERIOR
BUREAU OF RECLAMATION

Mission: As the Nation's principal conservation agency, the Department of the Interior has responsibility for most of our nationally-owned public lands and natural and cultural resources. This includes fostering wise use of our land and water resources, protecting our fish and wildlife, preserving the environmental and cultural values of our national parks and historical places, and providing for the enjoyment of life through outdoor recreation. The Department assesses our energy and mineral resources and works to assure that their development is in the best interests of all our people. The Department also promotes the goals of the Take Pride in America campaign by encouraging stewardship and citizen responsibility for the public lands and promoting citizen participation in their care. The Department also has a major responsibility for American Indian reservation communities and for people who live in Island Territories under U.S. Administration.

Mission of the Bureau of Reclamation

The Bureau of Reclamation of the U.S. Department of the Interior is responsible for the development and conservation of the Nation's water resources in the Western United States.

The Bureau's original purpose "to provide for the reclamation of arid and semiarid lands in the West" today covers a wide range of interrelated functions. These include providing municipal and industrial water supplies; hydroelectric power generation; irrigation water for agriculture; water quality improvement; flood control; river navigation; river regulation and control; fish and wildlife enhancement; outdoor recreation; and research on water-related design, construction, materials, atmospheric management, and wind and solar power.

Bureau programs most frequently are the result of close cooperation with the U.S. Congress, other Federal agencies, States, local governments, academic institutions, water-user organizations, and other concerned groups.

Any use of trade names and trademarks in this publication is for descriptive purposes only and does not constitute endorsement by the Bureau of Reclamation.

SI METRIC

The information contained in this report regarding commercial products or firms may not be used for advertising or promotional purposes and is not to be construed as an endorsement of any product or firm by the Bureau of Reclamation.

PREFACE

The *Earth Manual*, Third Edition—presented in two separate parts—provides technical information on: properties of soils, field and laboratory investigations, and quality construction control of soils used as foundations and materials for dams, canals, and many other types of structures built for Bureau of Reclamation projects in the Western United States. The *Earth Manual* contains standardized procedures that have been determined desirable for securing uniform results throughout Reclamation. It includes general guidelines intended to complement but not to substitute for sound engineering judgment.

Part 1 discusses general earth and foundation technology applicable to the construction of water resources structures. Included in Part 1 are chapters on: the properties of soils, principles and stages of soil investigations, and quality control of earth construction.

Part 2 contains standard procedures for investigating and testing soil materials for engineering design, construction, and operation and maintenance of water resources structures. Research and development continue to produce improvements in the knowledge of geotechnical materials and methods in which those materials are evaluated. Therefore, users benefit from the latest technologies.

In a departure from previous *Earth Manual* editions, soil testing procedures are presented in a step-by-step format to simplify use and to maintain uniformity in soil testing activities. Terminology was standardized to establish consistent use of both symbols and language so that test results are properly understood and interpreted.

Attempts to standardize soil testing procedures are often frustrated by the complex nature of soil testing. Unlike testing of other construction materials such as concrete, steel, and asphalt, soil testing does not always lend itself to strict standardization. If variations from standard procedures outlined in this manual are deemed necessary, the alternative procedures must be described in detail when reporting the test data so that proper interpretation is possible. The procedures described in this manual are provided primarily for the Bureau of Reclamation; however, engineers and technicians from other Government agencies, foreign governments, and private firms, should also find them useful.

Preparation of this manual was an imposing task requiring contributions and suggestions from engineers and technicians from many disciplines throughout the Bureau of Reclamation. The efforts of all those who contributed to this work are appreciated.

Special recognition is accorded Robert Scavuzzo whose resolute efforts were instrumental in completing Part 2 of the manual. Raymond Acciardi and DeWayne Campbell provided early coordination. Others recognized for their contributions are W. G. Austin, A. A. Benavidez, V. D. Goldsmith, A. K. Howard, R. T. Sirokman, and R. A. Young. D. L. Oswandel and Vicki Romero coordinated production of the many new data forms. Field personnel who recognized inconsistencies in preliminary distributions of the procedures are commended for their efforts in resolving those issues. Part 2 of this Third Edition was edited and coordinated by Richard Walters.

Denver, Colorado
October 1990

Paul Knodel

CONTENTS

USBR No.		Page
	Introduction	1
1000	Standards for Linear Measurement Devices	5
1007	Calibrating Dial Indicators	8
1008	Calibrating Linear Variable Differential Transformers	14
1009	Calibrating Compaction Molds	21
1010	Calibrating Unit Weight Measures	26
1011	Calibrating Measures for Sand Calibration	31
1012	Calibrating Balances or Scales	38
1020	Calibrating Ovens	42
1025	Checking Sieves	45
1030	Calibrating Specific Gravity Flasks	66
1040	Calibrating Pressure Gauges	70
1045	Calibrating Force Transducers (Load Cells)	74
1050	Calibrating Pressure Transducers	82
1055	Calibrating Differential Pressure Transducers	86
1060	Calibrating the Calcium Carbide Reaction Device	92
1405	Calibrating Hydrometers	97
1410	Calibrating the Soil Penetrometer	103
1415	Calibrating Laboratory Mechanical Compactors	106
1420	Calibrating Head Tanks	112
1425	Calibrating Permeability Test Equipment	116
1430	Calibrating the Loading Device for Permeability Tests	120
1435	Calibrating Sand-Cone Equipment and Sand	123
1436	Calibrating Sand Pouring Equipment and Sand	130
1440	Calibrating the Vibratory Table for Maximum Index Unit Weight Testing	134
1445	Calibrating the Torvane Shear Device (Pocket Vane Shear Meter)	155
1450	Calibrating Triaxial-Type Chambers for Pressure-Volume Change Relations	161
1455	Calibrating Volume and Drain Tubes	166
3000	Using Significant Digits in Calculating and Reporting Laboratory Data	170
3900	Standard Definitions of Terms and Symbols Relating to Soil Mechanics	172
4617	Capping Cylindrical Concrete Specimens	184
5000	Determining Unified Soil Classification (Laboratory Method)	191
5005	Determining Unified Soil Classification (Visual Method)	204
5100	Performing Radiographic Inspection of Soil or Rock Samples	216
5200	Processing Tube-Type Samples	220
5205	Preparing Soil Samples by Splitting or Quartering	228
5210	Preparing Compacted Soil Specimens for Laboratory Use	242
5215	Preparing Soil Specimens for Laboratory Use From Undisturbed Samples	287
5300	Determining Moisture Content of Soil and Rock by the Oven Method	293
5305	Determining Moisture Content of Soils Using the Moisture Teller Device	298
5310	Determining Moisture Content of Soils Using the Calcium Carbide Reaction Device	302
5315	Determining Moisture Content of Soils by the Microwave Oven Method	307
5320	Determining Specific Gravity of Soils	311
5325	Performing Gradation Analysis of Gravel Size Fraction of Soils	323
5330	Performing Gradation Analysis of Fines and Sand Size Fraction of Soils,Including Hydrometer Analysis	331
5335	Performing Gradation Analysis of Soils Without Hydrometer — Wet Sieve	340
5345	Performing Gradation Analysis of Soils by the Bottom Withdrawal Test Method	347
5350	Determining the Liquid Limit of Soils by the One-Point Method	355
5355	Determining the Liquid Limit of Soils by the Three-Point Method	363
5360	Determining the Plastic Limit and Plasticity Index of Soils	371
5365	Determining Shrinkage Limit and Shrinkage Ratio of Soils	376
5370	Determining Unit Weight of Cylindrical Soil Specimens	384
5372	Determining Unit Weight of Cylindrical Tube-Type Samples	390
5375	Determining Dry Unit Weight of Irregularly Shaped Soil Specimens	403
5380	Determining the Angle of Repose of Soils	407
5400	Determining Dispersibility of Clayey Soils by the Crumb Test Method	414
5405	Determining Dispersibility of Clayey Soils by the Double Hydrometer Test Method	419
5410	Determining Dispersibility of Clayey Soils by the Pinhole Test Method	425
5430	Determining Moisture, Ash, and Organic Content of Soil	438
5450	Determining Water Soluble Solids in Soils	442
5500	Performing Laboratory Compaction of Soils — 5.5-lbm Rammer and 18-in Drop	447
5505	Determining Moisture Content–Penetration Resistance Relationships of Fine-Grained Soils	459
5510	Performing Laboratory Compaction of Soils — Harvard Miniature	465
5515	Performing Laboratory Compaction of Soils Containing Gravel	477
5525	Determining the Minimum Index Unit Weight of Cohesionless Soils	496

CONTENTS — Continued

USBR No.		Page
5530	Determining the Maximum Index Unit Weight of Cohesionless Soils	504
5600	Determining Permeability and Settlement of Soils [8-in (203-mm) Diameter Cylinder]	520
5605	Determining Permeability and Settlement of Soils Containing Gravel	538
5610	Determining Permeability of Soil by the Back-Pressure Test Method	558
5615	Performing Radial Vacuum Permeability Test for Soil-Cement or Porous Rock	587
5630	Performing Filter Testing	592
5700	Determining the One-Dimensional Consolidation Properties of Soils (Incremental Stress)	623
5705	Determining the One-Dimensional Expansion Properties of Soils	654
5715	Determining the One-Dimensional Uplift Properties of Soils	672
5720	Performing Unconfined Compressive Strength Testing of Soils	689
5725	Performing Direct Shear Testing of Soils	695
5726	Performing Repeated Direct Shear Testing of Soils	709
5730	Performing Rotational Shear Testing of Soils	724
5735	Determining Initial Capillary Pressure of Soils	737
5740	Determining Lateral Earth Pressure (K_o) by the Triaxial Test Method	746
5745	Performing Unconsolidated-Undrained Triaxial Shear Testing of Soils	776
5750	Performing Consolidated-Undrained Triaxial Shear Testing of Soils	807
5755	Performing Consolidated-Drained Triaxial Shear Testing of Soils	833
5765	Performing Laboratory Vane Shear Testing of Soils	857
5770	Performing Torvane (Pocket Vane Shear Meter) Testing of Soils	865
5800	Performing Laboratory Compaction of Soil-Cement Mixtures	869
5805	Preparing Soil-Cement Specimens for Compressive Strength Testing for Mix Designs	875
5806	Preparing Soil-Cement Specimens for Compressive Strength Testing for Construction Control	890
5807	Preparing and Testing Soil-Cement Slurry Test Cylinders	895
5810	Performing Compressive Strength Testing of Soil-Cement Cylinders	899
5815	Preparing Soil-Cement Specimens for Durability Testing	907
5820	Performing Wet-Dry Durability Testing of Compacted Soil-Cement Mixtures	921
5825	Performing Freeze-Thaw Durability Testing of Compacted Soil-Cement Mixtures	929
5830	Performing Construction Control of Soil-Cement	937
5835	Performing Record Coring and Cross Sectioning of Compacted Soil-Cement	945
5850	Performing Laboratory Compaction of Soil-Lime Mixtures	953
5855	Preparing Soil-Lime Specimens for Compression Testing	959
5860	Performing Compressive Strength Testing of Compacted Soil-Lime Mix	968
5865	Performing Construction Control of Compacted Soil-Lime Mixtures	976
5870	Performing Record Coring and Cross Sectioning of Compacted Soil-Lime	986
5875	Determining Soil-Lime pH	992
5890	Preparing Laboratory Bentonitic Slurry Sample	996
5891	Determining Coarse-Grained Portion of a Slurry by the Sand Content Test Method	999
5892	Determining Slurry Unit Weight by the Mud Balance Test Method	1002
5893	Determining Slurry Filtration Characteristics by the Filter Press Test Method	1006
5894	Determining Slurry Viscosity by the Marsh Funnel Test Method	1010
5895	Determining Slurry Viscosity by the Viscometer Test Method	1013
7000	Performing Disturbed Soil Sampling in Test Pits, Trenches, Accessible Borings, and Tunnels	1017
7010	Performing Disturbed Soil Sampling Using Auger Boring Method	1022
7015	Performing Penetration Resistance Testing and Sampling of Soil	1030
7020	Performing Cone Penetration Testing of Soils — Mechanical Method	1043
7021	Performing Cone Penetration Testing of Soils — Electrical Method	1061
7100	Obtaining Undisturbed Block Samples by the Hand and Chain Saw Methods	1079
7105	Performing Undisturbed Soil Sampling by Mechanical Drilling Methods	1084
7115	Performing Field Vane Shear Testing	1111
7205	Determining Unit Weight of Soils In-Place by the Sand-Cone Method	1121
7206	Determining Unit Weight of Soils In-Place by the Rubber Balloon Method	1135
7215	Determining the Unit Weight of Soils In-Place by the Sleeve Method	1141
7216	Determining the Calibration Equation for the Unit Weight of Soils In-Place by the Sleeve Method	1146
7220	Determining Unit Weight of Soils In-Place by the Sand Replacement Method in a Test Pit	1156
7221	Determining Unit Weight of Soils In-Place by the Water Replacement Method in a Test Pit	1172
7230	Determining Unit Weight and Moisture Content of Soil In-Place — Nuclear Moisture-Density Gauge	1188
7240	Performing Rapid Method of Construction Control	1201
7250	Determination of Percent Relative Density	1219
7255	Determining the Percent Compaction of Earthwork for Construction Control	1224
7300	Performing Field Permeability Testing by the Well Permeameter Method	1227
7305	Field Permeability Test (Shallow-Well Permeameter Method)	1237
7310	Constant Head Hydraulic Conductivity Tests in Single Drill Holes	1245
7400	Testing Foundation Members Under Static Axial Tensile Load	1260
9300	Checking, Rounding, and Reporting of Laboratory Data	1267

INTRODUCTION

General

The Third Edition of the *Earth Manual*, unlike previous editions, is comprised of two Parts. Part 1 includes chapters on: the properties of soils, principles and stages of soil investigations, and quality control of earth construction. Part 2 is a compilation of the soil testing procedures currently used by the Bureau of Reclamation.

Part 2 of the manual includes many new testing procedures that were not in the Second Edition. The procedures that were in the Second Edition—which are included in this Part 2—have been revised to reflect current soil testing concepts and techniques. A few of the procedures in the Second Edition were outdated and deleted from this edition. The procedures in the Second Edition that described instrumentation for monitoring dams were deleted from this edition and now appear in other Reclamation publications. Designations E-27 through E-32 were rewritten and published in the *Embankment Dam Instrumentation Manual.*[1] Designations E-33 and E-34 were published in the *Concrete Dam Instrumentation Manual.*[2] Former Designation E-35 is included in both instrumentation manuals because recording of earthquake vibrations is applicable to both embankment and concrete dams. In the few instances where no new USBR designation or other publication is applicable; i.e., E-22, E-23, and E-39, the E-designation from the Second Edition may still be used.

To assist those familiar with the E-designation test series, in the *Earth Manual* (2d ed.), a cross-reference to the new USBR designation is provided.

Cross-Reference to Current USBR Designations

E-Designation (2d edition, 1974)	*USBR Designations* (Part 2, 3d edition)
E-1 Disturbed Sampling of Soils	7000, 7010
E-2 Undisturbed Sampling of Soils	7100, 7105
E-3 Visual and Laboratory Methods for Identification and Classification of Soils	5000, 5005
E-4 List of Laboratory Equipment	All USBR designations as required
E-5 Preparation of Soil Samples for Testing	5205
E-6 Gradation Analysis of Soils	5325, 5330, 5335
E-7 Soil Consistency Tests	5350, 5355, 5360, 5365
E-8 Soluble Salts Determination of Soils	5450
E-9 Moisture Determination of Soils	5300, 5305, 5310, 5315
E-10 Specific Gravity of Soils, Aggregate, and Density of Irregular Blocks of Soil	5320, 5375
E-11 Proctor Compaction Test	5500, 5505
E-12 Relative Density of Cohesionless Soils	5525, 5530, 7250
E-13 Permeability and Settlement of Soils	5600
E-14 Permeability and Settlement of Soils Containing Gravel	5605
E-15 One-Dimensional Consolidation of Soils	5700
E-16 Measurement of Capillary Pressures in Soils	5735
E-17 Triaxial Shear of Soils	5740, 5745, 5750, 5755
E-18 Field Permeability Tests in Boreholes	7310
E-19 Field Permeability Tests (Well Permeameter Method)	7300
E-20 Inplace Vane Shear Test	7115
E-21 Field Penetration Test With Split-Tube Sampler	7015
E-22 Needle-Moisture Determination of Soils	None
E-23 Field Density of Dry, Gravel-Free Soils	None
E-24 Field Density Test Procedure	7205, 7220
E-25 Rapid Compaction Control	7240
E-26 Vertical Load-Settlement Relationship for Individual Piles	7400
E-27 Instructions for Installing and Reading Hydraulic-Type Twin-Tube Piezometers in Earth Dams	

[1] *Embankment Dam Instrumentation Manual*, 250 pp., Bureau of Reclamation, Superintendent of Documents, U.S. Government Printing Office, Washington DC 20402, Jan. 1987.

[2] *Concrete Dam Instrumentation Manual*, 153 pp., Bureau of Reclamation, Denver CO, Oct. 1987.

E-Designation (2d edition, 1974)	*USBR Designations* (Part 2, 3d edition)
E-28 Instructions for Installing and Reading Porous-Tube Piezometers	*
E-29 Instructions for Installing and Reading Internal Vertical Movement Devices	*
E-30 Instructions for Installing and Reading Internal Horizontal Movement Devices	*
E-31 Instructions for Installing and Reading Foundation Settlement Apparatus	*
E-32 Instructions for Installing and Reading Measurement Points — Embankment —	*
E-33 Instructions for Installing and Reading Measurement Points — Concrete Structures — Outlet Works Conduits — Conduit-Type Spillways —	†
E-34 Instructions for Installing and Reading Measurement Points — Concrete Structures — Chute and Stilling Basin of Outlet Works — Chute-type Spillways —	†
E-35 Recording Earthquake Vibrations	*, †
E-36 Field Permeability Test (Shallow-Well Permeameter Method)	7305
E-37 Method for Calibrating Mechanical Soil Compactors	1415
E-38 Compaction Test for Soil Containing Gravel	5515
E-39 Investigations for Rock Sources for Riprap	None

* op. cit. 1

† op. cit. 2

The format for presentation of standard Reclamation laboratory procedures follows a Modified Decimal Numbering (MDN) System and a sequence of presentation similar to that used by American Society for Testing and Materials (ASTM). Each procedure has a four-digit number corresponding to the following categories:

Category	*USBR Series*
Equipment calibration	1000
Equipment specifications	2000
General test methods and definitions	3000
Cement and concrete test methods	4000
Soil test methods	5000
Rock test methods	6000
Drilling and sampling methods	7000
General standards	9000
Accreditation and certification	9000
Equipment (list, inventory)	9100
Laboratory buildings	9200
Quality assurance, documentation, and reporting	9300

Standards or methods for some categories are not yet developed, are under development, or are found in other Bureau of Reclamation publications such as the *Concrete Manual (Part 2)*.

Whenever possible, ASTM standards were consulted as a basis for USBR procedures. However, USBR procedures are written in a more detailed step-by-step format and include example data forms and work sheets. Therefore, this volume serves more as a testing handbook than as a collection of standards.

Modifications to Test Procedures

Test procedures were prepared with the intent to maintain testing conformance and consistency throughout the Bureau of Reclamation. Since the test procedures are Reclamation standards, any deviations when approved, must be documented and reported with the test results so that proper interpretations can be made.

A modification of a test procedure may be required because of the type of material to be tested or for a specific design or construction requirement. Modifications must be based on sound engineering judgment; a description of any modification must be included on the test data form(s) and when reporting the test data.

The test procedures described in Part 2 are standard methods and must be performed exactly as prescribed unless modifications are justified and approved by management. *Any* variation in procedure is considered a modification. Some examples would be:

- the addition (or substitution) of a sieve in the standard nest of sieves for gradation analyses,
- a change in conditioning or testing time,
- modifying the soil with additives, or
- changing the specimen size or the maximum particle size allowed.

Although test procedure steps may need to be varied, the equipment specified for the tests herein may *not* be modified under any circumstance without written approval of management. For Reclamation, that approval would come from the Research and Laboratory Services Division at the Denver Office.

When a significant difference exists between the information in Part 2 and contract specifications, the contract specifications always take precedence.

Terminology

Uniformity in terminology and symbols is maintained throughout the *Earth Manual* by use of USBR 3900 "Standard Definitions of Terms and Symbols Relating to Soil Mechanics." Unless otherwise noted, the terms and symbols used in this Part conform to USBR 3900. If a term was defined in ASTM D 653, and not included in USBR 3900 refer to ASTM D 653.

Applicability and Use of Test Results

The test procedures describe how a test is to be performed. Note that only brief references are cited concerning reasons tests are performed and how test results are used. These topics are discussed in more detail in Part 1. However, those who perform the tests should be aware of the applicability of a procedure for the material to be tested. Before a material is tested, it should be determined whether the test procedure is appropriate for a given situation, or if the test procedure must be modified for the specific soil to be tested. In some cases, this may not be apparent until the test is begun, at which time a decision is required either to discontinue the test or to modify the procedure.

For some materials, such as shale, sandstone, siltstone, etc., test results may not reflect the in-place properties of the material due to changes that may occur during processing and/or placement of the material during construction.

When a procedure is modified, or if test results are considered inappropriate, explanations must be included on the test data forms and when reporting the test data. Examples of when explanatory statements are required would be:

(1) In-place materials described as shale, sandstone, siltstone, etc., may have been processed in the laboratory by slaking, grinding, etc., into a more soil-like material. The results from Atterberg limits tests or from other analyses would delineate the properties of the "soil" after processing but would not represent the in-place characteristics of the material. However, these test results are still useful in providing data for identifying and classifying the material and in determining its potential for construction use.

(2) The properties of some materials are irreversibly affected by air or oven drying. Soils containing organic matter or certain clay materials such as allophane or halloysite have different properties after being air dried even though water is later added to bring them back to their original moisture content. Soils of volcanic origin are particularly susceptible to this behavior. When results of tests on these soils are critical, the soils should not be allowed to dry below their in-place moisture content. Clay soils to be tested for dispersive characteristics should also be maintained at in-place moisture content.

Other examples and more detailed discussions of the applicability of test results are given in Part 1.

Calibration

Separate procedures were prepared for equipment calibration. Regular, careful calibration and inspection of equipment are as important as adhering to proper testing procedures to ensure acceptable accuracy of test results. Results of soil testing can be only as accurate as the procedures and equipment used in performing the tests.

Balances or Scales

In almost every test procedure, a balance or scale is listed in the "Apparatus" paragraph with a required capacity adequate for the necessary measurement of mass for that procedure. The readability specified for each balance or

scale is normally that required within the procedure to obtain measurements of sufficient accuracy for reliable test results. In some cases there may be differences between the balance capacity stated and the requirements of the procedure. The intent throughout Part 2 was to limit the number of balances or scales required for a particular laboratory. Therefore, the capacities of balances or scales used in a typical geotechnical laboratory were cited. If the balances or scales available in a given laboratory are different from those typically required, the capacities must be compared with those described in the procedure to ascertain if sufficient capacity is available to perform the test.

The precision or accuracy required for a balance or scale is not given in the individual procedures, but acceptable tolerance for any error difference is specified in USBR 1012.

Tare Mass

In many test procedures, the mass of a container is to be determined and later subtracted from the mass of the container plus its contents. It is permissible to use a tare mass or tare setting equal to the mass of the container so that the mass of the container need not be recorded.

Checking Data Forms

Test procedures in Part 2 include example data forms to illustrate what data are required and where they are to be recorded. Checking data computations is as important as performing the test; the test is not considered complete until the data form has been checked. Checkmarks are not shown on the example data forms so that required data could be illustrated in a neat and legible fashion. Instructions for checking, and an example of a typically checked data form, are presented in USBR 9300 "Checking, Rounding, and Reporting of Laboratory Data." This document should be reviewed and understood as it is considered part of every test procedure.

Proprietary Materials

Occasionally, references are made to proprietary materials or products; references must not be construed as an endorsement. The Bureau of Reclamation does not and cannot endorse proprietary products or processes of manufacturers or the services of commercial firms for advertising, publicity, sales, or other purposes.

Future Revision

Each test procedure has a fixed USBR procedure number followed by the year of acceptance or the year of last revision. Revisions will be issued as required and the user must ascertain that the latest revision is being used.

After each test procedure was written, it was checked, validated whenever practical, and extensively reviewed. However, because the procedures are presented in a new format covering both new procedures and revisions to existing procedures, possible errors and omissions may exist. User comments and suggestions for improvement are invited and should be directed to the Bureau of Reclamation, Research and Laboratory Services Division, Denver Office.

Denver Office Organization

Bureau of Reclamation organizational units are noted in the introduction of each test procedure and within the text of others. Recent organizational changes make those references obsolete; where those references are cited, inquiries should be directed to:

Bureau of Reclamation
Research and Laboratory Services Division
Materials Engineering Branch, D-3730
PO Box 25007
Denver, CO 80225

UNITED STATES DEPARTMENT OF THE INTERIOR
BUREAU OF RECLAMATION

USBR 1000-89

PROCEDURE FOR

STANDARDS FOR LINEAR MEASUREMENT DEVICES

INTRODUCTION

This procedure is under the jurisdiction of the Geotechnical Services Branch, code D-3760, Research and Laboratory Services Division, Denver Office, Denver, Colorado. The procedure is issued under the fixed designation USBR 1000. The number immediately following the designation indicates the year of acceptance or the year of last revision.

1. Scope

1.1 This designation outlines the procedure for ordering and maintaining quality control of linear measurement devices to be used for laboratory and field applications. Minimum requirements for tapes, calipers, micrometers, and gauge blocks are outlined in this designation. It is strongly recommended that a certificate of inspection certifying that the linear measurement device meets the standards of the applicable Federal specifications be obtained when purchasing these devices.

2. Applicable Documents

2.1 *Federal Specifications*:
GGG-T-106D Tape Measuring, General Use
GGG-R-791F Rules, Measuring
GGG-C-111B Calipers and Gages, Vernier
GGG-C-105B Caliper, Micrometer (Inside, Outside, Tube) and Gage, Depth Micrometer
GGG-C-15C Gage Blocks and Accessories

3. Significance and Use

3.1 Accurate linear measurements must be taken to obtain proper values from laboratory and field tests.

3.2 The information in this designation is to be used whenever any of the linear measurement devices listed in paragraph 5 are purchased.

3.3 With the exception of tapes and rules, linear measurement devices should be returned to the manufacturer or to an appropriate certification agency biennially for recertification.

4. Terminology

4.1 *Traceability Certificate.*–A certificate of inspection certifying that a linear measurement device meets the Federal specifications for its particular grade or model and that its accuracy is traceable to the National Institute of Standards and Technology (National Bureau of Standards) or the international standard of length.

5. Apparatus

5.1 *Flexible Metal Printed Tape.*–A device used to obtain accurate linear measurements and is usually enclosed in a roll-up case. Flexible metal printed tapes should meet the requirements of Federal Specification GGG-T-106D. The tapes are to be housed in a suitable case. Inch-pound scale tapes having a length of 6, 8, or 12 feet are generally adequate for most laboratory and field applications. Metric scale tapes having a length of 2 to 3 meters are generally adequate for most laboratory and field applications. A certificate of inspection certifying that the flexible metal printed tape meets Federal specifications is to be obtained from the manufacturer when ordering the tape.

5.2 *Engraved Metal Rule.*–A device manufactured from tool steel which is used to obtain accurate linear measurements. Engraved metal rules should meet the requirements of Federal Specification GGG-R-791F. The rule is to be constructed in one piece without joints and is to be made of tool steel. A certificate of inspection certifying that the engraved metal rule meets Federal specifications is to be obtained from the manufacturer when ordering the rule.

5.3 *Hardwood Rule.*–A device used to obtain accurate linear measurements manufactured from hardwood. The hardwood rule should meet the requirements of Federal Specification GGG-R-791F. The hardwood rule is to be constructed in one piece of well-seasoned hardwood from birch, boxwood, or hard maple. The wood is to be straight-grained and clear throughout. A rule that is marked with the inch-pound scale (1/8-inch graduations) on one face and the metric scale (1-cm graduations) on the other face is adequate for most laboratory and field applications.

5.4 *Vernier or Dial Calipers.*–A measuring device which consists of a main scale with a fixed jaw and a sliding jaw with an attached vernier and is used to obtain precise inside, outside, or depth measurements. Vernier or dial calipers should meet the requirements of Federal Specification GGG-C-111B. Inch-pound scale vernier or dial calipers which have a measuring range of 0 to 6 inches must be graduated to read in thousandths of an inch (0.001 in). Metric scale vernier or dial calipers which have a measuring range of 0 to 150 mm must be graduated to read in two one-hundredths of a millimeter (0.02 mm). A certificate of inspection certifying that the vernier or dial caliper meets Federal specifications is to be obtained from the manufacturer when ordering the calipers.

5.5 *Outside Micrometer.*–A device which is used to obtain precise outside measurements. Outside micrometers should meet the requirements of Federal Specification

GGG-C-105B. Inch-pound scale outside micrometers which have a measuring range of 0 to 1.000 inch must be graduated to read to at least one-thousandth of an inch (0.001 in). Metric scale outside micrometers which have a measuring range of 0 to 25 mm must be graduated to read to at least two one-hundredths of a millimeter (0.02 mm). A certificate of inspection certifying that the outside micrometer meets the Federal specification is to be obtained from the manufacturer when ordering the micrometer.

5.6 *Inside Micrometers.*–A device which is used to obtain precise inside measurements. Inside micrometers should meet the requirements of Federal Specification GGG-C-105B. Inch-pound scale inside micrometers which have a measuring range of 2 to 12 inches must be graduated to read to at least one-thousandth of an inch (0.001 in). Metric scale inside micrometers which have a measuring range of 50 to 300 mm must be graduated to read to at least two one-hundredths of a millimeter (0.02 mm). A certificate of inspection certifying that the inside micrometer meets Federal specifications is to be obtained from the manufacturer when ordering the micrometer.

5.7 *Depth Micrometers.*–A device which is used to obtain precise depth measurements. Depth micrometers should meet the requirements of Federal Specification GGG-C-105B. Inch-pound scale depth micrometers which have a metering range of 0 to 10 inches must be graduated to read to at least one-thousandth of an inch (0.001 inch). Metric scale depth micrometers which have a measuring range of 250 mm must be graduated to read to at least two one-hundredths of a millimeter (0.02 mm.) A certificate of inspection certifying that the depth micrometer meets Federal specifications is to be obtained from the manufacturer when ordering the micrometer.

5.8 *Rectangular Gauge Blocks.*–Precision steel rectangular gauge blocks are designed to be used individually. Gauge blocks are suitable for checking dial caliper, vernier caliper, micrometer caliper, and dial indicator travel. Inch-pound and metric scale gauge blocks are to be compatible with the calibration requirements; i.e., dial gauges, calipers, etc. A certificate of inspection certifying that the rectangular gauge blocks meet Federal specifications is to be obtained from the manufacturer when ordering the gauge blocks.

5.9 *Square Gauge Blocks.*–Precision steel square gauge blocks are designed for stack assembly. An accessory hole is drilled through the center of each gauge block to allow the tie rod to pass through for assembly. A certificate of inspection certifying that the square gauge blocks meet Federal specifications is to be obtained from the manufacturer when ordering the gauge blocks.

6. Precautions

6.1 *Safety Precautions.*–Examine the linear measurement devices (as received or before their use) for sharp edges or burrs.

6.2 *Technical Precautions*:

6.2.1 Examine the linear measurement devices for bent or missing components each time they are used.

6.2.2 Store the linear measurement devices in a suitable case when not in use.

6.2.3 Occasionally rub or wipe the linear measurement device with an oily rag if it is used in a wet or damp environment (not applicable for hardwood rules).

6.2.4 Use extreme caution when marking control numbers on linear measurement devices. Under no circumstances should the precision gauge blocks be marked or scribed by the purchaser. The manufacturer stamps the dimensions and serial number on the block at the time of manufacture and calibration.

7. Calibration and Standardization

7.1 Verify that the certificate of inspection is current. If it is not current, the linear measurement device should not be used.

It is recommended that linear measurement devices be returned to the manufacturer or to an appropriate certification agency biennially for recertification.

8. Conditioning

8.1 Not applicable, special conditioning requirements are not needed for this procedure.

9. Procedure

9.1 *Purchasing*:

9.1.1 All information is to be recorded on the "Linear Measurement Device Acceptance Form" as shown on figure 1.

9.1.2 Determine the type of measurement device that is needed, e.g., when determining the volume of relative density measures, one needs a depth micrometer with a measuring range of 0 to 10 inches and an inside micrometer with a measuring range of 2 to 12 inches.

9.1.3 Determine the nominal range of the item or items to be measured.

9.1.4 Obtain a catalog from a reputable supplier that supplies precision linear measurement devices.

9.1.5 Determine if the supplier can furnish the linear measurement device needed to accomplish the task.

9.1.6 Determine if the supplier can furnish a certificate of inspection and if construction and accuracy comply with applicable Federal specifications.

9.2 Upon receipt of the linear measurement device, the following items should be noted.

- Date of receipt
- Type of linear measurement device
- Name of the manufacturer
- Serial number of the linear measurement device
- Are the range and scale markings on the linear measurement device as specified on the purchase order?
- Check the certificate of inspection to ensure that it is current and that the data listed on it are applicable to the device (serial number and type).

10. Interpretation of Results

10.1 Use the instructions and tables listed in the applicable Federal specifications to aid in determining if the

linear measurement device complies with the special requirements.

10.2 If the linear measurement device meets all of the specified requirements, accept the device; if it does not, it is to be rejected and returned to the manufacturer.

11. Report

11.1 The report is to consist of a completed "Linear Measurement Device Acceptance Form." This information (fig. 1) should be filed with the laboratory equipment calibration records.

7-2300 (12-86) Bureau of Reclamation	LINEAR MEASUREMENT DEVICE ACCEPTANCE FORM	Designation USBR 1000 8 9

PART 1. (COMPLETE WHEN ORDERING THE LINEAR MEASUREMENT DEVICE.)

1. ORDERED BY Example DATE 6/17/89
2. TYPE OF LINEAR MEASUREMENT DEVICE Depth micrometer
3. NOMINAL MEASURING RANGE REQUIEMENTS 0-10 inches
4. SCALE MARKING REQUIREMENTS 0.001 inch
5. NAME AND ADDRESS OF SUPPLIER Example
6. IS A CERTIFICATE OF INSPECTION FURNISHED? ☒ YES ☐ NO

PART 2. (COMPLETED UPON RECEIPT OF THE LINEAR MEASUREMENT DEVICE.)

1. RECEIVED BY Example DATE 8/26/89
2. TYPE OF LINEAR MEASURMENT DEVICE Depth micrometer
3. NAME OF MANUFACTURER Example
4. SERIAL NUMBER DM-4967550
5. DO THE RANGE AND SCALE MARKINGS COMPLY WITH THE SPECIFIED REQUIREMENTS?

   ☒ YES ☐ NO
6. IS THE CERTIFICATE OF INSPECTION VALID? ☒ YES ☐ NO

☒ ACCEPT ☐ REJECT

Figure 1. - Linear measurement device acceptance form — example.

UNITED STATES DEPARTMENT OF THE INTERIOR
BUREAU OF RECLAMATION

USBR 1007-89

PROCEDURE FOR

CALIBRATING DIAL INDICATORS

INTRODUCTION

This procedure is under the jurisdiction of the Geotechnical Services Branch, code D-3760, Research and Laboratory Services Division, Denver Office, Denver, Colorado. The procedure is issued under the fixed designation USBR 1007. The number immediately following the designation indicates the year of acceptance or the year of last revision.

1. Scope

1.1 This designation outlines the procedure for calibrating dial indicators for laboratory and field applications.

1.2 Method A outlines the calibration procedure using precision gauge blocks; Method B outlines the calibration procedure using a micrometer fixture.

2. Applicable Documents

2.1 *USBR Procedures*:

USBR 1000 Standards for Linear Measurement Devices
USBR 3900 Standard Definitions of Terms and Symbols Relating to Soil Mechanics

2.2 *ASME Standard*:

ANSI B89.1.10 Dial Indicators (for Linear Measurement)

2.3 *Federal Specification*:

GGG-G-15C Gage Blocks and Accessories

3. Summary of Method

3.1 Comparison readings between a dial indicator and either precision gauge blocks (method A) or a micrometer fixture (method B) are used to determine the accuracy, repeatability, and hysteresis of the dial indicator. The results are used to evaluate the acceptability of dial indicators for laboratory and field use.

4. Significance and Use

4.1 Accurate linear measurements are required to obtain proper data for laboratory and field use.

4.2 Calibrate dial indicators when purchased and annually thereafter.

5. Terminology

5.1 Definitions are in accordance with USBR 3900.

5.2 Terms not included in USBR 3900 specific to this designation are:

5.2.1 *Accuracy.*–The degree to which displayed dial indicator readings vary from known spindle displacements.

5.2.2 *Graduation.*–The least measured value which is marked on the dial indicator face.

5.2.3 *Hysteresis.*–The difference in displayed dial indicator readings at any particular spindle displacement within the specified range, when the dial indicator reading is approached first with increasing and then with decreasing spindle displacements.

5.2.4 *Range.*–The measured values over which the dial indicator is intended to measure, specified by upper and lower limits.

5.2.5 *Repeatability.*–The degree to which displayed dial indicator readings vary for successive measurements of the same reference.

6. Apparatus

6.1 *Dial Indicator.*–A dial indicator used for standard laboratory or field applications.

6.2 *Method A — Precision Gauge Block Calibration*:

6.2.1 *Precision Gauge Blocks* (fig. 1a).–A set of steel gauge blocks (inch-pound or metric), usually rectangular, meeting the requirements of Federal Specifications GGG-G-15C and those requirements identified in USBR 1000 for precision gauge blocks. A gauge block set should contain sizes (or combination of sizes) necessary to satisfactorily perform the calibration procedure as outlined in paragraph 10.

6.2.2 *Dial Indicator Comparator Stand* (fig. 1b).–A stand consisting of a base; ground to a guaranteed flatness and warp-free stability; a support column and an adjustable arm onto which the dial indicator can be securely attached.

6.3 *Method B — Micrometer Fixture Calibration*:

6.3.1 *Micrometer Fixture* (fig. 2a).–A precision instrument capable of obtaining comparison readings over the full range of the dial indicator. The spindle must be nonrotating and spring loaded. The micrometer fixture is to be calibrated annually by the manufacturer.

6.3.2 *Magnetic Base Dial Indicator Holder* (fig. 2b).–A magnetic base with a solid upright post adapted with a swivel snug, gauge rod, and dial indicator clamp with fine adjustment capabilities.

7. Precautions

7.1 *Safety Precautions.*–The dial indicator case, stem, spindle, and contact point are to be examined for burrs and sharp edges.

7.2 *Technical Precautions*:

7.2.1 The dial face is to be examined for clarity of graduations.

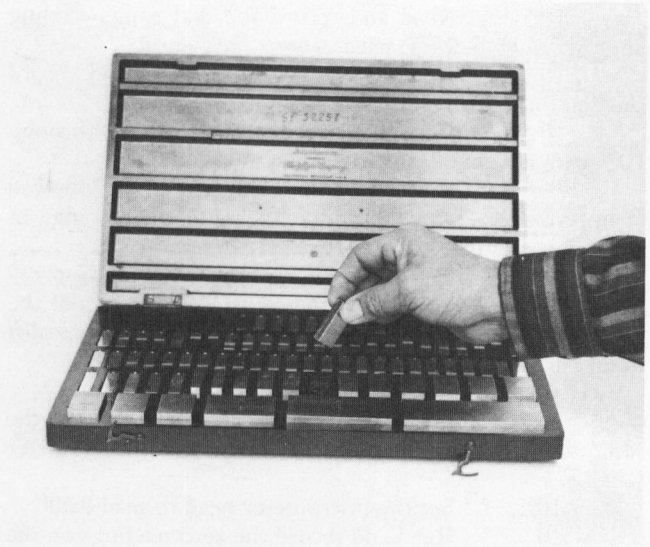

(a) Precision gauge blocks.

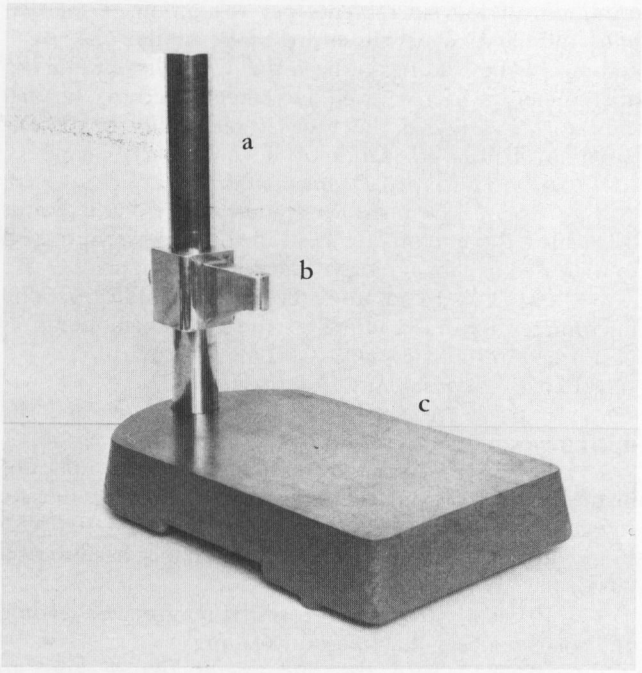

(b) Dial indicator comparator stand. a) support column, b) adjustable arm, and c) base.

Figure 1. – Dial indicator calibration equipment (method A).

7.2.2 The dial indicator is to be replaced if there is any evidence of binding or twisting when the spindle is pushed into the stem.

7.2.3 Extreme caution is to be used when inscribing or marking control numbers on the dial indicator to prevent interference with operation or reliability of the dial indicator.

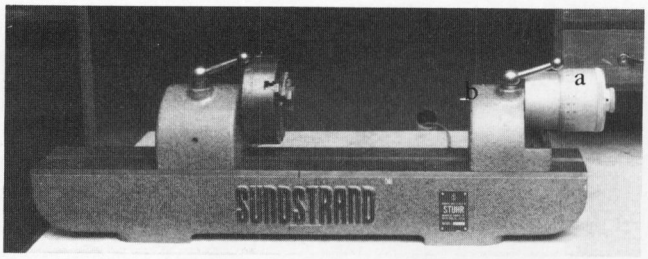

(a) Micrometer fixture. a) micrometer head, and b) spindle.

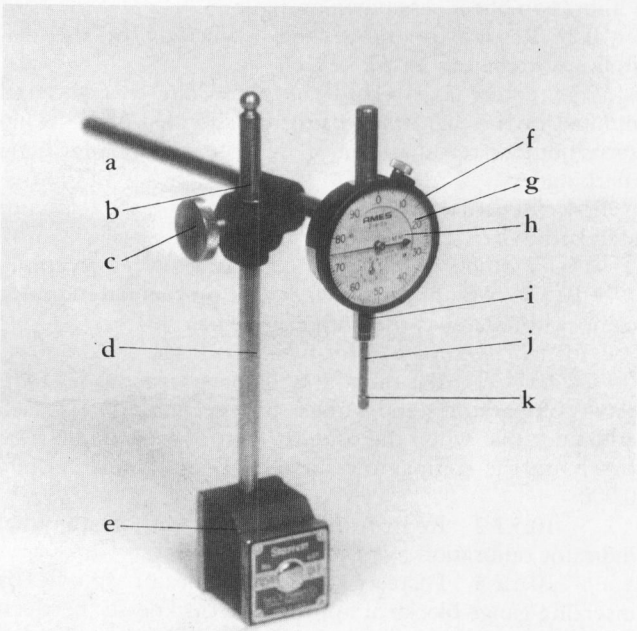

(b) Magnetic base dial indicator holder. a) gauge rod, b) swivel snug, c) dial indicator clamp, d) post, e) magnetic base, f) case, g) dial face, h) hand, i) spindle, j) stem, and k) contact point.

Figure 2. – Dial indicator calibration equipment (method B).

7.2.4 Dial indicators are to be stored in a suitable box or case when not in use.

8. Calibration and Standardization

8.1 Verify that gauge blocks used for obtaining dial indicator comparison readings (method A) are currently calibrated in accordance with USBR 1000. If the gauge block calibration is not current, perform the calibration before using the gauge blocks for this procedure.

8.2 Verify that the micrometer fixture has been currently calibrated by the manufacturer. If the calibration is not current, perform the calibration before using the micrometer fixture (method B) for this procedure.

9. Conditioning

9.1 Perform this calibration in an environment as close to 68 °F (20 °C) as possible.

9.2 The dial indicator, calibration gauge blocks, and dial indicator comparator stand and base should be in the environment in which they are to be calibrated for at least 24 hours prior to calibration.

10. Procedure

10.1 All data are to be recorded on the "Dial Indicator Calibration Sheet" as shown on figure 3.

10.2 Record the range and graduation of the dial indicator to be calibrated.

10.3 Locate and record the manufacturer and serial number of the dial indicator to be calibrated. If it has no serial number, record the model number and any identifying marking.

10.4 Record the type and serial number of the reference standard to be used.

10.5 *Method A — Precision Gauge Block Calibration*:

10.5.1 Mount the dial indicator on the dial indicator comparator stand as shown on figure 4a.

10.5.2 *Accuracy Determination*:

10.5.2.1 Position the dial indicator on the dial indicator comparator stand. Adjust the dial indicator in such a manner that when the contact point of the spindle rests firmly on the comparator stand base, the hand registers 0.000.

10.5.2.2 Record the zero reading on the dial indicator calibration form.

10.5.2.3 Displace the dial indicator spindle by inserting gauge blocks of appropriate thicknesses between the comparator base and the contact point of the dial indicator as shown on figure 4b. These gauge blocks should be of such thickness that the hand can be displaced in approximately equal increments (a minimum of four increments per revolution of the dial indicator hand) over the entire range of the dial. Record the gauge block(s) used (reference standard length) and the dial indicator reading at each increment. Record the dial indicator readings to the highest readability possible—based on smallest graduation of the dial indicator dial.

10.5.3 *Hysteresis Determination*:

10.5.3.1 Displace the spindle of the dial indicator by inserting the same gauge blocks as used in subparagraph 10.5.2.3. This time insert the gauge blocks in reverse order; i.e., thickest block to thinnest.

10.5.3.2 Read and record dial indicator readings for each gauge block used.

10.5.4 *Repeatability Determination*:

10.5.4.1 Remove all gauge blocks from beneath the contact point. Readjust the dial indicator on the support column so that the hand registers 0.000 with the contact point resting on the comparator base and record the value.

10.5.4.2 Rotate the hand of the dial indicator by displacing the dial indicator spindle using an appropriate size (or combination of) gauge block(s). (See subpar. 10.5.4.6.)

10.5.4.3 Read and record the dial gauge reading and the gauge block(s) used.

10.5.4.4 Remove the gauge block(s) and record the dial indicator reading.

10.5.4.5 Repeat subparagraphs 10.5.4.1 through 10.5.4.4 a minimum of three times.

10.5.4.6 Subparagraph 10.5.4 should be followed at approximately 25, 50, and 75 percent of full range of the dial indicator.

10.6 *Method B — Micrometer Fixture Calibration*:

10.6.1 Mount the dial indicator on the bench of the micrometer fixture utilizing the magnetic base dial indicator holder as shown on figure 5.

10.6.2 *Accuracy Determination*:

10.6.2.1 Displace the dial indicator spindle so the indicator hand registers 0.000 by turning the micrometer head.

10.6.2.2 Set the micrometer head to read 0.000.

10.6.2.3 Read and record the zero readings on the dial indicator calibration form.

10.6.2.4 Displace the dial indicator spindle by turning the micrometer head in equal increments (a minimum of four increments per revolution of the dial indicator hand) over the entire range of the dial. Read and record the readings of both the dial indicator and the micrometer fixture at each increment. Record the dial indicator readings to the highest readability possible—based on smallest graduation of the dial indicator hand.

10.6.3 *Hysteresis Determination*:

10.6.3.1 Displace the spindle of the dial indicator by turning the micrometer head in the opposite direction to that used in subparagraph 10.6.2.1.

10.6.3.2 Read and record dial indicator and micrometer fixture readings at the same increments as performed in subparagraph 10.6.2.4.

10.6.4 *Repeatability Determination*:

10.6.4.1 Adjust both the dial indicator and the micrometer fixture to read 0.000.

10.6.4.2 Displace the spindle of the dial indicator by turning the micrometer fixture to cause the appropriate revolution of the dial indicator hand. (See subpar. 10.6.4.8.)

10.6.4.3 Turn the micrometer fixture head to read 0.000.

10.6.4.4 Read and record the micrometer reading and corresponding dial indicator reading.

10.6.4.5 Turn the micrometer fixture head to return the micrometer back to zero.

10.6.4.6 Read and record the micrometer reading and corresponding dial indicator reading.

10.6.4.7 Repeat subparagraphs 10.6.4.1 through 10.6.4.6 a minimum of three times.

10.6.4.8 Subparagraph 10.6.4 should be followed at approximately 25, 50, and 75 percent of full range of the dial indicator.

11. Calculations

11.1 Calculations for determining the accuracy, hysteresis, and repeatability of the dial indicator are as shown on the "Dial Indicator Calibration Sheet" (fig. 3).

7-2349 (5-86) Bureau of Reclamation	DIAL INDICATOR CALIBRATION SHEET	Designation USBR 1007-89

DIAL INDICATOR RANGE/ GRADUATIONS 0-1.000 inch / 0.001 inch

MANUFACTURER Example SERIAL NO. DI-115281

REFERENCE STANDARD USED: ☐ GAUGE BLOCKS SERIAL NO. MF-100

☒ MICROMETER FIXTURE SERIAL NO. _____

CALIBRATION PERFORMED BY _____ DATE _____

CALIBRATION CHECKED BY _____ DATE _____

ACCURACY				HYSTERESIS				REPEATABILITY			
TRIAL NO.	REFERENCE STANDARD LENGTH	DIAL INDICATOR READINGS	DIFFERENCE (2) - (3)	TRIAL NO.	REFERENCE STANDARD LENGTH	DIAL INDICATOR READING	HYSTERESIS (3) - (7)	BASE DIAL READING	RETRACTED READING	RETURN READING	REPEATABILITY
(1)	(2)	(3)	(4)	(5)	(6)	(7)	(8)	(9)	(10)	(11)	(9) - (11)
1	0.000	0.000	0.000	89	.0.000	0.000	0.000	———	1/2 REVOLUTION	———	
2	0.025	0.025	0.000	88	0.025	0.024	0.001				
3	0.050	0.050	0.000	87	0.050	0.050	0.000	0.000	0.050	0.000	0.000
4	0.075	0.075	0.000	86	0.075	0.074	0.001	0.000	0.050	0.000	0.000
5	0.100	0.100	0.000	85	0.100	0.100	0.000	0.000	0.050	0.000	0.000
6	0.125	0.125	0.000	84	0.125	0.125	0.000				
7	0.150	0.150	0.000	83	0.150	0.150	0.000	———	2 1/2 REVOLUTIONS	———	
8	0.175	0.175	0.000	82	0.175	0.175	0.000				
9	0.200	0.200	0.000	81	0.200	0.199	0.001	0.000	0.250	0.000	0.000
								0.000	0.250	0.000	0.000
								0.000	0.250	0.000	0.000

ACCURACY: ACCEPT ☒ HYSTERESIS: ACCEPT ☒ REPEATABILITY: ACCEPT ☒

REJECT ☐ REJECT ☐ REJECT ☐

REMARKS: Only partial calibration data shown.

GPO 850-947

Figure 3. – Dial indicator calibration sheet — example.

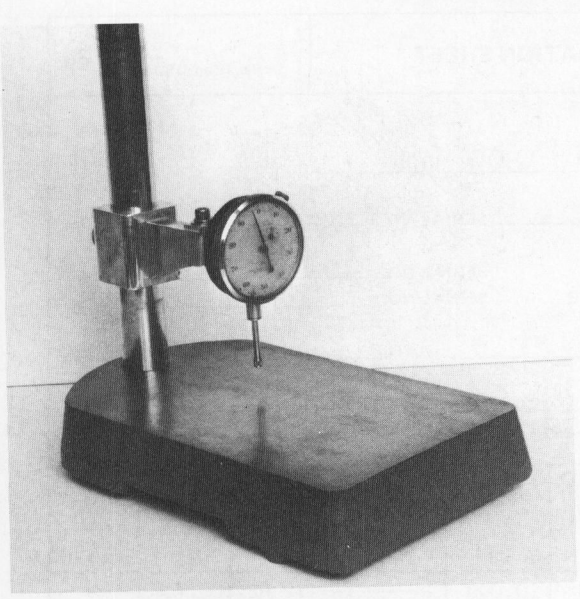

(a) Dial indicator mounted to comparator stand.

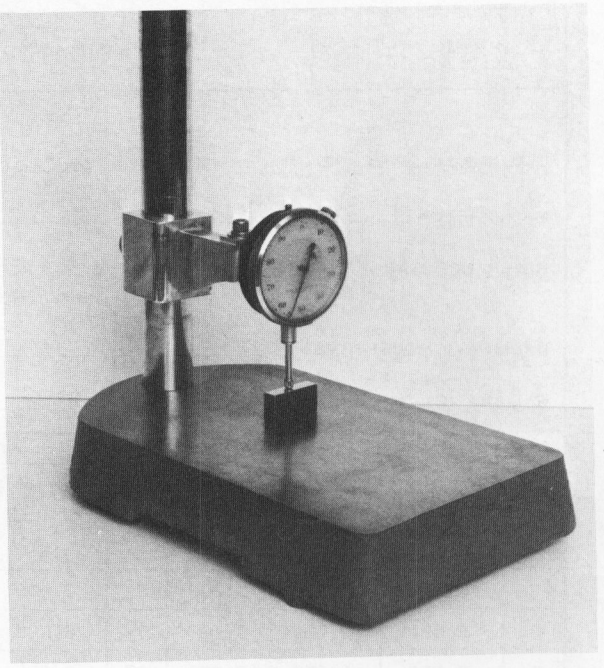

(b) Displacement of dial indicator with gauge block.

Figure 4. – Dial indicator calibration assembly (method A).

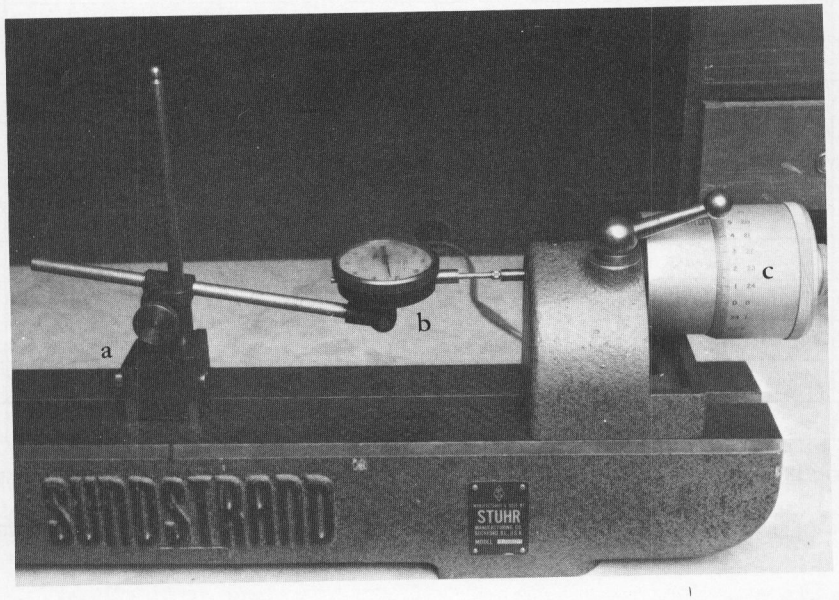

Figure 5. – Dial indicator calibration assembly (method B). (a) magnetic base dial indicator holder, (b) dial indicator, and (c) micrometer head.

12. Interpretation of Results

12.1 Table 1 shows maximum allowable deviation and is to be used to evaluate the acceptability of the dial indicator.

12.2 If deviation of the dial indicator exceeds the limits listed in table 1 for repeatability, hysteresis, or accuracy, the dial indicator must be rejected.

13. Report

13.1 The report is to consist of a completed and checked "Dial Indicator Calibration Sheet" (fig. 3). This information is to be filed with the laboratory equipment calibration records.

13.2 All calculations are to show a checkmark.

Table 1. – Dial indicator maximum deviation.

Smallest graduation inch	Smallest graduation mm	Repeatability	Hysteresis	Accuracy First 2-1/3 revolutions	Accuracy First 10 revolutions	Accuracy First 20* revolutions
		Deviation in units of smallest graduation				
0.00005	0.001	±0.2	0.50	±1	±4	
.00010	.002	±0.2	.50	±1	±3	±4
.00050	.010	±0.2	.33	±1	±3	±4
.00100	.020	±0.2	.33	±1	±2	±4

* Over 20 revolutions consult with individual manufacturers for standard procedure.
Table 1 taken from ANSI B 89.1.10-1978 dial indicators for linear measurements.

UNITED STATES DEPARTMENT OF THE INTERIOR
BUREAU OF RECLAMATION

USBR 1008-89

PROCEDURE FOR

CALIBRATING LINEAR VARIABLE DIFFERENTIAL TRANSFORMERS

INTRODUCTION

This procedure is under the jurisdiction of the Geotechnical Services Branch, code D-3760, Research and Laboratory Services Division, Denver Office, Denver, Colorado. The procedure is issued under the fixed designation USBR 1008. The number immediately following the designation indicates the year of acceptance or the year of last revision.

1. Scope

1.1 This designation outlines the procedure for calibrating LVDTs (linear variable differential transformers).

1.2 Method A outlines the calibration procedure using precision gauge blocks; method B outlines the calibration procedure incorporating a micrometer fixture.

2. Applicable Documents

2.1 *USBR Procedure*:
USBR 1000 Standards for Linear Measurement Devices
USBR 3900 Standard Definitions of Terms and Symbols Relating to Soil Mechanics

2.2. *Federal Specification*:
GGG-G-15C Gage Blocks and Accessories

3. Summary of Method

3.1 Readings from an LVDT and from either the precision gauge blocks (method A) or the micrometer fixture (method B) are compared to determine the linearity and repeatability of the LVDT. The results are used to determine the acceptability of the LVDT for laboratory use.

4. Significance and Use

4.1 LVDTs must be calibrated for use in the laboratory to ensure reliable linear measurements.

4.2 Calibrate LVDTs before initial use and at least annually thereafter.

5. Terminology (see fig.1)

5.1 Definitions are in accordance with USBR 3900.

5.2 Terms not included in USBR 3900 specific to this designation are:

5.2.1 *Null Position.*–The LVDT core position within the LVDT body that voltage output is zero.

5.2.2 *TLR* (total linear range).–Total distance that may be traveled by the LVDT core in moving from the position of maximum voltage output at one end of the body—through the null position—to the position of maximum voltage output at the opposite end of the body.

5.2.3 *Full-Scale Displacement.*–Total distance traveled by the core in moving from the null position to one end of the total linear range; i.e., one-half of the total linear range.

5.2.4 *Range.*–Total distance traveled by the core expressed in terms of percent plus or minus full-scale displacement.

5.2.5 *Repeatability.*–The degree of LVDT measurement variation for successive measurements of the same reference standard.

5.2.6 *Linearity.*–The variation of LVDT measurements from a straight line. The measurements are obtained using a series of reference standards applied over the total linear range of the LVDT.

5.2.7 *Percent Error.*–The ratio (expressed as a percent) of (1) the difference between an LVDT measurement of a reference standard and the actual length of the reference standard to (2) the total linear range of the LVDT. Percent error also may be determined over a fraction of the total linear range.

5.2.8 *Voltage Error.*–The difference in LVDT voltage output for successive measurements of the same reference standard.

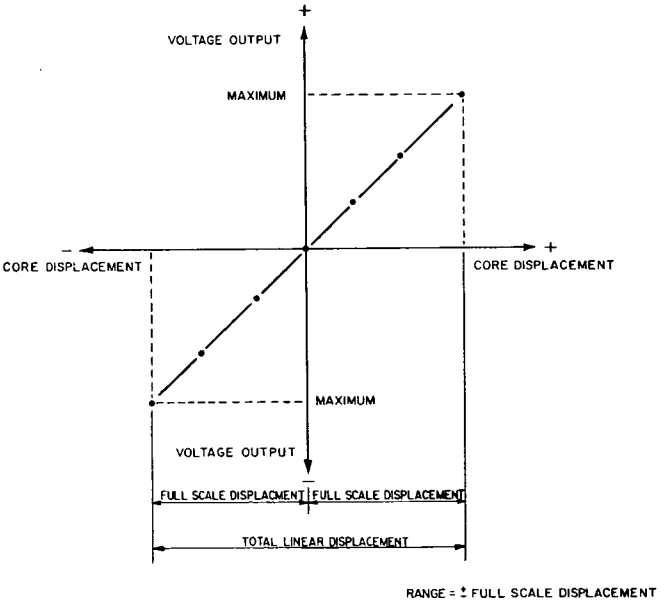

Figure 1. – Terminology of the LVDT.

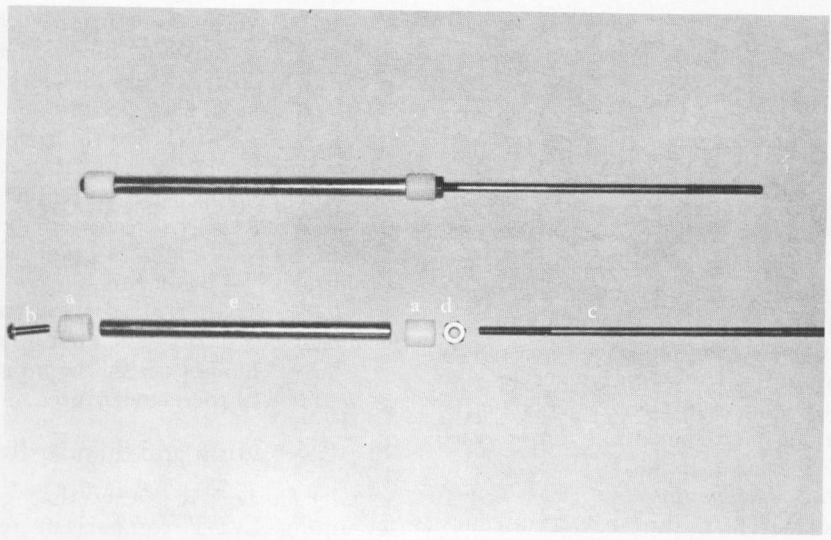

(a) LVDT core/core extension rod assembly. a) teflon guide, b) No. 6-40 UNF threaded screw, c) LVDT core extension rod, d) lock nut, and e) LVDT core.

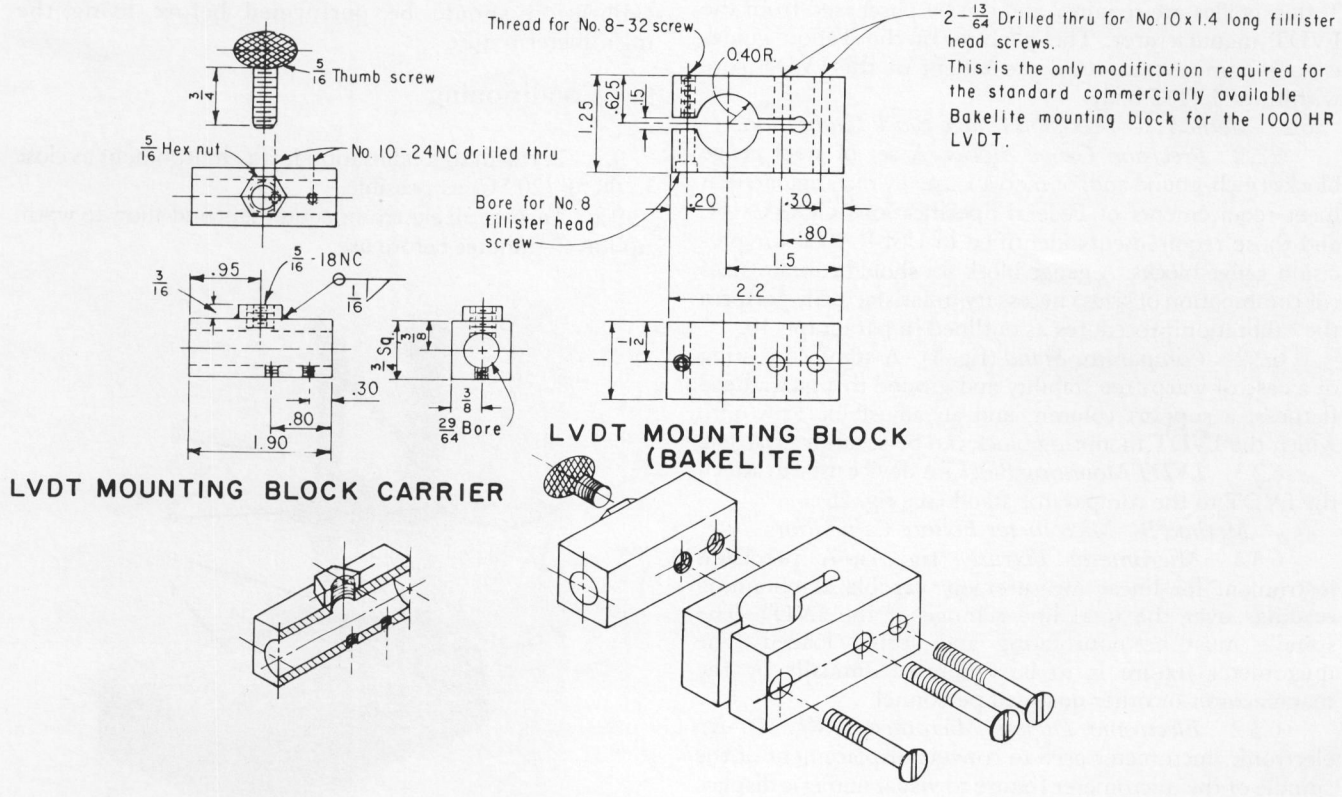

(b) Schematic of LVDT mounting block.

Figure 2. – LVDT mounting block and rod assembly.

6. Apparatus

6.1 *General Apparatus*:

6.1.1 *LVDT.*–An electrical transducer which converts linear displacement to electrical output. An LVDT (linear variable differential transformer) consists of a stationary LVDT body and a movable LVDT core. The LVDT core is threaded on both ends so the LVDT core extension rods can be attached.

6.1.2 *Signal Conditioner and Readout Equipment.*–A signal conditioner provides excitation voltage for the LVDT, as well as appropriate electronic circuitry to make the output of the transducer (LVDT) compatible with readout equipment. Readout equipment accepts output from the signal conditioner and converts it into a visual display of transducer displacement.

6.1.3 *LVDT Core Extension Rod* (fig. 2a).–A nonmagnetic rod (preferably brass), threaded on both ends. The diameter of the rod and threads must be compatible with the diameter of the hole in the LVDT core. The rod should be threaded a minimum of 1 inch (25 mm) at each end with an approximate total length of 2-1/2 inches (65 mm).

6.1.4 *LVDT Teflon Guides* (fig. 2a).–Two LVDT Teflon guides are required and can be purchased from the LVDT manufacturer. The purpose of the Teflon guides is to minimize transverse movement of the LVDT core within the LVDT body.

6.2 *Method A—Precision Gauge Block Calibration*:

6.2.1 *Precision Gauge Blocks.*–A set of steel gauge blocks (inch-pound and/or metric), usually rectangular, that meet requirements of Federal Specifications GGG-G-15C and those requirements identified in USBR 1000 for precision gauge blocks. A gauge block set should contain sizes (or combination of sizes) necessary to satisfactorily perform the calibration procedures as outlined in paragraph 10.

6.2.2 *Comparator Stand* (fig. 3).–A stand consisting of a base of warp-free stability and ground to a guaranteed flatness; a support column; and an adjustable arm onto which the LVDT mounting block can be securely attached.

6.2.3 *LVDT Mounting Block.*–A device used to attach the LVDT to the comparator stand (see fig. 2b).

6.3 *Method B—Micrometer Fixture Calibration*:

6.3.1 *Micrometer Fixture* (fig. 4).–A precision instrument for linear measurement capable of obtaining readings over the total linear range of the LVDT. The spindle must be nonrotating and spring loaded. The micrometer fixture is to be calibrated annually by the manufacturer or other qualified personnel.

6.3.2 *Electronic Digital Micrometer* (fig. 4).–An electronic micrometer used to convert displacement of the spindle of the micrometer fixture to visual numeric display.

7. Precautions

7.1 *Safety Precautions*:

7.1.1 The LVDT body should be examined for burrs and/or sharp edges.

7.1.2 Verify all electrical wiring is connected properly, and that the signal conditioner (if used) is grounded properly to prevent electrical shock to the operator.

7.2 *Technical Precautions*:

7.2.1 The LVDT core and body are a matched set as purchased from the manufacturer; for best performance, do not interchange cores with other LVDT bodies.

7.2.2 Replace the core and body if either shows any sign of dents, bending, or other defects which may affect performance of the device.

7.2.3 The LVDT core and body should be stored in a suitable box or case when not in use.

7.2.4 Do not exceed the input voltage of the LVDT as specified by the manufacturer.

8. Calibration and Standardization

8.1 *Method A.*–Verify that gauge blocks used for obtaining LVDT comparison readings are currently calibrated in accordance with USBR 1000. If the gauge block calibration is not current, the calibration procedure should be performed before using the gauge blocks.

8.2 *Method B.*–Verify that the micrometer fixture has been currently calibrated by the manufacturer or other qualified personnel. If the calibration is not current, the calibration should be performed before using the micrometer fixture.

9. Conditioning

9.1 Perform this calibration in an environment as close to 68 °F (20 °C) as possible.

9.2 Turn on all electronic equipment and allow to warm up for 30 minutes before use.

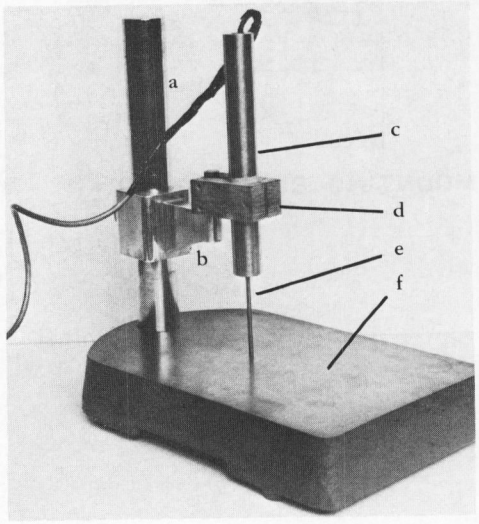

Figure 3. – LVDT Comparator stand and LVDT mounting block (method A). a) support column, b) adjustable arm, c) LVDT body, d) LVDT mounting block, e) LVDT core extension rod, and f) base.

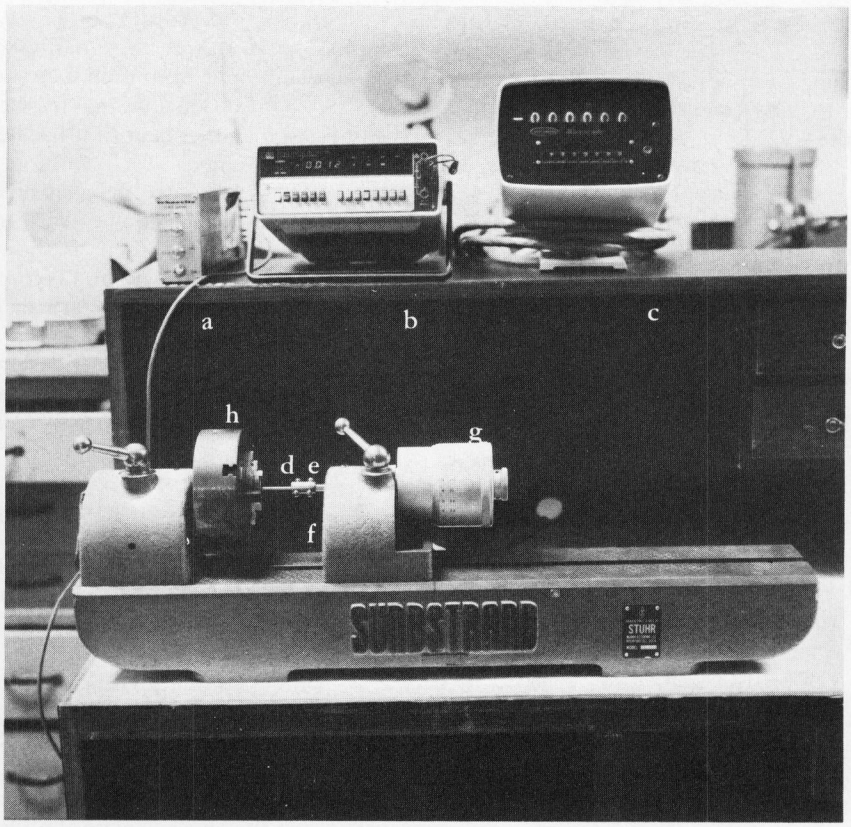

Figure 4. – LVDT Calibration assembly—micrometer fixture (method B). a) signal conditioner, b) readout equipment, c) electronic digital micrometer, d) LVDT core extension rod, e) spindle, f) micrometer head carrier, g) micrometer head, and h) chuck.

9.3 The LVDT, calibration gauge blocks, micrometer fixture, and comparator stand should be in the environment in which they are to be calibrated for at least 24 hours prior to calibration.

10. Procedure

10.1 All data are to be recorded on the "Linear Variable Differential Transformer Calibration" form as shown on figure 5.

10.2 Record type and serial number of the LVDT to be calibrated; if it has no serial number, record the model number and any other identifying markings.

10.3 Record the total linear range of the LVDT.

10.4 Record the type and serial number of the reference standard used.

10.5 Attach the cable from the LVDT to the signal conditioner; and attach the cable from the signal conditioner output to the readout equipment. Plug in the readout equipment to a power source and allow a minimum 30-minute warmup.

10.6 Slide an LVDT Teflon guide onto each end of the LVDT core as shown on figure 2a.

10.7 Attach the LVDT core extension rod to the end of the LVDT core by screwing the LVDT core extension rod into the threaded LVDT core.

10.8 *Method A—Precision Gauge Block Calibration*:

10.8.1 *Null Position of LVDT*:

10.8.1.1 Attach the LVDT mounting block to the adjustable arm of the comparator stand as shown on figure 3.

10.8.1.2 Slide the LVDT core and core extension rod assembly into the LVDT body.

10.8.1.3 Place the LVDT body into the LVDT mounting block and tighten the appropriate screw on the mounting block. (DO NOT overtighten the screw on the mounting block; this can deform the LVDT body.)

10.8.1.4 Apply voltage to the LVDT. Ensure that the line voltage is compatible with the power requirements of the signal conditioner. Refer to the manufacturer's operating instructions for voltage requirements.

10.8.1.5 Place a gauge block (or series of blocks) which has a height equal to one-half the total linear range of the LVDT under the LVDT core extension rod; i.e. for an LVDT having a 2-inch (50.8-mm) total linear range, a 1-inch (25.4-mm) gauge block is used.

10.8.1.6 Using the adjustable arm, adjust the LVDT body up or down on the comparator stand support column as necessary so the output of the readout equipment is approximately equal to 0 volt.

10.8.1.7 Secure the adjustable arm on the support column of the comparator stand in the position described

in subparagraph 10.8.1.6, by tightening the screw of the adjustable arm.

10.8.1.8 Use the ZERO adjustment on the signal conditioner to obtain a reading of exactly 0.000 volt. This is the null position of the LVDT.

NOTE 1.–Adjustment of the signal conditioner may vary slightly depending on the type of signal conditioner used. Refer to the manufacturer's operating instructions for adjustment of the specific signal conditioner used.

10.8.2 *Signal Conditioner Span Setting* (LVDT factor determination):

10.8.2.1 Remove the gauge block (or series of blocks) from beneath the LVDT core extension rod.

10.8.2.2 Place a gauge block (or series of blocks) which has a height equal to the total linear range of the LVDT (as recorded in subpar. 10.3) under the core extension rod; i.e., for an LVDT with a 2-inch (50.8-mm) total linear range, a 2-inch gauge block is used.

10.8.2.3 Adjust the signal conditioner, using the GAIN control screw, so that the output of the LVDT is equal to ±10.000 volts d.c. (Polarity depends on the wiring of the LVDT.)

NOTE 2.–For convenience, subparagraph 10.8.2.3 specifies a setting of ±10.000 volts d.c. for the LVDT output at full-scale displacement. Other values of output at full LVDT displacement may be used, if desired.

10.8.2.4 Remove the gauge block (or series of gauge blocks) from beneath the core extension rod and replace it with a gauge block (or series of gauge blocks) having a height equal to one-half the total linear range of the LVDT. The readout should indicate 0.000 volt; if it does not, reset by adjusting the ZERO adjustment.

10.8.2.5 Repeat subparagraphs 10.8.2.2 through 10.8.2.4 until values of 0.000 and ±10.000 (see note 2) volts are obtained.

10.8.2.6 Record the value of LVDT output at full-scale displacement ±10.000 volts (see note 2) as "LVDT output 1" as shown on figure 5.

10.8.2.7 Remove the gauge block (or series of gauge blocks) from beneath the LVDT core extension rod and allow the LVDT core extension rod to rest on the comparator stand base.

10.8.2.8 Record the LVDT output obtained as "LVDT output 2" as shown on figure 5.

10.8.2.9 Calculate and record the LVDT output change and the "LVDT factor" as shown on figure 5.

10.8.3 *Linearity of the LVDT*:

10.8.3.1 Select appropriate displacement increments (gauge blocks) to displace the LVDT core through its total linear range. It is recommended that the gauge blocks be selected such that a minimum of four readings—equally spaced throughout the LVDT total linear range—are used.

10.8.3.2 Raise the LVDT core extension rod, and place the appropriate gauge block(s) on the comparator stand base beneath the LVDT core extension rod.

10.8.3.3 Record the gauge block(s) height in column 1 and the corresponding output of the LVDT readout equipment in column 2 as shown on figure 5.

10.8.3.4 Continue to displace the LVDT core at the selected increments until it has been displaced through its total linear range.

10.8.3.5 Record the gauge block(s) height and the corresponding output of the LVDT readout equipment at each displacement increment as shown on figure 5.

10.8.3.6 Calculate and record values of percent of TLR and percent error for each displacement increment as shown on figure 5.

10.8.3.7 Check the linearity of the LVDT in accordance with provisions in subparagraph 12.1.

10.8.4 *Repeatability of the LVDT*:

10.8.4.1 Remove the gauge block(s) from beneath the LVDT core extension rod.

10.8.4.2 Repeat subparagraphs 10.8.3.2 through 10.8.3.5 using the same displacement increments (gauge blocks) selected in subparagraph 10.8.3.1.

10.8.4.3 Calculate and record the voltage error at each corresponding displacement increment as shown on figure 5.

10.8.4.4 Check repeatability of the LVDT in accordance with provisions in subparagraph 12.2.

10.9 *Method B—Micrometer Fixture Calibration*:

10.9.1 Secure the LVDT body into the chuck of the micrometer fixture as shown on figure 4. (DO NOT overtighten the chuck around the LVDT body.)

10.9.2 Slide the LVDT core with the Teflon guides and core extension rod assembly into the LVDT body.

10.9.3 Attach the LVDT core extension rod to the spindle of the micrometer head carrier using an appropriate attachment assembly as shown on figure 4.

10.9.4 Apply voltage to the LVDT. Ensure that the line voltage is compatible with the power requirements of the signal conditioner. Refer to the manufacturer's operating instructions for voltage requirements.

10.9.5 Ensure that the signal conditioner has had a minimum 30-minute warmup time.

10.9.6 *Null Position of LVDT*:

10.9.6.1 Turn the GAIN control of the signal conditioner (see note 1) to the minimum gain setting.

10.9.6.2 Adjust the ZERO control of the signal conditioner to achieve an output of zero volt.

10.9.6.3 Turn GAIN control to approximately the midpoint position.

10.9.6.4 Remove the LVDT core by sliding the micrometer head carrier along the bed of the micrometer fixture until the output is approximately 0 volt. Tighten the micrometer head carrier to the bed of the micrometer fixture.

10.9.6.5 Rotate the micrometer head to achieve a reading of exactly 0.000 volt. This is the null position of the LVDT.

10.9.7 *Signal Conditioner Span Setting* (LVDT factor determination):

10.9.7.1 Reset the electronic digital micrometer to read 0.000.

10.9.7.2 Rotate the micrometer head until the LVDT core has been displaced a distance equal to one-half the total linear range of the LVDT; i.e. for an LVDT having a 2-inch (50.8-mm) total linear range, the digital micrometer should read ±1.000 inch (25.4 mm). Record the value of LVDT output achieved as "LVDT output 1."

10.9.7.3 Adjust the signal conditioner, using the GAIN control screw, so the output of the LVDT readout equipment is equal to ±10.000 volts d.c. (see note 2). Polarity depends on the wiring of the LVDT.

10.9.7.4 Rotate the micrometer head in the opposite direction until the electronic digital micrometer reads 0.000 volt. The readout equipment should indicate 0.000 volt; if it does not, reset by adjusting the ZERO adjustment.

10.9.7.5 Repeat subparagraphs 10.9.7.2 through 10.9.7.4 until values of 0.000 and ±10.000 volts (see note 2) are obtained.

10.9.7.6 Rotate the micrometer head until the electronic digital micrometer indicates the LVDT has been displaced a distance equal to one-half the total linear range of the LVDT. (This is to be equal displacement but opposite direction as that achieved in subpar. 10.9.7.2.)

10.9.7.7 Record the LVDT output obtained as "LVDT output 2."

10.9.7.8 Calculate and record the LVDT output change and the "LVDT factor."

10.9.8 *Linearity of the LVDT*:

10.9.8.1 Select appropriate displacement increments to displace the LVDT core through its total linear range. It is recommended that the displacement increments be selected such that a minimum of four readings—equally spaced throughout the LVDT range—are used.

10.9.8.2 Rotate the micrometer head until the electronic digital micrometer output corresponds to the desired displacement increment.

10.9.8.3 Read and record the digital micrometer output and corresponding LVDT output voltage.

10.9.8.4 Continue to displace the LVDT by rotating the micrometer head to the selected increments until the LVDT core has been displaced through its total linear range.

10.9.8.5 Record the LVDT displacement as indicated by the digital micrometer and the corresponding voltage output at each displacement increment.

10.9.8.6 Calculate and record values of percent of TLR and percent error for each displacement increment.

10.9.8.7 Check the linearity of the LVDT in accordance with provisions of subparagraph 12.1.

10.9.9 *Repeatability of the LVDT*:

10.9.9.1 Rotate the micrometer head until the digital micrometer reads 0.000 volt.

10.9.9.2 Repeat subparagraphs 10.9.8.2 through 10.9.8.5 using the same displacement increments selected in subparagraph 10.9.8.1.

10.9.9.3 Calculate and record the voltage error at each corresponding displacement increment as shown on figure 5.

10.9.9.4 Check repeatability of the LVDT in accordance with provisions in subparagraph 12.2.

11. Calculations

11.1 Calculations are as shown on the "Linear Variable Differential Transformer Calibration" form. (fig. 5).

12. Interpretation of Results

12.1 *Linearity.*–Table 1 is to be used for evaluation of LVDT linearity.

12.1.2 If percent error, at the listed percent of total linear range, exceeds the amount listed in table 1 the LVDT should be rejected.

12.2 Repeatability.–The voltage error should not exceed ±0.05 volt at any displacement. If the voltage error (col. 8, fig. 5) exceeds ±0.05 volt, the LVDT should be rejected.

13. Report

13.1 The report is to consist of a completed and checked "Linear Variable Differential Transformer Calibration" form (fig. 5).

13.2 All calculations are to show a checkmark.

14. Background Reference

"Handbook of Measurement and Control," *Handbook HB-76*, copyright 1976 by Schaevitz Engineering, Pennsauken, NJ, Library of Congress Catalog No. 76-24971.

Table 1. – LVDT percent error tolerances.

Total linear range		Range, plus or minus		Allowable percent error over indicated percent of total linear range, %		
in	mm	in	mm	50	75	100
0.10	2.5	0.050	1.25	0.10	0.25	2.00
0.20	5	0.100	2.5	.10	.25	2.00
0.40	10	0.200	5.0	.10	.25	2.00
0.60	15	0.300	7.5	.10	.25	2.00
0.80	20	0.400	10	.15	.25	2.00
1.00	25	0.500	12.5	.15	.25	2.00
2.00	50	1.000	25	.25	.25	2.00
4.00	100	2.000	50	.25	.25	2.00
6.00	150	3.000	75	.15	.25	2.00
8.00	200	4.000	100	.15	.25	2.00
10.00	250	5.000	125	.15	.25	2.00
20.00	500	10.000	250	.15	.25	2.00

7-2347 (5-86) Bureau of Reclamation	**LINEAR VARIABLE DIFFERENTIAL TRANSFORMER CALIBRATION**	Designation USBR 1008-89

LVDT TYPE HR 1000 MANUFACTURER Example SERIAL NO. 15

REFERENCE STANDARD USED: ☒ GAUGE BLOCKS SERIAL NO. GB112
☐ MICROMETER FIXTURE SERIAL NO. _____

CALIBRATION PERFORMED BY _____ DATE _____

CALIBRATION CHECKED BY _____ DATE _____

LVDT FACTOR DETERMINATION

(a) LVDT TOTAL LINEAR RANGE (TLR)	2.000	☒ in ☐ mm
(b) LVDT OUTPUT 1	10.000	V
(c) LVDT OUTPUT 2	-9.978	V
(d) LVDT OUTPUT CHANGE (b) - (c)	19.978	V
(e) LVDT FACTOR (a)/(d)	0.100	☒ in/V ☐ mm/V

LINEARITY

TRIAL NO.	REFERENCE STANDARD LENGTH ☒ in ☐ mm (1)	PERCENT OF TLR (%)	LVDT OUTPUT (VOLTS) (2)	CHANGE IN LVDT OUTPUT (3) = (2) - (c) (VOLTS) (3)	LVDT MEASUREMENT (4) = (3) x (e) ☒ in ☐ mm (4)	PERCENT ERROR (5) = $\frac{(1)-(4)}{(a)} \times 100$ (5)
1	0	0	-9.978	0	0	0
2	0.250	12.5	-7.480	2.498	0.2498	0.010
3	0.500	25	-4.982	4.996	0.4996	0.020
4	0.750	37.5	-2.483	7.495	0.7495	0.025
5	1.000	50	0.000	9.978	0.9978	0.110
6	1.250	62.5	2.525	12.503	1.2503	-0.015
7	1.500	75	5.037	15.015	1.5015	-0.075
8	1.750	87.5	7.533	17.511	1.7511	-0.055
9	2.000	100	10.000	19.978	1.9978	0.110

REPEATABILITY

TRIAL NO.	REFERENCE STANDARD LENGTH ☒ in ☐ mm (6)	PERCENT OF TLR (%)	LVDT OUTPUT (VOLTS) (7)	VOLTAGE ERROR (8) = (7) - (2) (VOLTS) (8)
1	0	0	-9.976	0.002
2	0.250	12.5	-7.519	-0.039
3	0.500	25	-5.003	-0.021
4	0.750	37.5	-2.522	0.039
5	1.000	50	0.000	0.000
6	1.250	62.5	2.532	0.007
7	1.500	75	5.040	0.003
8	1.750	87.5	7.531	-0.002
9	2.000	100	10.000	0.000

LINEARITY ☒ ACCEPT ☐ REJECT

REPEATABILITY ☒ ACCEPT ☐ REJECT

REMARKS _____

GPO 850 - 945

Figure 5. - Linear variable differential transformer calibration — example.

UNITED STATES DEPARTMENT OF THE INTERIOR
BUREAU OF RECLAMATION

USBR 1009-89

PROCEDURE FOR

CALIBRATING COMPACTION MOLDS

INTRODUCTION

This procedure is under the jurisdiction of the Geotechnical Services Branch, code D-3760, Research and Laboratory Services Division, Denver Office, Denver, Colorado. The procedure is issued under the fixed designation USBR 1009. The number immediately following the designation indicates the year of acceptance or the year of last revision.

1. Scope

1.1 This designation outlines the procedure for calibrating molds used for performing laboratory compaction of soils.

1.2 Calibration consists of determining the volume of the mold.

1.3 The volume is determined by a water-filling method and checked by a linear-measurement method.

2. Applicable Documents

2.1 *USBR Procedures*:

USBR 1000 Standards for Linear Measurement Devices
USBR 1012 Calibrating Balances or Scales
USBR 3900 Standard Definitions of Terms and Symbols Relating to Soil Mechanics
USBR 5500 Performing Laboratory Compaction of Soils—5.5-lbm Rammer and 18-inch Drop

2.2 *ASTM Standard*:

E 1 ASTM Thermometers

3. Summary of Methods

3.1 *Volume by Water-Filling.*–A laboratory compaction mold is completely filled with water. The mass of water required to fill the mold is obtained, the absolute density of water determined and, from these values, the volume of the compaction mold is calculated.

3.2 *Volume by Linear-Measurement.*–Measurements of the inside diameter and height of a laboratory compaction mold are carefully obtained. The volume of the compaction mold is calculated using these values. The calculated volume is compared to the volume determined in subparagraph 3.1.

4. Significance and Use

4.1 Compaction molds are used to determine the unit weight of compacted soil specimens in a laboratory compaction test. Periodic calibrations of the molds must be performed to ensure reliable unit weight determinations.

4.2 This calibration procedure is to be performed upon receipt of the compaction mold, annually after receipt, before reuse after anything occurs which may affect the volume of the mold, or whenever test results are questionable.

5. Terminology

5.1 Definitions are in accordance with USBR 3900.

6. Apparatus

6.1 *Balance or Scale.*–Typical balance or scale used for this designation are:

Application	*Readable to*	*Approximate capacity*
Inch-pound units	0.01 lbm	50 lbm
SI units	1 g	20 kg

6.2 *Mold.*–A compaction mold conforming to the requirements of figure 1.

NOTE 1.–There are several varieties of molds that are commercially available or that may be fabricated. Figure 1 is typical. Critical requirements are the tapered design, the inside diameters, and the height.

6.3 *Vernier or Dial Caliper.*–For inch-pound applications, a vernier or dial caliper having a measuring range of at least 0 to 6 inches and readable to at least 0.001 inch. For metric applications, a vernier or dial caliper having a measuring range of at least 0 to 150 mm and readable to at least 0.02 mm.

6.4 *Depth Micrometer.*–For inch-pound applications, a depth micrometer having a measuring range of at least 0 to 10 inches and readable to at least 0.001 inch. For metric applications, a depth micrometer having a measuring range of at least 0 to 250 mm and readable to at least 0.02 mm.

6.5 *Inside Micrometer.*–For inch-pound applications, an inside micrometer having a measuring range of at least 2 to 12 inches and readable to at least 0.001 inch. For metric applications, an inside micrometer having a measuring range of at least 50 to 300 mm and readable to at least 0.02 mm.

6.6 *Plastic or Glass Plates.*–One pair of plastic or glass plates, about 8 by 8 inches by 1/4 inch (200 by 200 by 6 mm) thick.

6.7 *Thermometer.*–0 to 50 °C, 0.5 °C divisions, conforming to the requirements of ASTM E 1.

6.8 Stopcock grease or similar sealant.

6.9 *Miscellaneous Equipment.*–Bulb syringe, and towels.

7. Reagents and Materials

7.1 Tapwater near room temperature (20 °C), should be used for calibrating the compaction mold.

8. Precautions

8.1 *Safety Precautions*:

8.1.1 This designation may involve hazardous materials, operations, and equipment.

8.1.2 Examine the compaction mold for sharp edges or burrs.

8.2 *Technical Precautions.*–Examine the mold to ensure that it has a smooth finish on the inside and top surfaces. Rough machining could produce ridges or gouges which affect volume measurements.

9. Calibration and Standardization

9.1 Verify that equipment is currently calibrated in accordance with the applicable calibration procedure. If the calibration is not current, perform the calibration before using the equipment for this procedure.

USBR 1000 Standards for Linear Measurement Devices
USBR 1012 Calibrating Balances or Scales

10. Conditioning

10.1 Perform this calibration in an area isolated from drafts and/or extreme temperature fluctuations.

10.2 The mold, measurement equipment, water, and laboratory environment must all be at about the same temperature while performing this procedure.

11. Procedure

11.1 All data are to be recorded on the "Compaction Mold-Volume Calibration" form as shown on figure 2.

11.2 Record the nominal volume, identification number, and type of mold.

11.3 Determine the volume of the mold using the water-filling method as described in subparagraph 11.4 and then use the linear-measurement method as described in subparagraph 11.5. Compare the results for acceptability in accordance with subparagraph 11.6

11.4 *Determination of Mold Volume by the Water-Filling Method*:

11.4.1 Lightly grease the bottom of the compaction mold and place it on one of the plastic or glass plates. Lightly grease the top of the mold; be careful not to get grease on the inside of the mold. Determine the mass of the mold and the two plates.

11.4.2 Record the mass of the mold and plates to the nearest 0.01 lbm (1 g).

11.4.3 Place the mold and the bottom plate on a firm, level surface and fill the mold slightly above its rim with water.

11.4.4 Slide the other glass or plastic plate over the top surface of the mold so that it remains completely filled with water and air bubbles are not entrapped. A bulb syringe may be useful to add or remove water as the plate is sliding into place.

11.4.5 Completely dry any excess water from the outside of the mold and plates.

11.4.6 Determine and record the mass of mold, plates, and water to the nearest 0.01 lbm (1 g).

11.4.7 Remove the top plate. Determine and record the temperature of water to the nearest 0.5 °C.

11.4.8 Determine and record the absolute density of water at the measured temperature, using table 1.

11.4.9 Empty the water from the mold.

11.4.10 Clean and dry the mold thoroughly.

11.4.11 Calculate and record the volume of the compaction mold to the nearest 0.0001 ft³ (1 cm³).

11.5 *Determination of Mold Volume by the Linear-Measurement Method*:

11.5.1 Using either the vernier caliper or the inside micrometer determine the inside diameter of the mold.

Table 1. – Absolute density of water in grams per cubic centimeter.†

Degrees C	0	1	2	3	4	5	6	7	8	9
0	0.999841	847	854	860	866	872	878	884	889	895
1	900	905	909	914	918	923	927	930	934	938
2	941	944	947	950	953	955	958	960	962	964
3	965	967	968	969	970	971	972	972	973	973
4	973	973	973	972	972	972	970	969	968	966
5	965	963	961	959	957	955	952	950	947	944
6	941	938	935	931	927	924	920	916	911	907
7	902	898	893	888	883	877	872	866	861	855
8	849	843	837	830	824	817	810	803	796	789
9	781	774	766	758	751	742	734	726	717	709
10	700	691	682	673	664	654	645	635	625	615
11	605	595	585	574	564	553	542	531	520	509
12	498	486	475	463	451	439	427	415	402	390
13	377	364	352	339	326	312	299	285	272	258
14	244	230	216	202	188	173	159	144	129	114
15	099	084	069	054	038	023	007	*991	*975	*959
16	0.998943	926	910	893	877	860	843	826	809	792
17	774	757	739	722	704	686	668	650	632	613
18	595	576	558	539	520	501	482	463	444	424
19	405	385	365	345	325	305	285	265	244	224
20	203	183	162	141	120	099	078	056	035	013
21	0.997992	970	948	926	904	882	860	837	815	792
22	770	747	724	701	678	655	632	608	585	561
23	538	514	490	466	442	418	394	369	345	320
24	296	271	246	221	196	171	146	120	095	069
25	044	018	*992	*967	*941	*914	*888	*862	*836	*809
26	0.996783	756	729	703	676	649	621	594	567	540
27	512	485	457	429	401	373	345	317	289	261
28	232	204	175	147	118	089	060	031	002	973
29	0.995944	914	885	855	826	796	766	736	706	676
30	646	616	586	555	525	494	464	433	402	371

† For inch-pound applications, multiply the values in this table by 62.4280 to convert to lbm/ft³.
* First three significant figures shown in line below.

Make six measurements of the diameter; three at the top end of the mold and three at the bottom end of the mold. Space each of the three top and bottom measurements equally around the circumference of the mold. Record these values to the nearest 0.001 inch (0.02 mm).

11.5.2 Using either the vernier caliper or the depth micrometer, determine the inside height of the mold. Make three measurements of the height equally spaced around the circumference of the mold. Record these values to the nearest 0.001 inch (0.02 mm).

11.5.3 Calculate and record to the nearest 0.001 inch (0.02 mm) the average inside diameter of the top and the average inside diameter of the bottom.

11.5.4 Calculate and record to the nearest 0.01 in^2 (0.1 mm^2) the inside area of the mold at the top and the inside area at the bottom.

11.5.5 Calculate and record to the nearest 0.01 in^2 (0.1 mm^2) the average inside area of the mold.

11.5.6 Calculate and record to the nearest 0.001 inch (0.02 mm) the average inside height.

11.5.7 Calculate and record the volume of the mold to the nearest 0.0001 ft^3 (1 cm^3).

11.6 The volumes calculated from the two methods must be within 0.0003 ft^3 (9 cm^3).

11.6.1 If the two volumes are not within the above limit, check all calculations and verify that all equipment is performing correctly, that all calibrations are correct, and that the procedures and techniques used are correct. If problems are not discovered, then repeat subparagraphs 11.3 through 11.6. If the values are still inconsistent, then failure to obtain agreement is an indication that the mold is badly worn or deformed and must be replaced.

11.7 Compare the volumes with previously determined values to verify that they are consistent and reasonable. If they are not go to subparagraph 11.6.1.

12. Calculations

12.1 The calculations are as shown on the "Compaction Mold-Volume Calibration" form (fig. 2).

13. Report

13.1 The report is to consist of a completed and checked "Compaction Mold-Volume Calibration" form (fig. 2).

13.2 All calculations are to show a checkmark.

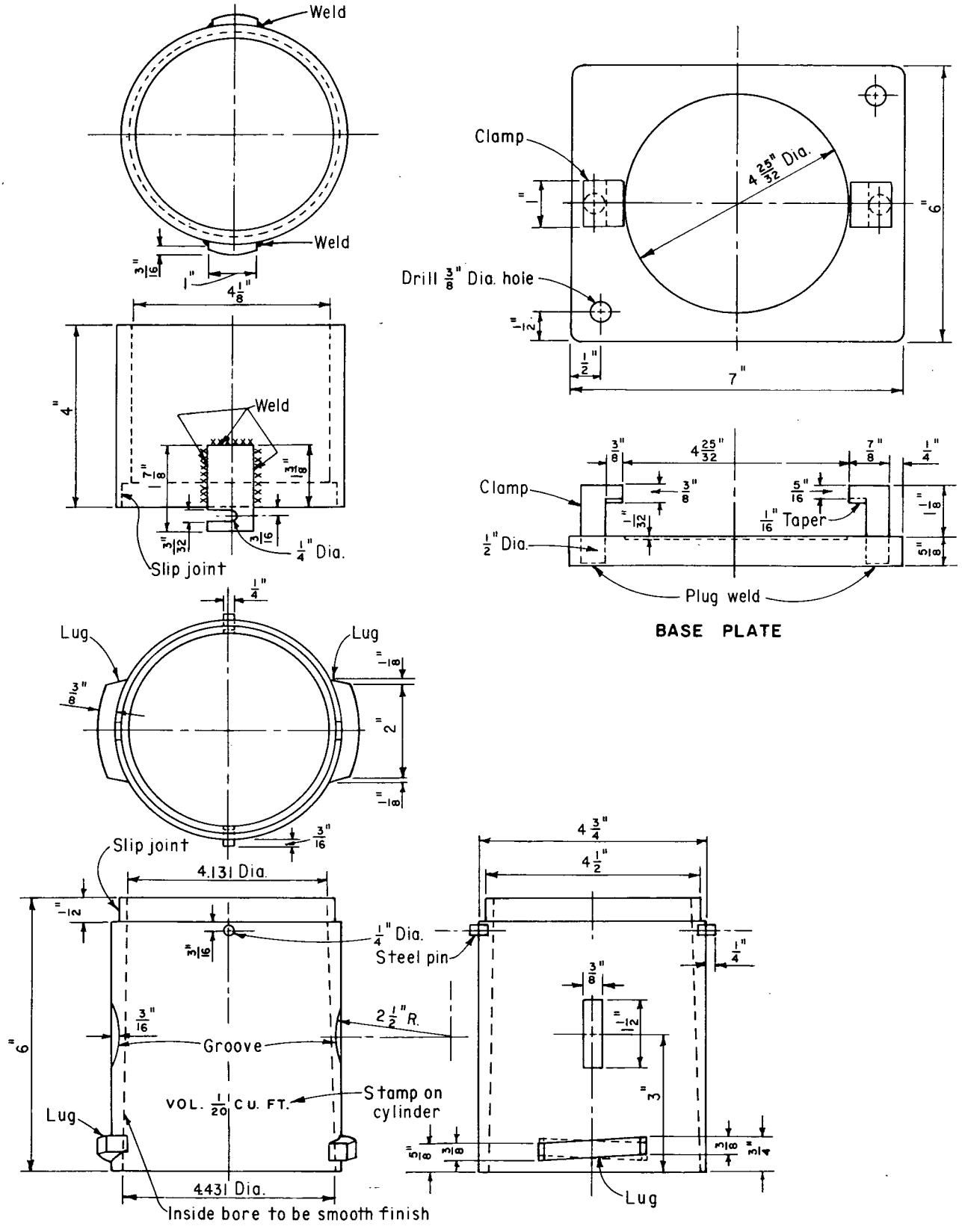

Figure 1. – Compaction mold.

7-1708A (12-86)
Bureau of Reclamation

COMPACTION MOLD - VOLUME CALIBRATION SHEET

Designation USBR 1009 - 89

CALIBRATION PERFORMED BY Example DATE
COMPUTED BY DATE
CHECKED BY DATE

MOLD No. 1 NOMINAL VOLUME 0.05 [X] ft³ [ ] cm³ MOLD TYPE: [X] Rainhart [ ] Howard [ ] Hand [ ] Other

DETERMINATION OF MOLD VOLUME USING MICROMETER

			TRIAL NO.	TOP	BOTTOM
INSIDE DIAMETER OF MOLD	[X] in	[ ] mm	1	4.133	4.430
			2	4.129	4.425
			3	4.127	4.432
(1) Average inside diameter	[X] in	[ ] mm		4.130	4.429
(2) Inside area of mold = $\frac{\pi (1)^2}{4}$	[X] in²	[ ] mm²		13.40	15.41
(3) Average inside area of mold = $\frac{(2)\text{Top} + (2)\text{Bottom} + \sqrt{(2)\text{Top} \times (2)\text{Bottom}}}{3}$	[X] in²	[ ] mm²		14.39	
INSIDE HEIGHT OF MOLD	[X] in	[ ] mm	1	5.991	
			2	5.988	
			3	5.983	
(4) Average inside height	[X] in	[ ] mm		5.987	
(5) Volume of mold = $\frac{(3)(4)}{C^*}$	[X] ft³	[ ] cm³		0.0499	

DETERMINATION OF MOLD VOLUME BY WATER FILLING METHOD

(6) Mass of mold + glass plates + water	[X] lbm	[ ] g	13.13
(7) Mass of mold + glass plates	[X] lbm	[ ] g	10.01
(8) Mass of water (6) - (7)	[X] lbm	[ ] g	3.12
(9) Temperature of water in °C			21.5
**(10) Absolute density of water		g/cm³	0.997882
(11) Volume of mold = $\frac{(8)^{***}}{(10) \times 62.4280}$ or $\frac{(8)^{****}}{(10)}$	[X] ft³	[ ] cm³	0.0501

Mass of mold [X] lbm [ ] g 5.68

* For inch pound applications, C = 1,728 and converts in³ to ft³;
For SI metric applications, C = 1,000 and converts mm³ to cm³
** Absolute density value obtained from Table 1, USBR 1009
*** Inch-pound application
**** SI metric application

REMARKS

GPO 849 - 725

Figure 2. - Compaction mold-volume calibration — example.

UNITED STATES DEPARTMENT OF THE INTERIOR
BUREAU OF RECLAMATION

USBR 1010-89

PROCEDURE FOR

CALIBRATING UNIT WEIGHT MEASURES

INTRODUCTION

This procedure is under the jurisdiction of the Geotechnical Services Branch, code D-3760, Research and Laboratory Services Division, Denver Office, Denver, Colorado. The procedure is issued under the fixed designation USBR 1010. The number immediately following the designation indicates the year of acceptance or the year of last revision.

1. Scope

1.1 This designation outlines the procedure for calibrating unit weight measures used for determining minimum and maximum index unit weights of cohesionless soils in accordance with USBR 5525 and 5530.

1.2 Calibration consists of determining the volume of the measure, the volume per unit height of the measure, and the reference dial reading constant for the equipment.

1.3 The volume is determined by a water-filling method and checked by a linear-measurement method.

2. Applicable Documents

2.1 *USBR Procedures*:

USBR 1000 Standards for Linear Measurement Devices
USBR 1007 Calibrating Dial Indicators
USBR 1012 Calibrating Balances or Scales
USBR 3900 Standard Definitions of Terms and Symbols Relating to Soil Mechanics
USBR 5525 Determining the Minimum Index Unit Weight of Cohesionless Soils
USBR 5530 Determining the Maximum Index Unit Weight of Cohesionless Soils

2.2 *ASTM Standard*:

E 1 ASTM Thermometers

3. Summary of Method

3.1 *Volume by Water Filling.*–A unit weight measure is completely filled with water. The mass of water required to fill the measure is obtained, the absolute density of water determined and, from these values, the volume of the measure is calculated.

3.2 *Volume by Linear Measurement.*–Measurements of the inside diameter and height of a unit weight measure are carefully obtained. The volume and volume per unit height of the measure are calculated using those values. The calculated volume is compared to the volume determined in subparagraph 3.1.

3.3 *Determination of Reference Dial Reading Constant.*–A calibration bar is placed across the top of a measure. Dial indicator readings are obtained on both the right and left side of the measure. The thickness of the calibration bar and surcharge baseplate is determined. From these values, a reference dial reading constant is calculated for use in the maximum index unit weight test (USBR 5530).

4. Significance and Use

4.1 The 0.1- and 0.5-ft³ (2830- and 4160-cm³) capacity measures are used in determining both the minimum and maximum index unit weights of cohesionless soils (USBR 5525, 5530). Periodic calibration of these measures must be performed to ensure reliable laboratory test results.

4.2 This calibration procedure is to be performed upon receipt of the measure, annually after receipt, before reuse after anything occurs which may affect the volume of the measure, or whenever test results are questionable.

4.3 Upon receipt, the measure is checked to verify that it conforms to the dimensional requirements shown on figure 1.

5. Terminology

5.1 Definitions are in accordance with USBR 3900.

6. Apparatus

6.1 *Balance or Scale.*–Typical balances or scales used for this designation are:

Application	*Readable to*	*Approximate capacity*
Measures about 0.1 ft³		
Inch-pound units	0.01 lbm	50 lbm
SI units	1 g	20 kg
Measures about 0.5 ft³		
Inch-pound units	0.01 lbm	150 lbm
SI units	10 g	80 kg

6.2 *Unit Weight Measure* (fig. 1a).–Cylindrical unit-weight measure of 0.1 and 0.5 ft³ (2830 and 14 160 cm³) capacity, conforming to the dimensional requirements shown on figure 1.

6.3 *Surcharge Baseplates* (fig. 1b).–One steel surcharge baseplate, approximately 0.5 inch (13 mm) thick for each size mold, made from cold-rolled steel.

6.4 *Dial Indicator Reference Bracket* (fig. 2).–A reference bracket which holds the dial indicator assembly to ensure that the indicator can be consistently adjusted.

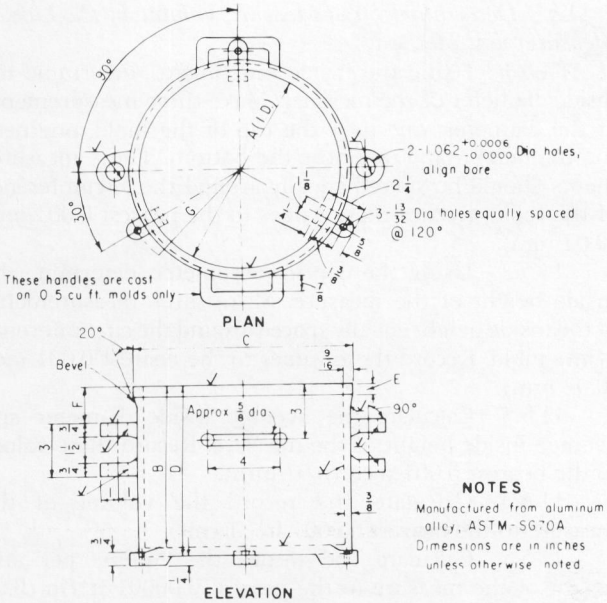

SIZE MEASURE FT^3 (cm^3)	DIMENSIONS, IN. (mm)						
	A	B	C	D	E	F	G
0.1 (2831)	6.000(152.4)	6.112(155.2)	7 1/8(181.0)	6 1/2(165.1)	1/2 (12.7)	1 1/8(28.6)	4.0(101.6)
0.5(14158)	11.000(279.4)	9.092(230.9)	12 1/8(308.0)	9 1/2(241.3)	5/8 (15.9)	2 (50.8)	6.5(165.1)

(a) Unit weight measure.

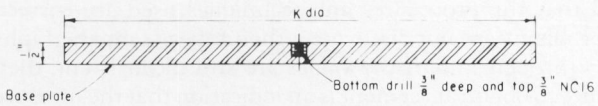

MEASURE SIZE ft^3 (cm^3)	K Dimensions in (mm)
0.1(2831)	5.969 (152)
0.5(14158)	10.938(278)

(b) Surcharge baseplate.

Figure 1. – Index unit weight testing equipment.

6.5 *Depth Micrometer.*–For inch-pound applications, a depth micrometer having a measuring range of at least 0 to 10 inches, readable to at least 0.001 inch. For metric applications, a depth micrometer having a measuring range of at least 0 to 250 mm, readable to at least 0.02 millimeter.

6.6 *Inside Micrometer.*–For inch-pound applications, an inside micrometer having a measuring range of at least 2 to 12 inches, readable to at least 0.001 inch. For metric applications, an inside micrometer having a measuring range of at least 50 to 300 mm, readable to at least 0.02 millimeter.

6.7 *Outside Micrometer.*–For inch-pound applications, an outside micrometer having a measuring range of at least 0 to 1 inch, readable to at least 0.001 inch. For metric applications, an outside micrometer having a measuring range of at least 0 to 25 mm, readable to at least 0.02 millimeter.

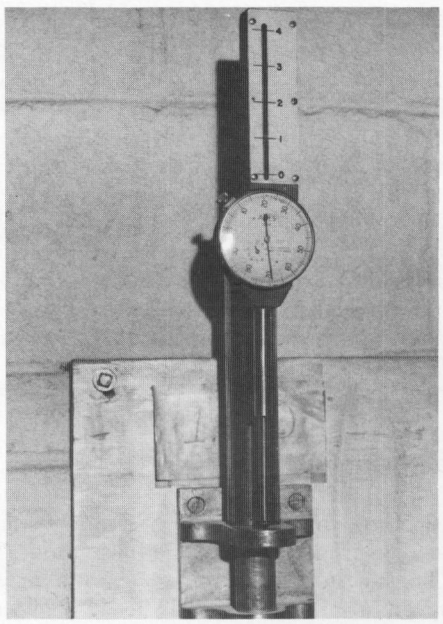

Figure 2. – Dial indicator reference bracket and dial indicator assembly.

6.8 *Dial Indicator Assembly.*–A device used for the measurement of the volume of specimens. The assembly shall consist of a dial indicator (gauge) having a 2.000-inch (50-mm) or greater range, with 0.001-inch (0.02-mm) or finer graduations, mounted on a dial indicator holder so that the indicator stem is parallel with the vertical axis of the measure. The assembly may be equipped with a spacer ring(s) used to extend the range of the assembly if desired.

6.9 *Calibration Bar.*–A steel bar having a length of 12 inches (300 mm), a width of about 3 inches (75 mm), and a thickness of 1/8 inch (3 mm).

6.10 *Plastic or Glass Plates.*–One plate approximately 8 by 8 by 1/4 inches thick (200 by 200 by 6 mm); one plate approximately 12 by 12 by 1/4-inch thick (300 by 300 by 6 mm).

6.11 *Thermometer.*–0 °C to 50 °C, 0.5 °C divisions, conforming to the requirements of ASTM E 1.

6.12 Stopcock grease or similar sealant.

6.13 *Miscellaneous Equipment.*–Bulb syringe and towels.

7. Reagents and Materials

7.1 Tapwater near room temperature (20 °C) should be used for calibrating the unit weight measures.

8. Precautions

8.1 *Safety Precautions*:

8.1.1 This designation may involve hazardous materials, operations, and equipment.

8.1.2 Examine the measure (as received or before its use) for sharp edges or burrs.

8.2 *Technical Precautions.*–Examine the measure to ensure that it has a smooth finish on the inside and top surfaces. Rough machining could produce ridges or gouges which affect volume measurements.

9. Calibration and Standardization

9.1 Verify that equipment is currently calibrated in accordance with the applicable calibration procedure. If the calibration is not current, perform the calibration before using the equipment for this procedure.

USBR 1000 Standards for Linear Measurement Devices
USBR 1007 Calibrating Dial Indicators
USBR 1012 Calibrating Balances or Scales

10. Conditioning

10.1 Perform this calibration in an area isolated from drafts and/or extreme temperature fluctuations.

10.2 The measure, measurement equipment, water, and laboratory environment must all be at about the same temperature while performing this procedure.

11. Procedure

11.1 All data are to be recorded on the "Unit Weight Measure Calibration" form as shown on figure 3.

11.2 Record the nominal volume, identification number, and type of measure.

11.3 Determine the volume of the measure using the water-filling method as described in subparagraph 11.4 and then use the linear-measurement method as described in subparagraph 11.5. Compare the results for acceptability in accordance with subparagraph 11.6.

11.4 *Determination of Measure Volume by the Water-Filling Method*:

11.4.1 Lightly grease the top of the measure; be careful not to get grease on the inside of the measure. Determine and record the mass of the measure and the glass or plastic plate using a scale of appropriate capacity to the nearest 0.01 lbm.

11.4.2 Place the measure on a firm, level surface and fill the measure slightly above its rim with water.

11.4.3 Slide the glass or plastic plate over the top surface of the measure so the measure remains completely filled with water and no air bubbles are entrapped. A bulb syringe may be useful to add or remove water as the plate is sliding into place.

11.4.4 Completely dry excess water from the outside of the measure and plate.

11.4.5 Determine and record the mass of the measure, glass, or plastic plate, and water to the nearest 0.01 lbm.

11.4.6 Remove the plate. Determine and record the temperature of the water to the nearest 0.5 °C.

11.4.7 Determine and record the absolute density of water from table 1.

11.4.8 Calculate and record the volume of the measure to the nearest 0.0001 ft^3 (1 cm^3).

11.5 *Determination of Measure Volume by the Linear-Measurement Method*:

11.5.1 Using the inside micrometer, determine the inside diameter of the measure. Make three measurements of the diameter; one near the top of the mold, one near the midheight, and one near the bottom. These measurements should be spaced equally around the circumference of the mold. Record these values to the nearest 0.001 inch (0.02 mm).

11.5.2 Using the depth micrometer, determine the inside height of the measure. Make three measurements of the inside height equally spaced around the circumference of the mold. Record these values to the nearest 0.001 inch (0.02 mm).

11.5.3 Calculate the average inside diameter and average inside height of the measure. Record these values to the nearest 0.001 inch (0.02 mm).

11.5.4 Calculate and record the volume of the measure to the nearest 0.0001 ft^3 (1 cm^3).

11.5.5 Calculate and record the volume per unit height of the measure to the nearest 0.00001 ft^3/in (0.01 cm^3/mm) as shown on figure 3.

11.6 The volumes calculated from the two methods must be within 0.0005 ft^3 for the 0.1-ft^3 measure and within 0.0025 ft^3 for the 0.5-ft^3 measure.

11.6.1 If the two volumes are not within the above limit, check all calculations and verify that all equipment is performing correctly, that all calibrations are correct, and that the procedures and techniques used are correct. If problems are not discovered, then repeat subparagraphs 11.3 through 11.6. If the values are still inconsistent, then failure to obtain agreement is an indication that the measure is badly worn or deformed and must be replaced.

11.7 Compare the volumes with previously determined values to verify that they are consistent and reasonable. If they are not, go to subparagraph 11.6.1.

11.8 *Determination of Reference Bracket Reading*:

11.8.1 Place the dial indicator in the dial indicator reference bracket and record the dial indicator reading on the calibration form and in a conspicuous location on the reference bracket. If a spacer ring is used, the dial indicator reading with the spacer ring also should be determined and posted.

NOTE 1.–The reference bracket reading is used as a check of the dial indicator to ensure consistent dial indicator readings. The reference bracket reading should be checked before using the dial indicator. If reference bracket readings are inconsistent, the dial indicator should be recalibrated prior to its use.

11.9 *Determination of Reference Dial Reading Constant*:

11.9.1 With an outside micrometer, measure the thickness of the calibration bar at a point approximately 1 inch (25 mm) from one end. Mark the point measured and record the bar thickness on the calibration form. The point measured is the point of contact of the dial gauge indicator on the calibration bar.

11.9.2 Place the calibration bar across the top of the measure along the axis of the guide brackets (fig. 4). The

7-1708 (9-86) Bureau of Reclamation	UNIT WEIGHT MEASURE CALIBRATION	Designation USBR 1010-89
MEASURE NO. 1	NOMINAL VOLUME 0.1 ☒ ft³ ☐ cm³	DIAL INDICATOR NO. DI-1
CALIBRATION PERFORMED BY / DATE	COMPUTED BY / DATE	CHECKED BY / DATE

DETERMINATION OF MEASURE VOLUME USING MICROMETER

			TRIAL NO.	
Inside diameter of measure			1	6.037
			2	6.046
			3	6.023
(1) Average inside diameter	☒ in	☐ mm		6.035
Inside height of measure			1	6.072
			2	6.076
			3	6.082
(2) Average inside height	☒ in	☐ mm		6.077
(3) Volume of measure = $\frac{\pi (1)^2 (2)}{4C^*}$	☒ ft³	☐ cm³		0.1006

DETERMINATION OF MEASURE VOLUME BY WATER FILLING METHOD

(4) Mass of measure + glass plate + water	☒ lbm	☐ g	16.32
(5) Mass of measure + glass plate	☒ lbm	☐ g	10.06
(6) Mass of water (4) - (5)	☒ lbm	☐ g	6.26
(7) Temperature of water °C			18.0
**(8) Absolute density of water	☒ lbm/ft³	☐ g/cm³	62.34
(9) Volume of measure = $\frac{(6)}{(8)}$	☒ ft³	☐ cm³	0.1004
(10) Volume per unit height = $\frac{(9)}{(2)}$	☒ ft³/in	☐ cm³/mm	0.01652

DETERMINATION OF REFERENCE DIAL READING CONSTANT

Dial indicator readings, left side			1	1.639
			2	1.639
			3	1.639
right side			1	1.636
			2	1.635
			3	1.635
(11) Average dial indicator reading	☒ in	☐ mm		1.637
(12) Calibration bar thickness	☒ in	☐ mm		0.216
Surcharge base plate thickness			1	0.508
			2	0.508
			3	0.513
			4	0.513
(13) Average base plate thickness	☒ in	☐ mm		0.511
(14) Specimen height at zero dial = (2) - [(11) - (12) + (13)]	☒ in	☐ mm		4.145
(15) Reference bracket reading	☒ in	☐ mm		0.360

*For inch pound application, C = 1,728 and converts in^3 to ft^3
For SI metric applications, C = 1,000 and converts mm^3 to cm^3
**Absolute density value obtained from Table 1, USBR 1010

Figure 3. - Unit weight measure calibration — example.

Table 1. – Absolute density of water in grams per cubic centimeter.†

Degrees C	0	1	2	3	4	5	6	7	8	9
0	0.999841	847	854	860	866	872	878	884	889	895
1	900	905	909	914	918	923	927	930	934	938
2	941	944	947	950	953	955	958	960	962	964
3	965	967	968	969	970	971	972	972	973	973
4	973	973	973	972	972	972	970	969	968	966
5	965	963	961	959	957	955	952	950	947	944
6	941	938	935	931	927	924	920	916	911	907
7	902	898	893	888	883	877	872	866	861	855
8	849	843	837	830	824	817	810	803	796	789
9	781	774	766	758	751	742	734	726	717	709
10	700	691	682	673	664	654	645	635	625	615
11	605	595	585	574	564	553	542	531	520	509
12	498	486	475	463	451	439	427	415	402	390
13	377	364	352	339	326	312	299	285	272	258
14	244	230	216	202	188	173	159	144	129	114
15	099	084	069	054	038	023	007	*991	*975	*959
16	0.998943	926	910	893	877	860	843	826	809	792
17	774	757	739	722	704	686	668	650	632	613
18	595	576	558	539	520	501	482	463	444	424
19	405	385	365	345	325	305	285	265	244	224
20	203	183	162	141	120	099	078	056	035	013
21	0.997992	970	948	926	904	882	860	837	815	792
22	770	747	724	701	678	655	632	608	585	561
23	538	514	490	466	442	418	394	369	345	320
24	296	271	246	221	196	171	146	120	095	069
25	044	018	*992	*967	*941	*914	*888	*862	*836	*809
26	0.996783	756	729	703	676	649	621	594	567	540
27	512	485	457	429	401	373	345	317	289	261
28	232	204	175	147	118	089	060	031	002	*973
29	0.995944	914	885	855	826	796	766	736	706	676
30	646	616	586	555	525	494	464	433	402	371

† For inch-pound applications, multiply the values in this table by 62.4280 to convert to lbm/ft³.
* First three significant figures shown in line below.

measured end of the calibration bar should be flush with the outer edge of the top of the measure.

11.9.3 Insert the dial gauge assembly in the guide bracket on the measure keeping the dial gauge stem on top of the calibration bar and on the axis of the guide brackets as shown on figure 4. The dial gauge assembly should be placed such that matchmarks on the guide brackets and assembly are aligned and the tip of the dial gauge is on the mark on the calibration bar. Record the dial indicator reading to the nearest 0.001 inch (0.02 mm).

11.9.4 Remove the dial gauge assembly from the measure.

11.9.5 Obtain two more dial indicator readings by repeating subparagraphs 11.9.3 and 11.9.4 so that a total of three readings are determined.

11.9.6 Obtain three dial indicator readings on the opposite gauge bracket in accordance with subparagraphs 11.9.3 through 11.9.5.

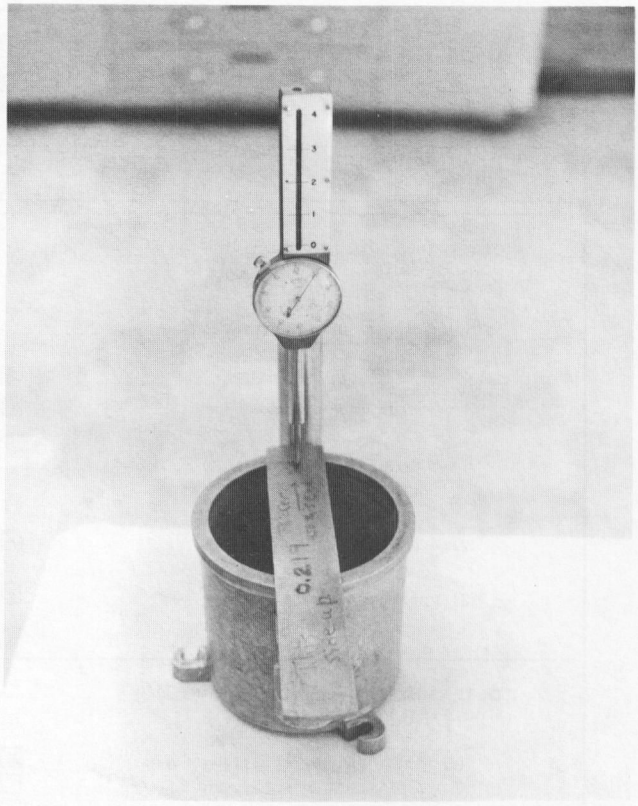

Figure 4. – Determination of reference dial reading constant.

11.9.7 Calculate and record the average dial indicator reading.

11.10 *Surcharge Baseplate Thickness*:

11.10.1 With an outside micrometer, measure the thickness of the surcharge baseplate at four equally spaced points around the perimeter approximately 1/2 inch (13 mm) from the edge. Record the values to the nearest 0.001 inch (0.02 mm).

11.10.2 Determine and record the average baseplate thickness to the nearest 0.001 inch (0.02 mm).

11.10.3 Calculate and record the specimen height at zero dial.

12. Calculations

12.1 The calculations are as shown on the "Unit Weight Measure Calibration" form (fig. 3).

13. Report

13.1 The report is to consist of a completed and checked "Unit Weight Measure Calibration" form (fig. 3).

13.2 All calculations are to show a checkmark.

UNITED STATES DEPARTMENT OF THE INTERIOR
BUREAU OF RECLAMATION

USBR 1011-89

PROCEDURE FOR

CALIBRATING MEASURES FOR SAND CALIBRATION

INTRODUCTION

This procedure is under the jurisdiction of the Geotechnical Services Branch, code D-3760, Research and Laboratory Services Division, Denver Office, Denver, Colorado. The procedure is issued under the fixed designation USBR 1011. The number immediately following the designation indicates the year of acceptance or the year of last revision.

1. Scope

1.1 This designation outlines the procedure for calibrating the measure used to determine the density of calibrated sand in accordance with USBR 1435. The calibrated sand is used in determining the unit weight of soils in place by the sand-cone method in accordance with USBR 7205.

1.2 Calibration consists of determining the volume of the measure.

1.3 The volume is determined by a water-filling method and checked by a linear-measurement method. If the shape of the measure is such that the linear-measurement method is not practical, the water-filling method is performed twice.

2. Applicable Documents

2.1 *USBR Procedures*:

USBR 1000 Standards for Linear Measurement Devices
USBR 1012 Calibrating Balances or Scales
USBR 1435 Calibrating Sand-Cone Equipment and Sand
USBR 3900 Standard Definitions of Terms and Symbols Relating to Soil Mechanics
USBR 7205 Determining Unit Weight of Soils In-Place by the Sand-Cone Method

2.2 *ASTM Standard*:

E 1 ASTM Thermometers

3. Summary of Methods

3.1 *Volume by Water Filling.*–The measure used to determine the density of calibrated sand is completely filled with water. The mass of water required to fill the measure is obtained, the absolute density of water is determined and, from these values, the volume of the measure is calculated.

3.2 *Volume by Linear Measurement.*–Measurements of the inside diameter and height of a measure used to determine the density of calibrated sand are carefully obtained. The volume of the measure is calculated using these values. The calculated volume is compared to the volume determined in subparagraph 3.1. If the shape of the measure is such that the linear-measurement method is not practical, the water-filling method is performed twice and the average volume used.

4. Significance and Use

4.1 Special measures are used in determining the density of calibrated sand (USBR 1435) for in-place unit weight determination of soil by the sand-cone method (USBR 7205). Periodic calibration of these measures must be performed to ensure reliable unit weight determination.

4.2 The volume and shape of the measure must approximate the volume and shape of the hole to be dug at the test site. Generally, measures of appropriate size are not available commercially and must be specially fabricated.

4.3 This calibration procedure is to be performed upon receipt of the measure, annually after receipt, before reuse after anything occurs which may affect the volume of the measure, and whenever test results are questionable.

5. Terminology

5.1 Definitions are in accordance with USBR 3900.

6. Apparatus

6.1 *Balance or Scale.*–Typical balances or scales used for this designation are:

Application	*Readable to*	*Approximate capacity*
Measures about 0.25 ft³		
Inch-pound units	0.01 lbm	50 lbm
SI units	1 g	20 kg
Measures about 0.5 ft³		
Inch-pound units	0.01 lbm	150 lbm
SI units	0.01 kg	80 kg

6.2 *Measure.*–A container having the approximate shape and volume of the test hole to be dug for the sand-cone test (USBR 7205). Details and illustrations of some measures are given on figures 1 through 3. The inside diameter, or opening, of the calibration measure must be equal to or slightly smaller than the hole diameter of the sand-cone template.

6.3 *Depth Micrometer.*–For inch-pound applications, a depth micrometer having a measuring range of 0 to 12 inches, readable to at least 0.001 inch. For SI applications, a depth micrometer having a measuring range of 0 to 300 mm, readable to at least 0.02 mm.

6.4 *Inside Micrometer.*–For inch-pound applications, an inside micrometer having a measuring range of 2 to 12 inches, readable to at least 0.001 inch. For SI applications, an inside micrometer having a measuring range of 50 to 300 mm, readable to at least 0.02 mm.

6.5 *Gauge Blocks.*–A set of precision gauge blocks that may be used to extend the measuring range of the depth micrometer if necessary.

6.6 *Thermometer.*–0 to 50 °C, 0.5 °C divisions, conforming to the requirements of ASTM E 1.

6.7 *Plastic or Glass Plate.*–One plastic or glass plate, about 12 by 12 inches by 1/4-inch thick (300 by 300 by 6-mm).

6.8 Stopcock grease or similar sealant.

6.9 *Miscellaneous Equipment.*–Bulb syringe and towels.

7. Reagents and Materials

7.1 Tapwater near room temperature (20 °C) should be used for calibrating the measure.

8. Precautions

8.1 *Safety Precautions*:

8.1.1 This designation may involve hazardous materials, operations, and equipment.

8.1.2 Examine the measure for sharp edges or burrs.

8.2 *Technical Precautions.*–Examine the measure to ensure that it has a smooth finish on the inside and top surfaces. Rough machining could produce ridges or gouges which affect volume measurements.

9. Calibration and Standardization

9.1 Verify that equipment is currently calibrated in accordance with the applicable calibration procedure. If the calibration is not current, perform the calibration before using the equipment for this procedure.

USBR 1000 Standards for Linear Measurement Devices
USBR 1012 Calibrating Balances or Scales

10. Conditioning

10.1 Perform this calibration in an area isolated from drafts and/or extreme temperature fluctuations.

10.2 The measure, measurement equipment, water, and the laboratory environment must all be at about the same temperature while performing this procedure.

11. Procedure

11.1 All data are to be recorded on the "Measure for Calibrated Sand Calibration Sheet" form as shown on figure 4.

11.2 Record the nominal sizes (capacity, diameter, height) and control number along with any other identifying markings of the measure to be calibrated.

11.3 Determine the volume of the measure using the water-filling method as described in subparagraph 11.4 and then use the linear-measurement method as described in subparagraph 11.5. Compare the results for acceptability in accordance with subparagraph 11.6.

11.3.1 If the shape of the measure is such that the linear-measurement method is not practical, perform the water-filling method twice and compare the results for acceptability in accordance with subparagraph 11.8.

11.4 *Determination of Measure Volume — Water-Filling Method*:

11.4.1 Lightly grease the top of the measure; be careful not to get grease on the inside of the measure. Determine and record the mass of the measure and plastic or glass plate to the nearest 0.01 lbm (either 1 or 10 g, as appropriate).

11.4.2 Place the measure on a firm, level surface and fill the measure slightly above its rim with water.

11.4.3 Slide the glass or plastic plate over the top surface of the measure so that it remains completely filled with water and no air bubbles are entrapped. A bulb syringe may be useful to add or remove water.

11.4.4 Completely dry any excess water from the outside of the measure and plate.

11.4.5 Determine and record the mass of the measure, glass or plastic plate, and water to the nearest 0.01 lbm (either 1 or 10 g, as appropriate).

11.4.6 Calculate the mass of water used to fill the measure.

11.4.7 Remove the plate. Determine and record the temperature of the water to the nearest 0.5 °C.

11.4.8 Determine and record the absolute density of water at the measured temperature from table 1.

11.4.9 Calculate and record the volume of the measure to the nearest 0.0001 ft^3 (1 cm^3).

11.4.10 Empty the water from the measure.

11.4.11 Clean and dry the measure thoroughly.

11.5 *Determination of Measure Volume — Linear Measurement Method*:

11.5.1 Using the inside micrometer caliper, determine the inside diameter of the measure. Make six measurements of the diameter; three near the top of the measure, and three near the bottom. Space the measurements equally around the circumference of the measure at each location. Record these values to the nearest 0.001 inch (0.02 mm).

11.5.2 Using the depth micrometer, determine the inside height of the measure. Make three measurements of the inside height equally spaced around the circumference of the mold. Record these values to the nearest 0.001 inch (0.02 mm).

NOTE 1.–If the measuring range of the depth micrometer is not sufficient, place a gauge block of known height on the bottom of the measure and add its height to the measured depth of the depth micrometer.

11.5.3 Calculate the average inside diameter at top and at bottom of the measure. Record these values to the nearest 0.001 inch (0.02 mm).

11.5.4 Calculate and record the average inside diameter of the measure to the nearest 0.001 inch (0.02 mm).

Table 1. – Absolute density of water in grams per cubic centimeter.†

Degrees C	0	1	2	3	4	5	6	7	8	9
0	0.999841	847	854	860	866	872	878	884	889	895
1	900	905	909	914	918	923	927	930	934	938
2	941	944	947	950	953	955	958	960	962	964
3	965	967	968	969	970	971	972	972	973	973
4	973	973	973	972	972	972	970	969	968	966
5	965	963	961	959	957	955	952	950	947	944
6	941	938	935	931	927	924	920	916	911	907
7	902	898	893	888	883	877	872	866	861	855
8	849	843	837	830	824	817	810	803	796	789
9	781	774	766	758	751	742	734	726	717	709
10	700	691	682	673	664	654	645	635	625	615
11	605	595	585	574	564	553	542	531	520	509
12	498	486	475	463	451	439	427	415	402	390
13	377	364	352	339	326	312	299	285	272	258
14	244	230	216	202	188	173	159	144	129	114
15	099	084	069	054	038	023	007	*991	*975	*959
16	0.998943	926	910	893	877	860	843	826	809	792
17	774	757	739	722	704	686	668	650	632	613
18	595	576	558	539	520	501	482	463	444	424
19	405	385	365	345	325	305	285	265	244	224
20	203	183	162	141	120	099	078	056	035	013
21	0.997992	970	948	926	904	882	860	837	815	792
22	770	747	724	701	678	655	632	608	585	561
23	538	514	490	466	442	418	394	369	345	320
24	296	271	246	221	196	171	146	120	095	069
25	044	018	*992	*967	*941	*914	*888	*862	*836	*809
26	0.996783	756	729	703	676	649	621	594	567	540
27	512	485	457	429	401	373	345	317	289	261
28	232	204	175	147	118	089	060	031	002	*973
29	0.995944	914	885	855	826	796	766	736	706	676
30	646	616	586	555	525	494	464	433	402	371

† For inch-pound applications, multiply the values in this table by 62.4280 to convert to lbm/ft³.
* First three significant figures shown in line below.

11.5.5 Calculate and record the average inside height of the measure to the nearest 0.001 inch (0.02 mm).

11.5.6 Calculate and record the volume of the measure to the nearest 0.0001 ft³ (1 cm³).

11.6 Determine the acceptability of the values obtained from the linear-measurement method and the water-filling method by dividing either value by the other. If the value of the ratio is between 0.995 and 1.005, inclusive, use the value obtained by the water-filling method as the volume of the measure. If the value of the ratio falls outside the limits, go to subparagraph 11.7.

11.6.1 Compare the volumes with previously determined values to see if they are consistent and reasonable. If they are, go to paragraph 13. If they are not, go to subparagraph 11.7.

11.7 Check calculations and verify that all equipment is performing correctly, that all calibrations are correct, and that the procedures and techniques used are correct. Check the measure for out-of-roundness. If problems are not discovered, then repeat subparagraphs 11.3 through 11.6. If the values are still inconsistent, then failure to obtain agreement between the methods within the limits is an indication that the measure is badly worn or deformed and must be replaced.

11.8 If the water-filling method was performed twice (see subpar. 11.3.1) determine the acceptability of the two results by dividing either value by the other. If the value of the ratio is between 0.995 and 1.005, inclusive, average the two values and use the average as the volume of the measure. If the value of the ratio falls outside the limits, go to subparagraph 11.9.

11.8.1 Compare the value with previously determined values to check if it is consistent and reasonable. If so, go to paragraph 13. If not, go to subparagraph 11.9.

11.9 Check calculations and verify that all equipment is performing correctly, that all calibrations are correct, and that the procedures and techniques used are correct. If problems are not discovered then repeat subparagraphs 11.3 through 11.4 and subparagraph 11.8. Failure to obtain agreement is an indication of equipment malfunction or the procedure has been performed incorrectly.

12. Calculations

12.1 The calculations are as shown on the "Measure for Calibrated Sand Calibration" form (fig. 4).

13. Report

13.1 The report is to consist of a completed and checked "Measure for Calibrated Sand Calibration Sheet" form (fig. 4).

13.2 All calculations are to show a checkmark.

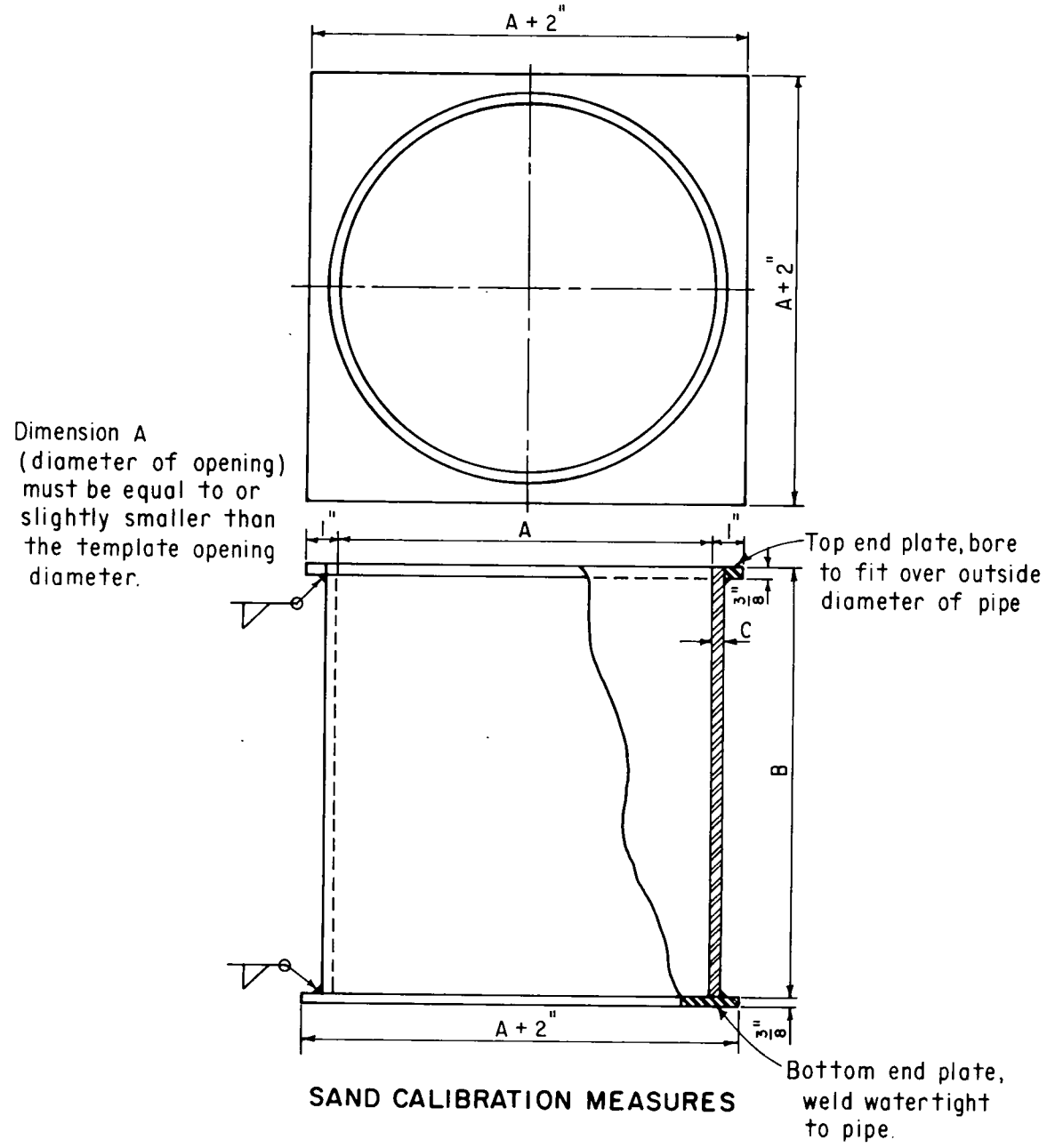

SAND CALIBRATION MEASURES

NOTES

May be fabricated from standard weight steel pipe.
Weld top and bottom end plates perpendicular to bore of pipe.

NOMINAL VOLUME (CU. FT.)	A NOMINAL DIAMETER (INCHES)	B NOMINAL HEIGHT	C WALL* THICKNESS (INCHES)
0.35	8	12	0.322
0.92	12	14	0.375

* If standard pipe is used

Figure 1. – Sand calibration measures.

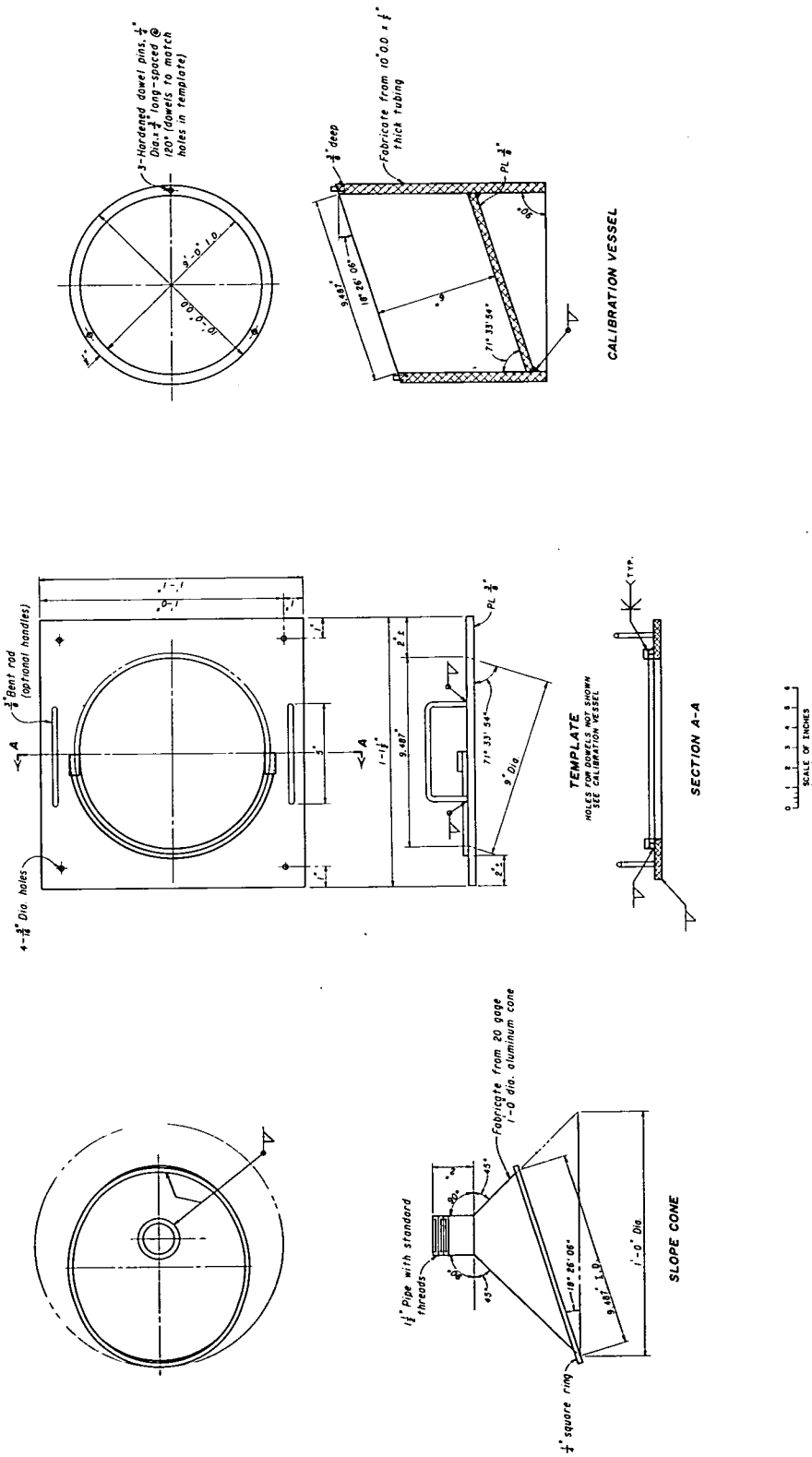

Figure 2. – Sand calibration measure for slope cone, 801-D-227

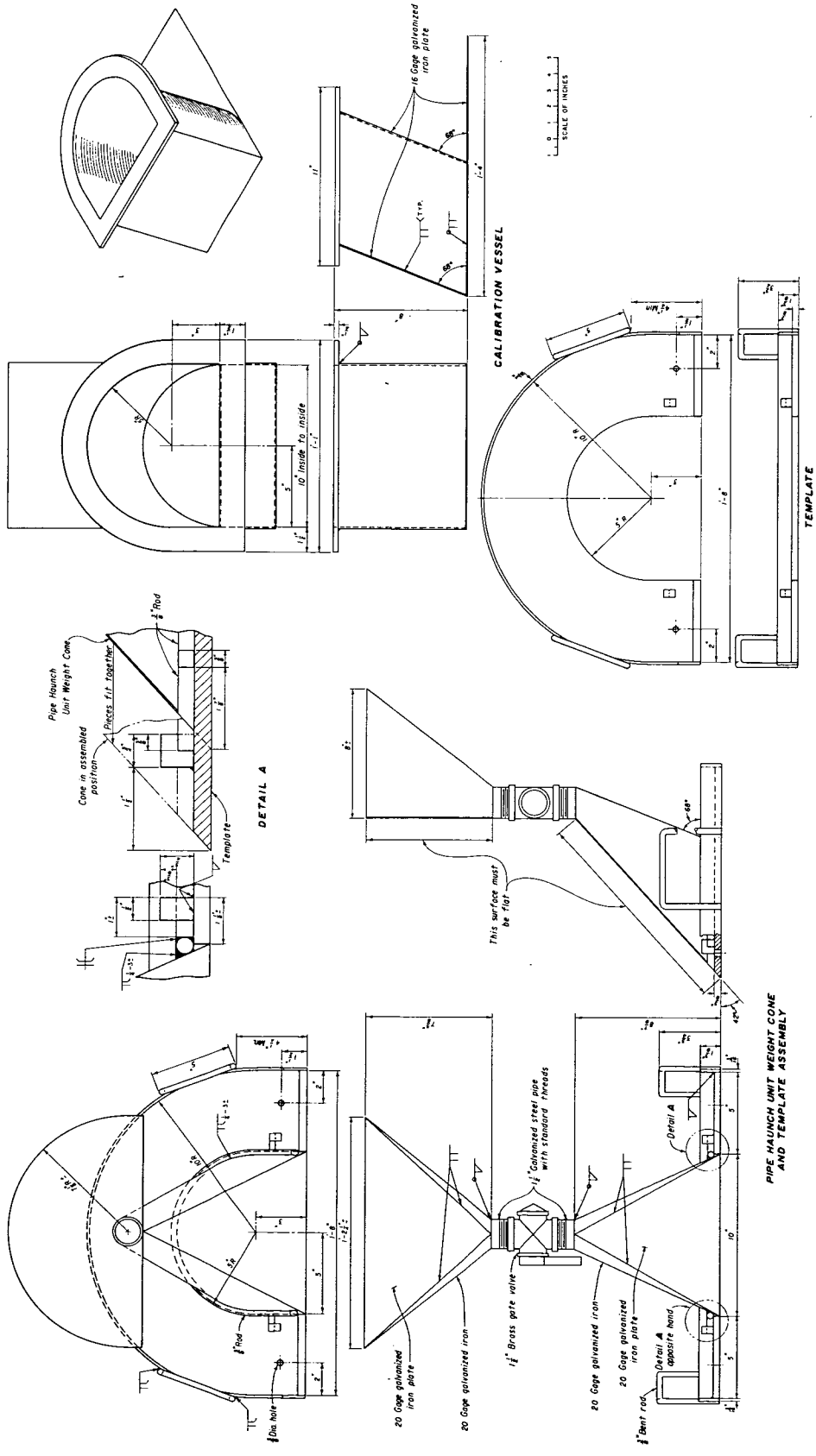

Figure 3. – Sand calibration measure for haunch cone. 801-D-223

7-2332 (9-86)
Bureau of Reclamation

MEASURE FOR CALIBRATED SAND CALIBRATION SHEET

Designation USBR 1011 - 89

CALIBRATION PERFORMED BY Example DATE

CALIBRATION COMPUTED BY DATE

CALIBRATION CHECKED BY DATE

MEASURE NO. 9 NOMINAL VOLUME 0.35 ☒ ft^3 ☐ cm^3

NOMINAL INSIDE DIAMETER 8 ☒ in ☐ mm NOMINAL INSIDE HEIGHT 12 ☒ in ☐ mm

DETERMINATION OF MEASURE VOLUME
USING MICROMETER

TRIAL NO.	TOP	BOTTOM
1	8.008	8.010
2	8.009	8.008
3	8.009	8.008
AVERAGE OF TRIALS NO. 1, 2, 3	8.009	8.009
(1) Average inside diameter = (top + bottom)/2	8.009	

INSIDE DIAMETER OF MEASURE ☒ in ☐ mm

1	12.001
2	12.004
3	12.000
(2) Average inside height	12.002
(3) Volume of measure = $\frac{\pi (1)^2 (2)}{4C^*}$	0.3499

INSIDE HEIGHT OF MEASURE ☒ in ☐ mm

(3) Volume of measure ☒ ft^3 ☐ cm^3

DETERMINATION OF MEASURE VOLUME
BY WATER FILLING METHOD

	TRIAL 1	TRIAL 2
(4) Mass of measure + glass plate + water ☒ lbm ☐ g	51.85	
(5) Mass of measure + glass plate ☒ lbm ☐ g	30.05	
(6) Mass of water = (4) - (5) ☒ lbm ☐ g	21.80	
(7) Temperature of water in °C	20.5	
(8) Absolute density of water** 0.998099 ☒ lbm/ft^3 ☐ g/cm^3	62.31	
(9) Volume of measure = $\frac{(6)}{(8)}$ ☒ ft^3 ☐ cm^3	0.3499	
(10) Average volume of measure ☐ ft^3 ☐ cm^3		

* For inch pound applications, C = 1,728 and converts in^3 to ft^3;
For SI metric applications, C = 1,000 and converts mm^3 to cm^3

** Absolute density value obtained from Table 1, USBR 1011

GPO 849-727

Figure 4. – Measure for calibrated sand calibration sheet — example.

UNITED STATES DEPARTMENT OF THE INTERIOR
BUREAU OF RECLAMATION

USBR 1012-89

PROCEDURE FOR

CALIBRATING BALANCES OR SCALES

INTRODUCTION

This procedure is under the jurisdiction of the Geotechnical Services Branch, Code D-3760, Research and Laboratory Services Division, Denver Office, Denver, Colorado. The procedure is issued under the fixed designation USBR 1012. The number immediately following the designation indicates the year of acceptance or the year of last revision.

1. Scope

1.1 This designation outlines the procedure for calibrating balances or scales used for standard laboratory testing.

1.2 This procedure is used to determine the calibration of a balance or scale over its full capacity range. The method described is used to periodically check laboratory balances or scales. If stringent calibration tolerances are required, this procedure should not be used; the apparatus should be inspected and calibrated by an appropriate certifying agency.

2. Applicable Documents

2.1 *USBR Procedure*:
USBR 3900 Standard Definitions of Terms and Symbols Relating to Soil Mechanics

2.2 *ASTM Standard*:
E 617 Standard Specification for Laboratory Weights and Precision Mass Standards

2.3 *National Bureau of Standards.*–Handbook 44 [1][1].

3. Summary of Method

3.1 Calibrated masses are placed on a balance or scale. The known mass value is compared to the balance or scale reading. The percent error is calculated, and the acceptability of the balance or scale is determined.

4. Significance and Use

4.1 Mass determinations are performed as part of virtually every laboratory soil testing procedure. Accurate mass determinations are required to ensure reliable laboratory test results. The following balances or scales are commonly used in soils laboratories: portable platform scale, fan scale, two-pan balance, and electronic balance.

4.2 It is recommended that each laboratory maintain a service contract with a company certified to perform maintenance and calibration on all scales or balances used by the laboratory. The contract should provide for annual inspection, and calibration if necessary.

4.3 If it is not feasible to maintain such a contract, the calibration checks should be performed by laboratory personnel. These should be performed annually, or more frequently if it is suspected that any scales or balances are not operating properly. Certified personnel should perform any necessary adjustments.

5. Terminology

5.1 Definitions are in accordance with USBR 3900.

5.2 Terms not included in USBR 3900 specific to this designation are:

5.2.1 *Error.*–The arithmetic difference between the mass of the precision mass standard and the balance or scale reading obtained for that standard.

5.2.2 *Percent Error.*–The ratio expressed as a percent of (1) the error calculated for a given precision mass standard, to (2) the mass of the precision mass standard.

5.2.3 *Tolerance.*–The acceptable mass deviation (error) within which a balance or scale is acceptable for most soil laboratory applications.

6. Apparatus

6.1 *Precision Mass Standards.*–Precision mass standards used for calibration of balances or scales must be of known accuracy. If suitable testing facilities for the calibration of these masses are not available locally, masses calibrated by the National Institute of Standards and Technology (formerly National Bureau of Standards) are available on request from the Bureau's Denver Office, code D-3730. Calibrated masses required for this procedure are to be such that the balance or scale may be loaded in increments equal to one-fourth, one-half, three-fourths, and total capacity of the balance or scale.

7. Precautions

7.1 *Safety Precautions*:

7.1.1 Ensure that electronic scales or balances are properly grounded and that power cords are not frayed or cut.

7.1.2 Inspect the portable scales to ensure proper mounting on the platform and that the platform and frame are constructed so as to provide sufficient strength and rigidity to prevent collapse when the scale or balance is in use.

[1] Number in brackets refers to the reference.

7.2 *Technical Precautions.*–Tables and floors on which the balances or scales are placed must not deflect.

8. Calibration and Standardization

8.1 Verify that the precision mass standards used for comparison readings are currently calibrated and meet the standards outlined in ASTM E 617. If the calibration is outdated, the precision mass standards should be calibrated before they are used for this procedure.

9. Conditioning

9.1 Perform this calibration procedure in an area that is isolated from heat sources, air currents, and vibrations. It is recommended that this calibration be performed in an environment which is as close to 68 °F (20 °C) as possible.

9.2 The balance or scale and the precision mass standards are to be placed in the environment in which they are to be calibrated for a period of at least 24 hours prior to calibration.

10. Procedure

10.1 All data are to be recorded on the "Balance or Scale Calibration" form as shown on figure 1.

10.2 Check the balance or scale to ensure that it is level and isolated from heat sources, air currents, and/or vibrations.

10.3 *Mechanical Balances or Scales*:

10.3.1 Balance the beam with no mass applied.

10.3.2 Place precision mass standards corresponding to 25, 50, 75, and 100 percent of the capacity of the balance or scale on the beam or pan.

10.3.3 Record the mass of the precision mass standard applied and the balance or scale reading for each mass.

10.3.4 Calculate error for each mass measurement.

10.3.5 Calculate percent error for each mass measurement.

10.4 *Electronic Balances or Scales*:

10.4.1 Plug the power cord into a power supply compatible to the power requirements of the electronic balance or scale.

NOTE 1.–A warmup period may be required for some electronic balances or scales.

10.4.2 Tare the balance or scale and check for a zero balance reading. Record the balance or scale reading as shown on figure 1.

10.4.3 Place precision mass standards corresponding to 25, 50, 75, and 100 percent capacity of the balance or scale on the beam or pan.

10.4.4 Record the mass of the precision mass standard applied and the balance or scale reading for each mass measurement.

10.4.5 Calculate error for each mass measurement.

10.4.6 Calculate percent error for each mass measurement.

11. Calculations

11.1 Calculate error for each mass measurement.

$$(4) = (2) - (3) \qquad (1)$$

where:

(4) = error, g or lbm
(2) = mass of precision mass standard, g or lbm
(3) = balance or scale reading, g or lbm

11.2 Calculate percent error for each mass measurement.

$$(5) = 100\,\frac{(4)}{(2)} \qquad (2)$$

where:

(5) = percent error
(4) = error, g or lbm
(2) = mass of precision mass standard, g or lbm
100 = convert from decimal to percent

12. Interpretation of Results

12.1 The following tables (1 and 2) are to be used to determine the acceptability of a balance or scale for most soil laboratory applications. If the computed error, for any precision mass standard placed on the calibrated balance or scale, is outside the acceptable tolerances—given in these tables—the balance or scale should be adjusted by certified personnel. These tables have been adapted in part from the National Bureau of Standards Handbook 44.

13. Report

13.1 The report is to consist of a completed and checked "Balance or Scale Calibration" form (fig. 1).

13.2 All calculations are to show a checkmark.

14. Reference

[1] National Bureau of Standards, Handbook 44, "*Specifications, Tolerances, and Other Technical Requirements for Weighing and Measuring Devices*," U.S. Department of Commerce, Washington, D.C., 1983.

Table 1.–Basic tolerances for balances or scales, inch-pound units.

Test mass From	Test mass To, but not including	Maximum allowable error, tolerance ±
Pounds		*Pounds*
0	1	0.002
1	2	.004
2	4	.008
4	7	.012
7	10	.016
10	15	.020
15	20	.023
20	30	.031
30	40	.039
40	50	.047
50	75	.062
75	100	.094
100	150	.125
150	200	.188
200	300	.250
300	400	.375
400	600	.500
600	800	.750
800	1000	.875
1000 and over		0.1 percent of test mass

Table 2.–Basic tolerances for balances or scales, SI units.

Test mass From	Test mass To, but not including	Maximum allowable error, tolerance ±
Grams		*Milligrams*
0	10	15
10	20	50
20	40	100
40	60	150
60	100	250
100	150	350
150	200	500
200	300	650
300	400	800
		Grams
400	500	1.0
500	750	1.5
750	1000	2.0
Kilograms		
1	2	4.0
2	3	5.5
3	5	7.5
5	10	11.0
10	15	15.0
15	20	19.0
20	30	25.0
30	40	35.0
40	50	45.0
50 kilograms and over		0.1 percent of test mass

7-2310 (9-85) Bureau of Reclamation	BALANCE OR SCALE CALIBRATION	Designation USBR 1012 - 89

Manufacturer Example Model No. SI Serial No. 100A

Type of balance or scale: Mechanical ☐ Electrical ☒ Other ____

Nominal capacity 3,000 grams Sensitivity 0.01 grams

Zero-balance reading 0.00 grams Date of calibration of precision mass standards 1/8/89

Calibration performed by Example Date 2/15/89

Calibration checked by Example Date 2/15/89

Trial (1)	Mass of precision mass standard (2) ☒ grams ☐ pounds	Balance or scale reading (3)	Error (4) = (2) − (3)	% Error (5) = $\frac{(4)}{(2)}$ x 100
1	0	0.00	0	0
2	750	750.73	−0.73	−0.10
3	1500	1500.99	−0.99	−0.07
4	2250	2250.89	−0.89	−0.04
5	3000	2999.96	0.04	0.001

REMARKS

Balance is acceptable.

GPO 848 - 600

Figure 1. – Balance or scale calibration — example.

UNITED STATES DEPARTMENT OF THE INTERIOR
BUREAU OF RECLAMATION

USBR 1020-89

PROCEDURE FOR

CALIBRATING OVENS

INTRODUCTION

This procedure is under the jurisdiction of the Geotechnical Services Branch, code D-3760, Research and Laboratory Services Division, Denver Office, Denver, Colorado. The procedure is issued under the fixed designation USBR 1020. The number immediately following the designation indicates the year of acceptance or the year of last revision.

1. Scope

1.1 This designation outlines the procedure for calibrating ovens used for standard laboratory testing. This calibration procedure is limited to ovens operating to a maximum temperature of 300 °C. Ovens operating at higher temperatures require special handling and, therefore, should be periodically checked by the manufacturer.

1.2 This procedure is to be used for periodic checks of laboratory ovens. If stringent calibration tolerances are required, this procedure should not be used and ASTM designation: E 145 is to be consulted.

2. Applicable Documents

2.1 *ASTM Standard*:
E 1 ASTM Thermometers
E 145 Specification for Gravity-Convection and Forced-Ventilation Ovens

3. Summary of Method

3.1 A thermometer is placed in an oven which is set at the desired operating temperature. The temperature reading of the thermometer is compared to the oven thermostat reading. The appropriate thermostat adjustment is determined.

4. Significance and Use

4.1 Accurate temperature control is important for many soil testing procedures in order to obtain accurate results.

4.2 Ovens are used primarily for determination of moisture content in soils. The ovens should have minimum inside dimensions of 3 feet wide by 2 feet deep by 2 feet high. For most soils laboratory application ovens should be thermostatically controlled at 110±5 °C. Since it is necessary that a uniform temperature be maintained throughout the oven, the mechanical convection or forced-draft ovens are recommended.

NOTE 1.–Ovens slightly smaller than the recommended size may be used, but oven temperature varies significantly when the door is opened, and calibration will be more difficult.

4.3 This calibration procedure is to be performed upon receipt of the oven and annually thereafter.

5. Apparatus

5.1 *Oven.*–An oven, thermostatically controlled, forced-draft or mechanical convection, horizontal air flow type.

5.2 *Thermometer.*–Etched stem glass thermometer with eye-hook at the end for hanging, 0 to 300 °C, 2 °C divisions, mercury filled, conforming to the requirements of ASTM E 1.

5.3 *Gloves.*–Asbestos, 1 pair, to be used whenever handling equipment heated to elevated temperatures.

6. Precautions

6.1 *Safety Precautions*:

6.1.1 All electrical wires and cords are to be checked for damage. If any damage is observed, it is to be repaired before attempting to use the oven.

6.1.2 Care should be exercised in handling any equipment that is heated to elevated temperatures. Gloves are to be worn whenever handling such equipment or materials.

7. Calibration and Standardization

7.1 Verify that the thermometer to be used for this procedure has a certificate of inspection or calibration verification from the manufacturer. If there is doubt as to the accuracy of the thermometer, it should not be used for this procedure; a thermometer with a verifiable accuracy is to be obtained and used.

8. Conditioning

8.1 During the calibration procedure, the room temperature should not vary more than ±10 °C.

9. Procedure

9.1 All data are to be recorded on the "Oven Calibration" form as shown on figure 1.

9.2 Locate and record the serial number, or any other identifying markings, of the oven to be calibrated.

9.3 Remove any material (sample containers, pans, etc.) from the oven.

9.4 Carefully hang the thermometer by its eye-hook with a piece of wire as close to the center of the oven chamber as possible. Make sure that the thermometer hangs freely.

9.5 Determine the applicable temperature at which the oven will be calibrated and set the thermostat of the oven to that temperature.

NOTE 2.–For most geotechnical purposes, the oven will be calibrated at 110 °C. If calibration is desired at another temperature, the procedure is similar. If a range of calibrated temperatures is desired, the calibration should be performed in intervals of 5 °C over the desired range of temperatures.

9.6 Allow sufficient time for the oven temperature to stabilize and record the oven thermostat reading.

9.7 Determine the thermometer reading and record the value.

NOTE 3.–The oven temperature will drop drastically when the oven door is opened. The thermometer reading should be taken as quickly as possible once the door is opened.

9.9 Calculate the thermostat correction and record the value.

9.10 If the thermometer reading is within ±5 °C of the thermostat reading, the calibration procedure is completed. If the thermometer reading differs from the thermostat reading by more than 5 °C, or if a more stringent calibration is desired, see subparagraph 1.2.

9.11 Adjust the thermostat by the amount of the thermostat correction.

9.12 Repeat subparagraphs 9.6 through 9.11 until the desired calibration accuracy has been achieved.

10. Calculations

10.1 Calculate the thermostat correction using the following expression:

Thermostat correction = (1) – (2)

where:

(1) = oven thermostat reading
(2) = thermometer reading

11. Report

11.1 The report is to consist of a completed and checked "Oven Calibration" form (fig. 1).

11.2 All calculations are to show a checkmark.

7-2306 (6-85)
Bureau of Reclamation

OVEN CALIBRATION

Designation USBR 1020 - 89

Oven Identification Model 1206 SN 36157

Calibration Temperature or Temperature Range 110 ☒ °C ☐ °F

Calibration performed by Example Date 3-24-89

Calibration checked by Example Date 3-24-89

OVEN THERMOSTAT READING (1)	THERMOMETER READING (2)	THERMOSTAT CORRECTION (1) – (2)
110° C	116° C	-6° C
104° C	110° C	0

COMMENTS: _____

GPO 847-971

Figure 1. - Oven calibration — example.

UNITED STATES DEPARTMENT OF THE INTERIOR
BUREAU OF RECLAMATION

USBR 1025-89

PROCEDURE FOR
CHECKING SIEVES

INTRODUCTION

This procedure is under the jurisdiction of the Geotechnical Services Branch, code D-3760, Research and Laboratory Services Division, Denver Office, Denver, Colorado. This procedure is issued under the fixed designation USBR 1025. The number immediately following the designation indicates the year of acceptance or the year of last revision.

1. Scope

1.1 This designation outlines the procedure for checking sieves used in laboratory gradation analysis procedures. This procedure can be used for checking both wire cloth and perforated-plate sieves. The sieves shall conform to ASTM specifications E-11 for wire-cloth sieves and E-323 for perforated plate sieves.

1.2 Four methods are discussed to check the conformance of sieves. More than one method may apply for the same sieve as outlined.

(a) Method A describes the procedure for checking wire cloth sieves having apertures as large as 4.75 mm (No. 4) and as small as 38 μm (No. 400) using a "sieve inspector" which is a mechanical device using dial indicators or linear variable differential transformers (LVDTs) to make linear measurements as shown on figure 1.

NOTE 1.–The sieve inspector shown on figure 2 can be adapted to use LVDTs and a computer to facilitate wire diameter and aperture dimension measurements. Information concerning these adaptations can be obtained by contacting the Bureau's Geotechnical Services Branch, code D-3760, Denver Office, Denver, Colorado.

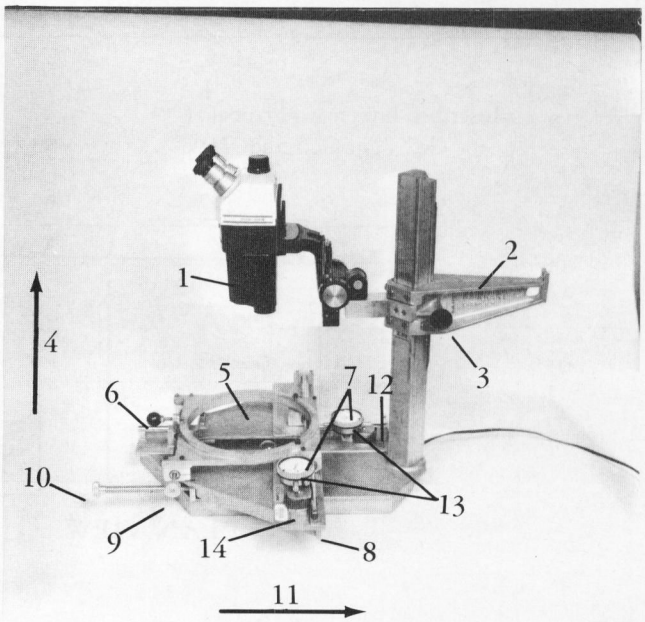

NOTE: Sieve inspector is adaptable to various sieves and other linear measurement devices.

Figure 1. – Sieve inspector with dial indicators. 1) monocular microscope, 2) microscope support arm, 3) microscope adjustment knob, 4) warp direction, 5) stage, 6) locking bolt, 7) bezel, 8) guide rail, 9) warp adjustment knob, 10) shoot adjustment knob, 11) shoot direction, 12) guide rail, 13) dial indicator, and 14) magnetic holders.

(b) Method B describes the procedure for checking wire-cloth sieves having apertures from 9.5 mm (3/8-in) to 100 mm (4 in) using plug gauges and a linear measurement device, see figure 3.

(c) Method C describes the procedure for checking wire-cloth sieves having apertures from 2.36 mm (No. 8) to 150 mm (6 in) using a linear measurement device (fig. 3).

(d) Method D describes the procedure for checking perforated-plate sieves having apertures from 4.75 mm (No. 4) to 150 mm (6 in) using a linear measurement device (fig. 3).

2. Auxiliary Tests

2.1 Dial indicators or LVDTs used to measure aperture dimensions and wire diameters of sieves (method A) must be calibrated in accordance with USBR 1007 or 1008 respectively, prior to performing this procedure.

2.2 Plug gauges used to check aperture dimensions of sieves (method B) are to comply with specifications given in table 1.

2.3 Vernier or dial calipers (linear measurement devices) used to measure aperture dimensions and wire diameters of sieves (methods B, C, and D) must conform to requirments specified in USBR 1000 prior to performing this procedure.

3. Applicable Documents

3.1 *USBR Procedures*:
USBR 1000 Standards for Linear Measurement Devices

Table 1. - Plug gauges — plug gauge dimensions.

Sieve designation Standard millimeter	Alternative inch	A in	B in	C in	D in	E in	ϕ	Threads	Handle	Allowable dimensions Minimum "Go" mm	Maximum "No-Go" mm	Maximum individual opening "max" mm	Maximum not more than 5% mm
9.5	⅜	2.00	0.15	½	0.3550	0.4043	1° - 25′	6 - 32 - NC	⅜-in Hex. × 2-¾ in	9.20	9.80	10.16	9.97
12.5	½	2.50	0.15	½	0.4625	0.5375	1° - 43′	6 - 32 - NC	⅜-in Hex. × 2-¾ in	12.11	12.89	13.31	13.10
16.0	⅝	3.00	0.20	½	0.5686	0.6814	2° - 9′	10 - 24 - NC	⅜-in Hex. × 2-¾ in	15.5	16.5	17.0	16.7
19.0	¾	3.00	0.20	½	0.6825	0.8175	2° - 35′	10 - 24 - NC	⅜-in Hex. × 2-¾ in	18.4	19.6	20.1	19.9
22.4	⅞	3.00	0.20	½	0.7962	0.9537	3° - 0′	10 - 24 - NC	⅜-in Hex. × 2-¾ in	21.7	23.1	23.7	23.4
25.0	1	3.00	0.25	½	0.9100	1.0900	3° - 26′	¼ - 20 - NC	⅜-in Hex. × 2-¾ in	24.2	25.8	26.4	26.1
31.5	1-¼	3.00	0.25	½	1.1600	1.3400	3° - 26′	¼ - 20 - NC	½-in Hex. × 3 in	30.5	32.5	33.2	32.9
38.1	1-½	3.00	0.25	¾	1.4100	1.5900	3° - 26′	¼ - 20 - NC	½-in Hex. × 3 in	36.8	38.6	39.5	39.1
45.0	1-¾	3.00	0.25	¾	1.6450	1.8551	3° - 45′	¼ - 20 - NC	½-in Hex. × 3 in	43.6	46.4	47.4	46.9
50.0	2	3.00	0.25	¾	1.8800	2.1200	4° - 34′	¼ - 20 - NC	½-in Hex. × 3 in	48.5	51.5	52.6	52.1
63.0	2-½	3.00	0.25	¾	2.3500	2.6500	5° - 44′	¼ - 20 - NC	½-in Hex. × 3 in	61.1	64.9	66.2	65.6
75.0	3	3.00	0.30	¾	2.8200	3.1800	6° - 52′	¼ - 20 - NC	½-in Hex. × 3 in	72.8	77.2	78.7	78.1
90.0	3-½	3.00	0.30	¾	3.3070	3.7800	9° - 0′	¼ - 20 - NC	½-in Hex. × 3 in	87.3	92.7	94.4	93.6
100.0	4	3.00	0.30	¾	3.7600	4.2400	9° - 9′	¼ - 20 - NC	½-in Hex. × 3 in	97.0	103.0	104.8	104.0

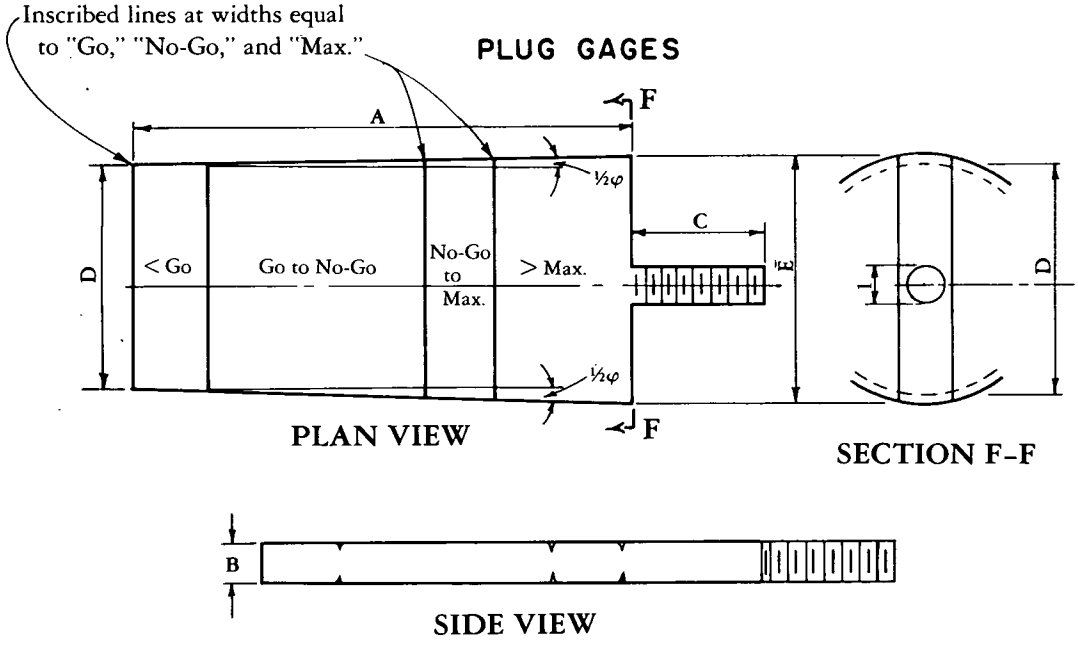

Material:
High carbon or alloy steel to be hardened before final grinding.

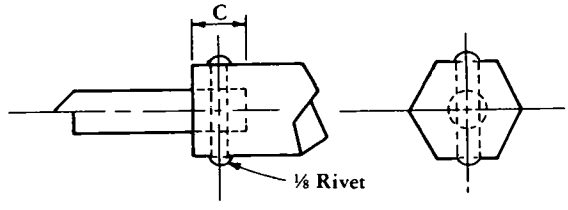

Alternate method of attaching handles on smaller size gauges

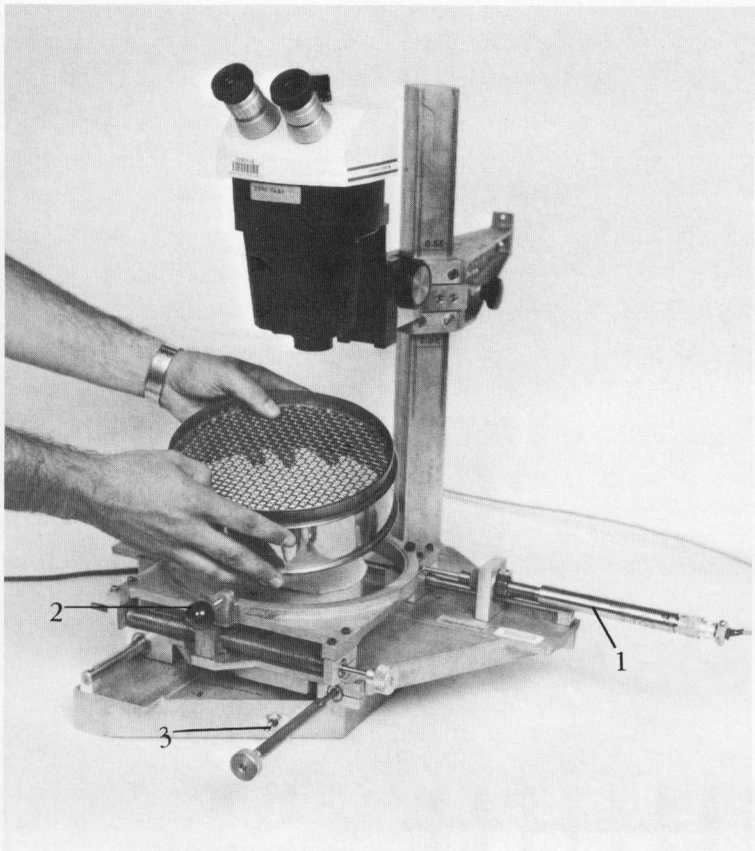

Figure 2. – Placing an 8-inch-diameter brass sieve on a sieve inspector having LVDTs. 1) LVDT, 2) locking bolt, and 3) light switch.

USBR 1007 Calibrating Dial Indicators
USBR 1008 Calibrating Linear Variable Differential Transformers
USBR 3900 Standard Definitions of Terms and Symbols Relating to Soil Mechanics

3.2 *ASTM Standards*:
E 11 Standard Specification for Wire-Cloth Sieves for Testing Purposes
E 323 Standard Specification for Perforated-Plate Sieves for Testing Purposes

3.3 *Federal Specification*:
GGG-C-111B Calipers and Gages, Vernier

4. Significance and Use

4.1 Permeability, compressibility, and shear strength of a soil mass are influenced by the percentage of various particle sizes present in the soil mass. In order to obtain an accurate, quantitative measure of the distribution of particle sizes, sieves meeting standard nominal dimensions must be used.

4.2 This procedure is to be performed upon receipt of the sieves, at least annually thereafter, and before use after repairs or other occurrences which may affect test results significantly—and whenever test results are questionable.

5. Precautions

5.1 *Safety Precautions*: Care should be exercised while handling sieves to avoid possible injury from sharp edges or protrusion on the sieve.

5.2 *Technical Precautions*: Periodically, check the sieves visually for tears or breaks in the wire cloth.

6. Terminology

6.1 Definitions are in accordance with USBR 3900.

6.2 Terms not included in USBR 3900 specific to this designation are:

6.2.1 *Aperture.*–The opening or hole between parallel wires in a sieve.

6.2.2 *Warp.*–Direction of travel across the sieve parallel to one set of wires as shown on figure 4.

6.2.3 *Shoot.*–Direction of travel from top to bottom and perpendicular to the warp as shown on figure 4.

6.2.4 *Sieve.*–An instrument with a frame and wire-cloth or perforated bottom used for separating coarse from fine parts of loose matter.

6.2.5 *Stage.*–The apparatus on the sieve inspector which holds the sieve and moves in the X and Y (warp and shoot) direction.

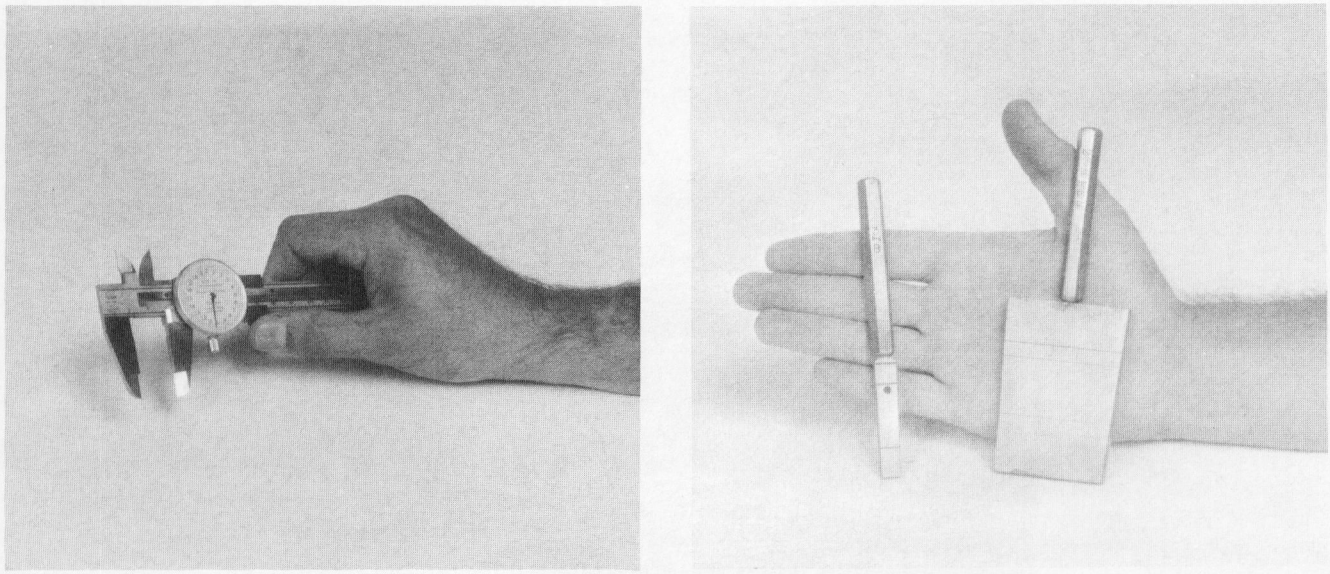

(a) Linear measurment device capable of measuring to the nearest 0.02 mm.

(b) Plug gauges.

Figure 3. – Linear measurement device and plug gauge.

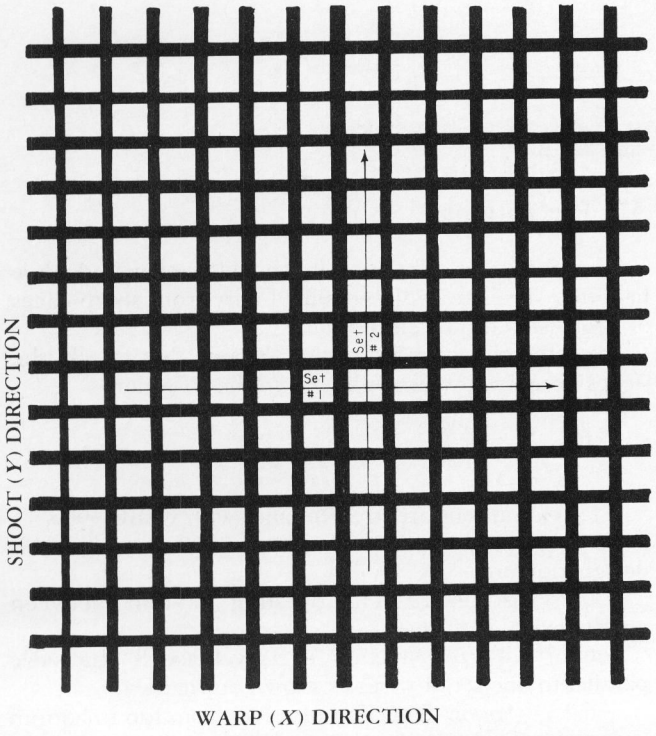

Figure 4. – Sieve measuring pattern for two sets (not mandatory pattern).

6.2.6 *Bridgewidth.*–The distance between the nearest edges of two adjacent apertures in a perforated plate.

6.2.7 *Pitch.*–The distance between the centers of two adjacent apertures in a perforated plate.

6.2.8 *Field.*–The area, usually circular, in which the image is rendered by the lens system of the optical instrument.

6.2.9 *Set.*–A number of apertures and wires measured and grouped together as one.

METHOD A

Checking Wire-Cloth Sieve Using a Sieve Inspector (Optical Linear Measurements With Dial Indicators)

7. Summary of Method — Method A

7.1 Method A is used to check sieves having aperture dimensions from 38-μm (No. 400) to a 4.75 mm (No. 4). Perform a visual inspection of the sieve. Place the sieve in the sieve inspector and check a minimum of 10 sets of 10 aperture dimensions and wire diameters. Five sets are checked in the warp X direction and five sets are checked in the shoot Y direction (fig. 4). Sieve aperture dimensions and wire diameters are measured using dial indicators attached to the sieve inspector. Average sieve aperture dimensions are calculated for both the warp X and shoot Y directions and compared to maximum and minimum nominal dimensions for standard test sieves. Average wire diameters are calculated for both the warp X and shoot Y directions and are compared to maximum and minimum allowable diameters. The percent of sieve aperture dimensions larger than specified is calculated, and the largest sieve opening is determined. A decision to accept or reject the sieve for laboratory use is based on the sieve meeting specified dimensions.

8. Apparatus — Method A

8.1 *Sieve Inspector.*–A sieve inspector is shown on figure 1.

8.1.1 The sieve inspector is a mechanical device which can be used to measure the distance between points on an object mounted to the manually driven $X - Y$ stage. Movement of the $X - Y$ stage is measured directly by dial indicators mounted parallel to the X and Y axis of the stage. A sieve is mounted on the stage and backlighted. The stage can be moved independently along either the X-axis (warp direction) or along the Y-axis (shoot direction) by means of drive screws moving on stationary half-nuts. The surface of the sieve is observed through a vertically mounted microscope. Crosshairs in the microscope are used to locate measurement points on the sieve. A wide range of sieve sizes can be accurately measured in either system of units by selecting SI (International System of Units) or inch-pound (units) dial indicators of appropriate sensitivity and having sufficient travel to span at least one aperture dimension and wire diameter. A rack and pinion driven microscope support overarm is moved vertically on the column to focus on the wire-cloth. Easily positioned magnetic dial indicator holders facilitate zeroing the dial indicators for direct measurement and will break away if over travel occurs. Rapid traverse of either X or Y axis is provided by lifting either drive screw out of its half-nut and sliding the stage to the new location.

The sieve inspector is adaptable to check a 17- by 25-inch frame with a Gilson™ sieve as shown on figure 5. The sieve mounting bracket is used to place the Gilson™ sieve on the sieve inspector. The microscope pivoting arm allows the microscope to reach all apertures on the sieve.

9. Calibration and Standardization — Method A

9.1 Verify that dial indicators have been calibrated in accordance with USBR 1007. If the calibration is not current, perform the calibration before using the dial indicators for this procedure.

10. Conditioning — Method A

10.1 Prior to performing this procedure, place the sieve inspector and sieves in the same environment in which they are to be checked for several hours until their temperatures are approximately the same.

11. Procedure — Method A

11.1 All data are to be recorded on the "Checking Wire-Cloth Sieve" form as shown on figure 6.

11.2 Place the sieve inspector on a level and sturdy table. Plug the light cord into a power outlet.

11.3 Record the sieve size in both SI and inch-pound units. Also record the sieve control number, if applicable, as shown on figure 6.

11.4 Visually examine the sieve — preferably with a magnifying glass, for any tears, excessive wear, and/or wire displacement. If—upon completion of the visual inspection—flaws are not apparent or if suitable repairs are made, check the accepted box; if not, check the rejected box. The sieve, if rejected, shall be discarded.

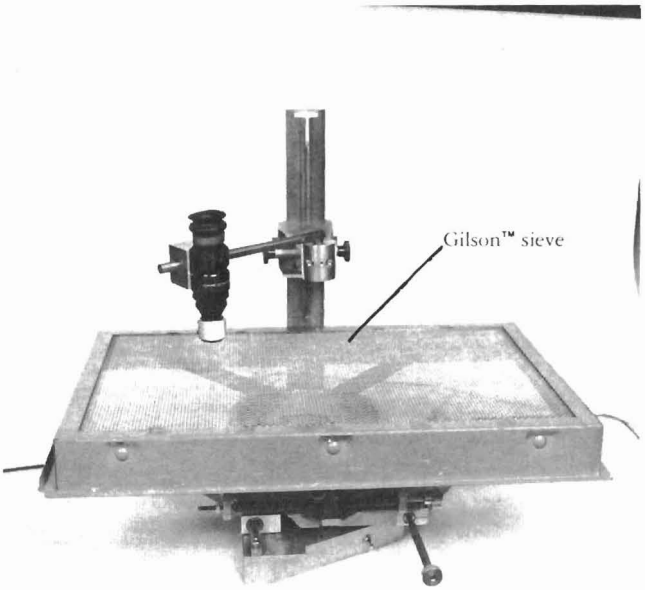

(a) Placement of Gilson™ sieve in sieve inspector.

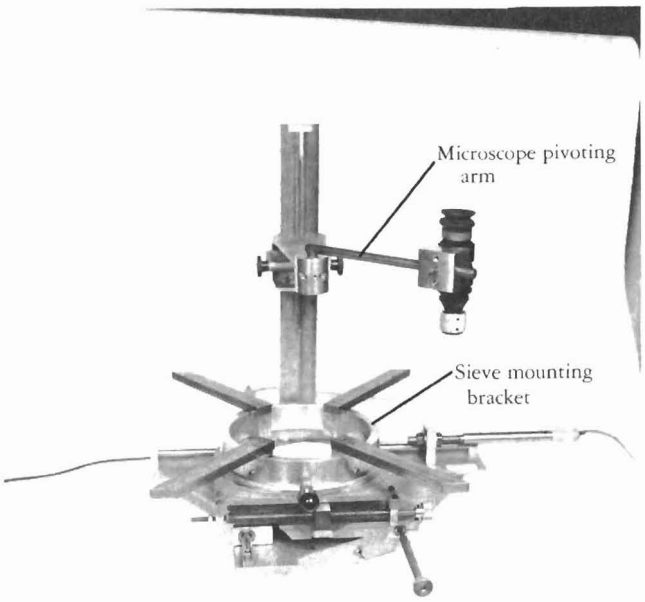

(b) Sieve mounting bracket used to accommodate Gilson™ sieve.

Figure 5. – Adapting the sieve inspector to calibrate the Gilson™ sieve.

7-2396 (1-87)
Bureau of Reclamation

CHECKING WIRE-CLOTH SIEVE

Designation USBR 1025 - 89

PROJECT: EXAMPLE | FEATURE | LAB. LOCATION

CALIBRATION PERFORMED BY | DATE | CALIBRATION CHECKED BY | DATE

Sieve Size 4 No. ____ inches 4.75 mm

Visual Inspection: ☒ Accepted ☐ Rejected

Sieve Control No. A

Wire Diameter (mm)						Aperture Dimension (mm)				
Direction & Set No.	Reading No.	Initial Reading	Final Reading	Wire Diameter X	Wire Diameter Y	Reading No.	Initial Reading	Final Reading	Aperture Dimension X	Aperture Dimension Y
1(X)	1	0.00	1.54	1.54		1	1.54	6.29	4.75	
	2	6.29	7.87	1.58		2	7.87	12.55	4.68	
	3	12.55	14.09	1.54		3	14.09	18.97	4.88	
	4	18.97	20.53	1.56		4	0.00	4.73	4.73	
	5	4.73	6.30	1.57		5	6.30	11.17	4.87	
	6	11.17	12.72	1.55		6	12.72	17.47	4.75	
	7	17.47	18.99	1.52		7	0.00	4.83	4.83	
	8	4.83	6.39	1.56		8	6.39	11.25	4.86	
	9	11.25	12.78	1.53		9	12.78	17.59	4.81	
	10	17.59	19.16	1.57		10	0.00	4.85	4.85	
2(Y)	1	0.00	1.54		1.54	1	1.54	6.29		4.75
	2	6.29	7.84		1.55	2	7.84	12.59		4.75
	3	12.59	14.12		1.53	3	14.12	19.00		4.88
	4	19.00	20.54		1.54	4	0.00	4.85		4.85
	5	4.85	6.38		1.53	5	6.38	11.26		4.88
	6	11.26	12.80		1.54	6	12.80	17.61		4.81
	7	17.61	19.51		1.54	7	0.00	4.86		4.86
	8	4.86	6.39		1.53	8	6.39	11.24		4.85
	9	11.24	12.76		1.52	9	12.76	17.59		4.83
	10	17.59	19.14		1.55	10	0.00	4.79		4.79

	Allowable min	Allowable max	Measured X	Measured Y
Average Wire Diameter (mm)	1.46	1.62	1.55	1.54
Average Aperture (mm)	4.60	4.90	4.80	4.83
Largest Aperture (mm)		5.14	4.88	4.88
5 % of Apertures can exceed		5.02 (mm)	0 %	

Remarks: Only partial sieve checking data shown.

Accepted ☒
Rejected ☐

SHEET ____ OF ____

Figure 6. - Checking wire-cloth sieve — using sieve inspector — example.

11.5 Select the appropriate lens for the microscope to achieve the specified magnification, table 2. The lens selection is based on the field diameter dimensions allowing approximately 4 wire diameters and 4 aperature dimensions in the field of vision.

Table 2. – Lens sizes.

Sieve size	Lens
No. 4 through No. 40	0.5X
No. 40 through No. 200	2X

NOTE 2.–The sieve inspector can be used to check sieves larger than 4.75 mm (No. 4) if the lens and focal point are adjusted. Also, dial indicators will need to be adapted to allow measurement of one wire diameter with one adjacent aperture dimension. It is recommended that a plug gauge or linear measurement device be used for sieves larger than 4.75 mm (No. 4).

11.6 Secure the lens selected in subparagraph 11.5 into the lower end of the microscope.

11.7 Select appropriate dial indicators to achieve the specified range and accuracy, table 3.

Table 3 – Dial indicator selection.

Sieve size	Dial range
Larger than No. 6	25 mm travel × 0.01 mm/division
No. 6 or smaller	5 mm travel × 0.0002 mm/division

11.8 Secure the dial indicators selected in subparagraph 11.7 onto the sieve inspector as shown on figure 1.

11.9 Turn on the light of the sieve inspector.

NOTE 3.–When checking a Gilson™ sieve, attach the appropriate fixtures as shown on figure 5 before mounting the sieve.

11.10 Invert the sieve and place it on the backlighted stage such that the wires run in the warp *X* and shoot *Y* directions.

11.11 Focus the microscope by turning the adjustment knob on the microscope support overarm along with selecting the proper magnification setting located on top of the microscope.

11.12 Align the crosshairs of the microscope with the wires of the sieve. Verify that the sieve is set inplace properly by turning the warp adjustment knob. The warp wires should move parallel with one crosshair during movement of the stage in the warp direction. The shoot wires should move parallel with the other crosshair during movement of the stage in the shoot direction. Adjust the sieve as needed to align the wires with the crosshairs. Tighten the locking bolt located on the front of the stage, as necessary, to secure the sieve in place. Take care not to overtighten the bolt; it could deform the sieve frame.

11.13 Locate a minimum of 10 sets—each containing 10 aperture dimensions and wire diameters—as shown on figure 7. Five sets will run in the warp *X* direction and five sets will run in the shoot *Y* direction. The sets should be selected to uniformly cover the entire surface of the sieve or wherever excessive wear is shown. If there are fewer than 100 apertures in the sieve, check all apertures.

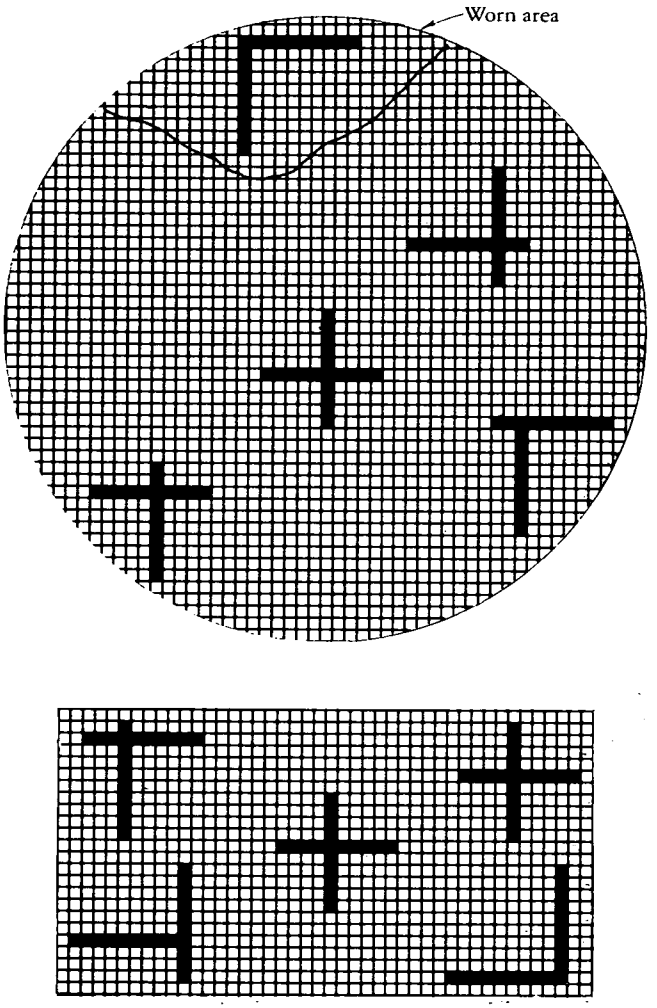

Figure 7. – Appproximate location of aperture sets on the sieve surface.

If 10 sets of 10 apertures and wire diameters cannot be located, then randomly select 100 apertures and wire diameters, 50 in the warp *X* direction and 50 in the shoot *Y* direction to evenly represent the sieve.

11.14 Set the position of the crosshairs of the microscope so they are diagonal to the axes of the wire mesh as shown at the top of figure 8.

11.15 Adjust the position of the stage so the crosshairs coincide with the center of the left edge of the wire (right side of aperture) running in the shoot *Y* direction — shown as location 1 on figure 8.

11.16 Slide the magnetic holder for the warp direction dial gauge along its guide rail until the dial indicator registers near zero. Rotate the bezel to read 0.00 and record as *Initial reading* in the "Wire Diameter" section (fig. 6).

11.17 Move the stage of the sieve inspector by turning the warp adjustment knob until the crosshairs coincide with a point directly across the wire from position 1 — shown as position 2 on figure 8.

11.18 Read and record the dial indicator reading as *Final reading* in the "Wire Diameter" section (fig. 6).

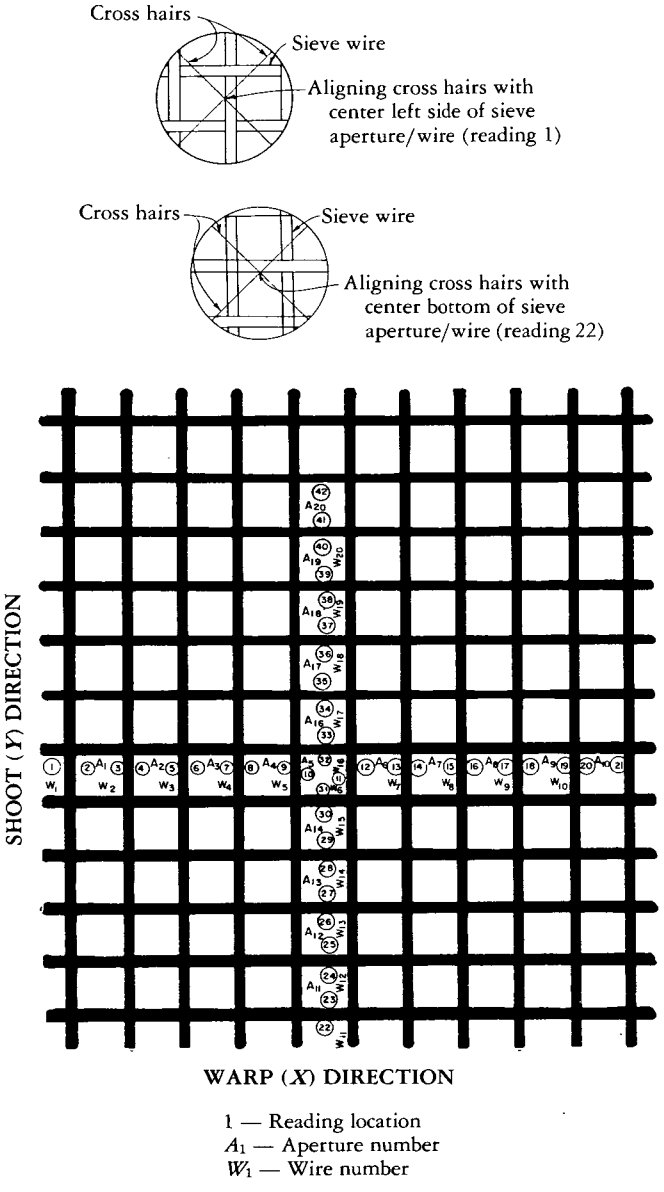

Figure 8. – Sequence of aperture dimension and wire diameter readings for one set.

11.19 Record the dial indicator reading obtained in subparagraph 11.18 as *Initial reading* in the "Aperture Dimension" section (fig. 6).

11.20 Move the stage along the warp axis until the crosshairs coincide with a point directly across the sieve aperture from position 2 — shown as position 3 on figure 8. Read and record the dial indicator as *Final reading* in the "Aperture Dimension" section (fig. 6).

11.21 Record the dial indicator reading obtained in subparagraph 11.20 as *Initial reading* in the "Wire Diameter" section (fig. 6).

11.22 As necessary, slide the magnetic holder for the warp direction dial gauge along its guide rail until the dial indicator registers nearly zero. Rotate the bezel to 0.00 and record in the appropriate column.

11.23 Repeat subparagraph 11.17 through 11.22 using the appropriate positions (shown on figure 8) until one set containing a minimum of 10 wire diameters and 10 aperture dimensions has been measured.

11.24 Adjust the position of the stage so that the crosshairs coincide with position 22 at the center of the bottom edge of the bottom wire (top of aperture) running in the shoot Y direction, of set 2 — shown as position 22 on figure 8.

11.25 Slide the magnetic holder for the shoot direction dial gauge along its guide rail until the dial indicator registers nearly zero. Rotate the bezel to 0.00 and record as *Initial reading* in the "Wire Diameter" section (fig. 6).

11.26 Move the stage of the sieve inspector by turning the shoot adjustment knob until the crosshairs coincide with a point directly across the wire from position 22 — shown as position 23 on figure 8.

11.27 Read and record the dial indicator reading as *Final reading* in the "Wire Diameter" section (fig. 6).

11.28 Record the dial indicator reading obtained in subparagraph 11.27 as *Initial reading* in the "Aperture Dimension" section (fig. 6)

11.29 Move the stage along the shoot axis until the crosshairs coincide with a point directly across the aperture from position 23 — shown as position 24 on figure 8. Read and record the dial indicator as *Final reading* in the "Aperture Dimension" section (fig. 6).

11.30 Record the dial indicator reading obtained in subparagraph 11.29 as *Initial reading* in the "Wire Diameter" section (fig. 6).

11.31 As necessary, slide the magnetic holder for the warp direction dial gauge along its guide rail until the dial indicator registers nearly zero. Rotate the bezel to 0.00 and record in the appropriate column.

11.32 Repeat subparagraphs 11.26 through 11.31 using the appropriate position (shown on figure 8) until the second set containing a minimum of 10 wire diameters and 10 aperture dimensions has been measured. Movement of the crosshairs during measurements, for each set, should follow the sequence shown on figure 8; however the exact position of the sets may vary.

11.33 Repeat subparagraphs 11.15 through 11.32 until a minimum of 10 sets, 5 sets running in the warp X direction and 5 sets running in the shoot Y direction, have been checked (see subpar. 11.13).

11.34 Obtain the following values from table 4 and record as shown on figure 6:

- Average wire diameter limits
- Average aperture dimension limits
- Largest allowable aperture dimension
- Aperture dimension of which 5 percent of the measured apertures can exceed

NOTE 4.–If table 4 does not list the tolerances needed for a certain size sieve, refer to appendix X1, table X1.1.

11.35 Calculate and record to the nearest 0.01 mm, the average aperture dimension and average wire diameter in both the warp X and shoot Y directions as shown on figure 6.

11.36 Locate and record to the nearest 0.01 mm the largest sieve aperture dimension in both the warp X and shoot Y direction as shown on figure 6.

Table 4.-Wire-cloth sieves for testing purposes — standard specifications.

Sieve size		Wire diameter			Aperture dimension			
		Average		Nominal	Average		Largest	5% can
		minimum	maximum		minimum	maximum	allowable	exceed
mm	inch	mm	mm	mm	mm	mm	mm	mm
150	6	9.50	10.50	10.0	145.6	154.4	157.0	156.0
125	5	7.60	8.40	8.00	121.3	128.7	130.9	130.0
90	3-½	5.78	6.38	6.08	87.3	92.7	94.4	93.6
75	3	5.51	6.09	5.80	72.8	77.2	78.7	78.1
63	2-½	5.23	5.78	5.50	61.1	64.9	66.2	65.6
50	2	4.80	5.30	5.05	48.5	51.5	52.6	52.1
45	1-¾	4.61	5.09	4.85	43.6	46.4	47.4	46.9
37.5	1-½	4.36	4.82	4.59	36.4	38.6	39.5	39.1
31.5	1-¼	4.02	4.44	4.23	30.5	32.5	33.2	32.9
25.0	1	3.61	3.99	3.80	24.2	25.8	26.4	26.1
22.4	7/8	3.33	3.68	3.50	21.7	23.1	23.7	23.4
19.0	3/4	3.14	3.47	3.30	18.4	19.6	20.1	19.9
11.2	7/16	2.33	2.57	2.45	10.85	11.55	11.94	11.75
16.0	5/8	2.85	3.15	3.00	15.5	16.5	17.00	16.7
9.50	3/8	2.16	2.38	2.27	9.20	9.80	10.16	9.97
8.00	5/16	1.97	2.17	2.07	7.75	8.25	8.58	8.41
4.75	No. 4	1.46	1.62	1.54	4.60	4.90	5.14	5.02
4.00	No. 5	1.30	1.44	1.37	3.87	4.13	4.35	4.23
2.36	No. 8	0.95	1.05	1.00	2.280	2.440	2.600	2.515
2.00	No. 10	.855	0.945	0.900	1.930	2.070	2.215	2.135
1.18	No. 16	.618	.683	.650	1.135	1.225	1.330	1.270
600 μm	No. 30	.361	.419	.390	575 μm	625 μm	695 μm	660 μm
425 μm	No. 40	.268	.312	.290	406 μm	444 μm	502 μm	471 μm
300 μm	No. 50	.199	.231	.215	286 μm	314 μm	363 μm	337 μm
150 μm	No. 100	.102	.118	.110	142 μm	158 μm	192 μm	174 μm
75 μm	No. 200	.0477	.0583	.053	70 μm	80 μm	103 μm	091 μm
45 μm	No. 325	.027	.033	.030	42 μm	48 μm	66 μm	57 μm

Note: If table 4 does not list the sieve size needed, refer to appendix X1, table X1.1.

11.37 Calculate and record to the nearest one percent the percentage of apertures greater than the allowable limit as shown on figure 6.

12. Calculations — Method A

12.1 Calculate the wire diameters and aperture dimensions using the following expression:

Wire diameter or aperture dimension = final reading - initial reading

12.2 Calculate the average aperture dimension in both the warp X and shoot Y direction for the entire sieve.

$$A_a = \frac{a_1 + a_2 + a_3 \ldots + a_n}{N_a} \quad (1)$$

where:

A_a = average aperture dimension in either the X or Y direction, mm

a_1, a_2, a_3, and a_n = measured sieve aperture dimension in either the X or the Y direction, mm

N_a = total number of aperture measurements in either the X or Y direction

12.3 Calculate the measured percentage of aperture dimensions greater than the allowable percentage (5% of apertures can exceed) for the entire sieve.

$$\% \text{ Greater} = 100 \left(\frac{A}{N} \right) \quad (2)$$

where:

A = number of aperture measurements greater than the limit

N = total number of aperture measurements for sieve

100 = convert from decimal to percent

12.4 Calculate the average wire diameter in both the warp X and shoot Y direction for the entire sieve.

$$W_a = \frac{w_1 + w_2 + w_3 \ldots + w_n}{N_w} \quad (3)$$

where:

W_a = average wire diameter in either the X or Y direction, mm

w_1, w_2, w_3, and w_n = measured individual wire diameters in either the X or Y direction, mm

N_w = total number of wire diameter measurements in either the X or Y direction

13. Interpretation of Results — Method A

13.1 The sieve will be accepted if the following criteria are met:

- The visual inspection is acceptable
- The average wire diameter, of the warp X and shoot Y directions (taken seperately), falls within the specified limits

- The average aperture dimension, in both the warp X and shoot Y direction, is within the specified limits
- The largest measured aperture dimension is less than the specified limit
- The percentage of measured aperture dimensions greater than the specified limit is 5 percent or less

13.2 If the criteria in subparagraph 13.1 are met, check the accepted box; if not, check the rejected box. If the sieve is rejected and cannot be repaired, it should be discarded.

14. Report — Method A

14.1 The report is to consist of a completed and checked "Checking Wire-Cloth Sieve" form (fig. 6).

14.2 All calculations are to show a checkmark.

METHOD B
Checking Wire-Cloth Sieve Using a Plug Gauge and Linear Measurement Device

15. Summary of Method — Method B

15.1 Method B is used to check sieves having aperture dimensions from 9.5 mm (3/8-in) to 100-mm (4-in). Perform a visual inspection of the sieve. Check a minimum of 10 sets of 10 aperture dimensions and wire diameters. Five sets are checked in the warp X direction and five sets are checked in the shoot Y direction (fig. 4). A plug gauge is used to check aperture dimensions against required "go/no go" criteria. A linear measurement device is used to measure wire diameters adjacent to the apertures. Average wire diameters are calculated for both the warp X and shoot Y directions and compared to maximum and minimum allowable diameters. Aperture dimensions are checked for allowable oversize and maximum aperture dimension. A decision to accept or reject the sieve for laboratory use is based on the sieve meeting specified dimensions.

16. Apparatus — Method B

16.1 *Plug Gauges.*–A set of plug gauges (fig. 3), conforming to the requirements in table 1, and a schematic is shown on figure 9. Each plug gauge is inscribed with three parallel lines at blade widths corresponding to—in order of increasing dimension—the "go" dimension, the "no-go" dimension, and the "max." dimension. Thus inscribed, the face of the blade is divided into four regions. The regions—in order of increasing blade width—are referred to as the "< go" region, the "go to no-go" region, the "no-go to max." region, and the "> max." region. When the plug gauge is inserted into an aperture in a sieve, the dimension of the aperture can be visually classified into one of the four regions. For most soil and concrete laboratory applications, plug gauges are required for the following sieve sizes: 9.5-, 19.0-, 37.5-, 75-mm, (3/8-, 3/4-, 1-1/2-, and 3-inch, respectively).

16.2 *Linear Measurement Devices.*–A vernier or dial caliper (fig. 3) used to measure the wire diameters. The linear measurement device is to meet requirements of Federal Specifications GGG-C-111B, and conform to any additional requirements specified in USBR 1000.

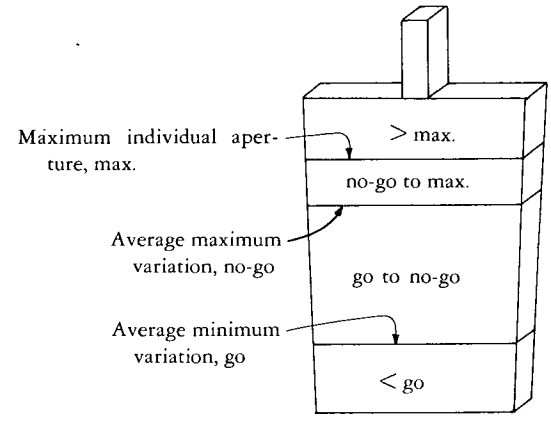

Figure 9. – Plug gauge schematic.

17. Calibration and Standardization — Method B

17.1 Initially (when received) verify that plug gauges conform to the requirements as specified in table 1. If a linear measurement device is used, verify that it meets the requirements of USBR 1000. If the calibration is not current, perform the calibration before using the linear measurement device for this procedure.

18. Conditioning — Method B

18.1 Prior to performing this procedure, place the plug gauges, linear measurement devices, and sieves in the same environment in which they are to be checked for several hours until their temperatures are approximately the same.

19. Procedure — Method B

19.1 All data are to be recorded on the "Checking Wire-Cloth Sieve (Plug Gauges)" form as shown on figure 10.

19.2 Record the sieve size in both SI and inch-pound units. Also, record the sieve control number, if applicable.

19.3 Visually examine the sieve—preferably with a magnifying glass, for any tears, excessive wear, and/or wire displacement. If—upon completion of the visual inspection—flaws are not apparent or if suitable repairs are made, check the accepted box; if not, check the rejected box. The sieve, if rejected, shall be discarded.

19.4 Locate a minimum of 10 sets—each containing 10 aperture dimensions and wire diameters—as shown on figure 7. Five sets will run in the warp X direction and five sets will run in the shoot Y direction. The sets should be selected to uniformly cover the entire surface of the sieve or wherever excessive wear is shown. If there are fewer than 100 apertures in the sieve, check all apertures. If 10 sets of 10 aperture dimensions and wire diameters cannot be located, then randomly select 100 apertures and wire diameter, 50 in the warp X direction and 50 in the shoot Y direction to evenly represent the sieve.

7-2398 (1-87)
Bureau of Reclamation

CHECKING WIRE-CLOTH SIEVE (PLUG GAUGES)

Designation USBR 1025 - 89

PROJECT: EXAMPLE | FEATURE | LAB. LOCATION

CALIBRATION PERFORMED BY | DATE | CALIBRATION CHECKED BY | DATE

Sieve Size _____ No. 3/8 inches 9.5 mm

Visual Inspection: ☒ Accepted ☐ Rejected

Sieve Control No. 8"- 2

Aperture No.	Field No.	< go		go to no-go		no-go to max		> max		Wire Diameter (mm)	
		X	Y	X	Y	X	Y	X	Y	X	Y
1	1			✓						2.27	
2				✓						2.17	
3				✓						2.22	
4				✓						2.23	
5				✓						2.29	
6				✓						2.31	
7				✓						2.27	
8				✓						2.28	
9				✓						2.26	
10				✓						2.31	
11	2				✓						2.23
12					✓						2.25
13					✓						2.27
14					✓						2.29
15					✓						2.30
16							✓				2.31
17					✓						2.32
18					✓						2.27
19					✓						2.26
20					✓						2.28
21											
22											
23											
24											
25											

	Average Aperture X	Average Aperture Y
Total No. Measured	50	50
No. out of spec.	0	4
Percent	0	8
Total Percent	4 (5 percent allowed)	

Average Wire Diameter
Limits 2.16 to 2.38
Avg. X 2.26 Y 2.28

Remarks: Average wire diameter and total percent include all pages.
(Only partial sieve checking data shown)

Accepted ☒
Rejected ☐

SHEET _____ OF _____

Figure 10. - Checking wire-cloth sieves (plug gauges) — example.

19.5 Obtain the correct plug gauge for the sieve to be tested, matching the sieve size with the plug gauge size.

19.6 Insert the plug gauge in the first aperture (A_1) of the first set with the long horizontal axis of the gauge blade oriented in the warp X direction (fig. 8). Visually determine the region of the plug gauge blade that is intersected by the surface of the sieve and place a checkmark in the appropriate column corresponding to the plug gauge reading as shown on figure 10. Figure 11 shows a plug gauge placed in a sieve.

19.7 Using the linear measurement device, measure the first wire diameter W_1 of the first set (fig. 8) to the nearest 0.01 mm and record as shown on figure 10.

19.8 Repeat subparagraphs 19.6 and 19.7 using the appropriate positions until a minimum of 10 aperture dimensions and wire diameters for the set running in the warp X direction have been checked (see subpar. 19.4).

19.9 Insert the plug gauge in the first aperture A_{11} of the second set with the long horizontal axis of the gauge blade oriented in the shoot Y direction (fig. 8). Visually determine the region of the plug gauge blade that is intersected by the surface of the sieve and place a mark in the appropriate column corresponding to the plug gauge reading as shown on figure 10.

19.10 Using the linear measurement device, measure the first wire diameter W_{11} of the second set (fig. 8) to the nearest 0.01 mm and record as shown on figure 10.

19.11 Repeat subparagraph 19.9 and 19.10 using the appropriate positions until a minimum of 10 aperture dimensions and wire diameters for the set running in the shoot Y direction have been checked (see subpar. 19.4).

19.12 Repeat subparagraphs 19.8 and 19.11 until a minimum of 10 sets, 5 sets running in the warp X direction and 5 sets running in the shoot Y direction, have been checked.

19.13 Obtain the appropriate minimum and maximum allowable limits for the average wire diameter from table 4 and record as shown on figure 10. If the sieve size is not shown on table 4, obtain the specified values from appendix X1, table X1.1.

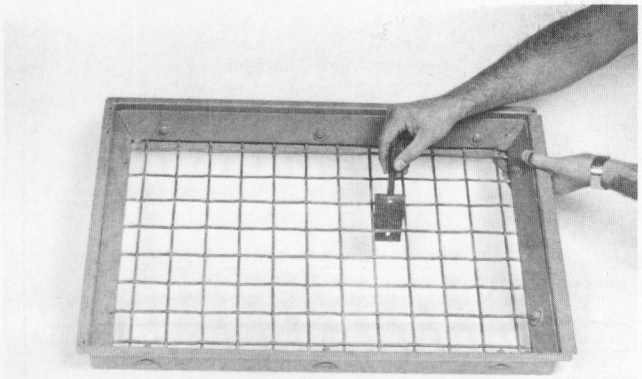

Figure 11. – Square frame wire cloth sieve.

19.14 Calculate the percentage of openings which fall in the "no-go to max." region for both the warp X and shoot Y directions and record to the nearest 1 percent as shown on figure 10. Calculate the total percentage and record as shown on figure 10.

19.15 Calculate and record to the nearest 0.01 mm the average wire diameter in both the warp X and shoot Y directions as shown on figure 10.

20. Calculations — Method B

20.1 Calculate the percent of oversize apertures in the "no-go to max." column in the warp X or shoot Y direction for the entire sieve.

$$P_i = 100 \left(\frac{t_i}{N_i} \right) \quad (4)$$

where:

P_i = percent of oversized apertures, %
t_i = total number of apertures in the "no-go to max." column
N_i = total number of apertures measured
100 = convert from decimal to percent

NOTE 5.–The subscript i denotes either the warp X or shoot Y direction.

20.2 Calculate the total percentage of apertures in the "no-go to max." region for the entire sieve.

$$P_t = \frac{P_x + P_y}{2} \quad (5)$$

where:

P_t = total percentage of apertures in the "no-go to max." region, %
P_x = percent apertures in the "no-go to max." region in the warp X direction, %
P_y = percent apertures in the "no-go to max." region in the shoot Y direction, %

20.3 Calculate the average wire diameter in either the warp X or shoot Y direction.

$$W_a = \frac{w_1 + w_2 + w_3 \ldots + w_n}{N_w} \quad (6)$$

where:

W_a = average wire diameter in either the X or Y, mm
w_1, w_2, w_3, and w_n = measured individual wire diameters in either the X or Y direction, mm
N_w = total number of wire diameter measurements in either the X or Y direction

21. Interpretation of Results — Method B

21.1 The sieve will be accepted under the following criteria:

- The visual inspection is acceptable
- The average wire diameter, of the warp X and shoot Y directions (taken separately), falls within the specified limits

- Either all the checkmarks are in the "go to no-go" columns or less than 5 percent of the checkmarks fall in the "no-go to max." column.
- There are no aperture dimensions in the "< go" or "> max." columns

21.2 If there are greater than 5-percent openings in the "no-go to max." column, recalibrate the sieve using method C.

21.3 If the sieve does not meet the criteria of subparagraph 21.1, except as noted in subparagraph 21.2, the sieve is to be rejected. It may be repaired and rechecked, otherwise discard if rejected.

22. Report — Method B

22.1 The report is to consist of a completed and checked "Checking Wire-Cloth Sieve (Plug Gauges)" form (fig. 10).

22.2 All calculations are to show a checkmark.

METHOD C
Checking Wire-Cloth Sieve Using
a Linear Measurement Device

23. Summary of Method — Method C

23.1 Method C is used to check sieves having aperture dimensions from 2.36 mm (No. 8) to 150 mm (6 in). Perform a visual inspection of the sieve. Use a linear measurement device to check a minimum of 10 sets of 10 aperture dimensions and wire diameters as shown in figure 7. Five sets are checked in the warp X direction and five sets are checked in the shoot Y direction (fig. 4). Average wire diameter and aperture dimensions are calculated for both the warp X and shoot Y directions and compared to maximum and minimum allowable dimensions. Aperture dimensions are checked for allowable oversize percentage and maximum aperture dimension. A decision to accept or reject the sieve for laboratory use is based on the sieve meeting specified dimensions.

24. Apparatus — Method C

24.1 *Linear Measurement Devices.*-A vernier or dial caliper (fig. 3) is used to measure aperture dimensions and wire diameters. The linear measurement device is to meet requirements of Federal Specifications GGG-C-111B, and conform to any additional requirements specified in USBR 1000.

25. Calibration and Standardization—Method C

25.1 Verify that the linear measurement device has been calibrated in accordance with USBR 1000. If the calibration is not current, perform the calibration before using the linear measurement device for this procedure.

26. Conditioning — Method C

26.1 Prior to performing this procedure, place the linear measurement device and sieves in the same environment in which they are to be checked for several hours until their temperatures are approximately the same.

27. Procedure — Method C

27.1 All data are to be recorded on the "Checking Wire-Cloth Sieve (Measurement Devices)" form as shown on figure 12.

27.2 Record the sieve size in both SI and inch-pound units. Also record the sieve control number, if applicable, as shown on figure 12.

27.3 Visually examine the sieve—preferably with a magnifying glass, for any tears, excessive wear, and/or wire displacement. If—upon completion of the visual inspection—flaws are not apparent or if suitable repairs are made, check the accepted box; if not, check the rejected box. The sieve, if rejected, shall be discarded.

27.4 Locate a minimum of 10 sets — each containing 10 aperture dimensions and wire diameters — as shown on figure 7. Five sets will run in the warp X direction and five will run in the shoot Y direction. The sets should be selected to uniformly cover the entire surface of the sieve or wherever excessive wear is shown. If there are fewer than 100 apertures in the sieve, check all apertures. If 10 sets of 10 aperture dimensions and wire diameters cannot be located, then randomly select 100 apertures and wire diameters, 50 in the warp X direction and 50 in the shoot Y direction to evenly represent the sieve.

27.5 Beginning with the first aperture (A_1, fig. 8) of the first set, measure the aperture dimension using a linear measurement device. Measure the aperture dimension in the warp X direction, and record the value to the nearest 0.01 mm as shown on figure 12.

27.6 Using the linear measurement device, measure the first wire diameter W_1 of the first set (fig. 8) to the nearest 0.01 mm and record as shown on figure 12.

27.7 Repeat subparagraphs 27.5 and 27.6 until a minimum of 10 aperture dimensions and wire diameters each have been checked for the set.

27.8 Beginning with the first aperture (A_{11}, fig. 8) of the second set, measure the aperture dimension using a linear measurement device. Measure the aperture dimension in the shoot Y direction, and record the value to the nearest 0.01 mm as shown on figure 12.

27.9 Using the linear measurement device, measure the first wire diameter W_{11} of the second set (fig. 8) to the nearest 0.01 mm and record on figure 12.

27.10 Repeat subparagraphs 27.8 and 27.9 until a minimum of 10 aperture dimensions and wire diameters each have been checked for the set.

27.11 Repeat subparagraphs 27.7 and 27.10 until a minimum of 10 sets, 5 sets running in the warp X direction and 5 sets running in the shoot Y direction, have been checked.

27.12 Obtain the following values from table 4 and record as shown on figure 12:

- Average wire diameter limits
- Average aperture dimension limits
- Largest allowable aperture dimension

7-2397 (12-86) Bureau of Reclamation	CHECKING WIRE-CLOTH SIEVE (MEASUREMENT DEVICES)	Designation USBR 1025 . 89
PROJECT: EXAMPLE	FEATURE:	LAB. LOCATION:
CALIBRATION PERFORMED BY:	DATE:	CALIBRATION CHECKED BY: DATE:

Sieve Size _____ No. 3 inches 75 mm

Visual Inspection: ☒ Accepted ☐ Rejected

Sieve Control No. 8"- 3

Aperture No.	Field No.	Aperture Dimension (mm)		Wire Diameter (mm)	
		Warp (X)	Shoot (y)	Warp (X)	Shoot (Y)
1	↓	74.2	74.0	5.75	5.78
2		75.0	76.0	5.83	5.80
3					
4					
5					
6					
7					
8					
9					
10					
11					
12					
13					
14					
15					
16					
17					
18					
19					
20					
21					
22					
23					
24					
25					

	Allowable min	Allowable max	Measured X	Measured Y
Average Wire Diameter (mm)	5.51	6.09	5.79	5.79
Average Aperture (mm)	73.8	77.2	74.6	75.0
Largest Aperture (mm)		78.7	75.0	76.0
5 % of Apertures can exceed		78.1 (mm)	0 %	

Remarks: Only two apertures on 8-inch diameter sieve.

Accepted ☒
Rejected ☐

SHEET _____ OF _____

Figure 12. – Checking wire-cloth sieve (measurement devices) — example.

- Aperture dimension of which 5 percent of the measured apertures can exceed

NOTE 6.–If table 4 does not list the tolerances needed for a certain sieve size, refer to appendix X1, table X1.1.

27.13 Calculate and record to the nearest 0.01 mm the average aperture dimension and average wire diameter in both the warp X and shoot Y directions as shown on figure 12.

27.14 Locate and record to the nearest 0.01 mm the largest sieve aperture dimension in both the warp X and shoot Y directions as shown on figure 12.

27.15 Calculate and record to the nearest one percent the percentage of apertures greater than the allowable limit as shown on figure 12.

28. Calculations — Method C

28.1 Calculate the average aperture dimension in both the warp X and shoot Y direction for the entire sieve.

$$A_a = \frac{a_1 + a_2 + a_3 \ldots + a_n}{N_a} \quad (7)$$

where:

A_a = average aperture dimension in either the X or Y direction, mm

a_1, a_2, a_3, and a_n = measured sieve aperture dimension in either the X or the Y direction, mm

N_a = total number of aperture measurements in either the X or the Y direction

28.2 Calculate the measured percentage of aperture dimensions greater than the limit for the entire sieve.

$$\% \text{ Greater} = 100 \left(\frac{A}{N} \right) \quad (8)$$

where:

A = number of aperture measurements greater than the limit

N = total number of aperture measurements for the sieve

100 = convert from decimal to percent

28.3 Calculate the average wire diameter in both the warp X and shoot Y direction for the entire sieve.

$$W_a = \frac{w_1 + w_2 + w_3 \ldots + w_n}{N_w} \quad (9)$$

where:

W_a = average wire diameter in either the X or Y direction, mm

w_1, w_2, w_3, and w_n = measured individual wire diameter in either the X or Y direction, mm

N_w = total number of wire diameter measurements in either the X for Y direction

29. Interpretation of Results — Method C

29.1 The sieve will be accepted if the following criteria are met:

- The visual inspection is acceptable
- The average wire diameter, of the warp X and shoot Y directions (taken separately), falls within the specified limits
- The average aperture dimension in both the warp X and shoot Y direction is within the specified limits
- The largest measured aperture dimension is less than the specified limit
- The percentage of measured aperture dimensions greater than the specified limit is 5 percent or less

29.2 If the criteria in subparagraph 29.1 are met, check the accepted box; if not, check the rejected box. If the sieve is rejected and cannot be repaired it should be discarded.

30. Report — Method C

30.1 The report is to consist of a completed and checked "Checking Wire-Cloth Sieve (Measurement Devices)" form (fig. 12).

30.2 All calculations are to show a checkmark.

METHOD D
Checking Perforated Plate Sieve
Using a Linear Measurement Device

31. Summary of Method — Method D

31.1 Method D is used to check perforated plate sieves having aperture dimensions from 4.75 mm (No. 4) to 150 mm (6 inch). Perform a visual inspection of the sieve. Use a linear measurement device to measure aperture dimension, bridgewidth, and plate thickness along two lines. Aperture pitch is calculated. The dimensions obtained are individually compared with specified dimensions. A decision to accept or reject the perforated plate sieve for laboratory use is based on the sieve meeting specified dimensions.

32. Apparatus — Method D

32.1 *Linear Measurement Devices.*–A vernier or dial caliper (fig. 3) is used to measure bridgewidth and aperture dimension. The plate thickness is measured using any reliable linear measuring device. The linear measurement devices are to meet requirements of Federal Specifications GGG-C-111B, and conform to any additional requirements specified in USBR 1000.

33. Calibration and Standardization — Method D

33.1 Verify that the linear measurement devices have been calibrated in accordance with USBR 1000. If the calibration is not current, perform the calibration before using the linear measurement device for this procedure.

34. Conditioning — Method D

34.1 Prior to performing this procedure, place the linear measurement devices and sieves in the same

environment in which they are to be checked for several hours until their temperatures are approximately the same.

35. Procedure — Method D

35.1 All data are to be recorded on the "Checking Perforated Plate Sieve" form as shown on figure 13.

35.2 Record the sieve size in both SI and inch-pound units. Also record the sieve control number, if applicable, as shown on figure 13. Locate from figure 14 and record, as shown on figure 13, sieve aperture dimension limits, bridgewidth dimension limit, pitch dimension limits, and plate thickness dimension limits for the appropriate sieve size. If the sieve size is not shown on figure 14, specified values can be obtained from appendix X1, table X1.2.

35.3 Visually examine the perforated plate sieve—preferably with a magnifying glass, for any flaws. If—upon completion of the visual inspection—flaws are not apparent or if suitable repairs are made, check the accepted box; if not, check the rejected box. The sieve, if rejected, shall be discarded. A typical perforated plate sieve is shown on figure 15.

NOTE 6.–The plug gauges which where used for the wire-cloth sieves are unacceptable for the perforated plate sieves due to the change in allowable dimensions.

35.4 Check all dimensions using a linear measurement device. Because of the manner in which the sieve is fabricated, each aperture is tapered so be sure to make measurements on the side of the plate on which the manufacturer indicated the aperture size.

35.5 The two straight lines used for checking square apertures are separated by either 90 degrees (perpendicular), or 63 degrees 26 minutes to each other as shown on figure 14. The two straight lines used for checking round apertures are separated by 60 degrees.

35.6 The apertures selected to verify that the sieve is within allowable dimensions are those which lie along two straight lines, each at least 100-mm (3.94-in) in length, or a total of 20 apertures (10 in the direction of each line) whichever is greater. If these requirements cannot be met, check all apertures in the sieve.

35.6.1 Beginning with straight line 1 (0 degrees), measure and record the aperture dimensions to the nearest 0.01 mm in both the warp X and shoot Y directions as shown on figure 13.

35.6.2 Measure and record the bridgewidth dimensions (Z_i, fig. 14) to the nearest 0.01 mm between the apertures measured in subparagraph 35.6.1.

35.6.3 Measure and record the plate thickness to the nearest 0.01 mm on 25 percent of the bridges measured as shown on figure 13. Preferably this should be done on the bridges that show the most wear—apparent by the smallest bridgewidth dimension. Repeat subparagraphs 35.6.1 and 35.6.4 until the required number of apertures or a distance of 100 mm have been checked.

35.6.4 Calculate and record to the nearest 0.01 mm the pitch distance as shown on figure 13.

35.7 Beginning at subparagraph 35.6.1 and continuing through subparagraph 35.6.4 check the sieve in the other direction of travel along line 2 as shown on figure 14. Record the data on a second form. If the aperture dimensions, pitch dimensions, bridgewidth, and plate thicknesses fall within the required limits, place a checkmark in the approved box. Record any remarks at the bottom of figure 13.

36. Calculations — Method D

36.1 Calculate the pitch dimension.

$$\text{Pitch} = \tfrac{1}{2} X_i + \tfrac{1}{2} X_{i+1} + Z_i \qquad (10)$$

where:

Pitch = center-to-center distance of adjacent apertures, mm

X_i = aperture dimension; X for line 1; Y for line 2, mm

X_{i+1} = aperture dimension of the following aperture: X for line 1; Y for line 2, mm

Z_i = bridgewidth of bridge between apertures X_i and X_{i+1} or Y_i and Y_{i+1}, mm

37. Interpretation of Results — Method D

37.1 The sieve will be accepted if the following criteria are met:

- The visual inspection is acceptable
- All aperture dimensions are within specified limits
- All bridgewidth dimensions are within specified limit
- All pitch distances are within specified limits
- Plate thickness falls within specified limits

37.2 If the criteria in subparagraph 37.1 are met, check the accepted box; if not, check the rejected box. If the sieve is rejected and cannot be repaired, it should be discarded.

38. Report — Method D

38.1 The report is to consist of a completed and checked "Checking Perforated Plate Sieve" form (fig. 13).

38.2 All calculations are to show a checkmark.

7-2399 (1-87)
Bureau of Reclamation

CHECKING PERFORATED PLATE SIEVE

Designation USBR 1025 - 89

PROJECT	FEATURE	LAB. LOCATION
EXAMPLE		

CALIBRATION PERFORMED BY	DATE	CALIBRATION CHECKED BY	DATE

Direction of Travel 0° Line No. 1

Visual Inspection: ☒ Accepted ☐ Rejected

Sieve Size 4 No. 3/16 inches 4.75 mm

Sieve Control No. _____

	Sieve Aperture Dimension (mm)		Bridgewidth Dimension (mm) Z	Pitch Dimension (mm) Pitch		Plate Thickness (mm)
	X	Y		X	Y	
1	4.72	4.67	2.66	7.38		
2	4.71	4.63	2.21	6.92		1.41
3	4.70	4.61	2.62	7.36		
4	4.78	4.62	2.64	7.38		
5	4.66	4.68	2.44	7.08		1.33
6	4.61	4.68	2.58	7.22		
7	4.68	4.69	2.50	7.18		1.54
8	4.68	4.65	2.48	7.12		1.46
9	4.61	4.70	2.57	7.20		
10	4.64	4.62	2.51	7.14		
11	4.62	4.61	2.70	7.35		
12	4.68	4.71	2.71	7.39		
13	4.68	4.72	2.57	7.23		
14	4.62	4.61	2.58	7.21		
15	4.64	4.61	2.63	7.28		
16	4.68	4.64				
17						
18						
19						
20						
21						
22						
23						
24						
25						

Sieve Aperture Dimension Limits (mm)	Bridgewidth Dimension Less than the Limit (mm)	Pitch Dimension Limits (mm)	Plate Thickness Limits (mm)
4.61 to 4.89	1.03	5.8 to 7.8	0.8 to 1.5

Remarks: _____

Accepted ☒
Rejected ☐

SHEET _____ OF _____

Figure 13. - Checking perforated plate sieve — example.

ALLOWABLE DIMENSIONS — PERFORATED PLATE SIEVES

Sieve size		Aperture width range	Distance between aperture center (pitch)	Plate thickness	Minimum bridge width
mm	in	mm	mm	mm	mm
75	3	74.3 - 75.4	86 - 109	2.5 - 4.0	10
37.5	1-½	37.1 - 37.9	43 - 55	1.5 - 2.5	5.25
19.0	¾	18.7 - 19.3	22 - 29	1.5 - 2.5	3
9.5	⅜	9.3 - 9.7	11.3 - 14.9	1.0 - 2.0	1.75
4.75	No. 4	4.61 - 4.89	5.8 - 7.8	0.8 - 1.5	1.03

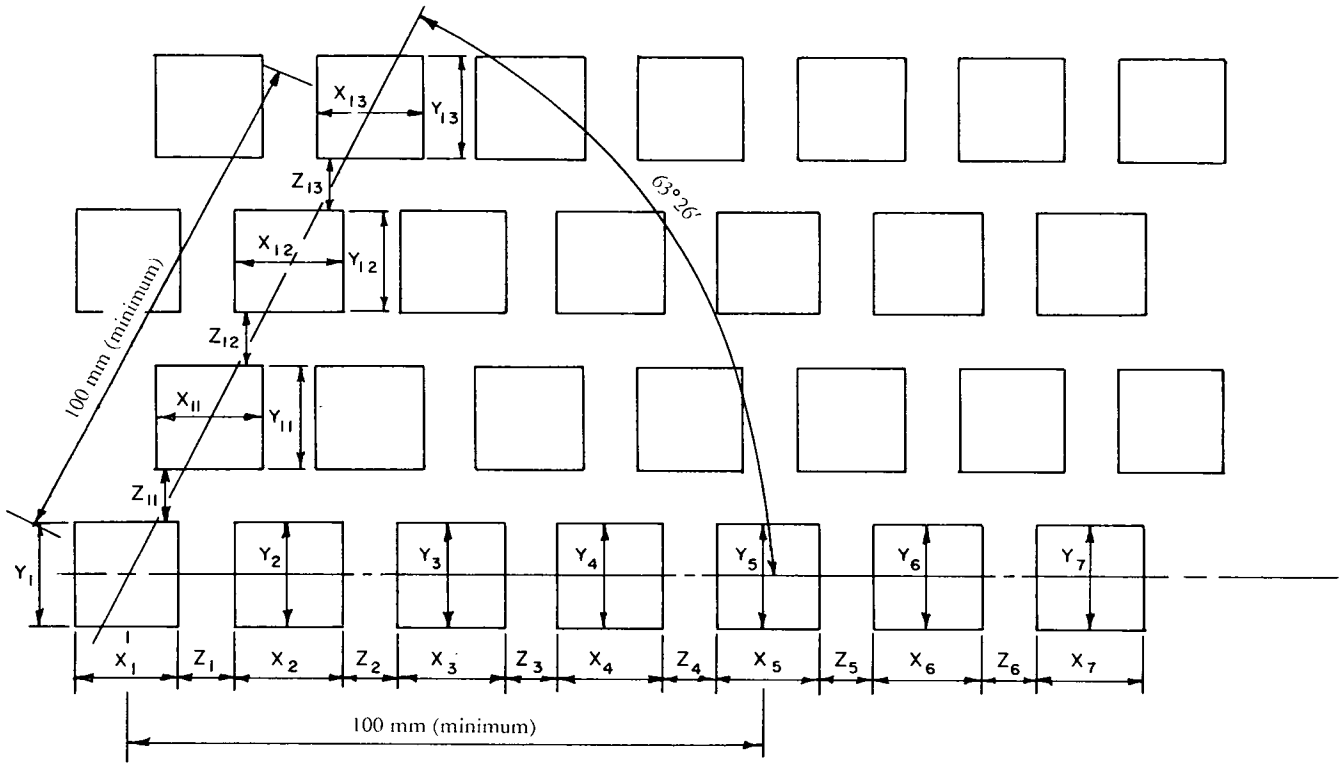

NOTE: This drawing denotes the two straight lines when seperated by 63 degrees 26 minutes.

Figure 14. - Allowable dimensions — perforated plate sieves. Measuring sequence for perforated plate sieves.

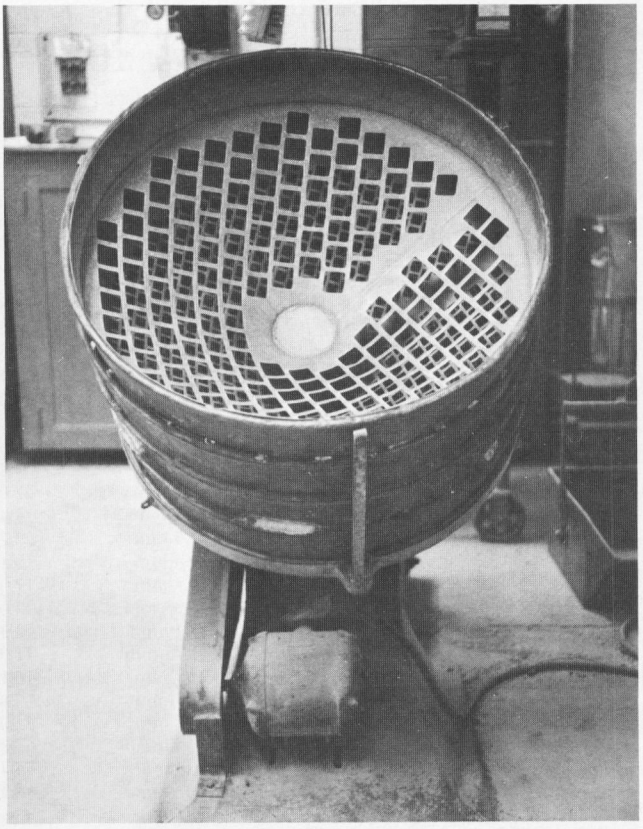

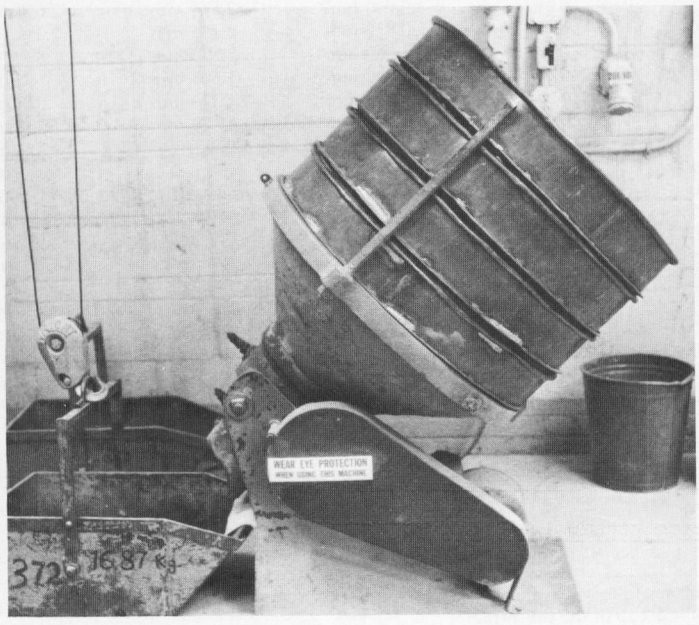

Figure 15. – Perforated plate sieves with orbital separating device.

Appendix X1

Table X1.1 – Nominal dimensions, permissible variations for wire cloth of standard test sieves (U.S.A. Standard Series) [ASTM E 11].

Sieve Designation		Nominal Sieve Opening, in.[c]	Permissible Variation of Average Opening from the Standard Sieve Designation	Maximum Opening Size for Not More than 5 % of Openings	Maximum Individual Opening	Nominal Wire Diameter, mm[a]
Standard[b]	Alternative					
(1)	(2)	(3)	(4)	(5)	(6)	(7)
125 mm	5 in.	5	±3.7 mm	130.0 mm	130.9 mm	8.0
106 mm	4.24 in.	4.24	±3.2 mm	110.2 mm	111.1 mm	6.40
100 mm[d]	4 in.[d]	4	±3.0 mm	104.0 mm	104.8 mm	6.30
90 mm	3½ in.	3.5	±2.7 mm	93.6 mm	94.4 mm	6.08
75 mm	3 in.	3	±2.2 mm	78.1 mm	78.7 mm	5.80
63 mm	2½ in.	2.5	±1.9 mm	65.6 mm	66.2 mm	5.50
53 mm	2.12 in.	2.12	±1.6 mm	55.2 mm	55.7 mm	5.15
50 mm[d]	2 in.[d]	2	±1.5 mm	52.1 mm	52.6 mm	5.05
45 mm	1¾ in.	1.75	±1.4 mm	46.9 mm	47.4 mm	4.85
37.5 mm	1½ in.	1.5	±1.1 mm	39.1 mm	39.5 mm	4.59
31.5 mm	1¼ in.	1.25	±1.0 mm	32.9 mm	33.2 mm	4.23
26.5 mm	1.06 in.	1.06	±0.8 mm	27.7 mm	28.0 mm	3.90
25.0 mm[d]	1 in.[d]	1	±0.8 mm	26.1 mm	26.4 mm	3.80
22.4 mm	⅞ in.	0.875	±0.7 mm	23.4 mm	23.7 mm	3.50
19.0 mm	¾ in.	0.750	±0.6 mm	19.9 mm	20.1 mm	3.30
16.0 mm	⅝ in.	0.625	±0.5 mm	16.7 mm	17.0 mm	3.00
13.2 mm	0.530 in.	0.530	±0.41 mm	13.83 mm	14.05 mm	2.75
12.5 mm[d]	½ in.[d]	0.500	±0.39 mm	13.10 mm	13.31 mm	2.67
11.2 mm	7/16 in.	0.438	±0.35 mm	11.75 mm	11.94 mm	2.45
9.5 mm	⅜ in.	0.375	±0.30 mm	9.97 mm	10.16 mm	2.27
8.0 mm	5/16 in.	0.312	±0.25 mm	8.41 mm	8.58 mm	2.07
6.7 mm	0.265 in.	0.265	±0.21 mm	7.05 mm	7.20 mm	1.87
6.3 mm[d]	¼ in.[a]	0.250	±0.20 mm	6.64 mm	6.78 mm	1.82
5.6 mm	No. 3½	0.223	±0.18 mm	5.90 mm	6.04 mm	1.68
4.75 mm	No. 4	0.187	±0.15 mm	5.02 mm	5.14 mm	1.54
4.00 mm	No. 5	0.157	±0.13 mm	4.23 mm	4.35 mm	1.37
3.35 mm	No. 6	0.132	±0.11 mm	3.55 mm	3.66 mm	1.23
2.80 mm	No. 7	0.111	±0.095 mm	2.975 mm	3.070 mm	1.10
2.36 mm	No. 8	0.0937	±0.080 mm	2.515 mm	2.600 mm	1.00
2.00 mm	No. 10	0.0787	±0.070 mm	2.135 mm	2.215 mm	0.900
1.70 mm	No. 12[e]	0.0661	±0.060 mm	1.820 mm	1.890 mm	0.810
1.40 mm	No. 14	0.0555	±0.050 mm	1.505 mm	1.565 mm	0.725
1.18 mm	No. 16	0.0469	±0.045 mm	1.270 mm	1.330 mm	0.650
1.00 mm	No. 18	0.0394	±0.040 mm	1.080 mm	1.135 mm	0.580
850 µm[f]	No. 20	0.0331	±35 µm	925 µm	970 µm	0.510
710 µm	No. 25	0.0278	±30 µm	775 µm	815 µm	0.450
600 µm	No. 30	0.0234	±25 µm	660 µm	695 µm	0.390
500 µm	No. 35	0.0197	±20 µm	550 µm	585 µm	0.340
425 µm	No. 40	0.0165	±19 µm	471 µm	502 µm	0.290
355 µm	No. 45	0.0139	±16 µm	396 µm	425 µm	0.247
300 µm	No. 50	0.0117	±14 µm	337 µm	363 µm	0.215
250 µm	No. 60	0.0098	±12 µm	283 µm	306 µm	0.180
212 µm	No. 70	0.0083	±10 µm	242 µm	263 µm	0.152
180 µm	No. 80	0.0070	±9 µm	207 µm	227 µm	0.131
150 µm	No. 100	0.0059	±8 µm	174 µm	192 µm	0.110
125 µm	No. 120	0.0049	±7 µm	147 µm	163 µm	0.091
106 µm	No. 140	0.0041	±6 µm	126 µm	141 µm	0.076
90 µm	No. 170	0.0035	±5 µm	108 µm	122 µm	0.064
75 µm	No. 200	0.0029	±5 µm	91 µm	103 µm	0.053
63 µm	No. 230	0.0025	±4 µm	77 µm	89 µm	0.044
53 µm	No. 270	0.0021	±4 µm	66 µm	76 µm	0.037
45 µm	No. 325	0.0017	±3 µm	57 µm	66 µm	0.030
38 µm	No. 400	0.0015	±3 µm	48 µm	57 µm	0.025

[a] The average diameter of the warp and of the shoot wires, taken separately, of the cloth of any sieve shall not deviate from the nominal values by more than the following:

Sieves coarser than 600 µm	5 %
Sieves 600 to 125 µm	7½ %
Sieves finer than 125 µm	10 %

[b] These standard designations correspond to the values for test sieve apertures recommended by the International Standards Organization, Geneva, Switzerland.

[c] Only approximately equivalent to the metric values in Column 1.

[d] These sieves are not in the standard series but they have been included because they are in common usage.

[e] These numbers (3½ to 400) are the approximate number of openings per linear inch but it is preferred that the sieve be identified by the standard designation in millimeters or µm.

[f] 1000 µm = 1 mm.

Table X1.2. – Nominal dimensions, permissible variations, and ranges for perforated plate in standard sieves [ASTM E 323].

Sieve Designation and Aperture Size[A]		Maximum Variation of Aperture Size[C]	Centers			Plate Thickness			
			Preferred		Permissible Range[D]	Preferred			Permissible Range
Standard[B]	Alternative		Standard	Alternative		Standard	Alternative		
mm	in.[E]	mm	mm	in.[E]	mm	mm	in.[E]	gage[F]	mm
(1)	(2)	(3)	(4)	(5)	(6)	(7)	(8)	(9)	(10)
125	5	±1.0	160	6¼	144 to 184	3.4	0.1345	10	2.5 to 4.0
106	4¼	±0.9	135	5¼	122 to 155	3.4	0.1345	10	2.5 to 4.0
100[G]	4	±0.9	128	5	115 to 147	3.4	0.1345	10	2.5 to 4.0
90	3½	±0.8	111	4⅜	100 to 128	2.7	0.1046	12	2.5 to 4.0
75	3	±0.7	95	3¾	86 to 109	2.7	0.1046	12	2.5 to 4.0
63	2½	±0.6	80	3⅛	72 to 92	2.7	0.1046	12	2.5 to 4.0
53	2⅛	±0.6	68	2⅝	61 to 78	2.7	0.1046	12	2.5 to 4.0
50[G]	2	±0.5	64	2½	58 to 73	2.7	0.1046	12	2.5 to 4.0
45	1¾	±0.5	57	2¼	51 to 65	1.9	0.0747	14	1.5 to 2.5
37.5	1½	±0.4	48	1⅞	43 to 55	1.9	0.0747	14	1.5 to 2.5
31.5	1¼	±0.4	41	1⅝	37 to 47	1.9	0.0747	14	1.5 to 2.5
26.5	1 1/16	±0.4	35	1 5/16	31 to 40	1.9	0.0747	14	1.5 to 2.5
25.0[G]	1	±0.4	32	1¼	29 to 37	1.9	0.0747	14	1.5 to 2.5
22.4	⅞	±0.3	29	1⅛	26 to 33	1.9	0.0747	14	1.5 to 2.5
19.0	¾	±0.3	25	1	22 to 29	1.9	0.0747	14	1.5 to 2.5
16.0	⅝	±0.27	21	13/16	19 to 24	1.9	0.0747	14	1.5 to 2.5
13.2	17/32	±0.25	18	¾	16 to 20	1.9	0.0747	14	1.0 to 2.0
12.5[G]	½	±0.24	17	11/16	15 to 20	1.9	0.0747	14	1.0 to 2.0
11.2	7/16	±0.23	15	⅝	13 to 17	1.9	0.0747	14	1.0 to 2.0
9.5	⅜	±0.20	13.0	½	11.3 to 14.9	1.9	0.0747	14	1.0 to 2.0
8.0	5/16	±0.19	11.0	7/16	9.5 to 12.6	1.9	0.0747	14	1.0 to 2.0
6.7	17/64	±0.17	9.9	25/64	8.3 to 11.4	1.5	0.0598	16	0.8 to 1.5
6.3[G]	¼	±0.16	9.5	⅜	8.0 to 10.9	1.5	0.0598	16	0.8 to 1.5
5.6	7/32	±0.15	8.7	11/32	7.2 to 10.0	1.5	0.0598	16	0.8 to 1.5
4.75	3/16	±0.14	6.8	¼	5.8 to 7.8	1.5	0.0598	16	0.8 to 1.5
4.00	5/32	±0.13	5.9	7/32	5.0 to 6.8	1.5	0.0598	16	0.8 to 1.5
3.35	0.127(⅛)	±0.12	4.9	3/16	4.2 to 5.7	1.5	0.0598	16	0.8 to 1.5
2.80	7/64	±0.11	4.4	11/64	3.7 to 5.1	1.5	0.0598	16	0.8 to 1.5
2.36	3/32	±0.10	3.8	5/32	3.2 to 4.4	1.5	0.0598	16	0.8 to 1.5
2.00	0.078	±0.09	3.3	⅛	2.8 to 3.8	1.5	0.0598	16	0.8 to 1.5
1.70	0.066	±0.08	2.9	7/64	2.5 to 3.3	0.8	0.0299	22	0.4 to 0.8
1.40	0.055	±0.08	2.6	0.100	2.2 to 3.0	0.8	0.0299	22	0.4 to 0.8
1.18	0.045	±0.07	2.2	0.090	1.9 to 2.5	0.8	0.0299	22	0.4 to 0.8
1.00	0.039	±0.07	2.0	0.077	1.7 to 2.3	0.8	0.0299	22	0.4 to 0.8

[A] The values shown in this table refer to both round and square apertures. In general, square-aperture perforated-sieve plates are available only in 3.35 mm and larger.

[B] These standard designations, progressing from a base of 1 mm in the ratio of approximately $\sqrt[4]{2}$ to 1, correspond to the values for test sieve apertures recommended by the International Organization for Standardization, Geneva, Switzerland.

[C] This permissible variation applies to both the standard aperture sizes and the alternative aperture sizes.

[D] A range of ±15 % is allowed except that in no case shall the minimum bridge (bar between apertures) be less than one half of the difference between the nominal aperture and the preferred center.

[E] Only approximately equivalent to the standard values.

[F] The gage values are for carbon steel. For other materials, the gage used should be the nearest decimal equivalent of the U.S. standard gage for steel.

[G] These sieves are not in the standard series but they have been included because they are in common usage.

UNITED STATES DEPARTMENT OF THE INTERIOR
BUREAU OF RECLAMATION

USBR 1030-89

PROCEDURE FOR

CALIBRATING SPECIFIC GRAVITY FLASKS

INTRODUCTION

This procedure is under the jurisdiction of the Geotechnical Services Branch, code D-3760, Research and Laboratory Services Division, Denver Office, Denver, Colorado. The calibration procedure is issued under the fixed designation USBR 1030. The number immediately following the designation indicates the year of acceptance or the year of last revision.

1. Scope

1.1 This designation outlines the procedure for calibrating specific gravity flasks used for determining the specific gravity of soils as performed in accordance with USBR 5320 (method A).

2. Applicable Documents

2.1 *USBR Procedures*:
USBR 1012 Calibrating Balances or Scales
USBR 3900 Standard Definitions of Terms and Symbols Relating to Soil Mechanics
USBR 5320 Determining Specific Gravity of Soils
2.2 *ASTM Standards*:
D 854 Standard Method for Specific Gravity of Soils
E1 ASTM Thermometers

3. Summary of Method

3.1 The mass of a dry, clean specific gravity flask is determined and recorded. The flask is filled with distilled water to the graduation line on the neck of the flask. A vacuum is applied to the flask until all entrapped air is removed. The mass of the flask and water, temperature of the water, and volume of the flask are determined and recorded.

4. Significance and Use

4.1 Specific gravity (volumetric) flasks are used to determine the apparent specific gravity of soils composed of material passing the U.S.A. Standard series No. 4 (4.75-mm) sieve. Accurate calibration of the mass and volume of the flask is necessary to obtain a reliable value of soil specific gravity.
4.2 The procedure described results in a flask calibration that may be used to determine the specific gravity of a specimen of any suitable mass.
4.3 The calibration procedure is to be performed upon receipt of the flask.

5. Terminology

5.1 Definitions are in accordance with USBR 3900. Terms of particular significance are:

5.1.1 *Apparent Specific Gravity.*–G_a, ratio of: (1) the mass in air of a given volume of the impermeable portion of a permeable material (that is, the solid matter including its impermeable pores or voids) at a stated temperature, to (2) the mass in air of an equal volume of distilled water at a stated temperature (ASTM definition).
5.1.2 *Specific Gravity of Solids.*–G_s, ratio of: (1) the mass in air of a given volume of solids at a stated temperature, to (2) the mass in air of an equal volume of distilled water at a stated temperature (ASTM).

6. Apparatus

6.1 *Balance or Scale.*–A typical balance or scale used for this designation must be readable to 0.01 g and have a capacity of about 500 g.
6.2 *Specific Gravity Flask* (fig. 1).–A flask having a capacity of 250 mL or larger.
6.3 *Vacuum Pump.*–A vacuum pump (motorized or hand-held) capable of applying a vacuum of at least 10 inches (250 mm) of mercury to the specific gravity flask.
6.4 *Flexible Tubing.*–Noncollapsible flexible tubing sufficient for connecting the vacuum pump to a rubber stopper which fits the specific gravity flask.
6.5 *Thermometer.*– 0.5 °C divisions conforming to the requirements of ASTM E 1.
6.6 Water bulb with stem.
6.7 *Water Bath.*–A water bath for maintaining the specific gravity flask and contents at a constant temperature during the calibration procedure. The water bath is not mandatory but is recommended to minimize effects of density variations of the water from room temperature fluctuations.
6.8 Cotton swabs.

7. Reagents and Materials

7.1 Distilled water is to be used for determining the volume of the specific gravity flask.

8. Precautions

8.1 *Safety Precautions*:
8.1.1 Ensure that the water bath and vacuum pump power cords are in good condition and are properly grounded.

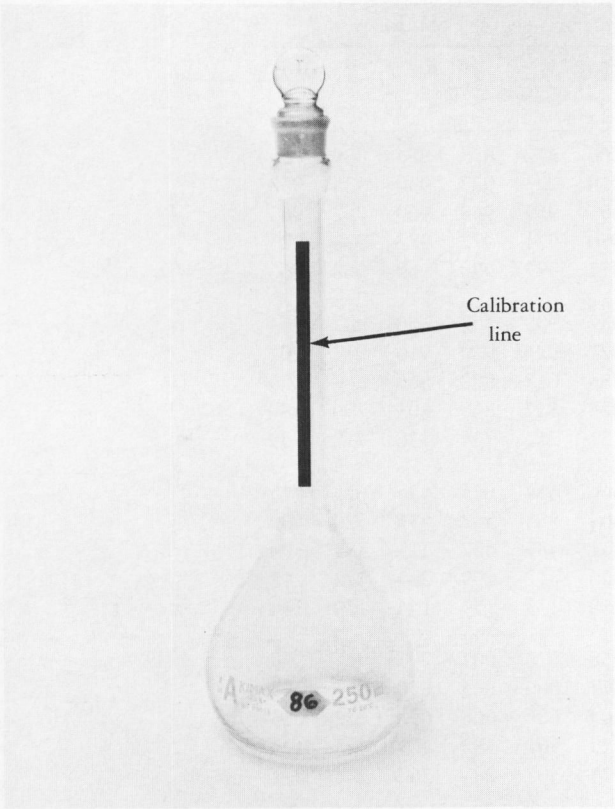

Figure 1. – Specific gravity flask.

8.1.2 Check the condition of the specific gravity flasks to ensure there are no chipped or sharp edges or cracks.

8.2 *Technical Precautions.*–Ensure that the graduation line on the flask is clearly inscribed on the flask neck.

9. Calibration and Standardization

9.1 Verify that the balance or scale used is currently calibrated in accordance with USBR 1012. If the calibration is not current, perform the calibration before using the balance or scale for this procedure.

10. Conditioning

10.1 Perform this calibration in an area isolated from excessive heat sources or air currents and is maintained at or near room temperature of 68 °F (20 °C).

10.2 The specific gravity flasks and water bath should be placed in the environment in which they are to be calibrated for a period of at least 24 hours before calibration.

11. Procedure

11.1 All data are to be recorded on the "Specific Gravity Flask Calibration (Volume Method)" form as shown on figure 2.

11.2 Record the identification number of the specific gravity flask to be calibrated.

11.3 Determine the mass of the clean, dry specific gravity flask to the nearest 0.01 gram and record.

11.4 Fill the flask with distilled water until the bottom of the meniscus is even with the reference mark (calibration line) on the neck of the flask as shown on figure 1.

11.5 Place the water-filled flask in the constant temperature water bath and securely place a rubber stopper on the top of the flask.

11.6 Apply a vacuum by connecting the vacuum source with appropriate tubing to the flask to remove all entrapped air.

11.7 Gently roll the flask occasionally to aid in removal of air.

11.8 Leave the flask in the water bath, with the vacuum applied, until there are no visible air bubbles.

11.9 Release the vacuum and remove the flask from the water bath. If the water level has fallen below the reference mark, the water bulb with stem is to be used to replace the distilled water precisely up to the mark.

11.10 With a towel, dry the outside of the flask and use a cotton swab to dry the inside neck of the flask above the reference mark.

11.11 Determine and record the mass of the water-filled flask to the nearest 0.01 gram.

11.12 Immediately after determining the mass of the water-filled flask, gently shake the flask and insert the thermometer to middepth.

11.13 Determine and record the temperature of the water to the nearest 0.5 °C.

11.14 Calculate and record the volume of the specific gravity flask to the nearest 0.01 cm^3.

11.15 Repeat subparagraphs 11.3 through 11.14 to obtain a second trial.

11.16 The difference between the two trials must be 0.1 cm^3 or less. If this is not the case, the procedure is to be repeated until two consecutive values are within 0.1 cm^3 of each other.

11.17 Calculate and record the average flask volume to the nearest 0.01 cm^3.

12. Calculations

12.1 Calculate the volume of the specific gravity flask using the expression:

$$(7) = \frac{(5)}{(6)}$$

where:

(7) = volume of flask, cm^3
(5) = (3) – (2) is the mass of water, g
(3) = mass of flask filled with water, g
(2) = mass of flask, g
(6) = absolute density of water at temperature (table 1), g/cm^3

13. Report

13.1 The report is to consist of a completed and checked "Specific Gravity Flask Calibration (Volume Method)" form (fig. 2).

13.2 All calculations are to show a checkmark.

13.3 A permanent record should be made for each specific gravity flask used in the laboratory.

Table 1. – Absolute density of water in grams per cubic centimeter.†

Degrees C	0	1	2	3	4	5	6	7	8	9
0	0.999841	847	854	860	866	872	878	884	889	895
1	900	905	909	914	918	923	927	930	934	938
2	941	944	947	950	953	955	958	960	962	964
3	965	967	968	969	970	971	972	972	973	973
4	973	973	973	972	972	972	970	969	968	966
5	965	963	961	959	957	955	952	950	947	944
6	941	938	935	931	927	924	920	916	911	907
7	902	898	893	888	883	877	872	866	861	855
8	849	843	837	830	824	817	810	803	796	789
9	781	774	766	758	751	742	734	726	717	709
10	700	691	682	673	664	654	645	635	625	615
11	605	595	585	574	564	553	542	531	520	509
12	498	486	475	463	451	439	427	415	402	390
13	377	364	352	339	326	312	299	285	272	258
14	244	230	216	202	188	173	159	144	129	114
15	099	084	069	*954	038	023	007	*991	*975	*959
16	0.998943	926	910	893	877	860	843	826	809	792
17	774	757	739	722	704	686	668	650	632	613
18	595	576	558	539	520	501	482	463	444	424
19	405	385	365	345	325	305	285	265	244	224
20	203	183	162	141	120	099	078	056	035	013
21	0.997992	970	948	926	904	882	860	837	815	792
22	770	747	724	701	678	655	632	608	585	561
23	538	514	490	466	442	418	394	369	345	320
24	296	271	246	221	196	171	146	120	095	069
25	044	018	*992	*967	*941	*914	*888	*862	*836	*809
26	0.996783	756	729	703	676	649	621	594	567	540
27	512	485	457	429	401	373	345	317	289	261
28	232	204	175	147	118	089	060	031	002	*973
29	0.995944	914	885	855	826	796	766	736	706	676
30	646	616	586	555	525	494	464	433	402	371

† For inch-pound applications, multiply the values in this table by 62.4280 to convert to lbm/ft³.

* First three significant figures shown in line below.

7-1453 (10-86) Bureau of Reclamation	SPECIFIC GRAVITY FLASK CALIBRATION (VOLUME METHOD)	Designation USBR 1030-89

PROJECT	FEATURE
Example	

CALIBRATION PERFORMED BY	DATE	COMPUTED BY	DATE	CHECKED BY	DATE

1. FLASK NO.	86	
2. MASS OF FLASK (g)	79.88	
	TRIAL NO.	
	1	2
3. MASS OF FLASK + DISTILLED WATER (g)	325.81	325.80
4. TEMPERATURE OF WATER (°C)	23.5	23.0
5. MASS OF WATER = (3) - (2) (g)	245.93	245.92
6. ABSOLUTE DENSITY OF WATER AT TEMP. (4) (g/cm^3)	0.997418	0.997538
7. VOLUME OF FLASK = (5)/(6) (cm^3)	246.57	246.53
8. AVERAGE (cm^3)	246.55	

1. FLASK NO.		
2. MASS OF FLASK (g)		
	TRIAL NO.	
	1	2
3. MASS OF FLASK + DISTILLED WATER (g)		
4. TEMPERATURE OF WATER (°C)		
5. MASS OF WATER = (3) - (2) (g)		
6. ABSOLUTE DENSITY OF WATER AT TEMP. (4) (g/cm^3)		
7. VOLUME OF FLASK = (5)/(6) (cm^3)		
8. AVERAGE (cm^3)		

GPO 854 - 192

Figure 2. - Specific gravity flask calibration (volume method) — example.

UNITED STATES DEPARTMENT OF THE INTERIOR
BUREAU OF RECLAMATION

USBR 1040-89

PROCEDURE FOR

CALIBRATING PRESSURE GAUGES

INTRODUCTION

This procedure is under the jurisdiction of the Geotechnical Services Branch, code D-3760, Research and Laboratory Services Division, Denver Office, Denver, Colorado. The procedure is issued under the fixed designation USBR 1040. The number immediately following the designation indicates the year of acceptance or the year of last revision.

1. Scope

1.1 This designation outlines the procedure for calibrating pressure gauges used for standard laboratory testing. It is recommended that any adjustments to a pressure gauge be made only by experienced personnel or the manufacturer.

1.2 This calibration procedure is limited to pressure gauges as classified in Federal Specification GG-G-76E.

2. Applicable Documents

2.1 American National Standard, ANSI B40.1-1980, Gauges-Pressure Indicating Dial Type — Elastic Element

2.2 Federal Specification GG-G-76E, Gauges, Pressure, and Vacuum, Dial Indicating, 1981

3. Summary of Method

3.1 A master gauge is calibrated using a primary pressure standard (see subpar. 9.2, figs. 1 and 3a). The pressure gauge to be calibrated is connected to the master gauge as shown on figure 3b. Pressure is applied to the pressure gauge at predetermined pressure increments over its full operating range. The value indicated by the pressure gauge is compared to the corresponding value indicated by the master gauge at each pressure increment. The percent error between the two values is calculated and the gauge is adjusted as necessary.

4. Significance and Use

4.1 Pressure gauges used in the laboratory must be calibrated to ensure reliable test results.

4.2 This calibration procedure is to be performed upon receipt of a pressure gauge and annually thereafter.

5. Apparatus

5.1 *Pressure Gauge.*–A pressure gauge meeting requirements of Federal Specification GG-G-76E and the American National Standard ANSI B40.1-1980.

5.2 *Primary Pressure Standard* (fig. 1).–A high accuracy, deadweight tester designed for precision measurement of applied gas pressure. The device consists of a weighted piston which becomes suspended in static equilibrium when a prescribed gas pressure is introduced. Calibrated masses are used for a range of pressures.

5.3 *Tubing.*–High-pressure tubing of appropriate size and length to connect pressure gauges and the primary pressure standard to the pressure source.

5.4 *Pressure Regulator.*–A pressure regulator capable of maintaining the desired pressure to the gauges and primary pressure standard.

5.5 *Valves.*–Appropriate size valves, two required; bleed and pressure cutoff.

6. Precautions

6.1 *Safety Precautions.*–Safety glasses are to be worn when applying pressure to the gauges.

7. Calibration and Standardization

7.1 Verify that the primary pressure standard has been currently calibrated in accordance with manufacturer specifications. If the calibration is not current, it is to be performed before using the primary pressure standard for this calibration procedure.

8. Conditioning

8.1 Not applicable; special conditioning requirements are not needed for this procedure.

9. Procedure

9.1 All data are to be recorded on the "Pressure Gauge Calibration" form as shown on figure 2.

9.2 *Master Gauge Calibration*:

9.2.1 Connect the master gauge to the primary pressure standard and pressure source as shown on figure 3a.

9.2.2 Apply pressure to the master gauge in increments (a minimum of five) over the full range of the master gauge.

9.2.3 Record the value of pressure indicated by the primary pressure standard and the corresponding value of pressure indicated by the master gauge for each pressure increment.

9.2.4 Compute the percent error for each pressure increment and compare the values obtained with permissible error values in table 1.

9.2.5 Adjust the master gauge if necessary (see subpar. 1.1) and repeat subparagraphs 9.2.2 through 9.2.4

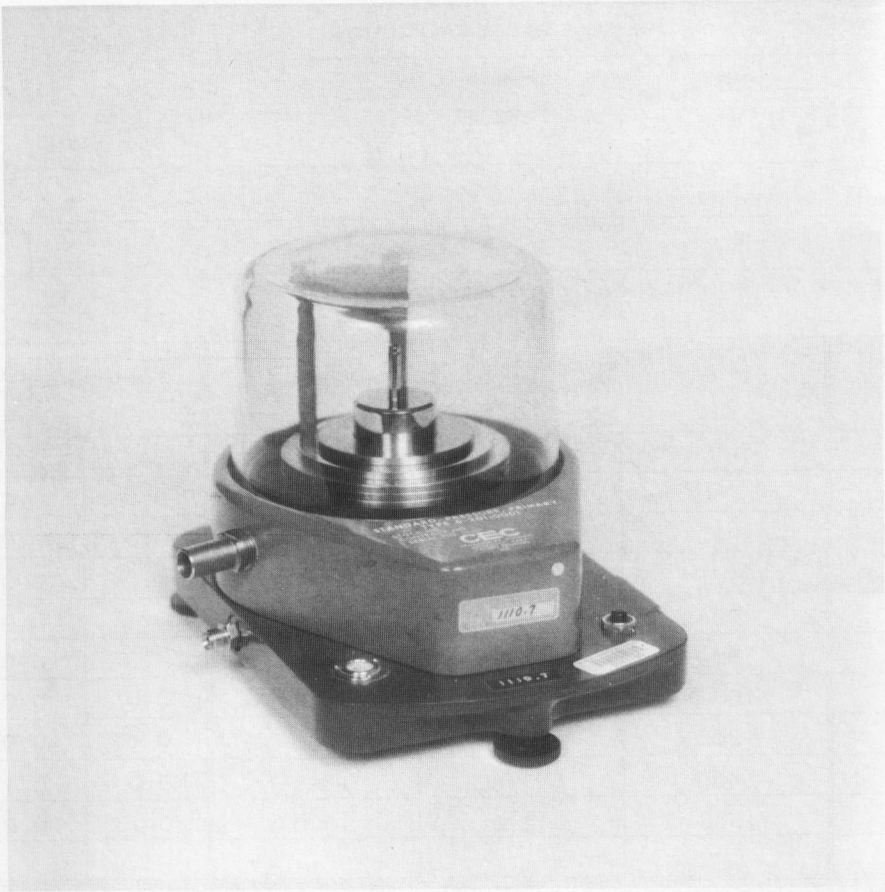

Figure 1. – Primary pressure standard.

until the calculated percent error is within the permissible range specified in table 1.

9.2.6 After three trials, if the percent error values calculated for the master gauge are not within those shown in table 1, a new master gauge should be obtained and calibrated in accordance with subparagraph 9.2.

9.3 *Gauge Calibration*:

9.3.1 Connect the gauge to be calibrated to the master gauge and pressure source as shown on figure 3b.

9.3.2 Apply pressure to the gauge to be calibrated in increments (a minimum of five) over the full range of the gauge.

9.3.3 Record the value of pressure indicated by the master gauge and the corresponding value of pressure indicated by the gauge being calibrated for each pressure increment.

9.3.4 Compute the percent error for each pressure increment and compare the values obtained with permissible error values in table 1.

9.3.5 Adjust the gauge if necessary (see subpar. 1.1) and repeat subparagraphs 9.3.2 through 9.3.4 until the calculated percent error values are within the permissible ranges specified in table 1.

9.3.6 After three trials, if the percent error values calculated for the gauge are not within those shown in table 1, the gauge should be rejected for laboratory use.

Table 1. – Pressure gauge accuracy grades.[1]

Accuracy grade[2]	Permissible error, percent of span		
	Lower one-fourth of scale	Middle one-half of scale	Upper one-fourth of scale
4A	0.1	0.1	0.1
3A	0.25	0.25	0.25
2A	0.5	0.5	0.5
A	2.0	1.0	2.0
B	3.0	2.0	3.0
C	4.0	3.0	4.0
D	5.0	5.0	5.0

[1] Table taken from ANSI B40.1-1980.

[2] Accuracy grade is specified by the manufacturer. An accuracy grade of 3A generally is suitable for most geotechnical laboratory testing applications.

10. Calculations

10.1 Calculations required are as shown on figure 2.

11. Report

11.1 The report is to consist of a completed and checked "Pressure Gauge Calibration" form (fig. 2).

11.2 All calculations are to show a checkmark.

7-2328 (10-85) Bureau of Reclamation	PRESSURE GAUGE CALIBRATION	Designation USBR 1040 89

MANUFACTURER: EXAMPLE

GAUGE RANGE	ACCURACY GRADE	SERIAL NO.
0-1400 kPa	3A	7
MASTER GAUGE RANGE	**ACCURACY GRADE**	**SERIAL NO.**
0-1500kPa	3A	45787

CALIBRATED BY	DATE	CHECKED BY	DATE

FULL SCALE MASTER GAUGE INDICATION (FCM) 1500 kPa
Master gauge calibration

Pressure applied lbf/in² ☐ kPa ☒	Master gauge reading (MGR) lbf/in² ☐ kPa ☒ Trial			% error = (1) − (MGR) / (FCM) Trial X 100		
(1)	(A)	(B)	(C)	(A)	(B)	(C)
0	0	0	0	0.0	0.0	0.0
200	200	200	200	0.0	0.0	0.0
400	401	400	402	-0.07	0.0	-0.13
600	598	600	599	0.13	0.0	0.07
800	801	801	801	-0.07	-0.07	-0.07
1000	1000	1000	1000	0.0	0.0	0.0
1200	1202	1201	1200	-0.13	-0.07	0.0
1400	1400	1398	1399	0.0	0.13	0.07
1500	1502	1500	1500	-0.13	0.0	0.0

FULL SCALE MASTER GAUGE INDICATION (FCG) 1400 kPa
Gauge calibration

Master gauge reading ☐ lbf/in² ☒ kPa	Gauge reading (GR) lbf/in² ☐ kPa ☒ Trial			% error = (1) − (GR) / (FCG) Trial X 100		
(1)	(A)	(B)	(C)	(A)	(B)	(C)
0	0			0.0		
200	202			-0.14		
400	402			-0.14		
600	602			-0.14		
800	802			-0.14		
1000	1000			0.0		
1200	1200			0.0		
1400	1400			0.0		

Accept ☒
Reject ☐

Remarks: Trial A indicates gauge meets permissible error percentages given in Table I for 3A accuracy grade.

GPO 849-232

Figure 2. – Pressure gauge calibration — example.

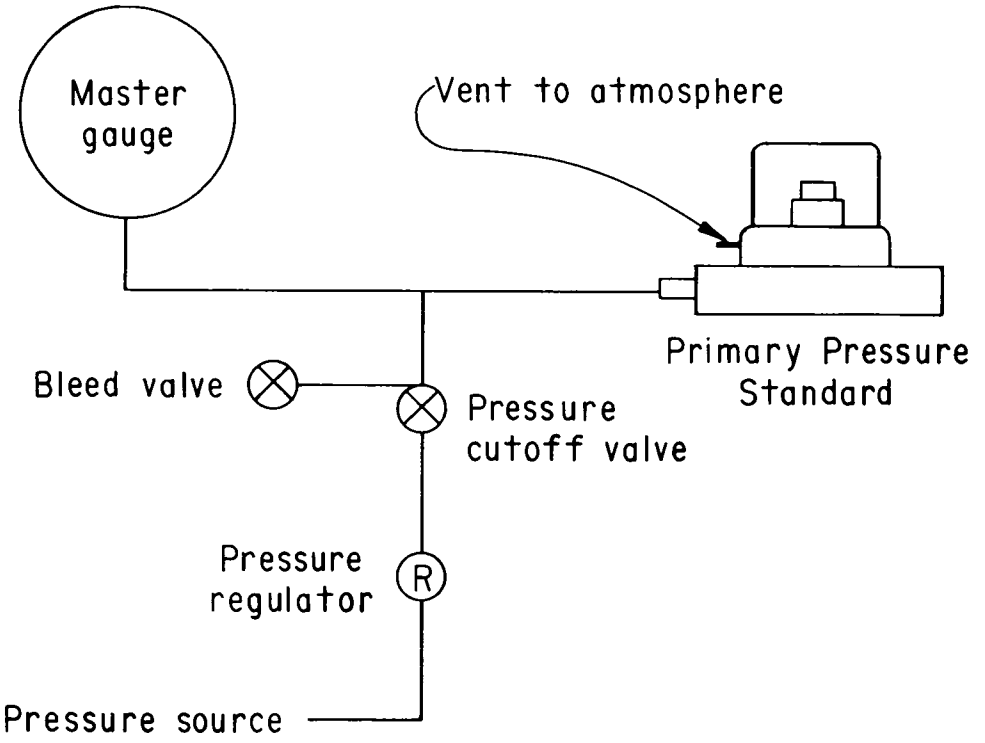

(a) Schematic of master gauge calibration

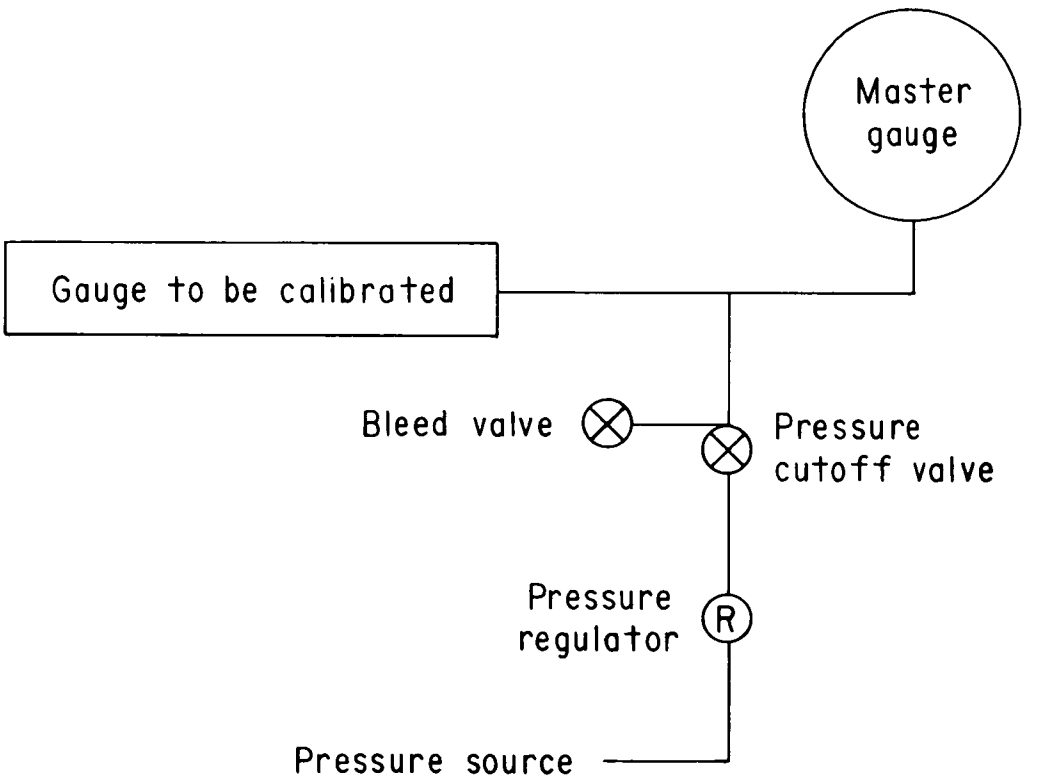

(b) Schematic of gauge calibration

Figure 3. – Schematics of calibration assemblies.

UNITED STATES DEPARTMENT OF THE INTERIOR
BUREAU OF RECLAMATION

USBR 1045-89

PROCEDURE FOR

CALIBRATING FORCE TRANSDUCERS (LOAD CELLS)

INTRODUCTION

This procedure is under the jurisdiction of the Geotechnical Services Branch, code D-3760, Research and Laboratory Services Division, Denver Office, Denver, Colorado. The procedure is issued under the fixed designation USBR 1045. The number immediately following the designation indicates the year of acceptance or the year of last revision.

1. Scope

1.1 This designation outlines the procedure for calibrating force transducers (load cells) for laboratory use. Two calibration methods are described. Method A outlines a calibration procedure using a platform scale load frame and a set of calibration masses for applying compressive forces or hanging a set of calibration masses to apply tensile forces. Method B describes a calibration procedure using a universal testing machine. Force transducers (load cells) can be calibrated in tension or compression using either method.

2. Auxiliary Tests

2.1 The universal testing machine used in this procedure must be calibrated in accordance with ASTM E 4. The platform scale load frame used in this procedure must be calibrated in accordance with USBR 1012 prior to performing this calibration procedure.

3. Applicable Documents

3.1 *USBR Procedure*:
USBR 1012 Calibrating Balances or Scales
3.2 *ASTM Standard*:
E 4 Load Verification of Testing Machines

4. Summary of Method

4.1 A force transducer (load cell) is loaded in either tension or compression using either a platform scale load frame and mass standards (method A, compression) and hanging standard masses (method A, tension), or a universal testing machine (method B). Forces are applied to the force transducer in increments over its rated capacity. The electrical output of the force transducer is compared to the known force applied at each force increment; and the linearity, hysteresis, repeatability, and creep of the force transducer are determined.

5. Significance and Use

5.1 A calibrated force transducer (load cell) must be used in the laboratory to ensure reliable test results.

5.2 This calibration procedure is to be performed upon receipt of the force transducer and annually thereafter.

6. Terminology

6.1 Definitions are in accordance with USBR 3900.

6.2 Terms not included in USBR 3900 specific to this designation are:

6.2.1 *Creep.*–Time-dependent strain or deformation; for example, continuing strain with sustained stress (ASTM definition).

6.2.2 *Hermetically sealed.*–Sealed and guaranteed to be airtight.

6.2.3 *Universal.*–In the text of this procedure, the term universal implies that the device can apply either compression or tension loads.

6.2.4 *Linearity.*–The variation of force transducer output values from a straight line. The measurements are obtained using a series of standard loads applied over the total rated capacity of the force transducer.

6.2.5 *Repeatability.*–The maximum difference between force transducer output readings for repeated loadings under identical loading and environmental conditions.

6.2.6 *Hysteresis.*–The maximum difference between force transducer output for the same applied load; one reading obtained by increasing the load from zero to the force transducer rated capacity, and the other by decreasing the load from the force transducer rated capacity to zero.

6.2.7 *Rated Capacity* (maximum capacity).–The maximum axial load the force transducer is designed to measure within its specifications.

7. Apparatus

7.1 *Force Transducer* (load cell).–A transducer (fig. 1) which converts changes in force into an electrical output.

7.1.1 Components of the force transducer should possess the following characteristics:

7.1.1.1 The force transducer should be hermetically sealed to prevent damage to the internal electrical components in the event of exposure to moisture.

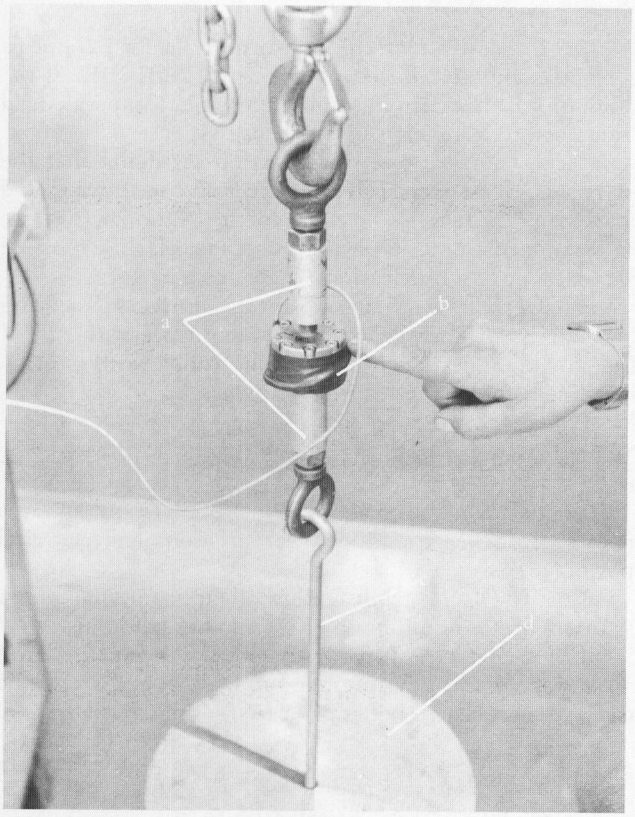

Figure 1. – Force transducer (load cell) and hanger. a) load cell couplers, b) load cell, c) hook, and d) hanger assembly with mass.

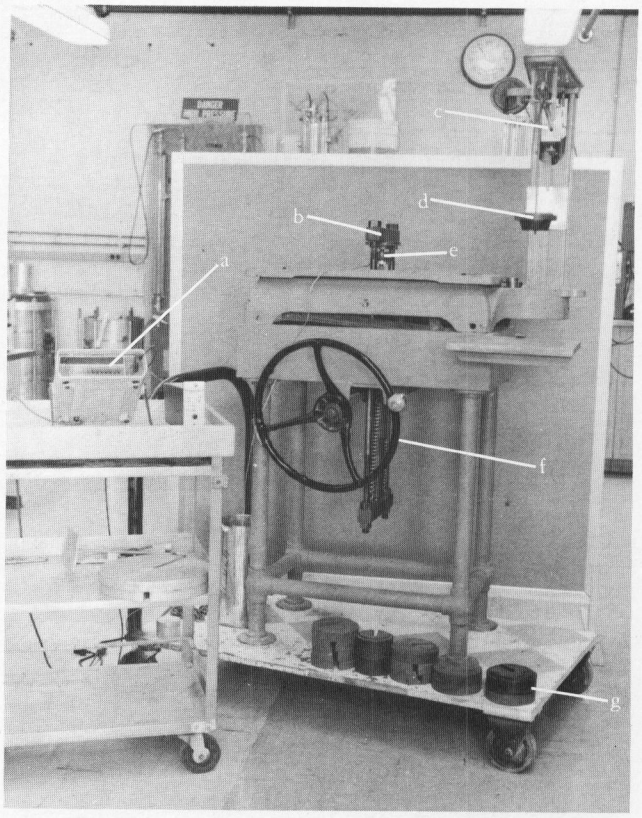

Figure 2. – Platform scale load frame. a) digital voltmeter, b) loading yoke, c) scale beam, d) scale beam hanger, e) load cell, f) wheel, and g) calibration masses.

7.1.1.2 The force transducer should be threaded with appropriate size threaded fittings to attach the load cell to the test frame.

7.1.1.3 The cable and cable gland connections should be securely fastened to the body of the load cell.

7.2 *Signal Conditioner.*–A device necessary to make the electrical output from the transducer compatible with the readout system.

7.3 *Readout System.*–A device (voltmeter or computer) that accepts the output signal from the signal conditioner and converts it into a visual display.

7.4 *Method A Equipment Requirements.*–Platform scale load frame (fig.2):

7.4.1 *Loading Apparatus.*–A mechanical loading device used to apply a known compression load to the force transducer by way of a system of knife edges and beams. A unit having the capacity to apply 2,000 pounds-force (8.896 kN) in compression is sufficient for most calibration tasks in a geotechnical laboratory.

7.4.2 *Calibration Masses.*–A set of precision calibration masses used to apply loads to the force transducer in increments of approximately 20, 40, 60, 80, and 100 percent of the rated capacity of the force transducer.

7.4.3 *Hanger.*–A hanger assembly, yoke, or hook from which to hang calibration masses from the force transducer as shown on figures 1 and 3.

7.5 *Method B Equipment Requirements.*–A Universal testing machine (fig. 4) capable of applying tension or compression loads in excess of 25,000 pounds-force (111 kN). Universal testing machines are used when force transducer calibrations require loads in tension or compression beyond the practical range of calibration masses or other mechanical loading devices. Verify that the universal testing machine was calibrated within the past year in accordance with ASTM E 4.

8. Precautions

8.1 *Safety Precautions*:

8.1.1 This designation may involve hazardous materials, operations, and equipment.

8.1.2 Examine the load cell body for burrs and sharp edges.

8.1.3 Verify that all electrical wiring is properly connected.

8.1.4 Safety shoes are to be worn when handling calibration masses.

8.2 *Technical Precautions*:

8.2.1 Use the same cables for calibrating the force transducer and for performing a test. A different cable length will change resistance of the circuit and will result in a change in calibration.

8.2.2 It is recommended that the serial number be noted for control purposes. Use a marking pencil rather

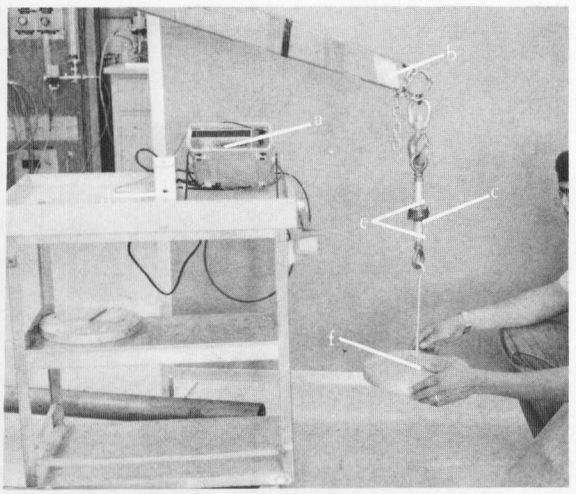

Figure 3. – Force transducer hanger assembly for tension calibration using mass standards. a) digital voltmeter, b) hoist, c) load cell, d) signal conditioner, e) load cell couplers, and f) hanger assembly.

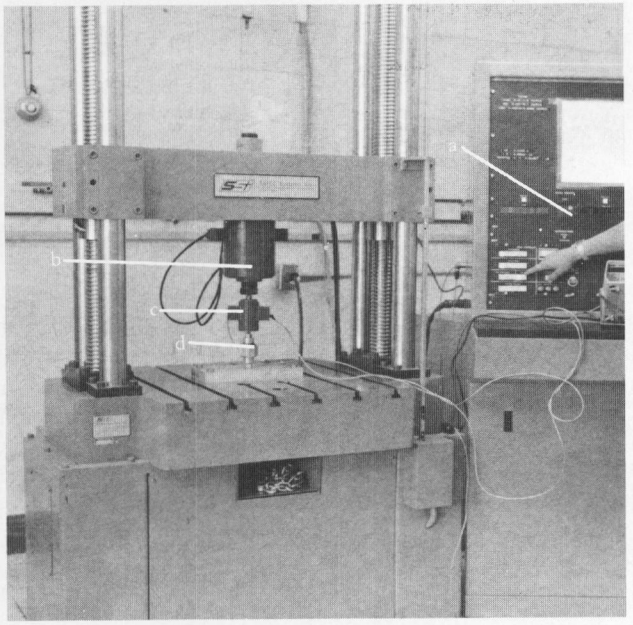

Figure 4. – Universal testing machine. a) control panel, b) universal testing machine force transducer, c) force transducer being calibrated, and d) coupler.

than a scribe to mark on the transducer body. If the force transducer must be marked, use extreme care.

8.2.3 The force transducer must be stored in a suitable box or case when not in use.

9. Calibration and Standardization

9.1 Verify that the readout system used is currently calibrated. If calibration is not current, it is to be calibrated in accordance with manufacturer's guidelines.

9.2 *Method A*:

9.2.1 Verify that the platform scale load frame is currently calibrated in accordance with USBR 1012. If the calibration is not current, calibrate the platform scale load frame before using for this procedure.

9.2.2 A certificate of inspection certifying that the mass calibration standards meet Federal specification and that their accuracy is traceable to the National Institute of Standards and Technology (National Bureau of Standards) or an International standard is required.

9.3 *Method B.*–Verify that the universal testing machine is currently calibrated in accordance with ASTM E 4. If the calibration is not current, calibrate the testing machine before using for this procedure.

10. Conditioning

10.1 Perform this calibration procedure in an area isolated from large temperature variations and electrical power surges.

10.2 To ensure stability, allow all electronic equipment to warm up for a minimum of 30 minutes before use.

10.3 Place the force transducer and calibration standards in the environment in which they are to be calibrated at least 24 hours prior to the time of calibration.

11. Procedure

11.1 All data are to be recorded on the "Force Transducer (Load Cell) Calibration" form as shown on figure 5.

11.2 Connect all electronic components to an appropriate power supply and allow the equipment to warm up a minimum of 30 minutes before use.

11.3 *Method A — Calibration Using a Platform Scale Load Frame and Mass Standards* (compression, fig. 2):

11.3.1 Connect the force transducer to the signal conditioner using appropriate connecting hardware.

11.3.2 Adjust the signal conditioner so the output of the force transducer is 0.000 volt d-c with zero mass on the force transducer.

11.3.3 Place the force transducer on the platform scale, and tare its mass so that the scale beam of the platform scale is balanced.

11.3.4 Position the force transducer directly beneath the loading yoke and plate of the platform scale load frame. Ensure that the force transducer loading pins are in the vertical position. (For some force transducers, it may be necessary to turn a nut onto each loading pin to hold the load cell vertical, level, and in compliance with the requirements for axial alignment as specified by the manufacturer.)

11.3.5 With the scale beam pin in place beneath the scale beam of the platform scale load frame, place sufficient mass on the scale beam to equal 100 percent of the rated capacity of the force transducer. Record the mass as the RC (*Rated capacity*) as shown on figure 5.

11.3.6 Slowly turn the wheel of the platform scale load frame until the scale beam lifts off of the pin on which the beam rests.

7-2358 (8-86), Bureau of Reclamation

FORCE TRANSDUCER (LOAD CELL) CALIBRATION

Designation USBR 1045-89

MANUFACTURER Example MODEL NO. 176 SERIAL NO. 2001

CALIBRATION METHOD: ☐ A - PLATFORM SCALE ☒ B - UNIVERSAL MACHINE

RC (RATED CAPACITY) (a) 200 lbf ____ N FORCE TRANSDUCER FACTOR (c)=(a)/(b) 20.000 ☒ lbf/V ☐ N/V

VOLTAGE OUTPUT (b) ±10.000 V

CALIBRATION PERFORMED BY ____ DATE ____ CALIBRATION CHECKED BY ____ DATE ____

CALIBRATION MASS REQUIREMENTS

	MASS REQUIRED		ACTUAL MASS USED	
FORCE INCREMENTS	lbm*	N	lbm*	N
.2 x (RC) = 40.0	40.0		40.0	
.4 x (RC) = 80.0	80.0		80.0	
.6 x (RC) = 120.0	120.0		120.0	
.8 x (RC) = 160.0	160.0		160.0	
1.0 x (RC) = 200.0	200.0		200.0	

*IMPLIES lbm = lbf

FORCE TRANSDUCER CALIBRATION: ☒ COMPRESSION ☐ TENSION

INCREASING FORCE INCREMENTS			DECREASING FORCE INCREMENTS		
FORCE INCREMENT ☒ lbm* ☐ N (1)	FORCE TRANSDUCER VOLTAGE OUTPUT (V) (2)	FORCE TRANSDUCER OUTPUT (2)x(c) ☒ lbf ☐ N (3)	FORCE INCREMENT ☒ lbm* ☐ N (4)	FORCE TRANSDUCER VOLTAGE OUTPUT (V) (5)	FORCE TRANSDUCER OUTPUT (5)x(c) ☒ lbf ☐ N (6)
Trial No. 1					
0	0.001	0.02	0	0.005	0.10
40.0	1.986	39.72	40.0	2.000	40.00
80.0	3.978	79.56	80.0	3.994	79.88
120.0	6.000	120.00	120.0	5.994	119.88
160.0	7.987	159.74	160.0	7.993	159.86
200.0	10.000	200.00	200.0	10.000	200.00
Trial No. 2					
0	0.001	0.02	0.0	0.004	0.08
40.0	1.989	39.78	40.0	2.000	40.00
80.0	3.986	79.72	80.0	4.002	80.04
120.0	5.993	119.86	120.0	6.002	120.04
160.0	8.001	160.02	160.0	8.006	160.12
200.0	10.009	200.18	200.0	10.009	200.18

PERCENT ERROR CALCULATIONS

LINEARITY % ERROR $\frac{(1)-(3)}{(RC)} \times 100$	HYSTERESIS % ERROR $\frac{(3)-(6)}{(RC)} \times 100$	REPEATABILITY %.ERROR $\frac{(3)1st - (3)2nd}{(RC)} \times 100$
Trial No.1		
0.01	0.04	0.00
0.14	0.14	0.03
0.22	0.16	0.08
0.00	0.06	0.07
0.13	0.06	0.14
0.00	0.00	0.09
Trial No.2		
0.01	0.03	
0.11	0.11	
0.14	0.16	
0.07	0.09	
0.01	0.05	
0.09	0.00	

CREEP % ERROR

FORCE APPLIED ☒ lbf ☐ N

TRANSDUCER OUTPUT AT ZERO MINUTES (a) 200.0 ☒ lbf ☐ N

TRANSDUCER OUTPUT AT 35 MINUTE (b) 200.3 ☒ lbf ☐ N

% ERROR = $\frac{|(a)-(b)|}{(RC)} \times 100 =$ 0.15

ACCEPT ☒

REJECT ☐

REMARKS: ____

Figure 5. - Force transducer (load cell) calibration — example.

11.3.7 Carefully remove the scale beam pin; and, if necessary, turn the wheel of the platform scale load frame to level the scale beam.

11.3.8 The output of the signal conditioner should read ±10.000 volts d-c. If the output is not ±10.000 volts d-c, adjust the gain control on the signal conditioner to obtain ±10.000 volts d-c. Polarity of the output signal depends on the wiring of the force transducer and the desire of the user. Record the *Voltage output* (fig. 5).

11.3.9 Place the scale beam pin under the scale beam and lower the beam onto the scale beam pin by turning the wheel of the platform scale load frame until the force transducer is completely unloaded. Calculate and record the "Force transducer factor" (fig. 5).

11.3.10 If necessary, readjust the signal conditioner so the output is equal to 0.000 volt d-c. If it is necessary to again zero the signal conditioner, repeat subparagraphs 11.3.5 through 11.3.9.

CAUTION.–Once the appropriate gain has been set do not readjust. If it is readjusted, the calibration values are incorrect and the readings are unreliable.

11.3.11 Remove all the mass from the scale beam and calculate calibration mass requirements as shown on figure 5.

11.3.12 Place sufficient mass on the scale beam so a force equal to 20 percent of the rated capacity of the force transducer is applied.

11.3.13 Lift the scale beam off of the pin by turning the wheel and carefully remove the scale beam pin. If necessary, turn the wheel of the platform scale load frame to level the scale beam. Read and record the *Force increment* applied and the *Force transducer voltage output* as shown in the Increasing Force Increments section of figure 5.

11.3.14 Repeat subparagraphs 11.3.12 through 11.3.13 for force increments of 40, 60, 80, and 100 percent of the rated capacity of the force transducer.

11.3.15 Unload the force transducer by removing mass from the scale beam to correspond to 80, 60, 40, 20, and 0 percent of the rated capacity of the force transducer. Level the scale beam after each decrement of mass is removed. Read and record the *Force increment* applied and *Force transducer voltage output* for each force as shown in the Decreasing Force Increments section of figure 5.

11.3.16 Repeat subparagraphs 11.3.12 through 11.3.15 to obtain two sets of readings.

11.3.17 Using the "Force transducer factor," calculate and record the *Force transducer output* (fig. 5).

11.4 *Method A — Calibration Using Mass Standards* (tension, fig. 3):

11.4.1 Hang the force transducer using appropriate adaptors.

11.4.2 Adjust the signal conditioner so the output of the force transducer is 0.000 volt d-c.

11.4.3 Attach the hanger to the bottom of the force transducer using appropriate adapters. Place sufficient mass on the hanger so the force transducer is loaded in tension to 100 percent of its rated capacity. Record the force applied as the RC (*Rated capacity*) (fig. 5).

11.4.4 The output of the signal conditioner should read ±10.000 volts d-c. If the output is not ±10.000 volts d-c, adjust the gain control on the signal conditioner to obtain ±10.000 volts d-c. Polarity of the output signal depends on the wiring of the force transducer and the desire of the user. Record the *Voltage output*, and calculate and record the "Force transducer factor" (fig. 5).

11.4.5 Remove the hanger and all the mass from the force transducer so the force transducer is completely unloaded and calculate *Calibration mass requirements* as shown on figure 5.

11.4.6 If necessary, readjust the signal conditioner so the output is equal to 0.000 volt d-c. If it is necessary to again zero the signal conditioner, repeat subparagraphs 11.4.3 through 11.4.5.

CAUTION.–Once the appropriate gain has been set, do not readjust. If it is readjusted, the calibration values are incorrect and the readings are unreliable.

11.4.7 Reattach the hanger to the force transducer and place sufficient mass on the hanger to produce tensile forces equal to 20, 40, 60, 80, and 100 percent of the rated capacity of the force transducer.

11.4.8 Record the *Force increment* applied and the *Force transducer voltage output* for each load increment.

11.4.9 Unload the force transducer by removing mass from the hanger attached to the force transducer to correspond to 80, 60, 40, 20, and 0 percent of the rated capacity of the force transducer. Read and record the *Force increment* applied and the *Force transducer voltage output* for each force increment as shown in the Decreasing Force Increments section of figure 5.

11.4.10 Repeat subparagraphs 11.4.7 through 11.4.9 to obtain two sets of readings.

11.4.11 Using the "Force transducer factor," calculate and record the *Force transducer output* (fig. 5).

11.5 *Method B — Calibration Using a Universal Testing Machine* (compression, fig. 6a):

11.5.1 Adjust the signal conditioner so the output of the force transducer is 0.000 volt d-c with zero force on the force transducer.

11.5.2 Adjust all ranges on the universal testing machine to zero.

11.5.3 Position the force transducer directly beneath the loading plate of the testing machine; ensure that the force transducer loading pins are in the vertical position. (For some force transducers, it may be necessary to turn a nut onto each loading pin to hold the load cell vertical, level, and in compliance with the requirements for axial alinement as specified by the manufacturer.)

11.5.4 Carefully adjust the controls on the universal testing machine until the top load plate just makes contact with the force transducer.

11.5.5 Compute the force required for 20, 40, 60, 80, and 100 percent of the rated capacity of the force transducer; select the appropriate load range on the testing machine to ensure that readings are obtained in its most sensitive range. Record the RC (*Rated capacity*) of the force transducer as shown on figure 5.

11.5.6 Slowly load the force transducer until a force equal to 100 percent of the rated capacity of the force transducer has been applied to the transducer.

11.5.7 Adjust the output of the signal conditioner so it registers ±10.000 volt d-c. The polarity of the signal depends on the wiring of the transducer and the desire of the user. Record the *Voltage output* (fig. 5).

11.5.8 Remove the force from the force transducer by adjusting the controls on the testing machine so the total force on the force transducer is equal to 0.00 lbf (0.00 N). Calculate and record the "Force Transducer Factor" (fig. 5).

11.5.9 If necessary, readjust the signal conditioner so the output is equal to 0.000 volt d-c. If it is necessary to again zero the signal conditioner, repeat subparagraphs 11.5.4 through 11.5.8.

CAUTION.–Once the appropriate gain has been set do not readjust. If it is readjusted, the calibration values are incorrect and the readings are unreliable.

11.5.10 Carefully adjust the controls on the testing machine to produce forces equal to 20, 40, 60, 80, and 100 percent of the rated capacity of the force transducer.

11.5.11 Read and record the *Force increment* applied and the *Force transducer voltage output* for each force increment.

11.5.12 Remove the force from the force transducer to correspond to 80, 60, 40, 20, and 0 percent of the rated capacity of the force transducer. Read and record the *Force increment* applied and *Force transducer voltage output* for each force as shown in the Decreasing Force Increments section of figure 5.

11.5.13 Repeat subparagraphs 11.5.10 through 11.5.12 to obtain two sets of reading.

11.5.14 Using the "Force transducer factor," calculate and record the *Force transducer output* (fig. 5).

11.6 *Method B—Calibration Using a Universal Testing Machine* (tension, fig. 6b):

11.6.1 Adjust the signal conditioner so the output of the force transducer is 0.000 volt d-c with zero tensile force on the force transducer.

11.6.2 Adjust all ranges on the universal testing machine to zero.

11.6.3 Attach a ball joint coupler to each side of the force transducer as shown on figure 6b.

11.6.4 Attach the bottom ball joint coupler to the table of the testing machine.

11.6.5 Carefully adjust the controls on the testing machine until the top load plate is low enough so the top ball joint can be attached to it.

11.6.6 Carefully adjust the controls on the testing machine to slowly apply a tension force on the force transducer equal to 100 percent of the rated capacity of the force transducer. Ensure that readings on the testing machine are obtained in its most sensitive range for the force being applied.

11.6.7 Adjust the output of the signal conditioner so it registers ±10.000 volt d-c. The polarity of the signal depends on the wiring of the transducer and the desire of the user. Record the *Voltage output* as shown on figure 5.

11.6.8 Remove the tension force from the force transducer by adjusting the controls on the testing machine so the total force on the force transducer is equal to 0.00 lbf (0.00 N).

11.6.9 If necessary, readjust the signal conditioner so the output is equal 0.000 volt d-c. If it is necessary to again zero the signal conditioner, repeat subparagraphs 11.6.6 through 11.6.8.

CAUTION.–Once the appropriate gain has been set, do not readjust. If it is readjusted, the calibration values are incorrect and the readings are unreliable.

11.6.10 Compute the force required for 20, 40, 60, 80, and 100 percent of the rated capacity of the force transducer. Select the appropriate load range on the testing machine to ensure that readings are obtained in its most sensitive range for the force being applied. Record the RC (*Rated capacity*) of the force transducer and calculate and record the "Force transducer factor" (fig. 5).

11.6.11 Carefully adjust the controls on the testing machine to produce tensile forces equal to 20, 40, 60, 80, and 100 percent of the rated capacity of the force transducer.

11.6.12 Read and record the *Force increment* applied and the *Force transducer voltage output* for each force increment.

11.6.13 Unload the force transducer by carefully adjusting the controls on the testing machine to produce forces corresponding to 80, 60, 40, 20, and 0 percent of the rated capacity of the force transducer.

11.6.14 Read and record the *Force increment* applied and *Force transducer voltage output* for each force increment as shown in the Decreasing Force Increments section of figure 5.

11.6.15 Repeat subparagraphs 11.6.11 through 11.6.14 to obtain two sets of readings.

11.6.16 Using the "Force transducer factor," calculate and record the *Force transducer output* (fig. 5).

11.7 *Creep Test*:

11.7.1 Regardless of the method used to load the force transducer, the procedure is the same for determining creep of the force transducer.

11.7.2 Apply either a tension or compression force on the force transducer equal to 100 percent of rated capacity and read and record the *Force transducer output* as the "Transducer output at zero minutes" (fig. 5).

11.7.3 Maintain the force on the force transducer for a minimum of 30 minutes, and read the *Force transducer voltage output* any time after 30 minutes. Record the time and the force transducer output as "Transducer output at _____ minute" (fig. 5).

11.7.4 Calculate the *Creep % error* (fig. 5).

11.8 Calculate the linearity, hysteresis, and repeatability of the force transducer at each force increment of 0, 20, 40, 60, 80, 100 percent of rated capacity.

11.9 Evaluate the values of error obtained. If the percent error for linearity, hysteresis, repeatability, or creep

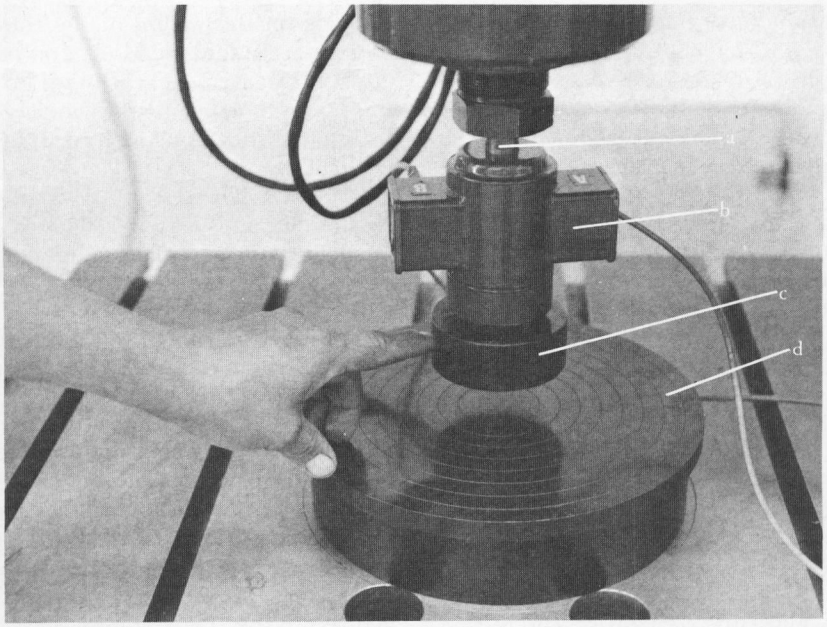

(a) Force transducer calibration using universal testing machine (compression). a) coupler, b) force transducer being calibrated, c) force transducer loading platen, and d) universal testing machine platform base.

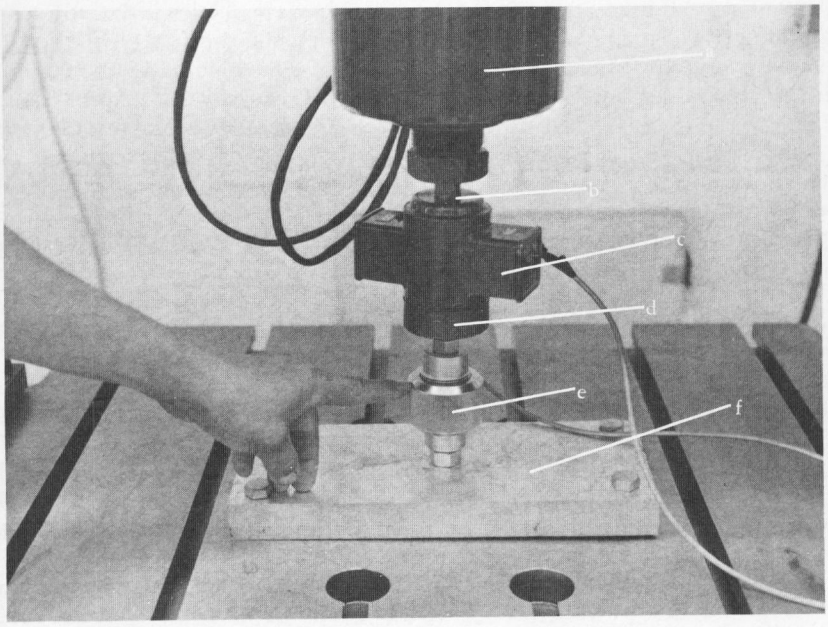

(b) Force transducer calibration using universal testing machine (tension). a) universal testing machine force transducer, b) coupler, c) force transducer being calibrated, d) coupler, e) swivel coupler, and f) platform adaptor.

Figure 6. – Force transducer calibration using universal testing machine.

does not fall within tolerances specified by the manufacturer, the appropriate subparagraphs of the calibration procedure are to be repeated. If the force transducer still does not meet specified requirements, it is rejected for laboratory use.

12. Calculations

12.1 Calculations required for determining linearity, hysteresis, repeatability, and creep of the force transducer are as shown on figure 5.

13. Report

13.1 The report is to consist of a completed and checked "Force Transducer (Load Cell) Calibration" form (fig. 5).

13.2 All calculations are to show a checkmark.

14. Background Reference

14.1 "Handbook of Measurement and Control," *Handbook HB-76*, copyright 1976 by Schaevitz Engineering, Pennsauken, NJ, Library of Congress Catalog No. 76-24971.

UNITED STATES DEPARTMENT OF THE INTERIOR
BUREAU OF RECLAMATION

USBR 1050-89

PROCEDURE FOR

CALIBRATING PRESSURE TRANSDUCERS

INTRODUCTION

This procedure is under the jurisdiction of the Geotechnical Services Branch, code D-3760, Research and Laboratory Services Division, Denver Office, Denver, Colorado. The procedure is issued under the fixed designation USBR 1050. The number immediately following the designation indicates the year of acceptance or the year of last revision.

1. Scope

1.1 This designation outlines the procedure for calibrating pressure transducers.

1.2 This calibration procedure is used to determine the accuracy of pressure transducers over the full pressure range as set forth in the manufacturer's specifications.

2. Auxiliary Tests

2.1 The pressure gauge used in this procedure must be calibrated in accordance with USBR 1040 prior to performing this calibration procedure.

3. Applicable Documents

3.1 *USBR Procedures*:
USBR 1040 Calibrating Pressure Gauges
USBR 3900 Standard Definitions of Terms and Symbols Relating to Soil Mechanics

4. Summary of Method

4.1 A pressure transducer and a standard pressure gauge are connected to a pressure source. Pressure is applied in predetermined increments over the full range of the pressure transducer. The pressure transducer voltage output is compared at each increment to a pressure gauge reading. The percent error of the pressure transducer when compared to the pressure gauge reading is calculated for each pressure increment over the full range calibrated. From these percent error values, a determination is made to accept or reject the pressure transducer for laboratory use.

5. Significance and Use

5.1 A calibrated pressure transducer must be used in the laboratory to ensure reliable test results.

5.2 This calibration procedure is to be performed upon receipt of the pressure transducer and annually thereafter.

6. Terminology

6.1 Definitions are in accordance with USBR 3900.

6.2 Terms not included in USBR 3900 specific to this designation are:

6.2.1 *Hermetically Sealed.*–A process by which a device is sealed and guaranteed to be airtight.

6.2.2 *Pressure Transducer.*–An electronic transducer that translates changes in pressure into changes in voltage. This change in voltage produces, in the readout system, a repeatable signal or indication that can be calibrated in terms of pressure applied to the transducer.

6.2.3 *Readout System.*–An electronic apparatus which accepts the output signal from a signal conditioner and converts it into a display and a record of the output signal.

6.2.4 *Signal Conditioner.*–An electronic apparatus necessary to make the output signal from a transducer compatible with the readout system. It also provides the excitation for a passive transducer element, such as a pressure transducer.

6.2.5 *Traceability Certificate.*–A certificate of inspection certifying that a measurement device meets the Federal specification for its particular grade or model and whose accuracy is traceable to the National Institute of Standards and Technology (National Bureau of Standards) or an International Standard.

7. Apparatus

7.1 *Pressure Transducer* (fig. 1).–A transducer which converts a pressure input into an electrical output.

7.1.1 Components of the pressure transducer must have the following characteristics:

7.1.1.1 Electrical parts of the transducer must be hermetically sealed to prevent damage to internal components in the event of exposure to moisture.

7.1.1.2 The transducer must be threaded with appropriate threaded fittings to attach the transducer to standard pipe fittings.

7.1.1.3 Cable connections must be securely fastened to the body of the transducer.

7.2 *Pressure Gauge.*–A bourdon tube air pressure gauge whose range equals or exceeds that of the pressure transducer being calibrated is to be used. The gauge must have a current calibration accompanied with a certificate of traceability.

7.3 *Pressure Source.*–An air pressure source capable of delivering and maintaining pressure up to the maximum rated pressure of the transducer is required.

7.4 *Readout System.*–A voltmeter or a computer must be used to provide a visual display of the signal being sent from the signal conditioner.

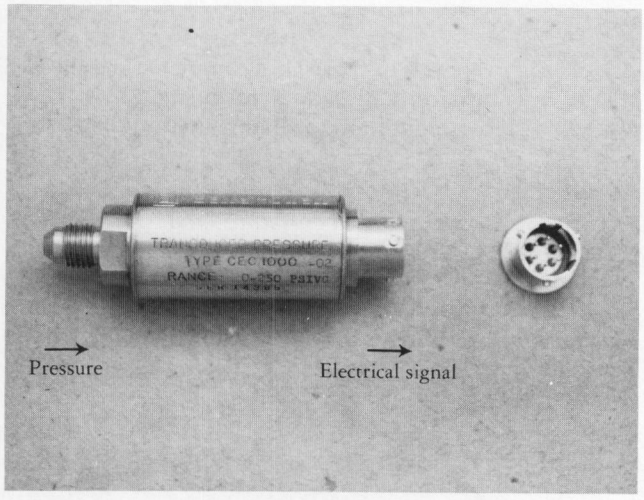

Figure 1. – Pressure transducer.

7.5 *Signal Conditioner.*–A signal conditioner must be used to make the transducer output compatible with the readout system.

8. Precautions

8.1 *Safety Precautions*:

8.1.1 This designation may involve hazardous materials, operations, and equipment.

8.1.2 Verify that all electrical wiring is properly connected.

8.1.3 Examine the pressure transducer body for burrs and sharp edges.

8.1.4 This designation involves the use of high air pressure. Appropriate precautions must be taken.

8.2 *Technical Precautions*:

8.2.1 Use the same cables for calibrating the transducer and for performing a test. A different cable length will change the resistance of the circuit and will result in a change in calibration.

8.2.2 It is recommended that the serial number be used for control purposes. Use a marking pencil rather than a scribe to mark on the transducer body. If the transducer must be marked use extreme care.

8.2.3 The transducer must be stored in a suitable box or case when not in use.

9. Calibration and Standardization

9.1 Verify that the pressure gauge used is currently calibrated in accordance with USBR 1040. If the calibration is not current, perform the calibration before using the equipment for this calibration procedure.

9.2 Verify that the readout system used is currently calibrated. If the calibration is not current it is to be performed in accordance with the manufacturer's guidelines. At the Bureau's Denver Office, a computer is used to accept the output signal from the signal conditioner and convert it into a transducer measurement. A voltmeter also may be used as the readout system for this calibration procedure.

10. Conditioning

10.1 During the calibration procedure the room temperature should not vary more than ±10 °C.

10.2 Allow all electronic equipment to warm up for at least 30 minutes before use to ensure stability.

10.3 Place the pressure transducer and calibration standards in the environment in which they are to be calibrated for at least 24 hours prior to the time of calibration.

11. Procedure

11.1 All data are to be recorded on the "Pressure Transducer Calibration" form as shown on figure 2.

11.2 Locate and record the serial number or control number of the pressure transducer.

11.3 Determine and record the pressure range to be calibrated.

11.4 Connect the electrical end of the transducer to the excitation source and readout instrument. Follow the manufacturer's recommendation for how much voltage to apply to the signal conditioner.

11.5 Connect the transducer to a pressure source which is connected to a calibrated pressure gauge.

11.6 Take a reading of the pressure transducer with no pressure on the system.

11.7 Record the pressure transducer output as the *Readout response* on the form.

11.8 Use table 1 to determine the appropriate pressure increments to be used depending on the range of the pressure transducer being calibrated.

11.9 Raise the pressure in the appropriate increments given in table 1 and determine the gauge reading and corresponding transducer output.

11.10 Record the pressure gauge reading and the corresponding pressure transducer output as the *Applied pressure* and *Readout response*, respectively on the calibration form as shown on figure 2.

11.11 Repeat subparagraphs 11.9 and 11.10 for the full pressure range to be calibrated.

11.12 Release the system pressure to zero.

11.13 Calculate the pressure transducer error and percent error for each pressure increment.

11.14 Evaluate the values of error obtained. If the percent error for the transducer does not fall within the tolerances specified by the manufacturer, subparagraphs 11.6 through 11.12 are to be repeated. If the pressure transducer still does not meet the specified requirements, it is to be rejected for laboratory use.

Table 1. – Recommended pressure increments for calibrating pressure transducers

Pressure range		Pressure increment	
lbf/in²	kPa	lbf/in²	kPa
0 – 200	0 – 1400	25	175
200 – 1000	1400 – 7000	100	700

12. Calculations

12.1 Determine pressure transducer error for each pressure increment.

$$\text{Error} = \text{applied pressure} - \text{readout response}$$

12.2 Determine percent error for each pressure increment.

$$\text{Percent error} = 100 \left(\frac{\text{error}}{\text{applied pressure}} \right)$$

13. Report

13.1 The report is to consist of a completed and checked "Pressure Transducer Calibration" form (fig. 2).

13.2 All calculations are to show a checkmark.

14. Background References

Electrical Transducer Nomenclature and Terminology, ANSI, ISA-S37.1, Research Triangle Park, North Carolina, December 1982.

Specifications and Tests for Strain Gage Pressure Transducers, ANSI, ISA-S37.3, Research Triangle Park, North Carolina, December 1982.

7-2307 (6-85)
Bureau of Reclamation

PRESSURE TRANSDUCER CALIBRATION

Designation USBR 1050 - 89 ___

Manufacturer Example Serial No. 14385 Range 0 - 7000kPa

Calibration performed by _____ Date _____

Calibration checked by _____ Date _____

Trial Number	Applied pressure (kPa)	Readout response (kPa)	Error (kPa)	Error %	
	0	0	0	0	
1	172	172	0	0	
	345	345	0	0	
	517	517	0	0	
	689	688	1	0.15	
	861	860	1	0.12	
	1034	1033	1	0.10	
	1206	1204	2	0.17	
	1378	1376	2	0.15	
	2067	2064	3	0.15	
	2756	2753	3	0.11	
	3445	3441	4	0.12	
	4134	4129	5	0.12	
	4823	4817	6	0.12	
	5512	5505	7	0.13	
	6201	6194	7	0.11	
	6890	6882	8	0.12	
2	0	0	0	0	

REMARKS

GPO 847 - 972

Figure 2. – Pressure transducer calibration – example.

UNITED STATES DEPARTMENT OF THE INTERIOR
BUREAU OF RECLAMATION

USBR 1055-89

PROCEDURE FOR

CALIBRATING DIFFERENTIAL PRESSURE TRANSDUCERS

INTRODUCTION

This procedure is under the jurisdiction of the Geotechnical Services Branch, code D-3760, Research and Laboratory Services Division, Denver Office, Denver, Colorado. The procedure is issued under the fixed designation USBR 1055. The number immediately following the designation indicates the year of acceptance or the year of last revision.

1. Scope

1.1 This designation outlines the procedure for calibrating differential pressure transducers by establishing a relationship between transducer output and change in height of a water column (volume tube). From this relationship the linearity, hysteresis, and repeatability of the differential pressure transducer are determined.

1.2 A lateral pressure correction factor which is defined as the slope of a line relating the difference between observed volume tube readings and differential pressure transducer output to applied lateral pressure is also determined [1].[1]

NOTE 1.–This procedure was prepared for calibrating differential pressure transducers used to measure volume change of soil specimens associated with laboratory triaxial shear testing as shown on figure 1. With some modifications it may also be used to calibrate differential pressure transducers used in other laboratory testing.

2. Auxiliary Tests

2.1 The pressure gauge and volume tube used in this procedure must be calibrated in accordance with USBR 1040 and 1455 respectively prior to performing this calibration procedure.

3. Applicable Documents

3.1 *USBR Procedures*:
USBR 1040 Calibrating Pressure Gauges
USBR 1455 Calibrating Volume and Drain Tubes
USBR 3900 Standard Definitions of Terms and Symbols Relating to Soil Mechanics

4. Summary of Method

4.1 A differential pressure transducer is attached to a testing apparatus in which the height of a column of water in a volume tube can be measured both electronically and visually. The volume tube is filled with de-aired water and drained or filled as appropriate to change the height of water column. The change in height of water column is compared to the output from the differential pressure transducer at selected intervals over the range to be calibrated. The linearity, hysteresis, and repeatability of the differential pressure transducer are determined.

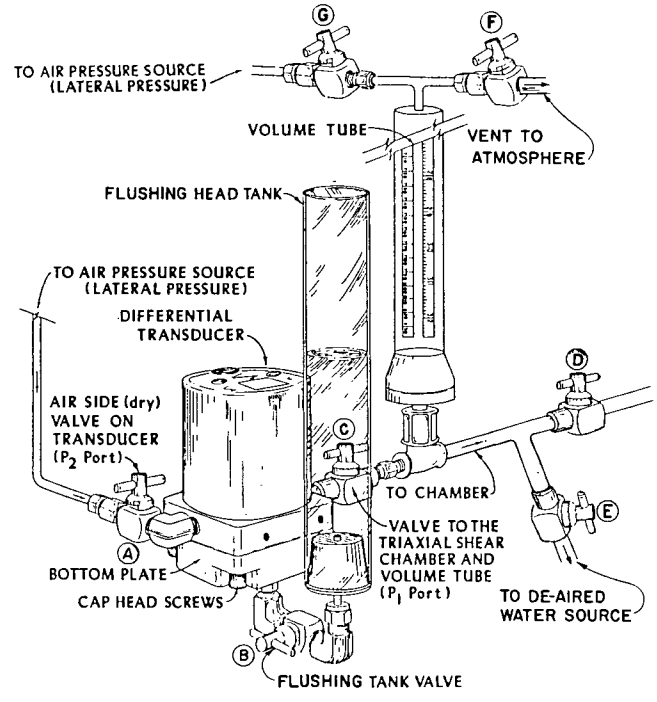

Figure 1. – Differential pressure transducer mounted on a triaxial shear machine.

5. Significance and Use

5.1 Calibrated differential pressure transducers may be used in the laboratory to obtain data electronically which allows the calculation of volume change or flow rate.

5.2 This calibration procedure is to be performed when the differential pressure transducer is put into service and verified before each test.

6. Terminology

6.1 Definitions are in accordance with USBR 3900.

6.2 Terms not included in USBR 3900 specific to this designation are:

[1] Number in brackets refers to reference.

6.2.1 *Linearity.*-The variation of transducer output from a straight line. In this procedure, measurements are obtained using a series of reference pressures (water column heights) applied over the total rated capacity of the differential pressure transducer.

6.2.2 *Repeatability.*-The maximum difference between transducer outputs for repeated pressures (water column heights) under identical loading and environmental conditions.

6.2.3 *Hysteresis.*-The maximum difference between transducer output for the same applied pressure; one reading obtained by decreasing the pressure from the upper calibration limit (not to exceed the transducer rated capacity) to zero, and the other by increasing the pressure from zero to the upper calibration limit.

6.2.4 *Rated Capacity.*-The maximum differential pressure the transducer is designed to measure.

7. Apparatus

7.1 *Differential Pressure Transducer.*-A differential pressure transducer, as shown on figure 2, of sufficient range and accuracy for its intended laboratory testing application.

7.2 *Pressure Gauge.*-A bourdon tube air pressure gauge having a range equal to or greater than that of the differential pressure transducer to be calibrated. The gauge must have a current calibration accompanied with a certificate of traceability.

7.3 *Pressure Source.*-An air pressure source capable of delivering and maintaining pressure up to the maximum rated pressure of the transducer.

7.4 *Digital Voltmeter.*-A voltmeter having a digital display of the electrical signal being sent from the signal conditioner which can be read accurately to the nearest 1 millivolt.

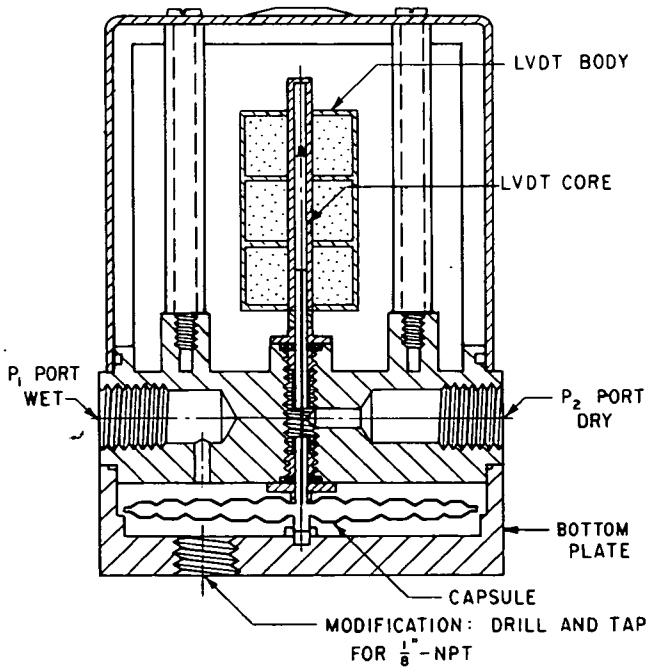

Figure 2. - Cutaway view of differential pressure transducer.

7.5 *Head Tank and Volume Tube.*-A head tank and volume tube as shown on figure 1. The volume tube should be graduated to be read to the nearest 0.01 inch over the range of typical use.

7.6 *De-aired Water.*-De-aired water, as described in subparagraph 8.1, is used for performing the calibration of the differential pressure transducer.

7.7 *Vacuum Pump.*-A hand-held vacuum pump used to remove entrapped air from the system.

7.8 *Signal Conditioner.*-A signal conditioner must be used to make the differential pressure transducer output compatible with the readout system.

7.9 *Miscellaneous Equipment.*-Appropriate size valves and pipe fittings used to attach the differential pressure transducer to the testing apparatus.

8. Reagents and Materials

8.1 De-aired water that is free of acids, alkalies, or oils, and is suitable for drinking should be used for calibrating the differential pressure transducer.

9. Precautions

9.1 *Safety Precautions*:

9.1.1 Ensure that all electrical wiring is properly connected.

9.1.2 Examine the differential pressure transducer body for burrs and sharp edges.

9.1.3 This procedure involves the use of compressed air. Appropriate precautions must be taken.

9.2 *Technical Precautions*:

9.2.1 Modifications to the procedure (outlined in par. 12) are required for calibration of differential pressure transducers used in applications other than on the triaxial shear assembly shown on figure 1. (See note 2.)

9.2.2 Use the same electrical cables for calibrating the transducer and for performing a test. A different cable length will change the resistance of the circuit and will result in a change in calibration.

9.2.3 It is recommended that the serial number be used for identification. If the transducer must be marked, use extreme care. Use an indelible marking pencil rather than a scribe to mark on the transducer body.

9.2.4 The transducer must be stored in a suitable box or case when not in use.

10. Calibration and Standardization

10.1 Verify that the pressure gauge and the volume tube used are currently calibrated in accordance with USBR 1040 and 1455 respectively. If the calibration is not current, perform the calibration before using the equipment for this procedure.

10.2 Verify that the readout system is currently calibrated. If the calibration is not current, it is to be calibrated in accordance with the manufacturer's guidelines. A voltmeter may be used as the readout system for this

calibration procedure. At the Bureau's Denver Office, a computer is used to accept the output signal from the signal conditioner and convert it into a transducer measurement.

11. Conditioning

11.1 Perform this calibration procedure in an area isolated from wide temperature variations and electrical power surges.

11.2 To ensure stability allow all electronic equipment to warm up a minimum 30 minutes before use.

11.3 Place the differential pressure transducer, pressure gauge, volume tube, and electronic equipment in the environment in which they are to be calibrated at least 24 hours prior to time of calibration.

12. Procedure

NOTE 2.–The following procedure is for calibration of a differential pressure transducer mounted on a triaxial shear assembly as shown on figure 1. Generally, the calibration procedure outlined in this designation can be used for calibrating differential pressure transducers used for other applications; however, modifications to the procedure presented here may be necessary.

12.1 All data are to be recorded on the "Differential Pressure Transducer Calibration Sheet" as shown on figure 3.

12.2 Locate and record the rated capacity, serial number and manufacturer of the differential pressure transducer.

12.3 Record the water column height differential for which the differential pressure transducer is to be calibrated as the *CR* (*Calibration range*). (For the example used in this procedure the value is 30.00 inches.)

12.4 Close the valve between the differential pressure transducer and the volume tube. Open the valve on the "dry" side to the differential pressure transducer so that the "dry" side is open to atmospheric pressure.

12.5 Close the valve from the volume tube to the triaxial shear chamber (valve D on fig. 1) and fill the volume tube with de-aired water by opening valve E to the de-aired water source. (At least fill to the 10-inch (254-mm) level for a 32-inch (813-mm) volume tube.)

12.6 Close the valve from the flushing tank to the differential pressure transducer (valve B on fig. 1) and fill the flushing tank about one-half full with de-aired water.

12.7 Remove the bottom plate on the differential pressure transducer by unscrewing the cap head screws that hold the bottom plate to the body of the transducer.

12.8 Open valve B to the flushing tank and allow water to cover the exposed capsule.

12.9 Leave the flushing tank valve slightly open. If the flushing tank valve is not left slightly open, while the bottom plate is being placed, damage may occur to the capsule.

12.10 Fill the cavity in the bottom plate with deaired water. Securely place the bottom plate back onto the differential pressure transducer while being careful not to entrap air.

12.11 Open the valves that connect the flushing tank and volume tube to the differential pressure transducer.

12.12 Secure the rubber stopper attached to the hand held vacuum/pressure pump to the top of the flushing tank and pump de-aired water from the flushing tank through the transducer into the volume tube and back into the flushing tank.

12.13 Close both the flushing tank and volume tube valves.

NOTE 3.–Use extreme caution when flushing the system. A flushing pressure greater than 10 lbf/in^2 (70 kPa) can damage the measuring capsule inside the differential pressure transducer.

12.14 Using appropriate cables, connect a voltmeter and signal conditioner to the pressure transducer.

12.15 Activate the voltmeter and select a range capable of measuring at least 5-volts d.c.

12.16 Disconnect the lateral pressure air hose which runs from the triaxial shear assembly control panel to the top of the volume tube. Open the valve at the top of the volume tube (valve F on fig. 1) so the top of the volume tube is open to atmospheric pressure.

NOTE 4.–If the lateral pressure hose is not disconnected from the control panel, the regulator often allows a small amount of air to leak through it, and the differential pressure transducer will function erratically. The transducer output will not stabilize because the applied pressure is unsteady.

12.17 Open the valves from the transducer to the flushing tank and volume tube and slowly drain water in the volume tube to the 30.00-inch mark on the volume tube. Close the flushing tank valve.

12.18 Read and record the voltmeter output as the *Voltage output at minimum volume tube height.* The voltmeter should register 1.000±0.004 volts. If it does not, adjust the zero screw on the differential pressure transducer until the correct reading is obtained. The zero screw on the differential pressure transducer adjusts the gain on the amplifier.

12.19 Open the valve to the de-aired water supply (valve E on fig. 1) to fill the volume tube with de-aired water to the 0.00-inch mark on the scale; close the valve and read and record the voltmeter output as the *Voltage output at maximum volume tube height.* The voltmeter should read 4.000±0.004 volts. If it does not, adjust the span screw on the differential pressure transducer.

12.20 Repeat subparagraphs 12.17 through 12.19 until the desired values are obtained.

12.21 If more than five trials are necessary to obtain the desired values, the unit should be examined for leaks or entrapped air and this portion of the procedure repeated.

12.22 Determine the linearity, hysteresis, and repeatability.

12.22.1 Fill the volume tube to the 0.00-inch marking on the scale by opening the valve to the de-aired water supply (valve E).

12.22.2 Close valve E and record the volume tube reading and the differential pressure transducer output as the *Volume tube water column height, in* and *Pressure transducer output, V,* under the "Decreasing head" section as shown on figure 3.

7-2366 (10-86)
Bureau of Reclamation

DIFFERENTIAL PRESSURE TRANSDUCER
CALIBRATION SHEET

Designation USBR 1055-89

MANUFACTURER	SERIAL NO.
Example	1

RATED CAPACITY	CR (Calibration range)
50.0	30.0 inch of H_2O

CALIBRATION PERFORMED BY	DATE	COMPUTED BY	DATE	CHECKED BY	DATE

(a)	VOLTAGE OUTPUT AT MINIMUM VOLUME TUBE HEIGHT	1.000 V
(b)	VOLTAGE OUTPUT AT MAXIMUM VOLUME TUBE HEIGHT	4.000 V
(c)	DIFFERENCE IN VOLTAGE OUTPUT (a)-(b)	-3.000 V
(d)	SLOPE OF CALIBRATION LINE = (CR)/(c)	-10.00 in/V
(e)	(CR) - (d)(a)	40.00 in

DECREASING HEAD			INCREASING HEAD		
VOLUME TUBE WATER COLUMN HEIGHT (in) (1)	PRESSURE TRANSDUCER OUTPUT (V) (2)	PRESSURE TRANSDUCER OUTPUT (Inch of H_2O) = (d)(2) + (e) (3)	VOLUME TUBE WATER COLUMN HEIGHT (in) (4)	PRESSURE TRANSDUCER OUTPUT (V) (5)	PRESSURE TRANSDUCER OUTPUT (Inch of H_2O) = (d)(5) + (e) (6)
Trial No. 1					
0.00	3.999	0.01	0.00	4.003	-0.03
5.00	3.499	5.01	5.00	3.502	4.98
10.00	2.998	10.02	10.00	3.001	9.99
15.00	2.499	15.01	15.00	2.501	14.99
20.00	1.998	20.02	20.00	1.999	20.01
25.00	1.501	24.99	25.00	1.501	24.99
30.00	0.999	30.01	30.00	0.999	30.01
Trial No. 2					
0.00	4.003	-0.03	0.00	3.999	0.01
5.00	3.500	5.00	5.00	3.500	5.00
10.00	2.999	10.01	10.00	3.001	9.99
15.00	2.499	15.01	15.00	2.502	14.98
20.00	2.003	19.97	20.00	2.001	19.99
25.00	1.501	24.99	25.00	1.499	25.01
30.00	0.999	30.01	30.00	0.999	30.01

LINEARITY % ERROR	HYSTERESIS % ERROR	REPEATABILITY % ERROR
$\left\lvert\frac{(1)-(3)}{(CR)}\right\rvert \times 100$	$\left\lvert\frac{(3)-(6)}{(CR)}\right\rvert \times 100$	$\left\lvert\frac{(3)1st-(3)2nd}{(CR)}\right\rvert \times 100$
Trial No. 1		
0.03	0.13	0.13
0.03	0.10	0.03
0.07	0.10	0.03
0.03	0.07	0.00
0.07	0.03	0.17
0.03	0.00	0.00
0.03	0.00	0.00
Trial No. 2		
0.10	0.13	
0.00	0.00	
0.03	0.07	
0.03	0.10	
0.10	0.07	
0.03	0.07	
0.03	0.00	

ACCEPT [X]
REJECT [ ]

REMARKS: _____

Figure 3. - Differential pressure transducer calibration sheet — example.

12.22.3 Open the valve to the flushing tank and allow water in the volume tube to drain 5.00 inches (127 mm) and close the valve.

12.22.4 Repeat subparagraphs 12.22.2 and 12.22.3 for the full range to be calibrated.

12.22.5 Open the valve to the water source (valve E) and allow the water level to rise in the volume tube 5.00 inches.

12.22.6 Record the volume tube reading and the differential pressure transducer output as the *Volume tube water column height, in*, and *Pressure transducer output, V*, under the "Increasing head" section as shown on figure 3.

12.22.7 Repeat subparagraphs 12.22.5 and 12.22.6 until the water level in the volume tube is elevated to the 0.00-inch mark on the scale.

12.22.8 Repeat subparagraphs 12.22.1 through 12.22.7 to obtain a second set of readings.

12.22.9 Calculate and record the *Pressure transducer output, Inch of H_2O*, for each pressure (volume tube water column height, in) increment as shown on figure 3.

12.22.10 Calculate the differential pressure transducer linearity, hysteresis, and repeatability for each pressure (volume tube water column height, in) increment.

12.22.11 Evaluate the values of error obtained. If the percent error for linearity, hysteresis, or repeatability does not fall within the tolerances specified by the manufacturer, the calibration procedure is to be repeated. If the differential pressure transducer still does not meet specified requirements, it is to be rejected for laboratory use.

12.23 Determine the lateral pressure correction factor.

NOTE 5.–Specimen volume change during laboratory testing of soil, e.g., triaxial shear or back pressure permeability, can be measured by determining the amount of water entering or leaving a confining pressure cell. Research performed in the Bureau's Geotechnical Services Branch, Research and Laboratory Services Division, Denver Office, Denver, Colorado, demonstrated the feasibility of using a differential pressure transducer for soil specimen volume change measurement [1]. To accurately measure specimen volume change using a differential pressure transducer, the response of the differential pressure transducer to varying applied lateral pressures must be determined. This relationship is used to determine a lateral pressure correction factor.

12.23.1 All data are to be recorded on the "Lateral Pressure Correction Factor" form as shown on figure 4.

12.23.2 De-air and flush the volume tube and differential pressure transducer as outlined in subparagraphs 12.4 through 12.17.

12.23.3 Set the water level in the volume tube at about the 10-inch (254-mm) mark on the scale and record the value as the *Volume tube water column height, in.*

12.23.4 Ensure that the lateral pressure gauge reading is 0.0 lbf/in^2 and record the value as the *Applied lateral pressure.*

12.23.5 Connect one end of the lateral pressure line to the valve at the top of the volume tube and the other end to the lateral pressure gauge on the control panel.

12.23.6 Close the valves located at the top of the volume tube (valves F and G on fig. 1).

12.23.7 Raise the lateral pressure approximately one-eighth the differential pressure transducer rated capacity and record the value of lateral pressure applied as indicated by the lateral pressure gauge. Slowly open the valve G located at the top of the volume tube.

12.23.8 Allow the system to stabilize a minimum of 5 minutes at each lateral pressure increment. Read and record the *Volume tube water column height, in* and the *Pressure transducer output, V*, as shown on figure 4.

12.23.9 Raise the lateral pressure in increments of approximately one-eighth the differential pressure transducer rated capacity and repeat subparagraph 12.23.8 for the full range to be calibrated.

12.23.10 Calculate and record the *Pressure transducer output, Inch of H_2O* as shown on figure 4.

12.23.11 Calculate the difference between the *Volume tube water column height, in* and the *Pressure transducer output, Inch of H_2O* for each lateral pressure increment.

12.23.12 Plot the data obtained as shown on figure 5.

12.23.13 Calculate the equation of the calibration line. The slope of the line is equal to the lateral pressure correction factor.

13. Calculations

13.1 The calculations of linearity, hysteresis, and repeatability are as shown on figure 3.

13.2 Calculations required to determine the lateral pressure correction factor are as shown on figure 4 and 5.

14. Report

14.1 The report is to consist of the following completed and checked forms and plot:

"Differential Pressure Transducer Calibration Sheet" (fig. 3).

"Lateral Pressure Correction Factor" (fig. 4).

A plot of the obtained data (fig. 5).

14.2 All calculations are to show a checkmark and all plotting must be checked.

15. Reference

[1] Benavidez, Abel A., *Utilization of Differential Pressure Transducers to Measure Volume Change of Soil Specimens During Triaxial Shear Testing*, Bureau of Reclamation Report No. REC-ERC-84-10, 22 pp., Denver, Colo., April 1984.

LATERAL PRESSURE CORRECTION FACTOR

Designation USBR 1055-89

(1) APPLIED LATERAL PRESSURE psi [X] kPa [ ]	(2) VOLUME TUBE WATER COLUMN HEIGHT (in)	(3) PRESSURE TRANSDUCER OUTPUT (V)	(4) = (d*)(3) + (e*) PRESSURE TRANSDUCER OUTPUT (inch of H_2O)	(5) |(2)-(4)|	(6) ORDERED PAIRS	
					(1)	(5)
0.0	10.00	2.999	10.01	0.01	0.0	0.01
25.0	10.00	2.994	10.06	0.06	25.0	0.06
50.0	10.01	2.987	10.13	0.12	50.0	0.12
75.0	10.03	2.980	10.20	0.17	75.0	0.17
100.0	10.04	2.973	10.27	0.23	100.0	0.23
125.0	10.05	2.967	10.33	0.28	125.0	0.28
150.0	10.07	2.959	10.41	0.34	150.0	0.34
175.0	10.09	2.952	10.48	0.39	175.0	0.39
200.0	10.11	2.945	10.55	0.44	200.0	0.44

*Values obtained from differential pressure transducer calibration.

(d) = -10.00

(e) = 40.00

GPO 852-233

Figure 4. – Lateral pressure correction factor — example.

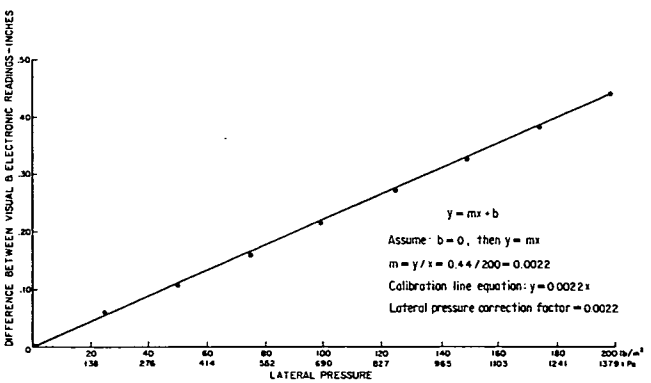

Figure 5. – Plot of lateral pressure correction factor — example.

UNITED STATES DEPARTMENT OF THE INTERIOR
BUREAU OF RECLAMATION

USBR 1060-89

PROCEDURE FOR

CALIBRATING THE CALCIUM CARBIDE REACTION DEVICE

INTRODUCTION

This procedure is under the jurisdiction of the Geotechnical Services Branch, code D-3760, Research and Laboratory Services Division, Denver Office, Denver, Colorado. This procedure is issued under the fixed designation USBR 1060. The number immediately following the designation indicates the year of acceptance or the year of last revision.

1. Scope

1.1 This designation outlines the procedure for calibrating the CCRD (calcium carbide reaction device). A CCRD can be used to determine the moisture content of certain soils when not enough time is available to use the oven method (USBR 5300).

1.2 When the CCRD is used to determine moisture content, calibration is required to obtain accurate test results.

1.3 This calibration procedure is applicable for the 6-, 26-, and 142-gram CCRD.

1.4 The CCRD method of determining moisture content is limited to soils, or the portion of a soil, passing the U.S.A. Standard series No. 4 (4.75 mm) sieve.

1.5 The CCRD method of determining moisture content is limited to soils having a moisture content of 40 percent or less.

2. Auxiliary Tests

2.1 Test samples must be obtained in accordance with USBR 5205 prior to performing this procedure. The soil samples should be classified using either USBR 5000 or USBR 5005. During the calibration process, the moisture content is determined by both USBR 5300 (oven method) and USBR 5310 (calcium carbide method).

3. Applicable Documents

3.1 *USBR Procedures*:

USBR 3900 Standard Definitions of Terms and Symbols Relating to Soil Mechanics
USBR 5000 Determining Unified Soil Classification (Laboratory Method)
USBR 5005 Determining Unified Soil Classification (Visual Method)
USBR 5205 Preparing Soil Samples by Splitting or Quartering
USBR 5300 Determining Moisture Content of Soil and Rock by the Oven Method
USBR 5310 Determining Moisture Content of Soils Using the Calcium Carbide Reaction Device

4. Summary of Method

4.1 Each CCRD is calibrated for each soil type that may be tested. Specimens of each soil type are prepared at various moisture contents and each moisture content is determined using both the oven method (USBR 5300) and the CCRD method (USBR 5310).

The CCRD method consists of placing a prescribed amount of calcium carbide reagent and two steel balls into the chamber of the CCRD. A soil specimen is placed in the cap, and the cap is inserted in the end of the pressure vessel and sealed. The CCRD with soil, reagent, and steel balls is rotated manually for 3 minutes. The moisture in the soil reacts with the calcium carbide to produce a specific volume of acetylene gas. The gas pressure is read on a pressure gauge located on one end of the pressure vessel. The gauge is calibrated to read in percent of moisture based on the wet mass of the soil specimen.

The moisture contents obtained by the oven method and the CCRD method are plotted against each other. A calibration is developed to express the relationship between CCRD readings and the ovendried moisture content based on dry mass of soil. A statistical analysis may be performed to determine a mathematical relationship between the two. Depending on need, the mathematical relationship may be indicated in graphical form (calibration plot), denoted by tabular values, or expressed as an equation.

5. Significance and Use

5.1 A CCRD can be used to determine moisture content of certain soils when (1) not enough time is available to use the oven method, and (2) moisture content values within ± 1 percent of the ovendried moisture content are acceptable.

5.1.1 For more accurate moisture content determinations, the ovendrying method (USBR 5300) must be used.

5.2 A calibration table normally is supplied with the CCRD. However, to obtain accurate moisture content values, a calibration plot or equation must be prepared for each individual device and for each soil type tested.

5.2.1 "Soil type" means soils that have different Unified Soil Classification System symbols.

5.3 Calibration must be redetermined at least once every year or 1000 tests, whichever occurs first.

5.3.1 The same soil should be used for succeeding calibrations. An adequate supply of this soil must be stored in moisture proof, airtight containers and appropriately marked for future use.

5.3.2 Compare each succeeding calibration to the previous calibration. If CCRD readings are more than two percentage points different than the previous determination, the CCRD must be recalibrated using a "calibration kit" available from the manufacturer or discarded.

NOTE 1.–A change in readings of more than two percent may be an indication of a problem such as a pressure leak, etc.

6. Terminology

6.1 Definitions are in accordance with USBR 3900.

7. Apparatus

7.1 *General Apparatus*:

7.1.1 Equipment used for USBR 5300.

7.1.2 Equipment used for USBR 5310.

7.2 *Equipment* (optional).–Programmable calculator or computer with regression analysis capabilities.

8. Reagents and Materials

8.1 *Calcium Carbide* (CaC_2).–Use only small grain-size reagent (finely ground). The reagent is available from the source for the CCRD and usually is purchased as a carton of 24 1-lbm cans.

9. Precautions

9.1 *Safety Precautions*:

9.1.1 Calcium carbide (CaC_2) reagent used in the CCRD produces acetylene gas when it reacts with water from moist soil. The CCRD must be used outdoors or in a well-ventilated area. Inhalation of acetylene for prolonged periods in a confined, unventilated area can be detrimental to health.

9.1.2 After testing, the built-up pressure within the CCRD should be released away from a person's body or face and in a downwind direction.

9.1.3 After several successive tests have been performed, the exterior of the CCRD becomes hot and use of gloves is recommended for protection.

9.1.4 Acetylene gas, when under pressure, is extremely flammable. Tests should be performed clear of electrical sparking, and smoking or open flame should not be permitted in the testing area. If a fire results, water should *not* be used to put out the fire. A fire blanket or an ABC class dry chemical fire extinguisher should be used.

CAUTION: This procedure requires use of hazardous materials. It is the responsibility of the person using this procedure to establish appropriate safety practices and to determine, prior to use, the applicability of regulatory limitations.

9.1.5 Calcium carbide should be stored in a locked, moisture proof container.

9.1.6 Federal regulations state that calcium carbide reagent can be shipped only by surface motor truck freight in the United States.

10. Sampling, Test Specimens, and Test Units

10.1 *Sample Preparation*:

10.1.1 Samples selected for testing must include all probable soil types in a particular area, project, or site which may be tested using the CCRD.

10.1.2 Test samples should be selected in accordance with USBR 5205.

10.1.3 A minimum of 5000 or 10 000 grams (about 11 or 22 lbm) of each soil type is required for moisture content testing by both moisture content determination methods. The number of specimens to be prepared depends on the range of moisture contents to be evaluated. At least 10 specimens should be prepared—at moisture content increments of about 2 percentage points—to cover a range from 10 points drier to 10 percentage points wetter than the average anticipated moisture content. A larger number of specimens may be required, but the increment of moisture content should remain at about 2 percentage points. For each specimen, about 500 grams (1 lbm) is required for the 6-gram and 26-gram CCRD; and about 1000 grams (2 lbm) is required for the 142-gram CCRD.

10.1.4 Thoroughly mix the soil sample. Determine the moisture content in accordance with USBR 5300 to ascertain how many specimens require water to be added or subtracted to cover the desired moisture content range.

10.2 *Specimen Preparation*:

10.2.1 Split the soil sample into the desired number of specimens using a sample splitter.

10.2.2 Add water to (or dry back) each specimen to obtain increments of moisture content of about 2 percentage points. This may be done on the wet mass basis, e.g., add 10 grams of water to the 500-gram specimen at natural moisture to obtain a moisture content of about 2 percentage points higher than the natural moisture.

10.2.3 After thorough mixing, store each specimen in moisture-tight plastic bags for at least 24 hours (see par. 12).

11. Calibration and Standardization

11.1 Verify that equipment is currently calibrated in accordance with the applicable calibration procedure. If the calibration is not current, perform the calibration before using the equipment for this procedure.

12. Conditioning

12.1 If water is added to a soil specimen to obtain the approximate moisture content, the specimen should be stored in a moisture-tight plastic bag for 24 hours. The bagged specimens should be kept in a cool, humid storage area. This procedure facilitates uniform moisture distribution throughout the specimens.

13. Procedure

13.1 All data are to be recorded on the "Calcium Carbide Reaction Device (CCRD) Calibration" form as shown on figure 1.

7-2351 (5-86) Bureau of Reclamation	CALCIUM CARBIDE REACTION DEVICE (CCRD) CALIBRATION	Designation USBR 1060-89

PROJECT Example FEATURE CCRD Calibration

SAMPLE NO. 1 CLASSIFICATION SYMBOL ML INSTRUMENT NO. 22779

CALIBRATION EQUATION y = 1.187x + 0.08 DATE

CALIBRATION PERFORMED BY DATE

CALIBRATION CHECKED BY DATE

SAMPLE NO.	NOMINAL SPECIMEN SIZE (g)	DIAL GAUGE READING ON CCRD (3) TRIAL NUMBER		AVERAGE READING	CORRECTED READING	OVENDRIED MOISTURE CONTENT (%)
(1)	(2)*	1	2	(4)	(5)**	
EM-1 8	26	8.8	8.4	8.6	8.6	10.3
10	26	9.3	9.0	9.2	9.2	11.0
12	26	10.6	10.2	10.4	10.4	12.4
14	26	11.8	11.4	11.6	11.6	13.8
16	26	13.5	13.2	13.4	13.4	16.0
18	26	14.4	14.2	14.3	14.3	17.1
20	26	15.2	15.6	15.4	15.4	18.4
22	26	17.3	17.0	17.2	17.2	20.5
24	26	18.9	18.7	18.8	18.8	22.4
26	13 (half size)	10.3	10.5	10.4	20.8	24.8
28	13 (half size)	11.3	11.4	11.4	22.8	27.1

*If the moisture content of the full specimen exceeds the limit of the CCRD, a half-size specimen is used.

**If (2) = half-size specimen, (5) = (4) X 2.
If (2) = full-size specimen, (5) = (4)

AUXILIARY TESTS: USBR 5205-89
USBR 5300-89
USBR 5310-89

Figure 1. - Calcium carbide reaction device (CCRD) calibation — example.

13.2 Split each specimen into two parts by quartering or by using a sample splitter.

13.3 Determine the moisture content of one part in accordance with USBR 5300 (ovendrying) and record.

13.4 Determine the moisture content of the other part in accordance with USBR 5310 (CCRD method) and record.

13.4.1 Split the other part into two (two trials will be tested for each moisture content) 6-, 26-, or 142-gram test specimens as appropriate for the device being calibrated.

13.4.1.1 Record the nominal specimen size (mass) on figure 1.

13.4.1.2 Place the soil specimen in the CCRD cap.

13.4.1.3 Place the appropriate quantity (dependent on size of CCRD used) of reagent and the two 1-1/4-inch steel balls in the chamber of the CCRD. The pressure chamber should be in a horizontal position when the steel balls are placed so they will not drop onto and damage the pressure gauge orifice.

13.4.1.4 With the pressure vessel in a horizontal position, insert the cap into the pressure vessel and tighten the clamp to seal the cap to the unit.

13.4.1.5 Raise the CCRD to a vertical position so the soil in the cap drops into the pressure vessel.

13.4.1.6 Holding the CCRD horizontally, manually rotate the device for 10 seconds so the steel balls are put into motion around the inside circumference of the chamber. Rest for 20 seconds. The steel balls help to mix soil particles with reagent to maximize their reaction. Do not allow the steel balls to fall against either the cap or the orifice leading to the pressure gauge, since this might damage the pressure gauge.

13.4.1.7 After 3 minutes of the rotate-rest intervals, read the CCRD pressure gauge and record on figure 1. The pressure gauge should be read at eye level in a horizontal position. Determine and record the moisture content of the soil on a dry-mass basis from the calibration equation.

13.4.1.7.1 If the moisture content of the soil exceeds the limit of the CCRD, use a one-half-size (3-, 13-, or 71-gram) test specimen and double the CCRD reading.

13.4.1.7.2 When determining the mass of a one-half-size specimen, a manufacturer supplied brass mass (one-half the standard mass) is hooked through the link holding the scale pan cradle or is hung on the edge of the scale pan and the mass of the specimen is determined in the normal manner.

13.4.1.8 Release the pressure away from the operator's face or body and in a downwind direction. Unclamp and remove the cap and clean the device.

13.4.1.8.1 The pressure vessel should be inverted and lightly tapped with the hand or shaken to expel the soil and reagent mixture.

13.4.1.8.2 The interior of the cap should be wiped clean with a clean brush or towel to remove any residual material.

13.4.2 Repeat subparagraphs 13.4.1 through 13.4.1.8 for the second trial.

13.5 Calculate and record the average pressure gauge reading for trials 1 and 2.

13.5.1 If a one-half-size test specimen is used, double the average pressure gauge reading and record in the appropriate (corrected reading) column.

13.6 Repeat subparagraphs 13.2 through 13.5 for each moisture content specimen.

13.7 Plot data points in a manner similar to figure 2.

13.8 Draw a straight line or smooth curve through the points.

NOTE 2.–A linear regression or curve-fit type mathematical analysis using computers or portable calculators can be used if desired. Contact the Geotechnical Services Branch at the Bureau's Denver Office for further instruction.

14. Calculations or Interpretation of Results (See note 2.)

15. Report

15.1 The report is to consist of the following completed and checked form and table:

"Calcium Carbide Reaction Device (CCRD) Calibration" form (fig. 1).

"Ovendried Moisture Content Versus CCRD Gauge Reading" plot (similar to fig. 2).

15.2 All calculations are to show a checkmark and all plotting must be checked.

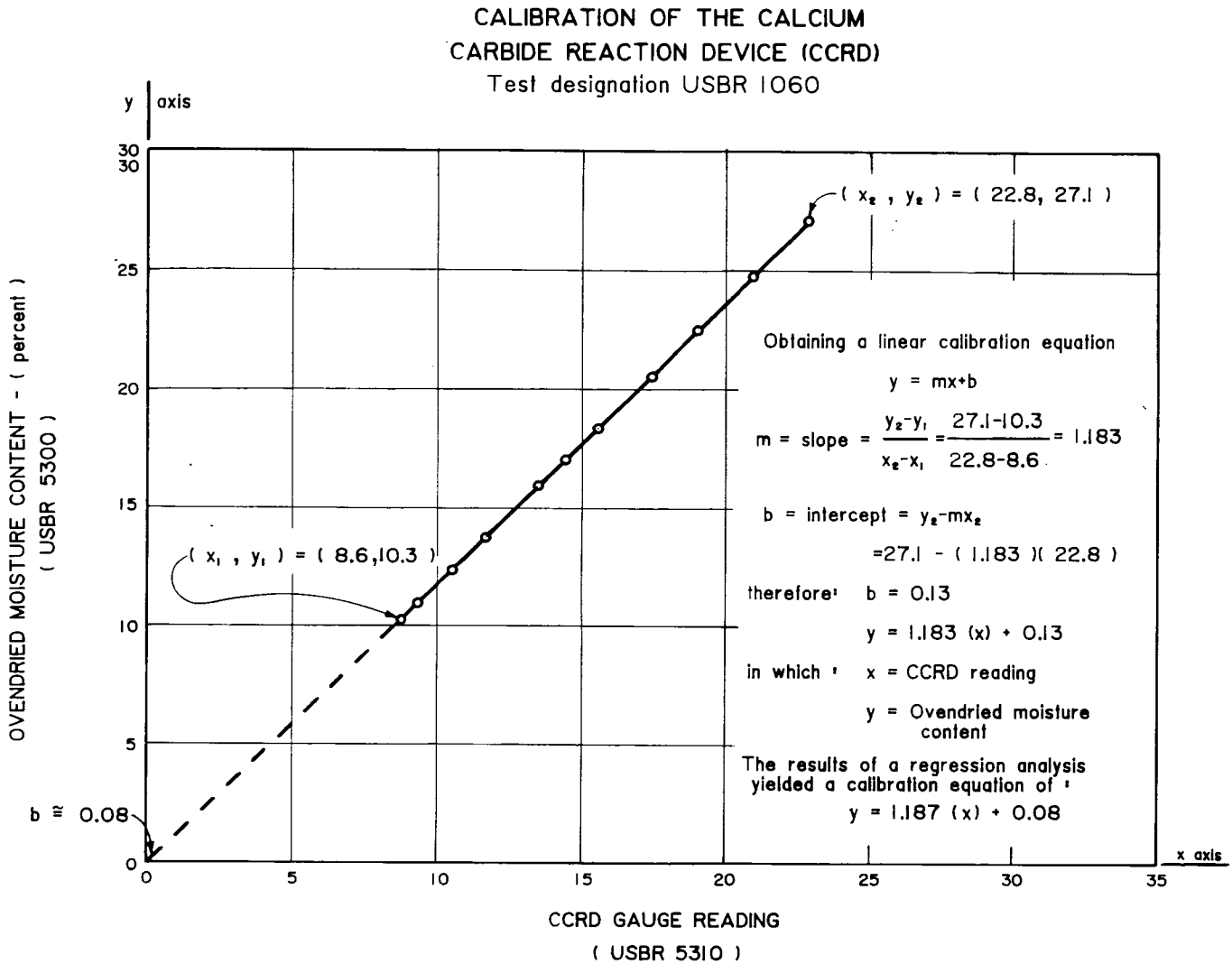

Figure 2. – Ovendried moisture content versus CCRD gauge reading — example.

UNITED STATES DEPARTMENT OF THE INTERIOR
BUREAU OF RECLAMATION

USBR 1405-89.

PROCEDURE FOR

CALIBRATING HYDROMETERS

INTRODUCTION

This procedure is under the jurisdiction of the Geotechnical Services Branch, code D-3760, Research and Laboratory Services Division, Denver Office, Denver, Colorado. The procedure is issued under the fixed designation USBR 1405. The number immediately following the designation indicates the year of acceptance or the year of last revision.

1. Scope

1.1 This designation outlines the procedure for calibrating the hydrometer used for gradation analysis of soils as performed in accordance with USBR 5330.

1.2 This calibration procedure is used to determine the hydrometer correction to compensate for the temperature of the water and the type of dispersing agent used.

2. Applicable Documents

2.1 *USBR Procedures*:

USBR 1012 Calibrating Balances or Scales
USBR 3900 Standard Definitions of Terms and Symbols Relating to Soil Mechanics
USBR 5330 Performing Gradation Analysis of Fines and Sand Size Fraction of Soils, Including Hydrometer Analysis

2.2 *ASTM Standards*:

E 1 ASTM Thermometers
E 100 Specification for ASTM Hydrometers

3. Summary of Method

3.1 A hydrometer cylinder is filled with either distilled water or a sodium hexametaphosphate solution of given concentration and is placed in a water bath. A hydrometer is placed into the cylinder and sufficient time is allowed for the hydrometer, hydrometer cylinder, cylinder fluid, and water bath to reach a temperature equilibrium. Hydrometer readings are taken at temperatures spanning the range of expected test temperatures, and corrections for intermediate temperatures are calculated.

4. Significance and Use

4.1 Soil hydrometers are used in gradation analysis of soils to determine the distribution of particles smaller than the U.S.A. Standard series No. 200 (75-μm) sieve. The ASTM soil hydrometers used by the Bureau are marked to read in grams of soil in suspension per liter of mixture of soil and distilled water at 20 °C. Since the temperature of the water used in the test may not be exactly 20 °C and because either distilled water or a solution of distilled water and dispersing agent is used, it is necessary to prepare hydrometer correction charts to compensate for the effects of temperature variation and dispersing agent. The hydrometer corrections are subtracted from the hydrometer readings obtained during the gradation analysis test to give a corrected hydrometer reading.

4.2 The hydrometer correction values obtained from this procedure are unique to the individual hydrometer, dispersing agent, percent solution of the agent, and temperature range in which the calibration procedure is performed. If any one of these is changed, new individual hydrometer correction values must be obtained.

4.3 This calibration procedure is to be performed upon receipt of the hydrometer as an acceptance check.

4.4 The hydrometer zero reading (see subpar. 10.2) must be checked upon receipt of the hydrometer and annually thereafter or anytime hydrometer readings are suspect.

5. Terminology

5.1 Definitions are in accordance with USBR 3900. Terms of particular significance are:

5.1.1 *Dispersing Agent.*–An agent used to assist in separating individual fine soil particles and to prevent them from flocculating when in suspension.

5.1.2 *Gradation Analysis.*–The process of determining gradation (ASTM definition).

6. Apparatus

6.1 *Soil Hydrometer.*–An ASTM soil hydrometer, graduated to read in grams per liter of suspension and conforming to the requirements for hydrometer 152H in ASTM E 100.

6.2 *Hydrometer Cylinder.*–A glass cylinder essentially 18 inches in height and 2-1/2 inches in diameter (457 by 64 mm) and marked for a volume of 1000 mL. The inside diameter is to be such that the 1000-mL mark is 14±1 inch (355±25 mm) from the bottom on the inside.

6.3 *Stirring Apparatus* (malt mixer).–A mechanically operated stirring device in which a suitably mounted electric motor turns a vertical shaft at a speed of not less than 10,000 revolutions per minute without load. The shaft should be equipped with a replaceable stirring paddle made of metal, plastic, or hard rubber. The shaft is to be of such a length that the stirring paddle will operate not less than 1-1/2 inches (38 mm) above the bottom of the

dispersion cup. A special dispersion cup conforming to either of the designs shown on figure 1 should be provided.

6.4 *Thermometer.*–0 to 50 °C, 0.5 °C divisions, conforming to the requirements of ASTM E 1.

6.5 *Balance or Scale.*–A typical balance or scale used for this designation must be readable to 0.1 g and have a capacity of about 500 g.

6.6 *Rubber Stopper.*–An appropriate size rubber stopper to adequately seal the hydrometer cylinder.

6.7 *Water Bath.*–An automatic temperature-controlled water tank or an insulated container large enough to hold the hydrometer cylinder is required. It is important that the water bath, hydrometer, and the hydrometer cylinder and its contents be maintained at a constant temperature for each hydrometer reading.

6.8 *Sodium Hexametaphosphate.*–A chemical agent in powder, crystal, or granular form, used as a dispersing agent.

6.9 *Graduated Cylinder.*–1000 mL capacity, graduated to 10 mL.

6.10 *Graduated Cylinder.*–250 mL capacity, graduated to 2 mL or other suitable container or method to measure 125 mL of the dispersing agent solution.

7. Reagents and Materials

7.1 Distilled water is to be used for obtaining hydrometer corrections for gradation analysis that will be performed using distilled water as the fluid medium.

7.2 A sodium hexametaphosphate and distilled water solution is to be used for obtaining hydrometer corrections for gradation analysis that will be performed using sodium hexametaphosphate as a dispersing agent.

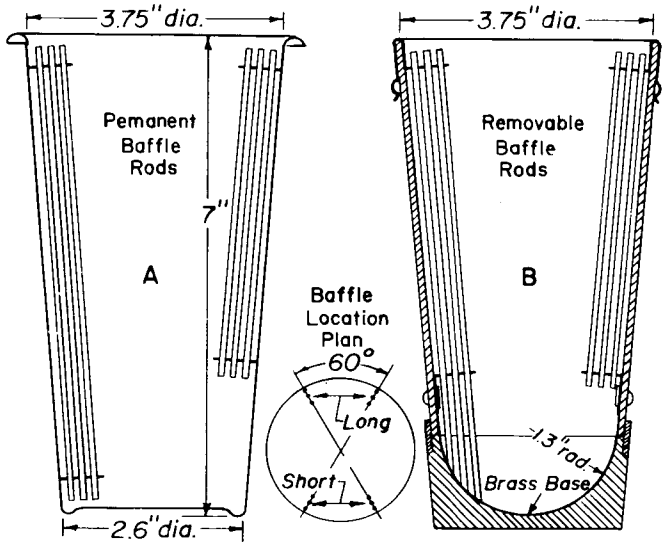

Metric Equivalents			
in.	1.3	2.6	3.75
mm	33	66	95.2

Figure 1. – Dispersion cup designs [ASTM D 422].

7.3 In general, a 4-percent solution of sodium hexametaphosphate is used in performing the calibration procedure stated in subparagraph 7.2 (see subpar. 7.4 for preparing 8 and 12 percent solutions). To prepare a 4-percent solution, the following procedure is to be followed:

7.3.1 Fill a 1000-mL graduated cylinder with distilled water to approximately 750 mL.

7.3.2 Obtain 40 grams of reagent grade or better sodium hexametaphosphate and place it into the dispersion cup. Add approximately 100 mL of distilled water to the sodium hexametaphosphate. Mix the sodium hexametaphosphate and water using the malt mixer until the sodium hexametaphosphate is dissolved. To dissolve the sodium hexametaphosphate into solution typically requires approximately 5 minutes of mixing in the malt mixer.

7.3.3 Add the solution from the dispersion cup to the graduated cylinder. Fill the graduated cylinder to the 1000-mL line with distilled water. Take the rubber stopper and securely place it on top of the graduated cylinder. With one hand over the top of the graduated cylinder and the other on the bottom, shake the graduated cylinder to thoroughly mix the solution.

7.4 In some circumstances, an 8- or 12-percent solution may be desired as a dispersing agent. The following amounts of sodium hexametaphosphate are to be used for the desired percent solution of sodium hexametaphosphate:

Solution desired, %	*Sodium hexametaphosphate required, g*
4	40
8	80
12	120

7.5 If an 8- or 12-percent solution is desired, the procedure outlined in subparagraph 7.3 is to be used along with the appropriate amount of sodium hexametaphosphate as given in subparagraph 7.4.

7.6 A prepared sodium hexametaphosphate dispersing solution may be stored for no more than 21 days if the storage temperature remains near room temperature (73 °F), and for no more than 7 days if the temperature of the storage area consistently exceeds 73 °F.

7.7 All containers of the dispersing solution must have the date of preparation and percent solution marked on them.

8. Precautions

8.1 *Technical Precautions:*

8.1.1 Sufficient time should be allowed for the hydrometer and liquids to reach a temperature equilibrium. Usually 30 minutes are required for the hydrometer to reach equilibrium after the liquids have attained the desired temperature.

8.1.2 Because sodium hexametaphosphate in powder, granular, or crystalline form absorbs moisture, the material must be stored in airtight containers.

9. Preparation of Apparatus

9.1 The hydrometer is to be cleaned, especially the reading portion of the stem, by washing the hydrometer

with soapy water and then rinsing it with alcohol and again in clean water.

10. Calibration and Standardization

10.1 Verify that the balance or scale used is currently calibrated in accordance with USBR 1012. If the calibration is not current, perform the calibration before using the balance or scale for this procedure.

10.2 *Hydrometer Zero Reading Check.*–The zero reading must be checked upon receipt of the hydrometer and annually thereafter or anytime hydrometer readings are suspect.

10.2.1 Fill a clean hydrometer cylinder to the calibration mark with 1 liter of distilled water.

10.2.2 Prepare a water bath at 20 °C and place the hydrometer cylinder and distilled water in the bath. Stir the water in the cylinder occasionally and allow sufficient time for the temperature of the water in the cylinder to come to equilibrium with the bath temperature.

10.2.3 Wash the hydrometer to be calibrated with soap and distilled water and clean the neck with alcohol. Rinse the hydrometer in distilled water and dry it with a clean towel.

10.2.4 Place the hydrometer in the cylinder and allow adequate time for the temperature of the hydrometer and water to stabilize.

10.2.5 Take the reading of the hydrometer at the top of the meniscus (see note 1) to the nearest 0.5 unit and record as shown on figure 2. This reading should be between +0.5 and –1.5. Insert the thermometer so that the tip is about 8 inches (200 mm) into the hydrometer cylinder, and check that the water temperature has remained at 20 °C. The thermometer should be read to the nearest 0.5 °C.

NOTE 1.–Hydrometers are graduated by the manufacturer to be read at the bottom of the meniscus formed by the liquid on the stem. Since it is not possible to secure readings of soil suspensions at the bottom of the meniscus, readings must be taken at the top. By calibrating the hydrometer, using the top of the meniscus, this correction is automatically accounted.

10.2.6 If the hydrometer reading does not fall within the required range, the hydrometer is to be rejected for laboratory use.

11. Conditioning

11.1 Perform this calibration procedure in an area where there will not be a large temperature fluctuation while performing the procedure.

12. Procedure

12.1 All data are to be recorded on the "Hydrometer Calibration for Gradation Analysis" form as shown on figure 2.

12.2 Locate and record the hydrometer number.

12.3 Record the type of and percent solution of dispersing agent to be used for the calibration procedure. This will either be distilled water or a solution of sodium hexametaphosphate, as described in subparagraph 7.3 or 7.4.

12.4 The hydrometer is calibrated by taking hydrometer readings at four different temperatures covering the range of expected test temperatures.

12.5 Adjust the temperature of the water bath to the lowest calibration temperature desired.

12.6 Place 125 mL of dispersing agent solution into the hydrometer cylinder.

12.7 Fill the hydrometer cylinder to 1000 mL with distilled water.

12.8 Apply a rubber stopper and securely place it on top of the hydrometer cylinder. With one hand over the top of the hydrometer cylinder and the other on the hydrometer cylinder bottom, shake the hydrometer cylinder until the dispersing agent and distilled water are thoroughly mixed.

12.9 Place the hydrometer cylinder into the water bath.

12.10 Dry the hydrometer, if necessary; carefully place the hydrometer into the hydrometer cylinder and wait at least 30 minutes to allow the temperature of the hydrometer, hydrometer cylinder, and liquids to equalize.

12.11 Record the temperature of the liquid in the hydrometer cylinder to the nearest 0.5 °C.

12.12 Determine and record the water level at the top of the meniscus on the hydrometer to the nearest 0.5 unit. If the water level is above the zero mark on the hydrometer, then the hydrometer correction is recorded as a negative value of that reading. If the water level is below the zero marking on the hydrometer, then the hydrometer correction is recorded as a positive value of that reading (see fig. 3).

12.13 Verify the hydrometer reading by removing the hydrometer, drying it, and replacing the hydrometer into the hydrometer cylinder. If the hydrometer readings are not the same, remove the hydrometer and repeat subparagraphs 12.10 through 12.12 until a reading can be verified.

12.14 Remove the hydrometer and elevate the temperature of the water bath to the next desired calibration temperature. Allow the temperatures of the water bath, the hydrometer cylinder, and the dispersing agent solution to equalize.

12.15 Repeat subparagraphs 12.10 through 12.14 until hydrometer readings at four different temperatures covering the range of expected test temperatures have been obtained and verified.

12.16 Determine the calibration equation.

12.16.1 Plot the temperature versus hydrometer reading data pairs on a graph similar to that shown on figure 4.

12.16.2 Draw a best-fit straight line through the plotted points (or perform a linear regression analysis and construct the resulting best-fit straight line on the graph).

12.16.3 Compare the data points to the straight line for acceptability.

12.16.3.1 All data points should plot within ±0.5 hydrometer unit of the straight line (or the correlation coefficient for the linear regression should be equal to or greater than ±0.95).

7-2309 (12-86)
Bureau of Reclamation

HYDROMETER CALIBRATION FOR GRADATION ANALYSIS

Designation USBR 1405-89

HYDROMETER NO. 189	ZERO READING 0.5
DISPERSING AGENT Sodium Hexametaphosphate	PERCENT SOLUTION 4%
CALIBRATION PERFORMED BY DATE	CHECKED BY DATE

CALIBRATION DATA

TEMPERATURE °C	HYDROMETER READING
18.0	6.5
21.0	5.5
25.0	4.0
28.0	3.0

DETERMINATION OF CALIBRATION EQUATION

SELECTED POINTS

TEMPERATURE °C	HYDROMETER READING
(1) 18.0	(3) 6.5
(2) 28.0	(4) 3.0

HYDROMETER CALIBRATION EQUATION

$y = mx + b$

(2) - (1) = 10.0 (A)

(4) - (3) = −3.5 (B)

$m = \frac{(B)}{(A)} = -0.35$

$b = y - mx$ $\quad b = (3) - (m)(1) = 12.8$

CALIBRATION EQUATION $y = -0.35(x) + 12.8$

GPO 852 - 933

Figure 2. - Hydrometer calibration for gradation analysis — example.

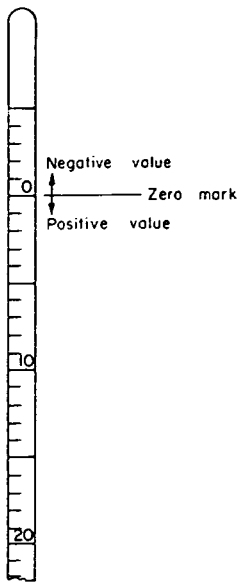

Figure 3. – Soil hydrometer stem sketch.

12.16.3.2 If the criteria in subparagraph 12.16.3.1 are not met, discard the data point that appears to be farthest from the straight line and repeat subparagraphs 12.16.1 through 12.16.3. If the criteria still cannot be met, the calibration procedure must be repeated until the criteria have been satisfied.

12.16.4 Determine and record the equation of the calibration line.

12.17 Use the calibration equation to obtain a table of temperature-hydrometer corrections as shown in table 1.

13. Calculations

13.1 Determine the linear equation of the hydrometer calibration line and calculate the hydrometer corrections for the temperature range calibrated.

13.2 Select the two data pairs closest to the straight line and calculate the equation of the straight line. The equation of the calibration line is determined in the form:

$$y = mx + b$$

where:

y = hydrometer correction
m = slope of line
x = temperature, °C
b = hydrometer correction intercept

13.3 The "Hydrometer Calibration for Gradation Analysis" form illustrates an example calculation of the slope of the calibration line, m, and the intercept, b.

13.4 Calculate hydrometer corrections using the calibration equation in subparagraph 13.2 and substituting the appropriate temperatures. The temperature range is generally between 18 and 28 °C, using 0.5 °C increments. These hydrometer corrections are to be rounded to the nearest 0.5 unit as shown in table 1 for the example calibration equation.

13.5 Calculation of the hydrometer corrections shown in table 1 is performed as follows:

$y = -0.35\ x + 12.8$ (Calibration equation, fig. 2)

substitute 18 °C into the calibration equation:

$$y = -0.35\ (18.0) + 12.8$$
$$y = 6.5$$

Therefore, the hydrometer correction, y, (for the temperature of 18 °C) is recorded in the table as 6.5. This substitution procedure is continued for the entire temperature range calibrated.

14. Report

14.1 The report is to consist of the following completed and checked form, plot, and table:
"Hydrometer Calibration for Gradation Analysis" form (fig. 2).
Plot of calibration equation (fig. 4).
Table of hydrometer corrections (table 1).

14.2 All calculations are to show a checkmark and all plotting must be checked.

Table 1. – Hydrometer corrections.

Hydrometer number *189*
Dispersing agent *Sodium hexametaphosphate*
Percent solution *4%*
Calibration date
Computed by
Checked by

Temperature, °C	Hydrometer correction
18.0	6.5
18.5	6.5
19.0	6.0
19.5	6.0
20.0	6.0
20.5	5.5
21.0	5.5
21.5	5.5
22.0	5.0
22.5	5.0
23.0	5.0
23.5	4.5
24.0	4.5
24.5	4.0
25.0	4.0
25.5	4.0
26.0	3.5
26.5	3.5
27.0	3.5
27.5	3.0
28.0	3.0

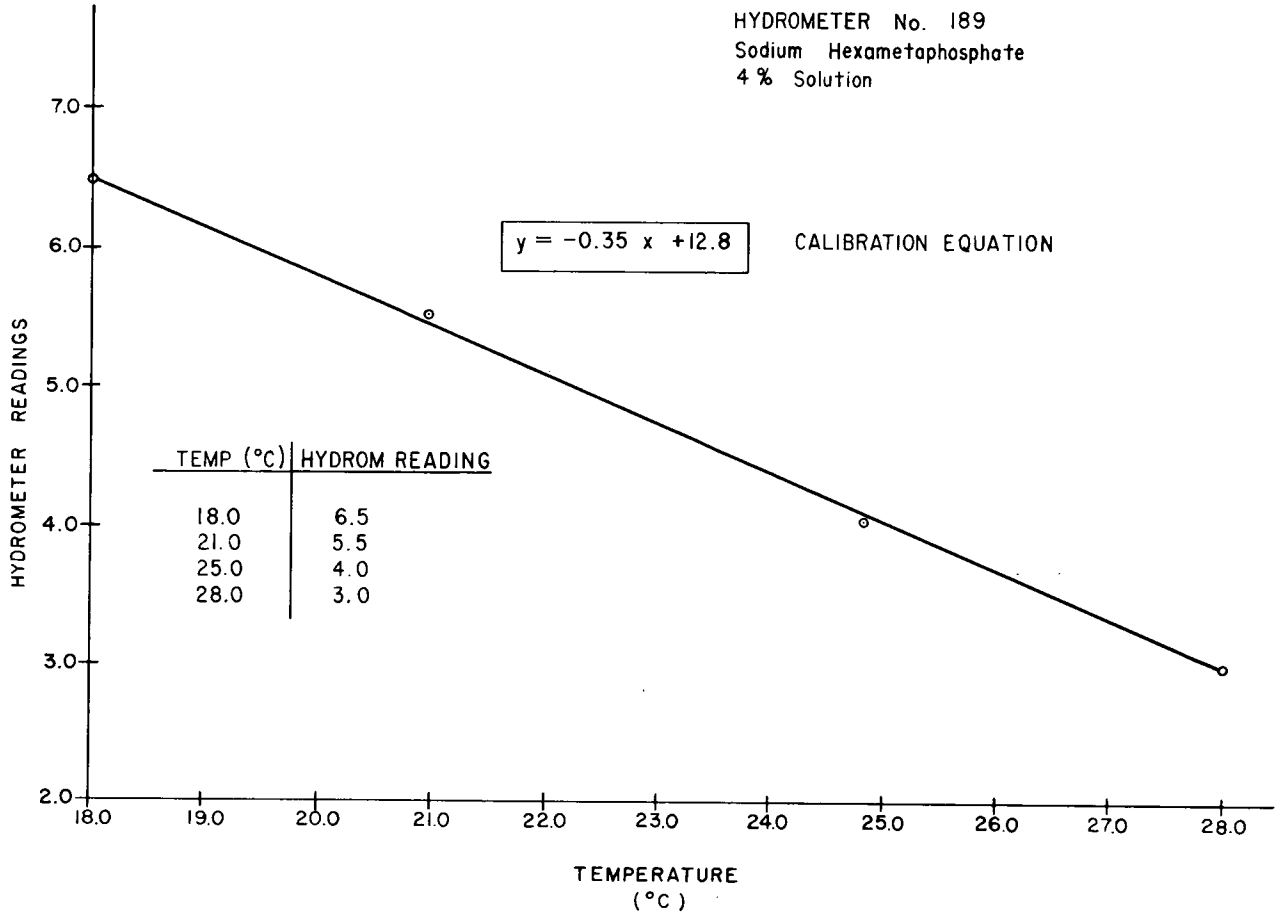

Figure 4. – Hydrometer calibration equation.

UNITED STATES DEPARTMENT OF THE INTERIOR
BUREAU OF RECLAMATION

USBR 1410-89

PROCEDURE FOR

CALIBRATING THE SOIL PENETROMETER

INTRODUCTION

This procedure is under the jurisdiction of the Geotechnical Services Branch, code D-3760, Research and Laboratory Services Division, Denver Office, Denver, Colorado. The procedure is issued under the fixed designation USBR 1410. The number immediately following the designation indicates the year of acceptance or the year of last revision.

1. Scope

1.1 This designation outlines the procedure for calibrating the soil penetrometer and associated set of needles used in the penetration resistance test as performed in accordance with USBR 5505.

1.2 This calibration procedure is used to determine acceptability of the soil penetrometer and/or needles.

2. Applicable Documents

2.1 *USBR Procedures*:

USBR 1000 Standards for Linear Measurement Devices
USBR 1012 Calibrating Balances or Scales
USBR 5505 Determining Moisture Content–Penetration Resistance Relationships of Fine-Grained Soils

2.2 *ASTM Standard*:

D 1558 Standard Test Method for Moisture Content Penetration Resistance Relationships of Fine-Grained Soil

3. Summary of Method

3.1 The force required to compress a spring dynamometer (fig. 1) is measured using a platform balance or scale. The measured value is compared to the average resultant reading on the stem of the penetrometer.

3.2 The end diameter of a penetrometer needle is measured with a vernier or micrometer caliper. The average measured values are compared to the nominal values given in table 1.

3.3 The decision to accept or reject the penetrometer or any of the needles is based on results of calibration.

Table 1. – Sizes for interchangeable penetrometer needles.

Needle No.	Nominal area in²	End diameter in	Minimum allowable end diameter, in
1	1	1.128	1.100
2	1/2	0.798	0.778
4	1/4	.564	.550
10	1/10	.357	.348
20	1/20	.252	.246
40	1/40	.178	.174

4. Significance and Use

4.1 A soil penetrometer and associated needles must be calibrated properly to ensure reliable test results when used to obtain penetration resistance values for a given moisture-unit weight relationship.

4.2 This calibration procedure is to be performed upon receipt of the soil penetrometer and/or needles and annually thereafter.

5. Apparatus

5.1 *Balance or Scale.*–A typical balance or scale used for this designation must be readable to 0.01 lbm and have a capacity of about 150 lbm or readable to 0.1 lbm and have a capacity of about 250 lbm.

5.2 *Soil Penetrometer.*–A soil penetrometer (fig. 1) consists of a spring dynamometer with a force-indicating scale on the stem of the handle. The force scale must be graduated to 90 lbf (2-lbf divisions) with a line encircling the stem at each 10-lbf interval. A sliding ring on the stem indicates the maximum force obtained in the test.

5.3 *Penetrometer Needle Set.*–Each penetrometer needle (fig. 1 and table 1) must consist of a shank with a head of known end area. The set of interchangeable needles must include the sizes given in table 1. The needle shank should have graduations inscribed at intervals of 1 inch to indicate the depth of penetration and have a minimum length of 4 inches, excluding the threaded portion. Needles should not be used when they have been worn so as to reduce the flat-end area by 5 percent.

5.4 *Vernier or Dial Caliper, or Outside Micrometer.*–Caliper or micrometer capable of measuring to 1.200 inch (31.00 mm) and graduated to 0.001 inch (0.02 mm).

6. Precautions

6.1 *Technical Precautions*:

6.1.1 Keep the penetrometer and needles coated with lightweight oil when not in use to prevent rusting. Wipe off excess oil when the penetrometer and/or needles are to be used.

6.1.2 Store the penetrometer and needles in a suitable box or case to prevent damage.

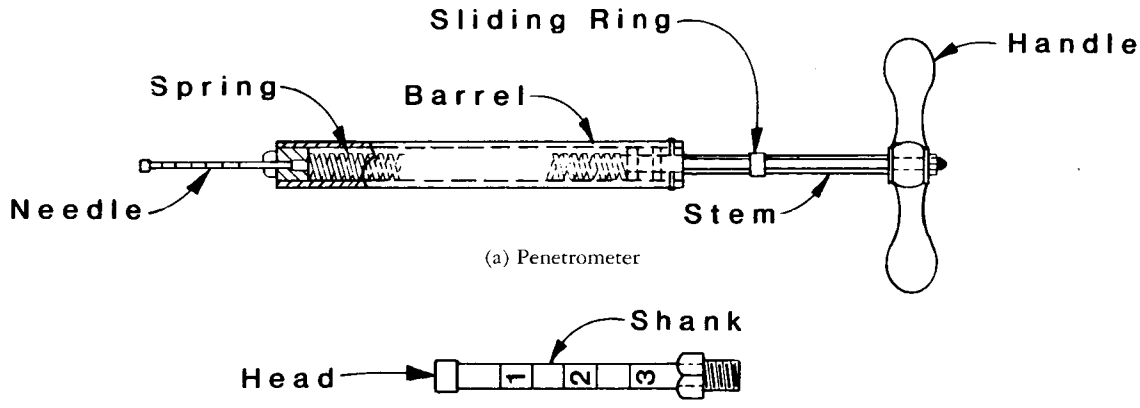

(a) Penetrometer

(b) Penetrometer needle

Figure 1. - Soil penetrometer.

7. Calibration and Standardization

7.1 Verify that equipment is currently calibrated in accordance with the applicable calibration procedure. If the calibration is not current, perform the calibration before using the equipment for this procedure.
USBR 1000 Standards for Linear Measurement Devices
USBR 1012 Calibrating Balances or Scales

8. Conditioning

8.1 Place the soil penetrometer and needles in the environment in which they are to be calibrated for at least 24 hours prior to the time of calibration.

9. Procedure

9.1 *Penetrometer Calibration*:

9.1.1 All data are to be recorded on the "Soil Penetrometer and Needle Calibration" form as shown on figure 2.

9.1.2 Attach the No. 2 needle to the penetrometer. Ensure that the sliding ring is at its zero position.

9.1.3 Place the end of the needle on the scale, with the penetrometer in an upright position, perpendicular to the pan of the scale, so the mass of the penetrometer is bearing on the scale.

9.1.4 Zero the scale.

9.1.5 The following forces are those used to calibrate the penetrometer: 25-, 50-, and 75-lbf.

NOTE 1.–The calibration forces given in subparagraph 9.1.5 are approximate values that are included as a guide to ensure calibration of the soil penetrometer throughout its full useful operating range.

9.1.6 Start with the smallest force and successively proceed to the next higher.

9.1.7 Push down on the penetrometer at a steady rate of approximately 25 lbf per second until the scale registers approximately the desired force.

9.1.8 Gradually release the force to zero.

9.1.9 Record to the nearest 1 lbf the force applied to the scale.

9.1.10 Read the penetrometer by looking through the hole in the sliding ring located on the penetrometer stem. Record the value to 1 lbf as shown on figure 2. Push the sliding ring back to its zero position.

9.1.11 Repeat subparagraphs 9.1.7 through 9.1.10 two additional times for a total of three sets of readings.

9.1.12 Calculate and record the average of the three scale readings and the three penetrometer readings.

9.1.13 Repeat subparagraphs 9.1.7 through 9.1.12 using about 50 and 75 lbf to calibrate the soil penetrometer throughout its operating range.

9.1.14 Determine the percent deviation for each average set of readings.

9.1.15 Allowable deviation is ±5 percent. Mark the data form as to whether the penetrometer is accepted or rejected.

9.2 *Calibration of the Penetrometer Needles*:

9.2.1 Using either a caliper or micrometer, take three measurements of head diameter evenly spaced around the head of each needle and as close to the end of the needle as possible.

9.2.2 Read and record each diameter measurement to the nearest 0.001 inch (0.02 mm) as shown on figure 2.

9.2.3 Determine the average diameter of the head.

9.2.4 Minimum allowable end diameter values are as shown in table 1. Mark the data form as to whether the penetrometer needle is accepted or rejected.

9.2.5 Repeat subparagraph 9.2 for every penetrometer needle in the set.

10. Calculations

10.1 Percent deviation =

$$\left(\frac{\text{average penetrometer reading} - \text{average scale reading}}{\text{average scale reading}}\right) \times 100$$

11. Report

11.1 The report is to consist of a completed and checked "Soil Penetrometer and Needle Calibration" form (fig. 2).

11.2 All calculations are to show a checkmark.

7-2337 (11-86) Bureau of Reclamation	SOIL PENETROMETER AND NEEDLE CALIBRATION	Designation USBR 1410 - 89
MANUFACTURER Example	PENETROMETER SERIAL NO. 1	SCALE NO. 1
CALIBRATION PERFORMED BY DATE	COMPUTED BY DATE	CHECKED BY DATE

PENETROMETER CALIBRATION

TRIAL NO.	25 lbf		50 lbf		75 lbf	
	SCALE – lbf	PENETROMETER	SCALE – lbf	PENETROMETER	SCALE – lbf	PENETROMETER
1	25	24	49	48	76	77
2	24	23	50	49	76	78
3	26	25	49	47	77	79
AVERAGE	25	24	49	48	76	78
(%) DEVIATION	-4		-2		3	

PENETROMETER NEEDLE CALIBRATION

NEEDLE NO.	MEASURED DIAMETER in			AVERAGE MEASURED DIAMETER in	MINIMUM ALLOWABLE END DIAMETER in		
	TRIAL NO. 1	TRIAL NO. 2	TRIAL NO. 3			ACCEPT	REJECT
1	1.127	1.126	1.127	1.127	1.100	X	
2	0.796	0.795	0.794	0.795	0.778	X	
4	0.560	0.558	0.562	0.560	0.550	X	
10	0.352	0.356	0.354	0.354	0.348	X	
20	0.246	0.240	0.244	0.243	0.246		X
40	0.176	0.177	0.177	0.177	0.174	X	

REMARKS: _____

Figure 2. – Soil penetrometer and needle calibration — example.

UNITED STATES DEPARTMENT OF THE INTERIOR
BUREAU OF RECLAMATION

USBR 1415-89

PROCEDURE FOR

CALIBRATING LABORATORY MECHANICAL COMPACTORS

INTRODUCTION

This procedure is under the jurisdiction of the Geotechnical Services Branch, code D-3760, Research and Laboratory Services Division, Denver Office, Denver, Colorado. The procedure is issued under the fixed designation USBR 1415. The number immediately following the designation indicates the year of acceptance or the year of last revision.

1. Scope

1.1 This designation outlines the procedure for calibrating laboratory mechanical compactors. This procedure is used for adjusting the rammer impact developed by laboratory mechanical soil compactors to conform to that developed by the free fall of manual compaction rammers in standard impact-type soil compaction tests.

1.2 This procedure involves changing the rammer mass and/or the height of fall of the rammer to compensate for mechanical variations including friction in accordance with the deformation of small lead cylinders which are struck by manual and mechanical rammers.

2. Applicable Documents

2.1 *USBR Procedures*:
USBR 1007 Calibrating Dial Indicators
USBR 5500 Performing Laboratory Compaction of Soils — 5.5-lbm Rammer and 18-in Drop
USBR 7240 Performing Rapid Method of Construction Control

3. Summary of Method

3.1 Lead cylinders are deformed using both the manual and mechanical compactors. Average deformation values are calculated for each device and compared.

3.2 If necessary, mass is added to or removed from the rammer of the laboratory mechanical compactor, or other adjustments are made to the laboratory mechanical compactor until average deformation values from the laboratory mechanical compactor approximately match those from the manual compactor.

4. Significance and Use

4.1 Laboratory mechanical compactors can be used for the standard compaction procedure USBR 5500. To ensure a reliable standard compactive effort, the laboratory mechanical compactor must be calibrated.

4.2 The mechanical compactor shall be calibrated and adjusted as necessary, before initial use; near the end of each period during which the mold was filled 250 times; before reuse after anything, including repairs, which may affect the test results significantly; and whenever the test results are questionable.

5. Apparatus

5.1 *Lead Deformation Apparatus.*–The apparatus consists of an anvil, guide collar, and striking pin (figs. 1a through 1e).

5.2 *Dial Comparator.*–The dial comparator consists of a dial indicator graduated to 0.001 inch (0.02 mm), and stand (fig. 1f).

5.3 *Height-of-Drop Guide.*–Refer to figure 1g.

5.4 *Hand Rammer.*–The rammer fits into the height-of-drop guide, has a mass of 5.5 lbm ±1 percent, and is capable of freely dropping 18 inches inside the guide.

5.5 *Pedestal Sleeve.*–A pedestal sleeve used with the hand rammer and height-of-drop guide (fig. 1h).

5.6 *Other Equipment.*–All equipment required for USBR 5500 procedure.

5.7 *Lead Cylinders.*–A supply of small lead cylinders described as 38-caliber, 158-grain lead alloy cores which are manufactured for swaging into bullets. These cylinders are available at sporting goods stores and should be purchased in lots of 1000. Burrs of irregularities on the ends of the lead cylinders should be removed by sanding with fine emery cloth.

6. Precautions

6.1 *Safety Precautions*:

6.1.1 Keep hands and clothing away from the laboratory mechanical compactor during operation.

6.1.2 Safety shoes and safety glasses should be worn while performing the calibration.

6.2 *Technical Precautions.*–Operators who are unfamiliar with or who infrequently use hand tamping devices must practice to develop the proper technique (note 3).

7. Calibration and Standardization

7.1 Check the dial comparator used to measure deformation of the lead cylinders to ensure current calibration

in accordance with USBR 1007. If the calibration is not current, perform the calibration before using the dial comparator for this procedure.

8. Conditioning

8.1 Perform this calibration in an area isolated from drafts and/or extreme temperature fluctuations.

9. Procedure

9.1 All data are to be recorded on the "Laboratory Mechanical Compactor Calibration" form as shown on figure 2.

9.2 *Manual Method*:

9.2.1 Select at least 10 lead cylinders from the same lot or shipment. Remove any burrs from the ends of the cylinders using fine emery cloth or sandpaper.

9.2.2 Assemble the lead deformation apparatus with the lead cylinder as shown on figure 1e. Ensure that the striking pin slides freely inside the guide collar.

NOTE 1.–It is recommended that a light coat of oil be applied to the outside of the striking pin.

9.2.2.1 Carefully place the lead cylinder so that it is in the center of the small recess in the anvil base. Make sure it will remain in that position when moving the lead deformation apparatus.

NOTE 2.–A slight variation of the lead cylinder from center may result in erroneous deformation values.

9.2.3 Place the assembled lead deformation apparatus on the base of the dial comparator with the tip of the dial stem on the top center of the ball bearing to give a maximum dial reading as shown on figure 1d.

9.2.4 Read the dial and record the value as the initial reading as shown on figure 2. All dial comparator readings are to be made and recorded to 0.001 inch (0.02 mm).

9.2.5 Check the mass of the manual rammer. The mass is required to be within 1 percent of the specified mass. For the manual compaction rammer, as prescribed in USBR 5500, a rammer mass of 5.5 lbm is specified, permitting a variation of ±0.05 lbm.

9.2.6 Place the baseplate of the compaction mold on the compaction cylinder foundation, and place the assembled lead deformation apparatus (fig. 1e) on the baseplate.

9.2.7 Place the pedestal sleeve and height of drop guide with the rammer over the lead deformation apparatus (as shown on fig. 1g) without allowing the rammer to touch the striking pin.

9.2.8 Raise the rammer to the specified height of drop and release to apply one blow to the top of the striking pin.

NOTE 3.–It is advisable to perform several practice deformation trials before recording the information for record. The intent is to develop a technique for the individual operator which will ensure that a solid square blow is delivered to the striking pin. The drop guide and rammer should be held in a plumb position centered over the striking pin; each blow is identified as being either a solid blow or a glancing blow—if the rammer fell freely or if it slid against the guide sleeve.

9.2.9 Return the lead deformation apparatus to the dial comparator, read the dial and record as *Reading after drop* as shown on figure 2.

9.2.10 Examine the lead cylinder to determine that a solid blow was delivered. If the lead cylinder was not deformed uniformly, a solid blow was not delivered. Do not use the results; instead, repeat the procedure with a new lead cylinder.

NOTE 4.–Indications of the performance of an acceptable test are (a) that the lead cylinder barrel is shaped uniformly, and (b) that the lead cylinder barrel was in the center of the anvil, not off centered as evidenced by a slight ring at the bottom of the lead cylinder.

9.2.11 Determine and record the deformation of the lead cylinder (see subpar. 10.1).

9.2.12 Repeat subparagraphs 9.2.2 through 9.2.11 using a new lead cylinder for each test until five values are obtained.

9.2.13 Determine the average deformation of the initial five values obtained in subparagraph 9.2.12.

9.2.14 Determine and record for each of the five tests the percent deviation from the average deformation value (see subpar. 10.3). Reject deformation values that vary more than 2 percent from the average.

9.2.15 Repeat subparagraphs 9.2.2 through 9.2.14 until five acceptable deformation values are obtained.

9.2.16 Record the average of the five acceptable values.

9.3 *Mechanical Method*:

9.3.1 Select at least 10 cylinders from the same lot or shipment. Remove any burrs from the ends of the cylinders using fine emery cloth or sandpaper.

9.3.2 Assemble and adjust the laboratory mechanical compactor in accordance with the manufacturer's instructions.

9.3.3 Operate the laboratory mechanical compactor for one cycle of 25 blows and observe to ensure that the compactor is operating satisfactorily. If not, perform necessary cleaning or adjustments. The rammer should fall on soil or other soft material.

9.3.4 Check the height-of-drop of the rammer. Operate the laboratory mechanical compactor and mark the extremes of travel of the rammer using an appropriate marking pencil on the support column of the compactor.

9.3.5 Measure the distance between the markings. It is to be within 1 percent of the specified height, usually 18 inches (457 mm).

9.3.6 Adjust the height-of-drop, if necessary, in accordance with the manufacturer's instructions.

9.3.7 Assemble the lead cylinder deformation apparatus as described in subparagraph 9.2.2.

9.3.8 Read the initial dial comparator value as described in subparagraph 9.2.3 through 9.2.4.

9.3.9 Place the lead deformation apparatus on the compaction mold baseplate which is on the base of the laboratory mechanical compactor.

9.3.10 Position the assembly and place the rammer lightly on the striking pin in such a manner that, for the next blow, the rammer will be centered on the striking pin.

9.3.10.1 Many laboratory mechanical compactors are designed to distribute blows over the cross-sectional area of the specimen, which can be accomplished by the rammer offset rotating its shaft during the "pickup" part of the cycle. For this type of compactor, the magnitude of the revolution of the rammer between blows must be determined and the lead deformation apparatus positioned so that the rammer blow will be centered on the striking pin. For another type of compactor, the rammer moves in a vertical direction only and the baseplate is rotated. In this case, the rotating mechanism of the baseplate should be disconnected during the calibration operation and positioned so that the rammer blow will be centered on the striking pin.

9.3.11 Start the machine and allow the rammer to apply one blow on top of the striking pin.

9.3.12 Obtain the final dial reading as described in subparagraph 9.2.9.

9.3.13 Examine the lead cylinder to determine that a solid blow was delivered. If the lead cylinder was not deformed uniformly, a solid blow was not delivered. Do not use the results; instead, repeat the process with a new lead cylinder.

9.3.14 Determine and record the deformation of the lead cylinder (see subpar. 10.1).

9.3.15 Repeat subparagraphs 9.3.7 through 9.3.14 using a new lead cylinder for each test until five values are obtained.

9.3.16 Determine the average deformation of the initial five values obtained in subparagraph 9.3.15.

9.3.17 Determine and record, for each of the five tests, the percent deviation from the average deformation (see subpar. 10.3). Reject deformation values that vary more than 2 percent from the average.

9.3.18 Repeat subparagraphs 9.3.7 through 9.3.17 until five acceptable deformation values are obtained.

9.3.19 Record the average of the five acceptable values.

9.3.20 Determine and record the deviation of the mechanical method average from the manual method average in percent (see subpar. 10.4).

9.3.21 If the deviation is less than or equal to 2 percent, the laboratory mechanical compactor is acceptable. If the deviation is greater than 2 percent, adjust the laboratory mechanical compactor and recalibrate.

9.4 *Laboratory Mechanical Compactor Adjustment*:

9.4.1 If any adjustments are made to the laboratory mechanical compactor, clearly document all changes and include with the calibration form.

9.4.2 If the deformation produced by the manual rammer is greater than that produced by the laboratory mechanical compactor, add mass to the rammer on the laboratory mechanical compactor in an amount necessary to produce the same average deformation value as produced by the manual method. This added mass is to be fastened securely to the rammer.

9.4.3 If the deformation produced by the manual rammer is smaller than that produced by the laboratory mechanical compactor, remove mass from the rammer on the laboratory mechanical compactor in an amount necessary to produce the same deformation value as produced by the manual method.

NOTE 5.–This assumes that some mass has been added to the rammer as received from the manufacturer. Normally, mass will have to be added to the original rammer. If the calibration indicates that the mass of the original rammer needs to be reduced to less than 5.5 lbm, carefully recheck all equipment and calibrations and repeat the procedure. If removal of mass is still indicated, the height-of-drop should be adjusted instead as described in subparagraph 9.4.5.

9.4.4 The total mass added to the original 5.5-lbm rammer as received from the manufacturer must not exceed 1.1 lbm. If more than 1.1 lbm added mass is required, the mechanical compactor is to be rebuilt or repaired.

9.4.5 The type of laboratory mechanical compactor, where the rammer moves in a vertical direction only, may operate with less friction resistance during the drop part of the cycle than that of the manual compactor. This may result in a larger average deformation value for this laboratory mechanical compactor than for the manual compactor, even though the rammer of both devices are exactly 5.5 lbm and are dropped from identical heights of 18 inches. For this type of laboratory mechanical compactor, there is no provision for the removal of small increments of mass. In this case, it is permissible to make minor adjustments in the height of drop, as necessary, to obtain deformation values equal to that of the manual compactor. Follow the manufacturer's instructions when making this adjustment.

9.4.6 If the laboratory mechanical compactor was adjusted, perform the calibration procedure again to make sure the correct mass was added or removed from the rammer.

10. Calculations

10.1 Determine deformation of the lead cylinders.

$$\text{Deformation} = \text{initial reading} - \text{reading after drop} \quad (1)$$

10.2 Determine average deformation of five trials.

$$\text{Average deformation} = \frac{V_1 + V_2 + V_3 + V_4 + V_5}{5} \quad (2)$$

where V_1, V_2, V_3, V_4, and V_5 are 5 deformation values

10.3 Determine percent deviation from average.

$$\text{Deviation from average, \%} = 100\left(\frac{\text{deformation–average deformation}}{\text{average deformation}}\right) \quad (3)$$

NOTE 6.–Percent deviation values calculated in this paragraph may be positive or negative.

10.4 Determine deviation of the mechanical method in percent.

$$\text{Deviation, } \% = 100 \left(\frac{M - H}{H} \right) \quad (4)$$

where:

M = average deformation mechanical method
H = average deformation manual method

11. Report

11.1 The report is to consist of a completed and checked "Laboratory Mechanical Compactor Calibration" form (fig. 2).

11.2 Any adjustments made to the laboratory mechanical compactor are to be included as documentation and filed with the calibration form.

11.3 All calculations are to show a checkmark.

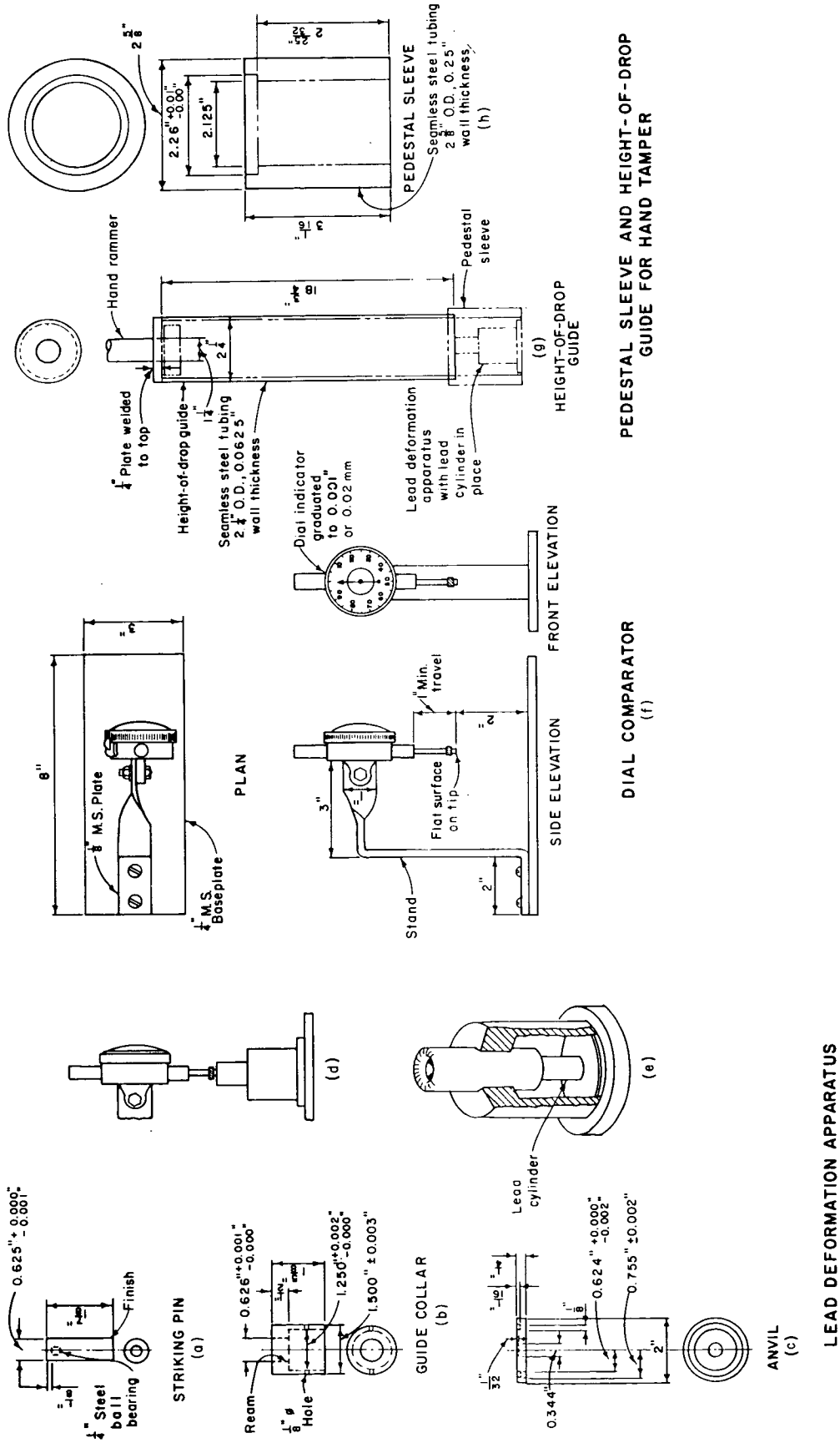

Figure 1. – Apparatus for calibrating mechanical laboratory soil compactor. 101-D-366

7-2342 (12-86) Bureau of Reclamation	LABORATORY MECHANICAL COMPACTOR CALIBRATION	Designation USBR 1415- 89

MANUFACTURER Example SERIAL NO. _____ MECHANICAL COMPACTOR NO. _____

DIAL COMPARATOR NO. _____ CALIBRATION PERFORMED BY _____ DATE _____

CALIBRATION CHECKED BY _____ DATE _____

MANUAL METHOD

TEST NUMBER	NO. 1	NO. 2	NO. 3	NO. 4	NO. 5
INITIAL READING	0.585	0.583	0.586	0.590	0.588
READING AFTER DROP	0.345	0.349	0.351	0.357	0.351
DEFORMATION	0.231	0.234	0.235	0.233	0.237
% DEVIATION FROM AVERAGE	−1.28	0	0.427	−0.427	1.28
TEST NUMBER	NO. 6	NO. 7	NO. 8	NO. 9	NO. 10
INITIAL READING					
READING AFTER DROP					
DEFORMATION					
% DEVIATION FROM AVERAGE					
AVERAGE 0.234					

MECHANICAL METHOD

TEST NUMBER	NO. 1	NO. 2	NO. 3	NO. 4	NO. 5
INITIAL READING	0.583	0.588	0.584	0.585	0.584
READING AFTER DROP	0.350	0.350	0.348	0.352	0.349
DEFORMATION	0.233	0.238	0.236	0.233	0.235
% DEVIATION FROM AVERAGE	−0.851	1.27	0.426	−0.851	0
TEST NUMBER	NO. 6	NO. 7	NO. 8	NO. 9	NO. 10
INITIAL READING					
READING AFTER DROP					
DEFORMATION					
% DEVIATION FROM AVERAGE					
AVERAGE 0.235					

MANUAL METHOD AVERAGE 0.234 MECHANICAL METHOD AVERAGE 0.235

DEVIATION OF MECHANICAL METHOD FROM MANUAL METHOD (%) 0.427

REMARKS _____

GPO 853-019

Figure 2. – Laboratory mechanical compactor calibration — example.

UNITED STATES DEPARTMENT OF THE INTERIOR
BUREAU OF RECLAMATION

USBR 1420-89

PROCEDURE FOR

CALIBRATING HEAD TANKS

INTRODUCTION

This procedure is under the jurisdiction of the Geotechnical Services Branch, code D-3760, Research and Laboratory Services Division, Denver Office, Denver, Colorado. The procedure is issued under the fixed designation USBR 1420. The number immediately following the designation indicates the year of acceptance or the year of last revision.

1. Scope

1.1 This designation outlines the procedure for calibrating head tanks used in performing permeability tests in accordance with USBR 5600 or 5605.

1.2 This calibration procedure is used to determine a calibration factor for a head tank.

2. Applicable Documents

2.1 *USBR Procedures*:

USBR 5600 Determining Permeability and Settlement of Soils [(8-in (203-mm) Diameter Cylinder)]

USBR 5605 Determining Permeability and Settlement of Soils Containing Gravel

3. Summary of Method

3.1 A calibration factor must be determined for individual head tanks used for permeability testing. Water is slowly drained from a head tank into a container. The calibration factor is determined by dividing the volume of water collected (in cubic centimeters) by the length (in inches) for the portion of the head tank calibrated.

4. Significance and Use

4.1 A calibration factor must be determined for individual head tanks in order to calculate the coefficient of permeability of soils from permeability test data.

4.2 The calibration factor obtained from this procedure is unique to a given head tank and to the air intake tube used in the head tank. If the air intake tube is replaced, this calibration procedure must be repeated.

4.3 An incorrect head tank calibration factor will lead to an erroneous value of the coefficient of permeability.

4.4 This calibration procedure is to be performed upon receipt of the head tank or in the event of any change in the air intake tube associated with the head tank.

5. Apparatus

5.1 *Balance or Scale.*–The mass of water collected can range from 200 to 12 000 g depending on the head tank size being calibrated. Typical balances or scales used for this designation are:

Approximate capacity	*Readable to*
500 g	0.1 g
1000 g	0.1 g
4000 g	1 g
20 kg	1 g

5.2 *Head Tank* (with air intake tube, fig. 1).–Appropriate size head tank, with air intake tube used for permeability testing.

5.3 *Tubing.*–Plastic tubing, 3 feet of 1/8 inch i.d., with offshoot bleed line.

5.4 *Rubber Stopper.*–Appropriate size rubber stopper to adequately seal head tank with one hole approximately 1/8 inch to hold air intake tube.

5.5 *Container.*–A suitable container to hold water as appropriate for calibrating a head tank of given diameter.

5.6 *Hose Clamp.*–2 rubber hose clamps, 3/8-inch shutoff.

6. Reagents and Materials

6.1 Tapwater that is free of acids, alkalies, or oils and is suitable for drinking should be used for calibrating the head tank.

7. Precautions

7.1 *Technical Precautions.*–The head tank and connecting hoses should be cleaned regularly to remove impurities that may clog lines and restrict free water flow.

8. Preparation of Apparatus

8.1 Clean the head tank and connecting tubing by flushing the system with clean water.

8.2 Check the tubing for leakage and/or restrictions, and replace or clean, if necessary.

8.3 Clear the air intake tube to ensure unrestricted flow.

8.4 Locate the head tank number. If the head tank has no number, assign the tank a number and permanently display it on the head tank.

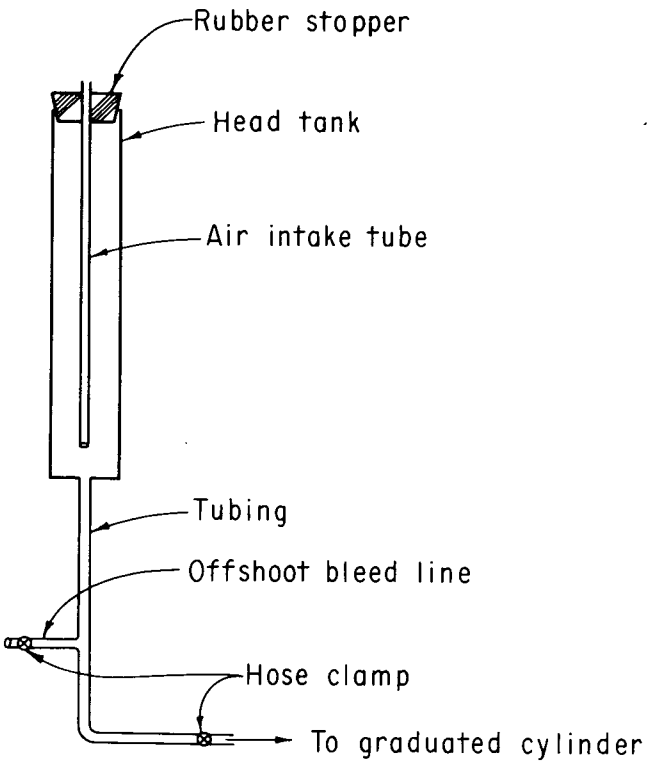

Figure 1. – Head tank calibration schematic.

9. Calibration and Standardization

9.1 Not applicable, reference standards are not used for this procedure.

10. Conditioning

10.1 Not applicable, special conditioning requirements are not needed for this procedure.

11. Procedure

11.1 All data are to be recorded on the "Head Tank Calibration" form as shown on figure 2.

11.2 Locate and record the head tank number.

11.3 Securely connect the plastic tubing to the bottom of the head tank.

11.4 Place one hose clamp around the offshoot bleed line and close the clamp to prevent any water flow.

11.5 Place the second hose clamp around the tubing near its end and close the clamp to prevent any water flow.

11.6 Fill the head tank with water.

11.7 Secure the air intake tube into the rubber stopper and place the rubber stopper into the top of the head tank. Press down firmly on the rubber stopper to ensure a proper seal with the head tank.

11.8 Open the hose clamp that is connected to the bleed offshoot line until all the entrapped air is removed from the lines.

11.9 Close the hose clamp to prevent further water flow.

11.10 Slightly open the hose clamp that is connected near the end of the tubing to drain the head tank until air just begins entering the head tank through the bottom of the air intake tube.

11.11 Close the hose clamp to prevent further water flow after air bubbles are seen coming from the bottom of the air intake tube.

11.12 Determine the water level at the top portion of the head tank to the nearest 0.1 inch and record as the *Initial head tank level*. This initial water level should be in the range from 0 to 2 inches from the top of the graduated markings on the tank. If it is not, add additional water to the head tank if necessary, and repeat subparagraphs 11.10 and 11.11 until the water level falls in the stated range.

11.13 Determine the volume of water in a selected length of the head tank as follows:

11.13.1 Select an appropriate container and a balance or scale for use as indicated in the following table:

Head tank diameter, mm	*Volume in cm³ (mass in g)*	*Balance or scale, grams*	
		Capacity	*Readable to*
20	200	500	0.1
30	500	1000	0.1
40	900	1000	0.1
50	1500	4000	1
60	2000 (about ½ gal)	4000	1
6 inches	12 000 (about 3 gal)	20 kg	1 g

11.13.1.1 If desired, the volume of water drained from the head tank may be measured for the smaller diameter head tanks by using a graduated cylinder or similar measuring device.

11.13.2 Determine and record all measurements of mass to the smallest division readable on the balance or scale as indicated in subparagraph 11.13.1.

11.13.3 Determine and record the mass of the container.

11.13.4 Open the hose clamp that is connected near the bottom of the tubing to drain the water slowly from the head tank into the container.

11.13.5 Drain the water in the head tank until about 1 inch of the air intake tube is still submerged and close the hose clamp.

11.13.6 Determine and record the mass of the container and water.

11.13.7 Calculate and record the mass of water. Consider this mass to be the volume of water collected by assuming 1 cm³ of water equals 1 g of water.

11.14 Determine the water level at the bottom portion of the head tank to the nearest 0.1 inch and record as the *Final head tank level* on the test form.

11.15 Calculate and record to the nearest 0.1 inch the length of head tank calibrated.

11.16 Calculate the head tank calibration factor and record as follows:

Head tank diameter	*Record to nearest*
20, 30 mm	0.1 cm^3/in
40, 50, 60 mm	1 cm^3/in
6 inches	10 cm^3/in

11.17 Repeat the steps in subparagraphs 11.6 through 11.16 two more times for a total of three trials.

11.18 Compare the head tank calibration factors for the three trials. The difference between the lowest value and the highest value must not exceed the following:

Head tank diameter	*Maximum difference*
20, 30 mm	0.2 cm^3/in
40, 50, 60 mm	2 cm^3/in
6 inches	10 cm^3/in

If the calibration results do not meet the requirement, repeat the calibration procedure until the criteria are met.

11.19 Calculate and record the average head tank calibration factor.

12. Calculations

12.1 Calculate the length of head tank calibrated L.

L = final head tank level, in – initial head tank level, in (1)

12.2 Calculate the total volume (mass) of water collected in cm^3 (g) as follows:

$$V = (1) - (2) \quad (2)$$

where:

V = total volume of water collected, cm^3 (g)
(1) = mass of container and water, g
(2) = mass of container, g

12.3 Calculate the calibration factor for each trial.

$$F = \frac{V}{L} \quad (3)$$

where:

F = head tank calibration factor, cm^3/in
V = total volume of water collected, cm^3
L = length of head tank calibrated, in

13. Report

13.1 The report is to consist of a completed and checked "Head Tank Calibration" form (fig. 2).

13.2 All calculations are to show a checkmark.

7-2308 (12-86) Bureau of Reclamation	HEAD TANK CALIBRATION	Designation USBR 1420-89

Head Tank No. 611 Head Tank Diameter 60mm

Calibration performed by _____ Date _____

Calculations checked by _____ Date _____

		Trial No.		
		1	2	3
Initial Head Tank Level	(in)	1.3	1.2	1.3
Final Head Tank Level	(in)	31.9	31.6	31.8
Length of Head Tank Calibrated	(in)	30.6	30.4	30.5
Mass of Container + Water	(g)	2785	2770	2780
Mass of Container	(g)	930	930	930
Total Volume (mass) of Water Collected	(g)	1855	1840	1850
Head Tank Calibration Factor	(cm^3/in)	61	61	61

Average Head Tank Calibration Factor 61 (cm^3/in)

Criteria for Acceptability of Results:

Maximum Difference Between Lowest and Highest Head Tank Calibration Factor Obtained

Head Tank Diameter	Maximum Difference
20, 30 mm	0.2 cm^3/in
40, 50, 60 mm	2 cm^3/in
6 inches	10 cm^3/in

Figure 2. – Head tank calibration — example.

UNITED STATES DEPARTMENT OF THE INTERIOR
BUREAU OF RECLAMATION

USBR 1425-89

PROCEDURE FOR

CALIBRATING PERMEABILITY TEST EQUIPMENT

INTRODUCTION

This procedure is under the jurisdiction of the Geotechnical Services Branch, code D-3760, Research and Laboratory Services Division, Denver Office, Denver, Colorado. This procedure is issued under the fixed designation USBR 1425. The number immediately following the designation indicates the year of acceptance or the year of last revision.

1. Scope

1.1 This designation outlines the procedure for calibrating permeability equipment used in the laboratory permeability test as performed in accordance with USBR 5600 or 5605.

2. Auxiliary Tests

2.1 The head tank must be calibrated in accordance with USBR 1420 prior to performing this calibration procedure.

3. Applicable Documents

3.1 *USBR Procedures*:
USBR 1420 Calibrating Head Tanks
USBR 3900 Standard Definitions of Terms and Symbols Relating to Soil Mechanics
USBR 5600 Determining Permeability and Settlement of Soils [8-in (203-mm) Diameter Cylinder]
USBR 5605 Determining Permeability and Settlement of Soils Containing Gravel

4. Summary of Method

4.1 A limiting or maximum coefficient of permeability for equipment used in a permeability test is determined by draining water from a constant head tank through porous inserts separated by a calibration ring. Time required for the water to flow through the system is recorded and the limiting or maximum coefficient of permeability of the equipment is calculated.

5. Significance and Use

5.1 The maximum permeability of laboratory permeability equipment must be determined to assess the accuracy and reliability of results obtained from laboratory tests on soil which incorporate their use.

5.2 The purpose of this procedure is to determine maximum permeability of the testing equipment. To accomplish this, a calibration ring is used which represents a test specimen with infinite permeability.

5.3 The maximum permeability of the equipment can be changed by replacing any part of the apparatus; i.e., tubing, valves, head tank, etc. In order to obtain reliable and reproducible results, calibration of the permeability system should be repeated if any item is replaced. Additionally, the complete permeability apparatus should be recalibrated after 10 permeability tests have been performed or once every 2 years, whichever occurs first.

5.4 With continued use, permeability of the porous inserts may be reduced due to clogging. A reduction in permeability of the porous stones can lead to erroneous results in the coefficient of permeability calculated for soil specimens.

6. Terminology

6.1 Definitions are in accordance with USBR 3900.

7. Apparatus

7.1 An 8-inch-diameter permeability apparatus as described in USBR 5600 or 19-inch-diameter permeability apparatus with rubber liner in place as described in USBR 5605.

7.2 Head tank as described in USBR 1420.

7.3 Porous inserts of appropriate diameter and thickness for either of the permeability cylinders or pea gravel and screens.

7.4 A 3- or a 9-inch high metal calibration ring (fig. 1).

7.5 A stopwatch.

7.6 Scaled vernier or dial caliper graduated to read in thousandths of an inch (0.001 in). The measuring device should be capable of measurements up to 10 inches.

7.7 Scaled rule at least 8 feet long graduated to read in hundredths of a foot (0.01 ft).

8. Reagents and Materials

8.1 Tapwater that is free of acids, alkalies, or oils, and is suitable for drinking should be used for calibrating laboratory permeability equipment.

9. Precautions

9.1 *Technical Precautions*:

9.1.1 Air pockets should not be present in the tube connecting the head tank and permeability cylinder during the calibration procedure.

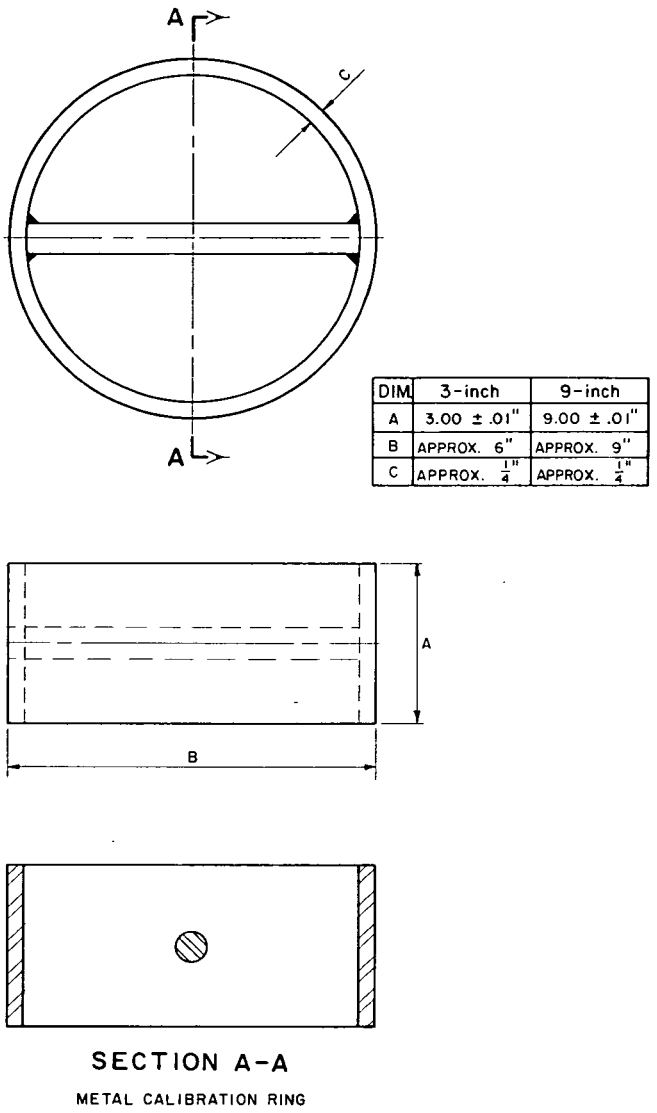

Figure 1. – Metal calibration ring.

9.1.2 Porous inserts, permeability cylinder, water tubing, and valves should remain as a single system for both the calibration and testing procedure to ensure uniformity of results. If any one of these items is changed or replaced, this calibration procedure must be repeated.

10. Preparation of Apparatus

10.1 Clean the permeability cylinder and porous inserts. Soak the porous inserts for a minimum of one-half hour before calibrating.

10.2 Clean the head tank and position it to allow flow at a low head.

10.3 Connect the tubing from the head tank to the permeability cylinder and check for leakage and air bubbles.

10.4 Bleed all air bubbles from the line, and eliminate any leaks in the system.

10.5 Calibration of the 19-inch diameter permeability apparatus is performed with a rubber liner glued to the inside walls of the cylinder as used in USBR 5605. The rubber liner should be inspected and replaced if it is excessively worn or cut.

11. Calibration and Standardization

11.1 Verify that equipment is currently calibrated in accordance with the applicable calibration procedure. If the calibration is not current, perform the calibration before using the equipment for this procedure.

12. Conditioning

12.1 Soak the porous inserts in water for a minimum of one-half hour before using them in the calibration procedure. If pea gravel and screens are used instead of porous inserts, the pea gravel should be in a saturated surface dry condition before being placed in the permeability cylinder.

13. Procedure

13.1 All data are to be recorded on the "Permeability — Settlement Test Data Sheet 1" as shown on figure 2. This form is used in USBR 5600 and 5605 and is modified for use in this procedure as shown.

13.2 Record the number and calibration factor of the head tank used (obtained from USBR 1420). Record the permeability cylinder number.

13.3 Using a caliper, determine the height of the calibration ring at three points equidistant around the circumference of the ring and record to the nearest 0.001 inch (use *Remarks* column on form). The 3-inch (75-mm) high calibration ring is used if the calibration is being performed on the 8-inch diameter standard permeability apparatus. The 9-inch (230-mm) high calibration ring is used if the calibration is being performed on the 19-inch diameter permeability apparatus.

13.4 Calculate the average height of the ring and record on the form in the column *Consolidated thickness* — (L′).

13.5 Place the bottom insert in the cylinder, and press down firmly to seat the insert.

13.5.1 If pea gravel and screen are used instead of porous inserts in the 19-inch diameter permeability apparatus, the gravel and screen should be placed in accordance with USBR 5605.

13.6 Place the calibration ring on top of the bottom insert.

13.7 Fill the head tank with water.

13.8 Release enough water from the head tank to completely fill the tubing and cover the bottom insert.

13.9 Fill the permeability cylinder with water from a bucket to just above the calibration ring.

13.10 Place the top porous insert on top of the calibration ring.

13.11 Place the load piston on the top porous insert.

13.12 Place the load spring or springs on the load piston.

13.13 Place the bottom load plate on the load spring or springs.

13.14 Install tension rods through the load plate and secure the rods to the permeability cylinder baseplate.

13.15 If collars and nuts are not already on the tension rods, place them on each rod. Tighten the nuts enough to hold the load spring or springs in place.

13.16 Fill the permeability cylinder with water from a bucket until water drains from the overflow pipe.

13.17 Position the head tank at a low head [about 3 to 5 inches (75 to 125 mm)]. Measure the head (using the 8-ft rule) to the nearest 0.01 ft and record in the column *Head* — (H_{wc}). The measurement is made following procedures described in USBR 5600 or 5605.

13.18 Select two locations on the head tank, one near the top of the tank and another near the bottom. Mark these locations with a grease pencil or other suitable marking device. Record these values to the nearest 0.1 inch in the *Head tank reading* column. Seal the top end of the head tank with the vented rubber stopper containing the air intake tube.

13.19 Begin releasing water from the head tank. Start the stopwatch when the water level in the head tank reaches the top mark. Stop the stopwatch when the water reaches the bottom mark on the head tank. Record the beginning and ending time in the *Hour* column.

13.20 Determine the elapsed stopwatch time in minutes and seconds and record in the Remarks column. Calculate and record the elapsed time t' in hours to the nearest 0.0001 hour.

13.21 Calculate the constant C and record to the nearest 0.001 unit.

13.22 Calculate the value CF and record to the nearest 0.1 unit.

13.23 Calculate and record the *Difference in reading*, R between the beginning and ending head tank readings to the nearest 0.1 inch.

13.24. Calculate and record the value of R/t' to the nearest 0.1 unit.

13.25 Calculate and record the coefficient of permeability k to the nearest 100 feet per year.

13.26 Repeat the procedure outlined in subparagraphs 13.18 through 13.25 twice for a total of three trials, and record values from each trial separately.

13.27 Calculate and record the average maximum coefficient of permeability of the equipment for the three trials.

14. Calculations

14.1 Calculate the constant C using one of the following equations:

14.1.1 For the 8-inch diameter cylinder:

$$C = 0.0738 \left(\frac{L'}{H_{wc}}\right) \quad (1)$$

where:

C = constant
0.0738 = conversion factor which incorporates: two constants to convert volume in cm^3 to ft^3, three constants to convert time in minutes to years, the constant pi (π), and the constant to convert the area of the tank in in^2 to ft^2 (see USBR 5600 for further explanation).
L' = height of calibration ring, in
H_{wc} = constant head = difference between headwater and tailwater level, ft

14.1.2 For the 19-inch diameter cylinder:

$$C = 0.013 \left(\frac{L'}{H_{wc}}\right) \quad (2)$$

where:

0.013 = conversion factor which incorporates: two constants to convert volume in cm^3 to ft^3, three constants to convert time in minutes to years, the constant pi (π), and the constant to convert the area of the tank in in^2 to ft^2 (see USBR 5605 for further explanation).

14.2 Calculate the constant CF

$$CF = C(F) \quad (3)$$

where (F) equals calibration factor of head tank from subparagraph 13.2 in cubic centimeters per inch.

14.3 Calculate the coefficient of permeability.

$$k = CF\left(\frac{R}{t'}\right) \quad (4)$$

where:

k = coefficient of permeability, ft/yr
R = difference in head tank markings, in
t' = elapsed time, h

15. Interpretation of Test Results

15.1 Results of the calibration procedure should be compared with previous calibrations. If there is large variation in results, the calibration procedure should be reviewed to determine the cause of the variation. Variation can be caused by dirty or plugged porous inserts, dirty tubing, or replacement of hardware of fittings. If any piece of equipment cannot be cleaned, it should be replaced. Once any piece of equipment is replaced, the calibration procedure should be repeated.

15.2 Following calibration of the permeability test equipment, results of permeability tests performed on soil specimens should be compared with the calibrated maximum permeability (maximum flow rate) of the equipment as some soils may have a permeability equal to or greater than the permeability value of the equipment.

16. Report

16.1 The report is to consist of a completed and checked "Permeability — Settlement Test Data Sheet 1" (fig. 2).

16.2 All calculations are to show a checkmark.

7-2378 (12-86)
Bureau of Reclamation

PERMEABILITY-SETTLEMENT TEST DATA SHEET 1

Designation USBR 1425-89

SAMPLE NO.	PROJECT	FEATURE
	Example	Example
TESTED BY / DATE	COMPUTED BY / DATE	CHECKED BY / DATE

CYLINDER NO. 15-8 inch diameter

TIME INSTALLED		HEAD TANK		HEAD-(H_{wc}) (SEE REMARKS COLUMN)	CONSOLIDATED THICKNESS - (L') (DATA SHEET NO. 2)	CONSTANT $C = 0.0738 \frac{L'}{H_{wc}}$ 1/ $C = 0.013 \frac{L'}{H_{wc}}$ 2/	CONSTANT CF
DATE 1986	HOUR	NO.	CALIBRATION FACTOR (F) (cm^3/in)	(ft)	(in)		
2-6	1:20	613	60.6	0.25	3.000	0.886	53.7

TIME OF OBSERVATION		ELAPSED TIME (t')	HEAD TANK READING	DIFFERENCE IN READING (R)	R/t'	COEF. OF PERM. ($k = CF \frac{R}{t'}$)	REMARKS (RECORD HEAD IN FEET, CHANGES IN HEAD, AND OTHER OBSERVATIONS)
1986	HOUR	(hr)	(in)	(in)	(in/hr)	(ft/yr)	
2-6	2:15	-----	0.0	----	----	-----	
	2:23	0.1431	30.0	30.0	209.6	11,300	t'=8 min. 35 sec.
	3:05	-----	0.0	----	----	-----	
	3:13	0.1467	30.0	30.0	204.5	11,000	t'=8 min. 48 sec.
	3:15	-----	0.0	----	----	-----	
	3:23	0.1450	30.0	30.0	206.9	11,100	t'=8 min. 42 sec.
							Average k=11,100 ft/yr
							Calibration ring height
							3.000
							2.999
							3.001
							Average = 3.000 inch

1/Constant for USBR 5600 (8-inch diameter permeability cylinder)
2/Constant for USBR 5605 (19-inch diameter permeability cylinder)

GPO 855-090

Figure 2. – Permeability — settlement test data sheet 1.

UNITED STATES DEPARTMENT OF THE INTERIOR
BUREAU OF RECLAMATION

USBR 1430-89

PROCEDURE FOR

CALIBRATING THE LOADING DEVICE FOR PERMEABILITY TESTS

INTRODUCTION

This procedure is under the jurisdiction of the Geotechnical Services Branch, code D-3760, Division Research and Laboratory Services Division, Denver Office, Denver, Colorado. The procedure is issued under the fixed designation USBR 1430. The number immediately following the designation indicates the year of acceptance or the year of last revision.

1. Scope

1.1 This designation outlines the procedure for calibrating the loading device used for permeability tests as performed in accordance with USBR 5600 or 5605.

1.2 This calibration procedure is used to determine the acceptability of the loading device.

2. Applicable Documents

2.1 *USBR Procedures*:

USBR *1104 Load Verification of Testing Machines
USBR 5600 Determining Permeability and Settlement of Soils [8-in (203-mm) Diameter Cylinder]
USBR 5605 Determining Permeability and Settlement of Soils Containing Gravel

3. Summary of Method

3.1 The loading device is placed in a testing machine and is loaded incrementally to the maximum capacity of the ram. The reading on the pressure gauge of the loading device is compared to the testing machine load reading at each loading increment.

3.2 The repeatability of the loading device at several loads is checked, and the loading device is adjusted or repaired as necessary.

3.3 A calibration plot defining the relationship between pressure gauge readings and testing machine load readings is used to determine which pressure gauge readings to use for a particular load when performing permeability tests in accordance with USBR 5600 or 5605.

4. Significance and Use

4.1 A calibrated loading device must be used in the laboratory to ensure that correct loads are placed on the permeability specimen when the specimen is tested in accordance with USBR 5600 or 5605.

4.2 This calibration procedure is to be performed upon receipt of the loading device and biennially thereafter.

5. Apparatus

5.1 *Testing Machine.*–Any type having sufficient load capacity. The testing machine should be equipped with two steel bearing blocks with hardened faces; the upper one of which is a spherically seated headblock and the lower of a plain rigid block. The faces of the bearing blocks when new should not depart from plane by more than 0.0005 inch (0.013 mm) at any point and should be maintained within 0.001 inch (0.02 mm). The bearing faces should be perpendicular to the axis of loading of each bearing block. The center of the bearing face of the spherically seated block should coincide with the center of the sphere. The moving portion of this block should be held closely in the spherical seat, but the design should be such that the bearing face can be rotated freely and tilted through small angles in any direction to prevent eccentric loading conditions.

5.2 *Loading Device.*–A hand-operated hydraulic pump loading device, fitted with a pressure gauge of sufficient capacity to safely load the ram to at least 75 to 80 percent of its load rating, including flexible hose with quick-connect couplings for attaching to rams.

5.3 *Steel Plate.*–A steel plate equivalent to the top plate of the permeability apparatus to be placed between the loading device and the upper bearing block of the testing machine.

6. Precautions

6.1 *Technical Precautions*:

6.1.1 Visually check the condition of the loading device each time it is used. Be sure that all hydraulic hoses and fittings are connected to the proper inlet and outlet connections of the pump cylinder.

6.1.2 During loading and when the maximum capacity of the ram has been reached, visually check the system for leaks and malfunctions which could affect test results.

6.1.3 Use a steel plate between the loading device and the upper bearing plate of the testing machine. Do not allow the saddle of the ram to come into contact with the upper bearing plate of the testing machine while it is being loaded because the apparatus may be damaged.

6.2 *Safety Precautions.*–Extreme care should be exercised when working with hydraulic hoses and loading devices. Safety devices, such as safety glasses and safety shoes, must be used while performing the calibration.

* *Concrete Manual*, Bureau of Reclamation, part 2, in press.

7-2343 (11-86) Bureau of Reclamation	LOADING DEVICE CALIBRATION FOR PERMEABILITY TESTS	Designation USBR 1430-89
CALIBRATION PERFORMED BY	DATE	CALIBRATION CHECKED BY / DATE

RAM CAPACITY 7 ton (14,000 lbf) RAM SERIAL NO. 726914

PUMP SERIAL NO. USBR 3130 GAUGE SERIAL NO. G56055

TESTING MACHINE: DATE OF LAST CALIBRATION 2/18/87

MANUFACTURER Example SERIAL NO. TM1000 MODEL NO. 1

PRESSURE GAUGE READING lbf/in^2	LOAD lbf			AVERAGE LOAD lbf
	TRIAL NO. 1	TRIAL NO. 2	TRIAL NO. 3	
0	0	0	0	0
1000	1821	1843	1821	1828
2000	3574	3597	3574	3582
3000	5418	5485	5463	5455
4000	7419	7419	7419	7419
5000	9217	9150	9217	9195
6000	10,926	10,881	10,926	10,911

REMARKS

Figure 1. – Loading device calibration for permeability tests — example.

7. Calibration and Standardization

7.1 Verify that the testing machine has been recently calibrated in accordance with USBR 1104. If the calibration is not current, perform the calibration before using the testing machine.

8. Conditioning

8.1 The room temperature should not vary more than ±5 °C during the calibration.

8.2 Place the loading device and other apparatus in the environment in which it is to be calibrated for at least 24 hours before performing the calibration procedure.

9. Procedure

9.1 All data are to be recorded on the "Loading Device Calibration for Permeability Tests" form as shown on figure 1.

9.2 Refer to the manufacturer's instructions for guidelines on operating the testing maching.

9.3 Assemble the ram, hydraulic line, pressure gauge, and pump. Ensure that all air is removed from the system. See manufacturer's instructions for the recommended method to remove air from the loading device.

9.4 Place the ram in the load frame of the testing machine. Be sure there is sufficient clearance between the upper and lower bearing plates of the testing machine.

9.5 Place the steel plate between the loading device and the upper bearing plate of the testing machine.

9.6 Pump the loading device until a pressure gauge reading equal to about 10 percent of the maximum capacity of the pressure gauge is reached. Read and record the pressure gauge reading as shown on figure 1.

9.7 Using the most sensitive range possible of the testing machine, read and record the corresponding load due to the pressure applied in subparagraph 9.6.

9.8 Repeat subparagraphs 9.6 and 9.7 increasing the pressure gauge reading in 10 percent increments. Continue increasing the pressure until a load equal to at least 75 to 80 percent of the load rating of the ram is reached.

9.9 Release the pressure in the pump (refer to the manufacturer's instructions).

9.10 Perform subparagraphs 9.6 through 9.9 a total of three times. The three load readings should not vary from each other by more than 1 percent of the maximum capacity of the ram; if they do, inspect the loading device for defects and adjust or repair as necessary. Repeat the procedure until the readings meet the criteria.

9.11 Compute the average of the three load readings for each pressure increment.

9.12 Prepare a plot of average load versus pressure gauge reading, and draw a best fit line from the origin through the data points as shown on figure 2.

10. Calculations

10.1 Determine the average of the three load readings.

$$A = \frac{R_1 + R_2 + R_3}{3}$$

where:

A = average load

R_1, R_2, R_3 = individual load readings

11. Report

11.1 The report is to consist of the following completed and checked form and plot:

"Loading Device Calibration for Permeability Tests" form (fig. 1).

A plot of the calibration results (fig. 2).

11.2 All calculations are to show a checkmark and all plotting must be checked.

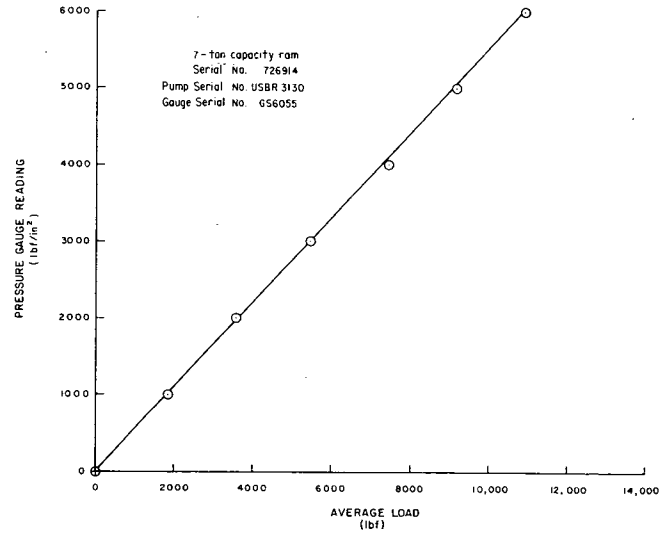

Figure 2. – Loading device — calibration plot example.

UNITED STATES DEPARTMENT OF THE INTERIOR
BUREAU OF RECLAMATION

USBR 1435-89

PROCEDURE FOR

CALIBRATING SAND-CONE EQUIPMENT AND SAND

INTRODUCTION

This procedure is under the jurisdiction of the Geotechnical Services Branch, code D-3760, Research and Laboratory Services Division, Denver Office, Denver, Colorado. The procedure is issued under the fixed designation USBR 1435. The number immediately following the designation indicates the year of acceptance or the year of last revision.

1. Scope

1.1 This designation outlines the procedure for calibrating sand-cone equipment and sand.

1.2 The calibration procedure is performed to obtain values for use in measuring the volume of a field unit weight test hole excavated in accordance with USBR 7205.

2. Applicable Documents

2.1 *USBR Procedures*:

USBR 1011 Calibrating Measures for Sand Calibration

USBR 7205 Determining Unit Weight of Soils In-Place by the Sand-Cone Method

2.2 *ASTM Standard*:

E 11 Specification for Wire-Cloth Sieves for Testing Purposes

3. Summary of Method

3.1 Sand flows from a specific sand-cone device into a template placed on a flat surface to determine the mass of sand retained in the cone portion of the device and the template during an actual test.

3.2 Using a specific sand-cone device and template, sand flows into a calibrated measure approximating the dimensions of a field test hole to determine the density of the sand.

4. Significance and Use

4.1 This calibration procedure is performed to obtain (a) the mass of sand in the cone and template, and (b) the density of the sand for use in measuring the volume of field unit weight test holes.

4.2 Each sand-cone device has unique characteristics which may cause the sand to flow through it differently. Final calibration values may be affected by changes in these flow characteristics. Calibration values, therefore, are not interchangeable, even for devices which may appear to be identical.

4.3 This procedure should be performed:

4.3.1 When a new supply of sand is processed into the storage bin.

4.3.2 When several unit weight tests are required, on a daily basis, the sand-cone device and sand should be calibrated weekly.

4.3.3 If tests are made at infrequent intervals, the sand-cone device and sand must be calibrated before a test or series of tests is begun.

4.3.4 If tests are routinely made using reclaimed sand, calibrate when the cumulative mass of the sand removed from the storage container equals the capacity of the container. A record of the mass of sand removed should be kept at a convenient location on or near the container.

5. Apparatus

5.1 *General Apparatus*:

5.1.1 *Sand-Cone Equipment.*–Equipment as required by USBR 7205.

5.1.2 *Sieves.*–U.S.A. Standard series Nos. 10, 40, and 200 (2.00 mm, 425 μm and 75 μm, respectively), or Nos. 8, 30, and 200 (2.36 mm, 600 μm, and 75 μm, respectively) sieves, conforming to the requirements of ASTM E 11.

5.1.3 *Balance or Scale.*–A typical balance or scale used for this designation must be readable to 0.01 lbm and have a capacity of about 100 lbm.

5.1.4 *Drying Oven.*–An oven, thermostatically controlled, preferably of the forced-draft type, and capable of maintaining a uniform temperature of 230±9 °F (110±5 °C) throughout the drying chamber.

5.2 *Equipment Unique to This Procedure* (see figs. 1 through 3):

5.2.1 Calibration measure appropriate for sand-cone diameter and hole depth required. The calibration measure dimensions and shape should closely approximate the recommended test hole dimensions and shape.

5.3 *Miscellaneous Equipment.*–Buckets to mix and reclaim sand, a pen with indelible ink or other device for numbering and matchmarking the cone and template, thick paper, and miscellaneous brushes and scoops for reclaiming sand.

5.4 *Sand.*–The sand must be clean, dry, uniform, uncemented, durable, and free flowing. The sand must meet the following criteria:

5.4.1 *Gradation*:

- 100 percent passes the No. 10 (2.00 mm) sieve

- Not more than 5 percent passes the No. 40 (425 μm) sieve
- Not more than 1 percent passes the No. 200 (75 μm) sieve

or

- 100 percent passes the No. 8 (2.36 mm) sieve
- Not more than 5 percent passes the No. 30 (600 μm) sieve
- Not more than 1 percent passes the No. 200 (75 μm) sieve

5.4.2 *Angularity.*–The individual particles should be rounded, subrounded, or subangular.

NOTE 1.–Crushed sand or sand having angular particles may not be free flowing due to bridging or interlocking of the particles. However, some crushed or angular sands have been successfully used with good reproducibility. The reproducibility of test results using angular sand should be carefully checked before acceptance for use.

5.4.3 *Moisture.*–The sand must be oven-dried or air-dried before use. If oven-dried, the sand must be allowed to reach an air-dried state in the general location where it is to be used. In areas where the humidity changes frequently, the effect on the bulk density of the sand must be determined to establish when recalibration is necessary because of humidity changes.

NOTE 2.–Most sands have a tendency to absorb moisture from the atmosphere. A small amount of absorbed moisture can make a substantial change in bulk density.

5.4.4 *New Shipments.*–Each new shipment of sand delivered to a project must be visually inspected to ensure that it is clean, uniform, uncemented, durable, and free flowing. Samples are to be taken from five places within the shipment and tested for gradation and density. To be acceptable, the gradation must meet the requirements of subparagraph 5.4.1 and the density variation between any determination and the average of those determinations must not be greater than 1 percent of the average. Conformance of new shipments must be documented and reports kept with other calibration records.

6. Precautions

6.1 *Safety Precautions*:

6.1.1 This designation may involve hazardous materials, operations, and equipment.

6.1.2 Many brands of sand have warning labels on the sacks. Breathing the dust created when mixing or pouring these sands may be harmful, and appropriate precautions should be taken.

6.2 *Technical Precautions*:

6.2.1 *Consistent Sand Flow*:

6.2.1.1 Sand-cone devices provide consistent sand flow from test to test only if the valve is opened completely each time. A valve that is only partially open can significantly alter the flow characteristics of the sand-cone device.

6.2.1.2 Match the size of the calibration measure used in the sand-cone calibration process to the size of the field test hole. This will keep the drop distance and flow pattern consistent from laboratory to field conditions.

6.2.2 *Vibration of Poured Sand*:

6.2.2.1 Any vibration or jarring of poured sand, whether the pouring process is complete or not, causes densification of the sand and results in erroneous test results. To achieve consistent results, the sand must be free to flow without any outside agitation.

6.2.2.2 Calibration measures must be placed on rigid, vibration-free surfaces while performing the calibration.

6.2.3 *Reclaimed Sand*:

6.2.3.1 As a general rule, reclaiming sand is no longer desirable nor economically feasible.

6.2.3.2 If sand is reclaimed, after each recovery it must be screened over a sieve that would pass its original maximum particle size to eliminate clay balls or other foreign matter. Discard the sand after three usages.

7. Calibration and Standardization

7.1 Verify that the sand calibration measure being used in this procedure is currently calibrated in accordance with USBR 1011. If the calibration is not current, perform the calibration before using the sand calibration measure for this procedure.

8. Conditioning

8.1 Store the sand in covered bins or containers to maintain a uniformly dry condition. A 55-gallon barrel having a valve near the bottom makes an excellent storage container. An internal heat source, such as heat tape, may be necessary in storage containers in areas that experience significant changes in atmospheric moisture.

8.2 When a new supply of sand is placed into the storage bin—and before each calibration—the sand must be thoroughly mixed and blended. Calibration records must document new shipments of sand and the dates new sand is introduced into the current storage bin.

9. Procedure

9.1 All data are to be recorded on the "Calibration of Sand-Cone Equipment and Sand" form as shown on figure 4.

9.2 Marking the sand-cone device and template (new equipment only).

9.2.1 Place and rotate the cone portion of the device on the template until the best possible fit is achieved. Place match marks on the cone and template.

9.2.2 Number the sand-cone device and template. They are a matched set and must be used together.

9.3 *Calibrate the Cone and Template*:

9.3.1 Estimate the mass of sand necessary to fill the cone and template plus an excess approximating the residue remaining after an actual test. Close the valve and place

the predetermined mass of sand into the reservoir of the sand-cone device. Determine and record the mass of the sand-cone device and sand to the nearest 0.01 lbm.

9.3.2 Place the template on thick paper on a flat, rigid surface and attach the sand-cone device. Align the match marks on the sand-cone device and template.

9.3.3 Open the valve completely with a single motion, allowing the sand to flow into and fill the template and cone. While the valve is open, avoid any vibration of the sand-cone device and template which might cause densification of the sand. When the flow of sand has stopped, close the valve and remove the sand-cone device. Determine and record the mass of the sand-cone device and sand residue to the nearest 0.01 lbm.

9.3.4 Calculate and record the mass of sand in the cone and the template to the nearest 0.01 lbm.

9.3.5 Repeat subparagraphs 9.3.1 through 9.3.4 as a second trial.

9.3.6 Determine the uniformity of the two values obtained by dividing either value by the other. If the value of the ratio is between 0.990 and 1.010, inclusive, average the two values and record the average mass to the nearest 0.01 lbm. If the value of the ratio falls outside the limits, go to subparagraph 9.3.7.

9.3.6.1 Compare the average mass with previously determined values to see if it is consistent and reasonable. If it is, go to subparagraph 9.4. If it is not, go to subparagraph 9.3.7.

9.3.7 Verify that all equipment is performing correctly, that all calibrations are correct, and that the procedures and techniques used are correct. If problems are not discovered, then repeat subparagraphs 9.3.1 through 9.3.6. If the values are still inconsistent, go to subparagraph 9.3.8.

9.3.8 Thoroughly mix all the sand being represented by this calibration and repeat subparagraphs 9.3.1 through 9.3.6. If the values are still inconsistent, discard all the sand and repeat the procedure using fresh sand from the original supply.

9.4 *Calibrate the Sand*:

9.4.1 Select an appropriate calibration measure (see subpar. 5.2.1).

9.4.2 Estimate the mass of sand necessary to fill the calibration measure, template, and cone plus an excess approximating the residue remaining after an actual test. Round this amount up to the next larger 5-lbm increment.

9.4.3 Close the valve and place the predetermined mass of sand into the reservoir of the sand-cone device. Determine and record the mass of the sand-cone device and sand to the nearest 0.01 lbm.

9.4.4 Place the calibration measure on a flat, rigid surface and attach the template and sand-cone device. The template hole diameter must be equal to or slightly larger than the inside diameter of the calibration measure. Align the match marks on the sand-cone device and template.

9.4.5 Open the valve completely with a single motion, allowing the sand to flow into and fill the calibration measure, template, and cone. While the valve is open, avoid any vibration of the sand-cone device, template, or measure which might cause densification of the sand. When the flow of sand has stopped, close the valve and determine the mass of the sand-cone device and sand residue. Record the mass to the nearest 0.01 lbm.

9.4.6 Calculate and record the mass of sand in the cone, template, and calibration measure to the nearest 0.01 lbm.

9.4.7 Calculate and record the mass of sand in the calibration measure to the nearest 0.01 lbm.

9.4.8 Record the volumes of the calibration measure (determined in calibration procedure USBR 1011) to the nearest 0.0001 ft^3.

9.4.9 Calculate and record the density of the sand in the calibration measure to the nearest 0.1 lbm/ft^3.

9.4.10 Repeat subparagraphs 9.4.1 through 9.4.9 as a second trial.

9.4.11 Determine the uniformity of the two values obtained by dividing either value by the other. If the value of the ratio is between 0.995 and 1.005, inclusive, average the two values and record the average density to the nearest 0.1 lbm/ft^3. If the value of the ratio falls outside the limits, go to subparagraph 9.4.12.

9.4.11.1 Compare the average density with previously determined values to see if it is consistent and reasonable. If it is, go to paragraph 11. If it is not, go to subparagraph 9.4.12.

9.4.12 Verify that all equipment is performing correctly, that all calibrations are correct, and that the procedures and techniques used are correct. If problems are not discovered, then repeat subparagraphs 9.4.1 through 9.4.11. If the values are still inconsistent, go to subparagraph 9.4.13.

9.4.13 Thoroughly mix all the sand being represented by this calibration and repeat subparagraphs 9.4.1 through 9.4.11. If the values are still inconsistent, discard all the sand and repeat the procedure beginning at subparagraph 9.3 using fresh sand from the original supply.

10. Calculations

10.1 Calculate the mass of sand in the cone and template.

$$m_3 = m_1 - m_2 \quad (1)$$

where:

m_1 = initial mass of sand and sand-cone device (cone calibration), lbm
m_2 = final mass of sand and sand-cone device (cone calibration), lbm
m_3 = mass of sand in cone and template, lbm

10.2 Calculate the mass of sand in the calibration measure.

$$m_7 = m_5 - m_6 \quad (2)$$
$$m_8 = m_7 - m_4 \quad (3)$$

where:

m_4 = average mass of sand in cone and template, lbm
m_5 = initial mass of sand and sand-cone device (sand calibration), lbm

m_6 = final mass of sand and sand-cone device (sand calibration), lbm
m_7 = mass of sand in cone, template, and calibration measure, lbm
m_8 = mass of sand in calibration measure, lbm

10.3 Calculate the density of the sand.

$$\rho_s = \frac{m_8}{V} \quad (4)$$

where:
ρ_s = density of calibrated sand, lbm/ft³
m_8 = mass of sand in calibration measure, lbm
V = volume of calibration measure (from USBR 1011), ft³

11. Report

11.1 The report is to consist of a completed and checked "Calibration of Sand-Cone Equipment and Sand" form (fig. 4).

11.2 All calculations are to show a checkmark.

11.3 The calibration values should be displayed in the area where field unit weight test results are computed and also filed with laboratory equipment calibration records.

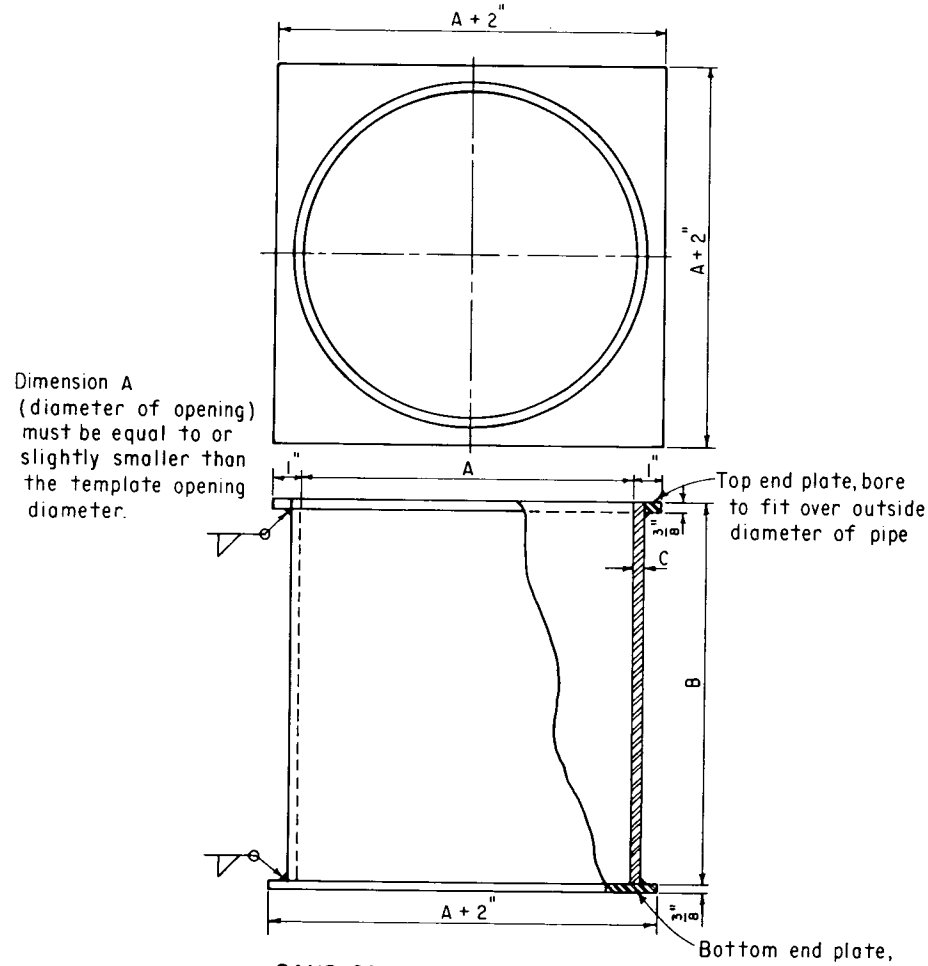

NOTES

May be fabricated from standard weight steel pipe.
Weld top and bottom end plates perpendicular to bore of pipe.

NOMINAL VOLUME (CU. FT.)	A NOMINAL DIAMETER (INCHES)	B NOMINAL HEIGHT	C WALL* THICKNESS (INCHES)
0.35	8	12	0.322
0.92	12	14	0.375

* If standard pipe is used

Figure 1. – Sand calibration measures.

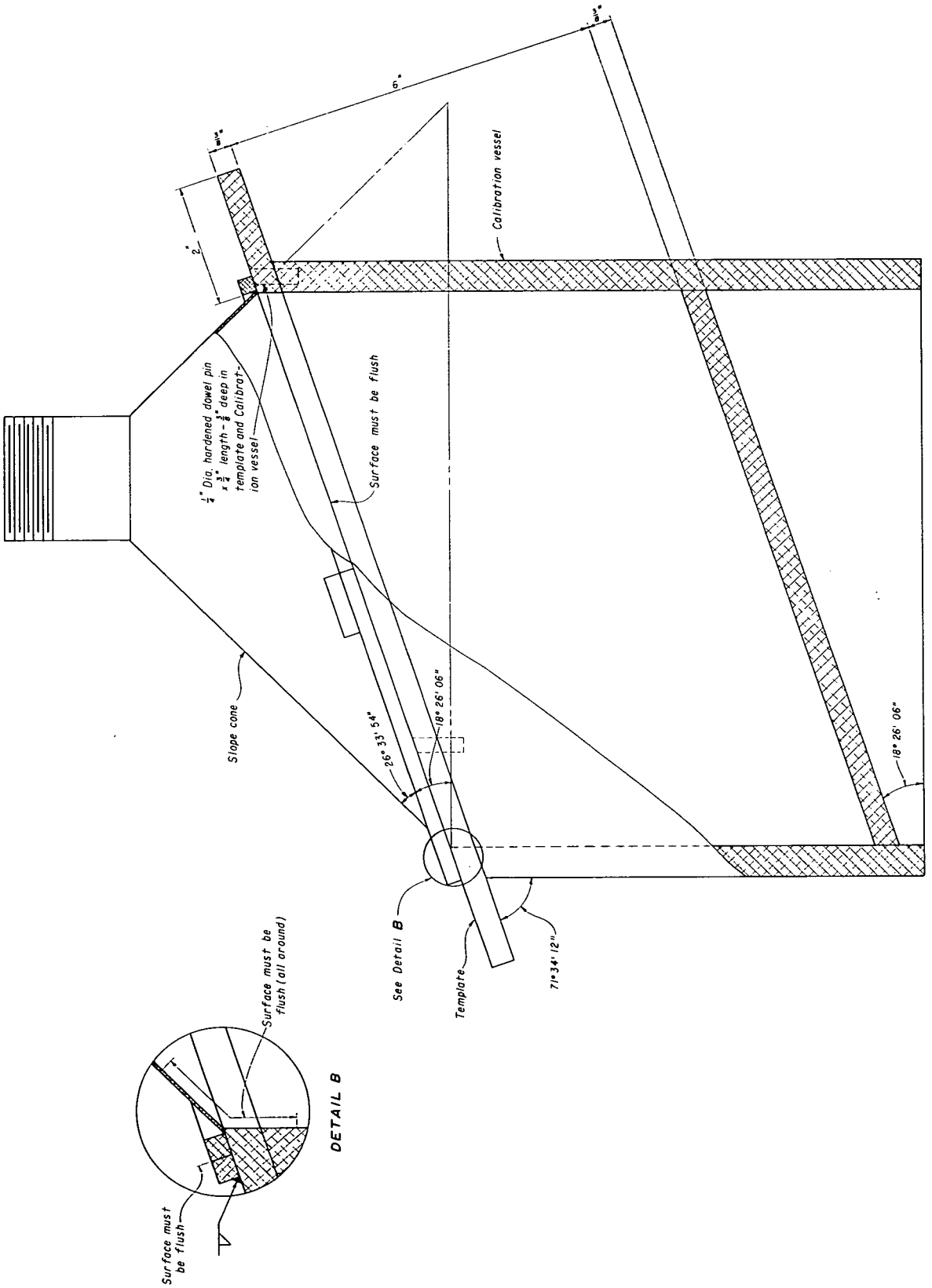

Figure 2. – Slope cone calibration vessel. (801-D-228)

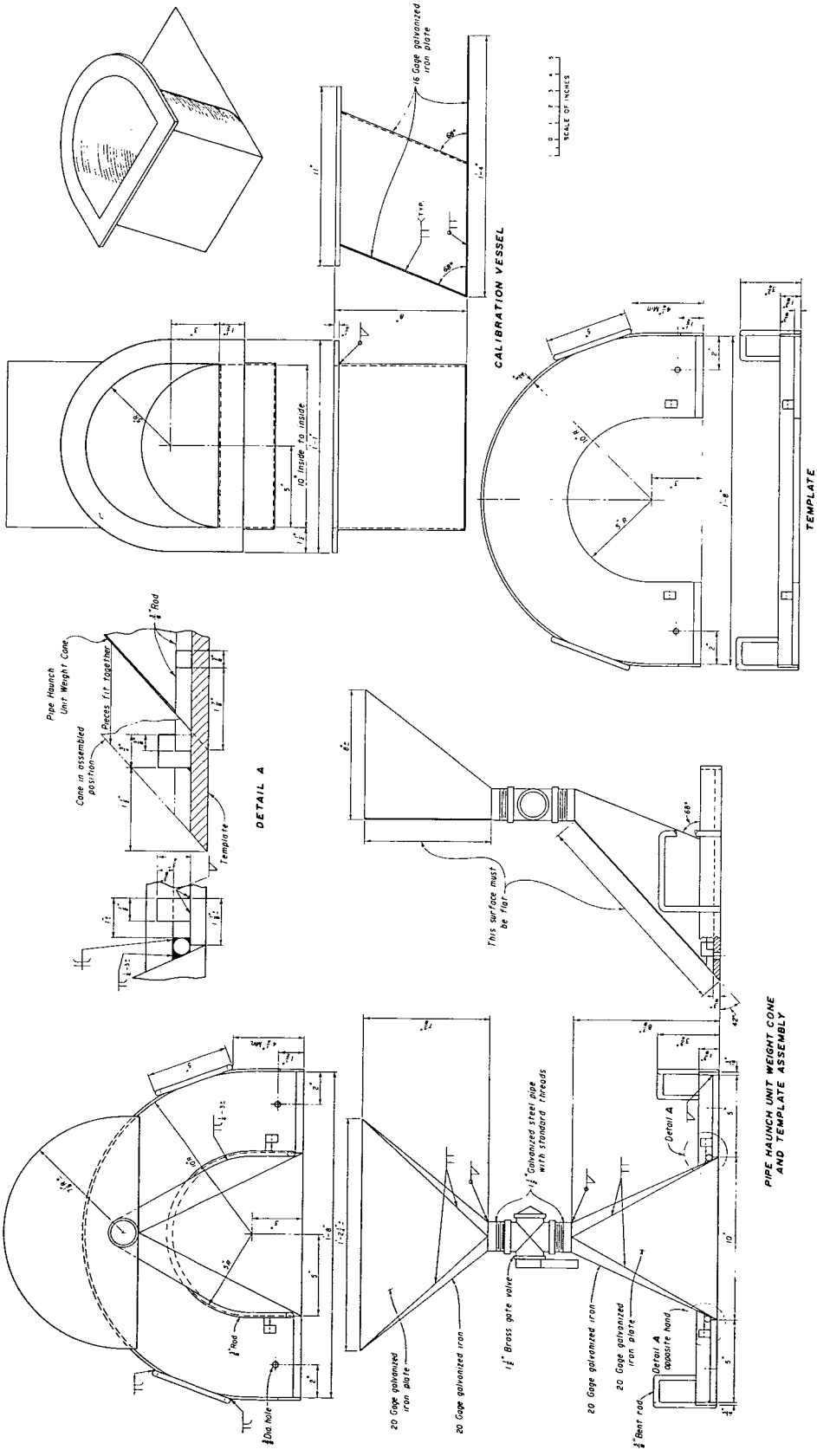

Figure 3. – Pipe haunch calibration vessel. (801-D-223)

7-1657 (12-86)
Bureau of Reclamation

CALIBRATION OF SAND-CONE EQUIPMENT AND SAND

Designation USBR 1435-89

CALIBRATION PERFORMED BY | DATE | CHECKED BY | DATE

SAND SOURCE: Example | DELIVERY DATE: 2-22-89

CALIBRATION MEASURE DIMENSIONS: 8 inch diameter by 12 inch height

CALIBRATION OF SAND CONE AND TEMPLATE NO. 1

		TRIAL 1	TRIAL 2	
(1)	INITIAL MASS OF SAND + SAND CONE DEVICE	25.50	25.50	lbm
(2)	FINAL MASS OF SAND + SAND CONE DEVICE	21.13	21.10	lbm
(3)	MASS OF SAND IN CONE AND TEMPLATE (1) - (2)	4.37	4.40	lbm
(4)	AVERAGE MASS OF SAND IN CONE AND TEMPLATE	4.39		lbm

CALIBRATION OF SAND

(5)	INITIAL MASS OF SAND + SAND CONE DEVICE	60.00	60.00	lbm
(6)	FINAL MASS OF SAND + SAND CONE DEVICE	21.13	21.30	lbm
(7)	MASS OF SAND IN CONE, TEMPLATE, AND CALIBRATION MEASURE (5) - (6)	38.87	38.70	lbm
(8)	MASS OF SAND IN CALIBRATION MEASURE (7) - (4)	34.48	34.31	lbm
(9)	VOLUME OF CALIBRATION MEASURE NO. 8	0.3491	0.3491	ft^3
(10)	DENSITY OF SAND (8) / (9)	98.8	98.3	lbm/ft^3
(11)	AVERAGE DENSITY OF SAND	98.6		lbm/ft^3

SAND MEETS GRADATION CRITERIA OF USBR 1435: yes [X] no [ ]

AUXILIARY TEST: USBR 1011-89

REMARKS: Subrounded to rounded, #16-#30, silica sand - 1000 lbm delivered 2-22-89.

Figure 4. – Calibration of sand-cone equipment and sand — example.

UNITED STATES DEPARTMENT OF THE INTERIOR
BUREAU OF RECLAMATION

USBR 1436-89

PROCEDURE FOR

CALIBRATING SAND POURING EQUIPMENT AND SAND

INTRODUCTION

This procedure is under the jurisdiction of the Geotechnical Services Branch, code D-3760, Research and Laboratory Services Division, Denver Office, Denver, Colorado. The procedure is issued under the fixed designation USBR 1436. The number immediately following the designation indicates the year of acceptance or the year of last revision.

1. Scope

1.1 This designation outlines the procedure for calibrating sand pouring equipment and sand. Sand pouring equipment and sand are used for determining the volume of test holes or pits that are too large for sand-cone devices.

1.2 The calibration procedure is performed to obtain values for use in measuring the volume of a field unit weight test pit excavated in accordance with USBR 7220.

2. Applicable Documents

2.1 *USBR Procedures*:

USBR 1011 Calibrating Measures for Sand Calibration
USBR 1435 Calibrating Sand-Cone Equipment and Sand
USBR 7220 Determining Unit Weight of Soils In-Place by the Sand Replacement Method in a Test Pit

3. Summary of Method

3.1 Using a specific pouring device, sand is poured into a calibration mold of similar size and shape of a field test pit to determine the density of the sand as poured under specific conditions.

4. Significance and Use

4.1 This calibration procedure is performed to obtain the value of density of the sand using a specific pouring device for use in measuring the volume of a field unit weight test pit. A test pit is used when the required volume of the excavation is too large to use sand-cone devices.

4.2 This procedure should be performed:

4.2.1 When a new supply of sand is processed into the storage bin.

4.2.2 When several unit weight tests are required, on a daily basis, the sand should be calibrated weekly.

4.2.3 If tests are made at infrequent intervals, the sand must be calibrated before a test or series of tests is begun.

4.2.4 If tests are made routinely using reclaimed sand, calibrate when the cumulative mass of the sand removed from the storage container equals the capacity of the container. A record of the mass of sand removed should be kept at a convenient location on or near the container.

4.2.5 In areas where the humidity changes frequently, the effect on the bulk density of the sand must be determined to establish when recalibration is necessary because of humidity changes.

NOTE 1.–Most sands have a tendency to absorb moisture from the atmosphere. A small amount of absorbed moisture can make a substantial change in bulk density.

4.2.6 For any change in equipment, personnel, or size and shape of the field test pit and calibation mold.

5. Apparatus

5.1 *General Apparatus*:

5.1.1 *Straightedge.*–A metal straightedge about 2 inches high, at least 1/8-inch thick, and with a length 1.5 times the side length of the metal template.

5.1.2 *Mold.*–A mold or container that is similar to the size and shape of the test pit to be excavated in the material being tested. The volume of the mold must be determined by the water filling method in accordance with the principles described in USBR 1011.

5.1.3 *Balance or Scale.*–A typical balance or scale used for this designation must be readable to 0.01 lbm and have a capacity of about 100 lbm.

5.1.4 *Drying Oven.*–An oven, thermostatically controlled, preferably of the forced-draft type, and capable of maintaining a uniform temperature of 230±9 °F (110±5 °C) throughout the drying chamber.

5.2 *Equipment Unique to This Procedure* (fig. 1):

5.2.1 *Pouring Device.*–Many types of pouring devices are available. The major requirement is that the device has a spout that will reach into a field test pit so that the drop distance from the end of the spout to the sand surface can be maintained at about 2 inches (see USBR 7220).

5.3 *Sand.*–The sand must conform to the requirements stated in USBR 1435.

5.4 *Miscellaneous Equipment.*–Buckets to mix and reclaim sand, pans, thick paper, and miscellaneous brushes and scoops for reclaiming sand.

6. Precautions

6.1 *Safety Precautions*:

6.1.1 This designation may involve hazardous materials, operations, and equipment.

6.1.2 Many brands of sand have warning labels on the sacks. Breathing the dust created when mixing or

pouring these sands may be harmful, and appropriate precautions should be taken.

6.2 *Technical Precautions*:

6.2.1 *Consistent Sand Flow*:

6.2.1.1 Pouring devices with valves provide consistent sand flow from test to test only if the valve is opened completely each time. A valve that is only partially open can significantly alter the flow characteristics of the device. Each individual pouring device has unique characteristics which may cause the sand to flow from it differently. The final calibration values are affected by changes in these flow characteristics. Consequently, calibration values are not interchangeable, even for devices which may appear to be identical.

6.2.1.2 Pouring devices must not be allowed to run out of sand during the pouring operation. The size of the stream of poured sand from the pouring device should be constant. If the reservoir capacity of the pouring device is too small to fill the calibration mold with one pour, use two or more pours to fill the mold. Stop the stream of sand when the reservoir is about three-fourths empty and before the size of the stream diminishes. Refill the reservoir and resume pouring.

6.2.1.3 Pouring devices permit a varied sand drop distance that must be carefully controlled if consistent results are to be achieved. A distance of 2 inches from the end of the spout to the surface being poured is recommended. Variations in the drop distance can significantly affect calibration results. The drop distance is directly affected by the operator's ability to control the pouring device and by the operator's judgment of the drop distance while doing so. This involves stooping while holding a pouring device with an initial mass of 50 lbm or more that is constantly changing in mass as the sand flows into the pit. Calibration values are not interchangeable from device to device and are not necessarily interchangeable from operator to operator. Individual operators must demonstrate that they can duplicate the calibration values for a device before they may use them. Otherwise, separate calibrations for the various operators are required.

6.2.2 *Vibration of Poured Sand*:

6.2.2.1 Any vibration or jarring of poured sand, whether the pouring process is complete or not, causes densification of the sand and results in erroneous test results. To achieve consistent results, the sand must be free to flow without any outside agitation.

6.2.2.2 Striking off material above the top of calibration molds must be done consistently with as little vibration as possible.

6.2.2.3 Calibration molds must be placed on rigid, vibration-free surfaces while performing the calibration.

6.2.3 *Reclaimed Sand*:

6.2.3.1 As a general rule, reclaiming sand is no longer desirable nor economically feasible.

6.2.3.2 If sand is reclaimed, after each recovery it must be screened over a sieve that would pass its original maximum particle size to eliminate clay balls or other foreign matter. Discard the sand after three usages.

7. Calibration and Standardization

7.1 Verify that the calibration mold being used in this procedure is currently calibrated in accordance with the applicable calibration procedure. If the calibration is not current, perform the calibration before using the equipment for this procedure.

7.2 Verify that the sand conforms to the requirements in USBR 1435.

8. Conditioning

8.1 Store the sand in covered bins or containers to maintain a uniformly dry condition. A 55-gallon barrel having a valve near the bottom makes an excellent storage container. An internal heat source, such as heat tape, may be necessary in storage containers in areas that experience significant changes in atmospheric moisture.

8.2 When a new supply of sand is introduced into the storage bin—and before each calibration—the sand must be thoroughly mixed and blended. Calibration records must document new shipments of sand and the dates new sand is placed into the current storage bin.

9. Procedure

9.1 All data are to be recorded on the "Calibration of Sand Pouring Equipment and Sand" form as shown on figure 2.

9.2 *Calibrate the Sand*:

9.2.1 Place the 0.5-ft^3 calibration mold on a rigid surface.

9.2.2 Using the pouring device, pour the sand into the calibration mold, slightly overfilling. Use a circular motion to keep the sand surface relatively level. The end of the spout should be kept about 2 inches above the sand surface while pouring. A constant sand drop distance and an avoidance of any vibration of the measure are critical to the achievement of consistent results. (See subpar. 6.2.2.)

9.2.2.1 If the reservoir capacity is too small to fill the calibration mold with one pour, use two or more pours to fill the mold. See subparagraph 6.2.1.2 for the procedure to follow when more than one pour is necessary.

9.2.3 Strike off the excess sand—even with the top of the calibration mold—using the metal straightedge. (See subpar. 6.2.2.2.)

9.2.4 Determine the mass of the sand and calibration mold and record to the nearest 0.01 lbm.

NOTE 2.–The calibration mold may be too large and awkward to determine its mass. In this case, the mass of the sand used to fill the mold may be determined by beginning with a predetermined initial mass of sand and subtracting the mass of the sand residue from the initial mass.

9.2.5 Record the volume of the calibration mold (determined in the calibration procedure USBR 1011) to the nearest 0.001 ft^3.

9.2.6 Calculate the mass of sand in the calibration mold and record to the nearest 0.01 lbm.

9.2.7 Calculate the density of the sand and record to the nearest 0.1 lbm/ft³.

9.2.8 Repeat subparagraphs 9.2.1 through 9.2.7 as a second trial.

9.2.9 Determine the uniformity of the two values obtained by dividing either value by the other. If the value of the ratio is between 0.990 and 1.010, inclusive, average the two values and record the average density to the nearest 0.1 lbm/ft³. If the value of the ratio falls outside the limits, go to subparagraph 9.2.10.

9.2.9.1 Compare the average density with previously determined values to see if it is consistent and reasonable. If it is, go to paragraph 11. If it is not, go to subparagraph 9.2.10.

9.2.10 Verify that all equipment is performing correctly, that all calibrations are correct, and that the procedures and techniques used are correct. If problems are not discovered, then repeat subparagraphs 9.2.1 through 9.2.9. If the values are still inconsistent, go to subparagraph 9.2.11.

9.2.11 Thoroughly mix all the sand being represented by this calibration and repeat subparagraphs 9.2.1 through 9.2.9. If the values are still inconsistent, discard all the sand and repeat the procedure using fresh sand from the original supply.

10. Calculations

10.1 Calculate the density of the sand.

$$\rho_s = \frac{m}{V}$$

where:

ρ_s = density of sand, lbm/ft³
m = mass of sand in calibration measure, lbm
V = volume of calibration measure, ft³

11. Report

11.1 The report is to consist of a completed and checked "Calibration of Sand Pouring Equipment and Sand" form (fig. 2).

11.2 All calculations are to show a checkmark.

11.3 The calibration values should be displayed in the area where field unit weight test results are computed and filed with the laboratory equipment calibration records.

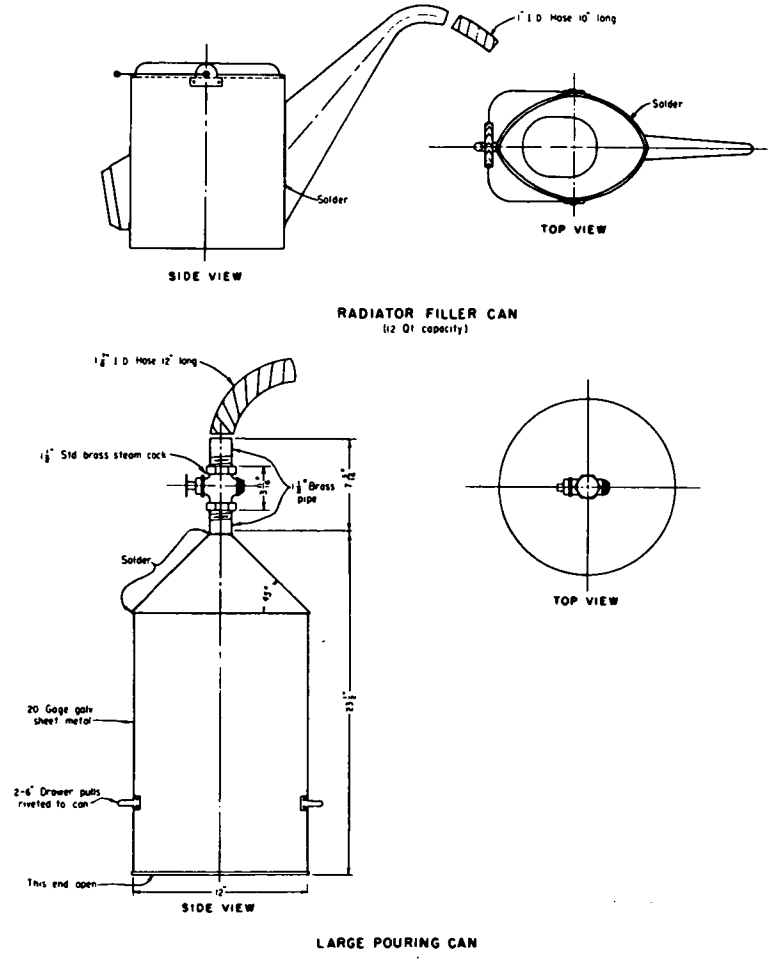

Figure 1. – Sand pouring devices. 101-D-341

7-1657A (12-86) Bureau of Reclamation	CALIBRATION OF SAND POURING EQUIPMENT AND SAND	Designation USBR 1436-89
CALIBRATION PERFORMED BY	DATE	CHECKED BY / DATE
SAND SOURCE		DELIVERY DATE

CALIBRATION OF SAND USING SPOUT NO. 2

		TRIAL 1	TRIAL 2	
(1)	MASS OF SAND + MEASURE	68.61	68.41	lbm
(2)	TARE MASS OF MEASURE	19.36	19.36	lbm
(3)	MASS OF SAND IN MEASURE (1) - (2)	49.25	49.05	lbm
(4)	VOLUME OF MEASURE*	0.501	0.501	ft^3
(5)	DENSITY OF SAND (3) / (4)	98.3	97.9	lbm/ft^3
(6)	AVERAGE DENSITY OF SAND	98.1		lbm/ft^3

SAND MEETS GRADATION CRITERIA OF USBR 1435 — yes [X] no [ ]

*VOLUME IN ACCORDANCE WITH AUXILIARY TEST USBR 1010-89

REMARKS: 98.3/97.9 = 1.004 < 1.010

Figure 2. – Calibration of sand pouring equipment and sand — example.

UNITED STATES DEPARTMENT OF THE INTERIOR
BUREAU OF RECLAMATION

USBR 1440-89

PROCEDURE FOR

CALIBRATING THE VIBRATORY TABLE FOR MAXIMUM INDEX UNIT WEIGHT TESTING

INTRODUCTION

This procedure is under the jurisdiction of the Geotechnical Services Branch, code D-3760, Research and Laboratory Services Division, Denver Office, Denver, Colorado. This procedure is issued under the fixed designation USBR 1440. The number immediately following the designation indicates the year of acceptance or the year of last revision.

1. Scope

1.1 This designation outlines the procedure for calibrating the vibratory table used for determining the maximum index unit weight of cohesionless soils in the laboratory as performed in accordance with USBR 5530.

1.2 This procedure is limited to the Syntron Model V-80 cushioned vibratory table manufactered before 1965, and the Syntron Model V-75 solid impact vibratory table which is currently the only model accepted by USBR that can be purchased new.

1.3 This calibration procedure is used to determine the vertical amplitude of the vibrating tables described in subparagraph 1.2 and to adjust the table—if necessary—to an average double amplitude (peak-to-peak) displacement of 0.013±0.002 inch (0.33±0.05 mm) at 60-hertz frequency.

2. Auxiliary Tests

2.1 The LVDTs (linear variable differential transformers) used to measure the vertical amplitude of the vibratory table must be calibrated in accordance with USBR 1008 prior to performing this procedure.

3. Applicable Documents

3.1 *USBR Procedures*:
USBR 1008 Calibrating Linear Variable Differential Transformers
USBR 5530 Determining the Maximum Index Unit Weight of Cohesionless Soils

3.2 *ASTM Standard*:
D 4253 Maximum Index Density of Soils Using a Vibratory Table

3.3 *Journal*:
Geotechnical Testing Journal, Suggested Method for the Calibration of Vibrating Tables for Maximum Index Density Testing, vol. 2, No. 2, pp. 152-157, Sept., 1979.

4. Summary of Method

4.1 Calibration masses of 300 and 95 lbm (136 and 43 kg) are securely anchored to the vibratory table deck. The amplitude of vibration produced by the vibratory table is measured using LVDTs which are attached to the calibration masses. The amplitude of vibration of the vibratory table is checked at rheostat control settings of 100, 80, 60, 40, 20, and 0. The measured amplitude is compared to that which is required, and adjustments are made to the table if necessary.

5. Significance and Use

5.1 For many cohesionless, free-draining soils, maximum index unit weight is a key element in evaluating the state of compactness of a given soil mass which occurs either naturally or is placed during construction (fill).

5.2 The double amplitude of vertical vibration has been found to have a significant effect on the soil index unit weight obtained in the laboratory. Vibratory tables that subject a unit weight mold with soil to a double amplitude vertical vibration of something other than 0.013±0.002 inch (0.33±0.05 mm), at 60 Hz, produce inconsistent maximum index unit weight values using USBR 5530.

5.3 This calibration procedure is to be performed upon receipt of the table, biennially thereafter, before reuse after any event such as relocation or repairs which might affect its operation, and whenever test results are questionable.

6. Apparatus (see schematic fig. X2.1)

6.1 *Vibrating Table* (fig. 1).–A vibratory table securely mounted to a concrete floor or mass of sufficient size and configuration that excess vibrations are not transmitted to other testing areas. The vertically vibrating deck of the table is to be of sufficient size and rigidity that the mass assembly being used can be attached and rigidly supported during the calibration. The table is to be capable of vertically vibrating the mold assembly with a sinusoidal time-vertical displacement relationship at an average double amplitude (peak-to-peak displacement) of 0.013±0.002 inch (0.33±0.05 mm) at 60-Hz frequency. The table should have the capability for adjustment of the double amplitude of vibration between about 0.005 inch (0.15 mm) and 0.013 inch (0.33 mm) at 60 Hz.

6.2 *Linear Variable Differential Transformer* (LVDT).–LVDT, a.c., capable of accurately measuring linear

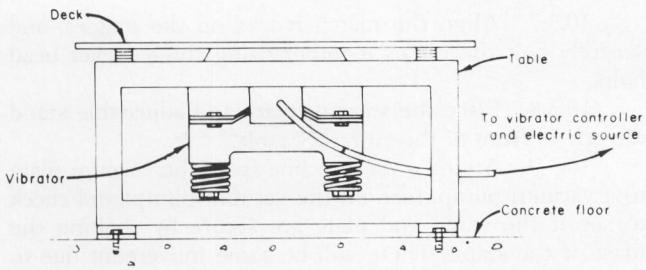

Figure 1. – Schematic of vibratory table.

displacement within 0.0005 inch. Minimum nominal displacement range ±0.050 inch, maximum nominal displacement range ±1.00 inch. The LVDTs are to have a No. 6-40 UNF threaded core. The two LVDTs needed should meet these requirements.

6.2.1 *LVDT Core Extension Rods.*–1/8-inch diameter, nonmagnetic (preferably brass) rods, threaded on both ends, No. 6-40 UNF thread, for a minimum length of 1 inch at each end; having an approximate length of 2-1/2 inches; two rods required.

6.2.2 *LVDT Guides.*–LVDT Teflon guides which can be purchased from the LVDT manufacturer; four guides required. The purpose of Teflon guides is to ensure no horizontal movement of the LVDT core during use.

6.3 *Calibration Masses*:

6.3.1 A three-piece calibration mass having a combined mass of 300 lbm (136 kg) used to simulate the mass of the loaded 0.5-ft^3 (14 200-cm^3) measure. Flat surfaces on the calibration masses must be ground flat, parallel, and to at least a 63 finish to ensure proper contact.

NOTE 1.–A 63 finish refers to the average peak-to-valley distance in microinches on the surface of the calibration masses.

6.3.2 A one-piece calibration mass of 95 lbm (43 kg) used to simulate the mass of the loaded 0.1-ft^3 (2830-cm^3) measure.

6.4 *Signal Conditioner.*–A signal conditioner to provide a constant a-c input to the LVDT and convert the output from a.c. to a proportional d-c signal.

6.5 *Storage Oscilloscope.*–A storage oscilloscope used to record the output of the LVDT. A dual-beam, cathode-ray oscilloscope is required to check the vibrating table for rocking motion. The oscilloscope is to be fitted with a suitable camera to make a permanent record of the table vibration wave form.

6.6 *Digital Voltmeter.*–A digital voltmeter with a measuring range of 1 mV to 250 volts with both a-c and d-c functions used for both the initial calibration of the LVDT and for centering the LVDT core in the body before each measurement of the vibration amplitude. The voltmeter is used also to check the value and variation of a-c power onsite.

6.7 *Stationary Frame* (fig. 2).–A stationary frame used to hold the LVDT body in place and in isolation from external vibrations. The stationary frame consists of an adjustable stand and vacuum plate to provide a solid base for the stand.

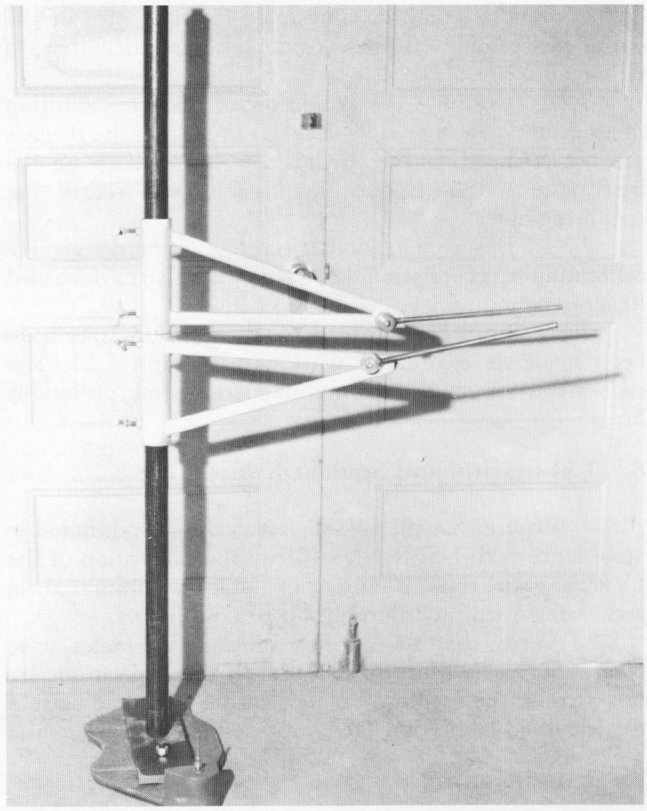

Figure 2. – Stationary calibration frame.

6.8 *Feeler Gauge.*–A feeler gauge having a thickness of 0.020 inch (0.51 mm) used for periodic calibration checks of the LVDT between vibration measurements.

6.9 *Ear Protectors* (required).–Ear protectors are to be worn by all personnel performing the calibration. The vibratory table produces a noise level in excess of 140 dB.

6.10 *Miscellaneous Equipment.* – Combination wrenches, one end box and one end open; to include 1-1/4-, 15/16-, and 9/16-inch size; adjustable wrenches, one 8- and one 10-inch; 8-ounce ball peen hammer.

7. Precautions

7.1 *Safety Precautions*:

7.1.1 Ensure that the vibratory table and controller are properly grounded to avoid possible electrical shock.

7.1.2 Ear protectors are to be worn by all personnel while working in the vicinity of the vibratory table during operation.

7.2 *Technical Precautions*:

7.2.1 Check all mounts on the vibratory table for cracks and loose bolts; repair or replace if necessary.

7.2.2 Ensure that the vibratory table is mounted level and securely to a solid concrete slab or foundation.

7.2.3 Ensure that the mounting holes for the index unit weight measures are drilled in the locations as shown on figure X2.3. If the holes are not in the locations as shown, the vibratory table can exhibit out-of-phase

oscillation. The resulting amplitude at the center of the out-of-phase table can be considerably less than that on either side.

7.2.4 Examine the condition of all the mounting holes on the vibratory table deck to ensure that the threads are not stripped. If the threads are stripped, rotate the bolt pattern 180 degrees, if possible, and redrill the mounting holes.

7.2.5 Ensure that the flat surfaces of the three-piece calibration mass are ground to a smooth finish as described in subparagraph 6.3.1.

7.2.6 Ensure that the LVDT extension rods have been made in accordance with subparagraph 6.2.1. The rods are to be made of a nonmagnetic metal, preferably brass.

8. Calibration and Standardization

8.1 Ensure that the LVDTs are currently calibrated in accordance with USBR 1008. Verify the calibration of the LVDTs each time a vibratory table is calibrated in accordance with procedure in subparagraph 10.4.

8.2 Verify that the oscilloscope and voltmeter have been calibrated within the last year. If the calibrations are not current, the oscilloscope and voltmeter should be sent to a qualified calibration agency for calibration prior to use.

9. Conditioning

9.1 Allow all electronic equipment to warm up for a minimum of 30 minutes prior to use to ensure stability.

9.2 Calibrate the vibratory table in its permanently mounted location.

10. Procedure

10.1 All data are to be recorded on the "Vibratory Table Calibration Sheet" as shown on figure 3.

10.2 Locate and record all pertinent information as shown on figure 3. Be sure to include *Remarks* with regard to voltage source characteristics as well as table mount location and condition.

10.3 *Calibration Using the 300-lbm Calibration Mass*:

10.3.1 Place the bottom one-third of the 300-lbm (136-kg) calibration mass on the vibratory table deck.

10.3.2 Align the bolt down tabs with the appropriate mounting holes, being sure that the front mark on the calibration mass is to the front of the table.

10.3.3 Secure the calibration mass to the table using three 3/8-inch-diameter bolts having a minimum length of 1-1/4 inches.

10.3.4 Place the second one-third of the 300-lbm calibration mass on top of the bottom calibration mass.

10.3.5 Align the match marks on the masses, then securely bolt the two pieces together using three socket head bolts.

10.3.6 Place the top one-third of the 300-lbm calibration mass onto the two calibration masses already bolted in place.

10.3.7 Align the match marks on the masses, and securely bolt the pieces together using three socket head bolts.

10.3.8 Place the vacuum plate and adjustable stand directly in front of the vibratory table.

10.3.9 Attach a vacuum line from the vacuum plate to a vacuum pump, turn on the vacuum pump, and check to see if the stand and plate are secure by shaking the mast of the stand. There will be some movement due to flexing of the steel pipe; however, the vacuum plate should not move.

10.3.10 Slide the two calibration stand brackets over the mast, and attach and secure the bracket extension arms.

10.3.11 Position the lower bracket over the right side of the calibration mass and the upper bracket over the left side of the calibration mass, and secure each using the locking bolts on the calibration stand bracket.

10.3.12 Ensure that all personnel in the vicinity of the vibratory table are wearing ear protectors.

10.3.13 Turn the rheostat located on the control box to the 100-percent setting, and activate the vibrator by moving the on/off switch to the "on" position.

10.3.14 Allow the vibratory table to operate at this setting for a minimum of 5 minutes, and then deactivate the vibrator by moving the on/off switch to the "off" position.

10.4 *Verification of LVDT Calibration*:

10.4.1 Connect the oscilloscope and amplifier to a power supply in accordance with the manufacturer's specifications.

10.4.2 Attach LVDT No. 1 cable to channel No. 1 of the amplifier. Similarly, attach the LVDT No. 2 cable to channel No. 2 of the amplifier.

10.4.3 Attach the output cable from channel No. 1 of the amplifier to channel No. 1 of the oscilloscope. Similarly, attach the output cable from channel No. 2 of the amplifier to channel No. 2 of the oscilloscope.

10.4.4 Connect the voltmeter to the terminal of the amplifier such that the voltage output of the LVDTs can be constantly monitored.

10.4.5 Attach the LVDT mounting block to the LVDT mounting block carrier as shown on figure X2.2.

10.4.6 Slide the LVDT mounting block assembly onto the bracket extension arm, and loosely secure it in place by slightly turning the thumb screw.

10.4.7 Attach the Teflon guides and LVDT core extension rod to the core of LVDT No. 1 as shown on figure 4a. The purpose of the Teflon guides is to ensure that, when the LVDT core is being displaced for calibration verification, there is no horizontal movement which could affect the calibration.

10.4.8 Slide the body of LVDT No. 1 into the mounting block assembly attached to the bracket extension arm located over the right side of the calibration mass, and secure the LVDT body in place by tightening the mounting block screw.

10.4.9 Position the LVDT core with the extension rod attached (fig. 4a) into the body of the LVDT.

7-2330 (11-85) Bureau of Reclamation	VIBRATORY TABLE CALIBRATION SHEET	Designation USBR 1440 - 8 9

Manufacturer: Example

Calibration performed by: _____ Date: _____

Calibration checked by: _____ Date: _____

	Model	Serial No.
Table	VP75 A	6035
Vibrator	V75	C22724
Controller	Special R7479I	60037

Rated voltage: 230 Vac 60 Hz

Site voltage: 240 Vac 60 Hz

Remarks (voltage): Voltage drops from 240 Vac at generator to 236 Vac at table.

	Yes	No
Top mounts replaced		X
Bottom mounts replaced		X

Remarks (mounting): Table mounted and anchored to a concrete slab.

Date of last calibration: None (New table) Location: Example

As-found double amplitude (inches) with 300 lbm [X] 95 lbm [ ] calibration mass at rheostat setting 100:

Left side	Right side	Center	Load (amps)
0.009	0.010	0.009	6.2

Vibrator unit:	Yes	No.
Dismantled	X	
Cleaned	X	
Adjusted	X	

Remarks: Table mounted inside 8-by 10-foot metal shed, power to the vibratory table furnished by ac generator. Voltage and frequency are adjustable on this unit.

Figure 3. - Vibratory table calibration sheet — example.

300 lbm calibration mass

Simulates 0.5-ft^3 test apparatus and soil mass

Rheostat setting (%)	Double amplitude left side (inches)	Double amplitude right side (inches)	Double amplitude center (inches)	Load (amps)
100	0.012	0.012	0.012	6.2
80			0.012	6.1
60			0.007	5.3
40			0.004	4.4
20			0.003	3.8
0			0.002	3.5

Recommended Rheostat Setting 100%

Remarks

95 lbm calibration mass

Simulates 0.1-ft^3 test apparatus and soil mass

Rheostat setting (%)	Double amplitude left side (inches)	Double amplitude right side (inches)	Double amplitude center (inches)	Load (amps)
100*	0.014	0.014	0.014	6.1
80	0.014	0.014	0.014	6.0
60			0.012	5.7
40			0.008	4.6
20			0.003	4.4
0			0.002	3.5

Recommended Rheostat Setting 80%

Remarks * Striking of pole faces observed at this setting, DO NOT OPERATE VIBRATOR AT 100 %.

GPO 849-230

Figure 3. - Vibratory table calibration sheet — example — Continued.

10.4.10 Position the LVDT body by sliding the mounting block assembly along the bracket extension arm and/or by moving the bracket arm itself if necessary, such that the core extension rod firmly rests near the No. 6-40 UNF threaded hole located on the top surface of the calibration mass, and securely tighten it in place.

10.4.11 Adjust the calibration stand bracket and/or the height of the LVDT body within the mounting block so that, when the LVDT core extension rod rests firmly on the top surface of the calibration mass, the output on the voltmeter is at or near 0.0 volt. Ensure that the toggle switch on the amplifier control box is set to the appropriate LVDT and that the voltmeter is set on the d-c function. The voltmeter range should be set at 20 volts d.c. or less to obtain the sensitivity required to measure 1 mV.

10.4.12 Position the output signal of the LVDT on the oscilloscope such that the horizontal line is set on the first major division from the bottom of the screen. Refer to the oscilloscope instruction manual for the correct oscilloscope setting.

10.4.13 Carefully slide the 0.020-inch (0.51-mm) thick feeler gauge between the LVDT core extension rod and the calibration mass as shown on figure 4b.

10.4.14 The voltmeter output should indicate a change of 0.200 volts d.c. Check the signal trace on the oscilloscope for proper placement. Remove the feeler gauge. The voltmeter should indicate the initial voltage as in subparagraph 10.4.11, and the output signal of the LVDT should return to the position set in subparagraph 10.4.12. If these results are not obtained, adjust the amplifier accordingly by turning the gain control and repeating subparagraphs 10.4.11 through 10.4.14 as often as required to ensure correct adjustment.

NOTE 2.–If an LVDT with a measuring range other than 2 inches (50 mm) is used the voltage output is computed using the following equation:

$$D_v = \frac{D_k D_T}{M_r}$$

where:

D_v = voltage output of the transducer, V
D_k = known displacement, in or mm
D_T = total voltage output of the LVDT, V; (typically a 20-volt range, ±10 volts as per manufacturer's specifications)
M_r = total measuring range of the LVDT, in or mm

10.4.15 Remove the core and core extension rod from the LVDT, and remove the Teflon guides.

10.4.16 Reattach the core extension rod to the LDVT core.

10.4.17 Repeat subparagraphs 10.4.5 through 10.4.16 for LVDT No. 2 located over the left side of the calibration mass.

CAUTION: Do not lean, stand, or rest on the vibratory table while the LVDT calibrations are being verified. The slightest amount of movement can affect the calibration.

10.5 *Double Amplitude and Frequency Measurement* ("as found condition"):

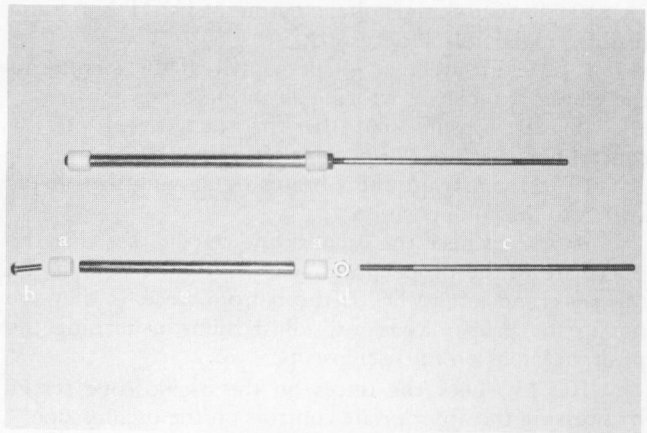

(a) LVDT core/core extension rod assembly. a) teflon guide, b) No. 6-40 UNF threaded screw, c) LVDT core extension rod, d) lock nut, and e) LVDT core.

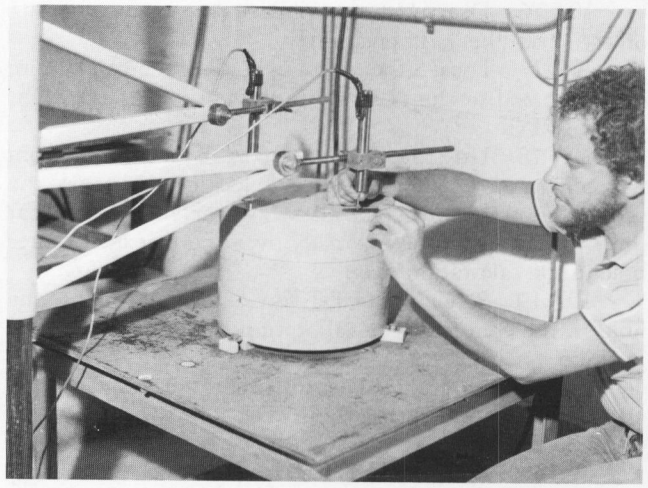

(b) Feeler gauge placement.

Figure 4. – Verifying the LVDT calibration.

10.5.1 Position LVDT No. 1 directly over the No. 6-40 UNF threaded hole on the right side of the calibration mass.

10.5.2 Place the LVDT core with extension rod attached into the LVDT body, and screw the LVDT core extension rod into the threaded hole in the calibration mass.

10.5.3 Lock the extension rod in place on the calibration mass using two locknuts.

10.5.4 Set the toggle switch on the amplifier control box to the appropriate LVDT.

10.5.5 Carefully adjust the calibration brackets and LVDT holder so that the core is in the center of the LVDT.

10.5.6 Slide the LVDT body up or down accordingly until the voltmeter reads at or near 0.0 volt.

10.5.7 Position LVDT No. 2 directly over the No. 6-40 UNF threaded hole on the left side of the calibration mass, and repeat subparagraphs 10.5.2 through 10.5.6.

10.5.8 Check the voltage output of LVDT No. 1 and readjust to 0.0 volt, if necessary.

10.5.9 Ensure that all personnel in the vicinity of the vibratory table are wearing ear protectors.

10.5.10 Ensure that the rheostat located on the control box is at the 100-percent setting.

10.5.11 Activate the vibrator by moving the on/off switch to the "on" position.

10.5.12 Check the oscilloscope trace to see that the traces are in the proper locations; i.e., right LVDT is the top trace and left LVDT is the bottom trace. If they are not in the proper locations, adjust them by turning the position knobs on the oscilloscope.

10.5.13 Lock the traces on the oscilloscope screen by pressing the appropriate controls on the oscilloscope.

10.5.14 Obtain a photograph of the oscilloscope traces for permanent record as shown on figure 5.

10.5.15 If the control box for the vibratory table is equipped with an ammeter, read and record the amperage value as shown on figure 3.

10.5.16 Deactivate the vibrator by turning the on/off switch to the "off" position.

10.5.17 Loosen the locknuts holding the LVDT core extension rod to the calibration mass on either the right or left LVDT.

10.5.18 Unscrew the LVDT core extension rod from the calibration mass, loosen the locking bolts on the calibration stand bracket, and swing the bracket so that the LVDT is positioned directly over the threaded center hole in the calibration mass.

10.5.19 Screw the LVDT core extension rod into the hole in the center of the calibration mass, and lock it in position.

10.5.20 Carefully adjust the calibration stand bracket and LVDT holder so that the LVDT core is in the center of the LVDT body.

10.5.21 Slide the LVDT body up or down accordingly until the voltmeter reads at or near 0.0 volt.

10.5.22 Repeat subparagraph 10.5.9 through 10.5.16.

10.6 Examine the oscilloscope trace photographs obtained in subparagraph 10.5.14 for the sides and center of the calibration mass.

10.7 If the sides and center oscilloscope photographs indicate the vibratory table is producing the correct amplitude values; i.e., 0.013±0.002 inch (0.33±0.05 mm), repeat subparagraphs 10.5.9 through 10.5.22 with rheostat settings of 80, 60, 40, 20, and 0.

NOTE 3.–The vibratory table is calibrated at rheostat settings less than 100 percent so that a proper rheostat setting can be determined for performing the maximum index unit weight of cohesionless soils using the wet method, as outlined in USBR 5530.

10.7.1 Return the LVDT located in the center of the calibration mass to either the right or left position from which it was moved in subparagraph 10.5.18. Repeat subparagraphs 10.5.20 and 10.5.21.

10.8 If the sides or center oscilloscope photographs indicate that the vibratory table is producing incorrect values of amplitude, the necessary repairs and/or adjustments must be made to the vibratory unit in order to obtain the correct amplitude.

RELATIVE DENSITY TABLE CALIBRATION

Location: Denver Office Geotechnical Services Branch
Date: February 22, 1989
Model: No. VP-75A Unit 2 Serial No. 601036 (Controller)

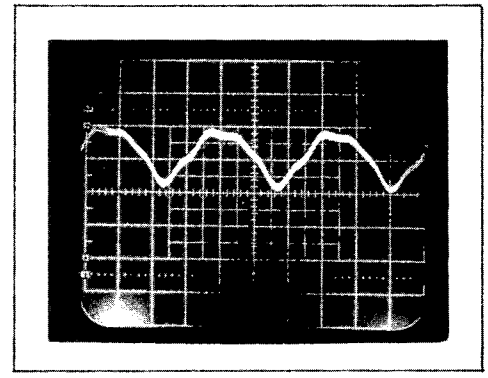

Controller Setting (%) 100 Mass on Unit: 300 AMPS: 7.2
Remarks: Center as found Photo #1

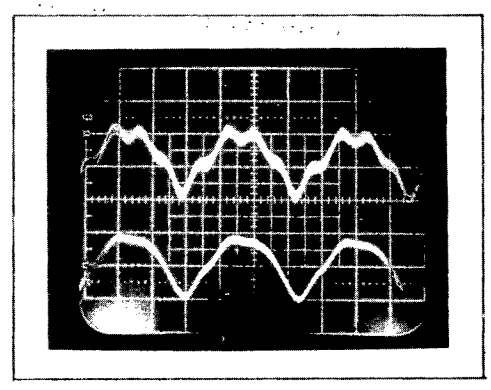

Controller Setting (%) 100 Mass on Unit: 300 AMPS: 7.2
Remarks: Left and Right as Found LT = Bottom, RT = Top Photo #2

Figure 5. – Relative density table calibration—as found oscilloscope traces.

NOTE 4.–For a new vibratory table, it is recommended that the vibratory unit be dismantled and all paint be removed from the ends of the coil springs since gradual wearing of the paint can cause changes in calibration values obtained. This should be accomplished before using the vibratory table.

10.9 *Vibrator Adjustments*:

10.9.1 Check the distance between the top of the locknut nearest the leaf spring clamp to the bottom of the leaf spring clamp, item D, figure X1.2. The distance should be approximately 7/8 inch (22 mm). If it is not, loosen the locknuts. Set the correct distance and repeat subparagraphs 10.5.9 through 10.5.16.

10.9.2 If the double amplitude values are equal to 0.013±0.002 inch (0.33±0.05 mm), proceed as per

subparagraphs 10.5.17 through 10.7; if not, additional vibrator adjustments need to be made. This may be done by further adjusting the locknuts, item B, figure X1.2.

10.9.3 Ensure that all personnel in the vicinity of the vibratory table are wearing ear protectors.

10.9.4 Ensure that the rheostat is at 100-percent setting, and turn the vibrator controller on.

10.9.5 With one person at each stud (item 9, fig. X1.2), simultaneously turn the bottom lock nuts. If the amplitude of the vibrator is too low, the bottom locknuts are to be tightened. If the amplitude of the vibrator is too high, the bottom locknuts are to be loosened. If the desired values of amplitude cannot be obtained by adjusting the bottom locknuts, it may be necessary to either tighten or loosen the top locknuts to obtain the desired values.

10.9.6 Secure the locknuts against one another when the desired amplitude values are obtained and turn the vibrator controller off.

10.9.7 Ensure that the stopnut (item 15, fig. X1.2) which holds the armature casting to the coil assembly is secure. If the stopnut needs to be replaced, it is to be replaced with a new one. Never reuse a worn stopnut.

10.10 *Check Clearance Between Pole Faces With Calibration Mass in Place* (model V-80 only, fig. X1.1, item A):

10.10.1 Obtain two strips of paper approximately 3/8 inch (10 mm) wide at least 6 inches (150 mm) long, and insert one strip between each of the pole faces of the vibrator.

10.10.2 Ensure that the rheostat is set at 100 percent and that all personnel in the vicinity are wearing ear protectors; turn the vibratory table on for about 5 seconds.

10.10.3 Turn the vibratory table off and check the paper. Markings on the paper indicate that the pole faces are making contact.

10.10.4 Adjust the vibrator in accordance with subparagaph 10.9, and repeat subparagraphs 10.10.1 through 10.10.3 until markings are not seen on the paper.

10.10.5 Repeat subparagraphs 10.10.2 through 10.10.4 inserting the second paper strip on the opposite side of the vibratory table as before.

10.10.6 Examine the oscilloscope trace. If the amplitude is not correct, follow the manufacturer's instruction for inserting shims between the vibration dampener and the core mounting assembly (items 14 and C, fig. X1.1).

10.10.7 Repeat the procedure as outlined in subparagraphs 10.5.9 through 10.5.22, and label the photographs as shown on figure 6.

10.11 *Check the Air Gap* (model V-75 only, item A, fig. X1.2):

NOTE: 5.-If the control box for the vibratory table is equipped with an ammeter, the air gap for the V-75 is to be checked in accordance with subparagraph 10.11. If the control box is not equipped with an ammeter, the air gap can be checked as per subparagraph 10.10.

10.11.1 With the 300-lbm (136-kg) mass in place, ensure that the rheostat is set at 100 percent and that

RELATIVE DENSITY TABLE CALIBRATION

Location: Denver Office Geotechnical Services Branch
Date: February 22, 1989
Model: No. VP-75A Unit 2 Serial No. 601036 (Controller)

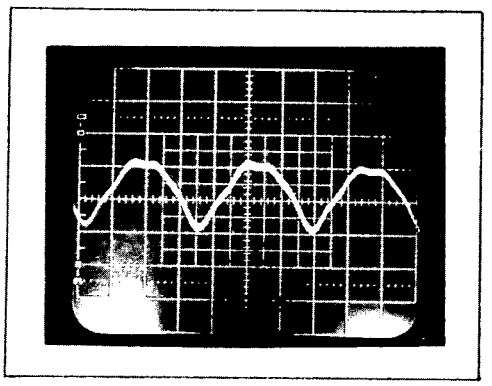

Controller Setting (%) 100 Mass on Unit: 300 AMPS: 7.4
Remarks: After adj. recommended setting for 1/2 ft³ measure
Photo #3 Center

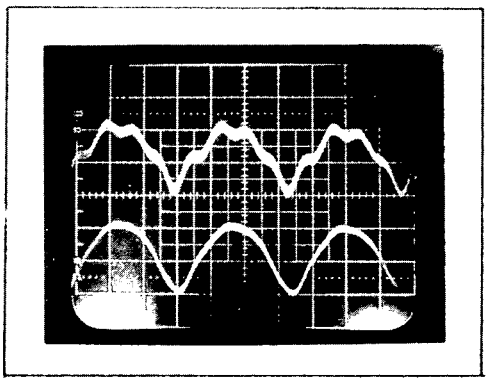

Controller Setting (%) 100 Mass on Unit: 300 AMPS: 7.4
Remarks: After adj. recommended setting for 1/2 ft³ measure
Photo #4 Lt = Bottom, RT = Top

Figure 6. - Relative density table calibration — after adjusting oscilloscope traces.

all personnel in the vicinity of the vibratory table are wearing ear protectors; turn the vibrator on.

10.11.2 Read the amperage value and compare the value obtained with the rated value for the vibrator; i.e., a table rated for 230 volts a.c., 8 amps, will draw approximately 7 amps when it is properly adjusted.

10.11.3 Repeat the procedure outlined in subparagraphs 10.9.4 through 10.9.7 if the amperage value obtained in subparagraph 10.11.2 is incorrect.

10.11.4 Loosen the locknuts holding the LVDT core extension rods to the calibration mass, and unscrew the rods from the mass.

10.11.5 Move the adjustable stand as required, and remove the 300-lbm (136-kg) calibration masses from the table deck.

10.12 *Calibration Using the 95-lbm Calibration Mass*:

10.12.1 Place the 95-lbm (43-kg) calibration mass on the vibratory table.

10.12.2 Align the boltdown tabs with the appropriate mounting holes in the table top; be sure that the front mark on the mass is to the front of the table.

10.12.3 Secure the calibation mass to the table using three 3/8-inch-diameter bolts having a minimum length of 1-1/4-inches. Use washers if necessary.

10.12.4 To measure the double amplitude of the vibratory table with the 95-lbm calibration mass, repeat subparagraphs 10.3.8 through 10.3.11 and 10.5.1 through 10.5.22.

10.12.5 Examine the oscilloscope trace photographs obtained in subparagraph 10.5.14.

10.12.6 If the sides and center oscilloscope photographs indicate the vibratory table is producing the correct amplitude values; i.e., 0.013±0.002 inch (0.33±0.05 mm), repeat subparagraphs 10.5.9 through 10.5.22 with rheostat settings of 80, 60, 40, 20, and 0.

10.12.7 If the double amplitude exceed the prescribed value, the rheostat is to be adjusted until the correct double amplitude value is obtained.

10.12.8 Turn on the vibratory table with the rheostat set at 100 percent.

10.12.9 Slowly turn the rheostat counterclockwise, and monitor the oscilloscope until the correct value of amplitude is obtained.

10.12.10 Obtain a photograph of oscilloscope trace, and record the recommended rheostat setting that is required in order to obtain the correct double amplitude.

10.12.11 Turn off the vibratory table.

10.12.12 After determining the recommended setting for the vibratory table, it is recommended that the air gap be checked at this setting as prescribed in either subparagraph 10.10 or 10.11, whichever is appropriate.

10.12.13 Loosen the locknuts holding the LVDT core extension rods to the calibration mass, and unscrew the rods from the mass.

10.12.14 Move the adjustable stand as required, and remove the 95-lbm mass from the table deck.

10.12.15 Disconnect all electronic equipment, and carefully store the calibration masses in a suitable container.

11. Interpretation of Results

11.1 If the vibratory table fails to produce the required double amplitude as specified in this procedure, it should either be repaired or rejected.

11.2 Under no circumstances should the vibratory table be operated with a power source which provides 5 percent less than, or 10 percent greater than (approximately), the rated power requirements of the vibratory table. If the power source is insufficient, it is recommended that a step-up transformer be installed to obtain the desired voltage.

12. Report

12.1 The report is to consist of a completed and checked "Vibratory Table Calibration Sheet" (fig. 3) along with the photographs obtained at each rheostat setting.

12.2 See appendix X1 for sketches of vibratory table component parts.

12.3 See appendix X2 for drawings of vibratory table calibration equipment.

ANNEX A1. INSTALLATION AND MAINTENANCE OF VIBRATORY TABLES

A1.1 Scope

A1.1.1 Annex A1 outlines procedures for recommended installation and maintenance of FMC Corporation, Syntron electromagnetic vibratory tables, models VP-80 and VP-75A. These tables are used for determining the maximum index unit weight of cohesionless, free-draining soils.

A1.2 Installation

A1.2.1 The vibratory unit is designed for a specific line voltage and frequency. The power supply voltage and frequency must match the information stamped on the equipment name plate. If the power supply voltage is 5 percent less than, or 10 percent greater than (approximately) the rated voltage, installation of a transformer is required for proper operation.

A1.2.2 The nominal dimensions of the steel deck of the table should be 3/8 inch (10 mm) thick and 30 by 30 inches (760 by 760 mm).

A1.2.3 Verify that bolt holes, used to attach calibration masses to the steel deck, are drilled in the correct locations and that they are tapped to receive 3/8-inch NC bolts.

A1.2.4 Vibratory tables are extremely noisy during operation. If possible, select a site where the table can be isolated from personnel working in the immediate area. Some tables have been isolated by constructing a soundproof covering around the table. If such a cover is used, it must be easily removed or disassembled to calibrate the table.

A1.2.5 Select a site in the laboratory suitable for mounting the vibratory table. This site must be on a concrete slab in a protected area and close to the power supply. When selecting the site, allow about a 16-inch (400-mm) clearance between the back of the table and the wall and allow at least 3 feet (1 meter) clearance on either side. The front of the table (usually identified by the equipment name tag) should face open space in the laboratory. Position the vibratory table so that the power cord comes out of the back of the vibratory adjacent to the wall.

A1.2.6 Obtain four wood shims made of 2- by 4-inch lumber. Each shim should have a length of about 12 inches (300 mm). Place one shim under each side of the bottom portion of the table frame, with the smaller dimension of the shim in the vertical direction. The purpose of these shims is to relieve the weight the table may exert on the mounts while the anchor holes are marked and the table is fastened to the floor. If this precaution is not taken, undue stress will be placed on the mounts which could cause them to fail prematurely.

A1.2.7 Mark the anchor hole locations (2 per mount), then remove the table and determine the size of the hole that must be drilled in the concrete. The size of the hole required depends on the size and model of the lead anchor.

A1.2.8 Obtain a suitable masonry bit and power drill. A power drill, which drills by impact as well as rotation, usually works better than one that drills only by rotation.

A1.2.9 Drill each hole to the recommended depth. If the hole is drilled deeper than the recommended depth, the lead anchor will pull out when the bolt is inserted and tightened. A lead anchor, threaded for a minimum 3/8-inch-diameter bolt, is recommended. It is also recommended that threaded anchors be used instead of lag bolt anchors, since the latter sometimes strip when the lag bolt is tightened. Clean all of the dust out of each hole. Insert one lead anchor into each hole. If the lead anchor is the type that must be set by use of a drive tool, follow the manufacturer's recommendation for the correct setting procedure.

A1.2.10 Relocate the vibratory table directly over the mounting holes. Place the 2- by 4-inch shims under the bottom frame of the vibratory table. Insert the appropriate sized bolts into the holes on the mounts, and tighten each bolt 3 to 4 turns; then remove the 2- by 4-inch shims and allow the weight of the table to rest on the mounts. Tighten all bolts securely.

A1.2.11 The controller should be installed as close to the table as possible, preferably on the wall in a clean, dry location, free from excessive heat and vibration. The controller should be located where it may be easily seen and is accessible to the operator, approximately 4 to 5 feet (1.2 to 1.5 m) above the floor.

A1.2.12 Wire the vibrator to the controller and the controller to the power supply. The wiring connections must be securely made in accordance with the wiring diagram included in each control box. A ground connection to the controller and table is required to ensure maximum safety to the operator. Wiring should be connected by a qualified electrician.

A1.3 Maintenance of the Vibratory Table

A1.3.1 Dry the vibratory unit with compressed air after wet use and occasionally lubricate the leaf and coil springs with WD-40 or a similar rust preventive product; this keeps the components from rusting, thereby keeping the vibrator moving freely.

A1.3.2 Plug all holes on the table that are not in use with appropriate size bolts; this prevents water from running into the holes and down into the vibrator.

A1.3.3 Periodically clean the attaching holes for the maximum index unit weight measures that are located on the deck of the table.

A1.3.4 Repairing the stripped holes in the table top can be accomplished by using a Helicoil™ thread replacement device. The Helicoil™ set can be purchased at most hardware and automotive repair centers.

A1.3.5 Periodically check the vibratory table for broken or weathered top and bottom mounts.

A1.3.6 Periodically check the electrical wiring for frayed, cracked, or broken insulation.

A1.3.7 Periodically check the vibratory table for loose lock nuts, broken leaf springs, etc.

A1.3.6 Periodically check the electrical wiring for frayed, cracked, or broken insulation.

A1.3.7 Periodically check the vibratory table for loose lock nuts, broken leaf springs, etc.

CAUTION: Do not attempt repairs unless the unit can be recalibrated before use, since adjustment will be required.

APPENDIX X1

VIBRATORY TABLE COMPONENT PARTS

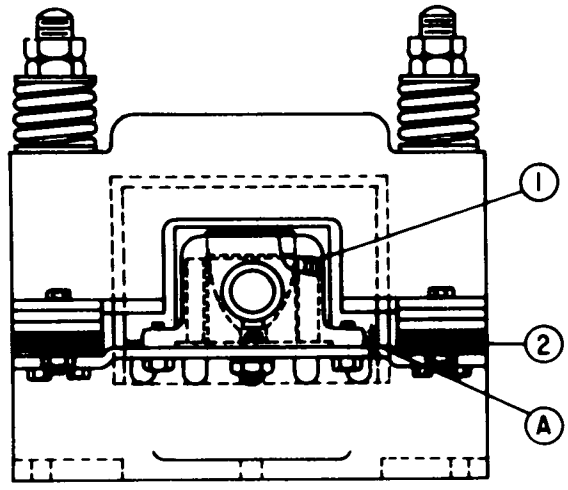

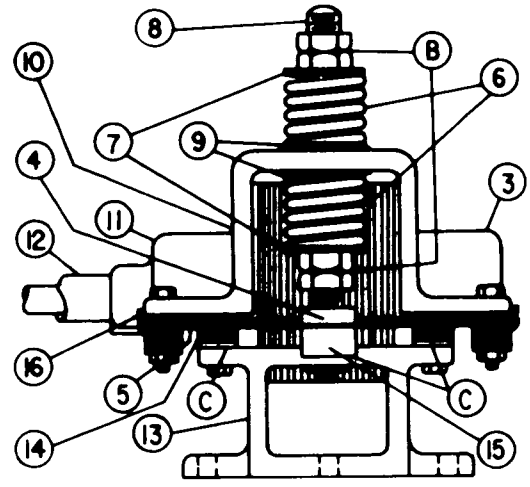

Item	Description
1	Coil rubber
2	Rubber transverse spring spacer
3	Coil cover (plain)
4	Spring clamp (center)
5	Leaf springs
6	Coil springs
7	Spring seats (outer)
8	Stud
9	Spring seats (inner)
10	Armature mounting assembly

Item	Description
11	Coil cover (cable support side)
12	Cable strain relief
13	Core mounting assembly
14	Vibration dampener
15	Leaf spring spacer (center)
16	Leaf spring spacer (end)
A	Clearance between pole faces
B	Lock nuts
C	Location of shims

Figure X1.1. – Vibratory table component parts (model No. V-80).

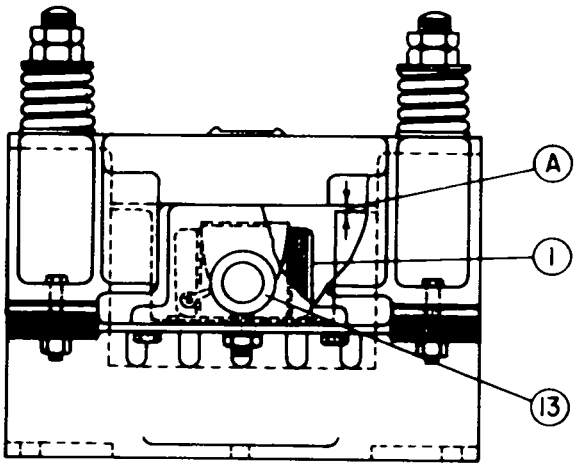

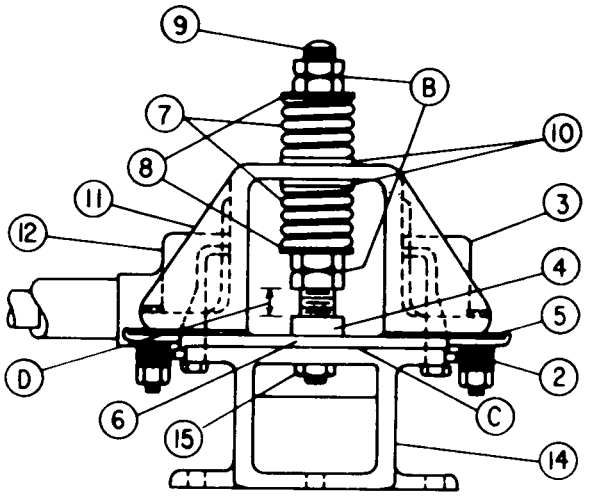

Item	Description
1	Coil assembly
2	Rubber transverse spring
3	Coil cover (plain)
4	Leaf spring clamp
5	Leaf spring
6	Striking plate assembly
7	Coil spring
8	Outside spring seat
9	Stud

Item	Description
10	Inside spring seat
11	Armature costing
12	Coil cover (cable side)
13	Cable bushing
14	Core assembly
15	Stop nut (5/8 inch-11)
A	Air gap
B	Lock nuts
C	Location of shim
D	Lock nuts/leaf spring clamp gap

Figure X1.2. - Vibratory table component parts (model No. V-75).

APPENDIX X2

VIBRATORY TABLE CALIBRATION EQUIPMENT

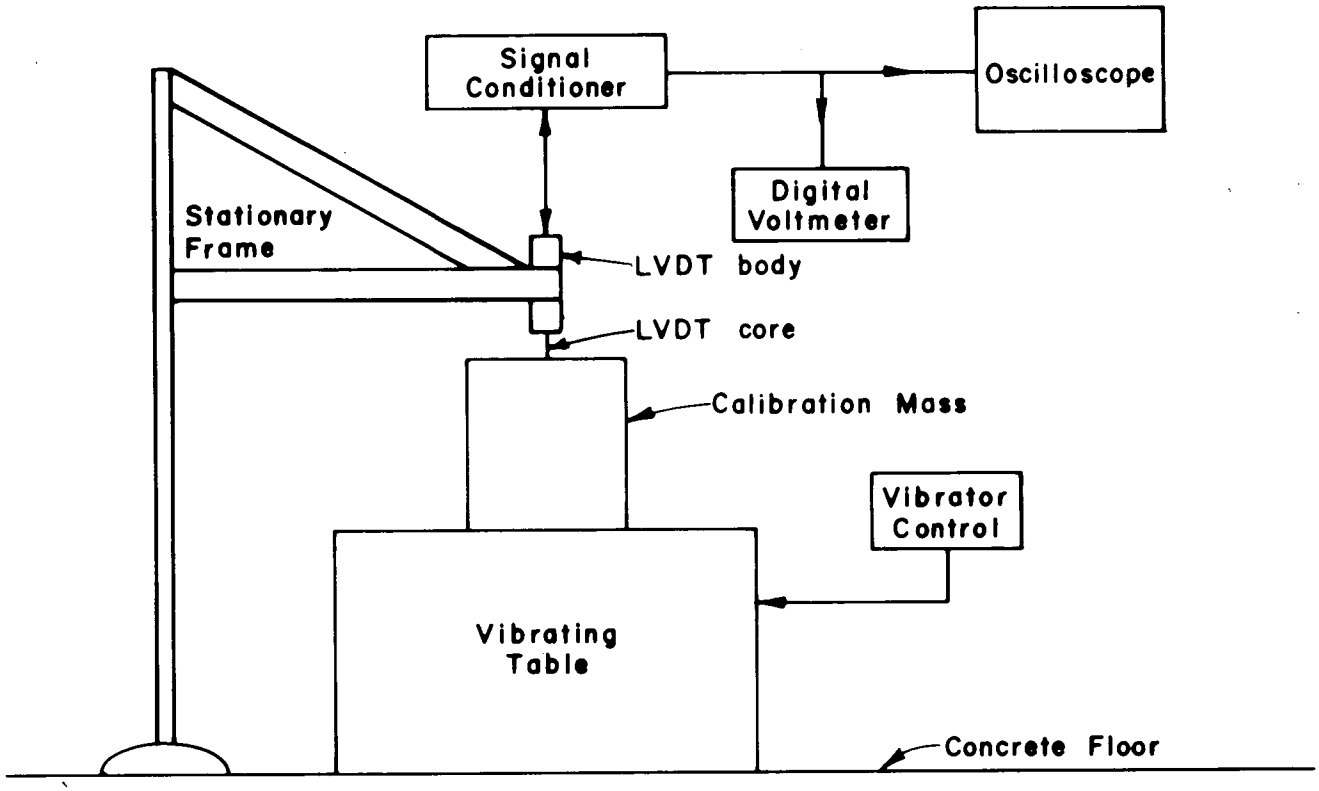

Figure X2.1 – Vibratory table calibration equipment — schematic.

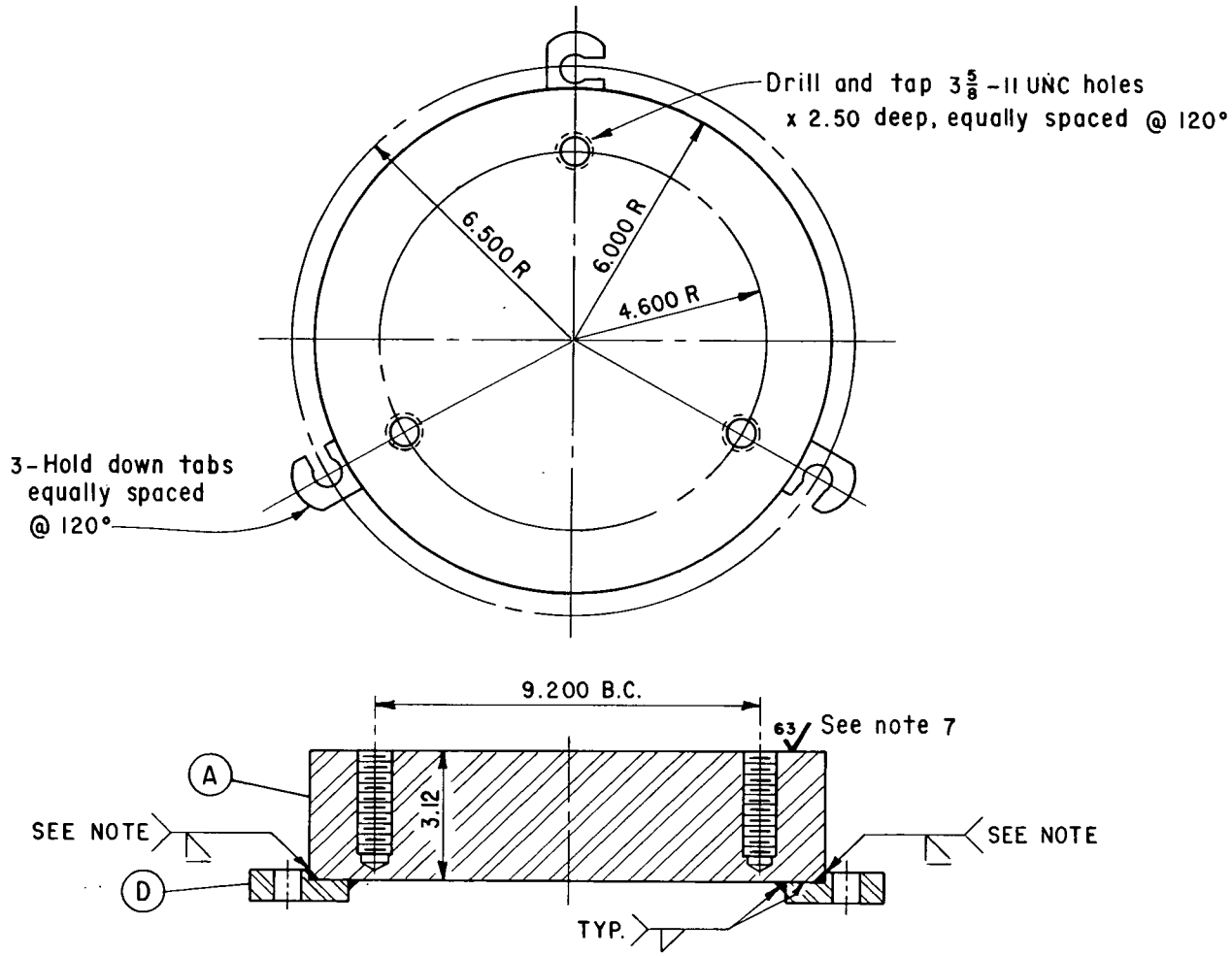

PART A – BOTTOM MASS
ONE REQ'D

SHOP NOTES

NOTE: Manufacture these parts in the following sequence:
1. Manufacture Hold Down Tabs Part D.
2. Obtain 6 cap screws.
3. Manufacture Bottom Mass Part A welding of Tabs Part D.
4. Manufacture Center Mass Part B.
5. Obtain the mass of the bottom Mass Part A and Center Mass Part B; include 3 cap screws.
6. Subtract the mass obtained in No.5 from 300# this will be the mass required for the Top Mass Part C including the additional 3 cap screws.
7. Surface texture 63 flat and parallel to adjoining surfaces.

NOTE: Prior to welding the Hold Down Tabs to the Calibration Mass, bevel edge of Hold Down Tabs and grind or machine excess weld spatter so that the weld is flush with the outside of Calibration Mass.

All material manufactured from cold rolled steel.

NOTE

All dimensions are in inches unless otherwise shown.

Figure X2.2. – Vibratory table calibration equipment. 101-D-647

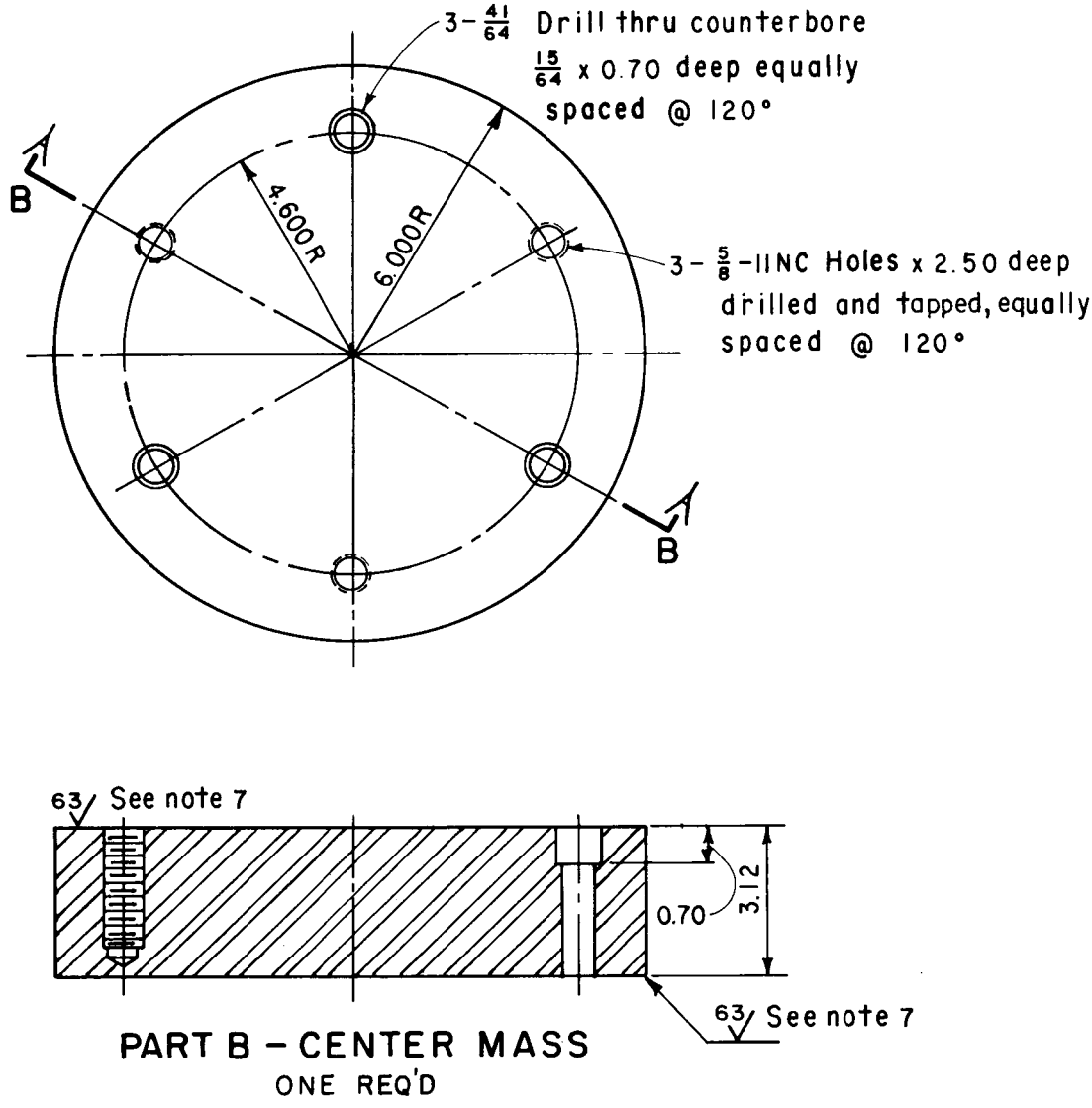

Figure X2.2. - Vibratory table calibration equipment — Continued. 101-D-647

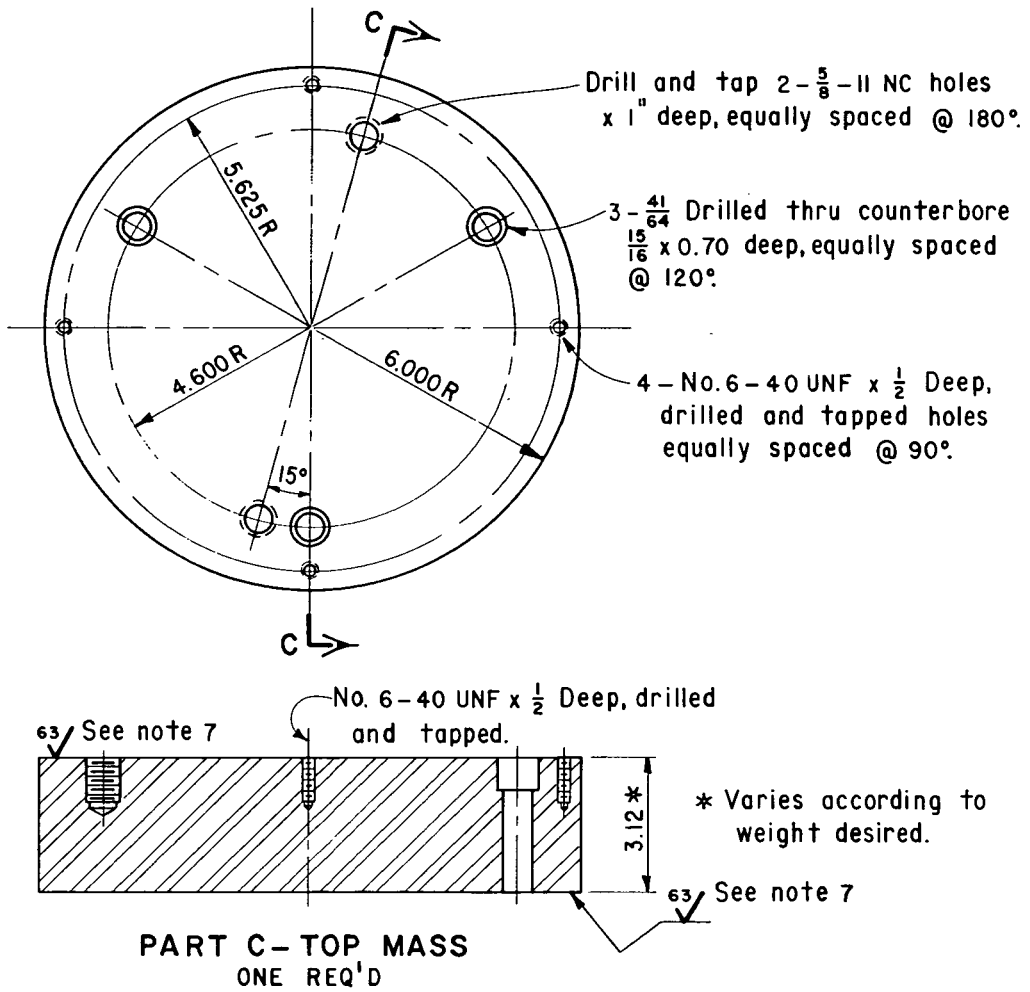

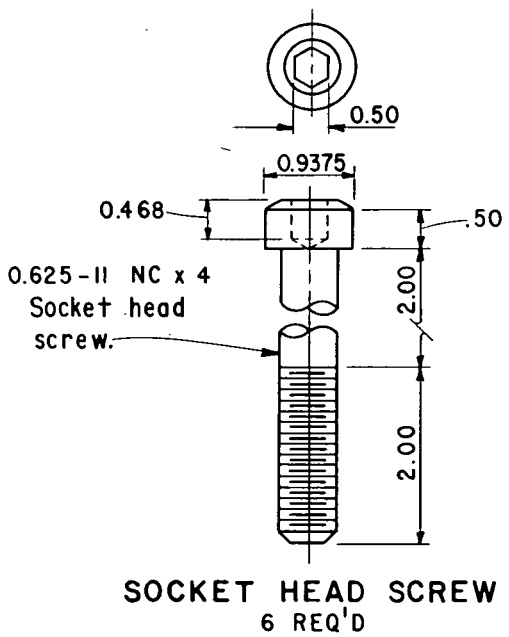

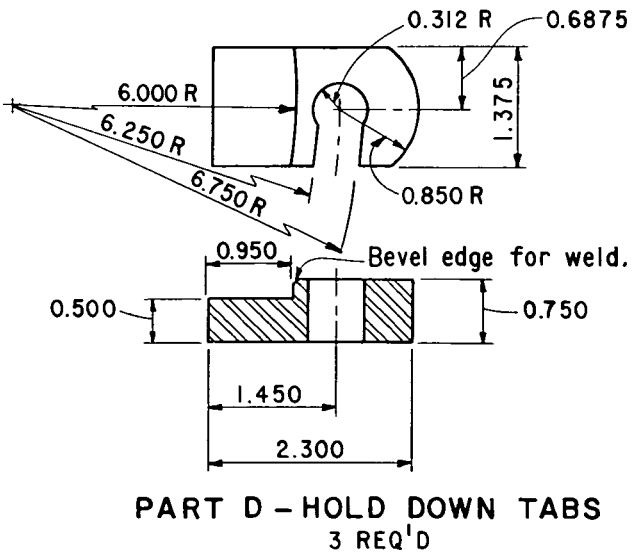

Figure X2.2. - Vibratory table calibration equipment — Continued. 101-D-647

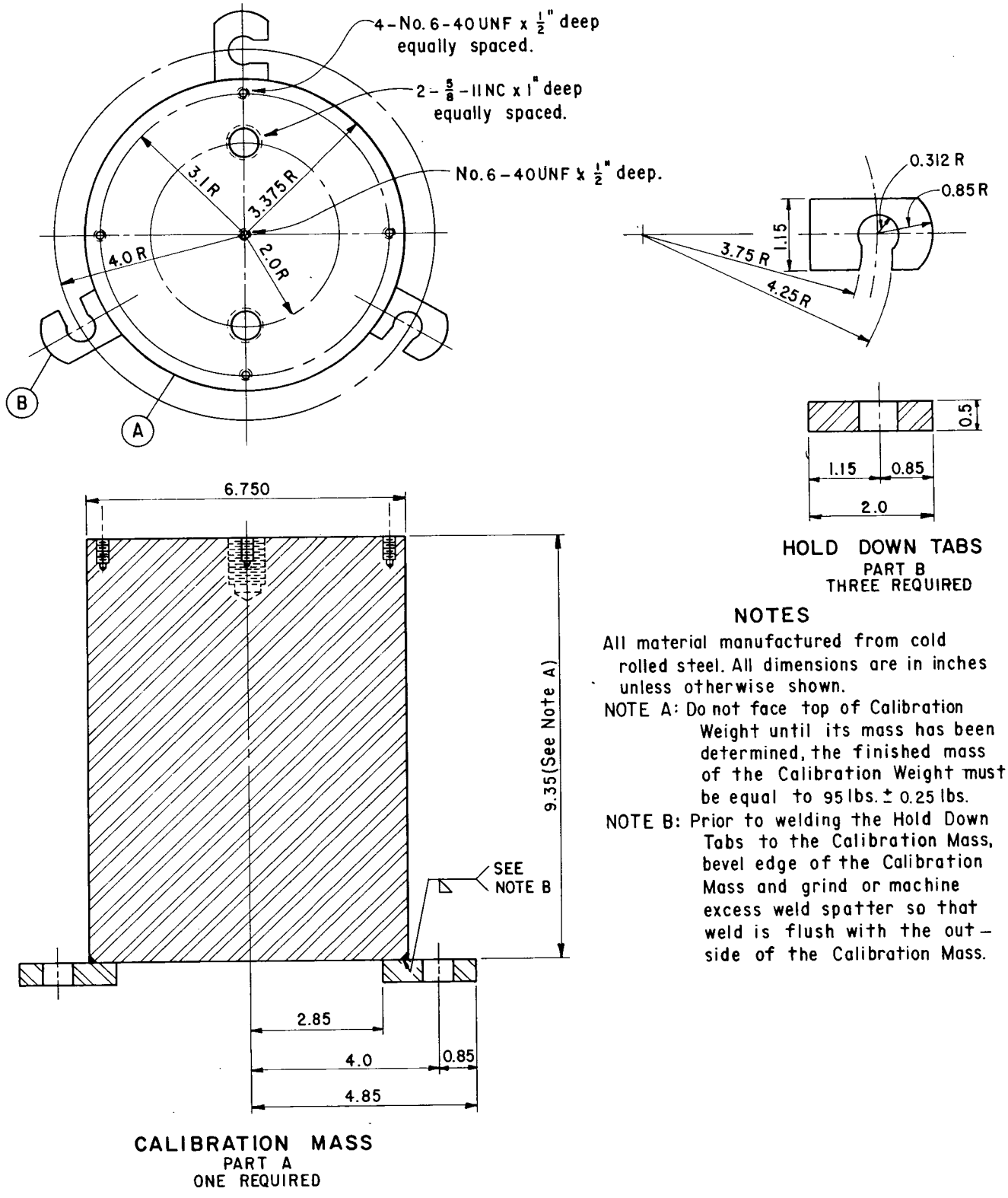

NOTES

All material manufactured from cold rolled steel. All dimensions are in inches unless otherwise shown.

NOTE A: Do not face top of Calibration Weight until its mass has been determined, the finished mass of the Calibration Weight must be equal to 95 lbs. ± 0.25 lbs.

NOTE B: Prior to welding the Hold Down Tabs to the Calibration Mass, bevel edge of the Calibration Mass and grind or machine excess weld spatter so that weld is flush with the outside of the Calibration Mass.

Figure X2.2. – Vibratory table calibration equipment. 101-D-648

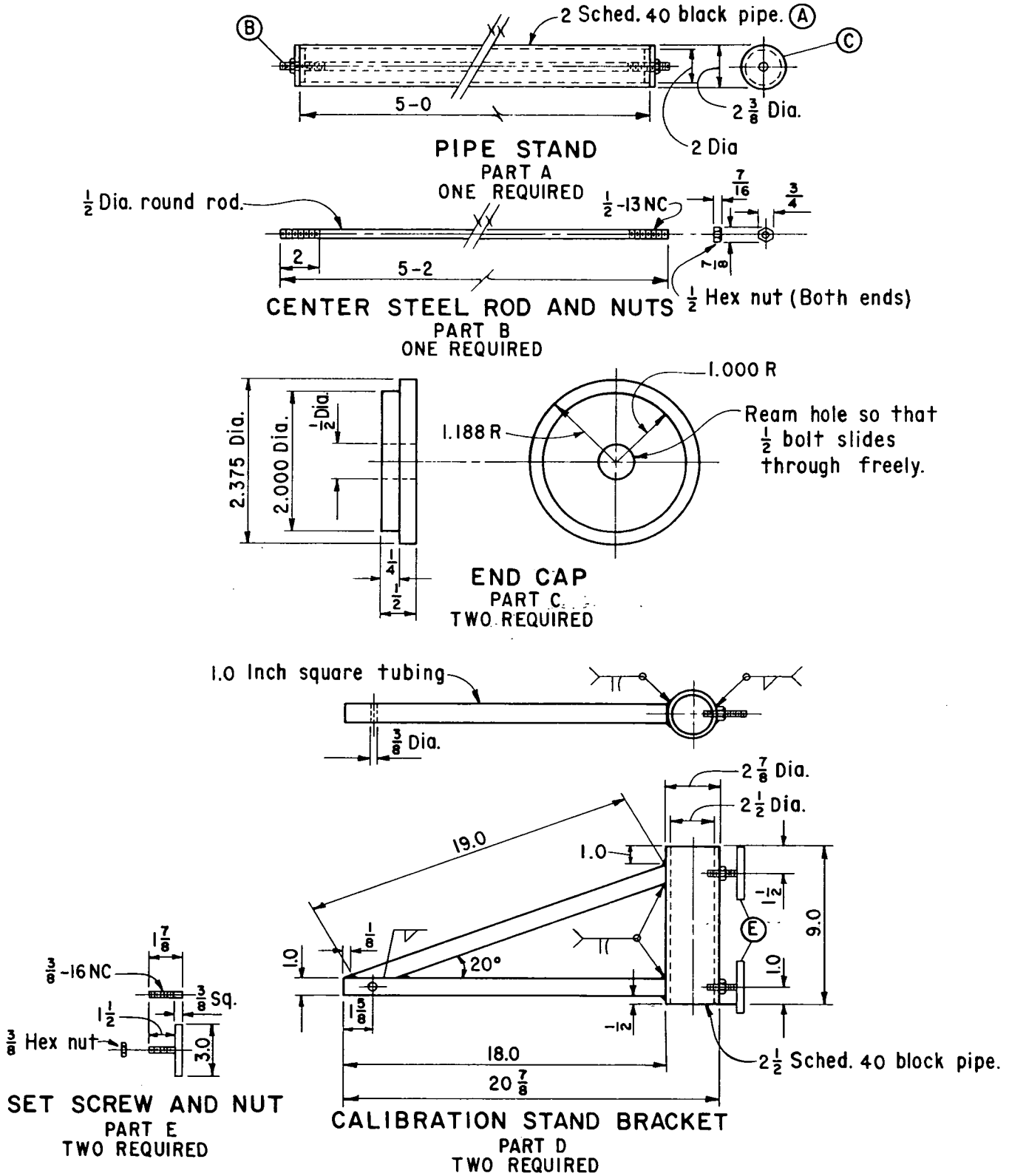

Figure X2.2. - Vibratory table calibration equipment — 101-D-649

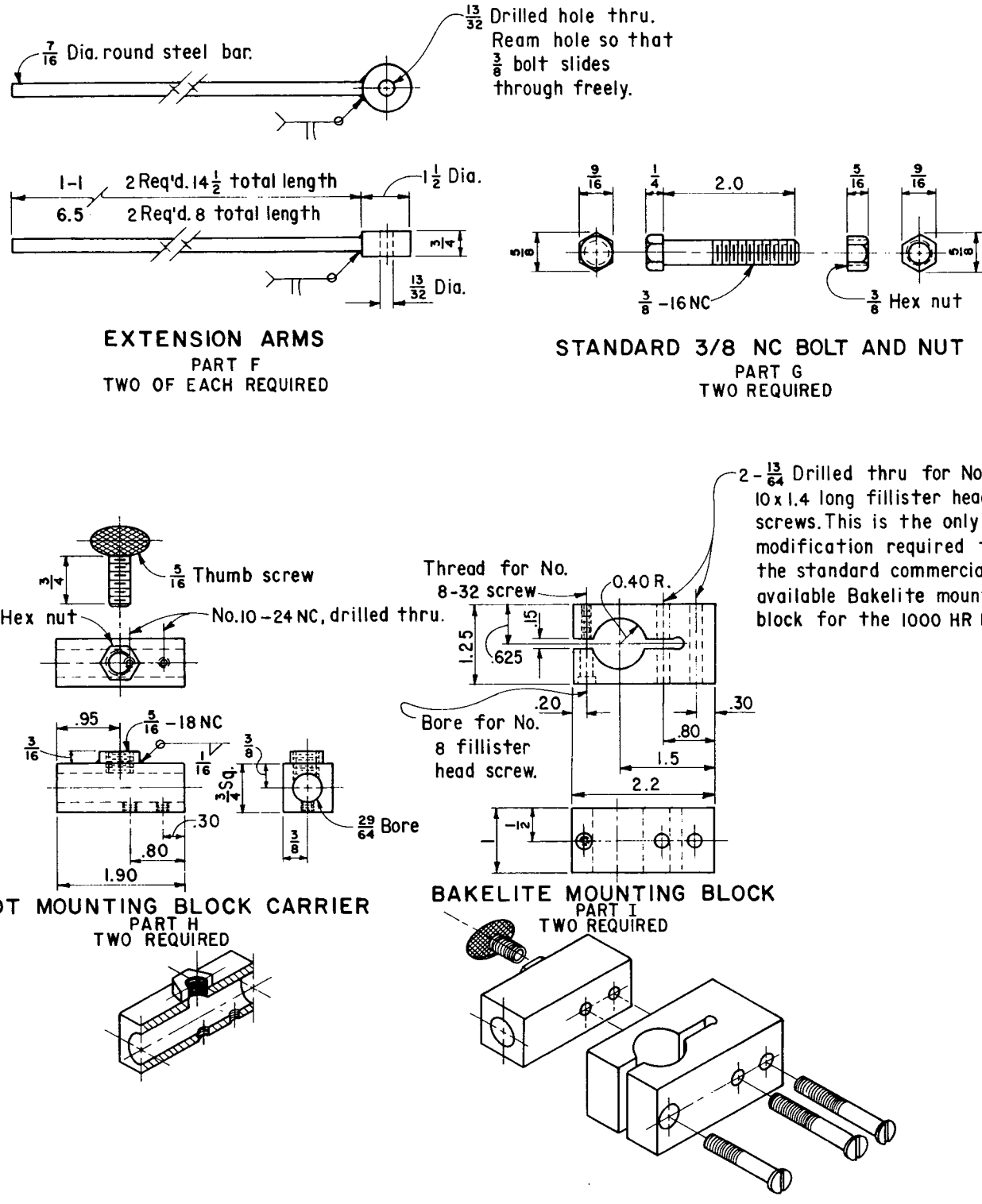

Figure X2.2. – Vibratory table calibration equipment — Continued. 101-D-649

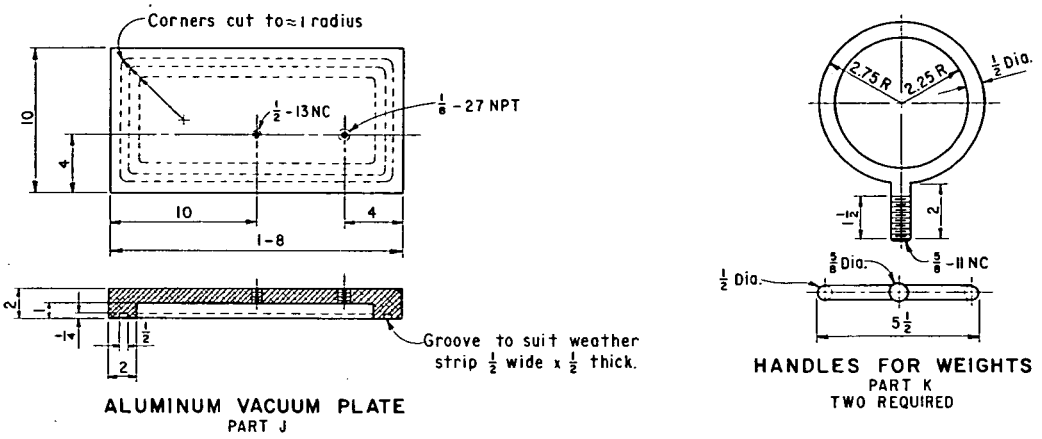

Figure X2.2. – Vibratory table calibration equipment. — Continued. 101-D-649

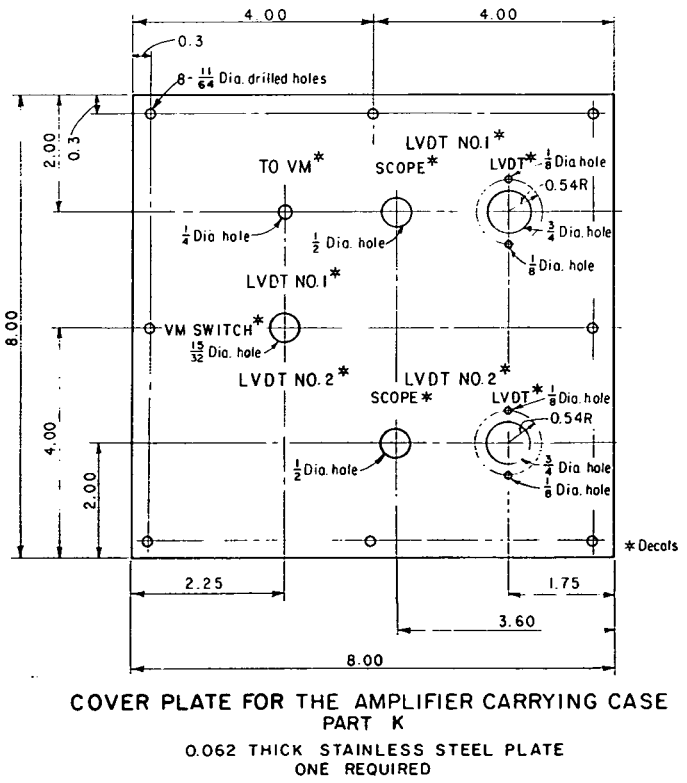

Figure X2.2. – Vibratory table calibration equipment. 101-D-650

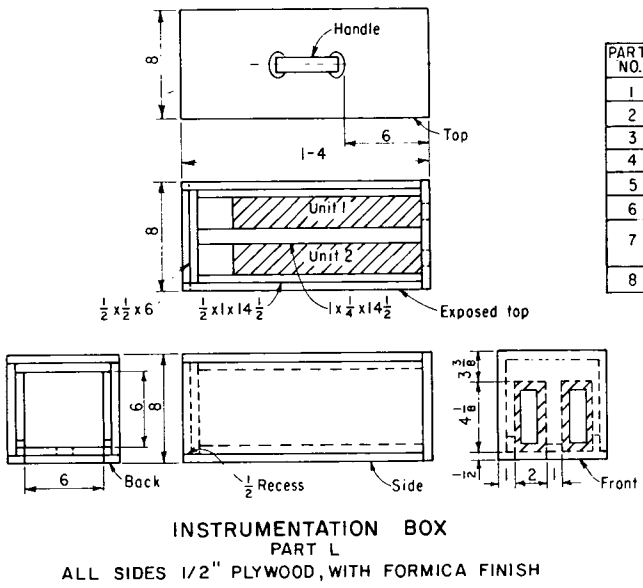

PARTS LIST

PART NO.	DESCRIPTION	NO. REQ'D
1	Signal conditioners CAS025 mfg. Schoevitz Engr.	2
2	LVDTS Model 1000 HR mfg. Schaevitz Engr.	2
3	Straight female plug type A5F (Switchcraft)	2
4	Male panel socket type D5M (Switchcraft)	2
5	Phono jack plug type 3501FP (Switchcraft)	1
6	Phono jack plug type 3502 (Switchcraft)	1
7	BNC Bulkhead receptical rear mount type P/N (amphenol connector)	2
8	Toggle switch DPDT C&K Eldorado type 7201P3YZQ	1

Figure X2.2. – Vibratory table calibration equipment — Continued. 101-D-650

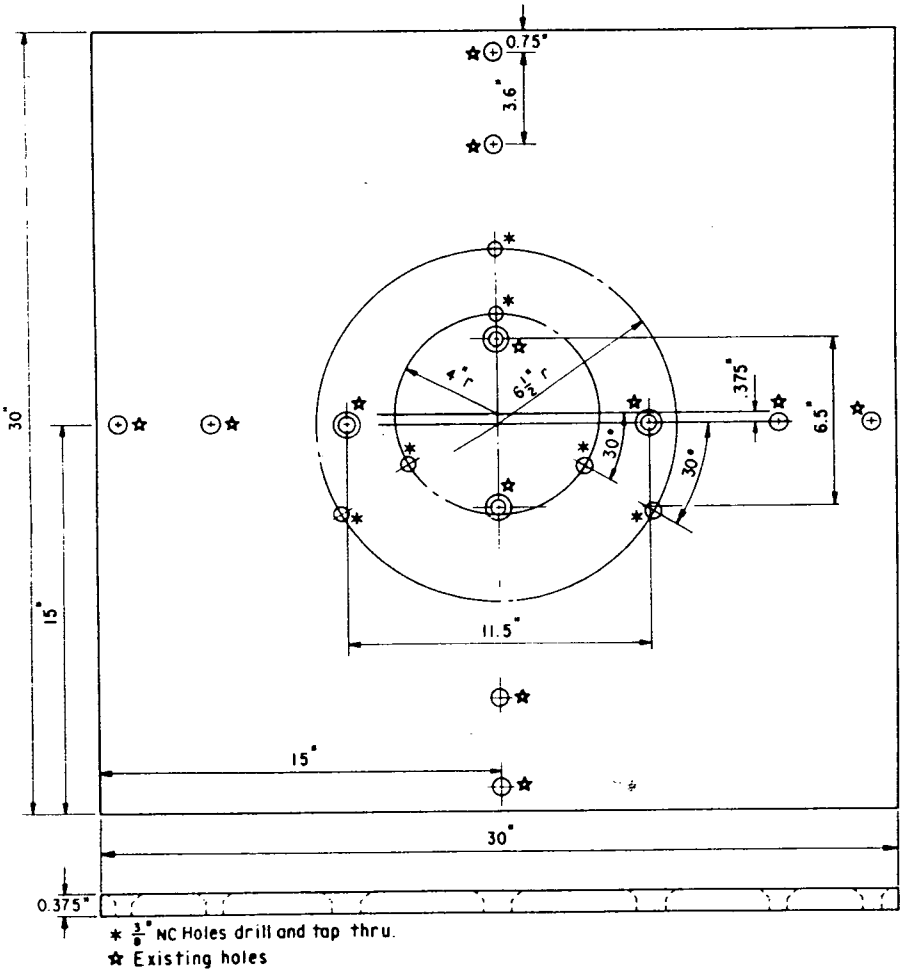

Figure X2.3. – Mounting hole locations.

UNITED STATES DEPARTMENT OF THE INTERIOR
BUREAU OF RECLAMATION

USBR 1445-89

PROCEDURE FOR

CALIBRATING THE TORVANE SHEAR DEVICE (POCKET VANE SHEAR METER)

INTRODUCTION

This procedure is under the jurisdiction of the Geotechnical Services Branch, code D-3760, Research and Laboratory Services Division, Denver Office, Denver, Colorado. The procedure is issued under the fixed designation USBR 1445. The number immediately following the designation indicates the year of acceptance or the year of last revision.

1. Scope

1.1 This designation outlines procedures for calibrating the Torvane device used in performing small vane shear testing of soil in accordance with USBR 5770.

1.2 This calibration procedure is used to determine correction values to be applied to Torvane readings obtained during testing.

2. Applicable Documents

2.1 *USBR Procedures*:

USBR 1000 Standards for Linear Measurement Devices
USBR 3900 Standard Definition of Terms and Symbols Relating to Soil Mechanics
USBR 5770 Performing Torvane (Pocket Vane Shear Meter) Testing of Soils

3. Summary of Method

3.1 Calibrated precision mass standards are hung from a Torvane meter calibration wheel. The Torvane reading obtained is compared to an equivalent calculated undrained shear strength value. This procedure is repeated at mass intervals over the entire range of the Torvane device, and a calibration curve is obtained.

4. Significance and Use

4.1 A calibration curve must be calculated for each individual Torvane to determine the undrained shear strength of soils by Torvane testing.

4.2 The calibration curve obtained using this procedure is unique to a given Torvane and to the vane used. If the Torvane or the vane is repaired or replaced, this calibration procedure must be repeated.

4.3 This calibration procedure is to be performed upon receipt of the Torvane and annually thereafter, or in the event of any change in the vane or Torvane used.

5. Apparatus

5.1 *Torvane.*–A small vane shear meter, as shown on figure 1, capable of measuring undrained shear strength from 0 to 1.0 ton/ft^2. The Torvane dial should be marked with major divisions of 0.05 ton/ft^2 for permitting visual interpolation to the nearest 0.01 ton/ft^2.

NOTE 1.–The following table should be used as a guide for selecting the appropriate vane adaptor.

Table 1. – Torvane adapters

Undrained shear strength ton/ft^2	Adaptor diameter in	Vane height in
0 to 0.2	1.875	0.210
0 to 2.5	0.75	0.135

5.2 *Torvane Vise.*–A vise used to hold the Torvane in a horizontal position during calibration. The vise is shown on figures 2a and 3a.

5.3 *Calibration Wheel.*–A wheel which is attached to the end of the Torvane and is used to support the precision mass standards during calibration. A calibration wheel is shown on figures 2b and 3b.

5.4 *Calibration Masses.*–A set of calibrated masses which are used to apply torque to the Torvane. Masses are used to cause dial readings of approximately one-third, two-thirds, and full range.

6. Precautions

6.1 *Safety Precautions.*–Handle the Torvane carefully to avoid possible injury resulting from the sharp edges of the vanes.

6.2 *Technical Precautions*:

6.2.1 Use extreme care when marking control numbers on the Torvane. Do not scribe on the vanes or on the dial head.

6.2.2 Store the Torvane and spare vanes in a suitable box or case when not in use to avoid damage to the meter and/or vanes.

7. Calibration and Standardization

7.1 Verify the calipers and precision mass standards are currently calibrated in accordance with USBR 1000.

(a) Top view.

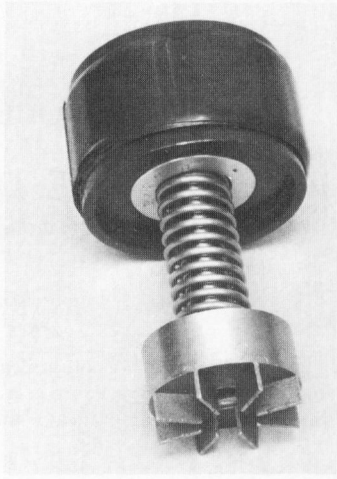

(b) Side view. Note vane at bottom.

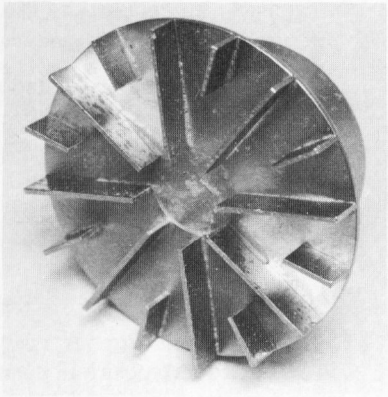

(c) Adaptor: 0 to 0.2 ton/ft^2.

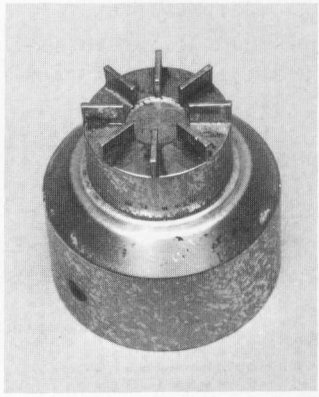

(d) Adaptor: 0 to 2.5 ton/ft^2.

Figure 1. – Torvane (pocket vane shear meter) equipment.

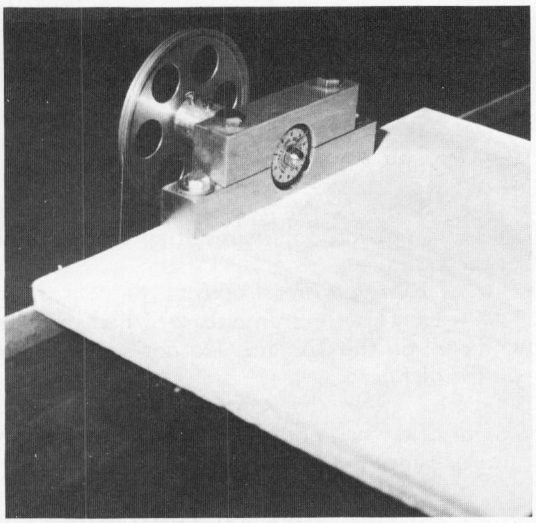

(a) Torvane, hub, and calibration wheel clamped in Torvane vise.

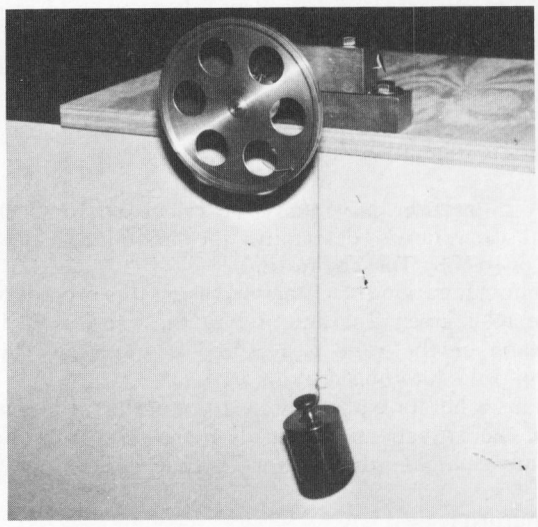

(b) Mass hung from Torvane calibration wheel.

Figure 2. – Torvane calibration assembly.

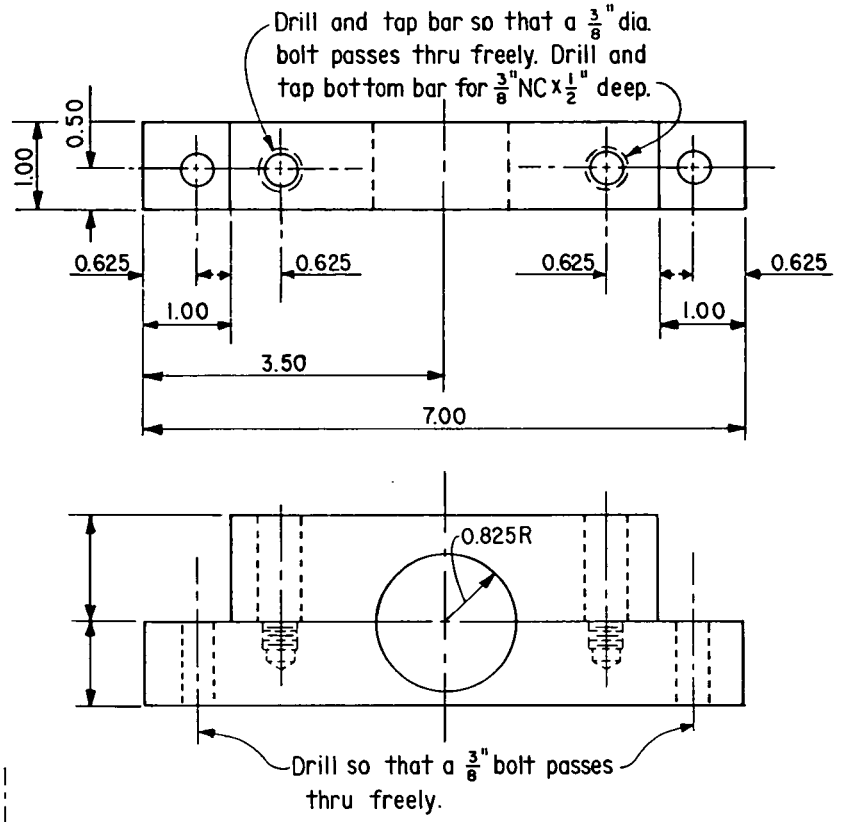

(a) Torvane vise.

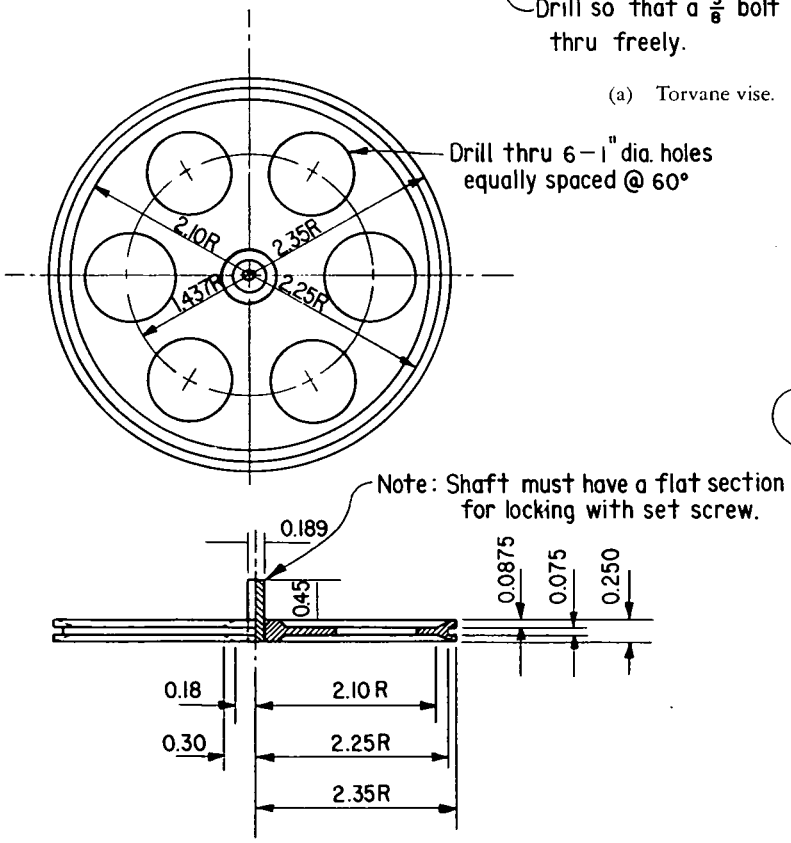

(b) Torvane calibration wheel.

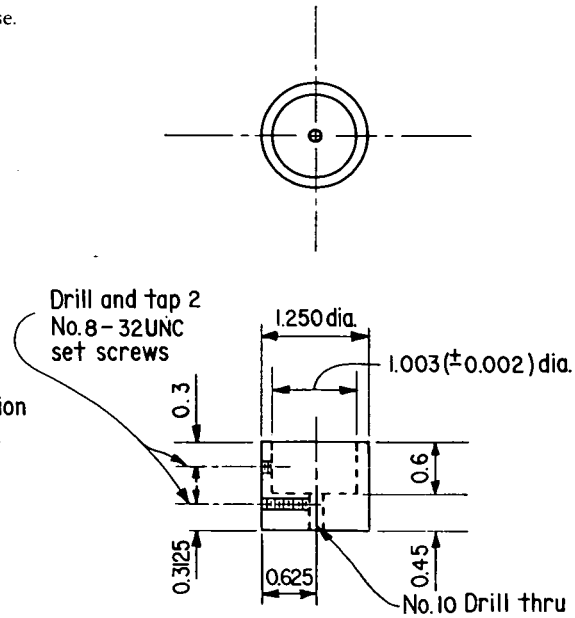

(c) Hub for Torvane calibration wheel.

Figure 3. – Torvane calibration assembly.

If the calibrations are not current, perform the calibrations before using either the calipers or precision mass standards for this calibration procedure.

8. Conditioning

8.1 The Torvane and calibration masses should be placed in the environment in which they are to be calibrated for at least 24 hours before calibration.

9. Procedure

9.1 All data are to be recorded on the "Torvane Shear Device (Pocket Vane Shear Meter)" form as shown on figure 4.

9.2 Determine and record the radius and height of the vanes to the nearest 0.001 inch (0.025 mm) using a micrometer caliper.

9.3 Clamp or bolt the bottom of the calibration assembly to the edge of a suitable table or bench as shown on figure 2.

9.4 Attach the calibration wheel to the Torvane using the hub.

9.5 Clamp the Torvane, hub, and calibration wheel assembly into the vise (fig. 2a).

9.6 Calculate the mass required to apply a torque which causes about one-third revolution of the Torvane dial.

9.7 Suspend the mass on the end of the cord (fig. 2b). Reposition the calibration wheel until the mass hangs tangent to the wheel and perpendicular to the floor.

9.8 Read and record the Torvane dial reading to the nearest 0.01 ton/ft^2.

9.9 Repeat subparagraphs 9.7 and 9.8 with appropriate masses required to apply torque which causes approximately two-thirds and one revolution of the Torvane dial.

9.10 Calculate the equivalent undrained shear strength resulting from each mass applied using the expression given in subparagraph 10.2; record each value as shown on figure 4.

9.11 Determine the difference between the equivalent undrained shear strength values obtained in subparagraph 9.10 and the Torvane dial readings obtained in subparagraph 9.8.

9.12 The difference between the equivalent undrained shear strength and the Torvane dial readings should be less than 0.05 ton/ft^2 for each mass standard used. If this value is exceeded, a Torvane correction curve is to be prepared. An example correction curve is shown on figure 5 (see par. 11).

9.13 Repeat subparagraphs 9.5 through 9.11 a minimum of two times if a new Torvane is being calibrated.

10. Calculations

10.1 Compute the torque, T, applied to the Torvane.

$$T = fr \tag{1}$$

where:
T = torque, in·lbf
f = force, lbf
r = radius of the calibration wheel, in

10.2 Calculate the equivalent undrained shear strength.

$$S = \frac{T}{\pi R^2 \left(2H + \frac{2R}{3}\right)} \tag{2}$$

where:
S = undrained shear strength, lbf/in^2
T = torque, in·lbf
R = radius of vane, in
H = height or depth of vane, in

NOTE 2.–See appendix X1 for derivation of this relation.

11. Interpretation of Results

11.1 The difference between the equivalent undrained shear strength and the reading on the Torvane should be less than 0.05 ton/ft^2. If this value is exceeded, a Torvane reading correction curve must be generated. This is done by performing a linear regression analysis on the ordered pairs averaged for both trials from the Torvane calibration form (cols. 6 and 7 of fig. 4). The linear equation for Torvane correction is given by the linear equation:

$$y = mx + b \tag{3}$$

where:
y = Torvane reading, ton/ft^2
m = slope of the line
x = equivalent undrained shear strength, (ton/ft^2)
b = y intercept, ton/ft^2 = 0 (calibration curve is forced through zero to ensure that a "0" torvane reading corresponding to a value of "0" shear strength.)

12. Report

12.1 The report is to consist of a completed and checked "Torvane Shear Device (Pocket Vane Shear Meter)" form (fig. 4). If applicable, a correction curve showing the linear regression analysis data is to be prepared (fig. 5).

12.2 All calculations are to show a checkmark and all plotting (if required) must be checked.

7-2359 (8-86) Bureau of Reclamation	**TORVANE SHEAR DEVICE (POCKET VANE SHEAR METER)**	Designation USBR 1445-89

MANUFACTURER Example TORVANE SERIAL NO. P-5340

(1) RADIUS OF VANE (R_v) 0.500 in (2) HEIGHT OF VANE 0.210 in (3) RADIUS (R) OF CALIBRATION WHEEL 2.25 in

(4) MAXIMUM UNDRAINED SHEAR STRENGTH $(Su)_{max}$ = CAPACITY OF TORVANE (ton/ft^2) 1.0 x 13.89* = 13.89 lbf/in^2

CALIBRATION PERFORMED BY _____ DATE _____

CALIBRATION CHECKED BY _____ DATE _____

CALCULATION OF MASS STANDARDS REQUIRED

UNDRAINED SHEAR STRENGTH Su lbf/in^2	TORQUE T = (Su)(A)** in-lbf	FORCE F = (T)/(R) lbf	MASS REQUIRED lbm***	MASS REQUIRED g
1/3(4) = 4.6	2.7	1.2	1.2	545
2/3(4) = 9.3	5.5	2.4	2.4	1090
(4) = 13.9	8.2	3.6	3.6	1634

TORVANE CALIBRATION

TRIAL NO.	ACTUAL MASS OF (5) CALIBRATION STANDARD g	ACTUAL MASS OF (5) CALIBRATION STANDARD lbm	TORQUE T = (R)(5)*** in-lbf	TORVANE METER (6) READING ton/ft^2	EQUIVALENT UNDRAINED (7) SHEAR STRENGTH Su = T/A** lbf/in^2	EQUIVALENT UNDRAINED (7) SHEAR STRENGTH Su = T/A** ton/ft^2	DIFFERENCE = (7) - (6) ton/ft^2
1	500	1.1	2.48	0.28	4.2	0.30	0.02
	1,000	2.2	4.95	0.51	8.4	0.60	0.09
	1,500	3.3	7.43	0.85	12.6	0.91	0.06
2							

*13.89 = $\frac{2000 \text{ lbf/ton}}{144 \text{ in}^2/\text{ft}^2}$

***Implies that 1 lbf = 1 lbm

**(A) = $\pi R_v^2(2H + 2/3 R_v)$ = 0.59

where π = 3.14
R_v = radius of vane, in
H = height of vane, in

TORVANE IS ACCEPTABLE ☐
CORRECTION CURVE IS REQUIRED ☒

REMARKS: _____

GPO 852 - 056

Figure 4. – Torvane shear device (pocket vane shear meter) — example.

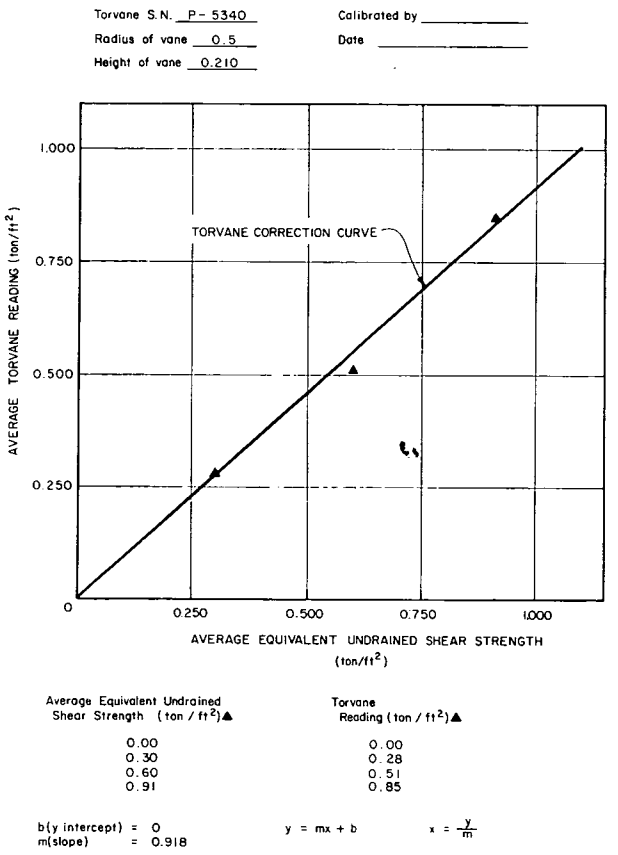

Figure 5. - Torvane correction curve — example.

APPENDIX

X1. TORQUE EQUATION

X1.1 Torque Equations.–The derivation of the equation relating undrained shear strength to measured torque is shown below. Assume a uniform shear stress distribution across the end and around the perimeter of the failure cylinder.

$$\text{Total torque, } T = T_1 + T_2 \quad \text{(X1)}$$

where:

T_1 = torque resistance on the cylindrical surface

$$T_1 = S\,(\text{area})\,(\text{moment arm}) = S\,(2\pi\,RH)\,R \quad \text{(X2)}$$
$$T_1 = 2\,\pi\,R^2\,HS$$

T_2 = torque resistance on the end, assuming constant unit shear resistance

where:

R = radius of the cylindrical shear surface formed by rotation of the vane
H = height of the vane
S = undrained shear strength

$$T_2 = S\,(\text{area})\,(\text{moment arm}) \quad \text{(X3)}$$

Consider an element of area $dr\,(r\,d\theta)$, with undrained shear resistance, S, and moment arm, r:

$$T_2 = \int_0^R \int_0^{2\pi} Sr^2\,d\theta\,dr \quad \text{(X4)}$$

$$T_2 = 2\pi S \int_0^R r^2\,dr \quad \text{(X5)}$$

$$T_2 = 2\pi S \left(\frac{R^3}{3}\right) \quad \text{(X6)}$$

$$T = T_1 + T_2 \quad \text{(X7)}$$

$$T = 2\pi R^2\,SH + 2\pi S \left(\frac{R^3}{3}\right) \quad \text{(X8)}$$

$$T = \pi\,R^2\,\mathrm{S}\left(2H + \frac{2R}{3}\right) \quad \text{(X9)}$$

and

$$S = \frac{T}{\pi R^2 \left(2H + \frac{2\mathrm{R}}{3}\right)} \quad \text{(X10)}$$

UNITED STATES DEPARTMENT OF THE INTERIOR
BUREAU OF RECLAMATION

USBR 1450-89

PROCEDURE FOR

CALIBRATING TRIAXIAL-TYPE CHAMBERS FOR PRESSURE-VOLUME CHANGE RELATIONS

INTRODUCTION

This procedure is under the jurisdiction of the Geotechnical Services Branch, code D-3760, Research and Laboratory Services Division, Denver Office, Denver, Colorado. The procedure is issued under the fixed designation USBR 1450. The number immediately following the designation indicates the year of acceptance or the year of last revision.

1. Scope

1.1 This designation outlines the procedure for calibrating triaxial-type chambers for pressure-volume change relations.

1.2 This calibration procedure is used to determine the relationship between a pressure applied to a triaxial-type chamber and the associated volume change. The pressure-volume change relations obtained are unique to a given triaxial-type chamber system; any change in the equipment used (chamber, chamber tiedown rods, bottom plate, chamber cap, valves, etc.) would warrant that this calibration procedure be repeated.

1.3 This procedure is applicable to triaxial-type chambers at the Bureau's Denver Office. Other chambers of different design may require a slightly different procedure.

2. Auxiliary Tests

2.1 The pressure gauge used to monitor pressure increments to the triaxial-type chamber system and the volume tube used to determine associated volume change are to be calibrated prior to use.

3. Applicable Documents

3.1 *USBR Procedures*:
USBR 1040 Calibrating Pressure Gauges
USBR 1455 Calibrating Volume and Drain Tubes

4. Summary of Method

4.1 A triaxial-type chamber system is de-aired. A 2-inch diameter by 5-inch high (51- by 127-mm) knurled brass specimen is placed in the chamber, and the chamber filled with de-aired water. The chamber is sealed and increments of pressure are applied to the water in the chamber. Volume tube readings are recorded at each pressure increment and are used to determine volume change of the triaxial-type chamber system at each applied pressure increment.

5. Significance and Use

5.1 Triaxial-type chambers must be calibrated for volume change due to application of internal fluid pressure in order to calculate the volume change in test specimens associated with triaxial-type laboratory testing of soils.

5.2 An incorrect pressure-volume change relationship for a given triaxial-type chamber leads to erroneous determination of volume change in test specimens associated with laboratory testing of soils.

5.3 This calibration procedure is to be performed upon receipt of the triaxial-type chamber system and every 2 years thereafter or in the event of any change in the chamber assembly.

6. Apparatus

6.1 *Triaxial-Type Chamber System.*–A fluid filled chamber system is sealed with a chamber cap and bottom plate (fig. 1). A knurled brass specimen encased in a rubber membrane sealed to the specimen end plates is placed in the chamber. The triaxial-type chamber is subjected to an internal fluid pressure. The chamber, chamber cap, and bottom plate are to be impermeable, rigid, and constructed of a noncorrosive material capable of withstanding the maximum anticipated internal pressures to be applied during triaxial-type laboratory soil testing.

6.2 *Chamber Pressure-Maintaining and Measurement Device.*–A chamber pressure-maintaining and measurement device capable of applying and controlling the chamber pressure to within ±0.01 ton/ft² (1 kPa) for chamber pressures less than 2 ton/ft² (200 kPa) and to within ±1 percent for chamber pressures greater than 2 ton/ft² (200 kPa). This device may consist of a reservoir connected to the chamber and partially filled with the chamber fluid (usually water), with the upper part of the reservoir connected to a compressed air supply, and the air pressure being controlled by a pressure regulator and measured by a pressure gauge, electronic pressure transducer, or other device capable of measuring to the prescribed tolerance.

6.3 *Brass Specimen.*–A 2.000-inch diameter by 5.000-inch high (51.00- by 127.00-mm) brass specimen, knurled to 0.007 ±0.002 inch (0.178 ±0.050 mm).

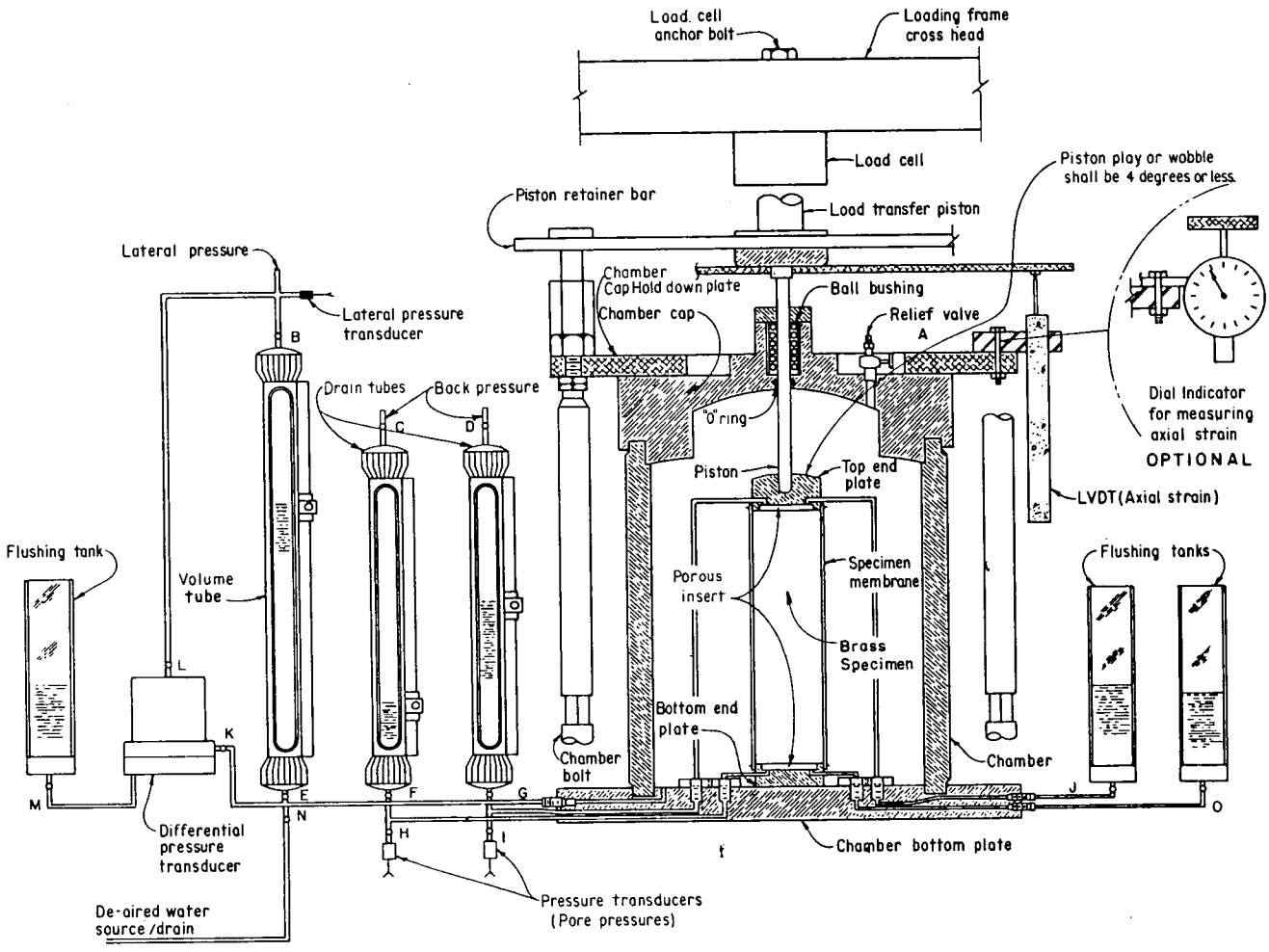

Figure 1. – Schematic of triaxial-type chamber assembly for pressure-volume change relations — calibration.

6.4 *Volume and Drain Tubes.*–Appropriate size constant bore volume and drain tubes and valves used for laboratory testing.

6.5 *Rubber Membrane.*–The rubber membrane used to encase the knurled brass specimen should be carefully inspected prior to use. If any flaws or pinholes are evident, the membrane should be discarded.

6.6 *Rubber O-Rings.*–Rubber O-rings (four required) used to seal the specimen membrane to the specimen top and bottom end plates. The unstressed inside diameter of the O-rings is to be less than 75 percent of the diameter of the end plates to ensure a proper seal.

6.7 *O-Ring Expander.*–An O-ring expander used for placing the O-rings to seal the specimen membrane to the specimen top and bottom end plates and chamber bottom plate.

6.8 *Sealant.*–Sealant grease used to ensure a seal between chamber and chamber bottom plate.

7. Reagents and Materials

7.1 Water used for de-airing the system and performing the calibration is to be de-aired water at room temperature. The purity should be such that the water is free of acids, alkalies, or oils, and is suitable for drinking.

8. Precautions

8.1 *Safety Precautions*:

8.1.1 Safety shoes should be worn while de-airing the system and performing the calibration procedure.

8.1.2 Safety glasses should be worn when the volume or drain tubes are subjected to air pressure.

8.1.3 Water spilled in the work area should be cleaned up immediately.

8.1.4 Pressure should be slowly released from the triaxial system to prevent glass tubes from shattering.

8.2 *Technical Precautions.*–Care must be taken to completely de-air the system prior to performing the calibration.

9. Calibration and Standardization

9.1 Verify that equipment is currently calibrated in accordance with the applicable calibration procedure. If the calibration is not current, perform the calibration before using the equipment for this procedure.

USBR 1040 Calibrating Pressure Gauges
USBR 1455 Calibrating Volume and Drain Tubes

10. Conditioning

10.1 Maintain a constant room temperature to avoid volume changes associated with temperature fluctuations.

11. Procedure

11.1 All data are to be recorded on the "Triaxial Chamber Calibration" form as shown on figure 2.

11.2 *De-Airing the Triaxial-Type Chamber System*:

11.2.1 Close all valves to the chamber bottom plate.

11.2.2 Place the chamber securely into the chamber bottom plate groove to ensure a proper O-ring seal.

11.2.3 Fill the chamber approximately one-half full with de-aired water.

11.2.4 Ensure that water is not leaking from any of the valves.

11.2.5 Secure the chamber cap and insert the piston through the opening in the chamber cap.

11.2.6 Attach vacuum hoses to the tops of volume and drain tubes and the chamber relief valve.

11.2.7 Ensure that the valves to all pressure transducers (if part of the system) are closed.

11.2.8 Open the valves to the top of the drain tubes, volume tube, and chamber relief valve.

11.2.9 Apply a vacuum [approximately 12 to 15 inches of mercury (6 to 7 lbf/in^2)] to all vacuum hoses for approximately 2 minutes.

11.2.10 Release the vacuum to the chamber.

11.2.11 With the vacuum still on to the top of the drain tubes and volume tube, open the valves to the bottom of the volume and drain tubes allowing water to move from the chamber into the tubes.

11.2.12 Allow the volume and drain tubes to fill to near the top of the graduated markings on the tubes.

11.2.13 Close the valves to the bottom of the volume and drain tubes.

11.2.14 Reapply vacuum to the chamber.

11.2.15 Release the vacuum to the volume and drain tubes.

11.2.16 Open the valves to the bottom of the volume and drain tubes allowing water to move from the tubes back into the chamber. DO NOT allow all the water to drain from the tubes.

11.2.17 Close the valves to the bottom of the volume and drain tubes.

11.2.18 Repeat subparagraphs 11.2.10 through 11.2.17 until air bubbles are not observed in the volume and drain tubes.

11.2.19 Release the vacuum to the chamber.

11.2.20 Open the valves to the bottom of the drain and volume tubes.

11.2.21 With the vacuum on the top of the tubes, allow water to move from the chamber into the tubes until the tubes are filled to near the top of their graduated markings.

11.2.22 Close the valves at the top and bottom of volume and drain tubes and release vacuum from all lines.

11.2.23 Remove the vacuum lines.

11.3 *Chamber Calibration*:

11.3.1 Record the system, machine, membrane, and knurled brass specimen numbers and include the volume tube factor (unit volume per unit length).

11.3.2 Drain the water from the chamber.

11.3.3 Remove the piston, chamber cap, and chamber from the chamber bottom plate.

11.3.4 Blot excess water from the bottom specimen end plate surface.

11.3.5 Clean the knurled brass specimen using a wire brush.

11.3.6 Slide the membrane over the knurled brass specimen.

11.3.7 Place the membrane-encased knurled brass specimen on the bottom end plate and roll the membrane over the bottom end plate.

11.3.8 Mount two O-rings on the O-ring expander and, using the O-ring expander, seal the membrane to the bottom end plate with the two O-rings.

11.3.9 Mount two O-rings on the O-ring expander, and place the O-ring expander at approximately midheight around the knurled specimen, oriented so that the O-rings will roll off the top of the O-ring expander onto the top end plate.

11.3.10 Blot excess water from the top specimen end plate.

11.3.11 Place the top specimen end plate on top of the knurled brass specimen and roll the membrane over the top end plate.

11.3.12 Using the O-ring expander, seal the membrane to the top end plate by releasing the two O-rings from the O-ring expander and sliding them into place around the top end plate.

11.3.13 Remove the expander from around the knurled specimen.

11.3.14 Apply a light coating of sealant grease around the bottom of the chamber.

11.3.15 Place the chamber securely into the chamber bottom plate groove to ensure a proper O-ring seal.

11.3.16 Apply a light coating of sealant grease around the top of the chamber.

11.3.17 Begin filling the chamber with de-aired water through the valve located at the chamber bottom plate. With a squeeze bulb, flush away air bubbles that may be present on any parts of the chamber system.

11.3.18 Continue filling the chamber until the chamber is full such that the water forms a surface tension "bubble" above the top of the chamber walls.

11.3.19 Open the valve to the bottom of the volume tube.

11.3.20 Open the chamber relief valve and securely place the chamber cap onto the chamber to ensure a proper O-ring seal.

11.3.21 Thread and tighten the chamber tiedown rods into the chamber bottom plate.

11.3.22 Position the tie down plate and thread and tighten the top nuts on the chamber tiedown rods (use appropriate washers).

7-2361 (11-86) Bureau of Reclamation	**TRIAXIAL CHAMBER CALIBRATION**	Designation USBR 1450-89

SYSTEM NO. 2 MACHINE NO. 24 MEMBRANE NO. D-1

KNURLED BRASS SPECIMEN NO. 2 VOLUME TUBE FACTOR (F) 0.122 in^3/in

CALIBRATION PERFORMED BY _____ DATE _____ CALIBRATION CHECKED BY _____ DATE _____

TIME NO. 1	TIME NO. 2	PRESSURE		TRIAL 1			TRIAL 2			AVERAGE
		lbf/in2	kPa	VOLUME TUBE READING	ΔVOLUME TUBE READING (1)	ΔVOLUME = (1) x (F)	VOLUME TUBE READING	ΔVOLUME TUBE READING (2)	ΔVOLUME = (2) x (F)	
7:55	9:26	0	0	5.00			5.00			
7:56	9:31	5	34	5.46			5.43			
8:10	9:57	5	34	5.54			5.56			
8:15	10:15	5	34	5.54	0.54	0.066	5.56	0.56	0.068	0.067
8:16	10:17	10	69	5.83			5.88			
8:30	10:29	10	69	5.88			5.91			
8:35	10:35	10	69	5.88	0.88	0.107	5.91	0.91	0.111	0.109
8:36	10:36	15	103	6.04			6.03			
8:50	10:48	15	103	6.09			6.08			
8:55	10:52	15	103	6.09	1.09	0.133	6.08	1.08	0.132	0.133
8:56	10:53	20	138	6.21			6.22			
9:10	11:03	20	138	6.25			6.26			
9:15	11:13	20	138	6.25	1.25	0.153	6.26	1.26	0.154	0.154
9:16	11:14	25	172	6.33			6.38			
9:45	11:24	25	172	6.39			6.39			
9:50	11:29	25	172	6.39	1.39	0.170	6.39	1.39	0.170	0.170
9:51	11:30	50	344	6.82			6.82			
10:20	12:05	50	344	6.86			6.89			
10:25	12:10	50	344	6.86	1.86	0.227	6.89	1.89	0.231	0.229
10:26	12:11	75	517	7.20			7.18			
10:53	12:33	75	517	7.23			7.22			
10:58	12:43	75	517	7.23	2.23	0.272	7.22	2.22	0.271	0.272
10:59	12:44	100	689	7.48			7.48			
12:29	12:54	100	689	7.56			7.52			
12:35	1:18	100	689	7.56	2.56	0.312	7.52	2.52	0.307	0.310
12:40	1:26	150	1034	7.94			7.89			
12:52	1:36	150	1034	7.97			7.92			
12:57	2:09	150	1034	7.97	2.97	0.362	7.92	2.92	0.356	0.359
12:58	2:11	200	1378	8.33			8.27			
1:16	2:23	200	1378	8.36			8.30			
1:21	2:29	200	1378	8.36	3.36	0.410	8.30	3.30	0.403	0.407

GPO 852 - 116

Figure 2. - Triaxial chamber calibration — example.

11.3.23 Continue filling the test chamber with de-aired water until water comes out of the chamber cap relief valve.

11.3.24 Push the piston through the opening in the center of the chamber cap until the piston tip fits into the indentation of the specimen top end plate.

11.3.25 Secure the retainer bar over the top of the piston.

11.3.26 Close the chamber cap relief valve and blot excess water from the chamber cap.

11.3.27 Connect the air pressure line to the top of the volume tube.

11.3.28 Ensure that the valves on the top and bottom of the volume tube are open.

11.3.29 Read and record the initial volume tube reading.

11.3.30 Apply an increment of air pressure to the system, and read and record the volume tube reading and applied pressure.

NOTE 1.–Recommended pressure increments for standard and high-pressure triaxial testing are given in table 1.

11.3.31 Keep the pressure applied in subparagraph 11.3.30 on the chamber system for a minimum of 10 minutes.

11.3.32 Read and record the volume tube reading and air pressure.

Table 1. - Recommended pressure increments for pressure-volume change relations for triaxial-type chamber systems.

Standard triaxial testing		High-pressure applications	
lbf/in²	kPa	lbf/in²	kPa
0	0	0	0
5	30	5	30
10	60	10	60
15	90	15	90
20	120	25	170
25	170	50	340
50	340	75	520
75	520	100	690
100	690	150	1030
150	1030	200	1380
200	1380	300	2070
		500	3450
		750	5170
		1000	6900

11.3.33 After an additional 5 minutes, read and record the volume tube reading and air pressure again.

11.3.34 If there is no change in the volume tube reading, repeat subparagraphs 11.3.30 through 11.3.33 for each pressure increment. If there is a change in the volume tube reading, stay at the same pressure increment until no volume change is recorded; then repeat subparagraphs 11.3.30 through 11.3.33 for each additional pressure increment.

11.3.35 When the calibration is complete, slowly release the air pressure on the system to zero, drain the water from the system, disassemble the chamber, and repeat subparagraphs 11.2 through 11.3.34.

11.3.36 Calculate the volume change of the chamber system for each pressure increment for each trial.

11.3.37 Calculate the average volume change of the system for each pressure increment.

11.3.38 Prepare a plot of the average volume change versus pressure applied as shown on figure 3.

12. Calculations

12.1 The calculations required are shown on figure 2.

13. Report

13.1 The report is to consist of the following completed and checked form and plot:

"Triaxial Chamber Calibration" form (fig. 2).

"Average volume change versus pressure applied" plot (fig. 3).

13.2 All calculations are to show a checkmark and all plotting must be checked.

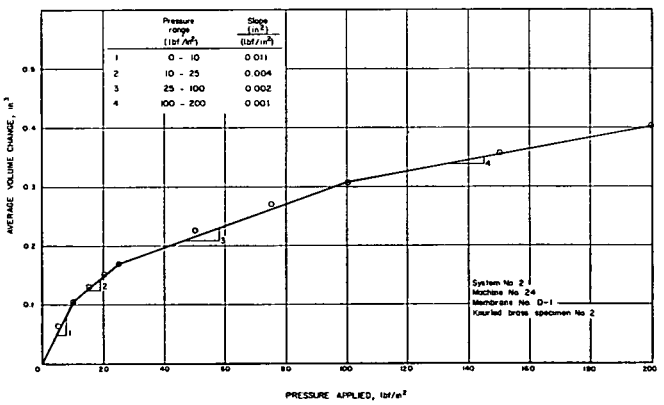

Figure 3. - Average volume change versus pressure applied — plot.

UNITED STATES DEPARTMENT OF THE INTERIOR
BUREAU OF RECLAMATION

USBR 1455-89

PROCEDURE FOR

CALIBRATING VOLUME AND DRAIN TUBES

INTRODUCTION

This procedure is under the jurisdiction of the Geotechnical Services Branch, code D-3760, Research and Laboratory Services Division, Denver Office, Denver, Colorado. The procedure is issued under the fixed designation USBR 1455. The number immediately following the designation indicates the year of acceptance or the year of last revision.

1. Scope

1.1 This designation outlines the procedure for calibrating volume or drain tubes used for laboratory testing.

1.2 This calibration procedure is used to determine a calibration factor for a volume or drain tube.

2. Summary of Method

2.1 A calibration factor must be determined for individual volume and drain tubes used for laboratory testing of soils. De-aired water is slowly drained from a volume or drain tube into a graduated cylinder. The calibration factor is determined by dividing the volume of water collected by the length of the portion of the volume or drain tube calibrated.

3. Significance and Use

3.1 A calibration factor must be determined for individual volume or drain tubes in order to calculate the volume change in test specimens associated with laboratory testing of soils.

3.2 The calibration factor obtained from this procedure is unique to a given volume or drain tube. If the volume or drain tube is changed on a laboratory testing system, this calibration procedure must be repeated.

3.3 An incorrect volume or drain tube calibration factor will lead to erroneous determination of volume changes in test specimens associated with laboratory testing of soils.

3.4 This calibration procedure is to be performed upon installation of the volume or drain tube.

4. Apparatus

4.1 *Volume or Drain Tube.*–Appropriate size volume or drain tube.

4.2 *Graduated Cylinder.*–100-mL capacity, graduated to 1.0 mL.

4.3 *Hose Clamp or Drain Tube Valve.*–Appropriate size hose clamp or drain valve capable of controlling the water flow from the volume or drain tube.

4.4 *Tubing.*–Plastic tubing of appropriate size and length to fit on the bottom of the volume or drain tube for drainage.

5. Reagents and Materials

5.1 The water used in this procedure is to be de-aired water that is at room temperature [68 °F (20 °C)]. The purity should be such that it is free of acids, alkalies, or oils and is suitable for drinking.

6. Precautions

6.1 *Technical Precautions.*–The volume or drain tube and connecting hoses should be cleaned regularly to remove impurities that may clog lines and restrict free waterflow.

7. Preparation of Apparatus

7.1 Clean the volume or drain tube and connecting hoses by flushing the system with clean water.

7.2 Check tubing and drain valve for leakage and/or restrictions and replace or clean, if necessary.

7.3 Locate the volume or drain tube number. If the volume or drain tube does not have a number, print one (permanently) on the volume or drain tube.

8. Calibration and Standardization

8.1 Not applicable, reference standards are not used for this procedure.

9. Conditioning

9.1 Not applicable, special conditioning requirements are not needed for this procedure.

10. Procedure

10.1 All data are to be recorded on the "Volume or Drain Tube Calibration" form as shown on figure 1A (inch-pound units) or figure 1B (SI units).

10.2 Record the volume or drain tube number.

10.3 Securely connect the plastic tubing to the bottom of the volume or drain tube.

10.4 Connect the clamp or valve to the tubing, and close the clamp or valve to prevent any water flow.

10.5 Fill the volume or drain tube with de-aired water.

10.6 Determine the water level at the top portion of the volume or drain tube to the highest accuracy possible and record it as the *Initial tube reading.* This initial water

level should be near the top of the graduated markings on the tube.

10.7 Open the clamp or valve, and drain water from the volume or drain tube into a graduated cylinder.

10.8 Close the clamp or valve after collecting enough water to bring the water level near the bottom of the graduated markings on the tube. Record the volume of water collected to the nearest 0.5 mL.

10.9 Depending on the capacity of the volume or drain tube, more than 100 mL of water may need to be collected to calibrate a sufficient length of the volume or drain tube. If this is the case, the graduated cylinder is to be emptied, and subparagraphs 10.7 and 10.8 repeated until a sufficient length of the tube has been calibrated.

10.10 Determine the water level at the bottom portion of the volume or drain tube to the highest accuracy possible and record it as the *Final tube reading* on the test form.

10.11 Repeat subparagraphs 10.5 through 10.10 a minimum of three times.

10.12 Calculate the tube factor for each calibration trial. Record these values as shown on figure 1A or 1B.

10.13 The calculated tube factors for each of the trials are to be within ±2.5 percent of one another. If this is not the case, the calibration procedure is to be repeated.

10.14 Calculate an average tube factor and record it on the test form. This average value is to be used for calculating volume changes measured using the volume or drain tube.

11. Calculations

11.1 Calculations for determining the average tube factor are shown on figure 1A or 1B.

12. Report

12.1 The report is to consist of a completed and checked "Volume or Drain Tube Calibration" test form (fig. 1A or 1B).

12.2 All calculations are to show a checkmark.

7-2360 (8-86) Bureau of Reclamation	VOLUME OR DRAIN TUBE CALIBRATION	Designation USBR 1455-89

SYSTEM NO. 5 MACHINE NO. 20 TUBE NO. 4

CALIBRATION PERFORMED BY _____ DATE _____ CALIBRATION CHECKED BY _____ DATE _____

TRIAL NO. 1

A. INITIAL TUBE READING	2.53	in
B. FINAL TUBE READING	24.24	in
C. LENGTH OF TUBE CALIBRATED (B - A)	21.71	in
D. WATER COLLECTED (38.5 [CYLINDER 1]) + (_____ [CYLINDER 2]) + (_____ [CYLINDER 3])	38.5	ml
E. CUBIC INCHES OF WATER COLLECTED (D/16.387*)	2.35	in^3
F. TUBE FACTOR (E/C)	0.108	in^3/in

TRIAL NO. 2

A. INITIAL TUBE READING	2.33	in
B. FINAL TUBE READING	26.68	in
C. LENGTH OF TUBE CALIBRATED (B - A)	24.35	in
D. WATER COLLECTED (43.5 [CYLINDER 1]) + (_____ [CYLINDER 2]) + (_____ [CYLINDER 3])	43.5	ml
E. CUBIC INCHES OF WATER COLLECTED (D/16.387*)	2.65	in^3
F. TUBE FACTOR (E/C)	0.109	in^3/in

TRIAL NO. 3

A. INITIAL TUBE READING	2.16	in
B. FINAL TUBE READING	25.45	in
C. LENGTH OF TUBE CALIBRATED (B - A)	23.29	in
D. WATER COLLECTED (42.5 [CYLINDER 1]) + (_____ [CYLINDER 2]) + (_____ [CYLINDER 3])	42.5	ml
E. CUBIC INCHES OF WATER COLLECTED (D/16.387*)	2.59	in^3
F. TUBE FACTOR (E/C)	0.111	in^3/in

AVERAGE TUBE FACTOR 0.109 in^3/in

*Conversion factor to convert ml to in^3

GPO 851-839

Figure 1A. – Volume or drain tube calibration data — inch-pound units example.

7m-2360 (8-86) Bureau of Reclamation	VOLUME OR DRAIN TUBE CALIBRATION	Designation USBR 1455-89

SYSTEM NO. 6 MACHINE NO. 21 TUBE NO. 5

CALIBRATION PERFORMED BY _____ DATE _____ CALIBRATION CHECKED BY _____ DATE _____

TRIAL NO. 1

A.	INITIAL TUBE READING	1.00	cm
B.	FINAL TUBE READING	9.54	cm
C.	LENGTH OF TUBE CALIBRATED (B - A)	8.54	cm
D.	WATER COLLECTED (38.5 [CYLINDER 1]) + (_____ [CYLINDER 2]) + (_____ [CYLINDER 3])	38.5	ml*
E.	TUBE FACTOR (D/C)*	4.51	cm^3/cm

TRIAL NO. 2

A.	INITIAL TUBE READING	0.93	cm
B.	FINAL TUBE READING	10.50	cm
C.	LENGTH OF TUBE CALIBRATED (B - A)	9.57	cm
D.	WATER COLLECTED (43.5 [CYLINDER 1]) + (_____ [CYLINDER 2]) + (_____ [CYLINDER 3])	43.5	ml*
E.	TUBE FACTOR (D/C)*	4.55	cm^3/cm

TRIAL NO. 3

A.	INITIAL TUBE READING	0.85	cm
B.	FINAL TUBE READING	10.02	cm
C.	LENGTH OF TUBE CALIBRATED (B - A)	9.17	cm
D.	WATER COLLECTED (42.5 [CYLINDER 1]) + (_____ [CYLINDER 2]) + (_____ [CYLINDER 3])	42.5	ml*
E.	TUBE FACTOR (D/C)	4.63	cm^3/cm

AVERAGE TUBE FACTOR 4.56 cm^3/cm

*1 ml = 1 cm^3

GPO 841-840

Figure 1B. - Volume or drain tube calibration data — metric units example.

UNITED STATES DEPARTMENT OF THE INTERIOR
BUREAU OF RECLAMATION

USBR 3000-89

PROCEDURE FOR

USING SIGNIFICANT DIGITS IN CALCULATING AND REPORTING LABORATORY DATA

INTRODUCTION

This procedure is under the jurisdiction of the Geotechnical Services Branch, code D-3760, Research and Laboratory Services Division, Denver Office, Denver, Colorado. The procedure is issued under the fixed designation USBR 3000. The number immediately following the designation indicates the year of acceptance or the year of last revision.

1. Scope

1.1 This designation outlines the procedure for using significant digits in calculating and reporting laboratory test results.

1.2 Definitions and guidelines are presented for determining the proper number of significant digits for intermediate calculations and reporting results.

2. Applicable Documents

2.1 *USBR Procedure*:
USBR 9300 Checking, Rounding, and Reporting of Laboratory Data

2.2 *ASTM Standard*:
E 29 Indicating Which Places of Figures Are to Be Considered Significant in Specified Limiting Values

3. Significance and Use

3.1 Guidelines for significent digits should be used for calculating and reporting data when specified requirements are not included in a procedure, designation, or other document.

3.2 To assure proper interpretation, data should be calculated and reported in accordance with the principles of significant digit theory.

3.3 Using uniform procedures for determining the proper number of significant digits—for conversion factors, intermediate and final calculations and reporting of data—standardizes and simplifies some operator and checker functions.

NOTE 1.–Procedures for checking, rounding, and reporting laboratory data are described in USBR 9300.

3.4 The principles and theory of significant digits are widely recognized and accepted in the technical engineering community; accordingly, they are being adopted as Bureau of Reclamation policy for all geotechnical laboratories.

4. Terminology

4.1 *Significant Digits.*–A significant digit is any of the numbers 1, 2, 3, 4, 5, 6, 7, 8, or 9. Zero is a significant digit if it comes between two numbers or to the right of the decimal point at the end of the number.

4.2 *Accuracy.*–Accuracy is the degree of agreement of individual or average measurements with an accepted reference value.

4.3 *Precision.*–Precision is the degree of mutual agreement among individual measurements.

4.4 *Number.*–In this procedure, reference to "number" means that the number is a measured or approximated number, except when used in the context of "number of significant digits" or "number of decimal places".

4.5 *Exact Count.*–In this procedure, reference to "exact count" means that the number is considered to have an infinite number of significant digits. (See subpar. 6.1.3.)

5. Precautions

5.1 *Technical Precautions.*–The guidelines for using significant digits should not be interpreted as absolute rules but as guides to calculate and report data without exaggerating the accuracy of the values.

6. Procedure

6.1 Use the following rules as guidelines for performing mathematical calculations to determine the proper number of significant digits.

6.1.1 *Rule 1.*–In multiplication and division, the number of significant digits in the result is the same as in the number with the least number of significant digits.

6.1.1.1 *Example 1.*–Determine the volume, V, of an object having a base area, A, of 28.48 in^2 and a height, h, of 6.12 inches. Mathematically:

$$V = Ah = (28.48 \text{ in}^2)(6.12 \text{ in}) = 174.2976 \text{ in}^3$$

However, this "answer" must be considered wrong because it shows an accuracy that the given measurements do not support. By stating that height was 6.12 inches, it means the height was measured by some available instrument to be between 6.115 and 6.125 inches. Similarly, the true area of the base was determined to be between 28.475 and 28.485 in^2. Thus, all that can be said about the volume is that it is between the minimum value of (28.475 in^2)

(6.115 in) = 174.124625 in^3 and the maximum value of (28.485 in^2) (6.125 in) = 174.470625 in^3. Since there are only three significant digits in the number with the least number of significant digits (6.12), it is invalid to report more than the first three digits in the result which leads to (see USBR 9300 for rounding procedures):

$$V = (28.48\ in^2)\ (6.12\ in) = 174\ in^3$$

6.1.2 *Rule 2.*–For addition and subtraction, the number of decimal places in the result is the same as in the number containing the fewest digits following the decimal.

6.1.2.1 *Example 2.*–The inside diameter of a mold has been measured to be 4.124 inches using calipers graduated to 0.001 inch. Using another pair of calipers graduated to only 0.01 inch, the diameter is measured as 4.12 inches. What is the average of these two measurements? The first step in the solution is to sum the two measurements. Mathematically, the sum of 4.124 inches and 4.12 inches = 8.244 inches. However, the number of significant digits in the result is controlled by the 4.12 inch measurement. The inside diameter of the mold using the first pair of calipers was measured to be between a minimum value of 4.1235 inches and a maximum value of 4.1245 inches. Similarly, the range using the other caliper measurement was between 4.115 inches and 4.125 inches. The sum of the measurements lies between a minimum value of 4.1235 inches + 4.115 inches = 8.2385 inches, and a maximum value of 4.1245 inches + 4.125 inches = 8.2495 inches. By inspection, the last two digits of both sums are invalid. The sum should be written as: 4.124 inches + 4.12 inches = 8.24 inches, with even the final digit being in doubt by one unit.

6.1.3 *Rule 3.*–When an *exact count* is used in a calculation with a number, the number of significant digits in the result is the same as the number of significant digits in the number.

6.1.3.1 *Example 3.*–Returning to example 2, the sum of the two measurements was found to be 8.24 inches. To find the average value of the inside diameter, this sum must be divided by two. In this case, two is not a measurement but an exact count. Numbers that are exact counts are treated as though they consist of an infinite number of significant digits. Therefore,

$$8.24\ \text{inches} / 2 = 4.12\ \text{inches}$$

Since 8.24 has three significant digits, the result should also contain three significant digits.

6.1.4 *Rule 4.*–To preserve accuracy in calculations involving tabulated numbers, conversion factors, and measured numbers, the tabular values should retain at least one more significant digit than the measured number.

6.1.4.1 *Example 4.*–Compute the inside circumference, C, of a mold having an inside diameter, d, of 6.025 inches. The equation for circumference is:

$$C = \pi d = \pi\ (6.025)$$

Since 6.025 contains four significant digits, the result can contain no more than four significant digits. How many significant digits should be used for the tabular value of π? Consider the following computations, taken to seven digits for the sake of illustration only, knowing that the result can contain no more than four significant digits:

Computation		*Result*
(6.025)(3.1415927)	=	18.92810
(6.025)(3.14159)	=	18.92808
(6.025)(3.1416)	=	18.92814
(6.025)(3.142)	=	18.93055
(6.025)(3.14)	=	18.91850

Using rules previously discussed, the result,

$$C = \pi\ (6.025) = 18.93\ \text{inches}$$

is always valid in this example as long as at least four significant digits are retained for the tabular value of π.

NOTE 2.–This is not always the case. For example, convert 11.4 feet to meters using the conversion factor 0.3048 meters equals 1 foot:

(11.4 feet)(0.3048 meters/foot) = 3.47 meters,

but

(11.4 feet)(0.305 meters/foot) = 3.48 meters.

Thus, rounding the conversion factor to the same number of significant digits as in the measured quantity, prior to computation, reduced the accuracy of the result.

UNITED STATES DEPARTMENT OF THE INTERIOR
BUREAU OF RECLAMATION

USBR 3900-89

PROCEDURE FOR

STANDARD DEFINITIONS OF TERMS AND SYMBOLS RELATING TO SOIL MECHANICS

INTRODUCTION

These definitions are under the jurisdiction of the Geotechnical Services Branch, code D-3760, Research and Laboratory Services Division, Denver Office, Denver, Colorado. The standard is issued under the fixed designation USBR 3900. The number immediately following the designation indicates the year of acceptance or the year of last revision.

Terms, symbols, and definitions are those recommended for use within the Bureau of Reclamation. Wherever possible, terms, symbols, and definitions are the same as those in ASTM D 653 and indicated by (ASTM) following the definition. In some cases, where the ASTM definitions are used in this designation, the term moisture content is substituted for water content (ASTM) and the term mass is substituted for weight (ASTM). In addition, the preferred units for the inch-pound system and for the SI (International System of Units) are noted. Terms for which units are not given are dimensionless.

For terms related more to geology, refer to *Geology for Designs and Specifications of the Assistant Commissioner–Engineering and Research* or to the *Glossary of Geology*, published by the American Geological Institute (refer to references).

For soil mechanics terms not included in this list, refer to ASTM D 653.

The abbreviations following the definitions are used to refer to the source of the definition:

ASTM — American Society for Testing and Materials
ISRM — International Society for Rock Mechanics
ISSMFE — International Society for Soil Mechanics and Foundation Engineering

The following letters of the Greek alphabet are used in this nomenclature:

Greek letter	*Greek name*	*Greek letter*	*Greek name*
α	alpha	μ	mu
γ	gamma	ν	nu
Δ or δ	delta	ρ	rho
ϵ	epsilon	σ	sigma
η	eta	τ	tau
θ	theta	ϕ	phi

Absorbed Water — Water held mechanically in a soil or rock mass and having physical properties not substantially different from ordinary water at the same temperature and pressure (ASTM).

Active Earth Pressure — see Earth Pressure

Activity — The ratio of: (1) the plasticity index, to (2) the percent by dry mass of soil particles finer than 2 μm in size.

Adhesion (Unit: c_a, lbf/in^2 or kPa) (Total: C_a, lbf or N) — Shearing resistance between soil and another material under zero externally applied pressure (ASTM).

Adsorbed Water — Water in a soil or rock mass, held by physicochemical forces, having physical properties substantially different from absorbed water or chemically combined water, at the same temperature and pressure (ASTM).

Allowable Bearing Capacity (q_a, ton$_f$/ft^2 or kPa) — The maximum pressure that can be permitted on foundation soil, giving consideration to all pertinent factors, with adequate safety against rupture of the soil mass or movement of the foundation of such magnitude that the structure is impaired (ASTM definition for Allowable Bearing Value).

Angle of Internal Friction [ϕ, degrees (°)] — The angle between the axis of normal stress and the tangent to the Mohr envelope at a point representing a given failure-stress condition for solid material (ASTM).

Angle of Repose [α, degrees (°)] — Angle between the horizontal and the maximum slope that a soil assumes through natural processes. For dry granular soils, the effect of the height of slope is negligible; for cohesive soils, the effect of height of slope is so great that the angle of repose is meaningless (ASTM).

Angle of Wall Friction [δ, degrees (°)] — Angle between the abscissa and the tangent of the curve representing the relationship of shearing resistance to normal stress acting between soil and surface of another material (ASTM).

Anisotropic Mass — A mass having different properties in different directions at any given point (ASTM).

Apparent Cohesion — See Cohesion

Arching — The transfer of stress from a yielding part of a soil or rock mass to adjoining less-yielding or restrained parts of the mass (ASTM).

Atterberg Limits — The boundaries (determined by laboratory tests) of moisture content in a soil between the liquid state and plastic state (known as liquid limit), between the plastic state and the semisolid state (known as the plastic limit), and between the semisolid state and the solid state (known as the shrinkage limit).

Average Degree of Consolidation ($\overline{U_t}$) — The ratio of the total volume change in a soil mass at a given time to the total volume change anticipated in the soil mass due to primary consolidation.

$$\overline{U_t} = \frac{\Delta V_t}{\Delta V_{t=\infty}}$$

where:

ΔV_t = volume change over elapsed time, t
$\Delta V_{t=\infty}$ = total anticipated volume change

Base Course — A layer of specified or selected material of planned thickness constructed on the subgrade or subbase for the purpose of serving one or more functions such as distributing load, providing drainage, minimizing frost action, etc. (ASTM).

Base Exchange — The physicochemical process whereby one species of ions adsorbed on soil particles is replaced by another species (ASTM).

Bearing Capacity — See Allowable Bearing Capacity, Ultimate Bearing Capacity

Bentonite — A clay with a high content of the mineral montmorillonite, usually characterized by high swelling on wetting and shrinkage on drying.

Berm — A shelf that breaks the continuity of a slope (ASTM).

Binder — Portion of soil passing No. 40 (425-μm) U.S.A. Standard sieve (ASTM).

Boulder — A particle of rock that will not pass a 12-inch (300-mm) square opening.

Bulking — The increase in volume of a material due to manipulation. Rock bulks upon being excavated; damp sand bulks if loosely deposited, as by dumping, because the apparent cohesion prevents movement of the soil particles to form a reduced volume (ASTM).

Buoyant Unit Weight — See Unit Weight

Capillary Action — The rise or movement of water in the interstices of a soil or rock due to capillary forces (ASTM).

Capillary Fringe Zone — The zone above the free water elevation in which water is held by capillary action (ASTM).

Capillary Head (h, ft or m) — The potential, expressed in head of water, that causes the water to flow by capillary action (ASTM).

Capillary Migration — The movement of water by capillary action (ASTM).

Capillary Rise (h_c, ft or m) — The height above a free water elevation to which water will rise by capillary action (ASTM).

Capillary Water — Water subject to the influence of capillary action (ASTM).

Clay — Soil passing the No. 200 (75-μm) U.S.A. Standard sieve that exhibits plasticity (putty-like properties) within a range of moisture contents, and which exhibits considerable strength when air-dried.

Clay Size — That portion of the soil finer than 0.002 mm (0.005 mm in some cases) (ASTM).

Cobble — A particle of rock that will pass a 12-inch (300-mm) square opening and be retained on a 3-inch (75-mm) U.S.A. Standard sieve.

Coefficient of Compressibility (a_v, units depend on use) — The slope of a one-dimensional compression curve relating void ratio to effective stress.

$$a_v = -\frac{\Delta e}{\Delta \sigma'}$$

where:

Δe = change in void ratio
$\Delta \sigma'$ = change in effective stress

Coefficient of Consolidation (c_v, units depend on use) — A coefficient that relates the change in excess pore pressure with time to the excess pore pressure diffusion in the soil mass in terms of soil mass and pore fluid characteristics. The relationship corresponding to the linear one-dimensional infinitesimal strain consolidation theory is expressed as follows:

$$c_v = \frac{k\,(1 + e)}{a_v\,\gamma_w}$$

where:

k = coefficient of permeability
e = void ratio
a_v = coefficient of compressibility
γ_w = unit weight of water

Coefficient of Curvature (Cc) — The ratio $(D_{30})^2/(D_{10} \times D_{60})$, where D_{60}, D_{30}, and D_{10} are the particle diameters corresponding to 60, 30, and 10 percent finer on the cumulative gradation curve, respectively.

Coefficient of Earth Pressure (K) — The principal stress ratio at a point in a soil mass (ASTM).

Active (K_A) — The minimum ratio of: (1) the minor principal stress, to (2) the major principal stress. This is applicable where the soil has yielded sufficiently to develop a lower limiting value of the minor principal stress (ASTM).

At Rest (K_o) — The ratio of: (1) the minor principal stress, to (2) the major principal stress. This is applicable where the soil mass is in its natural state without having been permitted to yield or without having been compressed (ASTM).

Passive (K_p) — The maximum ratio of: (1) the major principal stress, to (2) the minor principal stress. This is applicable where the soil has been compressed sufficiently to develop an upper limiting value of the major principal stress (ASTM).

Coefficient of Internal Friction (μ) — The tangent of the angle of internal friction (see Internal Friction) (ASTM).

Coefficient of Permeability (k, ft/yr or cm/s) — The rate of discharge of water under laminar flow conditions through a unit cross-sectional area of a porous medium under a unit hydraulic gradient and standard temperature conditions (usually 20 °C) (ASTM).

Coefficient of Subgrade Reaction — See Modulus of Subgrade Reaction

Coefficient of Uniformity (Cu) — The ratio D_{60}/D_{10}, where D_{60} and D_{10} are the particle diameters corresponding to 60 and 10 percent finer on the cumulative gradation curve, respectively.

Coefficient of Viscosity (η, lbf/in² or kPa) — The shearing force per unit area required to maintain a unit difference in velocity between two parallel layers of a fluid a unit distance apart (ASTM).

Coefficient of Volume Compressibility (m_v, units depend on use) — The slope of a one-dimensional compression curve relating strain to effective stress.

$$m_v = \frac{\Delta\epsilon}{\Delta\sigma'}$$

where:

$\Delta\epsilon$ = change in strain
$\Delta\sigma'$ = change in effective stress

Cohesion (c, lbf/in² or kPa) — The portion of the shear strength of a soil indicated by the term c in Coulomb's equation, $s = c + \sigma\tan\phi$, (ASTM).

Apparent Cohesion — Cohesion in granular soils due to capillary forces (ASTM).

Cohesionless Soil — A soil that, when unconfined, has little or no strength when air-dried and that has little or no cohesion when submerged (ASTM).

Cohesive Soil — A soil that, when unconfined, has considerable strength when air-dried and that has significant cohesion when submerged (ASTM).

Colloidal Particles — Soil particles that are so small that the surface activity has an appreciable influence on the properties of the aggregate (ASTM). For USBR use, particles smaller than 0.001 mm.

Compaction — The densification of a soil by means of mechanical manipulation (ASTM).

Compaction Curve — The curve showing the relationship between the dry unit weight and the moisture content of a soil for a given compactive effort (ASTM).

Compaction Test — A laboratory compacting procedure whereby a soil at a known moisture content is placed in a specified manner into a mold of given dimensions, subjected to a compactive effort of controlled magnitude, and the resulting dry unit weight determined. The procedure is repeated for various moisture contents sufficient to establish a relation between moisture content and dry unit weight (similar to ASTM).

Compression — The reduction in volume of a soil mass resulting from an increase in effective stress.

Compression Curve — Any function relating volume change to effective stress.

Compression Index (C_c) — The slope of the virgin compression line of a one-dimensional compression curve relating void ratio to the logarithm of effective stress.

$$C_c = - \frac{\Delta e}{\Delta \log \sigma'}$$

where:

Δe = change in void ratio
$\Delta \log \sigma'$ = change in log of effective stress

Compression Ratio/Modified Compression Index ($C_{c\epsilon}$) — The slope of the virgin compression line of a one-dimensional compression curve relating strain to the logarithm of effective stress.

$$C_{c\epsilon} = \frac{\Delta \epsilon}{\Delta \log \sigma'}$$

where:

$\Delta \epsilon$ = change in strain
$\Delta \log \sigma'$ = change in log of effective stress

Compressive Strength — See Strength

Cone Penetration Resistance — See Penetration Resistance

Consistency — The relative ease with which a soil can be deformed (ASTM).

Consistency Limits — See Atterberg Limits

Consolidation — The time-dependent reduction in volume of a soil mass resulting from an increase in effective stress.

Initial Compression — An immediate reduction in volume of a loaded soil mass under an applied load due principally to expulsion and compression of gases in the soil voids.

Primary Consolidation — The reduction in volume of a loaded soil mass due principally to expulsion of incompressible fluid from the void spaces of the mass and accompanied by a transfer of the load from the fluid to the soil solids.

Secondary Consolidation — The reduction in volume of a loaded soil mass due to the time-dependent adjustment of the internal structure of the soil mass.

Consolidation Curve — Any function relating volume change to time.

Consolidometer — Apparatus used for one-dimensional consolidation/compression testing.

Creep — Slow movement of rock debris or soil usually imperceptible except to observations of long duration. Time-dependent strain or deformation, for example, continuing strain with sustained stress (ASTM).

Critical Circle or Critical Surface — The sliding surface assumed in a theoretical analysis of a soil mass for which the factor of safety is a minimum (ASTM).

Critical Density — See Void Ratio

Critical Height (H_c, ft or m) — The maximum height at which a vertical or sloped bank of soil will stand unsupported under a given set of conditions (ASTM).

Critical Hydraulic Gradient — See Hydraulic Gradient

Critical Slope [degrees (°)] — The maximum angle with the horizontal at which a sloped bank of soil or rock of given height will stand unsupported (ASTM).

Critical Void Ratio — See Void Ratio

Degree of Consolidation ($U_{z,t}$) — Dimensionless term used to describe the extent of pore pressure dissipation at a point in a soil mass at a specific time.

$$U_{z,t} = \frac{u_{z,i} - u_{z,t}}{u_{z,i}}$$

where:

$u_{z,i}$ = initial excess pore pressure at distance, z
$u_{z,t}$ = excess pore pressure at distance, z, and time, t

Degree of Saturation — See Percent Saturation

Density (ρ, lbm/ft^3 or kg/m^3) — Mass per unit volume (ASTM). (Note: Although ρ is the correct symbol for density, the symbol γ has often been used in soil mechanics literature to represent density; γ should be used for unit weight (see Unit Weight).

Deviator Stress ($\sigma_1 - \sigma_3$, lbf/in^2 or kPa) — The difference between the major and minor principal stresses in a triaxial test (ASTM).

Dilatancy — The expansion of cohesionless soils when subject to shearing deformation (ASTM).

Dilatancy Test — A test used to indicate the presence of significant amounts of rock flour, silt, or very fine sand in a fine-grained soil. It consists of shaking a pat of wet soil, having a consistency of thick paste, in the palm of the hand; observing the surface for a glossy or livery appearance; then squeezing the pat; and observing if a rapid apparent drying and subsequent cracking of the soil occurs (ASTM definition of Shaking Test).

Direct Shear Test — A shear test in which soil or rock under an applied normal load is stressed to failure by moving one section of the specimen container (shear box) relative to the other section (similar to ASTM).

Discharge Velocity (V, ft/s or m/s) — Rate of discharge of water through a porous medium per unit of total area perpendicular to the direction of flow (ASTM).

Dispersing Agent — An agent used to assist in separating individual fine soil particles and to prevent them from flocculating when in suspension.

Dispersive Clay — Clay colloids that deflocculate in the presence of water because the physicochemical repulsive forces on the particles exceed the attractive forces. Dispersive clay colloids are easily detached from one another, and the individual particles go into suspension in the presence of water.

Drawdown — Vertical distance the free water elevation is lowered or the reduction of the pressure head due to the removal of free water (ASTM).

Dry Unit Weight — See Unit Weight

Earth — See Soil

Earth Pressure (Force) (Pressure: p, lbf/in^2 or kPa) (Force: P, lbf or N) — The pressure or force exerted by soil on any boundary (ASTM).

Active Earth Pressure (P_A or p_A) — The minimum value of earth pressure. This condition exists when a soil mass is permitted to yield sufficiently to cause its internal shearing resistance along a potential failure surface to be completely mobilized (ASTM).

At-Rest Earth Pressure (P_o or p_o) — The value of the earth pressure when the soil mass is in its natural state without having been permitted to yield or without having been compressed (ASTM).

Passive Earth Pressure (P_P or p_p) — The maximum value of earth pressure. This condition exists when a soil mass is compressed sufficiently to cause its internal shearing resistance along a potential failure surface to be completely mobilized (ASTM).

Effective Diameter (D_{10}, mm) — Particle diameter corresponding to 10 percent finer on the accumulative gradation curve (ASTM).

Effective Force (F', lbf or N) — The force transmitted through a soil or rock mass by intergranular pressures (ASTM).

Effective Porosity (n_e) — The ratio of: (1) the volume of a soil or rock mass that can be drained by gravity, to (2) the total volume of the mass (ASTM).

Effective Stress — See Stress

Equipotential Line — See Piezometric Line

Equivalent Diameter (D, mm) — The diameter of a hypothetical sphere composed of material having the same specific gravity as that of the actual soil particle and of such size that it will settle in a given liquid at the same terminal velocity as the actual soil particle (ASTM).

Equivalent Fluid — A hypothetical fluid having a unit weight such that it will produce a pressure against a lateral support presumed to be equivalent to that produced by the actual soil. This simplified approach is valid only when deformation conditions are such that the pressure increases linearly with depth and the wall friction is neglected (ASTM).

Equivalent Size — See Equivalent Diameter

Exchange Capacity — The capacity to exchange ions as measured by the quantity of exchangeable ions in a soil or rock (ASTM).

Expansion — The increase in volume of a soil mass.

Fill — Manmade deposits of natural soils or rock products and waste materials designed and installed in such a manner as to provide drainage, yet prevent the movement of soil particles due to flowing water (ASTM).

Filter — A layer or combination of layers of pervious materials designed and installed in such a manner as to provide drainage, yet prevent the movement of soil particles due to flowing water (ASTM).

Fines — Portion of soil finer than a No. 200 (75 μm) U.S.A. Standard sieve (ASTM).

Floc — Loose, open-structured mass formed in a suspension by the aggregation of minute particles (ASTM).

Flocculation — The process of forming flocs (ASTM).

Flow Channel — The portion of a flow net bounded by two adjacent flow lines (ASTM).

Flow Curve — The locus of points obtained from a standard liquid limit test and plotted on a graph representing moisture content as ordinate on an arithmetic scale and the number of blows as abscissa on a logarithmic scale (ASTM).

Flow Failure — Failure in which a soil mass moves over relatively long distances in a fluidlike manner (ASTM).

Flow Line — The path that a particle of water follows in its course of seepage under laminar flow conditions (ASTM).

Flow Net — A graphical representation of flow lines and equipotential (piezometric) lines used in the study of seepage phenomena (ASTM).

Flow Slide — The failure of a sloped bank of soil in which the movement of the soil mass does not take place along a well-defined surface of sliding (ASTM).

Footing — Portion of the foundation of a structure that transmits loads directly to the soil (ASTM).

Foundation — Lower part of a structure that transmits the load to the soil or rock (ASTM).

Foundation Soil — Upper part of the earth mass carrying the load of the structure (ASTM).

Free Water/Gravitational Water/Ground Water/Phreatic Water — Water that is free to move through a soil or rock mass under the influence of gravity (ASTM).

Free Water Elevation/Water Table/Ground-Water Surface/Free Water Surface/Ground-Water Elevation — Elevations at which the pressure in the water is zero with respect to the atmospheric pressure (ASTM).

Frost Action — Freezing and thawing of moisture in materials and the resultant effects on these materials and on structures of which they are a part or with which they are in contact (ASTM).

Frost Boil —

(a) Softening of soil occurring during a thawing period due to the liberation of water from ice lenses or layers (ASTM).

(b) The hole formed in flexible pavements by the extrusion of soft soil and melt waters under the action of wheel loads (ASTM).

(c) Breaking of a highway or airfield pavement under traffic and the ejection of subgrade soil in a soft and soupy condition caused by the melting of ice lenses formed by frost action (ASTM).

Frost Heave — The raising of a surface due to the accumulation of ice in the underlying soil or rock (ASTM).

Gradation — The proportions by mass of a soil or fragmented rock distributed in specified particle-size ranges (ASTM).

Gradation Analysis — The process of determining gradation (ASTM).

Grain-Size Distribution — See Gradation

Gravel — Particles of rock that will pass a 3-inch (75-mm) U.S.A Standard sieve and be retained on a No. 4 (4.75-mm) sieve.

Ground Water — See Free Water and Free Water Elevation

Heave — Upward movement of soil caused by expansion or displacement resulting from phenomena such as: moisture absorption, removal of overburden, driving of piles, frost action, and loading of an adjacent area (ASTM).

Homogeneous Mass — A mass that exhibits essentially the same physical properties at every point throughout the mass (ASTM).

Hydraulic Gradient (i) — The loss of hydraulic head per unit distance of flow, $\frac{\Delta H}{\Delta L}$ (ASTM).

Critical Hydraulic Gradient (i_c) — Hydraulic gradient at which the intergranular pressure in a mass of cohesionless soil is reduced to zero by the upward flow of water (ASTM).

Hydrostatic Pressure (u_o, lbf/in^2 or kPa) — A state of stress in which all the principal stresses are equal (and there is no shear stress) as in a liquid at rest; the product of the unit weight of the liquid and the difference in elevation between the given point and the free water elevation (ASTM).

Hygroscopic Capacity/Hygroscopic Coefficient (w_e) — Ratio of: (1) the mass of water absorbed by a dry soil or rock in a saturated atmosphere at a given temperature, to (2) the mass of the ovendried soil or rock (ASTM).

Hygroscopic Moisture Content (w_H, %) — The moisture content of an air-dried soil or rock (ASTM).

Internal Friction — The portion of the shearing strength of a soil or rock indicated by the terms $\sigma \tan \phi$ in Coulomb's equation $s = c + \sigma \tan \phi$. It is usually considered to be due to the interlocking of the soil or rock grains and the resistance to sliding between the grains (ASTM).

Isochrome — A curve showing the distribution of the excess hydrostatic pressure at a given time during a process of consolidation (ASTM).

Isotropic Mass — A mass having the same property (or properties) in all directions (ASTM).

Laminar Flow — Flow in which the head loss is proportional to the first power of the velocity (ASTM).

Landslide — The failure of a sloped bank of soil or rock in which the movement of the mass takes place along a surface of sliding (ASTM).

Leaching — The removal of soluble soil material and colloids by percolating water (ASTM).

Line of Seepage/Seepage Line/Phreatic Line — The upper free water surface of the zone of seepage (ASTM).

Linear Expansion (L_e, %) — The increase in one dimension of a soil mass, expressed as a percentage of that dimension at the shrinkage limit, when the moisture content is increased from the shrinkage limit to any given moisture content (ASTM).

Linear Shrinkage (L_s, %) — Decrease in one dimension of a soil mass, expressed as a percentage of the original dimension, when the moisture content is reduced from a given value to the shrinkage limit (ASTM).

Liquefaction — The sudden large decrease of the shearing resistance of a cohesionless soil. It is caused by a collapse of the structure by shock or other type of strain and is associated with a sudden but temporary increase of the pore-fluid pressure. It involves a temporary transformation of the material into a fluid mass (ASTM).

Liquid Limit (LL) — The moisture content corresponding to the arbitrary limit between the liquid and plastic states of consistency of a soil [ASTM (a)].

Liquidity Index (LI) — The ratio, expressed as a percentage, of: (1) the natural moisture content of a soil minus its plastic limit, to (2) its plasticity index (ASTM).

Maximum Density — See Density

Mechanical Analysis — See Gradation Analysis

Modulus of Elasticity/Modulus of Deformation (E, M, lbf/in^2 or GPa) — The ratio of stress to strain for a material under given loading conditions; numerically equal to the slope of the tangent or the secant of a stress — strain curve. The use of the term Modulus of Elasticity is recommended for materials that deform in accordance with Hooke's law; the term Modulus of Deformation for materials that deform otherwise (ASTM).

Modulus of Shear Deformation (G, lbf/in^2 or GPa) — The ratio between a given shear stress change and the corresponding shear strain change (all other stresses being constant) (ISSMFE).

Modulus of Subgrade Reaction (k, lbf/in^2/in or kN/m^2/m) — Ratio of: (1) load per unit area of horizontal surface of a mass of soil, to (2) corresponding settlement of the surface. It is determined as the slope of the secant, drawn between the point corresponding to zero settlement and the point of 0.05-inch settlement, of a load settlement curve obtained from a plate load test on a soil using a 30-inch or greater diameter loading plate. It is used in the design of concrete pavements by the Westergaard method (ASTM definition for coefficient of subgrade reaction). (Note: It is used also for beam-on-elastic foundation problems.)

Mohr Circle — A graphical representation of the stresses acting on the various planes at a given point (ASTM).

Mohr Failure Envelope — The envelope of a series of Mohr circles representing stress conditions at failure for a given material. According to Mohr's rupture hypothesis, a rupture envelope is the locus of points the coordinates of which represent the combinations of normal and shear stresses that will cause a given material to fail (ASTM definition for Mohr Envelope).

Moisture Content (w, %) — The ratio expressed as a percentage of: (1) the mass of water in a given soil mass, to (2) the mass of solid particles (ASTM).

Moisture-Density Curve — See Compaction Curve

Moisture-Density Test — See Compaction Test

Moisture-Penetration Resistance Curve — The curve showing the relationship between: (1) the penetration resistance of a soil penetrometer, and (2) the moisture content.

Neutral Stress — See Stress

Normal Stress — See Stress

Normally Consolidated Soil — A soil mass that has never been subjected to an effective stress greater than the existing effective stress.

Optimum Moisture Content (w_o, %) — The moisture content at which a soil can be compacted to the maximum dry unit weight by a given compactive effort (ASTM).

Organic Clay — A clay with sufficient organic content to influence the soil properties.

Organic Silt — A silt with sufficient organic content to influence the soil properties.

Organic Soil — Soil with a high organic content. In general, organic soils are very compressible and have poor load-sustaining properties (ASTM).

Overconsolidation Ratio (OCR) — The ratio of the preconsolidation stress to the present effective stress.

Parent Material — Material from which a soil has been derived (ASTM).

Particle-Size Analysis — See Gradation Analysis

Passive Earth Pressure — See Earth Pressure

Peat — A soil composed primarily of vegetable tissue in various stages of decomposition with an organic odor, a dark brown to black color, a spongy consistency, and a texture ranging from fibrous to amorphous (ASTM D 2487-83).

Penetration Resistance —

Standard Penetration Resistance, N — The number of blows of a 140-lbm hammer falling 30 inches required to produce 1 foot of penetration of a standard 2-inch outside diameter, 1-3/8-inch inside diameter sampler into soil, after an initial 0.5-foot seating.

Cone Penetration Resistance (C_r, lbf/in² or kPa) — The force exerted on a cone with a 60° apex angle and projected area of either 10 cm² or 15 cm² advanced at a rate of 10 to 20 mm/s into soil.

Penetrometer Penetration Resistance (lbf/in² or kPa) — The force required to produce a specified penetration into soil at a specified rate of a soil penetrometer.

Penetration Resistance Curve — See Moisture-Penetration Resistance Curve

Percent Compaction (%) — The ratio, expressed as a percentage, of: (1) dry unit weight of a soil, to (2) maximum dry unit weight obtained in a laboratory compaction test (ASTM).

Percent Saturation (S_r, %) — The ratio, expressed as a percentage, of: (1) the volume of water in a given soil or rock mass, to (2) the total volume of intergranular space (voids) (ASTM).

Perched Water Table — A water table usually of limited area maintained above the normal free water elevation by the presence of an intervening relatively impervious confining stratum (ASTM).

Percolation — See Seepage

Permafrost — Perennially frozen soil (ASTM).

Permeability — The capacity of a rock or soil to conduct liquid or gas (also see Coefficient of Permeability).

pH — An index of the acidity or alkalinity of a soil in terms of the logarithm of the reciprocal of the hydrogen ion concentration (ASTM).

Phreatic Line — See Line of Seepage

Phreatic Water — See Free Water

Piezometer — An instrument for measuring pressure head (ASTM).

Piezometric Line/Equipotential Line — A line along which water will rise to the same elevation in piezometric tubes (ASTM).

Piezometric Surface — The surface at which water will stand in a series of piezometers (ASTM).

Pile — Relatively slender structural element which is driven or otherwise introduced into the soil, usually for the purpose of providing vertical or lateral support (ASTM).

Piping — The progressive removal of soil particles from a mass by percolating water leading to the development of channels (ASTM).

Plastic Flow/Plastic Deformation — The deformation of a plastic material beyond the point of recovery, accompanied by continuing deformation with no further increase in stress (ASTM).

Plastic Behavior — The property of a soil or rock which allows it to be deformed beyond the point of recovery without cracking or appreciable volume change (ASTM definition for plasticity).

Plasticity Index (PI) — Numerical difference between the liquid limit and the plastic limit (ASTM).

Plastic Limit (PL) — The moisture content corresponding to an arbitrary limit between the plastic and the semisolid states of consistency of a soil [ASTM (a)].

Poisson's Ratio (ν) — The ratio between linear strain changes perpendicular to and in the direction of a given uniaxial stress change.

Pore Pressure/Pore Water Pressure — See Neutral Stress under Stress

Porosity (n, %) — The ratio, usually expressed as a percentage, of: (1) the volume of voids of a given soil mass, to (2) the total volume of the soil mass (ASTM).

Potential Drop (h, ft or m) — The difference in total head between two equipotential lines (ASTM).

Preconsolidation Stress — The greatest effective stress to which a soil mass has been subjected.

Pressure (p, lbf/in² or kPa) — The load divided by the area over which it acts (ASTM).

Pressure Bulb — The zone in a loaded soil or rock mass bounded by an arbitrarily selected isobar of stress (ASTM).

Principal Plane — Each of three mutually perpendicular planes through a point in a soil mass on which the shearing stress is zero (ASTM).

Intermediate Principal Plane — The plane normal to the direction of the intermediate principal stress (ASTM).

Major Principal Plane — The plane normal to the direction of the major principal stress (ASTM).

Minor Principal Plane — The plane normal to the direction of the minor principal stress (ASTM).

Proctor Compaction Curve — See Compaction Curve

Proctor Penetration Curve — See Penetration Resistance Curve

Proctor Penetration Resistance — See Penetration Resistance

Progressive Shear Failure — Failure in which the ultimate shearing resistance is progressively mobilized along the failure surface (ASTM definition for Progressive Failure).

Quick Condition/Quicksand — Condition in which water is flowing upward with sufficient velocity to reduce significantly the bearing capacity of the soil through a decrease in intergranular pressure (ASTM).

Rebound — Volume change associated with a decrease in effective stress.

Rebound Curve — The portion of a compression curve relating volume change to decrease in effective stress.

Rebound Index (C_{rb}, units depend on use) — The slope of the rebound portion of a one-dimensional compression curve relating void ratio to the logarithm of effective stress.

$$C_{rb} = -\frac{\Delta e}{\Delta \log \sigma'}$$

where:

Δe = change in void ratio
$\Delta \log \sigma'$ = change in log of effective stress

Recompression — Volume change associated with an increase in effective stress for stresses less than the preconsolidation stress.

Recompression Curve — The portion of a compression curve relating volume change to an increase in effective stress for stresses less than the preconsolidation stress.

Recompression Index (C_{rc}, units depend on use) — The slope of the recompression portion of a one-dimensional compression curve relating void ratio to the logarithm of effective stress.

$$C_{rc} = \frac{\Delta \epsilon}{\Delta \log \sigma'}$$

where:

$\Delta \epsilon$ = change in strain
$\Delta \log \sigma'$ = change in log of effective stress

Relative Density (D_d, %) — The ratio of: (1) the difference between the void ratio of a cohesionless soil in the loosest state and any given void ratio, to (2) the difference between its void ratios in the loosest and in the densest states (ASTM).

Relative Water Content — See Liquidity Index

Remolded Soil — Soil that has had its natural structure modified by manipulation (ASTM).

Rock — Natural solid mineral matter occurring in large masses or fragments (ASTM).

Rotational Shear Test — A shear test in which a relatively thin test specimen of solid circular or annular cross section, usually confined between rings, is subjected to an axial load and to shear in torsion. In-place rotational shear tests may be performed by pressing a dentated solid circular or annular plate against the soil and measuring its resistance to rotation under a given axial load (ASTM definition for Torsional Shear Test).

Sand — Particles of rock that will pass the No. 4 (4.75-mm) U.S.A. Standard sieve and be retained on the No. 200 (75-μm) sieve (similar to ASTM).

Sand Boil — The ejection of sand and water resulting from piping (ASTM).

Seepage — The slow movement of gravitational water through the soil or rock (ASTM).

Seepage Force (J, lbf or N) — The force transmitted to the soil or rock grains by seepage (ASTM).

Seepage Line — See Line of Seepage

Seepage Velocity (V_α, ft/yr or m/s) — The rate of discharge of seepage water through a porous medium per unit area of void space perpendicular to the direction of flow (ASTM).

Shear Failure — Failure in which movement caused by shearing stresses in a soil or rock mass is of sufficient magnitude to destroy or seriously endanger a structure (ASTM).

General Shear Failure — Failure in which the ultimate strength of the soil or rock is mobilized along the entire potential surface of sliding before the structure supported by the soil is impaired by excessive movement (ASTM).

Local Shear Failure — Failure in which the ultimate shearing strength of the soil or rock is mobilized only locally along the potential surface of sliding at the time the structure supported by the soil is impaired by excessive movement (ASTM).

Shear Strength — See Strength

Shear Strain (γ, radians) — The change of the angle between two planes originally perpendicular to each other (ISSMFE).

Shear Stress — See Stress

Shrinkage Limit (SL) — The maximum moisture content at which a reduction in moisture content will not cause a decrease in volume of the soil mass (ASTM).

Shrinkage Ratio (R) — The ratio of: (1) a given volume change, expressed as a percentage of the dry volume, to (2) the corresponding change in moisture content above the shrinkage limit, expressed as a percentage of the mass of the ovendried soil (ASTM).

Silt — Material passing the No. 200 (75-μm) U.S.A. Standard sieve that is nonplastic or very slightly plastic and that exhibits little or no strength when air-dried (ASTM).

Silt Size — That portion of the soil finer than 0.02 mm and coarser than 0.002 mm (0.05 mm and 0.005 mm in some cases) (ASTM).

Skin Friction (f, lbf/in^2 or kPa) — The frictional resistance developed between soil and an element of a structure (ASTM).

Slaking — The process of breaking up or sloughing when an indurated soil is immersed in water (ASTM).

Air Slaking — The process of breaking up or sloughing when an indurated soil is exposed to air.

Slide — See Landslide

Soil — Sediments or other unconsolidated accumulations of solid particles produced by the physical and chemical disintegration of rocks, and which may or may not contain organic matter (ASTM).

Soil-Cement — A mixture of soil, portland cement, and water that (as the cement hydrates), forms a material with a higher strength than the untreated soil. Depending on the amount of water used, it can be placed as a compacted material, as a mortar, or as a slurry.

Soil-Cement Slurry — Soil-cement with a moisture content such that it has the consistency of a thick liquid.

Soil Mechanics — The application of the laws and principles of mechanics and hydraulics to engineering problems dealing with soil as an engineering material (ASTM).

Soil Physics — The organized body of knowledge concerned with the physical characteristics of soil and with the methods employed in their determinations (ASTM).

Soil Profile — Vertical section of a soil, showing the nature and sequence of the various layers, as developed by deposition or weathering, or both (ASTM).

Soil Stabilization — Chemical or mechanical treatment designed to increase or maintain the stability of a mass of soil or otherwise to improve its engineering properties (ASTM).

Soil Structure — The arrangement and state of aggregation of soil particles in a soil mass (ASTM).

Flocculent Structure — An arrangement composed of flocs of soil particles instead of individual soil particles (ASTM).

Honeycomb Structure — An arrangement of soil particles having a comparatively loose, stable structure resembling a honeycomb (ASTM).

Single-Grained Structure — An arrangement composed of individual soil particles; characteristic structure of coarse-grained soils (ASTM).

Soil Suspension — Highly diffused mixture of soil and water (ASTM).

Soil Texture — See Gradation

Specific Gravity —

Specific Gravity of Solids (G_s) — Ratio of: (1) the mass in air of a given volume of solids at a stated temperature, to (2) the mass in air of an equal volume of distilled water at a stated temperature (ASTM).

Apparent Specific Gravity (G_a) — Ratio of: (1) the mass in air of a given volume of the impermeable portion of a permeable material (that is the solid matter including its impermeable pores or voids) at a stated temperature, to (2) the mass in air of an equal volume of distilled water at a stated temperature (ASTM).

Bulk Specific Gravity (Specific Mass Gravity) (G_m) — Ratio of: (1) the mass in air of a given volume of a permeable material (including both permeable and impermeable voids normal to the material) at a stated temperature, to (2) the mass in air of an equal volume of distilled water at a stated temperature (ASTM).

Specific Surface — The surface area per unit of volume of soil particles (ASTM).

Specific Yield — The ratio of: (1) the volume of water that a saturated rock or soil will yield by gravity, to (2) the total volume of the rock or soil.

Standard Penetration Resistance — See Penetration Resistance

Sticky Limit (T_w) — The lowest moisture content at which a soil will stick to a metal blade drawn across the surface of the soil mass (ASTM).

Strain (ϵ) — The change in length per unit of length in a given direction (ASTM).

Strength — The maximum stress which a material can resist without failing for any given type of loading (ISRM).

Compressive Strength (q_u, lbf/in^2 or kPa) — The load per unit area at which an unconfined cylindrical specimen of soil or rock will fail in a simple compression test. Commonly, the failure load is the maximum that the specimen can withstand in the test (ASTM).

Shear Strength (s, lbf/in^2 or kPa) — The maximum resistance of a soil or rock to shearing stresses (ASTM).

Stress (σ, lbf/in^2 or kPa) — The force per unit area acting within the soil mass (ASTM).

Effective Stress (σ') — The average normal force per unit area transmitted from grain to grain of a soil mass (similar to ASTM).

Neutral Stress/Pore Pressure/Pore Water Pressure (u) — Stress transmitted through the pore water (water filling the voids of the soil) (ASTM).

Normal Stress (σ) — The stress component normal to a given plane (ASTM).

Principal Stress (σ_1, σ_2, σ_3) — Stress acting normal to three mutually perpendicular planes intersecting at a point in a body, on which the shearing stress is zero (ASTM).

Major Principal Stress (σ_1) — The largest (with regard to sign) principal stress (ASTM).

Minor Principal Stress (σ_3) — The smallest (with regard to sign) principal stress (ASTM).

Intermediate Principal Stress (σ_2) — The principal stress whose value is neither the largest nor the smallest (with regard to sign) of the three (ASTM).

Shear Stress (τ) — The stress component tangential to a given plane (ASTM).

Total Stress (σ) — The total force per unit area acting within a mass of soil. It is the sum of the neutral and effective stresses (ASTM).

Subbase — A layer used in a pavement system between the subgrade and base course, or between the subgrade and portland cement concrete pavement (ASTM).

Subgrade — The soil prepared and compacted to support a structure or a pavement system (ASTM).

Subgrade Surface — The surface of the earth or rock prepared to support a structure or a pavement system (ASTM).

Swell Pressure (p_s, lbf/in^2 or kPa) — The pressure required to maintain zero expansion.

Thixotropy — The property of a material that enables it to stiffen in a relatively short time on standing, but upon agitation or manipulation to change to a very soft consistency or to a fluid of high viscosity; the process being completely reversible (ASTM).

Time Factor (T_v) — A dimensionless parameter relating the coefficient of consolidation to time and a characteristic length determined by drainage conditions. It is used in linear one-dimensional infinitesimal strain consolidation theory to determine the degree of consolidation as a function of time and space.

$$T_v = C_v \left(\frac{t}{H^2}\right)$$

where:

C_v = coefficient of consolidation
t = time
H = length of drainage path

Topsoil — Surface soil, usually containing organic matter (ASTM).

Transformed Flow Net — A flow net whose boundaries have been properly modified (transformed) so that a net consisting of curvilinear squares can be constructed to represent flow conditions in an anisotropic porous medium (ASTM).

Triaxial Shear Test — A test in which a specimen of soil or rock encased by an impervious membrane is subjected to a confining pressure and then loaded axially to failure (ASTM).

Turbulent Flow — That type of flow in which any water particle may move in any direction with respect to any other particle, and in which the head loss is approximately proportional to the second power of the velocity (ASTM).

Ultimate Bearing Capacity (q_u, ton$_f$/ft^2 or kPa) — The load per unit of area required to produce failure by rupture of a supporting soil or rock mass (similar to ASTM).

Unconfined Compressive Strength — See Strength

Undisturbed Sample — A soil sample that has been obtained by methods in which every precaution has been taken to minimize disturbance to the sample (ASTM).

Unit Weight (γ, lbf/ft^3 or kN/m^3) — Weight per unit volume (ASTM).

Dry Unit Weight (γ_d) — The weight of solid particles per unit of total volume.

Wet Unit Weight (γ_{wet}) — The unit weight of solids plus water per unit volume, irrespective of the degree of saturation.

Maximum Unit Weight (γ_{max}) — The dry unit weight defined by the peak of a compaction curve.

Saturated Unit Weight (γ_{sat}) — The wet unit weight of soil when saturated.

Unit Weight of Water (γ_w) — The weight per unit volume of water.

Uplift (Unit: u, lbf/in^2 or kPa) (Total: (U, lbf or N) — The upward water pressure on a structure (ASTM).

Unload-Reload Cycle — A loading sequence resulting in rebound and recompression.

Vane Shear Test — An in-place shear test in which a rod with thin radial vanes at the end is forced into the soil and the resistance to rotation of the rod is determined (ASTM).

Virgin Compression — Compression corresponding to stresses greater than the preconsolidation stress.

Virgin Compression Curve — The portion of the compression curve corresponding to virgin compression.

Virgin Compression Line — Straight line approximating the virgin compression curve.

Void — Space in a soil or rock mass not occupied by solid mineral matter. This space may be occupied by air, water, or other gaseous or liquid material (ASTM).

Void Ratio (e) — The ratio of: (1) the volume of void space, to (2) the volume of solid particles in a given soil mass (ASTM).

Volumetric Shrinkage (V_s, % — The decrease in volume, expressed as a percentage of the soil mass when dried, of a soil mass when the moisture content is reduced from a given percentage to the shrinkage limit (ASTM).

Wall Friction (f', lbf/in^2 or kPa) — Frictional resistance mobilized between a wall and the soil or rock in contact with the wall (ASTM).

Water Content — See Moisture Content

Water-Holding Capacity — The smallest value to which the moisture content of a soil can be reduced by gravity drainage (ASTM).

Water Plasticity Ratio — See Liquidity Index

Water Table — See Free Water Elevation

Wet Unit Weight — See Unit Weight

Zero Air Voids Curve — The curve showing the relationship between dry unit weights and corresponding moisture contents, assuming that all of the voids are completely filled with water.

NOTES

1. A "prime" (′) applies to effective stress or force.
2. The prefix "Δ" denotes an increment or a change.
3. For SI units:
   kPa is used for pressure and stress, and
   GPa is used for modulus.
4. For SI units:
   N is used for force that would normally be expressed in pounds, and
   kN is used for force that would normally be expressed in tons or kips.
5. For inch-pound system units:
   lbm is used for mass that would normally be expressed in pounds, and
   lbf is used for force that would normally be expressed in pounds.
   lbf represents the expression, mg, where the mass, m , is expressed in lbm and g is the acceleration of gravity. For practical purposes, g is assumed to be constant.

Background References

Geology for Designs and Specifications of the Assistant Commissioner — Engineering and Research, Bureau of Reclamation, Denver, CO, December 1981 (rev. June 1982).

Glossary of Geology, Bates, Robert L., and Julia A. Jackson, eds., 2d ed., American Geological Institute, Falls Church, VA, 1980.

American Society for Testing and Materials, *Annual Book of ASTM Standards*, D 653-82, "Standard Definitions of Terms and Symbols Relating to Soil and Rock Mechanics," vol. 04.08., Philadelphia, PA.

Metric Manual, Bureau of Reclamation, U.S. Government Printing Office, Washington, D.C., 1978.

UNITED STATES DEPARTMENT OF THE INTERIOR
BUREAU OF RECLAMATION

USBR 4617-89

PROCEDURE FOR

CAPPING CYLINDRICAL CONCRETE SPECIMENS

INTRODUCTION

This test procedure is under the jurisdiction of the Concrete and Structural Branch, code D-3730, Research and Laboratory Services Division, Denver Office, Denver, Colorado. The procedure is issued under the fixed designation USBR 4617; the number immediately following the designation indicates year of original adoption or year of last revision. This test procedure is a modified version of ASTM designation: C 617-84.

1. Scope

1.1 This designation covers the apparatus, materials, and procedures for capping freshly molded (2 to 4 hours after molding) concrete cylinders with neat cement and hardened cylinders and drilled concrete cores with high-strength gypsum plaster or sulfur mortar.

1.2 The cap shall have a compressive strength equal to or greater than the compressive strength of the concrete to be tested. When this is not possible, planeness of the ends of specimens shall be obtained by sawing or grinding. The surfaces of capped compression specimens shall be plane within a tolerance of 0.002 inch (0.05 mm) across any diameter.

2. Auxiliary Tests

2.1 The requirement that capping materials for hardened specimens must equal or exceed the anticipated compressive strength of the cylinder shall be assured by compliance with procedures as outlined under ASTM C 472 and USBR 4109 (also covered in section 5.2.2.1).

3. Applicable Documents

3.1 *USBR Procedures*:
4109 Compressive Strength of Hydraulic Cement Mortars Using 2-Inch or 50-Millimeter Cube Specimens
4305 Mechanical Mixing of Hydraulic Cement Pastes and Mortars of Plastic Consistency

3.2 *ASTM Standards*:
C 150 Standard Specification for Portland Cement[1,2]
C 230 Standard Specification for Flow Table for Use in Tests of Hydraulic Cement[1,2]
C 472 Standard Methods for Physical Testing of Gypsum Plasters and Gypsum Concrete[1]
C 617 Standard Practice for Capping Cylindrical Concrete Specimens[2]
E 18 Standard Test Methods for Rockwell Hardness and Rockwell Superficial Hardness of Metallic Materials[3]

3.3 *ANSI Standards*:
B46.1 Standard for Surface Texture[4]

4. Apparatus

4.1 *Competency of Capping Material*:

4.1.1 The apparatus used to make cubes such as scales, glass graduates, specimen molds, mixer bowl and paddle, flow table and flow mold, tamper, trowel, and testing machine are described in USBR 4109; with further reference to USBR 4305 for mixer bowl and paddle; and to ASTM C 230 for flow table and flow mold.

4.1.2 Additional equipment required under the procedure for molding high-strength, gypsum-plaster cubes is the Vicat apparatus described in ASTM C 472.

4.1.3 An acceptable mold is shown on figure 1.

4.2 *Capping Equipment*:

4.2.1 *Capping Plates.*–Neat cement caps and high-strength, gypsum-plaster caps shall be formed against a glass plate at least 1/4 inch (6 mm) thick, a machined metal plate at least 1/2 inch (13 mm) thick, or a polished plate of granite or diabase at least 3 inches (76 mm) thick. Sulfur mortar caps shall be formed against similar metal or stone plates. In all cases, plates shall be at least 1 inch (25 mm) greater in diameter than test specimen, and working surfaces shall not depart from a plane by more than 0.002 inch (0.05 mm) in 6 inches (152 mm). The surface roughness of newly finished metal plates shall not exceed that set forth in table 4 of American National Standard B46.1, which is 125 μ inch (3.175 μm) for any type of surface and direction of lay. The surface, when new, shall be free of gouges, grooves, or indentations beyond those caused by finishing operation. Metal plates that have been in use shall be free of any gouges, grooves, and indentations greater than 0.010 inch (0.25 mm) deep or greater than 0.05 in^2 (32 mm^2) in surface area. If a recess is machined into the metal plate, thickness of plate beneath recessed area shall be at least 1/2 inch (13 mm). In no case shall recess in plate be deeper than 1/2 inch.

NOTE 1.–In vertical capping devices, the use of two-piece metal capping plates is advantageous as this facilitates refinishing of

[1] *Annual Book of ASTM Standards*, vol. 04.01.
[2] *Annual Book of ASTM Standards*, vol. 04.02.
[3] *Annual Book of ASTM Standards*, vols. 02.03, 03.01.
[4] Available from American National Standards Institute, 1430 Broadway, New York, NY 10018.

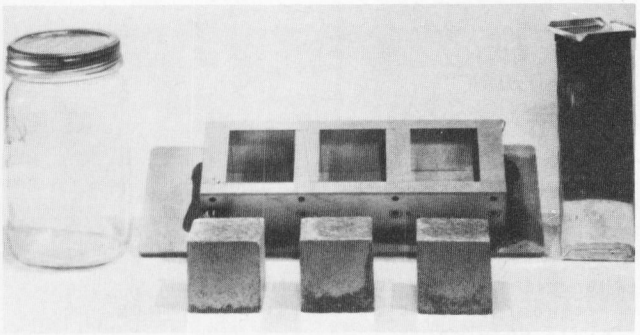

Figure 1. – Three-gang mold for 2-inch or 50-millimeter cube specimens.

capping surface should it become necessary to do so. In such devices, lower section is a solid plate and upper section has a circular hole which forms recess. The two sections are customarily fastened together with machine screws. It is also advantageous to have upper surface of lower plate case hardened. A Rockwell hardness of 48 HRC is suggested as defined in ASTM E 18.

4.2.2 *Alignment Devices.*–Suitable alignment devices such as guide bars or bull's-eye levels shall be used in conjunction with capping plates to ensure that no single cap will depart from perpendicularity to the axis of a cylindrical specimen by more than 0.25°, approximately equivalent to 1/16 inch in 12 inches (1.6 mm in 305 mm). A typical alignment device is shown on figure 2. The same requirement is applicable to the relationship between axis of alignment device and surface of capping plate when guide bars are used. In addition, location of each bar with respect to its plate must be such that no cap will be off-centered on a test specimen by more than 1/16 inch (1.6 mm).

4.2.3 *Melting Pots for Sulfur Mortars.*–Pots used for melting sulfur mortars shall be equipped with automatic temperature controls, and shall be made of metal or lined with a material that is nonreactive with molten sulfur.

NOTE 2.–***Caution:*** Melting pots equipped with peripheral heating will ensure against accidents during reheating of cooled sulfur mixtures that have a crusted-over surface. When using melting pots not so equipped, a buildup of pressure under hardened surface crust on subsequent reheating may be avoided by use of a metal rod which contacts bottom of pot and projects above surface of fluid sulfur mix as it cools. The rod should be of sufficient size to conduct enough heat to the top to melt a ring around rod first, and thus prevent development of pressure. A large metal ladle can be substituted for rod.

NOTE 3.–Sulfur melting pots should be used under an exhaust hood. Heating over an open flame is dangerous because flash point of sulfur is about 440 °F (227 °C), and mixture can ignite due to overheating. Should mixture start to burn, cover to snuff out flame. The pot should be recharged with fresh material after flame has been extinguished.

4.2.4 *Concrete Saw or Grinder.*–If ends of hardened cylinders are not planar to a degree that thickness of cap will not exceed 5/16 inch (7.94 mm) for any portion, cylinders must be ground or sawed.

4.2.5 *Small Tools.*–Straightedge; feeler gauge, 0.002 inch (0.05 mm); metal thermometer, 265 °F (129 °C) range; steel file; wire brush; rawhide hammer; burlap sacks; and polyethylene sheeting.

5. Capping Materials

5.1 *Fresh Specimens.*–The top surface of freshly molded specimens may be capped 2 to 4 hours after molding with a thin layer of stiff portland cement paste. The portland cement shall conform to requirements of ASTM C 150.

5.2 *Hardened Specimens (Moist-Cured).*–Hardened specimens which have been moist cured may be capped with high-strength, gypsum plaster or sulfur mortar meeting the requirements of 5.2.1 and 5.2.2. The strength of capping material shall be determined on receipt of a new lot and at intervals not exceeding 3 months. If a given lot of capping material fails to conform to strength requirements, it shall not be used, and strength tests of replacement material shall be made weekly until four consecutive determinations conform to specifications requirements.

5.2.1 *High-Strength, Gypsum Plaster.*–Unadulterated, neat, high-strength, gypsum plaster may be used if 2-inch (50-mm) cubes are found to develop a strength as specified under section 1.2, when subjected to same environment for same length of time as capped specimens. The cubes shall be made in accordance with procedure for molding specimens in section 14.2 of ASTM C 472 using same percentage of mixing water used in preparing capping material.

NOTE 4.–Low-strength molding plasters, commonly called plaster of paris, or mixtures of plaster and portland cement are unsuitable for capping specimens.

NOTE 5.–The percent of mixing water, based on mass of dry plaster, should be between 26 and 30. Use of minimum percentages of mixing water and vigorous mixing usually permit development of acceptable strength after 1 or 2 hours.

5.2.2 *Sulfur Mortar.*–Proprietary or laboratory prepared sulfur mortars may be used if allowed to harden until their compressive strength is at least as high as the compressive strength of the concrete being tested.

5.2.2.1 *Determination of Compressive Strength.*–Prepare test specimens using a cube mold and base plate (fig. 1) conforming to requirements of USBR 4109, and a metal cover plate (note 6) conforming in principle to design shown on figure 3. Bring various parts of apparatus to a temperature of 68 to 86 °F (20 to 30 °C), lightly coat surfaces that will be in contact with sulfur mortar with mineral oil, and assemble near melting pot. Bring temperature of molten-sulfur mortar in pot within a range of 265 to 290 °F (129 to 143 °C), stir thoroughly, and begin casting cubes. Using a ladle or other suitable pouring device, quickly fill each of the three compartments until molten material reaches top of filling hole. Allow sufficient time for maximum shrinkage, due to cooling, and solidification to occur (about 15 min), and refill each hole

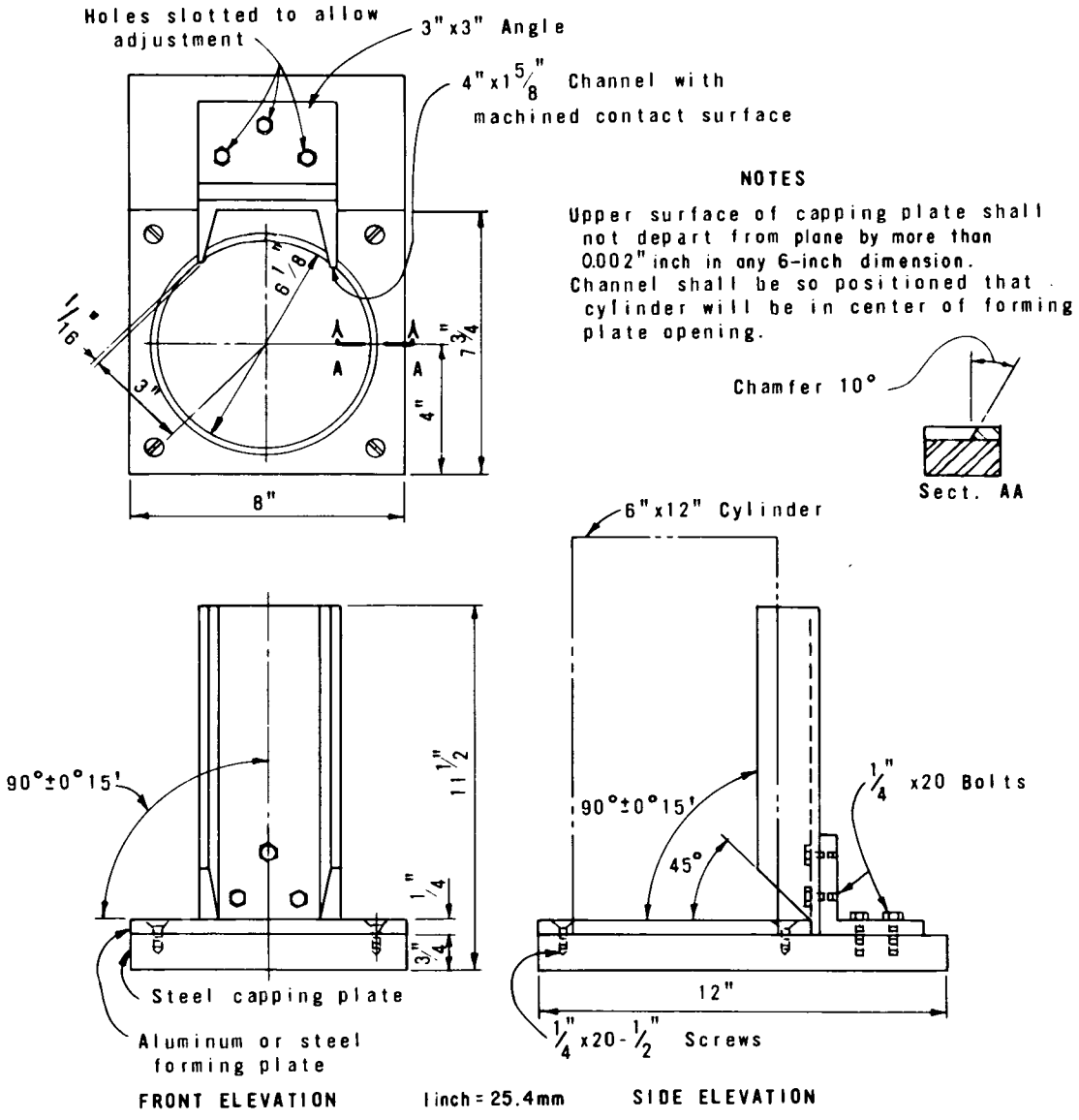

Figure 2. – Cylinder capping mold and alignment device.

with molten material (note 7). After solidification is complete, remove cubes from mold without breaking off knob formed by the filling hole in cover plate. Remove oil, sharp edges, and fins from cubes and check planeness of bearing surfaces in manner described in note 5 of USBR 4109. After storage at room temperature, test cubes in compression at intervals of 30 minutes to 2 hours following procedure described in section 11.6.3 of USBR 4109, and calculate compressive strength in pound force per square inch (megapascals).

NOTE 6.–If desired, a plane phenol formaldehyde (bakelite) plate of 1/8-inch (3-mm) thickness, provided with three appropriately spaced filling holes, may be inserted between cover plate and mold to slow rate of cooling of test specimens.

NOTE 7.–The second filling helps prevent formation of a large void or shrinkage pipe in body of cube. However, such defects may occur no matter how much care is exercised, and it therefore is advisable to inspect interior of tested sulfur mortar cubes for homogeneity whenever strength values obtained are significantly lower than anticipated.

5.3 *Hardened Specimens (Air-Dried).*–Hardened specimens which must be tested in an air-dry condition, or must be soaked for 20 to 28 hours before testing, may be capped with sulfur mortar conforming to requirements of section 5.2.2.

6. Precautions

6.1 This test procedure may involve hazardous materials, operations, and equipment, and does not claim to address all safety problems associated with its use. It is the responsibility of the user to consult and establish appropriate safety and health practices and determine applicability of regulatory limitations prior to use.

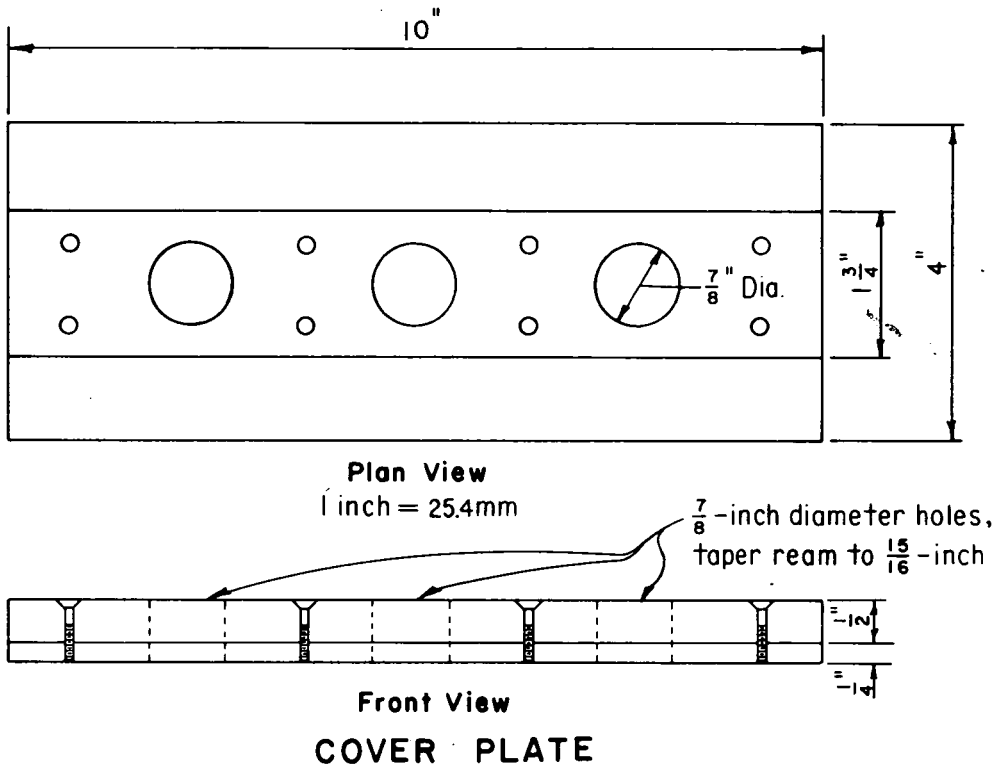

Figure 3. - Cover plate for 2-inch or 50-millimeter cube mold used when fabricating cubes of capping materials. From ASTM C 617, volume 04.02, 1984.

6.2 Safety clothing shall be worn when capping with sulfur mortar materials: safety glasses and full face shield, leather gloves with gauntlets, plastic or rubber apron, and safety shoes.

6.3 Specific precautions with sulfur melting pots are given in notes 2 and 3 of section 4.2.3 and note 10 of section 9.2.3.

7. Calibration or Standardization

7.1 *Capping Devices*:

7.1.1 Dimensions of plates and surface planarity shall be checked periodically for compliance with section 4.2.1.

7.1.2 The alignment devices shall be checked periodically for perpendicularity both to axis of a cylindrical specimen and to surface of capping plate for compliance with section 4.2.2.

7.2 *Miscellaneous Equipment*:

7.2.1 *Straightedge.*-Check periodically with a known flat surface (lower platen of a testing machine suggested).

7.2.2 *Feeler Gauge.*-Accept certificate of inspection by manufacturer.

7.2.3 *Thermometer.*-Accept certificate of inspection by manufacturer. Check against at least one other thermometer.

7.3 *Capping Materials*:

7.3.1 *Portland Cement.*-Conformance with ASTM C 150 shall be assured by a review of mill test for each shipment received.

7.3.2 *High-Strength Gypsum Plaster.*-Compliance with strength requirements shall be performed in accordance with section 5.2.1 upon receipt of each new lot of capping material, and at intervals not exceeding 3 months as outlined under section 5.2.

7.3.3 *Sulfur Mortar.*-Compliance with strength requirements shall be performed in accordance with sections 5.2.2 and 5.2.2.1 upon receipt of each new lot of capping material, and at intervals not exceeding 3 months as outlined under section 5.2.

7.4 *Capped Specimens.*-For each day's capping operation, planeness of caps on at least three specimens representing start, middle, and end of run shall be checked using a straightedge and feeler gauge, making a minimum of three measurements on different diameters to ensure surfaces of caps do not depart from being plane by more than 0.002 inch (0.05 mm).

8. Conditioning

8.1 *Fresh Molded Specimens*:

8.1.1 *Before Capping.*-Do not apply neat paste to exposed end until concrete has ceased settling in molds, generally from 2 to 4 hours after molding.

8.1.2 *After Capping.*-Cover capping plate and mold with damp burlap and a polyethylene sheet to prevent drying for a time as suggested in section 9.1.

8.1.3 *Before Testing.*-Store in moist condition for 6 days with Type I neat cement or for 2 days with Type III neat cement as outlined under note 8 of section 9.1.

8.2 *Hardened Concrete Specimens (Moist-Cured)*:

8.2.1 *High-Strength Gypsum Plaster*:

8.2.1.1 *Before Capping.*–No further conditioning required.

8.2.1.2 *After Capping.*–Moist-cured specimens shall be maintained in a moist condition between completion of capping and time of testing by returning them to moist storage or wrapping with a double layer of wet burlap. Specimens with gypsum plaster caps shall not be immersed in water and shall not be stored in a moist room for more than 4 hours. If stored in a moist room, gypsum plaster caps shall be protected against water dripping on their surfaces.

8.2.2 *Sulfur Mortar*:

8.2.2.1 *Before Capping.*–The ends of moist-cured specimens shall be dry enough at time of capping to comply with directions as outlined under section 9.2.3. The ends of the specimen shall not be oiled prior to application of cap. Heat sulfur mortar as outlined under section 9.2.3.

8.2.2.2 *After Capping.*–Moist-cured specimens shall be maintained in a moist condition between completion of capping and time of testing by returning them to moist storage or wrapping with a double layer of wet burlap.

8.3 *Hardened Concrete Specimens (Air-Dried)*:

8.3.1 No conditioning required if specimens are to be tested in an air-dry condition.

8.3.2 If specimens are to be tested in a moist condition, they must be soaked from 20 to 28 hours before testing, as cited in section 5.3.

8.4 *Capping Material*:

8.4.1 *Neat Cement Paste.*–Mix neat cement paste to a stiff consistency 2 or 4 hours before paste is to be used, as outlined under section 9.1.

8.4.2 *High-Strength Gypsum Plaster*:

8.4.2.1 Mix high-strength gypsum plaster for capping using same percentage of mixing water used in qualification test described in section 5.2.1.

8.4.2.2 The gypsum plaster cubes shall be subjected to same environment for same length of time as gypsum plaster capped specimens, as outlined under section 5.2.1.

8.4.3 *Sulfur Mortar*:

8.4.3.1 Fresh sulfur mortar must be dry when placed in pot as dampness may cause foaming, as discussed under section 9.2.3.

8.4.3.2 Keep water away from molten sulfur mortar because of the tendency to foam, as discussed under section 9.2.3.

8.4.3.3 Heat to about 265 °F (129 °C), as outlined under section 5.2.2.1.

8.4.3.4 Proprietary or laboratory prepared sulfur mortars must be allowed to harden, as outlined under section 5.2.2.

8.4.3.5 After initial filling of cube mold with molten sulfur (5.2.2.1) to determine adequacy of sulfur mortar caps (5.2.2), allow sufficient time for maximum shrinkage (about 15 min) before final filling. Store at room temperature for 30 minutes to 2 hours before starting compression testing.

8.5 *Capping Device.*–The capping plate or device should be oiled and warmed before use, as discussed under section 9.2.3.

9. Procedures

9.1 *Freshly Molded Cylinders.*–Use only neat portland cement pastes (note 8) to cap freshly molded cylinders. Make caps as thin as practicable. Do not apply paste to exposed end until concrete has ceased settling in molds, generally from 2 to 4 hours after molding. During molding of cylinder, strike off upper end even with or slightly below the plane of the mold's rim. Mix neat paste to a stiff consistency 2 to 4 hours before using to allow paste to go through period of initial shrinkage. The strength of the paste will depend on the consistency, water-cement ratio, curing, and brand and type of cement. For Type I and Type II cement pastes, optimum consistency is generally produced at a water-cement ratio of 0.32 to 0.36 by mass. For Type III cement, the water-cement ratio should generally be between 0.35 and 0.39 by mass. The paste will stiffen during the 2- to 4-hour waiting period and the use of retempering water is not recommended. However, if retempering water is used, the amount should not increase the water-cement ratio by more than 0.05 by mass. Remove free water and laitance from top of specimen immediately before capping. Form cap by placing a conical mound of paste on specimen and then gently pressing a freshly oiled capping plate on the conical mound until plate contacts rim of mold. A very slight twisting motion may be required to remove excess paste and minimize air voids in the paste. The capping plate must not rock during this operation. Carefully cover capping plate and mold with a double layer of damp burlap and a polyethylene sheet to prevent drying. Removal of capping plate after hardening may be accomplished by tapping edge with a rawhide hammer in a direction parallel to plane of cap.

NOTE 8.–Type I neat cement caps generally require at least 6 days to develop acceptable strength, and Type III caps at least 2 days. Dry concrete specimens will absorb water from freshly mixed neat cement paste and produce unsatisfactory caps. Neat cement paste caps will shrink and crack on drying and; therefore, should be used only for specimens which are to be moist cured continuously until time of testing.

9.2 *Hardened Concrete Specimens*:

9.2.1 *General.*–Cap, saw, or grind ends of hardened cylinders that are not plane within 0.002 inch (0.05 mm) to meet that tolerance. Caps should be about 1/8 inch (3 mm) thick, and in no instance shall any part of a cap be more than 5/16 inch (7.94 mm) thick. If either or both ends of a specimen have coatings or deposits of oily or waxy materials that would interfere with bond of cap, remove such coatings or deposits. If necessary, ends of a specimen may be slightly roughened with a steel file or wire brush to produce proper adhesion of cap. If desired, capping plates may be coated with a thin layer of mineral oil or grease to prevent capping material from adhering to surface of plate. Before testing cylinder, cap should be

tested for air pockets by tapping it lightly with handle of a putty knife or other suitable instrument. A cap that sounds hollow at any point should be removed and replaced. Solid caps are easily obtained when capping surface is dry and clean, mixture is at right temperature, and cylinder is placed immediately in melted mixture on capping plate.

9.2.2 *Capping With High-Strength Gypsum Plaster.*–Mix high-strength plaster for capping by using same percentage of mixing water used for qualification test described in 5.2.1.

9.2.3 *Capping With Sulfur Mortar.*–Prepare the sulfur mortar by heating to about 265 °F (129 °C), as periodically determined by an all-metal thermometer inserted near center of mass. Empty pot and recharge with fresh material at frequent enough intervals to ensure oldest material in pot has not been used more than five times (note 9). Fresh sulfur mortar must be dry when placed in pot as dampness may cause foaming. Keep water away from molten sulfur mortar for same reason. The capping plate or device should be warmed slightly before use to slow rate of hardening and permit production of thin caps. Oil capping plate lightly and stir molten sulfur mortar immediately prior to pouring each cap. The ends of moist-cured specimens shall be dry enough at time of capping to preclude formation of steam or foam pockets larger than 1/4 inch (6 mm) in diameter under or in cap. To ensure that the cap shall be bonded to surface of specimen, end of specimen shall not be oiled prior to application of cap.

NOTE 9.–Reuse of material must be restricted to minimize loss of strength and pourability occasioned by contamination of mortar with oil and miscellaneous debris, and loss of sulfur through volatilization.

NOTE 10.–Hydrogen sulfide gas may be produced during capping when sulfur mortar is contaminated with organic materials such as paraffin or oil. The gas is colorless and has the notoriously bad odor of rotten eggs; however, this odor should not be relied upon as a warning sign because the sensitivity to the odor disappears rapidly on exposure. High concentrations of this gas are lethal, and less concentrated dosages may produce nausea, stomach distress, dizziness, headache, or irritation of the eyes. For these and other reasons, it is desirable that melting pot be located under a hood or near an exhaust fan and that the capping area be well ventilated.

10. Calculations

10.1 Sample calculations for determining the planeness of ends of hardened cylinders and the planeness of capped compression specimens are shown on figure 4.

10.2 Calculations for compressive strength of gypsum plaster cubes to determine competency for capping material are discussed in ASTM C 472.

10.3 Calculations for compressive strength of sulfur mortar cubes to determine competency for capping material are shown on figures 2 and 3 of USBR 4109.

11. Report

11.1 No report is necessary covering this test procedure.

11.2 If a compressive strength exceeds anticipated strength or the strength of the capping material, this fact should be noted on the compressive strength report on the specimens.

12. Precision and Bias

12.1 Due to the nature of this procedure, statements on precision and bias are not appropriate.

Spec. or Solic. No. PRECONSTRUCTION	Structure DAM	Tested by K. FORBES	Date 10-31-86
Project PSMBP	Item MIX DESIGN Location DENVER LAB	Computed by NA	Date
Feature BUFFALO BILL DAM & SPILLWAY MOD.	Station ~ Offset ~ Depth ~ to ~	Checked by NA	Date

CAPPING CYLINDRICAL CONCRETE SPECIMENS

Specimen No.	1		2		3	
Specimen Identification	M-7700-1		M-7700-5		M-7700-7	
	Inch	Millimeter	Inch	Millimeter	Inch	Millimeter
TOP						
Measurement No. 1	0.0019		0.0020		0.0010	
Measurement No. 2	0.0000		0.0010		0.0000	
Measurement No. 3	0.0017		0.0012		0.0020	
BOTTOM						
Measurement No. 1	0.0010		0.0010		0.0008	
Measurement No. 2	0.0020		0.0000		0.0000	
Measurement No. 3	0.0010		0.0010		0.0010	
Remarks: 6- by 12-inch cylinders						

Specimen Identification						
TOP						
Measurement No. 1						
Measurement No. 2						
Measurement No. 3						
BOTTOM						
Measurement No. 1						
Measurement No. 2						
Measurement No. 3						
Remarks:						

Note: No measurement to exceed 0.002 inch (0.05 mm).

Figure 4. – Planeness of capped compression specimens.

UNITED STATES DEPARTMENT OF THE INTERIOR
BUREAU OF RECLAMATION

USBR 5000-86

PROCEDURE FOR

DETERMINING UNIFIED SOIL CLASSIFICATION (LABORATORY METHOD)

INTRODUCTION

This procedure is under the jurisdiction of the Geotechnical Services Branch, code D-3760, Research and Laboratory Services Division, Denver Office, Denver, Colorado. The procedure is issued under the fixed designation USBR 5000. The number immediately following the designation indicates the year of acceptance or the year of last revision.

This procedure is similar to ASTM D 2487 Standard Test Method for Classification of Soils for Engineering Purposes, except for the following: (a) change in title and format, (b) references to USBR procedures, (c) note 1 in ASTM D 2487 is a required section in this procedure, (d) the dry method of preparation (app. X4) should be used except for special cases, (e) maximum particle size is to be expressed in millimeters, (f) the set of sieves required in subparagraph 9.7 was changed to the sieves normally used in USBR laboratories, (g) addition of appendix X5 on "Abbreviated Soil Classification Symbols," (h) moisture content is used instead of water content and mass is substituted for weight, and (i) the minimum specimen sizes required in subparagraph 7.2 were changed to conform with USBR policy.

For circumstances where it may be required or expedient to use ASTM standards, the use of ASTM D 2487 or D 2488 may be substituted for USBR 5000 or 5005. However, it must be stated clearly in written discussions, tables, figures, and logs that the ASTM standards were used.

1. Scope

1.1 This method describes a system for classifying mineral and organo-mineral soils for engineering purposes based on laboratory determination of particle-size characteristics, liquid limit, and plasticity index and shall be used when precise classification is required.

1.2 Use of this procedure will result in a single classification group symbol and group name except when a soil contains 5 to 12 percent fines or when the plot of the liquid limit and plasticity index values falls into the cross-hatched area of the plasticity chart (see fig. 3). In these two cases, a dual symbol is used (e.g., GP-GM, CL-ML). When laboratory test results indicate that the soil is close to another soil classification group, the borderline condition can be indicated with two symbols separated by a slash. The first symbol should be the one based on this standard (e.g., CL/CH, GM/SM, SC/CL).

Borderline symbols are particularly useful when the liquid limit value of clayey soils is close to 50. These soils can have expansive characteristics, and the use of a borderline symbol (CL/CH, CH/CL) will alert the user of the assigned classifications of expansive potential.

1.3 The group symbol portion of this system is based on laboratory tests performed on the portion of a soil sample passing the 3-inch U.S.A. Standard series sieve (75-mm sieve, see ASTM E 11).

1.4 As a classification system, this method is limited to naturally occurring soils.

NOTE 1.–The group names and symbols used in this procedure may be used as a descriptive system applied to such materials as shale, claystone, shells, crushed rock, etc. (see app. X2).

1.5 This method is for qualitative application only.

NOTE 2.–When quantitative information is required for detailed designs of important structures, this procedure must be supplemented by laboratory tests or other quantitative data to determine performance characteristics under expected field conditions.

1.6 The system is based on the widely recognized Unified Soil Classification System which was adopted by several U.S. Government agencies in 1952 as an outgrowth of the Airfield Classification System developed by Casagrande[1].[1]

2. Applicable Documents

2.1 *USBR Procedures*:

USBR 3900 Standard Definitions of Terms and Symbols Relating to Soil Mechanics
USBR 5005 Determining Unified Soil Classification (Visual Method)
USBR 5205 Preparing Soil Samples by Splitting or Quartering
USBR 5300 Determining Moisture Content of Soil and Rock by the Oven Method
USBR 5325 Performing Gradation Analysis of Gravel Size Fraction of Soils
USBR 5330 Performing Gradation Analysis of Fines and Sand Size Fraction of Soils, Including Hydrometer Analysis
USBR 5335 Performing Gradation Analysis of Soils Without Hydrometer — Wet Sieve

[1] Number in brackets refers to the reference.

USBR 5350 Determining the Liquid Limit of Soils by the One-Point Method
USBR 5355 Determining the Liquid Limit of Soils by the Three-Point Method
USBR 5360 Determining the Plastic Limit and Plasticity Index of Soils

2.2 *ASTM Standards*:
C 117 Test for Materials Finer Than 75-μm (No. 200) Sieve in Mineral Aggregates by Washing
C 136 Method for Sieve Analysis of Fine and Coarse Aggregates
D 1140 Method for Amount of Material in Soils Finer Than the No. 200 (75-μm) Sieve
D 2217 Method for Wet Preparation of Soil Samples for Particle-Size Analysis and Determination of Soil Constants
D 2487 Classification of Soils for Engineering Purposes
D 2488 Description of Soils (Visual-Manual Procedure)
E 11 Standard Specification for Wire-Cloth Sieves for Testing Purposes

3. Summary of Method

3.1 As illustrated in table 1, this classification system identifies three major soil divisions: coarse-grained soils, fine-grained soils, and highly organic soils. These 3 divisions are further subdivided into a total of 15 basic soil groups.

3.2 Based on the results of prescribed laboratory tests, a soil is cataloged according to the basic soil groups, assigned a group symbol(s) and name, and thereby classified. The flowcharts, figure 1 for fine-grained soils and figure 2 for coarse-grained soils, can be used to assign the appropriate group symbol(s) and name.

4. Significance and Use

4.1 The procedure described classifies soils from any geographic location into categories representing the results of prescribed laboratory tests to determine the particle-size characteristics and the liquid limit and plasticity index.

4.2 The assigning of a group name and symbol(s) along with the descriptive information required in USBR 5005 can be used to describe a soil to aid in the evaluation of its significant properties for engineering use.

4.3 The various groupings of this classification system have been devised to correlate in a general way with the engineering behavior of soils. This procedure provides a useful first step in any field or laboratory investigation for geotechnical engineering purposes.

4.4 The procedure may be used as an aid in training personnel in the use of USBR 5005.

5. Terminology

5.1 Definitions are in accordance with USBR 3900. Terms of particular significance are:

5.1.1 *Boulder.*–A particle of rock that will not pass a 12-inch (300-mm) square opening.

5.1.2 *Cobble.*–A particle of rock that will pass a 12-inch (300-mm) square opening and be retained on a 3-inch (75-mm) U.S.A. Standard sieve.

5.1.3 *Peat.*–A soil composed primarily of vegetable tissue in various stages of decomposition with an organic odor, a dark brown to black color, a spongy consistency, and a texture ranging from fibrous to amorphous (ASTM 2487-83).

5.1.4 *Coefficient of Curvature (Cc).*–The ratio $(D_{30})^2/(D_{10} \times D_{60})$, where D_{60}, D_{30}, and D_{10} are the particle diameters corresponding to 60, 30, and 10 percent finer on the cumulative graduation curve, respectively.

5.1.5 *Coefficient of Uniformity (Cu).*–The ratio $(D_{60}/D_{10}$, where D_{60} and D_{10} are the particle diameters corresponding to 60 and 10 percent finer on the cumulative graduation curve, respectively.

5.2 *Terms Specific to This Designation*:

5.2.1 *Gravel.*–Particles of rock that will pass a 3-inch (75-mm) U.S.A. Standard sieve and be retained on a No. 4 (4.75-mm) sieve with the following subdivisions:

Coarse —Passes 3-inch (75-mm) sieve and retained on 3/4-inch (19.0-mm) sieve
Fine —Passes 3/4-inch (19.0-mm) sieve and retained on No. 4 (4.75-mm) sieve

5.2.2 *Sand.*–Particles of rock that will pass a No. 4 (4.75-mm) sieve and be retained on a No. 200 (75-μm) sieve with the following subdivisions:

Coarse —Passes No. 4 (4.75-mm) sieve and retained on No. 10 (2.00-mm) sieve
Medium —Passes No. 10 (2.00-mm) sieve and retained on No. 40 (425-μm) sieve
Fine —Passes No. 40 (425-μm) sieve and retained on No. 200 (75-μm) sieve

5.2.3 *Clay.*–Soil passing the No. 200 (75-μm) U.S.A. Standard sieve that exhibits plasticity (putty-like properties) within a range of moisture contents, and which exhibits considerable strength when air-dried. For classification, a clay is a fine-grained soil, or the fine-grained portion of a soil, with a plasticity index equal to or greater than 4 and the plot of plasticity index versus liquid limit falls on or above the "A"-line.

5.2.4 *Silt.*–Material passing the No. 200 (75-μm) U.S.A. Standard sieve that is nonplastic or very slightly plastic and that exhibits little or no strength when air-dried (ASTM). For classification, a silt is a fine-grained soil, or the fine-grained portion of a soil, with a plasticity index less than 4 or the plot of plasticity index versus liquid limit falls below the "A"-line.

5.2.5 *Organic Clay.*–A clay with sufficient organic content to influence the soil properties. For classification, an organic clay is a soil that would be classified as a clay except that its liquid limit value after ovendrying is less than 75 percent of its liquid limit value before ovendrying.

5.2.6 *Organic Silt.*–A silt with sufficient organic content to influence the soil properties. For classification, an organic silt is a soil that would be classified as a silt except that its liquid limit value after ovendrying is less than 75 percent of its liquid limit value before ovendrying.

6. Apparatus

6.1 In addition to the apparatus that may be required

Table 1. - Soil classification chart - laboratory method.

CRITERIA FOR ASSIGNING GROUP SYMBOLS AND GROUP NAMES USING LABORATORY TESTS [a]				SOIL CLASSIFICATION	
				GROUP SYMBOL	GROUP NAME [b]
COARSE-GRAINED SOILS more than 50% retained on No. 200 sieve	GRAVELS More than 50% of coarse fraction retained on No. 4 sieve	CLEAN GRAVELS Less than 5% fines [c]	$Cu \geq 4$ and $1 \leq Cc \leq 3$ [e]	GW	Well-graded gravel [f]
			$Cu < 4$ and/or $1 > Cc > 3$ [e]	GP	Poorly graded gravel [f]
		GRAVELS WITH FINES More than 12% fines [c]	Fines classify as ML or MH	GM	Silty gravel [f,g,h]
			Fines classify as CL or CH	GC	Clayey gravel [f,g,h]
	SANDS 50% or more of coarse fraction passes No. 4 sieve	CLEAN SANDS Less than 5% fines [d]	$Cu \geq 6$ and $1 \leq Cc \leq 3$ [e]	SW	Well-graded sand [i]
			$Cu < 6$ and/or $1 > Cc > 3$ [e]	SP	Poorly graded sand [i]
		SANDS WITH FINES More than 12% fines [d]	Fines classify as ML or MH	SM	Silty sand [g,h,i]
			Fines classify as CL or CH	SC	Clayey sand [g,h,i]
FINE-GRAINED SOILS 50% or more passes the No. 200 sieve	SILTS AND CLAYS Liquid limit less than 50	inorganic	PI > 7 and plots on or above "A" line [j]	CL	Lean clay [k,l,m]
			PI < 4 or plots below "A" line [j]	ML	Silt [k,l,m]
		organic	$\frac{\text{Liquid limit - oven dried}}{\text{Liquid limit - not dried}} < 0.75$	OL	Organic clay [k,l,m,n] Organic silt [k,l,m,o]
	SILTS AND CLAYS Liquid limit 50 or more	inorganic	PI plots on or above "A" line	CH	Fat clay [k,l,m]
			PI plots below "A" line	MH	Elastic silt [k,l,m]
		organic	$\frac{\text{Liquid limit - oven dried}}{\text{Liquid limit - not dried}} < 0.75$	OH	Organic clay [k,l,m,p] Organic silt [k,l,m,q]
Highly organic soils		Primarily organic matter, dark in color, and organic odor		PT	Peat

a. Based on the material passing the 3-in (75-mm) sieve.
b. If field sample contained cobbles and/or boulders, add "with cobbles and/or boulders" to group name.
c. Gravels with 5 to 12% fines require dual symbols
   GW-GM well-graded gravel with silt
   GW-GC well-graded gravel with clay
   GP-GM poorly graded gravel with silt
   GP-GC poorly graded gravel with clay
d. Sands with 5 to 12% fines require dual symbols
   SW-SM well-graded sand with silt
   SW-SC well-graded sand with clay
   SP-SM poorly graded sand with silt
   SP-SC poorly graded sand with clay
e. $Cu = D_{60}/D_{10}$ $Cc = \frac{(D_{30})^2}{D_{10} \times D_{60}}$
f. If soil contains $\geq$ 15% sand, add "with sand" to group name.
g. If fines classify as CL-ML, use dual symbol GC-GM, SC-SM.
h. If fines are organic, add "with organic fines" to group name.
i. If soil contains $\geq$ 15% gravel, add "with gravel" to group name.
j. If the liquid limit and plasticity index plot in hatched area on plasticity chart, soil is a CL-ML, silty clay.
k. If soil contains 15 to 29% plus No. 200, add "with sand" or "with gravel" whichever is predominant.
l. If soil contains $\geq$ 30% plus No. 200, predominantly sand, add "sandy" to group name.
m. If soil contains $\geq$ 30% plus No. 200, predominantly gravel, add "gravelly" to group name.
n. PI $\geq$ 4 and plots on or above "A" line.
o. PI $<$ 4 or plots below "A" line.
p. PI plots on or above "A" line.
q. PI plots below "A" line.

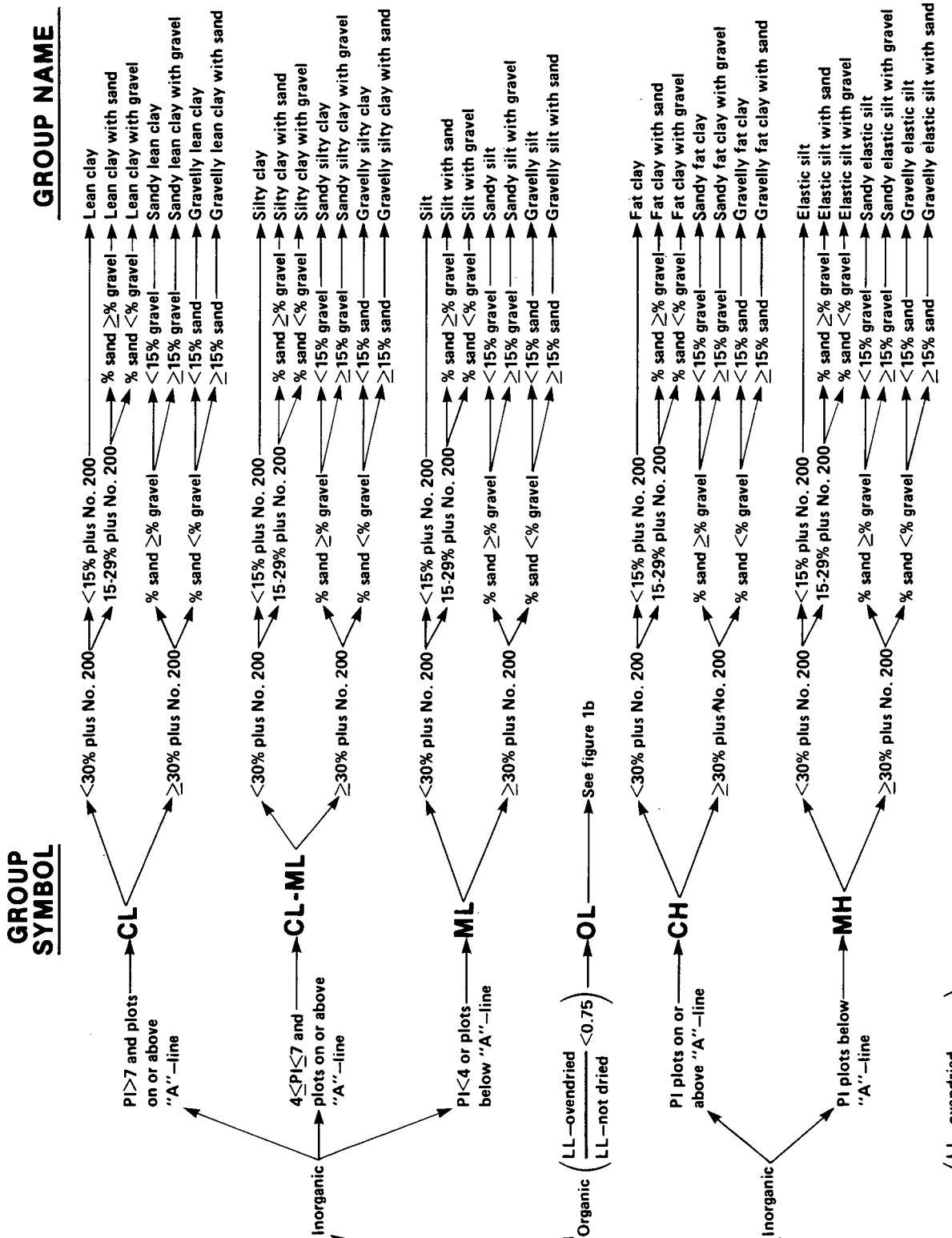

Figure 1a. – Flow chart for classifying inorganic fine-grained soils – laboratory method (50% or more passes No. 200 sieve).

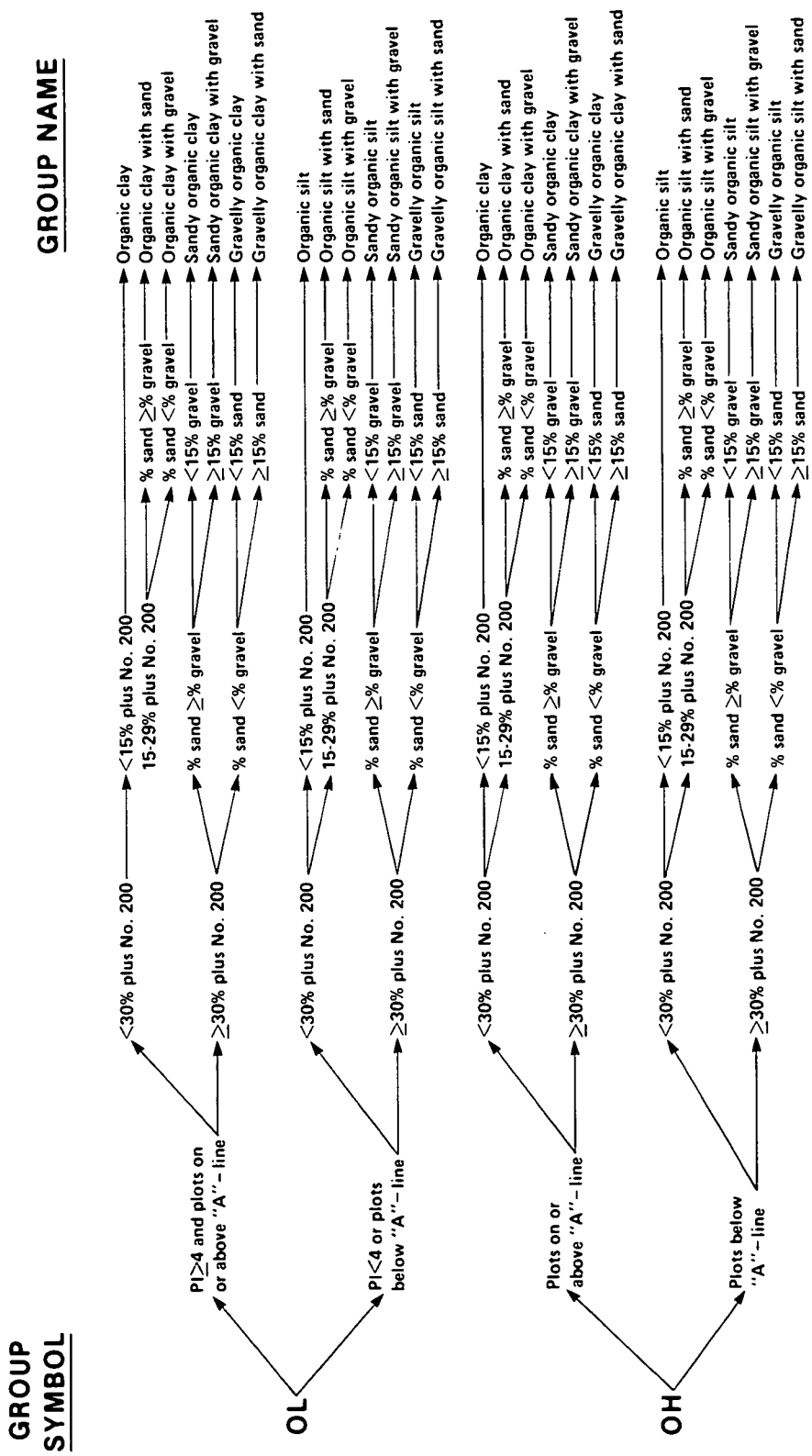

Figure 1b. – Flow chart for classifying organic fine-grained soils – laboratory method (50% or more passes No. 200 sieve).

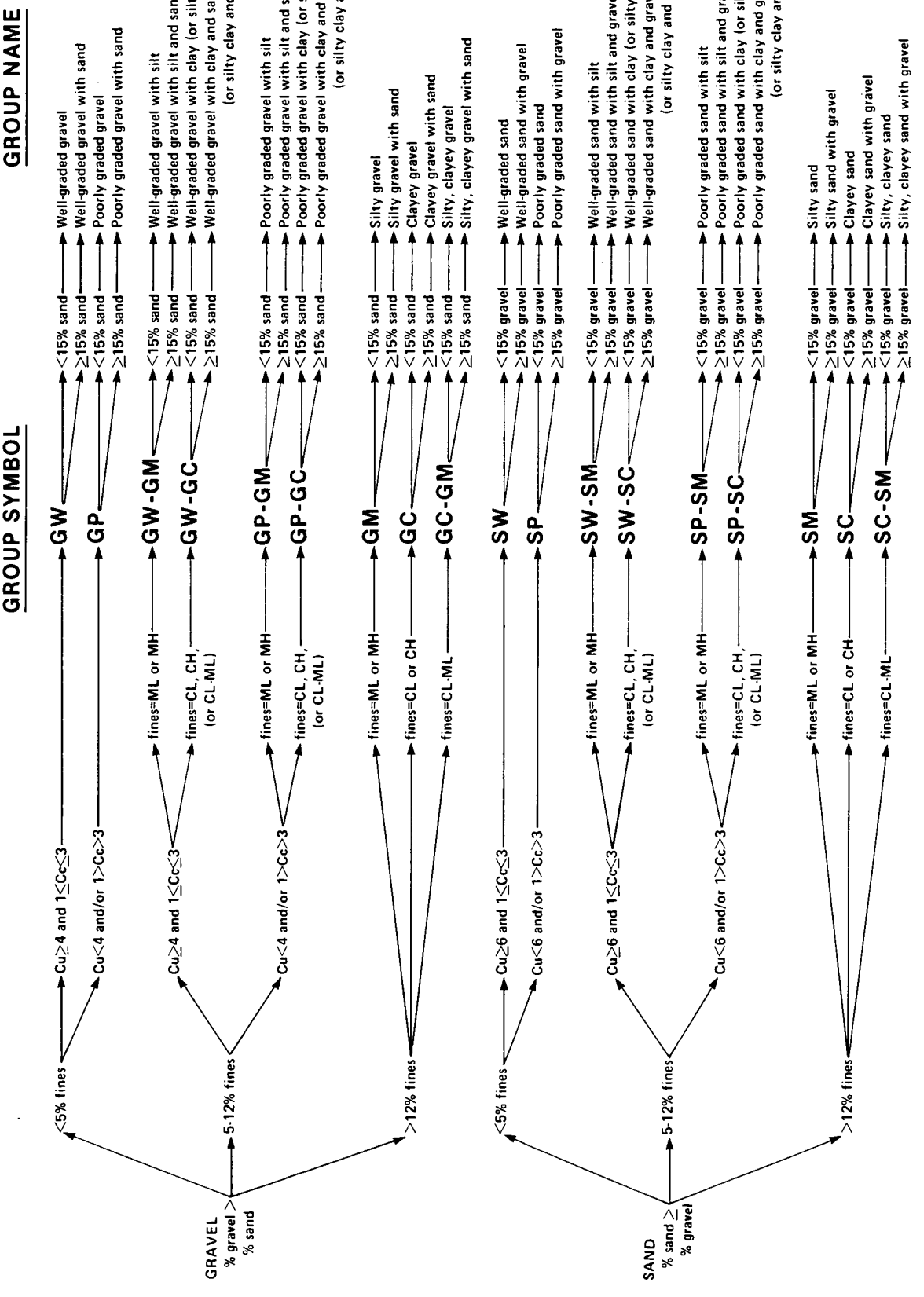

Figure 2. – Flow chart for classifying coarse-grained soils – laboratory method (more than 50% retained on No. 200 sieve).

for obtaining and preparing the samples and conducting the prescribed laboratory tests, a plasticity chart (similar to fig. 3) and a cumulative particle-size distribution curve (similar to fig. 4) are required.

NOTE 3.–The "U"-line shown on figure 3 has been empirically determined to be the approximate "upper limit" for natural soils. It is a good check against erroneous data, and any test results that plot above or to the left of it should be verified.

7. Sampling, Test Specimens, and Test Units

7.1 Samples shall be obtained and identified in accordance with a USBR procedure or ASTM standard or other appropriate standard or procedure.

7.2 For accurate identification, the minimum amount of test sample required for this procedure will depend on which of the laboratory tests need to be performed. Where only the particle-size analysis of the sample is required, specimens having the following minimum dry masses are required:

Maximum particle size, sieve opening		*Minimum specimen size, dry mass*	
mm	in	kg	lbm
4.75	No. 4	0.1	0.2
9.5	3/8	0.25	0.5
19.0	3/4	1.1	2.5
37.5	1-1/2	10	20
75.0	3	70	150

Whenever possible, the field sample should have a mass two to four times larger than shown.

7.3 When the liquid and plastic limit tests also must be performed, additional material will be required sufficient to provide 150 to 200 grams of soil finer than the No. 40 (425-μm) sieve.

7.4 If the field sample or test specimen is smaller than the minimum recommended amount, the report shall include an appropriate remark.

8. Classification of Peat

8.1 A sample composed primarily of vegetable tissue in various stages of decomposition and has a fibrous to amorphous texture, a dark brown to black color, and an organic odor should be designated as a highly organic soil and shall be classified as peat, PT, and not subjected to the classification procedures described hereafter.

9. Specimen Preparation for Classification

9.1 Before a soil can be classified according to this procedure, generally the particle-size distribution curve of the minus 3-inch (75-mm) material and the plasticity characteristics of the minus No. 40 (425 μm) material must be determined. (See subpar. 9.8 for the specific required tests.)

9.2 The preparation of the soil specimen(s) and the testing for particle-size distribution and liquid limit and plasticity index shall be in accordance with accepted procedures. Two procedures for preparation of the soil specimens for testing for soil classification purposes are given in appendixes X3 and X4. Appendix X3 describes the wet preparation method and is the preferred method for organic soils and for special cases. Normally, the procedure described in appendix X4 will be used.

9.3 When reporting soil classifications determined by this procedure, the preparation and procedures used shall be reported or referenced.

9.4 Although the procedure used in determining the particle-size distribution or other considerations may require a hydrometer analysis of the material, a hydrometer analysis is not necessary for soil classification.

9.5 The percentage (by dry mass) of any plus 3-inch (75-mm) material must be determined and reported as auxiliary information.

9.6 The maximum particle size shall be determined (measured or estimated) and reported as auxiliary information.

9.7 When the cumulative particle-size distribution curve is required, a set of sieves shall be used which includes the following sizes (with the largest size commensurate with the maximum particle size) with other sieve sizes as needed or required to define the particle-size distribution:

U.S.A. Standard series sieve			
mm	in	μm	No.
75	3	600	30
37.5	1-1/2	300	50
19.0	3/4	150	100
9.5	3/8	75	200
4.75	No. 4		
2.36	No. 8		
1.18	No. 16		

9.8 The tests required to be performed in preparation for classification follow:

9.8.1 For soils estimated to contain less than 5 percent fines, a plot of the cumulative particle-size distribution curve of the fraction coarser than the No. 200 (75 μm) sieve is required. The cumulative particle-size distribution curve may be plotted on a graph similar to that shown on figure 4.

9.8.2 For soils estimated to contain 5 to 15 percent fines, a cumulative particle-size distribution curve, as described in subparagraph 9.8.1, is required; and the liquid limit and plasticity index are required.

9.8.2.1 If sufficient material is not available to determine the liquid limit and plasticity index, the fines should be estimated to be either silty or clayey using the procedures described in USBR 5005 and so noted in the report.

9.8.3 For soils estimated to contain 15 percent or more fines, a determination of the percent fines, percent sand, and percent gravel is required, and the liquid limit and plasticity index are required. For soils estimated to contain 90 percent fines or more, the percent fines, percent sand, and percent gravel may be estimated using the procedures described in USBR 5005 and so noted in the report.

10. Preliminary Classification Procedure

10.1 Designate the soil as fine-grained if 50 percent or more by dry mass of the test specimen passes the No. 200 (75-μm) sieve and follow paragraph 11.

10.2 Designate the soil as coarse-grained if more than 50 percent by dry mass of the test specimen is retained on the No. 200 (75-μm) sieve and follow paragraph 12.

11. Procedure for the Classification of Fine-Grained Soils [50 percent or more by dry mass passing the No. 200 (75-μm) sieve]

11.1 The soil is an inorganic clay if the position of the plasticity index versus liquid limit plot (fig. 3) falls on or above the "A"-line and the plasticity index is greater than 4 and presence of organic matter does not influence the liquid limit as determined in subparagraph 11.3.2.

11.1.1 Classify the soil as a *lean clay, CL*, if the liquid limit is less than 50. See area identified as CL on the plasticity chart (fig. 3).

11.1.2 Classify the soil as a *fat clay, CH*, if the liquid limit is 50 or greater. See area identified as CH on the plasticity chart (fig 3).

NOTE 4.–In cases where the liquid limit exceeds 110 or the plasticity index exceeds 60, the plasticity chart may be expanded by maintaining the same scale on both axes and extending the "A"-line at the indicated slope.

11.1.3 Classify the soil as a *silty clay, CL-ML*, if the position of the plasticity index versus liquid limit plot falls on or above the "A"-line and the plasticity index is in the range of 4 to 7. See area identified as CL-ML on the plasticity chart (fig. 3).

11.2 The soil is an inorganic silt if the position of the plasticity index versus liquid limit plot (fig. 3), falls below the "A"-line or the plasticity index is less than 4, and presence of organic matter does not influence the liquid limit as determined in subparagraph 11.3.2.

11.2.1 Classify the soil as a *silt, ML*, if the liquid limit is less than 50. See area identified as ML on the plasticity chart (fig. 3).

11.2.2 Classify the soil as an *elastic silt, MH*, if the liquid limit is 50 or greater. See area identified as MH on the plasticity chart (fig. 3).

11.3 The soil is an organic silt or clay if organic matter is present in sufficient amounts to influence the soil properties as determined in subparagraph 11.3.2.

11.3.1 If the soil has a dark color and an organic odor when moist and warm, a second liquid limit test shall be performed on a test specimen which has been ovendried at 110±5 °C to a constant mass, typically overnight.

11.3.2 The soil is an organic silt or organic clay if the liquid limit after ovendrying is less than 75 percent of the liquid limit of the original specimen determined before ovendrying (see Procedure B of ASTM D 2217).

11.3.3 Classify the soil as an *organic silt* or *organic clay, OL*, if the liquid limit (not ovendried) is less than 50. Classify the soil as an *organic silt, OL*, if the plasticity index is less than 4, or the position of the plasticity index versus liquid limit plot falls below the "A"-line. Classify the soil as an *organic clay, OL*, if the plasticity index is 4 or greater and the position of the plasticity index versus

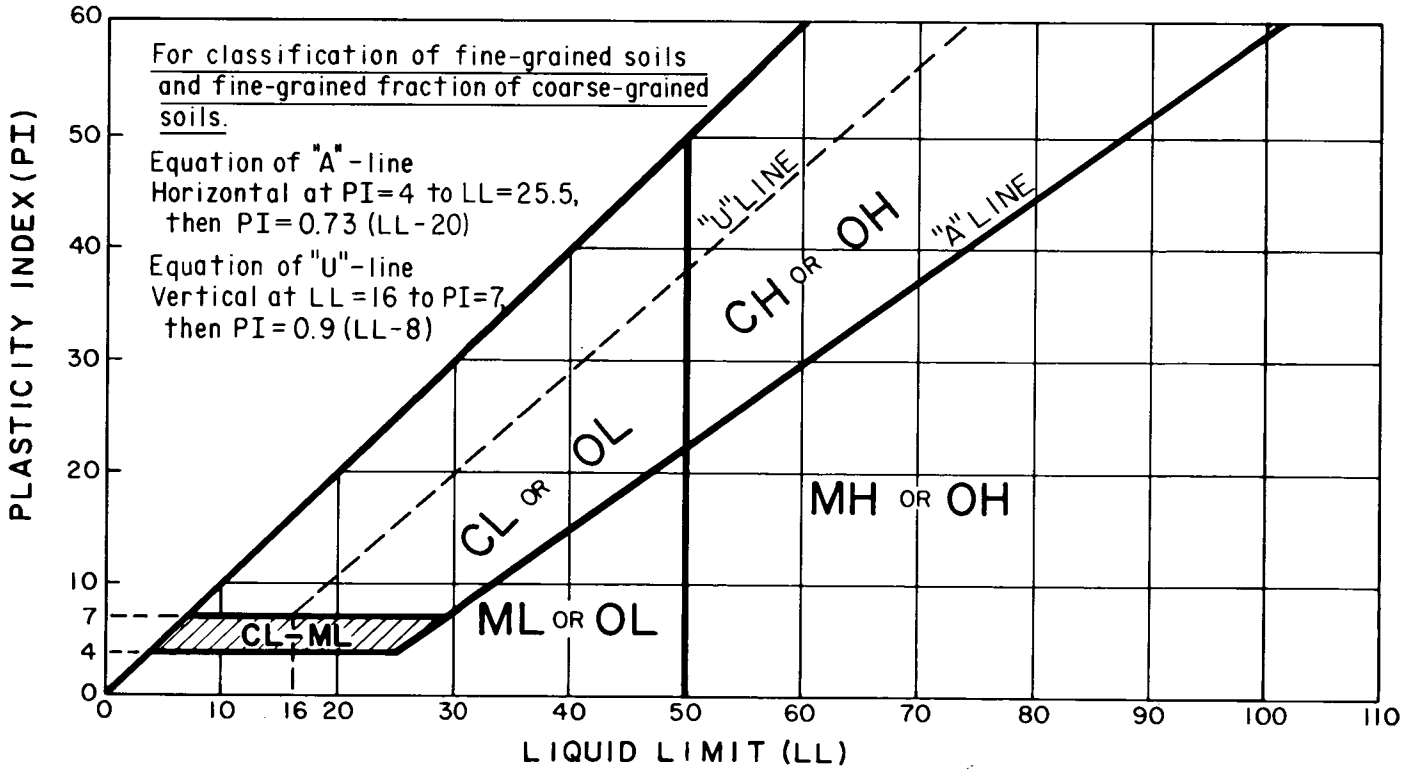

Fig. 3. – Plasticity chart.

liquid limit plot falls on or above the "A"-line. See area identified as OL (or CL-ML) on the plasticity chart (fig. 3).

11.3.4 Classify the soil as an *organic clay* or *organic silt, OH*, if the liquid limit (not ovendried) is 50 or greater. Classify the soil as an *organic silt, OH*, if the position of the plasticity index versus liquid limit plot falls below the "A"-line. Classify the soil as an *organic clay, OH*, if the position of the plasticity index versus liquid limit plot falls on or above the "A"-line. See area identified as OH on the plasticity chart (fig. 3).

11.4 If less than 30 percent but 15 percent or more of the test specimen is retained on the No. 200 (75-μm) sieve, the words "with sand" or "with gravel" (whichever is more predominant) shall be added to the group name (e.g., lean clay with sand, CL; silt with gravel, ML). If the percent of sand is equal to the percent of gravel, use "with sand."

11.5 If 30 percent or more of the test specimen is retained on the No. 200 (75-μm) sieve, the words "sandy" or "gravelly" shall be added to the group name. Add the word "sandy" if 30 percent or more of the test specimen is retained on the No. 200 (75-μm) sieve and the coarse-grained portion is predominantly sand. Add the word "gravelly" if 30 percent or more of the test specimen is retained on the No. 200 (75-μm) sieve and the coarse-grained portion is predominantly gravel (e.g., sandy lean clay, CL; gravelly fat clay, CH; sandy silt, ML). If the percent of sand is equal to the percent of gravel, use "sandy."

12. Procedure for the Classification of Coarse-Grained Soils [more than 50 percent by dry mass retained on the No. 200 (75-μm) sieve]

12.1 Designate the soil as gravel if more than 50 percent of the coarse fraction [plus No. 200 (75-μm) sieve] is retained on the No. 4 (4.75-mm) sieve.

12.2 Designate the soil as sand if 50 percent or more of the coarse fraction [plus No. 200 (75-μm) sieve] passes the No. 4 (4.75-mm) sieve.

12.3 If 12 percent or less of the test specimen passes the No. 200 (75-μm) sieve, plot the cumulative particle-size distribution curve (fig. 4); and compute the coefficient of uniformity, *Cu*, and coefficient of curvature, *Cc*, as given in equations 1 and 2.

$$Cu = \frac{D_{60}}{D_{10}} \quad (1)$$

$$Cc = \frac{(D_{30})^2}{D_{10}\,D_{60}} \quad (2)$$

where D_{10}, D_{30}, and D_{60} are the particle-size diameters corresponding to 10, 30, and 60 percent passing on the cumulative particle-size distribution curve (fig. 4).

NOTE 5.–It may be necessary to extrapolate the curve to obtain the D_{10} diameter.

12.3.1 If less than 5 percent of the test specimen passes the No. 200 (75-μm) sieve, classify the soil as a *well-graded gravel, GW*, or *well-graded sand, SW*, if *Cu* is greater than 4.0 for gravel or greater than 6.0 for sand and *Cc* is at least 1.0 but not more than 3.0.

12.3.2 If less than 5 percent of the test specimen passes the No. 200 (75-μm) sieve, classify the soil as *poorly graded gravel, GP*, or *poorly graded sand, SP*, if either the *Cu* or the *Cc* criteria for well-graded soils are not satisfied.

12.4 If more than 12 percent of the test specimen passes the No. 200 (75-μm) sieve, the soil shall be considered a coarse-grained soil with fines. The fines are determined to be either clayey or silty based on the plasticity index versus liquid limit plot on the plasticity chart (fig. 3). (If sufficient material for testing is not available, see subpar. 9.8.2.1.)

12.4.1 Classify the soil as a *clayey gravel, GC*, or *clayey sand, SC*, if the fines are clayey; that is, the position of the plasticity index versus liquid limit plot (fig. 3), falls on or above the "A"-line and the plasticity index is greater than 7.

12.4.2 Classify the soil as a *silty gravel, GM*, or *silty sand, SM*, if the fines are silty; that is, the position of the plasticity index versus liquid limit plot (fig. 3), falls below the "A"-line or the plasticity index is less than 4.

12.4.3 If the fines plot as a silty clay, CL-ML, classify the soil as a *silty, clayey gravel, GC-GM*, if it is a gravel or a *silty, clayey sand, SC-SM*, if it is a sand.

12.5 If 5 to 12 percent of the test specimen passes the No. 200 (75-μm) sieve, assign the soil a dual classification using two group symbols separated by a hyphen.

12.5.1 The first group symbol shall correspond to that for a gravel or sand having less than 5 percent fines (GW, GP, SW, SP), and the second symbol shall correspond to a gravel or sand having more than 12 percent fines (GC, GM, SC, SM).

12.5.2 The group name shall correspond to the first group symbol plus "with clay" or "with silt" to indicate the plasticity characteristics of the fines (e.g., well-graded gravel with clay, GW-GC; poorly graded sand with silt, SP-SM). (If sufficient material for testing is not available, see subpar. 9.8.2.1.)

NOTE 6.–If the fines plot as a silty clay, CL-ML, the second group symbol should be either GC or SC (e.g., a poorly graded sand with 10 percent fines, a liquid limit of 20, and a plasticity index of 6, would be classified as a poorly graded sand with silty clay, SP-SC).

12.6 If the specimen is predominantly sand or gravel but contains 15 percent or more of the other coarse-grained constituent, the words "with gravel" or "with sand" shall be added to the group name (e.g., poorly graded gravel with sand, GP; clayey sand with gravel, SC).

12.7 If the field sample contained any cobbles and/or boulders, the words "with cobbles," or "with cobbles and boulders" shall be added to the group name (e.g., silty gravel with cobbles, GM).

13. Report

13.1 The report should include the group name, group symbol, and the results of the laboratory tests. The particle-size distribution shall be given in terms of percent of gravel, sand, and fines. The plot of the cumulative particle-size

distribution curve shall be reported if used in classifying the soil. Report appropriate descriptive information according to USBR 5005. A local or commercial name or geologic interpretation for the material may be added at the end of the descriptive information if identified as such. The procedures used shall be referenced.

NOTE 7.–Example: CLAYEY GRAVEL WITH SAND AND COBBLES (GC): Sample from interval had 46 percent fine to coarse, hard, subrounded gravel; 30 percent fine to coarse, hard, subrounded sand; 24 percent clayey fines; weak reaction with HCl; original field sample had 2 percent hard, subrounded cobbles; maximum dimension, 150 mm. LL = 38, PI = 19.

In-place conditions — firm, homogeneous, dry, brown
Geologic interpretation — alluvial fan

NOTE 8.–Other examples of soil descriptions are given in appendix X1.

14. Precision and Accuracy

14.1 This method provides qualitative data only; therefore, a precision and accuracy statement is nonapplicable.

15. Reference

[1] Casagrande, A., "Classification and Identification of Soils," *Trans. of the Am. Soc. of Civil Engineers*, p. 901, 1948.

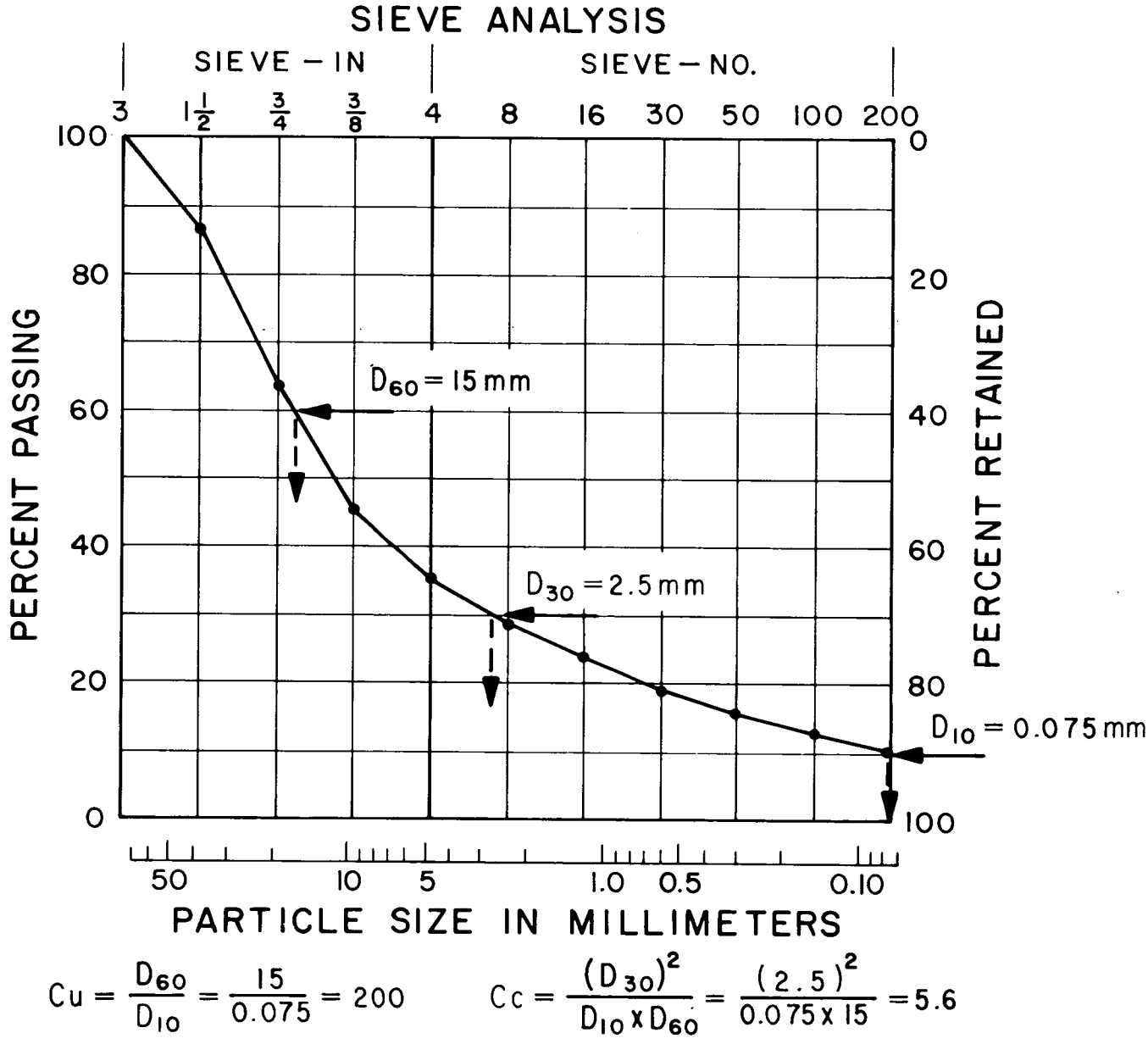

Figure 4. – Gradation plot.

APPENDIXES

X1. EXAMPLES OF DESCRIPTIONS USING SOIL CLASSIFICATION

X1.1 The following examples show how the information required in subparagraph 13.1 can be reported. The appropriate descriptive information from USBR 5005 is included for illustrative purposes. The additional descriptive terms that would accompany the soil classification should be based on the intended use of the classification and the individual circumstances.

Example 1: WELL-GRADED GRAVEL WITH SAND (GW): Sample had 73 percent fine to coarse, hard, subangular gravel; 23 percent fine to coarse, hard, subangular sand; 4 percent fines; maximum size, 75 mm; moist, brown; no reaction with HCl. $Cc = 2.7$, $Cu = 12.4$.

Example 2: SILTY SAND WITH GRAVEL (SM): Sample from interval had 61 percent predominantly fine sand; 23 percent silty fines; 16 percent fine, hard, subrounded gravel; maximum size, 20 mm; no reaction with HCl. Note: field sample smaller than recommended. LL = 33, PI = 6.

In-place conditions — firm, stratified, and contains lenses of silt 1 to 2 inches thick; moist, brown to gray; in-place dry unit weight = 106 lbf/ft^3 and in-place moisture = 9 percent.

Example 3: ORGANIC CLAY (OL): Sample had 100 percent fines, LL (not dried) = 32, LL (ovendried) = 21, PI (not dried) = 10; wet, dark brown, organic odor; weak reaction with HCl.

Example 4: SILTY SAND WITH ORGANIC FINES (SM): Sample had 74 percent fine to coarse, hard, subangular reddish sand; 26 percent organic and silty dark brown fines, LL (not dried) = 37, LL (ovendried) = 26, PI (not dried) = 6; maximum size, coarse sand; wet; weak reaction with HCl.

Example 5: POORLY GRADED GRAVEL WITH SILT, SAND, COBBLES, AND BOULDERS (GP-GM): Sample from interval had 78 percent fine to coarse, hard, subrounded to subangular gravel; 16 percent fine to coarse, hard, subrounded to subangular sand; 6 percent silty (estimated) fines; moist, brown; no reaction with HCl; original field sample had a trace of hard, subrounded cobbles and a trace of hard, subrounded boulders with a maximum dimension of 500 mm. $Cc = 0.8$, $Cu = 40$.

X2. USING SOIL CLASSIFICATION AS A DESCRIPTIVE SYSTEM FOR SHALE, CLAYSTONE, SHELLS, SLAG, CRUSHED ROCK, ETC.

X2.1 The group names and symbols used in this method may be used as a descriptive system applied to materials that exist in situ as shale, claystone, sandstone, siltstone, mudstone, etc., but convert to soils after field or laboratory processing (crushing, slaking, etc.).

X2.2 Materials such as shells, crushed rock, slag, etc., should be identified as such. However, the procedures used in this method for describing particle-size and plasticity characteristics may be used in the description of the material. If desired, a classification according to this method may be assigned to aid in describing the material.

X2.3 If a classification is used, the group symbol(s) and group names should be placed in quotation marks or noted with some type of distinguishing symbol (see following examples).

X2.4 Examples of how soil classifications could be incorporated into a description system for materials that are not naturally occurring soils are as follow:

Example 1: SHALE CHUNKS: Retrieved as 2- to 4-inch pieces of shale from power auger hole; dry, brown; no reaction with HCl. After a sample was laboratory processed by slaking in water for 24 hours, the sample was classified as "SANDY LEAN CLAY (CL)" — 61 percent clayey fines, LL = 37, PI = 16; 33 percent fine to medium sand; 6 percent gravel-size pieces of shale.

Example 2: CRUSHED SANDSTONE: Product of commercial crushing operation; "POORLY GRADED SAND WITH SILT (SP-SM)" — sample had 91 percent fine to medium sand; 9 percent silty (estimated) fines; dry, reddish-brown; strong reaction with HCl.

Example 3: BROKEN SHELLS: Sample from interval had 62 percent gravel-size broken shells; 31 percent sand and sand-size shell pieces; 7 percent fines. Would be classified as "POORLY GRADED GRAVEL WITH SAND (GP)."

Example 4: CRUSHED ROCK: Processed gravel and cobbles from Pit No. 7; "POORLY GRADED GRAVEL (GP)" — sample had 89 percent fine, hard, angular gravel-size particles; 11 percent coarse, hard, angular sand-size particles; dry, tan; no reaction with HCl. $Cc = 2.4$, $Cu = 0.9$.

X3. PREPARATION AND TESTING FOR CLASSIFICATION PURPOSES BY THE WET METHOD

X3.1 This appendix describes the steps in preparing a soil sample for testing for purposes of soil classification using a wet preparation procedure.

X3.2 Samples prepared in accordance with this procedure should contain as much of their natural moisture content as possible, and every effort should be made during obtaining, preparing, and transporting the samples to maintain the natural moisture.

X3.3 The procedures to be followed in this method assume that the field sample contains fines, sand, gravel, and plus 3-inch (75-mm) particles, and the cumulative particle-size distribution plus the liquid limit and plasticity index values are required (see subpar. 9.8). Some of the following steps may be omitted when they are not applicable to the soil being tested.

X3.4 If the soil contains plus No. 200 (75-μm) particles that would degrade during dry sieving, use a procedure for determining the particle-size characteristics that prevents this degradation.

X3.5 Since this classification system is limited to the portion of a sample passing the 3-inch (75-mm) sieve, the plus 3-inch (75-mm) material shall be removed prior to the determination of the particle-size characteristics and the liquid limit and plasticity index.

X3.6 The portion of the field sample finer than the 3-inch (75-mm) sieve shall be obtained as follows:

X3.6.1 Separate the field sample into two fractions on a 3-inch (75-mm) sieve, being careful to maintain the natural moisture content in the minus 3-inch (75-mm) fraction. Any particles adhering to the plus 3-inch (75-mm) particles shall be brushed or wiped off and placed in the fraction passing the 3-inch (75-mm) sieve.

X3.6.2 Determine the air-dry or ovendry mass of the fraction retained on the 3-inch (75-mm) sieve. Determine the total (wet) mass of the fraction passing the 3-inch (75-mm) sieve.

X3.6.3 Thoroughly mix the fraction passing the 3-inch (75-mm) sieve. Determine the moisture content, in accordance with USBR 5300, of a representative specimen with a minimum dry mass as required in subparagraph 7.2. Save the moisture content specimen for determination of the particle-size analysis in accordance with subparagraph X3.8.

X3.6.4 Compute the dry mass of the fraction passing the 3-inch (75-mm) sieve based on the moisture content and total (wet) mass. Compute the total dry mass of the sample and calculate the percentage of material retained on the 3-inch (75-mm) sieve.

X3.7 Determine the liquid limit and plasticity index as follows:

X3.7.1 If the soil disaggregates readily, mix on a clean, hard surface and select a representative sample by quartering in accordance with USBR 5205.

X3.7.1.1 If the soil contains coarse-grained particles coated with and bound together by tough clayey material, extreme care has to be taken in obtaining a representative portion of the minus No. 40 (425-μm) fraction. Typically, a larger portion than normal has to be selected, such as the minimum masses required in subparagraph 7.2.

X3.7.1.2 To obtain a representative specimen of a basically cohesive soil, it may be advantageous to pass the soil through a 3/4-inch (19.0-mm) sieve or other convenient size so the material can be more easily mixed and then quartered or split to obtain the representative specimen.

X3.7.2 Process the representative specimen in accordance with Procedure B of ASTM D 2217.

X3.7.3 Perform the liquid limit test in accordance with USBR 5350 or 5355, except the soil shall not be air-dried prior to the test.

X3.7.4 Perform the plastic limit test in accordance with USBR 5360, except the soil shall not be air-dried prior to the test, and calculate the plasticity index.

X3.8 Determine the particle-size distribution as follows:

X3.8.1 If the moisture content of the fraction passing the 3-inch (75-mm) sieve was required (subpar. X3.6.3), use the moisture content specimen for determining the particle-size distribution. Otherwise, select a representative specimen in accordance with USBR 5205 with a minimum dry mass as required in subparagraph 7.2.

X3.8.2 If the cumulative particle-size distribution including a hydrometer analysis is required, determine the particle-size distribution in accordance with USBR 5330 (see subpar. 9.7 for the set of required sieves).

X3.8.3 If the cumulative particle-size distribution without a hydrometer analysis is required, determine the particle-size distribution in accordance with USBR 5335 (see subpar. 9.7 for the set of required sieves). The specimen should be soaked until all clayey aggregations have softened and then washed in accordance with ASTM C 117 prior to performing the particle-size distribution.

X3.8.4 If the cumulative particle-size distribution is not required, determine the percent fines, percent sand, and percent gravel in the specimen in accordance with ASTM C 117, being sure to soak the specimen long enough to soften all clayey aggregations, followed by USBR 5335 using a set of sieves which shall include a No. 4 (4.75-mm) and a No. 200 (75-μm) sieve.

X3.8.5 Calculate the percent fines, percent sand, and percent gravel in the minus 3-inch (75-mm) fraction for classification purposes.

X4. PREPARATION AND TESTING FOR CLASSIFICATION PURPOSES BY THE AIR-DRIED METHOD

X4.1 This appendix describes the steps in preparing a soil sample for testing for purposes of soil classification when air-drying the soil before testing is specified or desired or when the natural moisture content is near that of an air-dried state.

X4.2 If the soil contains organic matter colloids that are irreversibly affected by air-drying, the wet preparation method as described in appendix X3 should be used.

X4.3 Since this classification system is limited to the portion of a sample passing the 3-inch (75-mm) sieve, the plus 3-inch (75-mm) material shall be removed prior to the determination of the particle-size characteristics and the liquid limit and plasticity index.

X4.4 The portion of the field sample finer than the 3-inch (75-mm) sieve shall be obtained as follows:

X4.4.1 Air-dry and determine the mass of the field sample.

X4.4.2 Separate the field sample into two fractions on a 3-inch (75-mm) sieve.

X4.4.3 Determine the mass of the two fractions and compute the percentage of the plus 3-inch (75-mm) material in the field sample.

X4.5 Determine the particle-size distribution and liquid limit and plasticity index as follows (See subpar. 9.8 for when these tests are required.):

X4.5.1 Thoroughly mix the fraction passing the 3-inch (75-mm) sieve.

X4.5.2 If the cumulative particle-size distribution including a hydrometer analysis is required, determine the particle-size distribution in accordance with USBR 5330. (See subpar. 9.7 for the set of sieves that is required.)

X4.5.3 If the cumulative particle-size distribution without a hydrometer analysis is required, determine the particle-size distribution in accordance with USBR 5335. (See subpar. 9.7 for the set of sieves that is required.)

X4.5.4 If the cumulative particle-size distribution is not required, determine the percent fines, percent sand, and percent gravel in the specimen in accordance with ASTM Method D 1140 followed by ASTM Method C 136 using a set of sieves which shall include a No. 4 (4.75-mm) and a No. 200 (75-μm) sieve.

X4.5.5 If required, determine the liquid limit and the plasticity index of the test specimen in accordance with USBR 5350 (or USBR 5355) and USBR 5360.

X5. ABBREVIATED SOIL CLASSIFICATION SYMBOLS

X5.1 In some cases, because of lack of space, an abbreviated system may be used to indicate the soil classification symbol and name.

X5.2 The abbreviated system should consist of the soil classification symbol based on this designation with appropriate lower case letter prefixes and suffixes as:

Prefix:	s = sandy	Suffix: s = with sand
	g = gravelly	g = with gravel
		c = with cobbles
		b = with boulders

X5.3 The soil classification symbol is to be enclosed in parenthesis. Some examples would be:

CL, Sandy lean clay	s(CL)
SP-SM, Poorly graded sand with silt and gravel	(SP-SM)g
GP, poorly graded gravel with sand, cobbles, and boulders	(GP) scb
ML, gravelly silt with sand and cobbles	g(ML)sc

UNITED STATES DEPARTMENT OF THE INTERIOR
BUREAU OF RECLAMATION

USBR 5005-86

PROCEDURE FOR

DETERMINING UNIFIED SOIL CLASSIFICATION (VISUAL METHOD)

INTRODUCTION

This procedure is under the jurisdiction of the Geotechnical Services Branch, code D-3760, Research and Laboratory Services Division, Denver Office, Denver, Colorado. The procedure is issued under the fixed designation USBR 5005. The number immediately following the designation indicates the year of acceptance or the year of last revision.

This procedure is similar to ASTM D 2488, Standard Practice for Description and Identification of Soils (Visual-Manual Procedure) except for the following: (1) change in title and format, (2) references to USBR procedures, (3) note 2 in ASTM D 2488 is required in this procedure, (4) note 4 in ASTM D 2488 is required in this procedure, (5) the maximum particle size is in millimeters with prescribed increments of measurement, (6) the specimens for the dry strength test are one-fourth inch (6 mm) in diameter rather than one-half inch (12 mm), (7) note 14 is not used, and (8) moisture content is used here instead of water content and mass is substituted for weight.

For circumstances where it may be required or expedient to use ASTM standards, ASTM D 2487 or D 2488 may be substituted for USBR 5000 or 5005, respectively. However, it must be clearly stated in written comments, tables, figures, and logs that the ASTM standards were used.

1. Scope

1.1 This designation outlines the procedures for the description of soils for engineering purposes.

1.2 This designation outlines procedures for visually identifying soils for engineering purposes based on the classification system described in USBR 5000. The identification is based on visual examination and manual tests. It must be clearly stated in reporting an identification that it is based on the visual-manual processes.

1.2.1 When precise classification of soils for engineering purposes is required, the procedures required in USBR 5000 shall be used.

1.2.2 The identification portion of this procedure — in assigning a group symbol and name — is limited to soil particles smaller than 3 inches (75 mm); that is, passing a U.S.A. Standard series 3-inch sieve.

1.2.3 The identification portion of this procedure is limited to naturally occurring soils.

NOTE 1.–This procedure may be used as a descriptive system applied to such materials as shale, claystone, shells, crushed rock, etc. (see app. X2).

1.3 The descriptive information in this procedure may be used with other soil classification systems or for materials other than naturally occurring soils.

2. Applicable Documents

2.1 *USBR Procedures*:
USBR 3900 Standard Definitions of Terms and Symbols Relating to Soil Mechanics
USBR 5000 Determining Unified Soil Classification (Laboratory Method)

2.2 *ASTM Standards*:
D 2487 Classification of Soils for Engineering Purposes
D 2488 Standard Practice for Description and Identification of Soils (Visual-Manual Procedure)

3. Summary of Method

3.1 Using visual examination and simple manual tests, this procedure gives standardized criteria and processes for describing and identifying soils.

3.2 Soil can be given an identification by assigning a group symbol(s) and name. The flow charts (figure 1 for fine-grained soils and figure 2 for coarse-grained soils) can be used to determine the appropriate group symbol(s) and name. If the soil has visually determined properties that do not distinctly place it into a specific group, borderline symbols may be used (see app. X3).

3.3 A distinction must be made between *dual symbols* and *borderline symbols*.

3.3.1 A *dual symbol* (two symbols separated by a hyphen, e.g., GP-GM, SW-SC, CL-ML) should be used to indicate the soil has been identified as having the properties of a classification as required by USBR 5000 where two symbols are required. Two symbols are required when the soil has between 5 and 12 percent fines and where the liquid limit and plasticity index values plot in the CL-ML (cross hatched) area of the plasticity chart.

3.3.2 A *borderline symbol* (two symbols separated by a slash, e.g., CL/CH, GM/SM, CL/ML) should be used to indicate the soil has been identified as having properties

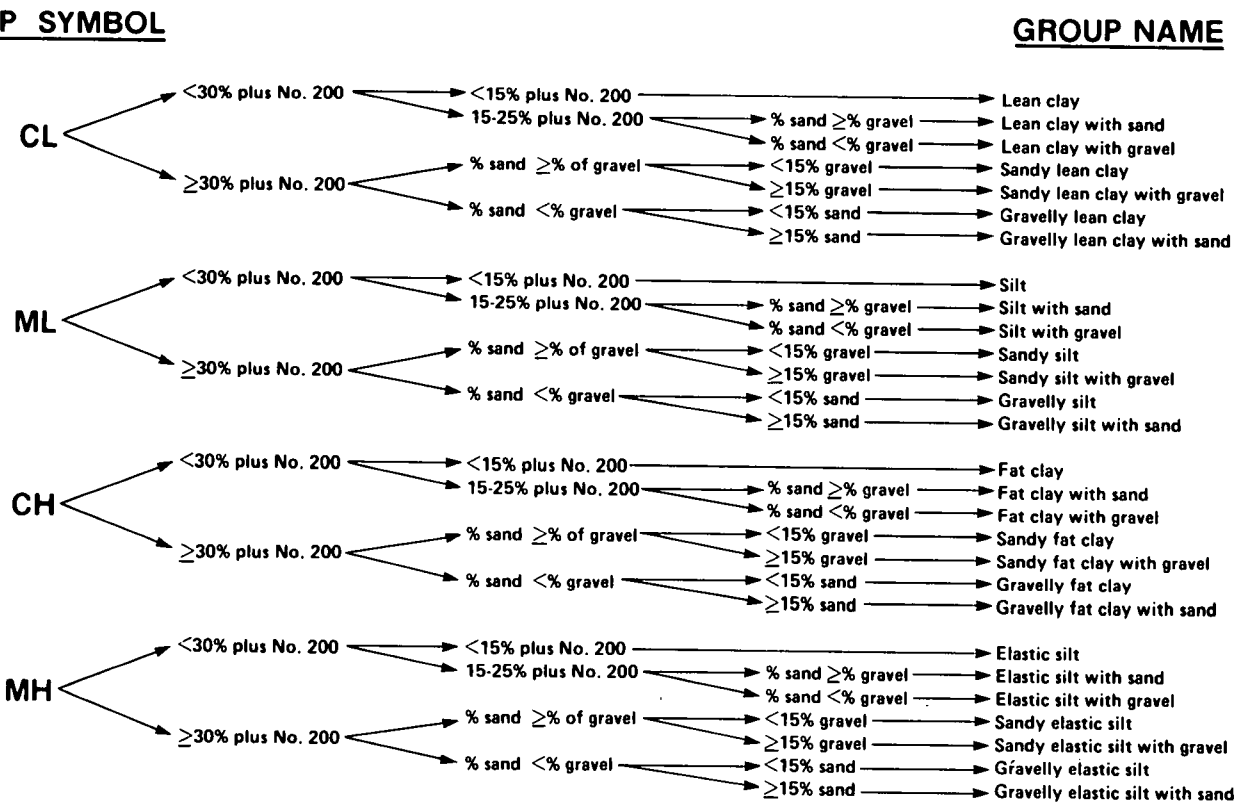

Figure 1a. – Flowchart for identifying inorganic fine-grained soil (50% or more fines) — visual-manual method.

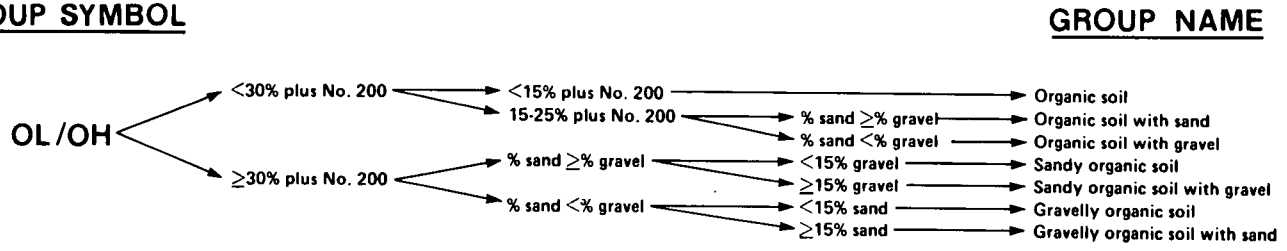

Figure 1b. – Flowchart for identifying organic fine-grained soil (50% or more fines) — visual-manual method.

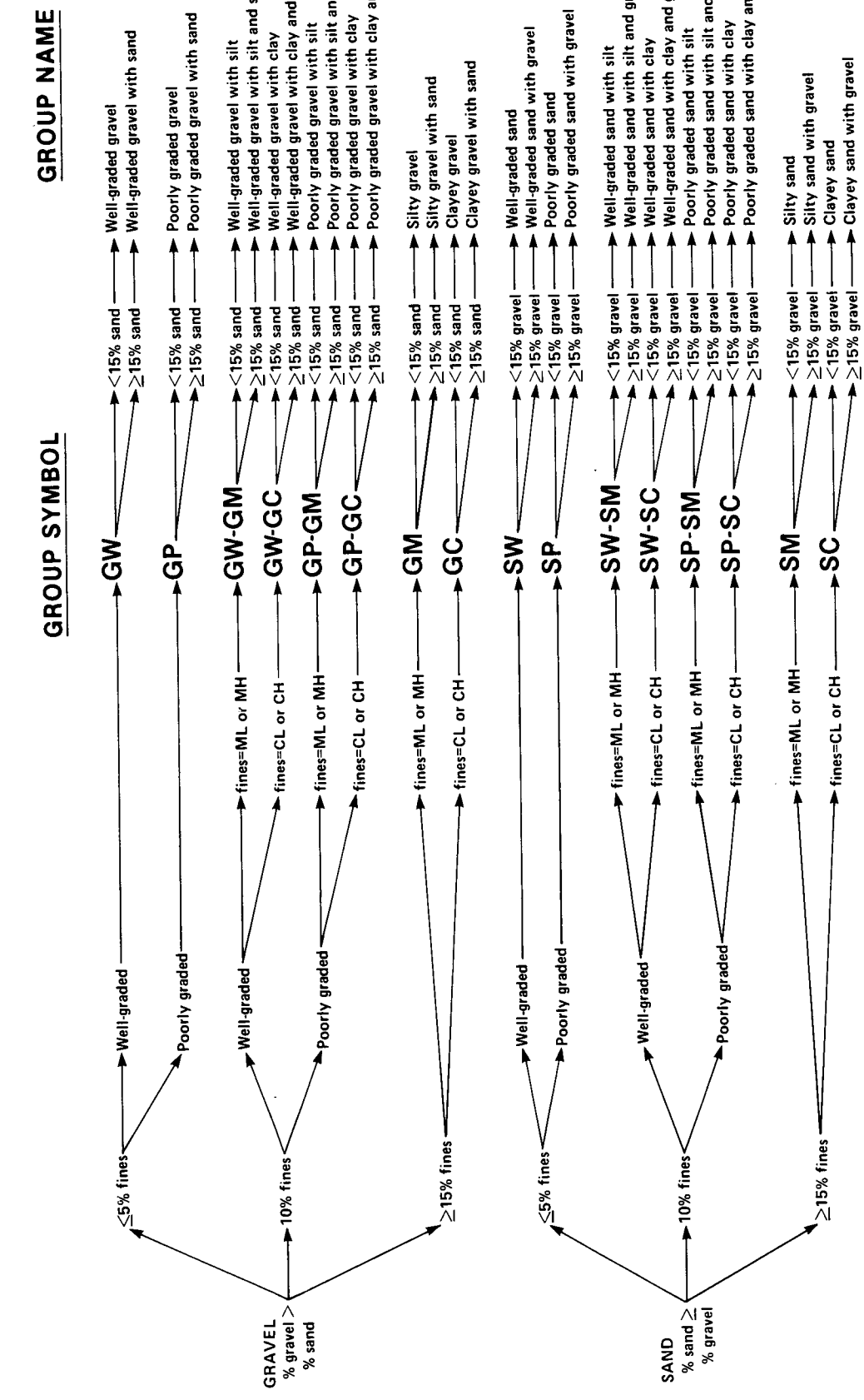

Figure 2. – Flowchart for identifying coarse-grained soils (less than 50% fines) — visual-manual method.

that do not distinctly place the soil into a specific group (see app. X3).

4. Significance and Use

4.1 The descriptive information required in this procedure can be used to describe a soil to aid in the evaluation of its significant properties for engineering use.

4.2 The descriptive information required in this procedure should be used to supplement the classification of a soil as determined in USBR 5000.

4.3 This procedure may be used in identifying soils using the classification group symbols and names as prescribed in USBR 5000. Since the names and symbols used in this procedure to identify the soils are the same as those used in USBR 5000, it shall be clearly stated in reports, etc., that the classification symbol and name are based on the visual-manual procedures.

4.4 This procedure is to be used not only for identification of soils in the field but also in the office, in the laboratory, or wherever soil samples are inspected and described.

4.5 The procedure has particular value in grouping similar soil samples so that only a minimum number of laboratory tests need be run for positive soil classification.

NOTE 2.–The ability to describe and identify soils correctly is learned more readily under the guidance of experienced personnel, but it also may be acquired systematically by comparing numerical laboratory test results for typical soils of each type with their visual and manual characteristics.

4.6 When describing and identifying soil samples from a given boring, test pit, or group of borings or pits, it is not necessary to follow all of the processes in this procedure for every sample. Soils which appear to be similar can be grouped together. One sample from the group can be completely described and identified, with the others referred to "as similar" based on performing only a few of the descriptive and identification processes described in this procedure.

5. Terminology

5.1 Definitions are in accordance with USBR 3900. Terms of particular significance are:

5.1.1 *Boulder.*–A particle of rock that will not pass a 12-inch (300-mm) square opening.

5.1.2 *Cobble.*–A particle of rock that will pass a 12-inch (300-mm) square opening and be retained on a 3-inch (75-mm) U.S.A. Standard sieve.

5.1.3 *Peat.*–A soil composed primarily of vegetable tissue in various stages of decomposition with an organic odor, a dark brown to black color, a spongy consistency, and a texture ranging from fibrous to amorphous (ASTM D 2487-83).

5.2 *Terms Specific to This Designation*:

5.2.1 *Gravel.*–Particles of rock that will pass a 3-inch (75-mm) sieve and be retained on a No. 4 (4.75-mm) sieve with the following subdivisions:

Coarse	— Passes 3-inch (75-mm) sieve and retained on 3/4-inch (19.0-mm) sieve
Fine	— Passes 3/4-inch (19.0-mm) sieve and retained on No. 4 (4.75-mm) sieve

5.2.2 *Sand.*–Particles of rock that will pass a No. 4 (4.75-mm) sieve and be retained on a No. 200 (75-μm) sieve with the following subdivisions:

Coarse	— Passes No. 4 (4.75-mm) sieve and retained on No. 10 (2.00-mm) sieve
Medium	— Passes No. 10 (2.00-mm) sieve and retained on No. 40 (425-μm) sieve
Fine	— Passes No. 40 (425-μm) sieve and retained on No. 200 (75-μm) sieve

5.2.3 *Clay.*–Soil passing the No. 200 (75-μm) U.S.A. Standard sieve that exhibits plasticity (putty-like properties) within a range of moisture contents, and which exhibits considerable strength when air-dried. For classification, a clay is a fine-grained soil, or the fine-grained portion of a soil, having a plasticity index equal to or greater than 4 and the plot of plasticity index versus liquid limit falls on or above the "A"-line (see fig. 3, USBR 5000).

5.2.4 *Silt.*–Material passing the No. 200 (75-μm) U.S.A. Standard sieve that is nonplastic or very slightly plastic and that exhibits little or no strength when air-dried (ASTM). For classification, a silt is a fine-grained soil, or the fine-grained portion of a soil, having a plasticity index less than 4 or if the plot of plasticity index versus liquid limit falls below the "A"-line (see fig. 3, USBR 5000).

5.2.5 *Organic Clay.*–A clay with sufficient organic content to influence the soil properties. For classification, an organic clay is a soil that would be classified as a clay except that its liquid limit value after ovendrying is less than 75 percent of its liquid limit value before ovendrying.

5.2.6 *Organic Silt.*–A silt with sufficient organic content to influence the soil properties. For classification, an organic silt is a soil that would be classified as a silt except that its liquid limit value after ovendrying is less than 75 percent of its liquid limit value before ovendrying.

6. Apparatus

6.1 *Required Apparatus*:

6.1.1 Small supply of water.

6.1.2 Pocket knife or small spatula.

6.2 *Useful Auxiliary Apparatus*:

6.2.1 Small bottle of dilute hydrochloric acid, one part HCl (10 N) to three parts distilled water.

6.2.2 Small test tube and stopper, or jar with a lid.

6.2.3 Dish for wash test.

6.2.4 Small hand lens.

6.2.5 Ruler.

7. Precautions

7.1 When preparing the dilute HCl (hydrochloric acid) solution of one part concentrated HCl (10 N) to three parts of distilled water, slowly add acid into water following

necessary safety precautions. Handle with caution and store safely. If solution comes in contact with skin, rinse thoroughly with water.

CAUTION.–Do not add water to acid.

8. Sampling

8.1 The sample shall be considered to be representative of the stratum, from where it was obtained, by an appropriate accepted or standard procedure.

NOTE 3.–The sampling procedure should be identified as having been conducted in accordance with a USBR procedure or an ASTM standard, or other appropriate standard or procedure.

8.2 The sample shall be carefully identified as to origin.

NOTE 4.–Remarks as to the origin may take the form of a boring number and sample number in conjunction with a job number, a geologic stratum, a pedologic horizon, or a location description with respect to a permanent monument, grid system, or station number and offset with respect to a stated centerline, and a depth or elevation.

8.3 For accurate description and identification, the minimum amounts of the specimen to be examined shall be in accordance with the following schedule:

Maximum particle size, sieve opening		*Minimum specimen size, dry mass*	
mm	in	kg	lbm
4.75	No. 4	0.1	0.2
9.5	3/8	0.25	0.5
19.0	3/4	1.1	2.5
37.5	1-1/2	10	20
75.0	3	70	150

NOTE 5.–If random, isolated particles are encountered that are significantly larger than the particles in the soil matrix, the soil matrix can be accurately described and identified in accordance with the above schedule.

8.4 If the field sample or specimen being examined is smaller than the minimum amount, the report shall include an appropriate remark.

9. Descriptive Information

9.1 Describe the *angularity* of the sand (coarse sizes only), gravel, cobbles, and boulders as rounded, subrounded, subangular, or angular as indicated by the criteria in table 1 and on figure 3. A range of angularity may be stated such as subrounded to rounded.

9.2 Describe the *shape* of the gravel, cobbles, and boulders as flat, elongated, or flat and elongated if they meet the criteria in table 2 and on figure 4; otherwise, do not remark. Indicate the fraction of particles having that shape such as one-third of gravel particles are flat.

9.3 Describe the *color*. Color is an important property in identifying organic soils and within a given locality it may also be useful in identifying materials of similar geologic origin. If the sample contains layers or patches of varying colors, this should be noted and all representative colors should be described. Color should be described for moist samples. If color represents a dry condition, this should be stated in the report.

9.4 Describe the *odor* if organic or unusual. Soils containing a significant amount of organic material usually have a distinctive odor of decaying vegetation. This is especially apparent in fresh samples; but if the samples

Table 1. – Criteria for describing angularity of coarse-grained particles (see fig. 3).

Rounded	– Particles have smoothly curved sides and no edges
Subrounded	– Particles have nearly plane sides but have well-rounded corners and edges
Subangular	– Particles are similar to angular description but have rounded edges
Angular	– Particles have sharp edges and relatively plane sides with unpolished surfaces

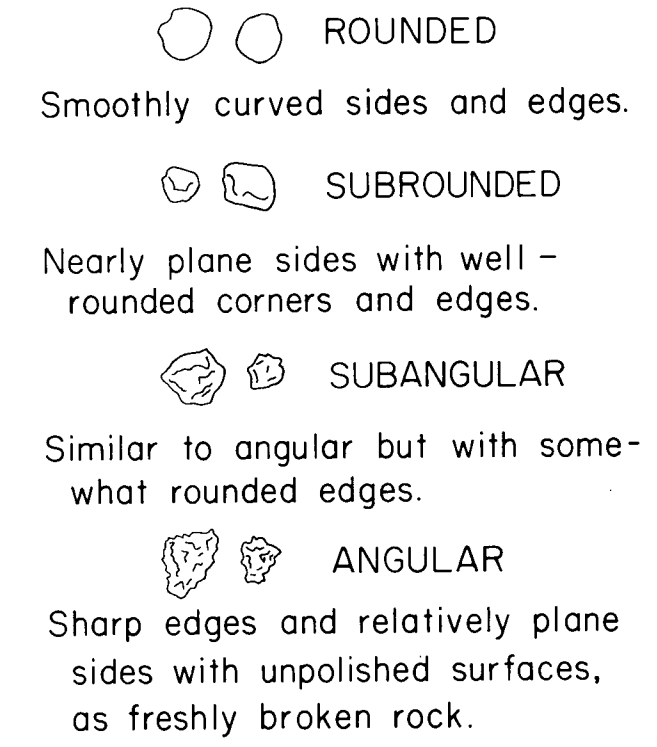

Figure 3. – Typical angularity of coarse-grained particles.

Table 2. – Criteria for describing particle shape (see fig. 4).

The particle shape shall be described as follows where length, width, and thickness refer to the greatest, intermediate, and least dimensions of a particle, respectively.

Flat	– Particles with $\frac{\text{width}}{\text{thickness}} > 3$
Elongated	– Particles with $\frac{\text{length}}{\text{width}} > 3$
Flat and elongated	– Particles meet criteria for both flat and elongated

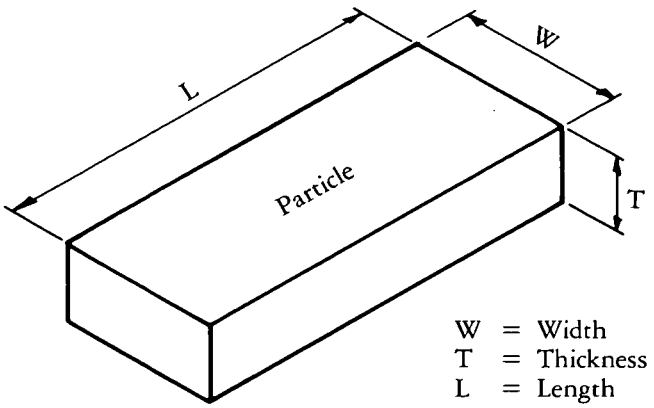

Flat: $W/T > 3$
Elongated: $L/W > 3$
Flat and Elongated: meets both criteria

Figure 4. – Criteria for particle shape.

are dried, the odor may often be revived by heating a moistened sample. Describe the odor if unusual (petroleum product, chemical, etc.).

9.5 Describe the *moisture condition* as dry, moist, or wet as indicated by the criteria in table 3.

9.6 Describe the *reaction with HCl* as none, weak, or strong as indicated by the criteria in table 4. Since calcium carbonate is a common cementing agent, a report of its presence on the basis of the reaction with dilute HCl is important.

9.7 For intact fine-grained soil, describe the *consistency* as very soft, soft, firm, hard, or very hard as indicated by the criteria in table 5. This observation is inappropriate for disturbed soils or soils with significant amounts of gravel.

9.8 Describe the *cementation* of intact coarse-grained soils as weak, moderate, or strong as indicated by the criteria in table 6.

9.9 Describe the *structure* of intact soils according to the criteria in table 7.

9.10 For gravel and sand components, describe the range of particle sizes within each component as defined in subparagraphs 5.2.1 and 5.2.2 (for example: about 20 percent fine to coarse gravel, about 40 percent fine to coarse sand).

9.11 Describe the *maximum particle size* found in the sample.

9.11.1 If the maximum particle size is a sand size, describe as fine, medium, or coarse as defined in subparagraph 5.2.2 (for example: maximum size, medium sand).

9.11.2 If the maximum particle size is a gravel size, describe maximum particle size in millimeters as the smallest sieve opening that the particle would pass [for example: maximum size, 37.5 mm (would pass 37.5-mm-square opening but not a 19.0-mm-square opening)].

9.11.3 If the maximum particle size is a cobble or boulder size, describe the maximum dimension of the largest particle (for example: maximum dimension, 400 mm). Use 25-mm increments from 75 to 300 mm (cobbles) and 100-mm increments for particles larger than 300 mm (boulders).

9.12 Describe the *hardness* of coarse sand and larger particles as hard or state what happens when the particles are hit by a hammer (e.g., gravel-size particles fracture with considerable hammer blow, some gravel-size particles crumble with hammer blow). Hard means particles do not crack, fracture, or crumble under a hammer blow.

Table 3. – Criteria for describing moisture condition.

Dry	– Absence of moisture, dusty, dry to the touch
Moist	– Damp but no visible water
Wet	– Visible free water, usually soil is below water table

Table 4. – Criteria for describing the reaction with HCl.

None	– No visible reaction
Weak	– Some reaction, with bubbles forming slowly
Strong	– Violent reaction, with bubbles forming immediately

Table 5. – Criteria for describing consistency.

Very soft	– Thumb penetrates soil more than 1 inch (25 mm)
Soft	– Thumb penetrates soil about 1 inch (25 mm)
Firm	– Thumb indents soil about 1/4 inch (6 mm)
Hard	– Thumb cannot indent soil but readily indented with thumbnail
Very hard	– Thumbnail cannot indent soil

Table 6. – Criteria for describing cementation.

Weak	– Crumbles or breaks with handling or little finger pressure
Moderate	– Crumbles or breaks with considerable finger pressure
Strong	– Will not crumble or break with finger pressure

Table 7. – Criteria for describing structure.

Stratified	– Alternating layers of varying material or color with layers at least 1/4 inch (6 mm) thick; note thickness
Laminated	– Alternating layers of varying material or color with the layers less than 1/4 inch (6 mm) thick; note thickness
Fissured	– Breaks along definite planes of fracture with little resistance to fracturing
Slickensided	– Fracture planes appear polished or glossy, sometimes striated
Blocky	– Cohesive soil that can be broken down into small angular lumps which resist further breakdown
Lensed	– Inclusion of small pockets of different soils, such as small lenses of sand scattered through a mass of clay; note thickness
Homogeneous	– Same color and appearance throughout

9.13 Additional comments should be noted such as:
Presence of roots or root holes
Difficulty in drilling or augering hole
Caving of trench or hole
Presence of mica

9.14 A local or commercial name and/or a geologic interpretation for the soil may be added if identified as such.

9.15 A classification or identification of the soil according to other classification systems may be added if identified as such.

10. Identification of Peat

10.1 A sample composed primarily of vegetable tissue in various stages of decomposition that has a fibrous to amorphous texture—usually a dark brown to black color—and an organic odor should be designated as a highly organic soil and shall be identified as peat, PT, and not subjected to the identification procedures described hereafter.

11. Specimen Preparation for Identification

11.1 The soil identification portion of this procedure is based on the minus 3-inch (75-mm) particle sizes. The plus 3-inch (75-mm) particles must be removed, manually, for a loose sample, or mentally evaluated, for an intact sample before classifying the soil.

11.2 Estimate and note the percentage of cobbles and the percentage of boulders. Performed visually, these estimates will be on the basis of volume percentage.

NOTE 6.–Since the percentages of the particle-size distribution in USBR 5000 are by dry mass and the estimates of percentages for gravel, sand, and fines in this procedure are by dry mass, it is recommended that the report state that the percentages of cobbles and boulders are by volume.

11.3 Of the fraction of the soil smaller than 3 inches (75 mm), estimate and note the percentage, by dry mass, of the gravel, sand, and fines. (See app. X4 for suggested procedures.)

NOTE 7.–Since the particle-size components appear visually on the basis of volume, considerable experience is required to estimate the percentages on the basis of dry mass. Frequent comparisons with laboratory gradation analyses should be made.

11.3.1 The percentages shall be estimated to the nearest 5 percent. The percentages of gravel, sand, and fines must add up to 100 percent.

11.3.2 If one of the components is present, but not in sufficient quantity to be considered 5 percent of the minus 3-inch (75-mm) portion, indicate its presence by the term *trace* (for example: trace of fines). A trace is not to be considered in the total of 100 percent for the components.

12. Preliminary Identification Procedure

12.1 The soil is *fine grained* if it contains 50 percent or more fines; follow paragraph 13.

12.2 The soil is *coarse grained* if it contains less than 50 percent fines; follow paragraph 14.

13. Procedure for Identifying Fine-Grained Soils

13.1 *Selection.*–Select a representative sample of the material for examination. Remove particles larger than the No. 40 sieve (medium sand and larger) until a specimen equivalent to about a handful of material is available. Use this specimen for performing the dry strength, dilatancy, and toughness tests.

13.2 *Dry Strength.*–From the specimen, select enough material to mold into a ball about 1 inch (25 mm) in diameter. Mold the material until it has the consistency of putty; add water if necessary.

13.2.1 From the molded material, make at least three test specimens. A test specimen shall be a ball of material about 1/4 inch (6 mm) in diameter. Allow the test specimens to dry in air or sun or dry by artificial means as long as the temperature does not exceed 140 °F (60 °C).

13.2.2 If the test specimen contains natural dry lumps, those that are about 1/4 inch (6 mm) in diameter may be used in place of the molded balls.

NOTE 8.–The process of molding and drying usually produces higher strengths than are found in natural dry lumps of soil.

13.2.3 Test the strength of the dry balls or lumps by crushing between the fingers and note the strength as none, low, medium, high, or very high according to the criteria in table 8. If natural dry lumps are used, do not use the results of any of the lumps that are found to contain particles of coarse sand.

13.2.4 The presence of high-strength water-soluble cementing materials, such as calcium carbonate, may cause exceptionally high dry strengths. The presence of calcium carbonate usually can be detected from the intensity of the reaction with dilute hydrochloric acid (see subpar. 9.6).

13.3 *Dilatancy.*–From the specimen, select enough material to mold into a ball about 1/2 inch (12 mm) in diameter. Mold the material; add water if necessary until it has a soft, but not sticky, consistency.

13.3.1 Smooth the soil ball in the palm of one hand with the blade of a knife or small spatula. Shake horizontally, striking the side of the hand vigorously against the other hand several times. Note the reaction of water appearing on the surface of the soil. Squeeze the sample

Table 8. – Criteria for describing dry strength.

None	– The dry specimen crumbles into powder with mere pressure of handling.
Low	– The dry specimen crumbles into powder with some finger pressure.
Medium	– The dry specimen breaks into pieces or crumbles with considerable finger pressure.
High	– The dry specimen cannot be broken with finger pressure. Specimen will break into pieces between thumb and a hard surface.
Very High	– The dry specimen cannot be broken between the thumb and a hard surface.

by closing the hand or pinching the soil between the fingers and note reaction as none, slow, or rapid according to the criteria in table 9. The reaction is the speed at which water appears while shaking and disappears while squeezing.

13.4 *Toughness.*–Following completion of the dilatancy test, shape the test specimen into an elongated pat and roll by hand on a smooth surface or between the palms into a thread about 1/8 inch (3 mm) in diameter. (If the sample is too wet to roll easily, it should be spread out into a thin layer and allowed to lose some water by evaporation.) Fold the sample threads and reroll repeatedly until the thread crumbles at a diameter of about 1/8 inch (3 mm). The thread will crumble at a diameter of 1/8 inch (3 mm) when the soil is near the plastic limit. Note the pressure required to roll the thread near the plastic limit. Also, note the strength of the thread. After the thread crumbles, the pieces should be lumped together and kneaded until the lump crumbles. Note the toughness of the material during kneading.

13.4.1 Describe the toughness of the thread and lump as low, medium, or high according to the criteria in table 10.

13.5 *Plasticity.*–On the basis of observations made during the toughness test, describe the plasticity of the material according to the criteria given in table 11.

13.6 *Inorganic/Organic.*–Decide whether the soil is an *inorganic* or an *organic* fine-grained soil (see subpar. 13.8). If inorganic, follow subparagraph 13.7.

13.7 *Identification of Inorganic Fine-Grained Soils*:

13.7.1 Identify the soil as a *lean clay*, CL, if the soil has medium to high dry strength, none to slow dilatancy, and medium toughness and plasticity (see table 12).

13.7.2 Identify the soil as a *fat clay*, CH, if the soil has high to very high dry strength, no dilatancy, and high toughness and plasticity (see table 12).

13.7.3 Identify the soil as a *silt*, ML, if the soil has none to low dry strength, slow to rapid dilatancy, and low toughness and plasticity or is nonplastic (see table 12).

Table 9. – Criteria for describing dilatancy.

None	– No visible change in the specimen
Slow	– Water appears slowly on the surface of the specimen during shaking and does not disappear or disappears slowly upon squeezing
Rapid	– Water appears quickly on the surface of the specimen during shaking and disappears quickly upon squeezing

Table 10. – Criteria for describing toughness.

Low	– Only slight pressure is required to roll the thread near the plastic limit. The thread and the lump are weak and soft.
Medium	– Medium pressure is required to roll the thread to near the plastic limit. The thread and the lump have medium stiffness.
High	– Considerable pressure is required to roll the thread to near the plastic limit. The thread and the lump have very high stiffness.

Table 11. – Criteria for describing plasticity.

Nonplastic	– A 1/8-inch (3-mm) thread cannot be rolled at any moisture content.
Low	– The thread can be barely rolled and the lump cannot be formed when drier than the plastic limit.
Medium	– The thread is easy to roll and not much time is required to reach the plastic limit. The thread cannot be rerolled after reaching the plastic limit. The lump crumbles when drier than the plastic limit.
High	– It takes considerable time rolling and kneading to reach the plastic limit. The thread can be rerolled several times close to the plastic limit. The lump can be formed without crumbling when drier than the plastic limit.

Table 12. – Identification of inorganic fine-grained soils from manual tests.

Soil symbol	Dry strength	Dilatancy	Toughness
ML	None to low	Slow to rapid	Low or thread cannot be formed
CL	Medium to high	None to slow	Medium
MH	Low to medium	None to slow	Low to medium
CH	High to very high	None	High

13.7.4 Identify the soil as an *elastic silt*, MH, if the soil has low to medium dry strength, none to slow dilatancy, and low to medium toughness and plasticity (see table 12).

NOTE 9.–These properties for elastic silt are similar to those for a lean clay. However, the silt will dry much faster on the hand and have a smooth, silky feel when dry. Some soils which would classify as elastic silt, MH, according to the criteria in USBR 5000 are visually difficult to distinguish from lean clay, CL. It may be necessary to perform laboratory testing for proper identification.

13.8 *Identification of Organic Fine-Grained Soils*:

13.8.1 Identify the soil as an *organic soil*, OL/OH, if the soil contains enough organic particles to influence the soil properties. Organic soils usually have a dark brown to black color and may have an organic odor. Often, organic soils will change color, e.g., black to brown, when exposed to the air. Some organic soils will lighten in color significantly when air dried. Normally, organic soils would not have a high toughness or plasticity. The thread for the toughness test will be spongy.

NOTE 10.–In some cases, through practice and experience, it may be possible to further identify the organic soils as organic silts or organic clays, OL or OH. Correlations between the dilatancy, dry strength, and toughness tests and laboratory tests can be made to identify organic soils in certain deposits of similar materials of known geologic origin.

13.9 If the soil is estimated to have 15 to 25 percent sand or gravel or both, the words "with sand" or "with gravel" shall be added to the group name (see figs. 1a

and 1b) (for example: lean clay with sand, CL; silt with gravel, ML). If the percent of sand is equal to the percent of gravel, use "with sand."

13.10 If the soil is estimated to have 30 percent or more sand or gravel or both, the words "sandy" or "gravelly" shall be added to the group name. Add the word "sandy" if there appears to be more sand than gravel. Add the word "gravelly" if there appears to be more gravel than sand (see figs. 1a and 1b) (for example: sandy lean clay, CL; gravelly fat clay, CH; sandy silt, ML). If the percent of sand is equal to the percent of gravel, use "sandy."

14. Procedure for Identifying Coarse-Grained Soils (contains less than 50 % fines)

14.1 The soil is a *gravel* if the percent gravel is estimated to be more than the percent sand.

14.2 The soil is a *sand* if the percent gravel is estimated to be equal to or less than the percent sand.

14.3 The soil is a *clean gravel* or *clean sand* if the percent fines is estimated to be 5 percent or less.

14.3.1 Identify the soil as a *well-graded gravel*, GW, or as a *well-graded sand*, SW, if it has a wide range of particle sizes and substantial amounts of the intermediate particle sizes.

14.3.2 Identify the soil as a *poorly graded gravel*, GP, or as a *poorly graded sand*, SP, if it consists predominantly of one size (uniformly graded) or if it has a wide range of sizes with some intermediate sizes obviously missing (gap or skip graded).

14.4 The soil is either a *gravel with fines* or a *sand with fines* if the percent fines is estimated to be 15 percent or more.

14.4.1 Identify the soil as a *clayey gravel*, GC, or a *clayey sand*, SC, if the fines are clayey as determined by the procedures in paragraph 13.

14.4.2 Identify the soil as a *silty gravel*, GM, or a *silty sand*, SM, if the fines are silty as determined by the procedures in paragraph 13.

14.5 If the soil is estimated to contain 10 percent fines, give the soil a dual identification using two group symbols.

14.5.1 The first group symbol shall correspond to a clean gravel or sand (GW, GP, SW, SP) and the second symbol shall correspond to a gravel or sand with fines (GC, GM, SC, SM).

14.5.2 The group name shall correspond to the first group symbol plus "with clay" or "with silt" to indicate the plasticity characteristics of the fines (see fig. 2) (for example: well-graded gravel with clay, GW-GC; poorly graded sand with silt, SP-SM).

14.6 If the specimen is predominantly sand or gravel but contains an estimated 15 percent or more of the other coarse-grained constituent, the words "with gravel" or "with sand" shall be added to the group name (see fig. 2) (for example: poorly graded gravel with sand, GP; clayey sand with gravel, SC).

14.7 If the field sample contained any cobbles and/or boulders, the words "with cobbles," or "with cobbles and boulders" shall be added to the group name (for example: silty gravel with cobbles, GM).

15. Report

15.1 The report shall include information as to sample origin as well as the items indicated in table 13.

NOTE 11.–Example: CLAYEY GRAVEL WITH SAND AND COBBLES (GC): About 50 percent fine to coarse, subrounded to subangular gravel; about 30 percent fine to coarse, subrounded sand; about 20 percent fines with medium plasticity, high dry strength, no dilatancy, medium toughness; original field sample had trace of hard, subrounded cobbles; maximum size, 150 mm; weak reaction with HCl.

In-place conditions: firm, homogeneous, dry, brown
Geologic interpretation: alluvial fan

NOTE 12.–Other examples of soil descriptions and identifications are given in appendixes X1 and X2.

15.2 If, in the soil description, the soil is identified using a classification group symbol and name as described in USBR 5000, it must be distinctly and clearly stated in log forms, summary tables, reports, etc., that the symbol and name are based on visual-manual procedures.

16. Precision and Accuracy

16.1 This method provides qualitative information only; therefore, a precision and accuracy statement is nonapplicable.

Table 13. - Checklist for description of soils.

1. Group name
2. Group symbol
3. Percent of cobbles and/or boulders (by volume)
4. Percent of gravel, sand and/or fines (by dry mass)
5. Particle-size range: Gravel - fine, coarse
   Sand - fine, medium, coarse
6. Particle angularity: angular subangular subrounded rounded
7. Particle shape (if appropriate): flat elongated flat and elongated
8. Maximum particle size or dimension
9. Hardness of coarse sand and larger particles
10. Plasticity of fines: nonplastic low medium high
11. Dry strength: none low medium high very high
12. Dilatancy: none slow rapid
13. Toughness: low medium high
14. Color (in moist condition)
15. Odor — mention only if organic or unusual
16. Moisture: dry moist wet
17. Reaction with HCl: none weak strong

For intact samples:

18. Consistency (fine-grained soils only): very soft soft firm hard very hard
19. Structure: stratified laminated fissured slickensided lensed homogeneous
20. Cementation: weak moderate strong
21. Local name
22. Geologic interpretation

Additional comments:

Presence of roots or root holes
Presence of mica, gypsum, etc.
Surface coatings on coarse-grained particles
Caving or sloughing of auger hole or trench sides
Difficulty in augering or excavation
Etc.

APPENDIX

X1. EXAMPLES OF VISUAL SOIL DESCRIPTIONS

X1.1 The following examples show how the information required in subparagraph 15.1 can be reported. The information that is included in descriptions should be based on individual circumstances and need.

Example 1: WELL-GRADED GRAVEL WITH SAND (GW): About 75 percent fine to coarse, hard, subangular gravel; about 25 percent fine to coarse, hard, subangular sand; trace of fines; maximum size, 75 mm; dry, brown; no reaction with HCl.

Example 2: SILTY SAND WITH GRAVEL (SM): About 60 percent predominantly fine sand; about 25 percent fines with low plasticity, low dry strength, rapid dilatancy, low toughness; about 15 percent fine, hard, subrounded gravel (a few gravel-size particles fractured with hammer blow); maximum size, 20 mm; no reaction with HCl. Note: field sample size smaller than recommended.

In-place conditions — firm, stratified and contains lenses of silt 1 to 2 inches thick, moist, brown to gray; in-place dry unit weight was 106 lbf/ft^3 and in-place moisture was 9 percent.

Example 3: ORGANIC SOIL (OL/OH): About 100 percent fines with low plasticity, slow dilatancy, low dry strength, low toughness; wet, dark brown, organic odor; weak reaction with HCl.

Example 4: SILTY SAND WITH ORGANIC FINES (SM): About 75 percent fine to coarse, hard, subangular reddish sand; about 25 percent organic and dark brown nonplastic fines, no dry strength, slow dilatancy; wet; maximum size, coarse sand; weak reaction with HCl.

Example 5: POORLY GRADED GRAVEL WITH SILT, SAND, COBBLES AND BOULDERS (GP-GM): About 75 percent fine to coarse, hard, subrounded to subangular gravel; about 15 percent fine, hard, subrounded to subangular sand; about 10 percent nonplastic fines; moist, brown; no reaction with HCl. Original field sample had a trace of hard, subrounded cobbles and a trace of hard, subrounded boulders, having a maximum dimension of 500 mm.

X2. USING THE IDENTIFICATION METHOD AS A DESCRIPTIVE SYSTEM FOR SHALE, CLAYSTONE, SHELLS, SLAG, CRUSHED ROCK, ETC.

X2.1 The identification method may be used as a descriptive system applied to materials that exist in situ as shale, claystone, sandstone, siltstone, mudstone, etc., but convert to soils after field or laboratory processing (crushing, slaking, etc.).

X2.2 Materials such as shells, crushed rock, slag, etc., should be identified as such. However, the processes used in this procedure for describing the particle size and plasticity characteristics may be used in the description of the material. If desired, an identification using a group name and symbol according to this method may be assigned to aid in describing the material.

X2.3 The group symbol(s) and group names should be placed in quotation marks or noted with some type of distinguishing symbol (see examples).

X2.4 Examples of how group names and symbols could be incorporated into a descriptive system for materials that are not naturally occurring soils follow.

Example 1: SHALE CHUNKS: Retrieved as 2- to 4-inch pieces of shale from power auger hole, dry, brown, no reaction with HCl. After slaking in water for 24 hours, material identified as "SANDY LEAN CLAY (CL)" — About 60 percent fines with medium plasticity, high dry strength, no dilatancy, medium toughness; about 35 percent fine to medium sand; about 5 percent gravel-size pieces of shale.

Example 2: CRUSHED SANDSTONE: Product of commercial crushing operation; "POORLY GRADED SAND WITH SILT (SP-SM)" — About 90 percent fine to medium sand; about 10 percent nonplastic fines; maximum size, medium sand; dry, reddish-brown; strong reaction with HCl.

Example 3: BROKEN SHELLS: Natural deposit of shells; "POORLY GRADED GRAVEL WITH SAND (GP)" — About 60 percent gravel-size broken shells; about 35 percent sand and sand-size shell pieces; about 5 percent fines.

Example 4: CRUSHED ROCK: Processed from gravel and cobbles in Pit No. 7; "POORLY GRADED GRAVEL (GP)" — About 90 percent fine, hard, angular gravel-size particles; about 10 percent coarse, hard, angular sand-size particles; maximum size, 20 mm; dry, tan; no reaction with HCl.

X3. SUGGESTED PROCEDURE FOR USING A BORDERLINE SYMBOL FOR SOILS WITH TWO POSSIBLE IDENTIFICATIONS

X3.1 Since this practice is based on estimates of particle size distribution and plasticity characteristics, it may be difficult to clearly identify the soil as belonging to one category. To indicate that the soil may fall into one of two possible basic groups, a borderline symbol may be used with the two symbols separated by a slash (for example: SC/CL, CL/CH).

X3.1.1 A borderline symbol may be used when the percent fines is estimated to be between 45 and 55 percent. One symbol should be for a coarse-grained soil with fines and the other for a fine-grained soil (for example: GM/ML, CL/SC).

X3.1.2 A borderline symbol may be used when the percent sand and the percent gravel is estimated to be about the same (for example: GP/SP, SC/GC, GM/SM). It is practically impossible to have a soil that would have a borderline symbol of GW/SW.

X3.1.3 A borderline symbol may be used when the soil could be either well graded or poorly graded (for example: GW/GP, SW/SP).

X3.1.4 A borderline symbol may be used when the soil could either be a silt or a clay (for example: CL/ML, CH/MH, SC/SM).

X3.1.5 A borderline symbol may be used when a fine-grained soil has properties that indicate that it is at the boundary between a soil of low compressibility and a soil of high compressibility (for example: CL/CH, MH/ML).

X3.2 The order of the borderline symbols should reflect similarity to surrounding or adjacent soils (for example: soils in a borrow area have been identified as CH. One sample is considered to have a borderline symbol of CL and CH. To show similarity, the borderline symbol should be CH/CL).

X3.3 The group name for a soil with a borderline symbol should be the group name for the first symbol, except for:

CL/CH – lean to fat clay
ML/CL – clayey silt
CL/ML – silty clay

X3.4 The use of a borderline symbol should not be used indiscriminately. Every effort should be made to place the soil into a single group.

X4. SUGGESTED PROCEDURES FOR ESTIMATING THE PERCENT OF GRAVEL, SAND, AND FINES IN A SOIL SAMPLE

X4.1 *Jar Method.*–The relative percentage of coarse- and fine-grained material may be estimated by thoroughly shaking a mixture of soil and water in a test tube or jar, and then allowing the mixture to settle. The coarse particles will fall to the bottom and successively finer particles will be deposited with increasing time; the sand sizes will fall out of suspension in 20 to 30 seconds. The relative proportions can be estimated from the relative volume of each size separate. This method should be correlated to particle-size laboratory determinations.

X4.2 *Visual Method.*–Mentally visualize the gravel size particles placed in a sack (or other container) or sacks. Then, do the same with the sand size particles and the fines. Then, mentally compare the number of sacks to estimate the percentage of plus No. 4 sieve size and minus No. 4 sieve size present. The percentages of sand and fines in the minus sieve size No. 4 material then can be estimated from the wash test (see subpar. X4.3).

X4.3 *Wash Test* (for relative percentages of sand and fines).–Select and moisten enough minus No. 4 sieve size material to form a 1-inch (25-mm) cube of soil. Cut the cube in half, set one-half to the side, and place the other half in a small dish. Wash and decant the fines out of the material in the dish until the wash water is clear, and then compare the two samples and estimate the percentage of sand and fines. Remember that the percentage is based on mass, not volume. However, the volume comparison will provide a reasonable indication of grain size percentages.

While washing, it may be necessary to break down lumps of fines with a finger to get the correct percentages.

UNITED STATES DEPARTMENT OF THE INTERIOR
BUREAU OF RECLAMATION

USBR 5100-89

PROCEDURE FOR

PERFORMING RADIOGRAPHIC INSPECTION OF SOIL OR ROCK SAMPLES

INTRODUCTION

This procedure is under the jurisdiction of the Geotechnical Services Branch, code D-3760, Research and Laboratory Services Division, Denver Office, Denver, Colorado. The procedure is issued under the fixed designation USBR 5100. The number immediately following the designation indicates the year of acceptance or the year of last revision.

1. Scope

1.1 This designation outlines the procedure for performing radiographic inspection of soil or rock samples.

1.2 This procedure is nondestructive to the sample and allows the user to determine effects of sampling and natural variations within samples by the relative penetration of X-rays through the sample.

1.3 Radiographs, in the form of X-ray film or prints made from X-ray film, should be interpreted only by individuals trained in X-ray interpretation.

1.4 Radiograph prints made from paper film are generally suitable for determining portions of undisturbed samples acceptable for further laboratory testing.

2. Applicable Documents

2.1 *USBR Procedures*:
USBR 3900 Standard Definitions of Terms and Symbols Relating to Soil Mechanics
USBR 7105 Performing Undisturbed Soil Sampling by Mechanical Drilling Methods

2.2 *USBR Document*:
Standards for Radiation and Laser Safety [1][1]

3. Summary of Method

3.1 Undisturbed tube-type samples or other undisturbed samples are placed as received in a sample holder approximately 30 to 72 inches from the X-ray source. Paper film or X-ray film is placed adjacent to the sample and exposed to X-rays that penetrate the sample. The film is then developed and processed using conventional techniques. The relative penetration of X-rays through the sample is evidenced as shades of gray on the exposed film. Processed film is studied to determine the degree of disturbance to the sample, variations or layering within the sample, or the portion(s) of the sample suitable for further laboratory testing.

[1] Number in brackets refers to the reference.

4. Significance and Use

4.1 Many geotechnical tests require utilization of undisturbed, representative samples of soil or rock deposits. The quality of these samples depends on many factors, and some samples obtained by undisturbed sampling methods exhibit inherent anomalies as sampling procedures may cause disturbances of varying type and intensity. These anomalies and disturbances are often not detectable by visual inspection of the undisturbed samples before or after laboratory testing. It is, therefore, necessary to determine the presence and the extent of these disturbances and anomalies before testing or before destruction of the sample by testing.

4.2 Radiography results provide the user a visual representation of the internal structure of the soil sample and assist in evaluating the sample.

4.2.1 An indication is given of the appropriateness of sampling methods used for detecting: (1) the flaws in sampling methods; (2) the presence of fissures or natural or induced shear planes; (3) the presence of natural intrusions such as gravel or shells at critical regions in samples; (4) the presence of organic matter, or sand, silt, or clay seams; (5) the presence of foreign materials such as construction debris; and (6) the intensity of some of the unavoidable disturbances caused by sampling.

4.2.2 The effects of sampling disturbance are often visible. This disturbance is evidenced by turning of the edges of various thin layers in varved soils; large disturbances caused in soft soils; shear planes induced by sampling and/or extrusion; effects of overdriving samplers; the presence of cuttings in sampling tubes; or the effects of using bent, corroded, or nonstandard tubes for sampling.

4.2.3 The presence of large voids, or channels developed by natural or artificial leaching of soil components may be seen.

5. Terminology

5.1 Definitions are in accordance with USBR 3900.

5.2 Terms and definitions relative to radiography are in accordance with the *Standards for Radiation and Laser Safety.*[1]

6. Apparatus

6.1 *Equipment Unique to This Procedure*:

6.1.1 *X-ray Source.*–X-ray generating equipment with an output voltage of 100 to 300 kV and peak current of approximately 10 mA with remote operating control panel. This equipment will provide the intensity of radiation required for the variety of samples obtained in accordance with USBR 7105 and the range of commercially available paper films and X-ray films.

NOTE 1.–Certain samples may require equipment with special operating features such as beryllium window X-ray tubes for low-voltage operation, fine focus X-ray tube for maximum resolution, etc. Special radiography equipment and specific applications should be fully discussed with equipment manufacturers before purchasing equipment.

6.1.2 *Sample Holder.*–Fixture capable of holding undisturbed soil or rock sample, film holder, and intensifying lead screens during X-ray exposure.

6.1.3 *Lead Shielding.*–Portable or permanent lead shielding to prevent exposure of personnel to X-rays during equipment operation.

6.1.4 *Personal Film Badge or Dosimeter.*–Device which X-ray equipment operator(s) must wear while working with or in proximity of operating X-ray equipment.

6.1.5 *Intensifying Screens.*–Sheets of thin lead used on the top, bottom, and rear of the undisturbed soil sample to improve radiographic image quality by reducing backscatter radiation. For soil specimens, sheets approximately 0.15 inch (4 mm) thick have been found to work well.

6.1.6 *Film.*–Industrial-type X-ray or paper film specified for use with industrial-type X-ray equipment and cut to suit the sample size.

6.1.7 *Film Holders.*–Light-resistant film containers, sized to fit precut film, and used to protect unexposed film.

6.1.8 *Lead Characters.*–Alphanumeric lead pieces used to permanently image sample index number, view axis (0 and 90° axis markers), top of sample, and date on finished X-ray prints.

6.1.9 *Darkroom.*–A light resistant room for developing or processing X-ray or paper film, complete with safelights, developing tanks, developing fluids, temperature-controlled tapwater, and film drying equipment.

6.1.10 *Light Screens.*–Platform or wall-mounted screens, back lighted for viewing processed X-ray film radiographs.

6.2 *Miscellaneous Equipment.*–Measuring tape (6-ft length); tape for fastening lead characters.

7. Reagents and Materials

7.1 Follow film manufacturer instructions for reagents and materials required to process and develop X-ray and paper film.

8. Precautions

8.1 *Safety Precautions*:

8.1.1 The USBR Geotechnical Services Branch X-ray radiation safety procedures and policies are contained in the *Standards for Radiation and Laser Safety* [1]. The safety procedures and policies are in accordance with applicable Federal and State requirements for acceptable radiation safety standards. It is the responsibility of the X-ray equipment operator to read, understand, and comply with all safety procedures and policies. Failure to comply with safety procedure and policies can cause serious injury to X-ray equipment operator(s) and other personnel.

8.2 *Technical Precautions*:

8.2.1 Undisturbed samples should be stored in a temperature and humidity controlled environment to preserve in-place conditions.

8.2.2 Undisturbed samples should be handled with care while transporting to and from storage areas. X-ray work should be completed quickly to minimize the amount of time samples are out of controlled storage conditions.

8.2.3 Samples which are predominantly sand should only be placed vertically for the minimum time required for X-ray in order to prevent water drainage from top to bottom.

9. Sampling, Test Specimens, and Test Units

9.1 Undisturbed samples are obtained in accordance with USBR 7105 or other approved sampling methods.

9.2 Move undisturbed samples from humidity room or other storage location being careful to keep tube-type samples in the horizontal position during transit and handling.

10. Preparation of Apparatus

10.1 Perform the required safety checks and X-ray equipment inspection procedures outlined in Geotechnical Services Branch Policy Statement, October 15, 1984 [2].

10.2 Follow equipment manufacturer instructions to warm up the X-ray tube *if* high-voltage operation (> 150 kV) will be required *and* equipment has been inactive for 3 months or longer.

11. Calibration and Standardization

11.1 Verify that the survey meter, Panoramic Model No. 470A, is currently calibrated in accordance with the procedure required by the Nuclear Regulatory Commission. The survey meter must be recalibrated at 6-months intervals [2].

12. Conditioning

12.1 Minimize the amount of time that undisturbed samples are kept in temporary, nonhumidity controlled room storage. Keep tube-type samples in horizontal position during temporary storage.

13. Procedure

13.1 All applicable specimen information and test data are to be recorded on the "X-ray Test Data Sheet" as shown on figure 1.

7-2323 (9-85)
Bureau of Reclamation

DESIGNATION USBR 5100-89

X-RAY TEST DATA SHEET

LOCATION	SAMPLE NUMBER(S)	DATE X-RAYED	TECHNIQUE USED	SAMPLE TYPE	DATE CHECKED OUT	DATE RETURNED	SIGNATURE	TECHNICIAN
Cold Springs Dam 61E	64-89	6/9/89	250 KV 9 MA 1 min @ 72"	3" Push tube				Burhans 6/9/89
Wasco Dam 19S	63-73	10/28/89	250 KV 10 MA 2min30sec @ 48"	6" Denison				Mitchell 10/28/89

GPO 848-603

Figure 1. – X-ray test data sheet — example.

13.2 Prepare the film holder in the darkroom using the safelights to prevent accidentally exposing the film. Insert the film in the film holder so that the silver halide surface will face the sample during exposure. Fasten the alphanumeric lead characters showing the soil sample index number to the top of the sample to the film holder. Indicate the top of the sample for proper orientation.

13.3 Attach the lead characters to tube-type samples to indicate the 0 to 90 degree axis.

NOTE 2.–Tube-type samples with specimen lengths greater than approximately 15 inches may require two separate X-ray exposures to record the entire sample. For this case, attach a lead character near the center of the sample to serve as a common match point for both exposures.

13.4 Place tube-type samples in the sample holder horizontally unless otherwise specified.

13.5 Position sample holder and adjust the X-ray tube to provide a distance of 30 to 72 inches from the X-ray tube focal point to the film surface.

13.6 Adjust equipment output to the amperage and voltage levels to provide the clearest radiographic image. The amperage and voltage output levels are selected by the operator and vary with sample type, sample liner, focal distance, and exposure time. Consult X-ray project file records to select appropriate output levels for initial exposure.

13.7 Select an appropriate exposure interval using the X-ray project file records for guidance.

13.8 Expose the film and record the focal length, output levels, and exposure time.

13.9 Process and develop the exposed film in accordance with the manufacturer's instructions.

13.10 Rotate the sample to view the 90° axis and repeat subparagraphs 13.4 through 13.9.

NOTE 3.–Several trial exposures may be required to determine the combination of output levels, exposure time, and focal length that produces the clearest radiograph. For this trial and error process, it is desirable to keep the focal length and output levels constant and vary the exposure time until clear, well-defined radiographs are obtained. If exposure time variations fail to achieve the desired radiograph quality, the focal length should be varied while keeping the exposure time and output levels constant.

14. Interpretation of Results

14.1 Figures 2 and 3 show typical finished prints of X-ray film for undisturbed, tube-type soil samples.

14.2 Interpretation of X-ray radiographs should be performed only by personnel who are thoroughly trained and familiar with techniques of analyzing X-ray radiographs of undisturbed samples.

14.3 The following *general* guidelines may be used for qualitative analysis of X-ray radiographs:

14.3.1 *Voids.*–Open void spaces show as dark dots, spaces, or channels, depending on the shape of the void.

14.3.2 *Bedding.*–Horizontal, inclined, or distorted bedding shows as shades of gray easily identifiable as bedding.

14.3.3 *Turning of Edges.*–Turning or bending of edges on the sides of tube-type samples may indicate improper sampling or extrusion methods.

14.3.4 *Peat, Organic Matter, Roots.*–Peat and organic matter appear as dark or black spots while roots appear as black, irregular, often interconnected lines.

14.3.5 *Gravel, Shells, Invertebrates.*–Gravel, shells or invertebrates appear as light colored shapes, generally easily identified from their profile.

14.3.6 *Calcareous concretions.*–Concretions appear as light gray irregular spots.

14.3.7 *Natural Fissures.*–Natural fissures appear as thin dark lines. Where bedding of various layers is apparent in the radiograph, bedding will be continuous across fissures.

14.3.8 *Shear Fractures.*–Shear fractures appear as either dark lines (open fractures) or as lines identifiable only by the abrupt displacement and discontinuance of a number of bedding planes across the shear zone.

15. Report

15.1 The report is to consist of the completed "X-ray Test Data Sheet" (fig. 1) with the original radiograph or paper film print.

16. Reference

[1] Toney, David F., *Standards for Radiation and Laser Safety*, Division of Research, Bureau of Reclamation, Denver, Colorado, February 1984.

[2] Geotechnical Services Branch, Policy Statement: *Radiographic Equipment Safety Policies Inspection, and Operating Procedures*, code D-3760, Research and Laboratory Services Division, Denver Office, Denver, Colorado, October 15, 1984.

Figure 2. – X-ray radiograph showing void (dark area) and gouge zone in tube-type soil sample.

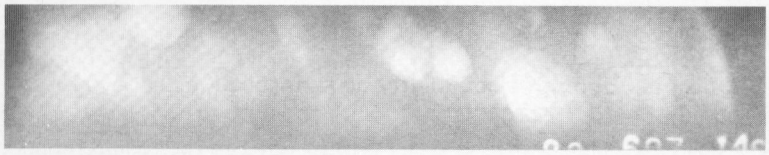

Figure 3. – X-ray radiograph showing gravel (lighter areas) in tube-type soil sample.

UNITED STATES DEPARTMENT OF THE INTERIOR
BUREAU OF RECLAMATION

USBR 5200-89

PROCEDURE FOR

PROCESSING TUBE-TYPE SAMPLES

INTRODUCTION

This procedure is under the jurisdiction of the Geotechnical Services Branch, code D-3760, Research and Laboratory Services Division, Denver Office, Denver, Colorado. The procedure is issued under the fixed designation USBR 5200. The number immediately following the designation indicates the year of acceptance or the year of last revision.

1. Scope

1.1 This designation outlines the procedure for processing tube-type samples. Tube-type samples are processed to obtain representative specimens for laboratory use.

2. Auxiliary Tests

2.1 Tube-type samples received at the Denver Office geotechnical laboratory are X-rayed in accordance with USBR 5100. The moisture content and dry unit weight of the tube sample are determined concurrently with this procedure in accordance with USBR 5300 and 5372, respectively.

3. Applicable Documents

3.1 *USBR Procedures*:
USBR 1012 Calibrating Balances or Scales
USBR 1025 Checking Sieves
USBR 5100 Performing Radiographic Inspection of Soil or Rock Samples
USBR 5205 Preparing Soil Samples by Splitting or Quartering
USBR 5300 Determining Moisture Content of Soil and Rock by the Oven Method
USBR 5325 Performing Gradation Analysis of Gravel Size Fraction of Soils
USBR 5372 Determining Unit Weight of Cylindrical Tube-Type Samples
3.2 *ASTM Standard*:
E 11 Specification for Wire-Cloth Sieve for Testing Purposes

4. Summary of Method

4.1 Appropriate lengths of tube with soil are cut from each end of the tube sample. The moisture content of each end of the sample is determined on material taken from the center of each cutoff end. Material for other physical properties testing is obtained from the material remaining in the cutoff ends of the sample. The dry unit weight of the remaining sample (center portion) is determined. The ends of the sample (center portion) are capped and waxed, and the sample is stored for further testing and/or inspection.

5. Significance and Use

5.1 Tube-type samplers are used to obtain undisturbed samples representative of in-place conditions. Once the tube sample reaches the laboratory, it is carefully handled, processed, and stored to provide undisturbed specimens of appropriate size for laboratory testing.

6. Interferences

6.1 The presence of plus U.S.A. Standard series No. 4 (4.75-mm) sieve material in a tube sample, and subsequently in a test specimen, may have an effect on the reliability of particle size analysis.

7. Apparatus

7.1 *Power Saw.*–A saw of sufficient size and power to cut the ends of tube-type samples with minimal damage to the soil sample.
7.2 *Sieve.*–U.S.A. Standard No. 4 (4.75 mm) sieve conforming to the requirements of ASTM E 11.
7.3 *Balance or Scale.*–A typical balance or scale used for this designation must be readable to 1 g and have a capacity of about 1000 g. If plus No. 4 (4.75 mm) sieve-size particles are found in the tube-type sample, a balance or scale having a larger capacity is required; refer to USBR 5300 and/or 5325 (as appropriate) for specific balance or scale requirements.
7.4 *Dish.*–Porcelain, evaporating, 300-mL capacity, about 4-1/2 inches diameter by 2 inches deep (115- by 50-mm).
7.5 *Specimen Containers.*–Containers, paper cartons, cylindrical, with lids, approximately 1-pint (0.5-L) capacity or "zip-lock" plastic bags, approximately 1-pint capacity.
7.6 *Wax.*–Microcrystalline wax for sealing the ends of the tube-type sample.
7.7 *Brush.*–Paint brush for applying wax to tube-type sample.

8. Precautions

8.1 *Safety Precautions*:

8.1.1 Safety shoes, glasses, and gloves should be worn when operating the power saw to cut the tube-type sample.

8.1.2 Gloves should be worn when waxing the sample.

8.1.3 Safety shoes and gloves are to be worn whenever handling the tube-type sample.

8.2 *Technical Precautions*:

8.2.1 Tube-type samples exhibiting one or more of the following conditions may provide erroneous test results:

- Damaged tube; dents, punctures, etc.
- Voids in sample
- Contamination of the sample with wax
- Contamination of the sample with drilling fluid
- Loss of integrity of wax seal on the tube ends
- Wood plugs which have not been prewaxed
- Presence of rust, fungus, mold, or salt crystalization on sample
- Water seeping from the sample

8.2.2 If conditions listed in subparagraph 8.2.1 or other physical defects not listed—but which could have an effect on test results—are observed, they are to be recorded on the "Moisture and Unit Weight Determination of Soil Sample in Cut Sample Tube" test form (USBR 5372).

9. Calibration and Standardization

9.1 Verify that equipment is currently calibrated in accordance with the applicable calibration procedure. If the calibration is not current, perform the calibration before using the equipment for this procedure.

USBR 1012 Calibrating Balances or Scales
USBR 1025 Checking Sieves

10. Conditioning

10.1 The wet mass of moisture content test specimens removed from tube-type samples should be determined as quickly as possible to minimize unrecorded moisture loss.

11. Procedure

11.1 Perform USBR 5100. Results from the radiographic inspection of tube-type samples should be reviewed by the responsible engineer to aid in selecting samples to be processed.

11.2 Cut test units [lengths of tube containing about 4 inches (100 mm) of soil] from each end of the tube sample.

11.3 Determine the total wet mass and the volume of the remaining center portion of the tube sample in accordance with USBR 5372.

11.4 Wax the ends of the remaining center portion of the tube sample.

11.5 Visually observe the *similarity* or *dissimilarity* of the soil in the top and bottom test units cut from the ends of the tube sample. Visually check for the presence of plus No. 4 (4.75-mm) sieve-size material.

11.6 If the top and bottom test units are of *similar* material and plus No. 4 (4.75-mm) sieve-size material is not observed, the following procedure is performed:

11.6.1 Obtain a 500-gram (minimum) sample of minus No. 4 (4.75-mm) sieve-size material from each of the top and bottom test units. These 500-gram samples are subdivided as shown on figure 1.

11.6.2 Obtain by splitting or quartering (USBR 5205) test samples that are a minimum of 200 grams from each of the top and bottom test units obtained in subparagraph 11.6.1.

11.6.3 Place the test samples obtained in subparagraph 11.6.2 in suitable containers appropriately designated "Top" and "Bottom" along with the sample index number.

11.6.4 Determine the moisture contents of the test samples obtained in subparagraph 11.6.2 in accordance with USBR 5300.

NOTE 1.–A moisture content determination is performed on both the top and bottom specimens, and the results are averaged to obtain an average moisture content value for the tube sample.

11.6.5 Combine the remaining soil from the top and bottom test units obtained in subparagraph 11.6.1.

11.6.6 Obtain by splitting or quartering three test samples that are a minimum of 200 grams each from the combined sample obtained in subparagraph 11.6.5.

11.6.7 Place each test sample in a suitable container marked with the sample index number; one container designated "MA," another "SpG," and the third "ATT," to indicate that a gradation (mechanical) analysis, a specific gravity determination, and Atterberg limits testing respectively, are to be performed.

11.6.8 Determine the dry unit weight of the center portion of the sample in accordance with USBR 5372.

11.7 If the top and bottom test units are of *dissimilar* material and plus No. 4 (4.75-mm) sieve-size material is not observed, the following procedure is performed:

11.7.1 Obtain an 800-gram (minimum) sample of minus No. 4 (4.75-mm) sieve-size material from each of the top and bottom test units. These 800-gram samples are subdivided as shown on figure 2.

11.7.2 Obtain, by splitting or quartering, four test samples from each of the top and bottom test units obtained in subparagraph 11.7.1. The test samples should be a minimum of 200 grams each.

11.7.3 Place one 200-gram test sample from each test unit in a suitable container appropriately designated "Top" and "Bottom" along with the sample index number.

11.7.4 Determine the moisture contents of the test samples obtained in subparagraph 11.7.3 in accordance with USBR 5300.

11.7.5 Place each of the remaining 200-gram test samples in a suitable container marked with the sample index number and appropriately designated "Top" or "Bottom" and "MA," "ATT," or "SpG" to indicate that a gradation (mechanical) analysis, Atterberg limits testing,

or a specific gravity determination respectively, are to be performed (see fig. 2).

11.7.6 Determine the dry unit weight of the center portion of the sample in accordance with USBR 5372.

11.8 If the top and bottom test units are of *similar* material and plus No. 4 (4.75-mm) sieve-size material is observed, the following procedure is performed (see fig. 3):

11.8.1 Visually observe the maximum particle size contained in the top and bottom test units.

11.8.2 Use the table shown on figure 3 to determine the required sample mass to be taken from the top and bottom test units in order to obtain a test sample.

11.8.3 Obtain one-half the required sample mass (if available) from each of the top and bottom test units and combine to form a sample of the required mass.

11.8.4 Separate the combined sample obtained in subparagraph 11.8.3 on a No. 4 (4.75-mm) sieve.

11.8.5 Wash material retained on the No. 4 (4.75-mm) sieve. Place the washed material in a suitable container marked with the sample index number and appropriately designated as "+No. 4 MA" to indicate that a gradation (mechanical) analysis is to be performed.

11.8.6 Obtain, by splitting or quartering, four test samples from the material that passed the No. 4 (4.75-mm) sieve. The test samples should be a minimum of 200 grams each.

11.8.7 Determine the moisture content of one of the 200-gram test samples obtained in subparagraph 11.8.6 in accordance with USBR 5300.

11.8.8 Place each of the remaining 200-gram test samples in a suitable container marked with the sample index number; one container designated "MA," one container designated "ATT," and the other "SpG," to indicate that a gradation (mechanical) analysis, Atterberg limits testing, or a specific gravity determination respectively, are to be performed (see fig. 3).

11.8.9 Determine the dry unit weight of the center portion of the sample in accordance with USBR 5372.

11.9 If the top and bottom test units are of *dissimilar* material and plus No. 4 (4.75-mm) sieve-size material is observed in both top and bottom test units, the following procedure is performed (see fig. 4):

11.9.1 Visually observe the maximum particle size contained in the top and bottom test units.

11.9.2 Use the table shown on figure 4 to determine the required sample mass to be taken from the top and bottom test units in order to obtain a test sample.

11.9.3 Obtain the required sample mass (if available) from each of the top and bottom test units.

11.9.4 Separate the material obtained in subparagraph 11.9.3 on the No. 4 (4.75-mm) sieve.

11.9.5 Wash the material retained on the No. 4 (4.75-mm) sieve.

11.9.6 Place the material retained on the No. 4 (4.75-mm) sieve in suitable containers appropriately designated "Top" or "Bottom" and "+No. 4 MA," along with the sample index number, to indicate that a gradation (mechanical) analysis is to be performed.

11.9.7 Obtain by splitting or quartering four test samples from the material that passed the No. 4 (4.75-mm) sieve from each of the top and bottom test units. The test samples should be a minimum of 200 grams each.

11.9.8 Determine the moisture content of one of the 200-gram test samples from each of the top and bottom test units obtained in subparagraph 11.9.7 in accordance with USBR 5300.

11.9.9 Place each of the remaining 200-gram test samples in a suitable container marked with the sample index number and appropriately designated "Top" or "Bottom" and "MA," "ATT," or "SpG," to indicate that a gradation (mechanical) analysis, Atterberg limits testing, or a specific gravity determination respectively, are to be performed (see fig. 4).

11.9.10 Determine the dry unit weight of the center portion of the sample in accordance with USBR 5372.

11.10 If the top and bottom test units of *dissimilar* material and plus No. 4 (4.75-mm) sieve-size material are observed in one test unit but are not observed in the other, the following procedure is performed (see fig. 5):

11.10.1 Obtain an 800-gram (minimum) sample of minus No. 4 (4.75-mm) sieve-size material from the test unit where plus No. 4 (4.75-mm) sieve-size material was not observed.

11.10.2 Obtain, by splitting or quartering, four test samples from the minus No. 4 (4.75-mm) sample obtained in subparagraph 11.10.1. The test samples should be a minimum of 200 grams each.

11.10.3 Determine the moisture content of one of the 200-gram test samples obtained in subparagraph 11.10.2 in accordance with USBR 5300.

11.10.4 Place each of the remaining 200-gram test samples in a suitable container marked with the sample index number and appropriately designated "Top" or "Bottom" and "MA," "ATT," or "SpG" to indicate that a gradation (mechanical) analysis, Atterberg limits testing, or a specific gravity determination respectively, are to be performed (see fig. 5).

11.10.5 Visually observe the maximum particle size contained in the test unit in which plus No. 4 (4.75-mm) sieve-size material was observed.

11.10.6 Use the table shown on figure 5 to determine the required sample mass to be taken from the test unit in order to obtain a test sample.

11.10.7 Remove the required mass (if available) from the test unit.

11.10.8 Separate the material obtained in subparagraph 11.10.7 on a No. 4 (4.75-mm) sieve.

11.10.9 Wash the material retained on the No. 4 (4.75-mm) sieve.

11.10.10 Place the material retained on the No. 4 (4.75-mm) sieve in a suitable container appropriately designated "Top" or "Bottom" and "+No. 4 MA," along with the sample index number, to indicate that a gradation (mechanical) analysis is to be performed.

11.10.11 Obtain, by splitting or quartering, four test samples from the material that passed the No. 4 (4.75-mm)

sieve. The test samples should be a minimum of 200 grams each.

11.10.12 Determine the moisture content of one of the 200-gram test samples obtained in subparagraph 11.10.11 in accordance with USBR 5300.

11.10.13 Place each of the remaining 200-gram test samples in a suitable container marked with the sample index number and appropriately designated "Top" or "Bottom" and "MA," "ATT," or "SpG," to indicate that a gradation (mechanical) analysis, Atterberg limits testing, or a specific gravity determination respectively, are to be performed (see fig. 5).

11.10.14 Determine the dry unit weight of the center portion of the sample in accordance with USBR 5372.

12. Calculations

12.1 Not applicable, calculations are not required for this procedure.

13. Report

13.1 A report is not required for this procedure. However, comments regarding the integrity of the tube sample as listed in subparagraph 8.2.1 should be reported on the "Moisture and Unit Weight Determination of Cylindrical Soil Sample in Cut Sample Tube" test form as given in USBR 5372.

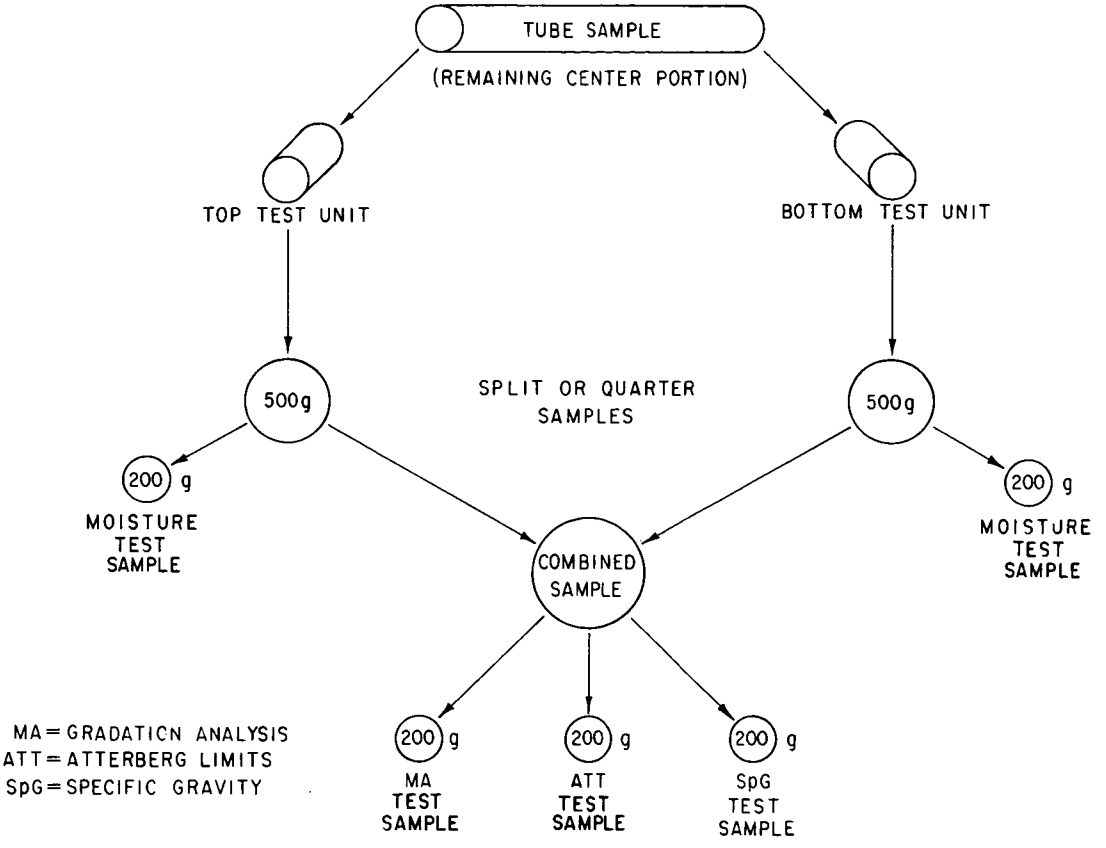

Figure 1. - Schematic of tube processing (similar material — minus No. 4).

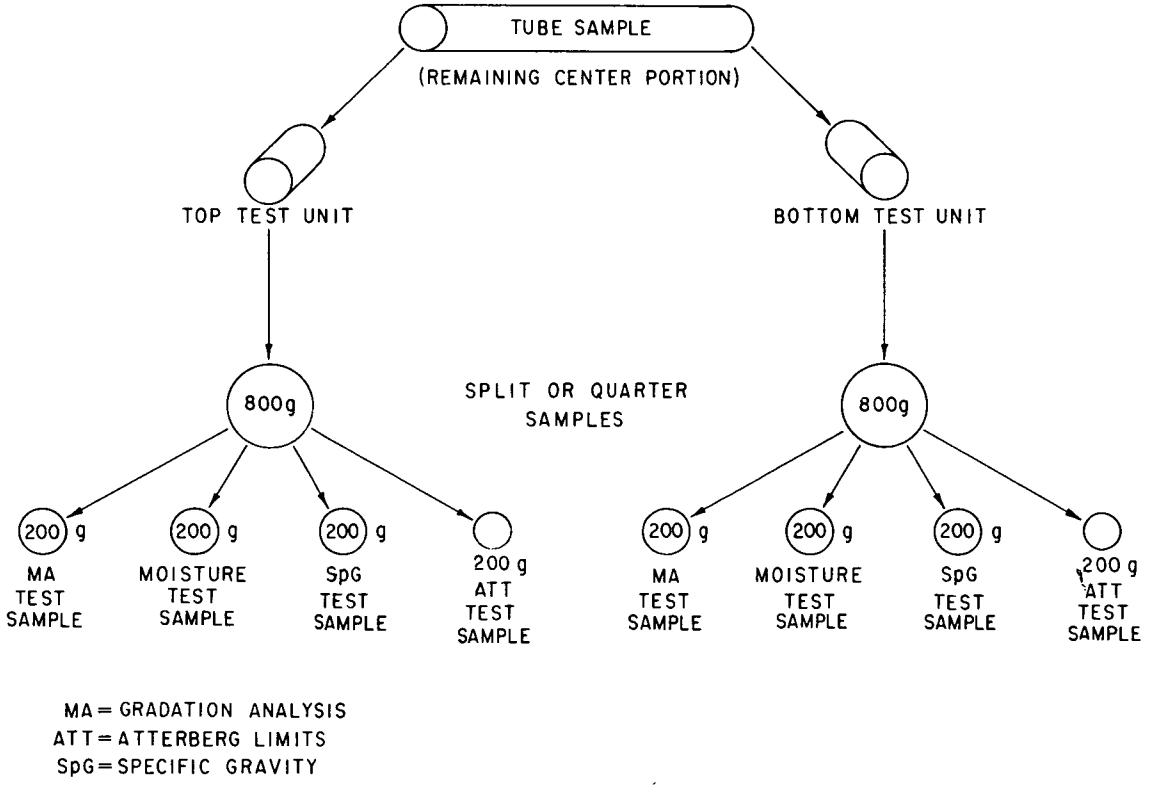

Figure 2. - Schematic of tube processing (dissimilar materials — minus No. 4).

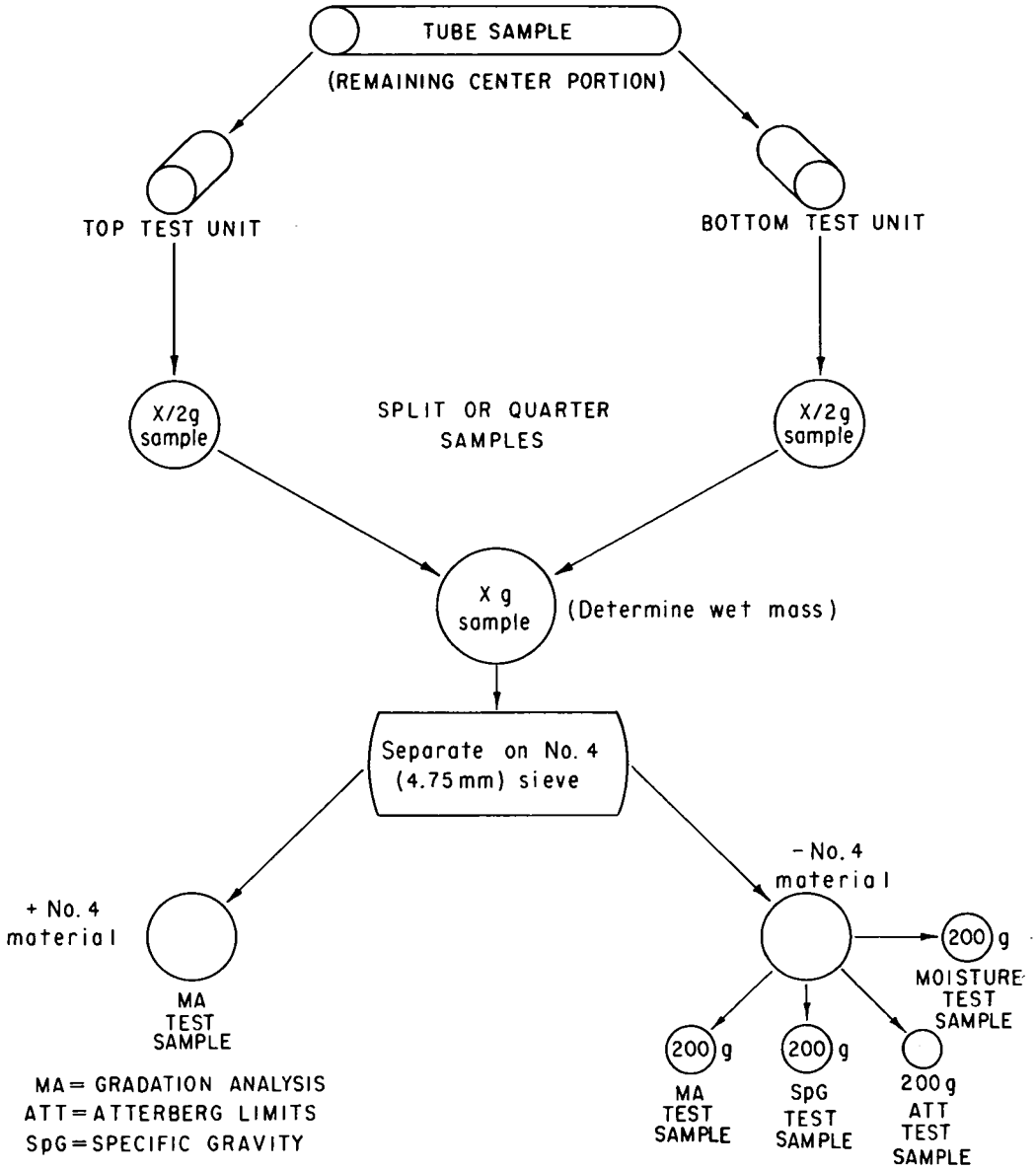

U.S.A. Standard series sieve maximum particle size in	mm	*X gram sample required, minimum*
3/8	9.5	*1 000
3/4	19.0	**1 500
1-1/2	37.5	13 000
Plus 1-1/2	37.5	100 000

* If tube sample contains 20% or more plus No. 4 material, increase sample size as required to obtain a minimum 800-g minus No. 4 sample.
** If tube sample contains 40% or more plus No. 4 material, increase sample size as required to obtain a minimum 800-g minus No. 4 sample.

Figure 3. – Schematic of tube processing (similar material — plus No. 4).

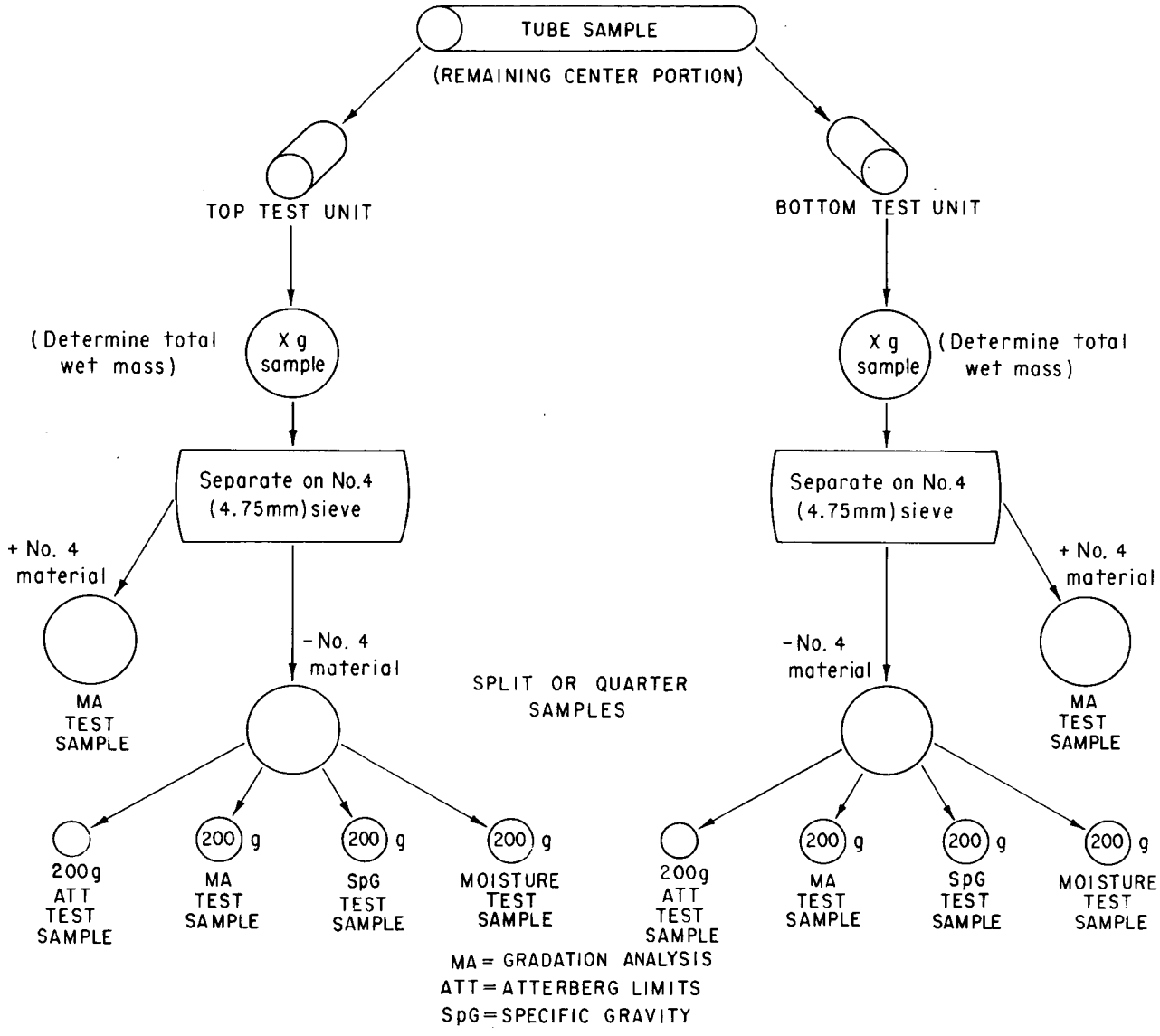

U.S.A. Standard series sieve maximum particle size in	mm	*X gram sample required, minimum*
3/8	9.5	*1 000
3/4	19.0	**1 500
1-1/2	37.5	13 000
Plus 1-1/2	37.5	100 000

* If tube sample contains 20% or more plus No. 4 material, increase sample size as required to obtain a minimum 800-g minus No. 4 sample.
** If tube sample contains 40% or more plus No. 4 material, increase sample size as required to obtain a minimum 800-g minus No. 4 sample.

Figure 4. – Schematic of tube processing (dissimilar materials — plus No. 4).

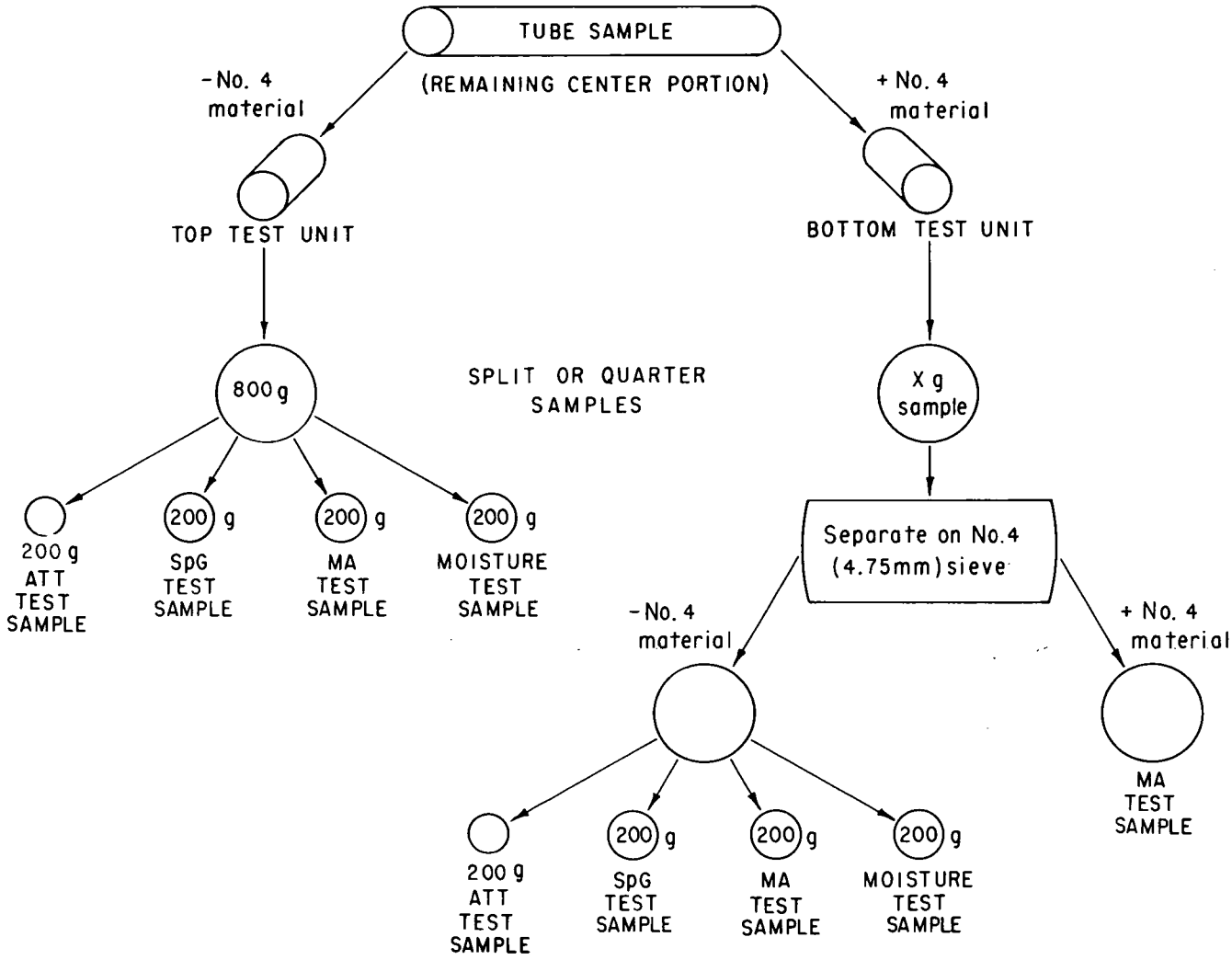

U.S.A. Standard series sieve maximum particle size		*X gram sample required, minimum*
in	mm	
3/8	9.5	*1 000
3/4	19.0	**1 500
1-1/2	37.5	13 000
Plus 1-1/2	37.5	100 000

* If tube sample contains 20% or more plus No. 4 material, increase sample size as required to obtain a minimum 800-g minus No. 4 sample.
** If tube sample contains 40% or more plus No. 4 material, increase sample size as required to obtain a minimum 800-g minus No. 4 sample.

Figure 5. - Schematic of tube processing (dissimilar material — minus No. 4, plus No. 4).

UNITED STATES DEPARTMENT OF THE INTERIOR
BUREAU OF RECLAMATION

USBR 5205-89

PROCEDURE FOR

PREPARING SOIL SAMPLES BY SPLITTING OR QUARTERING

INTRODUCTION

This procedure is under the jurisdiction of the Geotechnical Services Branch, code D-3760, Research and Laboratory Services Division, Denver Office, Denver, Colorado. The procedure is issued under the fixed designation USBR 5205. The number immediately following the designation indicates the year of acceptance or the year of last revision.

1. Scope

1.1 This designation outlines procedures for reducing an amount of soil to a smaller portion which retains the particle size distribution characteristics of the original amount with minimum variation.

1.2 This procedure can be used any time a large amount of soil needs to be reduced to a smaller amount.

1.3 Two methods for reducing the amount of soil are described (1) splitting, and (2) quartering.

1.4 This procedure is limited to soils that can be air-dried without significantly altering their characteristics.

1.5 For clean (less than 5% fines) sands and gravels, the procedures described in ASTM C 702 or USBR 4702 may be used instead of this designation.

1.6 Appendix X1 notes typical amounts of soil needed for frequently performed laboratory tests. Appendix X2 outlines the procedure for preparing composite samples. Appendix X3 describes the procedure for computing a synthetic gradation.

2. Auxiliary Tests

2.1 USBR 5325 may be used as part of—or in combination with—this designation to separate material on the No. 4 sieve, if required.

3. Applicable Documents

3.1 *USBR Procedures*:
USBR 1025 Checking Sieves
USBR 3900 Standard Definitions of Terms and Symbols Relating to Soil Mechanics
USBR 5325 Performing Gradation Analysis of Gravel Size Fraction of Soils
USBR 4702* Reducing Field Samples of Aggregate to Testing Size

3.2 *ASTM Standards*:
E 11 Specification for Wire-Cloth Sieves for Testing Purposes
C 702 Standard Methods for Reducing Field Samples of Aggregate to Testing Size

* *Concrete Manual*, Bureau of Reclamation, part 2, in press.

4. Summary of Method

4.1 After being conditioned (if required) and thoroughly mixed, a soil sample is reduced in size by one of the following methods:

4.1.1 *Splitting.*–The soil is passed through a mechanical splitter which divides the soil into two portions. If one portion is not the required mass, it is reintroduced into the splitter until the required mass is obtained.

4.1.2 *Quartering.*–The soil is formed into a pile, uniformly flattened, and divided into four equal portions (quarters). Two opposite quarters are removed and if the remaining soil is not the required mass, it is remixed and the process repeated until the required mass is obtained.

5. Significance and Use

5.1 To obtain reliable results, laboratory tests must be performed on specimens that represent, within close limits, the characteristics of the soil from which the test specimen was taken.

5.2 The methods in this procedure describe how to reduce an amount of soil to a smaller portion such that the smaller portion is as representative as possible of the original amount of soil.

5.3 Typical amounts of soil to be collected for specific laboratory tests are given in appendix X1, table X1.1.

5.4 If the procedure requires a certain mass of soil and the amount of soil available is not enough to be reduced, the original mass of soil may be used for the test if the mass is equal to or larger than the minimum required mass for the procedure.

6. Terminology

6.1 Definitions are in accordance with USBR 3900.

7. Apparatus

7.1 *Splitting*:

7.1.1 *Mechanical Splitter.*–Mechanical sample splitters are available in various sizes and configurations (see fig. 1). Typically, splitters will be required to process

soil with particles or lumps up to the No. 40 (425 μm), No. 4 (4.75 mm), and 3-inch (75 mm) sieve sizes.

A splitter must have an even number of equal width chutes, with not less than a total of eight chutes for plus No. 4 particles and not less than a total of twelve chutes for minus No. 4 particles. The chutes must discharge alternately to each side of the splitter. The minimum width of the individual chutes must be at least 1.5 times (preferably 2 times) the diameter of the largest particles or lumps in the soil to be split. Some models have adjustable chute widths. The splitter must be equipped with two receptacles; each receptacle to hold one-half of the soil following splitting. The splitter also must be equipped with hopper (feed chute) or a pan with straight smooth edges and flat sides—which has a width equal to or slightly less than the overall width of the assembly of chutes—by which the sample may be fed at a controlled rate to the chutes. The splitter and accessory equipment must be so designed that the sample will flow smoothly through the splitter without restriction or loss of soil.

7.2 *Quartering*:

7.2.1 *Quartering Cloth.*–A piece of canvas, cloth, plastic, or other suitable material about 6 by 8 feet or other convenient size. If the soil to be quartered contains fines or fine sand, the texture of the quartering cloth must be such that all soil particles can be recovered.

7.2.2 Stick, pole, or pipe long enough to extend beyond the quartering cloth and strong enough to lift and separate the soil on the cloth.

7.2.3 Miscellaneous equipment such as shovel, trowel, scoop, brush, dust pan.

7.3 *Conditioning and Sample Preparation*:

7.3.1 Large pans, quartering cloths, or other suitable container to spread soil out for air drying.

7.3.2 Mallet, wood- or rubber-tipped, used to break up soil lumps.

7.3.3 Miscellaneous equipment such as shovels, scoops, trowels, fans, as required.

7.4 *Sieves.*–A U.S.A. Standard series No. 4 (4.75 mm) sieve and other sieves, as required, conforming to the requirements of ASTM E 11.

7.5 Storage containers for soil such as bags, cans, pails, and cartons, as required.

8. Precautions

8.1 *Safety Precautions*:

8.1.1 This designation may involve hazardous materials, operations, and equipment.

8.1.2 Safety shoes are to be worn when handling heavy samples.

8.1.3 Dust masks may be required.

8.2 *Technical Precautions*:

8.2.1 Due to the effects of sampling, handling, processing, and testing on some materials, results of this test may not reflect in-place conditions or the properties of the material caused by processing and placement during construction. Of particular concern are materials such as soft and/or friable decomposed granite, sandstone, shale, limestone, claystone, etc. or soils affected by air and/or oven drying. Such materials must be identified before processing and the person requesting the test should verify whether standard procedures are to be followed, whether modifications are appropriate, or whether the material should be processed and tested at all. Cautionary statements must be made on data forms and in reporting the test data.

8.2.2 Some soils must be tested at a moisture content equal to or greater than the natural moisture content of

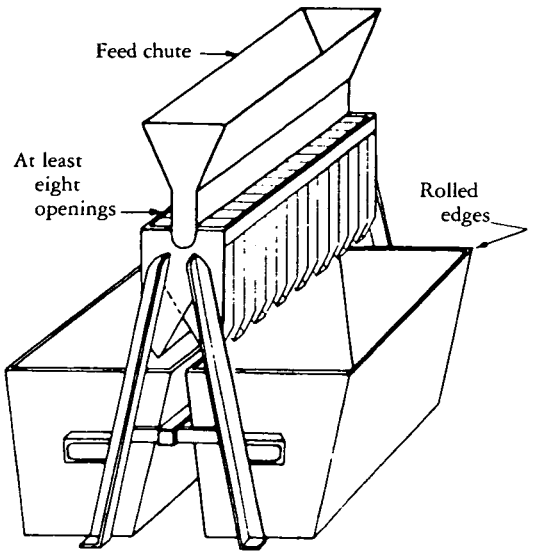

(a) Typical splitter for soils containing plus No. 4 sieve size particles.

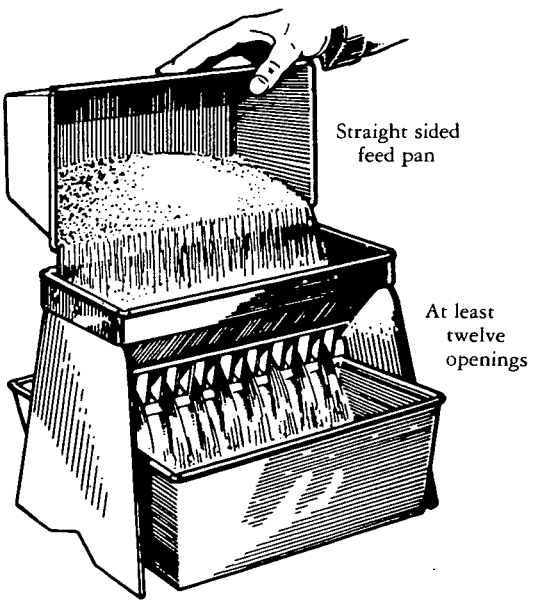

(b) Typical splitter for soils containing minus No. 4 sieve size particles.

Figure 1. – Mechanical splitters [ASTM C 702].

the soil. These soils must be protected from drying during sampling, handling, and processing. Special procedures may be required during reduction of the original samples for laboratory testing.

9. Calibration and Standardization

9.1 Verify that equipment is currently calibrated in accordance with the applicable calibration procedure. If the calibration is not current, perform the calibration according to USBR 1025 before using the equipment for this procedure.

10. Conditioning and Sample Preparation

10.1 Before a soil can be reduced by splitting or quartering, it must be at a moisture content such that the soil is free flowing. If necessary, the soil should be air-dried to the appropriate moisture content as follows:

10.1.1 Spread the soil in large pans, on a quartering cloth or on a hard, clean, level surface to the smallest practical thickness. Break up as many of the soil lumps as possible or practical.

10.1.2 If desired, use fans or other methods of providing air movement across the sample to assist the drying process.

10.1.3 If practical, mix and/or stir the soil to accelerate the drying process.

10.1.4 Break up soil lumps during the drying period. Some soils are much easier to break up while drying than after the soil is completely air-dried.

10.1.5 Do not allow the soil to become so dry that dust is created that would result in a loss of fines.

10.2 Any lumps in the soil must be broken up as much as possible. If a sample splitter is used, lumps must be no larger than 2/3 the width of the individual chutes of the splitter.

11. Reduction of Entire Sample

11.1 Reduce a sample to the required mass using the method of splitting (preferred) described in paragraph 13 or by the method of quartering described in paragraph 14, or a combination of the two methods. The required mass of sample is summarized in appendix X1 for some of the common laboratory soil tests.

11.2 If the original mass of soil is the same or slightly more than the required mass, the original soil may be used in performing the procedure without separating or reducing the soil sample.

12. Reduction of Minus No. 4 (or other size) Fraction

12.1 For some laboratory soil tests, a sample of a given size fraction of the original soil is required, such as minus No. 4 sieve size soil (obtaining a reduced sample of minus No. 4 soil is used here as an example). If the original soil contains particles larger than the No. 4 sieve, the soil must be separated using a No. 4 sieve. The sample is obtained by one of the following methods:

12.1.1 Reduce the original soil sample to a smaller, workable size by splitting (par. 13) or quartering (par. 14) and then separate the smaller portion using a No. 4 sieve or by performing a gradation analysis in accordance with USBR 5325. The mass of the smaller portion to be separated must be such that the required mass of minus No. 4 soil will be obtained.

12.1.2 Separate the entire original soil sample using a No. 4 sieve or by performing a gradation analysis on the soil in accordance with USBR 5325 and then reduce the mass of minus No. 4 sieve size soil obtained by splitting (par. 13) or quartering (par. 14) to the required mass.

13. Procedure Using Mechanical Splitter

13.1 Select an appropriate size splitter based on the maximum particle size or lump present in the soil to be split. The minimum width of the individual chutes must be at least 1.5 times the diameter of the maximum particle size or soil lump.

13.2 If an appropriate splitter is not available the method of quartering must be used.

13.3 If the total mass of soil to be split is greater than the capacity of the splitter, follow the directions of subparagraph 13.10 or 13.11.

13.4 Mix the soil thoroughly; avoid segregation of the particles as much as possible.

13.5 Place the soil in the hopper (feed chute) or feed pan and distribute the soil to uniform thickness from edge to edge so that, when the soil is introduced into the chutes, equal amounts will flow through each chute.

13.6 Open the hopper or empty the feed pan into the hopper at a rate that allows the soil to flow freely through the chutes into the receptacles.

13.7 Take one portion of the split soil and reintroduce it into the splitter. Repeat the process as many times as necessary to obtain slightly more than the required mass. Do not attempt to arrive at the exact mass.

13.8 The portion of the soil collected in the other receptacle may be reduced in the same manner to obtain other samples.

13.9 At any point in the splitting operation, a split portion of the soil may be removed as the required amount of the sample and the remaining soil further reduced to obtain other samples.

13.10 If the total mass of soil to be split is greater than the capacity of the splitter, the original soil sample may be divided into X number of portions with each portion about equal to or less than the capacity of the splitter. Each portion is split down until fraction is obtained with a mass that is about $1/X$ of the mass of the portion. These fractions are recombined and mixed to obtain an amount of soil that can then be reduced to obtain the required sample mass by splitting.

13.11 If the total mass of soil to be split is greater than the capacity of the splitter, the original soil sample may be quartered (in accordance with par. 14) until the

appropriate amount is obtained and then the required sample mass obtained by splitting.

14. Procedure for Quartering

14.1 Use either the procedure described in subparagraph 14.2 or 14.3 or a combination of both.

14.2 Quartering done on a hard, clean, level surface (see fig. 2):

14.2.1 Place the soil on a hard, clean, level surface where there will be neither loss of soil nor the accidental addition of foreign material. Mix the soil thoroughly by turning the entire sample over at least three times.

14.2.2 Shovel the soil into a conical pile by depositing each shovel full on top of the proceeding one.

14.2.3 Carefully flatten the conical pile to a uniform thickness and diameter by pressing down the apex with a shovel.

14.2.4 Divide the flattened soil into four equal quarters with a shovel or trowel and completely remove two diagonally opposite quarters, and brush the cleared spaces clean.

14.2.5 If the remaining soil is more than twice the desired quantity, successively mix and quarter the remaining soil until the sample is reduced to the appropriate amount.

14.3 Quartering using a quartering cloth (see fig. 3):

14.3.1 Place the soil on quartering cloth. Mix the soil thoroughly using a shovel, or by alternately lifting each corner of the cloth and pulling the corner over the pile toward the diagonally opposite corner causing the soil to be rolled.

14.3.2 Carefully flatten the conical pile to a uniform thickness and diameter by pressing down the apex with a shovel.

14.3.3 Quarter the pile by one of the following methods. The first method (subpar. 14.3.3.1) is usually more convenient for soils that are predominantly fine-grained while the second method (subpar. 14.3.3.2) is better suited for soils that are predominantly coarse-grained. The second method is more applicable when the surface beneath the cloth is uneven.

14.3.3.1 Divide the flattened mass into four equal quarters with a shovel or trowel and completely remove two diagonally opposite quarters, and brush the cleared spaces clean.

14.3.3.2 Insert a stick or pipe beneath the cloth under the center of the pile. Slightly lift both ends of the stick to divide the sample into two equal parts. Remove the stick leaving the fold of the cloth between the divided portions. Insert the stick under the center of the pile at right angles to the first division and again lift both ends of the stick, dividing the sample into four equal parts. Remove two diagonally opposite quarters while being careful to clean the fines from the cloth.

14.3.4 If the remaining soil is more than twice the desired amount, successively mix and quarter the remaining soil until the sample is reduced to the appropriate amount.

14.4 The portion of the soil not used as the required amount of soil may be reduced in the same manner to obtain other samples.

14.5 At any point in the quartering process, two opposite quarters of the soil may be removed as the required amount of the sample and the remaining soil further reduced to obtain other samples.

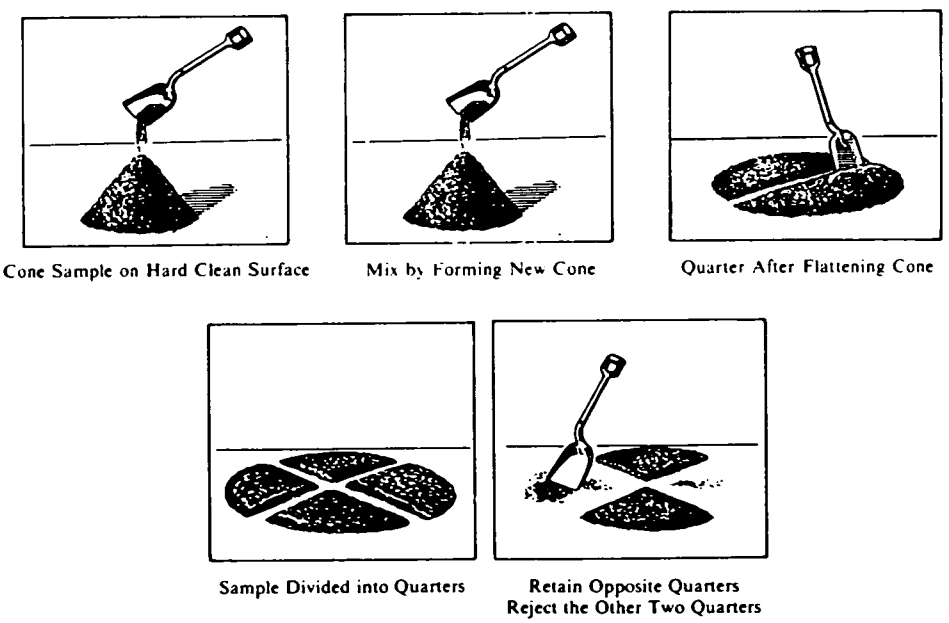

Figure 2. – Quartering done on a hard, clean, level surface [ASTM C 702].

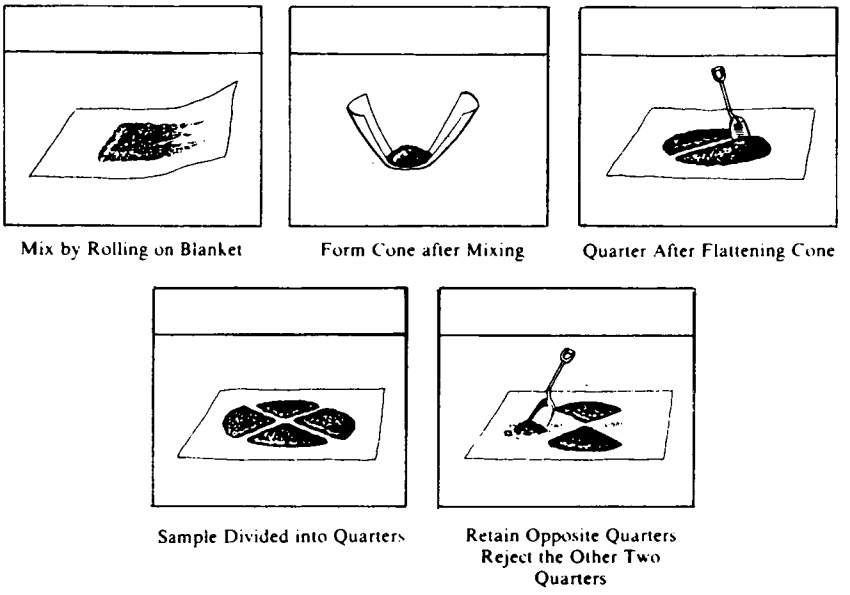

Figure 3. – Quartering using a quartering cloth [ASTM C 702].

APPENDIX

X1. SUMMARY OF QUANTITY OF SOIL NEEDED FOR LABORATORY TESTS

X1.1 Sample Size

X1.1.1 The tables in this appendix summarize the mass of soil required for laboratory testing. Three values of mass are:

- Practical *Field Sample* Size
- Recommended *Test Sample* Size
- Required Minimum *Test Specimen* Size

X1.2 Field Sample

X1.2.1 The *field sample* is the soil collected at the site for purposes of identification or to obtain samples for testing. The field sample must be obtained in such a manner as to best reflect the properties of the soil it represents. *This is the most important step in obtaining reliable test results.* Accordingly, as much material should be obtained as practical. The field sample can then be split or quartered to obtain the test sample (see subpar. X1.7).

X1.3 Test Sample

X1.3.1 The *test sample* is the soil needed at the beginning of a given procedure. It may or may not be the same mass as the test specimen—depending on how the test specimen must be prepared for testing and the moisture content requirements of the test specimen.

X1.4 Test Specimen

X1.4.1 The *test specimen* is the soil required to perform the test. The minimum mass is stated and this usually depends on the maximum particle present in the soil being tested. This may correspond either to the original field sample or to a size fraction of the original sample.

X1.5 Tables

X1.5.1 Table X1.1 notes the *requirements for individual soil tests* typically performed in a field laboratory.

X1.5.2 Table X1.2 indicates the requirements for certain common *combinations of soil tests.*

X1.5.3 Table X1.3 shows the requirements for *soil tests performed at the Denver Office* in the Bureau's geotechnical laboratory.

X1.5.4 These tables are only for convenient reference and not all soil tests are described. The requirements for each soil procedure are described in the specific designation. The values shown are for typical conditions for most soils. There are particular circumstances and unusual soils that may require special consideration.

X1.6 Notes and Development of Tables

X1.6.1 The *test specimen* is tested in one of three moisture states; as received (or field moisture), air-dried, or oven dried. When the *field sample* is collected, the soil is normally at its in-place moisture content. If the soil is tested in an air-dried or oven-dried state, the mass of water in the field sample must be considered in order to provide sufficient soil for testing.

X1.6.2 Where possible, the *field sample* should be about four times larger than the *test sample*—so it is split (or quartered) twice. For practical reasons or for test requirements, the field sample may range from one to eight times larger than the test sample. At the minimum, the field sample must be large enough to provide the minimum mass of *test specimen* required. When possible, the maximum mass of the field sample was limited to 200 lbm for practical concerns of handling, shipping, and storing.

X1.6.3 Field samples of disturbed soils are usually collected in sacks. The mass of the sack and soil should be limited to about 50 lbm for safe handling. Therefore, the field sample mass shown in the tables may have been rounded to an increment of 50 lbm.

X1.6.4 In some cases, test specimen and test sample are measured and tested in gram or kilogram units. For these tests the field sample is given in pound mass for practical reasons.

X1.7 Field Sample — Shipping and Storing

X1.7.1 The large amount of field sample to be collected at the site aids in obtaining a sample that best represents the in-place material. For practical purposes of shipping and storage, the field sample may be reduced at the site to the test sample size by splitting or quartering in accordance with this designation.

Table X1.1 – Requirements for individual soil tests.

USBR designation No.	Nominal description of test	Maximum particle size[1]	Practical field sample	Recommended test sample	Required minimum test specimen	Comments
5330 or 5335	Gradation: minus No. 4	No. 4 fraction	5 lbm	500 g	100 g oven dried	
5325	Gradation: gravel sizes	3/8 in	5 lbm*	For air dried specimens, same as test specimen mass. If not air dried, need test specimen mass plus amount equivalent to mass of moisture content.	200 g* air dried	*10 lbm recommended for large mechanical sieve shakers
		3/4 in	15 lbm		1,100 g* air dried	
		1-1/2 in	100 lbm		20 lbm air dried	
		3 in	200 lbm		150 lbm air dried	
5320 Method A	Specific gravity minus No. 4	No. 4 fraction	5 lbm	500 g	100 g oven dried	
5320 Methods B or C	Specific gravity and absorption plus No. 4	3/8 in	20 lbm**	Same as test specimen	2 kg** air dried	**Required mass of plus No. 4 particles
		3/4 in	30 lbm**		3 kg** air dried	
		1-1/2 in	50 lbm**		5 kg** air dried	
		3 in	200 lbm**		18 kg** air dried	
Atterberg limits (LL, PL, and SL)		No. 4 fraction	5 lbm*	500 g* air dried		*or more, as required, to have 120 g of air-dried soil (150 g if shrinkage limit included)
5350	LL — 1 point				100 g air-dried	
5355	LL — 3 point				100 g air-dried	
5360	Plastic limit				20 g air-dried	Need two 8-g wet mass test specimens
5365	Shrinkage limit				30 g air-dried	
5525 and/or 5530	Minimum and/or maximum index unit weight (WET OR DRY MAXIMUM)	No. 4, 3/8- or 3/4-in	100 lbm	25 lbm	25 lbm	
		1-1/2- or 3-in	150 lbm	75 lbm	75 lbm	
	(WET AND DRY MAXIMUM)	No. 4, 3/8- or 3/4-in	100 lbm	50 lbm	50 lbm	
		1-1/2- or 3-in	200 lbm	150 lbm	150 lbm	
5500	Laboratory compaction: minus No. 4	No. 4 fraction	200 lbm	50 lbm air-dried	50 lbm air-dried	
5515	Laboratory compaction: gravelly soils (one specimen)	3-in	350 lbm*	350 lbm*	225 lbm	*or more as needed to have 50 lbm of minus No. 4 and about 50 lbm of plus No. 4
	3 specimens		900 lbm	900 lbm	900 lbm	
5600	Permeability minus No. 4	No. 4 fraction	50 lbm	15 lbm	15 lbm	
	Permeability gravelly soils	3-in	350 lbm*	350 lbm*	225 lbm	

[1] Maximum particle size present in original sample.
No. 4 fraction means either maximum particle in original sample was No. 4 or smaller or a representative portion of the minus No. 4 fraction of the original sample is required.
SI standard: No. 4 sieve — 4.75 mm, 3/8 inch — 9.5 mm, 3/4 inch — 19.0 mm, 1-1/2 inch — 37.5 mm, 3 inch — 75 mm, and 5 inch — 125 mm.

Table X1.2 – Combinations of soil tests.

Test combinations[1]	Maximum particle size[2]	Minimum sample required, lbm
Laboratory classification (gradation, Atterberg limits) USBR 5000	No. 4	50
	3/8-in	50
	3/4-in	50
	1-1/2-in	100
	3-in	200
Physical properties: Cohesive soil (gradation, Atterberg limits, specific gravity, laboratory compaction)	No. 4	50
	3/8-in	100*
	3/4-in	100*
	1-1/2-in	100*
	3-in	200*
		*or more as needed to have 50 lbm of minus No. 4
Physical properties: Cohesionless soil (gradation, Atterberg limits, specific gravity, maximum and minimum index unit weight)	No. 4	100
	3/8-in	100
	3/4-in	200
	1-1/2-in	200
	3-in	200
Soil-cement (for 3 cement contents)	1-1/2-in	2000

[1] Assumes field sample will be used for more than one test, if sample is divided to provide separate test samples add up values in table X1.1.
[2] Maximum particle size present in original sample.

Table X1.3 – Soil tests performed at the Denver Office

These tests are usually performed in conjunction with physical properties and compaction tests and size of field sample must be adjusted accordingly.

For placement of compacted specimens from disturbed samples.

USBR designation No.	Nominal description of test	Maximum particle size[1]	Practical field sample	Recommended test sample	Required minimum test specimen	Comments
5400 5405 5410	Dispersive clay testing (crumb, pinhole, double hydrometer	No. 4 fraction	5 lbm	500 g	500 g	
5700 or	One-dimensional consolidation or	No. 4 fraction	15 lbm	3 lbm	About 1.5 lbm	
5705 or	Expansion or					
5715	Uplift					
5740	Triaxial K_o (usually performed in conjunction with other triaxial tests)	No. 4 fraction	20 lbm	4 lbm	About 2 lbm	For one 2-in dia. specimen
		3/4-in	100 lbm	50 lbm	45 lbm	For one 6-in dia. specimen
		1-1/2-in	200 lbm	170 lbm	150 lbm	For one 9-in dia. specimen
Triaxial tests 5745 or	UU or	No. 4	65 lbm	16 lbm	8 lbm	For four 2-in dia. specimens
5740 or	CU or	3/4-in	200 lbm	200 lbm	180 lbm	For four 6-in dia. specimens
5755	CD	1-1/2-in	700 lbm	700 lbm	600 lbm	For four 9-in dia. specimens

[1] Maximum particle size present in original sample.

No. 4 fraction means either maximum particle in original sample was No. 4 or smaller or a representative portion of the minus No. 4 fraction of the original sample is required.

SI standard: No. 4 sieve — 4.75 mm, 3/8 in — 9.5 mm, 3/4 in — 19.0 mm, 1-1/2 in — 37.5 mm, 3 in — 75 mm, and 5 in — 125 mm.

X2. PREPARATION OF COMPOSITE SAMPLES

X2.1 Scope

X2.1.1 This appendix outlines the procedure for preparing composite samples for laboratory use.

X2.2 Significance and Use

X2.2.1 Individual test pit samples from different strata may be composited to represent any desired depth for study. Samples may be composited by proportioning individual samples on the basis of percentage passing the No. 4 (4.75 mm) sieve or on the basis of some other maximum size and stratum thickness. Composite samples also may be prepared on given desired precentage proportions specified other than stratum thickness or maximum size.

X2.3 Procedure

X2.3.1 All data are to be recorded on the "Preparation of Composite Samples" form as shown on figure X2.1.

X2.3.2 Record the sample number and soil classification of each sample used for the composite sample.

X2.3.3 Record the thickness of strata each sample represents.

X2.3.4 Locate from the gradation curve or the gradation analysis form (fig. X3.2) the percent passing the No. 4 (4.75-mm) sieve or the percent passing the maximum particle size to be considered for each sample and record the appropriate values.

X2.3.5 Calculate the effective thickness of each sample.

X2.3.6 Calculate the total effective thickness of the composite sample.

X2.3.7 Determine and record the desired total mass of the composite sample.

X2.3.8 Calculate the mass per unit thickness for each sample.

X2.3.9 Calculate the required mass of each sample to obtain the desired mass for the composite sample.

X2.4 Calculations

X2.4.1 Calculate the effective thickness of each sample.

$$(5) = (3) \times \frac{(4)}{100} \qquad \text{(X2-1)}$$

where:

(5) = effective thickness, ft or m
(3) = thickness of strata, ft or m
(4) = percent passing the No. 4 (4.75-mm) sieve or percent passing the maximum size considered
100 = convert from percent to decimal

X.2.4.2 Calculate the total effective thickness of the composite sample.

$$\text{Total effective thickness} = (5)_1 + (5)_2 + \ldots (5)_n \qquad \text{(X2-2)}$$

where:

$(5)_1, (5)_2, \ldots (5)_n$ = effective thickness calculated for each sample *n*, ft or m

X2.4.3 Calculate the mass per unit thickness of each sample.

$$(6) = \frac{(A)}{(B)} \qquad \text{(X2-3)}$$

where:

(6) = mass per unit thickness, lbm/ft or kg/m
(A) = total desired mass of composite sample, lbm or kg
(B) = total effective thickness of composite sample, ft or m

X2.4.4 Calculate the required mass of each sample.

$$(7) = (5) \times (6) \qquad \text{(X2-4)}$$

where:

(7) = mass required, lbm or kg
(5) = effective thickness (each sample), ft or m
(6) = mass per unit thickness, lbm/ft or kg/m

X2.5 Report

X2.5.1 The report is to consist of a completed and checked "Preparation of Composite Samples" form (fig. X2.1).

X2.5.2 All calculations are to show a checkmark.

7-2348 (5-86)
Bureau of Reclamation

PREPARATION OF COMPOSITE SAMPLES

Designation USBR 5205-89

PROJECT Example FEATURE Example LOCATION A

DEPTH/ELEV. 0-6 [X] ft [ ] m SAMPLE NO. IIJ-X90 SPECIMEN NO. 1

COMPUTED BY _____ DATE _____ CHECKED BY _____ DATE _____

LABORATORY MIX

SAMPLE NO. (1)	CLASSIFICATION (2)	THICKNESS OF STRATA (ft) (3) m	% PASSING NO. 4 SIEVE (4)	EFFECTIVE THICKNESS (ft) (5) m	MASS PER (ft) m (lbm) (6) Kg	MASS REQUIRED (lbm) (7) Kg
IIJ-23	ML	5	94.4	4.72	11.49	54.23
IIJ-24	GM	1	50.1	0.50	11.49	5.75
		6		5.22		59.98
Col.	(4)~From graduation curve or gradation analysis form					
Col.	(5)~Col.(3)×Col.(4)÷100					
Col.	(6)~Total mass of composite sample desired* ÷ Total of Col. (5)					
Col.	(7)~Col.(5)×Col.(6)					
	* Approximately 60 lbm desired in this case					

FIELD MIX

MAXIMUM SIZE CONSIDERED 1½ INCHES

SAMPLE NO.	CLASSIFICATION	THICKNESS OF STRATA (ft) m	% PASSING MAX. SIZE CONSIDERED	EFFECTIVE THICKNESS (ft) m	MASS PER (ft) m (lbm) Kg	MASS REQUIRED (lbm) Kg
IIJ-23	ML	5	96.4	4.82	13.61	65.60
IIJ-24	GM	1	68.8	0.69	13.61	9.39
IIJ-X91	SM	6		5.51		74.99

Figure X2.1. – Preparation of composite samples — example.

X3. SYNTHETIC GRADATION ANALYSIS

X3.1 Scope

X3.1.1 This appendix outlines the procedure for performing synthetic gradation computations.

X3.2 Significance and Use

X3.2.1 Synthetic gradation analysis is a term used to define the method for computing the change in gradation of a soil caused by adding or removing certain fractions, or the gradation of material when two or more soils are combined whose gradations have been previously determined. This analysis is often used to study different combinations of materials prior to making laboratory composite samples or to study the effects of removing or adding various particle sizes.

X3.3 Analysis

X3.3.1 All data are to be recorded on the "Synthetic Gradation Analysis Computations" form as shown on figure X3.1.

X3.3.2 Combining two or more gradation analyses:

X3.3.2.1 Record the sample number of each sample to be combined.

X3.3.2.2 Record the thickness of strata each sample represents.

X3.3.2.3 Determine the percent of total strata each sample thickness represents and record the values under the column *Strata, % of total.* These percentages also may be some other desired proportion rather than by thickness of strata.

X3.3.2.4 Using the original gradation curves or sample preparation forms (fig. X3.2), determine the percentage passing each sieve size for each of the soils to be combined. Record the values in the lower right corner of the divided square provided for each sieve size as shown on figure X3.2

X3.3.2.5 Multiply the individual percentages recorded in subparagraph X3.3.2.4 by the percentage (expressed as a decimal) each sample is *% of the total* and record the product in the upper left corner of the corresponding square.

X3.3.2.6 Repeat subparagraph X3.3.2.5 for each sample to be combined.

X3.3.2.7 Add the figures in the upper left corner in any one vertical column and record the sum in the lower right corner of the row designating the combined sample number. (On example computation form, fig. X3.1, the combined sample is designated as 3X.) This sum is the percent passing the size indicated by the column heading for combined analysis.

X3.3.3 Gradation analysis after removal of a limiting maximum size:

X3.3.3.1 Record the values obtained in subparagraph X3.3.2.7 in the upper left corner of the squares (fig. X3.1).

X3.3.3.2 Enter the figure "100" in the lower right corner of the square of the smallest particle size considered as removed.

X3.3.3.3 Determine the multiplying factor as shown on figure X3.1.

X3.3.3.4 Multiply each of the individual percentages recorded in the upper left corner by the factor and record the product in the lower right corner.

X3.3.3.5 The figures in the lower right corner represent the percent passing each size indicated by the column heading, assuming all particles larger than a given size [No. 4 (4.75-mm) sieve in the example] have been removed.

X3.4 Report

X3.4.1 The report is to consist of a completed and checked "Synthetic Gradation Analysis Computations" form (fig. X3.1).

X3.4.2 All calculations are to show a checkmark.

7-1384A (12-86)
Bureau of Reclamation

SYNTHETIC GRADATION ANALYSIS COMPUTATIONS

Designation USBR 5205-89

PROJECT Example FEATURE Example LOCATION Example DEPTH/ELEV. 0-6 [X] ft [ ] m

SAMPLE NO. 3X SPECIMEN NO. 1 COMPUTED BY _____ DATE _____ CHECKED BY _____ DATE _____

SAMPLE NO.	STRATA		PARTICLE SIZE (mm)					SIEVE SIZE							SCREEN SIZE (mm)				
	THICK. (ft) m	% OF TOTAL	0.005	0.009	0.019	0.037	0.05	200	100	50	30	16	8	4	9.5	19	37.5	75	125
1	5	83.3	12.6 / 15.1	16.5 / 19.8	20.4 / 24.5	30.7 / 36.8	- / -	45.0 / 54.0	60.4 / 72.5	73.5 / 88.2	76.9 / 92.3	78.0 / 93.6	78.3 / 94.0	78.6 / 94.4	79.1 / 94.9	79.8 / 95.8	80.3 / 96.4	83.3 / 100	
2	1	16.7	0.7 / 4.0	0.8 / 4.9	1.2 / 7.0	1.7 / 10.2	- / -	2.7 / 16.3	3.8 / 22.8	5.1 / 30.4	6.1 / 36.5	7.0 / 42.0	7.7 / 46.3	8.4 / 50.1	9.5 / 57.0	10.9 / 65.2	11.5 / 68.8	16.7 / 100	
3X	6	100	/ 13.3	/ 17.3	/ 21.6	/ 32.4	/ -	/ 47.7	/ 64.2	/ 78.6	/ 83.0	/ 85.0	/ 86.0	/ 87.0	/ 88.6	/ 90.7	/ 91.8	/ 100	
3X		1.149*	13.3 / 15.3	17.3 / 19.9	21.6 / 24.8	32.4 / 37.2	- / -	47.7 / 54.8	64.2 / 73.8	78.6 / 90.3	83.0 / 95.4	85.0 / 97.7	86.0 / 98.8	87.0 / 100	88.6	90.7	91.8	100	

Percent above diagonal is proportional percent of this sample of total combined sample.
Percent below diagonal is percent of this sample passing.

*Factor = $\frac{100}{\%\ \text{Passing No.4}} = \frac{100}{87} = 1.149$

Figure X3.1. – Synthetic gradation analysis computations — example.

7-1451 (9-86) Bureau of Reclamation	GRADATION ANALYSIS	Designation USBR 5325- 89 Designation USBR 5330- 89 Designation USBR 5335-__
SAMPLE NO. 1	PROJECT Example	FEATURE Example
AREA B	EXC. NO. 1	DEPTH 0 - 10 ft.

GRADATION OF GRAVEL SIZES

TESTED AND COMPUTED BY	DATE	% MOISTURE CONTENT OF + NO. 4	WET MASS OF TOTAL SPECIMEN
CHECKED BY	DATE	% MOISTURE CONTENT OF - NO. 4	TOTAL DRY MASS OF SPECIMEN

SIEVE SIZE		3" (75 mm)	1-1/2" (37.5 mm)	3/4" (19.0 mm)	3/8" (9.5 mm)	NO. 4 (4.75 mm)	PAN
MASS OF CONTAINER AND RETAINED MATERIAL							
MASS OF CONTAINER							
WET MASS RETAINED							
DRY MASS RETAINED							
DRY MASS PASSING							[X] lbm [ ] kg [ ] g
% OF TOTAL PASSING		100.0	96.4	95.8	94.9	94.4	

GRADATION OF SAND SIZES

DRY MASS OF SPECIMEN 50.0 g

FACTOR = $\frac{\text{\% TOTAL PASSING NO. 4}}{\text{DRY MASS OF SPECIMEN}} = \frac{94.4}{50.0} = 1.888$

DISH NO. 18

DRY MASS OF SPECIMEN (SIEVED) 21.4 g

SIEVING TIME 15 min.

DATE

SIEVE NO.	MASS RETAINED (g)	MASS PASSING (g)	FACTOR X MASS PASSING = % OF TOTAL PASSING	% OF TOTAL PASSING	PARTICLE DIAMETER	REMARKS
8	0.2	49.8		94.0	2.36 mm	
16	0.4	49.6		93.6	1.18 mm	
30	1.1	48.9		92.3	600 µm	
50	3.3	46.7		88.2	300 µm	
100	11.6	38.4		72.5	150 µm	
200	21.4	28.6		54.0	75 µm	
PAN	trace					
TOTAL	21.4					

TESTED AND COMPUTED BY | DATE | CHECKED BY | DATE

HYDROMETER ANALYSIS

HYDROMETER NO. | DISPERSING AGENT

STARTING TIME | DATE | AMOUNT mL

TIME	TEMP °C	HYD READ	HYD CORR	CORR READ	FACTOR X CORRECT READ = % OF TOTAL PASSING	% OF TOTAL PASSING	PARTICLE DIAMETER	REMARKS
1 min	27.0	22.5	3.0	19.5		36.8	37 µm	
4 min	27.0	16.0	3.0	13.0		24.5	19 µm	
19 min	27.0	13.5	3.0	10.5		19.8	9 µm	
60 min	27.0	11.0	3.0	8.0		15.1	5 µm	AUXILIARY TESTS: USBR 5205- 89 USBR 5300- 89
7 h 15 min*							2 µm	
25 h 45 min*							1 µm	

TESTED AND COMPUTED BY | DATE | CHECKED BY | DATE

*Not required for standard test.

Figure X3.2. - Gradation analysis — example.

UNITED STATES DEPARTMENT OF THE INTERIOR
BUREAU OF RECLAMATION

USBR 5210-89

PROCEDURE FOR

PREPARING COMPACTED SOIL SPECIMENS FOR LABORATORY USE

INTRODUCTION

This procedure is under the jurisdiction of the Geotechnical Services Branch, code D-3760, Research and Laboratory Services Division, Denver Office, Denver, Colorado. The procedure is issued under the fixed designation USBR 5210. The number immediately following the designation indicates the year of acceptance or the year of last revision.

1. Scope

1.1 This designation outlines procedures for preparing compacted soil specimens for laboratory use. It covers techniques and equipment for compacting both cohesionless and cohesive soils.

1.2 The procedure is appropriate for preparing compacted soil specimens on which soil properties—including permeability, compressibility, and static and dynamic shear strength—are determined.

1.3 Five methods of specimen preparation are outlined which involve use of two compaction procedures and three types of compaction molds.

- One method presents techniques for compacting only cohesive soil.
- Three methods present techniques for compacting only cohesionless soil.
- One method presents techniques for compacting either cohesive or cohesionless soil.

The following table presents a summary of compaction techniques and compaction mold systems available and identifies whether cohesive and/or cohesionless soils can be compacted.

	Compaction mold system		
Compaction technique	*Split mold (no membrane)*	*Rigid mold (no membrane)*	*Stand-up vacuum (membrane)*
	Method A	*Method B*	*Method C*
Tamping (uniform lift heights)	Cohesive soil	Cohesive and cohesionless soil	Cohesionless soil
		Method D	*Method E*
Pouring with vibration	- - -	Cohesionless soil	Cohesionless soil

2. Auxiliary Tests

2.1 Test samples must be prepared in accordance with USBR 5205. Other appropriate tests to be performed prior to performing this procedure are:

Test	*USBR*
Moisture Content	5300
Specific Gravity	5320
Gradation Analysis	5325 and/or 5330
Laboratory Compaction	5500
Laboratory Compaction — Gravel	5515
Minimum Index Unit Weight	5525
Maximum Index Unit Weight	5530

3. Applicable Documents

3.1 *USBR Procedures*:

USBR 1009 Calibrating Compaction Molds
USBR 1012 Calibrating Balances or Scales
USBR 1020 Calibrating Ovens
USBR 3900 Standard Definitions of Terms and Symbols Relating to Soil Mechanics
USBR 5205 Preparing Soil Samples By Splitting or Quartering
USBR 5300 Determining Moisture Content of Soil and Rock by the Oven Method
USBR 5320 Determining Specific Gravity of Soils
USBR 5325 Performing Gradation Analysis of Gravel Size Fraction of Soils
USBR 5330 Performing Gradation Analysis of Fines and Sand Size Fraction of Soils, Including Hydrometer Analysis
USBR 5500 Performing Laboratory Compaction of Soils — 5.5-lbm Rammer and 18 -in Drop
USBR 5515 Performing Laboratory Compaction of Soils Containing Gravel
USBR 5525 Determining the Minimum Index Unit Weight of Cohesionless Soils
USBR 5530 Determining the Maximum Index Unit Weight of Cohesionless Soils

4. Summary of Method

4.1 *Method A — Preparing Compacted Cylindrical Specimens of Cohesive Soil Using Split Molds and Tamping Compaction*:

4.1.1 Compacted specimens are prepared using tamping compaction applied to equal masses of soil to produce compacted lifts of equal thickness in a split mold

(no membrane). The material must have enough structure or cohesion to stand unsupported after the mold is removed. The soil may contain plus No. 4 material (gravel).

4.1.2 Cohesive soil is compacted to a predetermined dry unit weight at a specified moisture content. The soil is placed and compacted in layers (from 3 to 10) using tamping compaction.

4.1.3 After the specimen is compacted, the mold is removed and the specimen volume is determined by direct measurement or by the mass-in-air/mass-in-water method. Specimen initial conditions including dry unit weight, void ratio, and degree of saturation are calculated.

4.2 *Method B — Preparing Compacted Specimens in Rigid Mold*:

4.2.1 Compacted specimens are prepared using tamping compaction applied to equal masses of soil to produce compacted lifts of equal thickness in a rigid mold that is an integral part of the test apparatus.

NOTE 1.–Reference [1][1] describes an undercompaction technique used to prepare specimens of cohesionless soil. Tamping compaction is applied to equal masses of soil to produce compacted lifts of unequal thickness. This is done in an attempt to compensate for the compaction which occurs in previously placed layers to produce a more uniform specimen.

4.2.2 A cohesive or cohesionless soil is compacted in layers (from 1 to 3) to a predetermined dry unit weight at a specified moisture content.

4.2.3 After the specimen is compacted, initial placement conditions are determined using either the mass placed in the specimen as it was prepared or the actual compacted specimen mass, along with the calibrated volume of the rigid compaction mold.

4.3 *Method C — Preparing Compacted Cylindrical Specimens of Cohesionless Soil Using a Stand-Up Vacuum Mold*:

4.3.1 Compacted specimens are prepared using tamping compaction applied to equal masses of soil to produce compacted lifts of equal thickness in a stand-up vacuum compaction mold on the test apparatus. A specimen membrane is affixed to the interior perimeter of the mold by vacuum. The soil may contain plus No. 4 material.

4.3.2 A cohesionless soil is compacted in layers (from 3 to 10) to a predetermined dry unit weight at a specified moisture content.

4.3.3 After the specimen is compacted, end plates are affixed to the specimen and the membrane is secured to the end plates. A vacuum is applied to the specimen through the end plates so the specimen will stand alone when the mold is removed. After the mold is removed from the compacted specimen, the volume of the specimen is determined by direct measurement and the test system is assembled.

4.4 *Method D — Preparing Compacted Specimens of Cohesionless Soil Using Rigid Molds and Compaction by Pouring and Vibration*:

4.4.1 Compacted specimens are prepared using a pouring and sifting technique with vibration in which cohesionless soil is compacted in a rigid mold that is an integral part of the test apparatus. References [2, 3, and 4] discuss pouring placement techniques (air pluviation).

4.4.2 Dry, cohesionless, minus No. 4 material is placed to a predetermined dry unit weight using a combination of pouring and sifting the material while simultaneously striking the mold. The rate at which the material is sifted and the frequency of striking—and/or magnitude of striking force—required to achieve a particular dry unit weight is determined experimentally.

4.4.3 This compaction procedure can produce specimens with placement dry unit weights ranging from a dry unit weight corresponding to the minimum index unit weight of the material to dry unit weights approaching the maximum index unit weight of the material.

4.4.4 After the specimen is compacted, placement conditions are determined as described in subparagraph 4.2.3.

4.5 *Method E — Preparing Compacted Cylindrical Specimens of Cohesionless Soil Using a Stand-Up Vacuum Mold and Compaction by Pouring and Vibrations*:

4.5.1 Compacted specimens are prepared using a pouring and sifting technique with vibration in which cohesionless soil is compacted in a stand-up vacuum compaction mold that rests on an end plate affixed to the test system. A specimen membrane is affixed to the interior perimeter of the mold by vacuum. References [2, 3, and 4] describe various pouring placement techniques (air pluviation).

4.5.2 Dry, cohesionless, minus No. 4 material is placed to a predetermined dry unit weight using a combination of pouring and sifting the material while simultaneously striking the mold. The rate at which the material is sifted and the frequency of striking—and/or magnitude of the striking force—required to achieve a particular dry unit weight is determined experimentally.

4.5.3 This compaction procedure can produce specimens with placement dry unit weights ranging from a dry unit weight corresponding to the minimum index unit weight of the material to dry unit weights approaching the maximum index unit weight of the material.

4.5.4 After the specimen is compacted, the top end plate is affixed to the top of the specimen, and the membrane sealed with O-rings. A vacuum is applied to the specimen through the end plates, and the stand-up vacuum mold removed from the specimen. Initial placement conditions are determined as described in subparagraph 4.2.3.

5. Significance and Use

5.1 *General*:

5.1.1 Proper preparation of compacted specimens for laboratory use is important for determining representative values of permeability, compressibility, and shear strength.

5.1.2 Compacted specimens having incorrect placement dry unit weight, moisture content, or particle size

[1] Number in brackets refers to the reference.

distribution will not accurately represent the soil condition desired, and may lead to erroneous conclusions based on results of laboratory tests performed on the specimens.

5.2 *Methods D and E*:

5.2.1 Preparation of uniform specimens of cohesionless materials at various dry unit weights ranging from the minimum to the maximum relative density of the soil is important for determining representative properties of static shear strength, dynamic shear strength, and moduli.

5.2.2 Preparation of specimens by these techniques more closely simulates the natural deposition processes involving cohesionless materials and produces more uniform specimens than placing and compacting the materials in lifts.

5.2.3 Compacted specimens prepared by methods which do not simulate the natural mode of deposition result in specimens which have a different fabric and structure than natural material in-place. The differences may lead to erroneous conclusions based on results of laboratory tests performed on the specimens.

6. Terminology

6.1 Definitions are in accordance with USBR 3900.

6.2 Terms not included in USBR 3900 specific to this designation are:

6.2.1 *Pluviation.*–A technique in which soil placement is by pouring the soil like rain. Placement may be made by raining the material through air or water.

6.2.2 *Rigid compaction mold.*–Either a cylindrical or square, brass or aluminimum mold which confines a specimen laterally and is an integral piece of the test apparatus in which the specimen is tested. The mold may have a compaction baseplate and collar for facilitating compaction of the specimen. Rigid molds are typically used for one-dimensional consolidation, direct shear, and repeated direct shear testing.

6.2.3 *Split compaction mold.*–A cylindrical compaction mold which is split along a longitudinal axis. The mold opens longitudinally and is fitted with hinges, clasps, pins, or other suitable hardware to rigidly hold the two halves together.

6.2.4 *Stand-up vacuum compaction mold.*–A brass or aluminum split mold designed to rest on a triaxial assembly baseplate where the bottom end plate is the base of the compaction mold. A specimen membrane is held against the inside perimeter of the compaction mold with a vacuum applied between the membrane and the inside perimeter of the split mold.

6.2.5 *Tamping compaction.*–A tamping-type compactive action which compresses equal masses of soil into lifts of equal thickness.

7. Apparatus

7.1 *General Apparatus*:

7.1.1 *Axial Deformation Indicator.*–The axial deformation indicator should be a dial indicator or LVDT (linear variable differential transformer) having 0.001 inch (0.03 mm) resolution. Other measuring devices meeting these requirements for precision and range may be used.

7.1.2 *Balance or Scale.*–Typical balances or scales used for this designation are:

Application	*Readable to*	*Approximate capacity*
Moisture content	0.1 g	1000 g
Mass of compacted specimen:		
Small	0.1 g	1000 g
Medium	0.01 lbm	50 lbm
Large	0.01 lbm	150 lbm

7.1.3 *Desiccator.*–An enclosed container with a moisture-absorbing chemical compound inside, used for cooling a heated soil sample while maintaining zero change in moisture content due to condensation.

7.1.4 *Dish, Evaporating.*–A suitable dish resistant to corrosion or changes in mass when subjected to repeated heating, cooling, or cleaning.

7.1.5 *Drying Oven.*–An oven, thermostatically controlled, preferably of the forced-draft type, and capable of maintaining a uniform temperature of 230±9 °F (110±5 °C) throughout the drying chamber.

7.1.6 *Graduated Cylinder.*–1000-mL capacity, graduated to 10 mL.

7.1.7 *Metal Calibration Specimen.*–A brass, stainless steel, or aluminum, right cylindrical specimen or ring which serves as a reference specimen of known height.

7.1.8 *Pi Tape.*–A scaled pi (π) tape, 2 to 12 inches outside diameter, readable to 0.001 inch, or a metric pi tape, 30 to 200 mm outside diameter, readable to 0.01 mm.

7.1.9 *Porous Inserts.*–Porous inserts are manufactured from silicon carbide, aluminum oxide, sintered bronze, or ceramic. The material must not be susceptible to corrosion by soil substances or moisture. The proper grade (coarseness) of insert depends upon the type of test being performed and the soil being tested.

7.1.10 *Specimen End Plates.*–The end plates must be constructed of a noncorrosive impermeable material such as aluminum, stainless steel, or titanium; and each must have a circular cross section and circular plane surface of contact with the specimen.

7.1.11 *Straightedge.*–A stiff metal straightedge of convenient length. The scraping edge must be beveled if it is thicker than 1/8 inch (3 mm).

7.1.12 *Tamper.*–Metal tampers with square or circular faces having diameters or widths equal to or slightly larger than one-half the diameter or width of the specimen. (See specific procedure for more detailed description.) The stem of the tamper may be engraved with circumferential marks which correspond to a specific thickness of a compacted lift.

7.1.13 *No. 4 Sieve.*–U.S. Standard series No. 4 (4.75 mm) sieve with stand, conforming to the requirements of USBR 1025.

7.1.14 *3-in Sieve.*–U.S. Standard series 3-in (75-mm) sieve conforming to the requirements of USBR 1025.

7.1.15 *Miscellaneous.*–Spatulas, knives, hacksaw blades, mallet, rod, etc.

7.2 *Equipment Unique to Method A* (figs. 1 to 4):

7.2.1 *Split Compaction Mold, Compaction Pedestal, Baseplate, and Collar.*–Cylindrical brass or aluminum split molds are either hinged on one side and have a clasping device on the other side, or the two sides are fastened with pins. Typical mold sizes include:

Diameter, in	*Height, in*
2.0	5.0
2.8	6.5
3.0	9.0
3.25	4.0
6.0	15.0
9.0	22.5

The split compaction mold fits over the compaction pedestal, and is attached to the baseplate which provides a firm base for compacting the soil. The collar provides additional height above the mold to allow the specimen to be compacted to the full height of the mold.

7.2.2 *Liner*:

7.2.2.1 *Plastic Film.*–Square, circular, or rectangular piece of plastic film, cut to fit and line the inside of the split molds; prevents the compacted specimen from adhering to the inside of the split mold.

7.2.2.2 *Heavy Paper.*–A rectangular piece of heavy paper, slit longitudinally, used with 9.0-inch diameter by 22.5-inch high specimens to prevent gravel from penetrating specimen membranes.

7.2.3 *Moisture Proof Containers.*–Glass mason-type jars (1-quart capacity), with a tight sealing lid for storing compacted 2.0-inch-diameter by 5.0-inch-high specimens to be tested.

7.2.4 *Specimen Membrane.*–A membrane used to encase the specimen to isolate it from the chamber fluid.

7.2.5 *Carriage and Rod.*–Refers to either a metal wire basket or other suitable system capable of suspending the compacted specimen, end plates (blank or with porous inserts), membrane, and two O-rings for determining the mass of the specimen suspended in a water bath (used for the mass-in-air/mass-in-water determination).

7.2.6 *Solid Plastic End Plates.*–Plastic end plates having a diameter equal to the diameter of the compacted specimen.

7.2.7 *Lifting Cradle.*–Metal hanger which attaches to the 9.0- by 22.5-inch split mold and is used for lifting the split mold and compacted specimen by mechanical means.

7.3 *Equipment Unique to Method B*:

7.3.1 *Rigid Compaction Mold,* (figs. 5 and 6).–Either a cylindrical or square, brass or aluminum mold which confines a specimen laterally and is an integral piece of the test apparatus in which the specimen is tested. The mold may have a compaction baseplate and collar for facilitating compaction of the specimen. Typical rigid molds for preparing specimens for one-dimensional consolidation and direct and repeated direct shear testing are shown on figures 5 and 6.

7.3.2 *Porous Plates.*–Porous plates made of silicon carbide, aluminum oxide, or other materials not susceptible to corrosion from soil substances or moisture. (For a detailed description, refer to the Apparatus paragraph of the particular USBR designation for which the specimen is being prepared.)

7.4 *Equipment Unique to Method C*:

7.4.1 Stand-up vacuum compaction mold (fig. 7 and 8).–A brass or aluminum split mold designed to sit firmly on top of an end plate used in the triaxial assembly. The mold is flared at the bottom to allow a membrane to be affixed to the bottom end plate with O-rings. A tube through each side of the split mold is connected to longitudinal and circumferential grooves through which the vacuum pulls the membrane to the mold. The diameter of the mold is slightly larger than the diameter of the specimen being formed to accommodate the thickness of the membrane.

7.4.2 *Vacuum Pump.*–A regulatable vacuum pump capable of applying a vacuum equivalent to at least 15 inches of mercury.

7.4.3 *Deformation Indicator Clamp or Reference Stand.*–A clamp or device capable of holding a deformation indicator securely at a fixed height.

7.5 *Equipment Unique to Method D*:

7.5.1 *Pouring Tube With Screen* (fig. 9).–A cylindrical or rectangular tube with a wire screen attached to the bottom end of the tube. The diameter or width of the tube must be slightly smaller than the dimensions of the rigid mold into which the specimen is being placed. The size of the openings in the screen varies with the maximum particle size of the material being placed. In general, the screen opening should be twice the size of the maximum particle size present in the specimen.

7.5.2 *Sifting Screen* (fig. 9).–A circular or square wire screen having a diameter or width slightly smaller than the dimensions of the rigid mold into which the specimen is being placed. A wire bail is attached to the screen and is used to pull the screen through the material which has been placed in the mold.

8. Precautions

8.1 *Safety Precautions*:

8.1.1 The surface upon which the test specimen is compacted must be strong enough to support the compactive effort.

8.1.2 Two persons (or one person with mechanical assistance) should move compacted test specimens having a mass greater than 50 lbm to prevent a possible lifting injury.

8.1.3 This designation may involve hazardous materials, operations, and equipment.

8.2 *Technical Precautions*:

8.2.1 The test specimens should be placed and compacted as quickly as possible to minimize unrecorded moisture loss. If possible, compact the specimen in a humidity controlled room.

8.2.2 Compacted specimens should be moved carefully to prevent disturbance to the specimen.

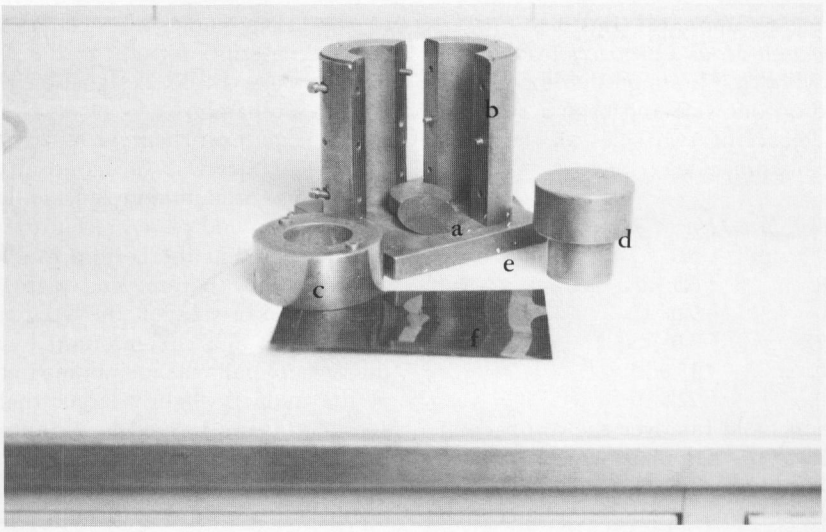

Figure 1.–Split compaction mold equipment (2.0 in diameter by 5.0 in high). a) compaction pedestal, b) split compaction mold, c) compaction collar, d) top plug, e) baseplate, and f) film liners.

Figure 2.–Assembled split compaction mold (2.0-dia. by 5.0-in high). a) top plug, b) compaction collar, c) split compaction mold, and d) tampers.

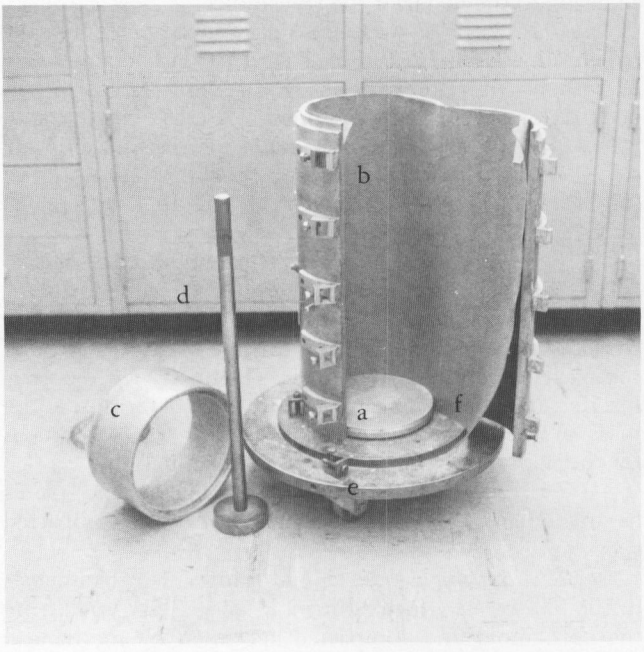

Figure 3.–Split compaction mold equipment (9.0-dia. by 22.5-in high). a) compaction pedestal, b) split compaction mold, c) compaction collar, d) tamper, e) baseplate, and f) paper liner.

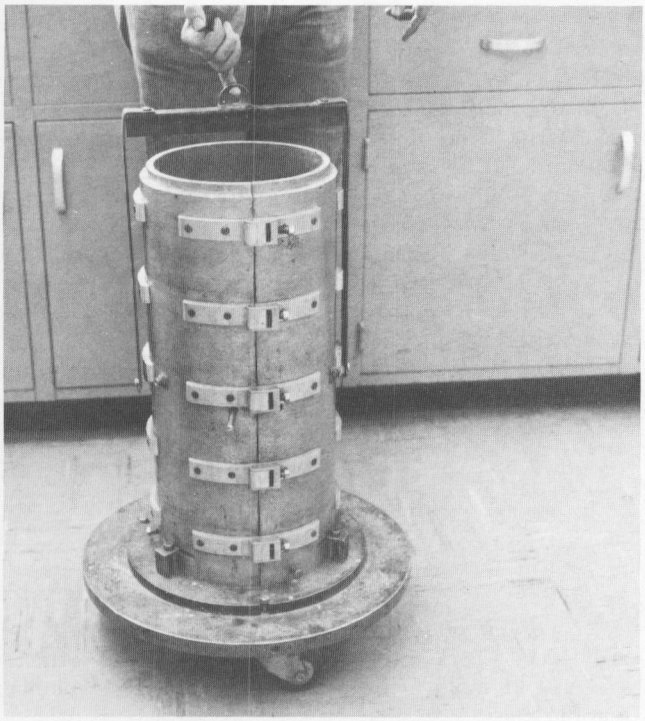

Figure 4.–Assembled split mold with lifting cradle.

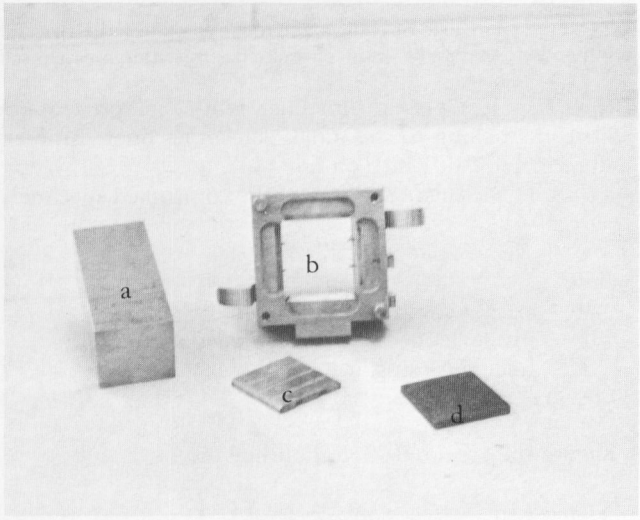

Figure 5.–Direct and repeated direct shear test specimen equipment. a) compaction tamper, b) shear box, c) baseplate, and d) porous plate.

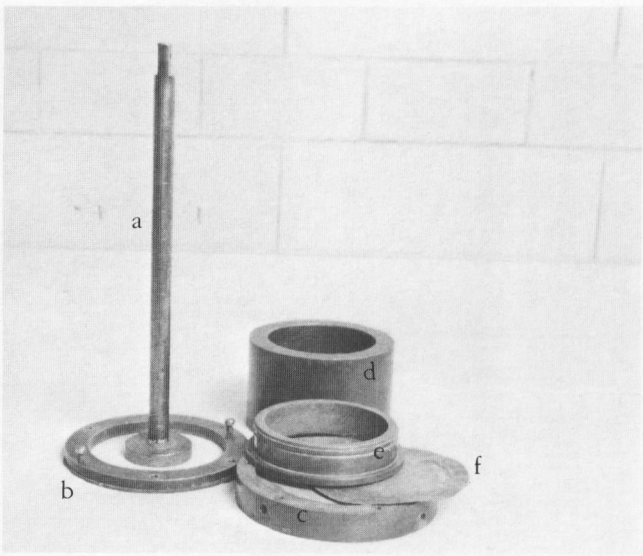

Figure 6.–One-dimensional consolidation, expansion, and uplift test specimen compaction equipment. a) tamper, b) collar and specimen ring retainer, c) compaction baseplate, d) compaction collar, e) specimen ring, and f) plastic liner.

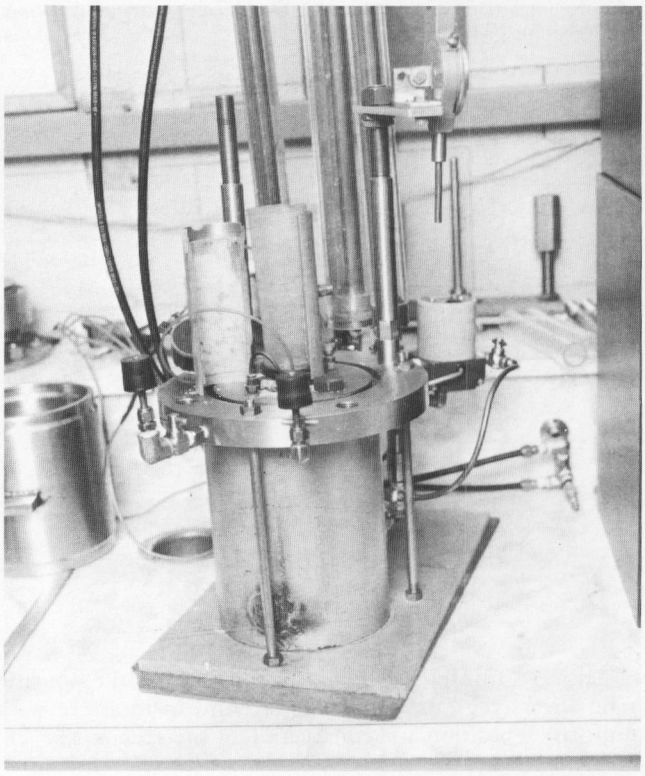

Figure 7.–Stand-up vacuum mold with membrane under vacuum (2.0-dia. by 5.0-in high).

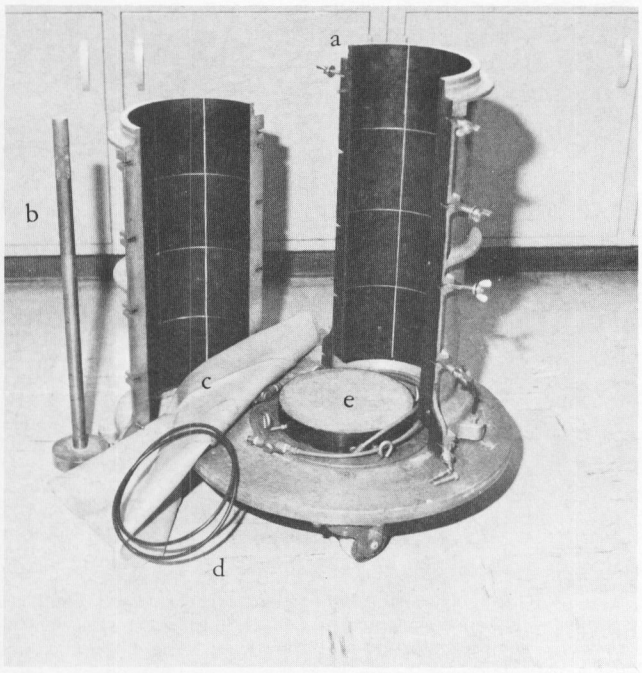

Figure 8.–Stand-up vacuum mold equipment (9.0-dia. by 22.5-in high). a) split compaction mold, b) tamper, c) specimen membrane, d) O-rings, and e) bottom end plate (triaxial).

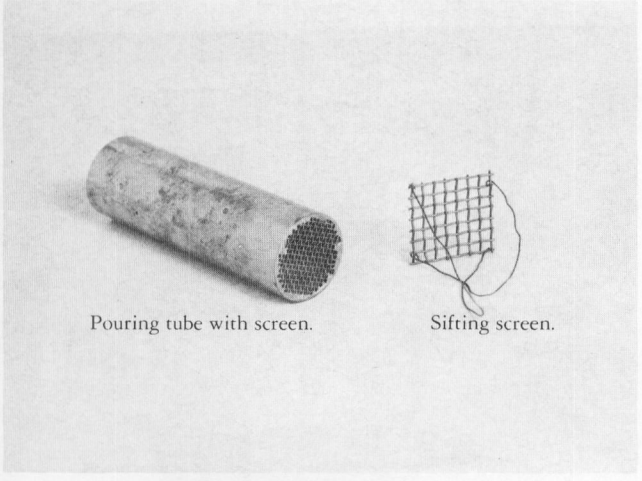

Figure 9.–Pouring tube with screen.

8.2.3 In Methods D and E plugging of the pouring tube wire screen or the sifting screen can interfere with uniform deposition and compaction of the specimens.

9. Sampling, Test Specimens, and Test Units

9.1 *Sample Preparation*:

9.1.1 Prepare a soil sample in accordance with USBR 5205.

9.1.2 All data required to prepare and compact soil specimens are recorded as shown on figures 10 and 11 (data sheet 1 and data sheet 2). If the specimen contains only minus No. 4 material, record the data on "Compaction Data for Specimens of Minus No. 4 Material—Data Sheet 1." If the specimen contains plus No. 4 material (gravel), record the data on "Compaction Data for Specimens Containing Plus No. 4 Material—Data Sheet 2."

9.1.2.1 Record the sample number on line (1) of the form as *Sample No.*

9.1.2.2 Check the box on line (2) denoting the method of compaction being performed.

9.1.2.3 Record the test designation for which the specimens will be used.

9.1.3 Proceed to the appropriate subparagraph depending upon method of specimen preparation.

Method	*Subparagraph*
A	9.2
B	9.5
C	9.6
D	9.7
E	9.8

9.2 *Specimen preparation — Method A*:

9.2.1 Check the boxes on line (4) of the form for the type of mold being used. Record the mold number if applicable.

9.2.2 Record to 0.001 inch the diameter and height of the compaction mold (from the mold calibration data sheet).

NOTE 2.–The size of equipment required to test the material is dependent on the maximum particle size present in the material.

9.2.3 If a plastic film liner is used to prevent the soil from sticking to the mold, determine liner thickness and record to 0.001 inch on line (4d).

9.2.4 Calculate the area of the compacted specimen.

$$A = 0.7854\,(d - 2t)^2 \qquad (1)$$

where:

A = area of compacted specimen, in^2
d = inside diameter of the compaction mold, in
t = liner thickness, in
0.7854 = the constant $\pi/4$

Record the area to 0.001 in^2 on line (4e).

NOTE 3.–If a liner is not used, $t = 0$.

9.2.5 Calculate the volume of the compacted specimen.

$$V = A\,(H - nt) \qquad (2)$$

where:

V = volume of compacted specimen, in^3
H = height of compaction mold, in
n = 1 if a plastic liner is used on the bottom of the compaction mold, or $n = 0$ if a liner is not used
t = liner thickness, in

Record the volume to 0.001 in^3 on line (4f).

7-2388 (12-86)
Bureau of Reclamation

COMPACTION DATA FOR SPECIMENS OF MINUS NO. 4 MATERIAL (DATA SHEET 1)

Designation USBR 5210-89

PROJECT	FEATURE
Example	Example
COMPUTED BY / DATE	CHECKED BY / DATE

1. SAMPLE NO. 100A-1
2. COMPACTION METHOD: ☒ TAMPING COMPACTION ☐ POURING WITH VIBRATION
3. TEST DESIGNATIONS: USBR 5750-CU Triaxial Shear

4. COMPACTION MOLD SYSTEM: ☒ SPLIT MOLD ☐ RIGID MOLD ☐ STAND-UP VACUUM MOLD NO. _____
   - 4a. ☒ CIRCULAR MOLD _____
   - 4b. DIAMETER 2.000 (in) 4c. HEIGHT 5.000 (in)
   - 4d. LINER THICKNESS: — (in)
   - 4e. AREA = 0.7854[a/] [(4b) - 2 x (4d)]^2 3.142 (in^2)
   - 4f. VOLUME = [(4c) - (4d)] x (4e) 15.710 (in^3)
   - 4g. ☐ SQUARE MOLD
   - 4h. LENGTH 1 _____ (in) 4i. LENGTH 2 _____ (in)
   - 4j. HEIGHT _____ (in) 4k. LINER THICKNESS _____ (in)
   - 4L. AREA = [(4h) - (2 x (4k))] [(4l) - (2 x (4k))] _____ (in^2)
   - 4m. VOLUME = [(4j) - (4k)] (4L) _____ (in^3)

5. PLACEMENT CONDITIONS
   - 5a. DESIRED DRY UNIT WEIGHT 115.0 (lbf/ft^3)
   - 5b. PERCENTAGE OF LABORATORY CONTROL TEST ☒ % Comp ☐ % RD 95
   - 5c. DESIRED MOISTURE CONTENT 9.9 (%)
   - 6d. SPECIFIC GRAVITY 2.65

6. COMPACTION DATA
   - 6a. MASS OF DRY SOIL PER SPECIMEN = (5a)(4f or 4m)(5.787 x 10^{-4})[b/] 1.046 (lbm)
   - 6b. NUMBER OF SPECIMENS PER TEST 3
   - 6c. MASS OF DRY SOIL PER TEST = (6a) (6b) [1.05 or 2.0][c/] 6.276 (lbm)
   - 6d. COMPACTION – MOISTURE CONTENT 9.7 (%)
   - 6e. NUMBER OF LIFTS PER SPECIMEN 10
   - 6f. MASS OF WET SOIL PER LIFT = $\frac{(6a)}{(6e)}\left[1 + \frac{(6d)}{100}\right]$[d/] 0.115 (lbm)
   - 6g. MASS OF WET SOIL PER LIFT = 453.6[e/] (6f) 52.2 (g)

7.

		LIFT NO.	MASS OF WET SOIL PLUS CONTAINER ☐ lbm ☒ g			LIFT NO.	MASS OF WET SOIL PLUS CONTAINER ☐ lbm ☒ g
7a.			1025.0				
7b.	(7a) - (6g)	1	972.8	7g.	(7f) - (6g)	6	711.8
7c.	(7b) - (6g)	2	920.6	7h.	(7g) - (6g)	7	659.6
7d.	(7c) - (6g)	3	868.4	7i.	(7h) - (6g)	8	607.4
7e.	(7d) - (6g)	4	816.2	7j.	(7i) - (6g)	9	555.2
7f.	(7e) - (6g)	5	764.0	7k.	(7j) - (6g)	10	503.0 = Container mass

a/ CONSTANT = $\pi/4$

b/ CONSTANT = $\frac{1 ft^3}{1728 in^3} \cdot \frac{1 lbm}{1 lbf}$

c/ CONSTANT = FACTOR TO PROVIDE EXCESS MATERIAL FOR MOISTURE CONTENT DETERMINATION
= 1.05 FOR LARGE SPECIMENS AND 2.0 FOR SMALL SPECIMENS

d/ CONSTANT = $\frac{100\%}{1.0}$

e/ CONSTANT = $\frac{453.6 g}{1 lbm}$

Figure 10.–Compaction data for specimens of minus No. 4 material (data sheet 1) — method A example.

COMPACTION LIFT DATA

8. DEPTH TO BOTTOM OF MOLD (from top of collar) 6.500 (in)

9. DESIRED LIFT THICKNESS 0.500 (in) _____ (in)

10. LIFT HEIGHT MEASUREMENT DATA:

10a. LIFT NUMBER	1	2	3	4	5	6	7	8	9	10
10b. DESIRED DEPTH TO LIFT (8) - (10a)(9)	6.000	5.500	5.000	4.500	4.000	3.500	3.000	2.500	2.000	1.500
10c. DEPTH 1	6.015	5.499	4.485	4.515	4.015	3.485	2.970	2.480	1.995	1.500
10d. DEPTH 2	6.010	5.500	4.480	4.530	3.995	3.515	2.985	2.530	1.985	1.505
10e. DEPTH 3	5.995	5.515	5.000	4.510	3.985	3.500	3.015	2.515	1.970	1.495
10f. AVERAGE DEPTH $\frac{(10c)+(10d)+(10e)}{3}$	6.007	5.505	4.655	4.518	3.998	3.500	2.990	2.508	1.983	1.500

Figure 10.–Compaction data for specimens of minus No. 4 material (data sheet 1) — method A example (back of form) — Continued.

7-2389 (12-86) Bureau of Reclamation	COMPACTION DATA FOR SPECIMENS CONTAINING PLUS NO. 4 MATERIAL (DATA SHEET 2)	Designation USBR 5210-89
PROJECT: Example	FEATURE: Example	
COMPUTED BY / DATE	CHECKED BY / DATE	

1. SAMPLE NO. 100A-2

2. COMPACTION METHOD: [X] TAMPING COMPACTION [ ] POURING WITH VIBRATION

3. TEST DESIGNATION: USBR 5750-CU Triaxial Shear

4. COMPACTION MOLD SYSTEM: [X] SPLIT MOLD [ ] RIGID MOLD [ ] STAND-UP VACUUM [ ] MOLD NO. _____

4a. [X] CIRCULAR MOLD

4b. DIAMETER 9.000 (in) 4c. HEIGHT 22.500 (in)

4d. LINER THICKNESS 0.01 (in)

4e. AREA = 0.7854[a/] [(4b) - 2 x (4d)]^2 63.335 (in^2)

4f. VOLUME = [(4c) - (4d)] x (4e) 1424.404 (in^3)

4g. [ ] SQUARE MOLD

4h. LENGTH 1 _____ (in) 4i. LENGTH 2 _____ (in)

4j. HEIGHT _____ (in) 4k. LINER THICKNESS _____ (in)

4L. AREA = [(4h) - (2 x (4k))] [(4l) - (2 x (4k))] _____ (in^2)

4m. VOLUME = [(4j) - (4k)] (4L) _____ (in^3)

5. PLACEMENT CONDITIONS		MINUS NO. 4 (1)	PLUS NO. 4 (2)	TOTAL (3)
5a. DESIRED DRY UNIT WEIGHT	(lbf/ft^3)	115.0		131.8
5b. PERCENTAGE OF LABORATORY CONTROL TEST	[X] % COMP [ ] %RD	95		95
5c. DESIRED MOISTURE CONTENT	(%)	9.9	2.6	5.2
5d. SPECIFIC GRAVITY		2.65	2.50	2.55
5e. PERCENTAGE OF TOTAL SPECIMEN	(%)	36.3	63.7	100

6. COMPACTION DATA		-NO. 4/ BEDDING LIFT (1)	TOTAL MATERIAL (2)
6a. LIFT THICKNESS	(in)	0.750	3.00
6b. NUMBER OF LIFTS		2	7
6c. MASS OF DRY SOIL PER LIFT	(lbm)	3.161	14.492

(-NO. 4/BEDDING LIFT) = (5a)[1/] x (6a)[1/] x (4e or 4L) x 5.787 x 10^{-4} [b/]

(TOTAL MATERIAL) = (5a)[2/] x (6a)[3/] x (4e or 4L) x 5.787 x 10^{-4} [b/]

1/ USE VALUE FROM COLUMN (1)

2/ USE VALUE FROM COLUMN (3)

3/ USE VALUE FROM COLUMN (2)

a/ CONSTANT = $\pi/4$

b/ CONSTANT = $\left(\frac{1\ ft^3}{1728\ in^3}\right) \cdot \left(\frac{1\ lbm}{1\ lbf}\right)$

Figure 11.–Compaction data for specimens containing plus No. 4 material (data sheet 2) — method A example.

RETAINED ON SIEVE SIZE		1-1/2 in (1)	3/4 in (2)	3/8 in (3)	+ NO. 4 (4)	- No. 4 (5)
6d. PERCENT RETAINED	(%)	25.9	15.5	12.2	10.1	36.3
6e. PERCENT TESTED	(%)		26.1	20.6	17.0	36.3
6f. MASS OF DRY PLUS NO. 4 MATERIAL FOR A SPECIMEN = (6c)1/ x (6b)1/ x (6e)2/ x 0.01 a/	(lbm)		26.48	20.90	17.25	
6g. MASS OF DRY MINUS NO. 4 MATERIAL FOR SPECIMEN LIFTS = (6c)1/ x (6b)1/ x (6e)3/ x 0.01 a/	(lbm)					36.82
6h. MASS OF DRY MINUS NO. 4 MATERIAL FOR BEDDING LIFTS = (6c)4/ x (6b)4/	(lbm)					6.32
6i. NUMBER OF SPECIMENS			3			
6j. MASS OF DRY PLUS NO. 4 MATERIAL PER TEST = (6f)2/ x (6i) x 1.05	(lbm)		83.41	65.84	54.34	
6k. MASS OF DRY MINUS NO. 4 MATERIAL PER TEST [(6g) + (6h)] x (6i) x 1.05	(lbm)					135.89
6L. COMPACTION MOISTURE CONTENT	(%)					9.7
6m. MASS OF WET MINUS NO. 4 MATERIAL PER BEDDING LIFT = (6c)4/ x [1 + (6L) x 0.01 a/]	(lbm)					3.47
6n. MASS OF WET MINUS NO. 4 MATERIAL PER SPECIMEN LIFT = (6g) x [1 + (6L) x 0.01 a/] / (6b)1/	(lbm)					5.77
6o. MASS OF WET PLUS NO. 4 MATERIAL PER SPECIMEN LIFT = (6f)2/ x [1 + (6c)1/ x 0.01 a/] / (6b)1/	(lbm)		3.88	3.06	2.53	
6p. CUMULATIVE WET MASS OF SOIL PER SPECIMEN LIFT	(lbm)		3.88	6.94	9.47	15.24

COMPACTION LIFT DATA

8. DEPTH TO BOTTOM OF MOLD (FROM TOP OF COLLAR) 25.500 (in)
9. DESIRED LIFT THICKNESS 0.750 3.000 (in)

10. COMPACTION LIFT DATA:

10a. LIFT NUMBER	1	2	3	4	5	6	7	8	9	10	
10b. DESIRED DEPTH TO LIFT: (8) - (10a)(9)	24.750	21.750	18.750	15.750	12.750	9.750	6.750	3.750	3.000		(in)
10c. DEPTH 1	24.700	21.750	18.780	15.700	12.700	9.700	6.750	3.750	3.000		(in)
10d. DEPTH 2	24.670	21.750	18.810	15.750	12.800	9.800	6.850	3.810	3.030		(in)
10e. DEPTH 3	24.730	21.750	18.750	15.800	12.750	9.700	6.800	3.750	3.050		(in)
10f. AVERAGE DEPTH (10c)+(10d)+(10e) / 3	24.700	21.750	18.780	15.750	12.750	9.733	6.800	3.770	3.027		(in)

1/ USE VALUE FROM COLUMN (2)
2/ USE VALUES FROM COLUMNS (2), (3), (4), RESPECTIVELY
3/ USE VALUES FROM COLUMN (5)
4/ USE VALUES FROM COLUMN (1)

a/ CONSTANT = (1 / 100%)
b/ CONSTANT = FACTOR TO PROVIDE EXCESS MATERIAL FOR MOISTURE CONTENT DETERMINATION

GPO 853 - 021

Figure 11.–Compaction data for specimens containing plus No. 4 material (data sheet 2) — method A example (back of form) — Continued.

9.3 *Placement Conditions.*-If the specimen contains plus No. 4 material proceed to subparagraph 9.3.2, otherwise continue with subparagraph 9.3.1. Record the following desired placement conditions.

9.3.1 Specimens consisting of minus No. 4 material only (fig. 10):

9.3.1.1 Record the value of desired dry unit weight to 0.1 lbf/ft³, percentage of laboratory control test to 0.1 percent, desired moisture content to 0.1 percent, and specific gravity to 0.01 on lines (5a), (5b), (5c), and (5d), respectively.

9.3.1.2 Proceed to subparagraph 9.4.

9.3.2 Specimens consisting of plus and minus No. 4 material (fig. 11):

9.3.2.1 Record the information described in subparagraph 9.3.1.1 in section 5, column (1) as shown on the form (fig. 11). The placement information for the minus No. 4 material is used to calculate the masses of material required for the bedding lifts (minus No. 4 material only) (fig. 12) and the total lifts (plus and minus No. 4 material).

9.3.2.2 Record the value of desired moisture content to 0.1 percent, specific gravity to 0.01, and percentage of minus No. 4 material in the total specimen to 0.1 percent in column (2) as shown on figure 11.

9.3.2.3 Record the absorption to 0.1 percent, specific gravity to 0.01, and percentage of plus No. 4 material in the total specimen to 0.1 percent on line (5c) in column (2) as shown on figure 11.

9.3.2.4 Record the desired dry unit weight to 0.1 lbf/ft³, the percentage of laboratory control test to 0.1 percent, and desired moisture content to 0.1 percent of the total specimen in column (3) as shown on figure 11.

NOTE 4.-If a laboratory control test is not performed, the maximum dry unit weight may be estimated as described in USBR 5515 and the total specimen moisture content can be calculated.

$$w_t = \frac{[w_{c(+4)}\, P_{(+4)}] + [w_{c(-4)}\, P_{(-4)}]}{100} \qquad (3)$$

where:

w_t = moisture content of total specimen, %
$w_{c(+4)}$ = absorption of plus No. 4 material, %
$P_{(+4)}$ = percentage of plus No. 4 material in specimen, %
$w_{c(-4)}$ = desired moisture content of minus No. 4 material, %
$P_{(-4)}$ = percentage of minus No. 4 material in specimen, %
100 = convert from percent to decimal

9.3.2.5 Calculate the specific gravity of the total specimen.

$$G = \frac{100}{\frac{P_{(-4)}}{G_{(-4)}} + \frac{P_{(+4)}}{G_{(+4)}}} \qquad (4)$$

where:

G = specific gravity of total specimen
$P_{(-4)}$ = percentage of minus No. 4 material in specimen, %

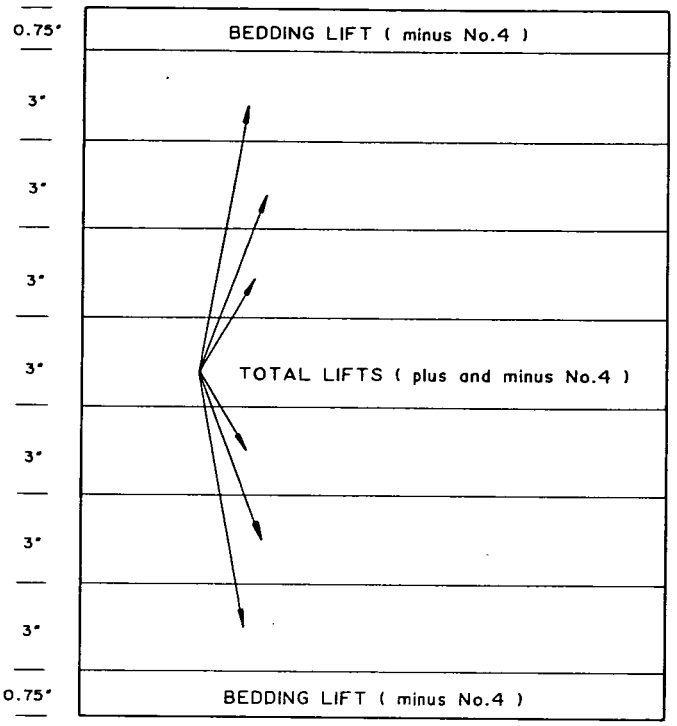

Figure 12.-Bedding lift placement information.

$P_{(+4)}$ = percentage of plus No. 4 material in specimen, %
$G_{(-4)}$ = specific gravity of minus No. 4 material in specimen
$G_{(+4)}$ = specific gravity of plus No. 4 material in specimen

[Record the specific gravity to 0.01 on line 5d in col. (3).]

9.4 *Compaction Data.*-Compaction data are calculated using inch-pound units. A conversion is supplied to determine the mass in metric units for subsequent measurement of the specimen mass when the use of balances and scales in metric units provides greater accuracy.

- Subparagraph 9.4.1 describes the procedure for calculating data required for compacting specimens consisting of only minus No. 4 material.
- Subparagraph 9.4.2 describes the procedure for calculating data required for compacting specimens containing both plus and minus No. 4 material.
- If the specimen contains plus No. 4 material proceed to subparagraph 9.4.2, otherwise continue with subparagraph 9.4.1.

9.4.1 Compaction data — minus No. 4 material only. Record all data in section 6 on data sheet 1 (fig. 10).

9.4.1.1 Calculate the mass of dry minus No. 4 material required per specimen.

$$M_{s,\,d(-4)} = \gamma_d\, V (5.787 \times 10^{-4}) \qquad (5)$$

where:

$M_{s,\ d(-4)}$ = mass of dry minus No. 4 material per specimen, lbm
$\gamma_{d(-4)}$ = desired dry unit weight of minus No. 4 material, lbf/ft³
V = volume of compacted specimen, in³
5.787×10^{-4} = constant for inch-pound units, changes in³ to ft³ (assume 1 lbm = 1 lbf)

[Record the mass to 0.001 lbm on line (6a).]

9.4.1.2 Calculate the mass of dry minus No. 4 material required per test.

$$M_{t,\ d(-4)} = M_{s,\ d(-4)}\ S\ \text{Con2} \quad (6)$$

where:

$M_{t,\ d(-4)}$ = mass of dry minus No. 4 material per test, lbm
$M_{s,\ d(-4)}$ = mass of dry minus No. 4 material per specimen, lbm
S = number of specimens required for a test
Con2 = constant (A 1.05 provides 5% surplus material for large specimens and a 2.0 provides 100% surplus material for small specimens.)

[Record the mass to 0.001 lbm on line (6c).]

NOTE 5.–The constant equal to 1.05 or 2.0 provides excess material for specimens for moisture determinations and material loss during handling.

9.4.1.3 Prepare the minus No. 4 material to the proper moisture content as described in appendix X2. Place the material in plastic, moisture proof bags, and store in accordance with the following standing times.

Classification, USBR 5005	*Minimum standing time, hours*
SM	3
ML, CL, OL, SC	18
MH, CH, Pt	36

9.4.1.4 Check the moisture content of the material according to USBR 5300; record the data on the back of the form titled "Compacted Specimen Placement Data Sheet" (fig. 18). The moisture content of the minus No. 4 material must be within ±0.5 percentage points of the desired moisture content as recorded on line (5c) (fig. 10). If the material moisture content varies from the desired moisture content by more than ±0.5 percentage points, the moisture content must be adjusted according to the procedure described in appendix X2.

Record the moisture content to 0.1 percent as *Compaction moisture content (%)* on line (6d).

9.4.1.5 Determine and record the number of lifts to be used to compact the specimen.

9.4.1.6 Calculate the mass of wet minus No. 4 material required for each lift.

$$M_{l,\ w(-4)} = \frac{M_{s,\ d(-4)}\left(1 + \frac{w_{(-4)}}{100}\right)}{N_l} \quad (7)$$

where:

$M_{l,\ w(-4)}$ = mass of wet minus No. 4 material per lift, lbm
$M_{s,\ d(-4)}$ = mass of dry minus No. 4 material per specimen, lbm
$w_{(-4)}$ = compaction moisture content, %
N_l = number of lifts
100 = convert from percent to decimal

[Record the masses to 0.001 lbm on line (6f).]

9.4.1.7 If desired, convert the wet mass of soil required per lift from lbm to g.

$$(1) = (2)\ \text{Con3} \quad (8)$$

where:

(1) = converted mass of soil required per lift, g
(2) = mass of wet soil per lift, lbm
Con3 = 453.6, g/lbm

[Record the mass to 0.1 g on line (6g).]

9.4.1.8 Place the mass of wet minus No. 4 material required for a single specimen in a container with a tight fitting lid, and determine the mass of the wet soil and container. Record the mass to 0.001 lbm on line (7a) as *Mass of wet soil plus container (lbm)* (fig. 10).

9.4.1.9 Calculate the mass of wet soil plus container after the mass of wet soil for a single lift is removed from the container.

$$M_n = M_c - M_{l,\ w(-4)} \quad (9)$$

where:

M_n = new mass of wet soil plus container, lbm
M_c = mass of wet soil plus container, lbm
$M_{l,\ w(-4)}$ = mass of wet minus No. 4 material per lift, lbm

[Record the mass to 0.005 lbm or 0.1 g on line (7b) through (7k) (fig. 10).]

9.4.1.10 Repeat subparagraph 9.4.1.9 until the mass of wet minus No. 4 soil plus container has been calculated and recorded for each lift.

9.4.1.11 Proceed to paragraph 10.

9.4.2 Compaction data — plus No. 4 and minus No. 4 material. Record all data on data sheet 2 (fig. 11).

NOTE 6.–This subparagraph describes calculation of data required to compact a test specimen containing both plus No. 4 and minus No. 4 material. The example data are for a 9.0-inch diameter by 22.5-inch high specimen which consists of two 3/4-inch thick lifts of only minus No. 4 material (bedding lifts)—one on each end of the specimen—and seven 3-inch thick lifts of plus No. 4 and minus No. 4 material (fig. 12).

9.4.2.1 Record the thickness of any lifts containing only minus No. 4 material (bedding lifts) and the thickness of any lifts containing both plus No. 4 and minus No. 4 material to 0.001 inch on line (6a) columns (1) and (2) as shown on figure 11.

9.4.2.2 Record the number of lifts in which the specimen will be compacted on line (6b).

9.4.2.3 Calculate the mass of dry minus No. 4 material required for one bedding lift.

$$M_{lb,\,d(-4)} = \gamma_{d(-4)}\, L_{(-4)}\, A\, (5.787 \times 10^{-4}) \qquad (10)$$

where:

$M_{lb,\,d(-4)}$ = mass of dry minus No. 4 material for one bedding lift, lbm
$\gamma_{d(-4)}$ = desired dry unit weight of minus No. 4 material, lbf/ft³
$L_{(-4)}$ = lift thickness, in
5.787×10^{-4} = constant for inch-pound units, changes in³ to ft³ (assume 1 lbm = 1 lbf)
A = specimen area, in²

[Record the mass to 0.001 lbm on line (6c) in col. (1).]

9.4.2.4 Calculate the mass of dry plus No. 4 and minus No. 4 material required for one specimen lift.

$$M_{ls,\,d(+4,-4)} = \gamma_{d(t)}\, L_{(t)}\, A\, (5.787 \times 10^{-4}) \qquad (11)$$

where:

$M_{ls,\,d(+4,-4)}$ = mass of dry plus and minus No. 4 material for one specimen lift, lbm
$\gamma_{d(t)}$ = desired dry unit weight of total specimen, lbf/ft³
$L_{(t)}$ = lift thickness, in
A = area of compacted specimen mold, in²
5.787×10^{-4} = constant for inch-pound units, converts in³ to ft³ (assume 1 lbm = 1 lbf)

[Record the mass to 0.001 lbm on line (6c) col. (2).]

9.4.2.5 Determine the percentage of gravel retained on the 1-1/2-, 3/4-, 3/8-inch, and No. 4 sieves and record to 0.1 percent (as determined using USBR 5325) on the back of data sheet 2 on line (6d) in columns (1), (2), (3), and (4) as *Percent retained (%).*

9.4.2.6 Determine the percentage of material passing the No. 4 sieve and record to 0.1 percent on line (6d) in column (5) and on line (6e) in column (5) as *Percent retained (%),* and *Percent tested (%),* respectively.

9.4.2.7 Determine the gradation of material to be tested, as described in appendix X1. Record the adjusted gradation on line (6e) in the appropriate column as *Percent tested (%).*

9.4.2.8 Calculate the mass of each size of dry plus No. 4 material for all specimen lifts in a specimen.

$$M_{s,\,d(+4)} = M_{ls,\,d(+4,-4)}\, N_{l(+4,-4)}\, \frac{P_{r(+4)}}{100} \qquad (12)$$

where:

$M_{s,\,d(+4)}$ = mass of each size of dry plus No. 4 material for all specimen lifts in a specimen, lbm
$N_{l(+4,-4)}$ = number of specimen lifts
$M_{ls,\,d(+4,-4)}$ = mass of dry plus and minus No. 4 material for one specmen lift, lbm
$P_{r(+4)}$ = percent retained of each size of plus No. 4 material, %
100 = convert from percent to decimal

[Record the mass to 0.01 lbm on line (6f) in cols. (2) through (4).]

9.4.2.9 Calculate the mass of dry minus No. 4 material for all specimen lifts in a specimen.

$$M_{s,\,d(-4)} = M_{ls,\,d(+4,-4)}\, N_{l(+4,-4)}\, \frac{P_{r(-4)}}{100} \qquad (13)$$

where:

$M_{s,\,d(-4)}$ = mass of dry minus No. 4 material for all specimen lifts in a specimen, lbm
$P_{r(-4)}$ = percent of minus No. 4 material, %
100 = convert from percent to decimal

[Record the mass to 0.01 lbm on line (6g) in col. (5).]

9.4.2.10 Calculate the dry mass of minus No. 4 material for all bedding lifts in a specimen.

$$M_{sb,\,d(-4)} = M_{lb,\,d(-4)}\, N_{lb(-4)} \qquad (14)$$

where:

$M_{sb,\,d(-4)}$ = mass of dry minus No. 4 material for all bedding lifts in specimen, lbm
$M_{lb,\,d(-4)}$ = mass of dry minus No. 4 material for one bedding lift, lbm
$N_{lb(-4)}$ = number of bedding lifts

[Record the mass to 0.01 lbm on line (6h) in col. (5).]

9.4.2.11 Determine the number of specimens required for a test and record on line (6i).

9.4.2.12 Calculate the total mass of dry plus No. 4 material of each size required for a test.

$$M_{t,\,d(+4)} = 1.05\, M_{s,\,d(+4)}\, S \qquad (15)$$

where:

$M_{t,\,d(+4)}$ = mass of each size of dry plus No. 4 material for a test, lbm
$M_{s,\,d(+4)}$ = mass of each size of dry plus No. 4 material for a specimen, lbm
S = number of specimens required for a test
1.05 = constant (It provides 5% surplus material for preparing the gravel for the test specimen.)

[Record the mass to 0.01 lbm on line (6j) in cols. (2), (3), and (4).]

9.4.2.13 Calculate the total mass of dry minus No. 4 material required for a test.

$$M_{t,\,d(-4)} = 1.05\,(M_{s,\,d(-4)} + M_{sb,\,d(-4)})\,S \qquad (16)$$

where:

$M_{t,\,d(-4)}$ = mass of dry minus No. 4 material required for a test, lbm
$M_{s,\,d(-4)}$ = mass of dry minus No. 4 material required for all specimen lifts in a specimen, lbm
$M_{sb,\,d(-4)}$ = mass of dry minus No. 4 material required for all specimen bedding lifts in a specimen, lbm
1.05 = constant (It provides 5% surplus material.)

[Record the mass to 0.01 lbm on line (6k) in col. (5).]

9.4.2.14 Prepare the mass of minus No. 4 material calculated in subparagraph 9.4.2.13 to the desired moisture content and check the moisture content according to subparagraphs 9.4.1.3 and 9.4.1.4. Compare to the value on the back of the "Compacted Specimen Placement Data Sheet" (fig. 17). Record the moisture content to 0.1 percent on line (6L) in column (5) as *Compaction moisture content (%)*.

9.4.2.15 Calculate the mass of wet minus No. 4 material for one bedding lift.

$$M_{lb,\,w(-4)} = M_{lb,\,d(-4)}\left(1 + \frac{w_{(-4)}}{100}\right) \qquad (17)$$

where:

$M_{lb,\,w(-4)}$ = mass of wet minus No. 4 material for one bedding lift, lbm
$M_{lb,\,d(-4)}$ = mass of dry minus No. 4 material for one bedding lift, lbm
$w_{(-4)}$ = compaction moisture content, %
100 = convert from percent to decimal

[Record the mass to 0.01 lbm on line (6m) in col. (5).]

9.4.2.16 Calculate the mass of wet minus No. 4 material to be used for one specimen lift.

$$M_{ls,\,w(-4)} = \frac{M_{s,\,d(-4)}\left(1 + \frac{w_{(-4)}}{100}\right)}{N_{l(+4,-4)}} \qquad (18)$$

where:

$M_{ls,\,w(-4)}$ = mass of wet minus No. 4 material in one specimen lift, lbm
$M_{s,\,d(-4)}$ = mass of dry minus No. 4 material for all specimen lifts in a specimen, lbm
$w_{(-4)}$ = compaction moisture content, %
$N_{l(+4,-4)}$ = number of specimen lifts
100 = convert from percent to decimal

[Record the mass to 0.01 lbm on line (6n) in col. (5).]

9.4.2.17 Calculate the mass of each size of wet plus No. 4 material for one specimen lift.

$$M_{ls,\,w(+4,-4)} = \frac{M_{s,\,d(+4,-4)}\left(1 + \frac{w_{(+4)}}{100}\right)}{N_{l(+4,-4)}} \qquad (19)$$

where:

$M_{ls,\,w(+4,-4)}$ = mass of each size of wet plus No. 4 material for one specimen lift, lbm
$M_{ls,\,d(+4,-4)}$ = mass of each size of dry plus and minus No. 4 material for one specimen lift, lbm
$w_{(+4)}$ = absorption of plus No. 4 material, %
100 = convert from percent to decimal

[Record the masses to 0.01 lbm on line (6o) in cols. (2) through (4).]

9.4.2.18 Calculate the cumulative mass of each size of wet plus and minus No. 4 material for a specimen lift.

$$(1) = (2) + (3) \qquad (20)$$

where:

(1) = cumulative wet mass, lbm
(2) = previous cumulative wet mass, lbm
(3) = wet mass of next smaller particle size, lbm

[Record the masses to 0.01 lbm on line (6p) in cols. (2) through (5).]

9.4.2.19 Proceed to paragraph 10.

9.5 *Specimen Preparation — Method B*:

9.5.1 Prepare a sample then calculate and record the data required to prepare and compact a specimen as described in subparagraph 9.1 through 9.2.3 as shown on figure 13.

9.5.2 Calculate the area of the compacted specimen.

9.5.2.1 Circular mold (refer to subpar. 9.2.4).

9.5.2.2 Square mold:

$$A = (l_1 - 2t)\,(l_2 - 2t) \qquad (21)$$

where:

A = area of compacted specimen, in^2
l_1 = length of one side of mold, in
l_2 = length of adjacent side of mold, in
t = liner thickness, in

[Record the area to 0.001 in^2 on line (4e).]

NOTE 7.–If a liner is not used, $t = 0$.

9.5.3 Proceed to paragraph 10.

9.6 *Specimen Preparation — Method C*:

9.6.1 Prepare a sample then calculate and record the data required to prepare and compact a specimen as described in subparagraphs 9.1 through 9.4 as shown on data sheet 1 (fig. 14).

9.6.2 Proceed to paragraph 10.

9.7 *Specimen Preparation — Method D*:

9.7.1 Prepare a sample then calculate and record the data required to prepare a specimen as described in subparagraphs 9.1, 9.2, and 9.3 using data sheet 1 (fig. 15). Calculate the mass of dry soil required for a specimen as described in subparagraphs 9.4.1.1 and 9.4.1.2.

9.7.2 As required, oven or air dry the mass of minus No. 4 material calculated in subparagraph 9.7.1. If oven drying is required, place the material in a drying oven for about 16 hours at 110 °C. After drying, store the material in a plastic moisture proof bag.

9.7.3 If oven dried material is used, record the value of desired moisture content as "0" on line (5c) (fig. 15). If air drying is used, the actual moisture content is determined using USBR 5300 and recorded on line (5c).

9.7.4 Proceed to paragraph 10.

9.8 *Specimen Preparation — Method E*:

9.8.1 Prepare a sample then calculate and record the data required to prepare a specimen as described in subparagraphs 9.1, 9.2, and 9.4.1. Calculate the mass of dry soil required for a specimen as described in subparagraphs 9.3.1.1 and 9.4.1.2 (fig. 16).

9.8.2 Check the moisture content of the material according to USBR 5300. Record the moisture content to 0.1 percent as *Compaction moisture content (%)* on line (6d).

9.8.3 Oven dry the minus No. 4 material in an oven for about 16 hours at 110 °C. After the material is dry, place it in a desiccator until cool, and store it in a moisture proof container.

10. Preparation of Apparatus

Proceed to the appropriate subparagraph depending upon the method being used to compact a specimen.

Method	*Subparagraph*
A	10.1
B	10.2
C	10.3
D	10.4
E	10.5

10.1 *Method A*:

10.1.1 Prior to preparing the compaction mold, ensure that it has been calibrated according to paragraph 11.

10.1.2 Inspect the split compaction mold for wear or damage. The mold should close tightly at both edges. The hinges, clasps, and/or pins should move freely. The closed mold should sit snugly on the compaction base and have a means for securely fastening the mold to the base. The collar should easily slip on and off the top of the compaction mold.

10.1.3 Inspect the lining material for wear and damage, replace if necessary.

10.1.4 Inspect the membrane in which the specimen will be tested for wear and holes, replace if necessary.

NOTE 8.–The compacted dry unit weight of the specimen may be determined by direct linear measurement or by the mass-in-air/ mass-in-water method. A membrane is required to perform the mass-in-air/mass-in-water method.

10.1.5 Proceed to paragraph 11.

10.2 *Method B*:

10.2.1 Refer to subparagraph 10.1.1 and 10.1.2.

10.2.2 Proceed to paragraph 11.

10.3 *Method C*:

10.3.1 Inspect the specimen end plate and flush the porous insert as specified in the procedure by which the specimen will be tested.

10.3.2 Inspect the stand-up vacuum mold to make sure it fits easily over the bottom end plate and sits securely on the test system baseplate.

10.3.3 Inspect the specimen membrane in which the specimen will be tested for wear and holes, replace if necessary.

10.3.4 Air dry end plates and end plate porous inserts using compressed air at less than 30 lbf/in^2 pressure.

10.3.5 Proceed to paragraph 11.

10.4 *Method D*:

10.4.1 Refer to subparagraphs 10.1.1 and 10.1.2.

10.4.2 Proceed to paragraph 11.

10.5 *Method E*:

10.5.1 Refer to subparagraph 10.3.

11. Calibration and Standardization

11.1 *Methods A through E*:

11.1.1 Verify that equipment is currently calibrated in accordance with the applicable calibration procedure. If the calibration is not current, perform the calibration before using the equipment for this procedure.

USBR 1009 Calibrating Compaction Molds
USBR 1012 Calibrating Balances or Scales
USBR 1020 Calibrating Ovens

12. Conditioning

12.1 *Selected Method.*–Proceed to the appropriate subparagraph depending upon the method being used to compact a specimen.

Method	*Subparagraph*
A, B, C	12.2
D	12.3
E	12.4

12.2 *Methods A, B, and C*:

12.2.1 Place the minus No. 4 material for each specimen in moisture proof plastic bags and store in accordance with the following standing times.

Classification, USBR 5000 or 5005	*Minimum standing time, hours*
SM	3
ML, CL, OL, SC	18
MH, CH, OH, PT	36

12.2.2 Place each size of plus No. 4 material in a separate pan and soak in tap water. Allow the gravel to soak at least 16 hours prior to preparing a test specimen.

12.2.3 Proceed to paragraph 13.

12.3 *Method D*:

12.3.1 Place the minus No. 4 material for each specimen in a moisture proof plastic bag and store in a dry place.

NOTE 9.–The presence of more than 2 to 3 percent moisture may cause the material to bulk and not to pour freely from the pouring funnel and can or pouring tube. If the material bulks redry the material in an oven and repeat subparagraphs 9.7.2 and 9.7.3.

12.3.2 Proceed to paragraph 13.

12.4 *Method E*:

12.4.1 Place the minus No. 4 material for each specimen in a moisture proof container and store in a dry place.

13. Procedure

Proceed to the appropriate subparagraph depending upon the method being used to compact a specimen.

Method	*Subparagraph*
A	13.1
B	13.2
C	13.3
D	13.4
E	13.5

13.1 *Method A.*–If the specimen contains plus No. 4 material proceed to subparagraph 13.1.2, otherwise continue with subparagraph 13.1.1.

13.1.1 Compacting specimens consisting of minus No. 4 material:

13.1.1.1 All data required to place the specimen were previously calculated and recorded on lines (7a) through (7k) on data sheet 1 "Compaction Data for Specimens of Minus No. 4 Material" (fig. 10).

13.1.1.2 Assemble the split mold by closing and fastening the mold and securely fastening the mold to the compaction baseplate.

13.1.1.3 Place a circular piece of liner in the bottom of the mold, and a rectangular piece of liner around the inside perimeter of the mold to the top of the mold without the compaction collar. Attach the compaction collar to the top of the mold.

13.1.1.4 Place the moisture proof container with wet soil (with the lid on) onto a scale or balance. The mass should equal that previously measured in subparagraph 9.4.1.8 and recorded on line (7a) as *Mass of wet soil plus container*. If the current value is different, cross out the old value and record the new value beside it. Recalculate the mass of the container, container lid, and wet soil left after the mass of wet soil required for one lift is removed as described in subparagraph 9.4.1.9.

13.1.1.5 Determine the depth to the top of each compacted lift as follows.

13.1.1.5.1 Direct measurement:

13.1.1.5.1.1 Measure the depth from the top of the compaction collar to the bottom of the mold to ±0.001 inch using a ruler. Record the value to 0.001 inch on the back of the form as shown (fig. 10).

13.1.1.5.1.2 Record the desired thickness of each lift to 0.001 inch on the back of the form (fig. 10).

NOTE 10.–If all the lifts are not to be a uniform thickness (as for the 9.0-in diameter by 22.5-in high specimen, with bedding layers) record the different thicknesses to be used.

13.1.1.5.1.3 Calculate the desired depth from the top of the compaction collar to the surface of each compacted lift by subtracting the thickness of each lift from the measured depth from top of collar to bottom of mold.

$$D_l = D_b - nT_l \qquad (22)$$

where:

D_l = depth to surface of each compacted lift, in
D_b = depth from top of collar to bottom of mold, in
n = lift number
T_l = desired thickness of each successive compacted lift, in

[Record the values on line (10b) as shown on figure 10.]

13.1.1.5.2 Indirect measurement:

NOTE 11.–Subparagraph 13.1.1.5.2.1 refers to the technique where the thickness of a compacted lift is measured using either a calibrated stick or calibration marks engraved on the stem of the tamper.

13.1.1.5.2.1 Visually compare the height of the calibration mark on the stem of the tamper which corresponds to the full height of the specimen to the surface of the top of the compaction collar using a straight edge. The mark must be within ±0.030 inch of the surface of the compaction collar.

13.1.1.6 Remove the cover from the container, set the cover on the balance, and remove a sufficient mass of wet soil until the scale or balance reads the mass previously calculated in subparagraph 13.1.1.4 and shown on line (7b) as shown on figure 10. Replace the cover on the container.

13.1.1.7 Place the soil in the compaction mold and spread it to a uniform thickness in the mold.

13.1.1.8 Set the tamper on the soil and lightly compress the soil. Repeat this until the entire surface of the soil has been compressed.

NOTE 12.–The diameter of the tamper face should be at least 1/2—but less than 3/4—the diameter of the compaction mold.

13.1.1.9 Compact the soil by tamping with the tamper. Move the tamper around the surface of the lift to distribute the compaction effort.

13.1.1.10 Measure the depth from the top of the collar to the surface of the compacted lift.

13.1.1.10.1 Direct measurement:

13.1.1.10.1.1 Measure the depth from the top of the compaction collar to the surface of the compacted

lift of soil in three locations at approximately 120-degree intervals around the perimeter of the mold. Record the values to the nearest 0.001 in on lines (10c), (10d), and (10e) in column (1) as Depth 1, Depth 2, and Depth 3 as shown on figure 10.

13.1.1.10.1.2 Calculate the average depth.

$$d_a = \frac{d_1 + d_2 + d_3}{3} \quad (23)$$

where:

d_a = average depth to compacted lift, in
d_1, d_2, d_3 = individual depth measurements, in
3 = constant to average values

[Record the average depth to nearest 0.001 inch on line (10f) of the form as *Average depth (in).*]

13.1.1.10.1.3 Compare the average depth (10f) to the desired depth (10a). The average depth must be equal to the desired depth ±0.030 inch ($d_a = D_l \pm 0.030$). If the average depth is greater than the desired depth (±0.030 in) remove the compacted soil. The specimen is too dense and must be recompacted according to the procedure described in subparagraph 13.1. If the average depth is less than the desired depth (-0.030 in), the specimen is too loose; apply additional compactive effort and repeat subparagraph 13.1.10.

NOTE 13.–If additional measurements are required because the specimen must be removed and recompacted or additional compactive effort is required, cross off the old depth measurements before proceeding.

13.1.1.10.2 Indirect measurement:

13.1.1.10.2.1 Visually compare the height of the calibration mark corresponding to the height of the first compaction lift to the surface of the compaction collar using a straight edge. The mark must be within ±0.030 inch of the mark on the tamper or ruler. If the mark is more than 0.030 inch below the straight edge, the specimen is too dense and must be removed and recompacted according to the procedure described in subparagraph 13.1.1. If the mark is more than 0.030 inch above the straight edge, apply additional compactive effort and repeat subparagraph 13.1.1.10.1.3.

NOTE 14.–The height of each compacted lift may also be controlled by attaching a collar to the stem of the tamper. The collar must have a diameter greater than the specimen diameter. The collar is set to the predetermined calibration mark corresponding to the thickness of the lift being compacted.

13.1.1.11 After the lift is compacted to the proper height, scarify the surface of the compacted lift—using a knife or sharp edged instrument—to a depth of approximately one-tenth the depth of the lift.

13.1.1.12 Rotate the split mold approximately 90 degrees.

13.1.1.13 Remove the mass of soil from the container, which is required for the next lift (subpar. 13.1.1.6), and place it in the mold.

13.1.1.14 Spread the soil to a uniform thickness. Compact the soil to the desired height as described in subparagraphs 13.1.1.8 through 13.1.1.10.

13.1.1.15 Repeat subparagraphs 13.1.1.7 through 13.1.1.14 until the entire specimen has been compacted.

13.1.1.16 Place the compaction mold plug into the collar and strike firmly with a rubber mallet until the plug is seated on the top of the compaction collar.

NOTE 15.–The compaction mold system may not have a compaction mold plug, but instead a disc with diameter slightly smaller than the diameter of the compaction mold.

13.1.1.17 Remove the plug and collar from the compaction mold.

13.1.1.18 If the soil extends slightly above the top of the compaction mold, replace the compaction mold plug on top of the specimen, center the plug on the specimen and strike the plug several times with a rubber mallet.

13.1.1.19 Remove the compaction mold plug.

13.1.1.20 Roughen the surface of the specimen using the teeth of a hacksaw blade by moving the blade slowly back and forth across the top of the specimen using a sawing motion.

NOTE 16.–It may not be practical to roughen the surface of silty soils without disturbing the underlying soil.

13.1.1.21 Carefully unfasten the two halves of the split mold and open it.

NOTE 17.–Small amounts of soil may be pulled from the specimen due to adhesion to the liner. Small holes in the specimen may be carefully filled using a knife and small amounts of the soil that adhered to the liner.

13.1.1.22 Determine the wet mass of the compacted specimen and compare it to the calculated wet mass of soil from which the specimen was prepared. If the difference in wet masses is greater than 1.0 percent of the calculated mass, the specimen is either too loose or too dense. Discard the specimen (provided there is sufficient material to do so) and compact a new specimen according to subparagraph 13.1.

NOTE 18.–A difference of 1.0 percent between the calculated and actual specimen wet mass corresponds to approximately 1.0 lbf/ft^3 difference in dry unit weight.

NOTE 19.–Subparagraph 13.1.1.22 is provided only as a quick check to verify that the mass of the compacted specimen is approximately equal to the desired mass.

13.1.1.23 Place a solid plastic end plate on the top of the specimen.

13.1.1.24 Prepare the specimen for determining its initial placement properties as follows.

NOTE 20.–Two methods are presented for determining the initial specimen volume. The preferred method is the "mass-in-air/mass-in-water method;" the "direct" method is presented as an alternative.

13.1.1.24.1 Mass-in-air/mass-in-water:

13.1.1.24.1.1 Place a specimen membrane into the vacuum expander and roll the ends of the membrane over the ends of the expander.

13.1.1.24.1.2 Attach the vacuum line on the expander to a vacuum source and apply a vacuum.

13.1.1.24.1.3 Slide the membrane and expander over the compacted specimen.

13.1.1.24.1.4 Release the vacuum.

13.1.1.24.1.5 Roll the top of the membrane up and over the top of the plastic end plate.

13.1.1.24.1.6 Roll the bottom of the membrane over the compaction mold baseplate.

13.1.1.24.1.7 Remove the membrane expander from the specimen.

13.1.1.24.1.8 Invert the specimen.

13.1.1.24.1.9 Roll the membrane down over the compacted specimen.

13.1.1.24.1.10 Remove the compaction mold baseplate and remove the plastic liner from the bottom of the specimen.

13.1.1.24.1.11 Place the plastic end plate on the bottom of the specimen.

13.1.1.24.1.12 Roll the membrane up onto the plastic end plate.

13.1.1.24.1.13 Place one O-ring on the O-ring expander.

13.1.1.24.1.14 Slide the O-ring expander down over the specimen.

13.1.1.24.1.15 Roll the O-ring off the expander and on to the bottom end plate.

13.1.1.24.1.16 Invert the specimen.

13.1.1.24.1.17 Place one O-ring on the top end plate as described in subparagraphs 13.1.1.24.1.13 through 13.1.1.24.1.15.

13.1.1.24.1.18 Determine the volume and mass of the specimen and calculate initial placement conditions as described in appendix X3 (fig. 17).

13.1.1.24.2 Direct measurement:

13.1.1.24.2.1 Determine the volume and mass of the specimen and calculate initial placement conditions as described in appendix X3.

13.1.1.24.3 Proceed to place the test specimen in the test apparatus as described in the particular USBR designation by which the specimen will be tested.

13.1.1.24.4 Proceed to paragraph 14.

13.1.2 Compacting specimens containing plus No. 4 material.

13.1.2.1 All data are recorded on data sheet 2 (fig. 11).

13.1.2.2 Assemble and fasten the split mold on the compaction baseplate.

13.1.2.3 Place a circular piece of liner in the bottom of the mold and a rectangular piece of liner around the inside perimeter of the mold from the top of the compaction mold to the bottom of the mold.

13.1.2.4 Attach the compaction collar to the top of the mold. Determine and record the depth of each compacted lift as described in subparagraph 13.1.1.5.

13.1.2.5 Place a large dry pan on the scale or balance and tare the mass of the pan.

13.1.2.6 Prepare the mass of soil for a bedding lift (minus No. 4 material only) or a specimen lift (plus and minus No. 4 material) as follows.

13.1.2.6.1 Bedding lift (minus No. 4 material only).–Measure the mass of wet soil required for a bedding lift [as calculated on line (6m) on the back of the form].

13.1.2.6.2 Specimen lift (containing plus and minus No. 4 material):

13.1.2.6.2.1 Remove a wet mass of minus 1-1/2- to plus 3/4-inch material from the soaking pan and place on a dry towel.

13.1.2.6.2.2 Remove excess moisture from the surface of the material by blotting with the towel.

13.1.2.6.2.3 Measure the mass of moist minus 1-1/2- to plus 3/4-inch material required for a specimen lift [as calculated on line (6p)] and place in the pan.

13.1.2.6.2.4 Remove a mass of minus 3/4- to plus 3/8-inch material from the soaking pan and remove excess moisture from the surface by blotting with a dry towel.

13.1.2.6.2.5 Add moist minus 3/4- to plus 3/8-inch material to the pan containing the minus 1-1/2- to plus 3/4-inch material until the cumulative mass of these materials equals the value of cumulative mass calculated on line (6p).

13.1.2.6.2.6 For each of the plus No. 4 sieve size materials, repeat subparagraphs 13.1.2.6.2.4 and 13.1.2.6.2.5.

13.1.2.6.2.7 Measure the mass of wet minus No. 4 material required for a lift as calculated and add it to the plus No. 4 material in the pan.

13.1.2.6.2.8 Thoroughly mix the plus and minus No. 4 materials to obtain a homogeneous mixture and place the mixture in a moisture proof container.

13.1.2.6.2.9 Prepare the required mass of wet plus and minus No. 4 material for the remaining number of specimen lifts as described in subparagraph 13.1.2.6.2.

13.1.2.7 Place and distribute evenly the mass of wet soil for a bedding lift on the bottom of the mold.

13.1.2.8 Set the tamper on the soil and lightly compress the soil. Repeat this until the entire surface of the soil has been compressed.

NOTE 21.–The diameter of the tamper face should be at least 1/2—but less than 3/4—of the diameter of the compaction mold.

13.1.2.9 Compact the soil by tamping with the tamper. Move the tamper around the mold to ensure even distribution of the compactive effort.

13.1.2.10 Measure and record the depth to the surface of the compacted lift as described in subparagraph 13.1.1.10.

13.1.2.11 Scarify the surface of the compacted lift—using a knife or sharp edged instrument—to a depth of approximately one-tenth the depth of the lift.

13.1.2.12 Rotate the split mold approximately 90 degrees.

13.1.2.13 Place and distribute evenly the mass of wet soil for a specimen lift in the mold.

NOTE 22.–Attempt to distribute the coarse gravel (plus 3/4- to minus 1-1/2-in size) approximately 1/2 inch away from the sides of the mold to reduce the potential for rupturing the membrane during the test. Care should be taken to prevent gravel particles from point loading.

13.1.2.14 Set the tamper on the soil and lightly compress the soil. Repeat this until the entire surface of the soil has been compressed.

13.1.2.15 Compact the soil by tamping with the tamper. Move the tamper around the mold to ensure even distribution of the compactive effort.

13.1.2.16 Measure and record the depth to the surface of the compacted lift as described in subparagraph 13.1.1.10.

13.1.2.17 Scarify the surface of the compacted lift—using a knife or sharp edged instrument—to a depth of approximatley one-tenth the depth of the lift.

13.1.2.18 Rotate the split mold approximately 90 degrees.

13.1.2.19 Repeat subparagraphs 13.1.2.13 through 13.1.2.18 until all specimen lifts are place and compacted.

13.1.2.20 Place and compact the last bedding lift as described in subparagraphs 13.1.2.6 through 13.1.2.9.

13.1.2.21 Place the compaction mold plug into the collar and strike firmly with the tamper.

13.1.2.22 Remove the plug and collar from the compaction mold.

13.1.2.23 If the soil extends above the top of the compaction mold, place and center the compaction mold plug or a disc on the top of the specimen, and lightly strike it using the tamper until the plug or disc is seated on the compaction mold.

13.1.2.24 Remove the compaction mold plug or disc.

13.1.2.25 Roughen the surface of the specimen using the teeth of a hacksaw blade by moving the blade slowly back and forth in a sawing motion across the top of the specimen.

13.1.2.26 Carefully unfasten the mold from the compaction mold baseplate.

13.1.2.27 Unfasten the two halves of the split mold and open the mold slightly.

13.1.2.28 Slide the split mold upward along the specimen until the split mold just clears the top surface of the compaction mold baseplate.

13.1.2.29 Close the split mold and refasten the fasteners.

13.1.2.30 Place the split mold lifting cradle onto the split mold.

13.1.2.31 Attach the lifting cradle to a hydraulic lift, and carefully lift the split mold and specimen until the specimen is free of the compaction mold baseplate.

13.1.2.32 Remove the compaction mold baseplate from the compaction baseplate.

13.1.2.33 Place the bottom end plate on the compaction baseplate underneath the split mold and specimen.

NOTE 23.–The mass of the end plate and attached lines in air and in water are obtained from equipment calibration data.

13.1.2.34 Remove the liner from the bottom of the specimen.

13.1.2.35 Carefully lower the split mold and specimen onto the end plate so the specimen is centered on the end plate.

13.1.2.36 Unfasten the split mold and open the mold.

13.1.2.37 Carefully slide the split mold off of the specimen.

13.1.2.38 Remove the liner from the perimeter of the specimen.

13.1.2.39 Prepare the specimen for determining its initial placement properties as follows.

13.1.2.39.1 Mass-in air/mass-in-water:

13.1.2.39.1.1 Place a specimen membrane into the vacuum expander and roll the ends of the membrane over the ends of the expander.

NOTE 24.–If the specimen contains more than about 25-percent gravel, it is suggested that two specimen membranes be placed around the specimen to prevent rupture of the membrane. If the specimen contains more than about 25-percent angular gravel, it is suggested that two membranes separated by a slitted plastic liner be placed around the specimen during compaction and testing.

13.1.2.39.1.2 Attach the vacuum line on the expander to a vacuum source and apply a vacuum.

13.1.2.39.1.3 Slide the membrane and expander over the compacted specimen.

13.1.2.39.1.4 Release the vacuum.

13.1.2.39.1.5 Place a light coating of grease around the perimeter of the bottom end plate.

13.1.2.39.1.6 Roll the bottom of the membrane over the bottom end plate.

13.1.2.39.1.7 Place a blank end plate on top of the specimen.

13.1.2.39.1.8 Roll the top of the membrane up and over the top blank end plate.

13.1.2.39.1.9 Slide the membrane expander from the specimen.

13.1.2.39.1.10 Place two O-rings on the O-ring expander.

13.1.2.39.1.11 Slide the O-ring expander down over the specimen to the bottom end plate.

13.1.2.39.1.12 Roll the O-rings off of the expander and on to the bottom end plate.

13.1.2.39.1.13 Remove the O-ring expander from the specimen and place two O-rings onto the O-ring expander.

13.1.2.39.1.14 Slide the O-ring expander with the O-rings on it down over the specimen.

13.1.2.39.1.15 Roll the top of the membrane down past the blank end plate on the top of the specimen and remove the blank end plate.

13.1.2.39.1.16 Place a light coating of grease around the perimeter of the top end plate.

13.1.2.39.1.17 Place a top end plate on top of the specimen.

13.1.2.39.1.18 Roll the top of the membrane up and over the top end plate.

13.1.2.39.1.19 Roll the O-rings off of the expander and onto the top end plate.

13.1.2.39.1.20 Determine and record the volume and mass of the specimen and calculate initial placement conditions as described in appendix X3 (fig. 17).

13.1.2.39.2 Direct measurement:

13.1.2.39.2.1 Determine and record the volume and mass of the specimen and calculate the specimens initial placement conditions as described in appendix X3.

13.1.2.40 Proceed to paragraph 14.

13.2 *Method B*:

13.2.1 All data required to place the specimen were previously calculated and recorded on lines (7a) through (7k) on data sheet 1 (fig. 13).

13.2.2 Assemble the rigid compaction mold:

13.2.2.1 One-dimensional consolidation mold:

13.2.2.1.1 Place the specimen ring onto the compaction base plate and secure the ring to the baseplate.

13.2.2.1.2 Place a plastic liner in the bottom of the mold.

13.2.2.1.3 Set the collar on the specimen ring and compaction baseplate.

13.2.2.2 Direct shear mold:

13.2.2.2.1 Place the baseplate into the shear box and place a porous plate onto the baseplate.

13.2.3 Place the container, container lid, and wet soil on a scale or balance. The mass should equal that previouly measured and recorded on line (7a). If the mass has changed, cross out the old value and record the new value beside it. Recalculate the mass of the container, container lid, and wet soil left after the mass of wet soil required for one lift is removed (subpar. 9.4.1.9).

13.2.4 Determine the desired depth from the surface of the compaction mold or collar to the surface of each compacted lift as follows.

13.2.4.1 Equal lift thickness:

13.2.4.1.1 Determine the desired depth as described in subparagraph 13.1.1.5.

13.2.4.2 Unequal lift thickness (undercompaction). Determine the desired depth of each compacted lift using the undercompaction technique proposed by R.S. Ladd [1].

13.2.5 Remove the mass of wet soil from the container which is required for a single lift, place and compact the lift, and measure the depth to the surface of each compacted lift as described in subparagraphs 13.1.1.6 through 13.1.1.15.

13.2.6 Repeat subparagraph 13.2.5 until the entire specimen has been placed.

13.2.7 Determine the placement dry unit weight of the specimen as follows.

13.2.7.1 One-dimensional consolidation mold:

13.2.7.1.1 Remove the compaction collar. Level the top surface of the specimen using a straight edge or hacksaw blade.

13.1.7.1.2 Determine initial placement properties as described in appendix X3 by the direct measurement method. Record the results on the "Compacted Specimen Placement Data Sheet" (fig. 18).

13.2.7.2 Direct shear mold:

13.2.7.2.1 Determine if the final compacted height of the specimen meets desired height (subpar. 13.1.10).

13.2.7.2.2 Determine initial placement properties as described in appendix X3 by the direct measurement methods using the wet mass and moisture content with which the specimen was prepared and the volume of the rigid mold determined on data sheet 1 (fig. 13).

13.2.8 Roughen the top surface of the specimen using the teeth of a hacksaw blade by moving the blade slowly back and forth across the top of the specimen using a sawing motion, or using a knife or sharp instrument.

NOTE 25.–Roughening the surface of the specimen improves bonding between the soil and porous plate used in the direct shear test and removes any surface smearing that could inhibit movement of water through the porous plate in the direct shear, one-dimensional consolidation, expansion, and uplift tests.

13.2.9 Proceed to paragraph 14.

13.3 *Method C*:

If the specimen contains plus No. 4 material proceed to subparagraph 13.3.2, otherwise continue with subparagraph 13.3.1.

13.3.1 Compacting specimens consisting of minus No. 4 material.

13.3.1.1 All data required to place the specimen were previously calculated and recorded on lines (7a) through (7k) on data sheet 1 (fig. 14).

13.3.1.2 Prepare the test system as described in the Preparation of Apparatus paragraph of the particular USBR designation being performed.

NOTE 26.–The end plate porous inserts should be dry for most cohesionless soils being tested.

13.3.1.3 Place a calibration specimen on the bottom end plate.

13.3.1.4 Place the top end plate on top of the calibration specimen.

13.3.1.5 Determine the reference height of the calibration specimen as follows.

13.3.1.5.1 All data are to be recorded on the back of the form entitled "Compacted Specimen Placement Data Sheet" (fig. 19).

13.3.1.5.2 Affix a deformation indicator clamp on the test assembly tie down rod, or position a deformation indicator reference stand adjacent to the test assembly.

13.3.1.5.3 Attach a deformation indicator to the clamp or reference stand and position the stem of the indicator in the insert for the loading piston in the top end plate.

13.3.1.5.4 Record the predetermined height of the calibration specimen to the nearest 0.001 inch on line (15a). Record the dial guage reading of the calibration specimen and top end plate to the nearest 0.001 inch on line (15b) on the back of the "Compacted Specimen Placement Data Sheet" (fig. 19).

13.3.1.5.5 Rotate the deformation indicator away from the top end plate; remove the top end plate and calibration specimen from the bottom end plate.

13.3.1.5.6 Apply a light coat of grease to the perimeter of the bottom end plate or platen.

13.3.1.5.7 Place a membrane over the bottom end plate.

13.3.1.5.8 Place two O-rings over the membrane to secure the membrane to the end plate.

13.3.1.5.9 Place the two halves of the stand-up vacuum split mold over the bottom end plate, membrane, and O-rings, and close and fasten the mold.

13.3.1.5.10 Lift the membrane out of the mold and stretch the membrane up and over the top of the split mold; remove any wrinkles in the membrane.

13.3.1.5.11 Roll the top of the membrane down over the top of the split mold.

13.3.1.5.12 Place two O-rings over the membrane to secure the membrane to the outside of the mold.

13.3.1.5.13 Attach the vacuum source supply line to the split mold vacuum supply tube.

13.3.1.5.14 Apply a vacuum of approximately 15 to 20 inches of mercury to the split mold to pull the membrane to the inside wall of the split mold.

NOTE 27.–If wrinkles are present, repeat subparagraphs 13.3.1.5.11 through 13.3.1.5.14 until wrinkles are not present. If the membrane does not draw up and conform to the inside of the mold, the membrane may have a leak. Replace the membrane, if necessary, and go to subparagraph 13.3.1.5.7.

13.3.1.6 Place the container, container lid, and wet soil on a scale or balance. The mass should equal that previously measured and recorded on line (7a). If the mass has changed, cross out the old value and record the new value. Recalculate the mass of the container, container lid, and wet soil left after the mass for one lift is removed (subpar. 9.4.1.9).

13.3.1.7 Determine the depth to each compacted lift as described in subparagraph 13.1.1.5., or subparagraph 13.2.4.2.1 if undercompaction is desired.

13.3.1.8 Remove the mass of wet soil required for a lift; place, spread, and compact the lift, and measure and record the thickness of the compacted lift for each lift as described in subparagraphs 13.1.1.6 through 13.1.1.15. Repeat subparagraph 13.3.1.8 until all specified lifts have been compacted.

13.3.1.9 Apply a light coat of grease to the perimeter of the top end plate and place it on top of the compacted specimen.

13.3.1.10 Roll the membrane up over the top end plate.

13.3.1.11 Place two O-rings on the top end plate to secure the membrane.

13.3.1.12 Apply a 2 to 3 lbf/in^2 vacuum to the specimen through the bottom end plate.

13.3.1.13 Release the vacuum applied to the split mold.

13.3.1.14 Carefully separate the split mold and remove it from the specimen.

13.3.1.15 Determine the height of the compacted specimen as follows.

13.3.1.15.1 All data are recorded on the back of the form entitled "Compacted Specimen Placement Data Sheet" (fig. 19).

13.3.1.15.2 Reattach the deformation indicator to the dial gauge clamp and position the stem in the insert for the loading piston in the top end plate.

13.3.1.15.3 Record the deformation indicator reading to 0.001 inch on line (15c).

13.3.1.15.4 Calculate the dial gauge difference as shown on the form.

NOTE 28.–The example calculation shows the dial gauge reading increasing with compression of the specimen. If the dial gauge reading decreases, with compression of the specimen, the gauge difference equals (15c) minus (15b). Check this on the form.

13.3.1.16 Calculate and record the initial height of the specimen on line (15e). Record the value on line (15) on the front of the form.

13.3.1.17 Determine the average diameter of the specimen as follows.

13.3.1.17.1 Measure the diameter of the specimen with membrane to 0.001 inch using a pi (π) tape at 3 equally spaced locations along the axis of the specimen and record the values on lines (14a), (14b), and (14c).

13.3.1.17.2 Calculate the average diameter and record the value to 0.001 inch on line (14d).

13.3.1.17.3 Obtain the thickness of the specimen membrane, double the thickness and record to 0.001 inch on line (14e).

13.3.1.17.4 Calculate the average diameter of the specimen and record the value on line (14f) and line (14) on the front of the form.

13.3.1.18 Calculate initial placement conditions as described in appendix X3 using the mass of wet material placed in the specimen, material moisture content, and specimen dimensions as determined by the direct measurement method.

13.3.1.19 Proceed to paragraph 14.

13.3.2 Compacting specimens containing plus No. 4 material.

13.3.2.1 Prepare the test system assembly as described in the Preparation of Apparatus paragraph of the particular USBR designation being performed.

13.3.2.2 Determine the reference height of the calibration specimen as described in subparagraph 13.3.1.5.

13.3.2.3 Apply a light coat of grease to the perimeter of the bottom end plate.

13.3.2.4 Place four small holes, two each on diametrically opposed sides of one of the membranes, and mark the location of each hole with a marking pen.

13.3.2.5 Insert another membrane inside the membrane with the holes.

13.3.2.6 Place the two membranes over the bottom end plate.

13.3.2.7 Prepare the membrane and mold for compacting the specimen, compact the specimen, and seal the specimen as described in subparagraphs 13.3.1.9 through 13.3.1.19.

13.3.2.8 Seal the holes in the outer membrane with rubber cement and tire patch.

13.3.2.9 Determine the average diameter of the specimen as described in subparagraph 13.3.1.17.

13.3.2.10 Determine the height of the compacted specimen as described in subparagraph 13.3.1.5.

13.3.2.11 Calculate initial placement conditions as described in appendix X3; record the data as shown on figure 19.

13.3.2.12 Proceed to paragraph 14.

13.4 *Method D*:

13.4.1 The mass of dry minus No. 4 material required for placing a specimen was previously calculated and recorded on line (6a) on data sheet 1 (fig. 15).

13.4.2 Prepare the rigid compaction mold as described in subparagraph 13.2.2.

13.4.3 Determine the desired depth from the surface of the compaction collar to the surface of the compacted lift as described in subparagraph 13.1.1.5 and record the values to 0.001 inch (fig. 15).

NOTE 29.–For this method, use $n = 1$ (n equals the number of lifts) and T_l is equal to the total desired height of the specimen.

13.4.4 Compact the specimen.

13.4.4.1 Pouring and/or sifting technique:

13.4.4.1.1 Place the pouring tube or sifting screen in the bottom of the mold.

13.4.4.1.2 Remove the mass of dry minus No. 4 material required for one specimen from the container of material previously prepared in subparagraph 9.7 and as recorded on line (6a).

13.4.4.1.3 To minimize segregation and loss of fines, slowly pour the entire mass of soil into the pouring tube or into the compaction mold on top of the sifting screen.

13.4.4.1.4 Carefully and slowly, with a steady motion, raise the pouring tube or sifting screen and deposit the material in the mold. If necessary, simultaneously strike the side of the mold with light blows of a brass mallet to increase the dry unit weight of the specimen.

13.4.4.1.5 Continue placing the material until the pouring tube is empty or the sifting screen emerges from the specimen and mold.

13.4.4.1.6 Evaluate the compactness of the specimen. If the specimen does not reach the desired height, it is too compact. Remove the specimen from the mold and repeat subparagraphs 13.4.4.1.1 through 13.4.4.1.5, and decrease the amount of compaction. If the specimen exceeds the desired height, the specimen is too loose. Remove the specimen from the mold and repeat subparagraphs 13.4.4.1.1 through 13.4.4.1.5 and increase the amount of compaction.

NOTE 30.– The compaction may be decreased by raising the pouring tube or sifting screen through the specimen more slowly and not striking the mold. The compaction may be increased by striking the mold more frequently and/or harder.

13.4.4.1.7 Calculate initial placement properties (fig. 20) as described in appendix X3 by the direct measurement method using the dry mass with which the specimen was prepared and the volume of the rigid mold determined in subparagraph 9.7.1 and shown on line (4m) on data sheet 1 (fig. 14).

13.4.5 Proceed to paragraph 14.

13.5 *Method E*:

13.5.1 The mass of dry minus No. 4 material required for placing a specimen was previously calculated and recorded on line (6a) on data sheet 1 (fig. 16).

13.5.2 Prepare the stand-up vacuum compaction mold as described in subparagraphs 13.3.1.2 through 13.3.1.5 and record initial data on the "Compacted Specimen Placement Data Sheet" (fig. 21).

NOTE 31.–For this method, use $n = 1$ (n equals the number of lifts) and T_l is equal to the total desired height of the specimen.

13.5.3 Place and compact the specimen.

13.5.3.1 Pouring and sifting technique:

13.5.3.1.1 Place the pouring tube or sifting screen in the bottom of the compaction mold.

13.5.3.1.2 Remove the mass of dry minus No. 4 material required for one specimen from the material prepared in subparagraph 9.7.

13.5.3.1.3 To minimize segregation and the loss of fines, slowly place the entire mass of dry soil into the pouring tube or into the compaction mold on top of the sifting screen.

13.5.3.1.4 Carefully and slowly, with a steady motion, raise the pouring tube or sifting screen and compact the specimen, as described in subparagraphs 13.4.4.1.4 through 13.4.4.1.6.

13.5.3.1.5 Assemble the top end plate, apply vacuum to the specimen and determine the initial specimen height and diameter as described in subparagraphs 13.3.1.9 through 13.3.1.17 as shown on the back of the form (fig. 19).

13.5.3.1.6 Calculate initial placement properties (fig. 21) as described in appendix X3 by the direct measurement method using the dry mass from which the specimen was prepared (refer to subpar. 9.3) and the calculated volume of the specimen.

14. Calculations

14.1 Required calculations for method A are performed in subparagraphs 9.1 and 9.2, and subparagraph 13.1.

14.2 Required calculations for method B are performed in subparagraphs 9.1 and 9.5, and subparagraph 13.2 (which refers to subpars. 9.1.1 through 9.9.4).

14.3 All required calculations for method C are performed in subpargraphs 9.1 and 9.6, and subpargraph 13.3.

14.4 All required calculations for method D are performed in subparagraphs 9.1 and 9.5, and subparagraph 13.2 (which refers to subpars. 9.1.1 through 9.4).

14.5 All required calculations for method E are performed in subparagraphs 9.1 and 9.5, and subparagraph 13.2 (which refers to subpars. 9.1.1 through 9.4).

15. Report

15.1 The report for methods A through E is to consist of the following completed and checked forms, as required:

"Compaction Data for Specimens (minus No. 4 material) — Data Sheet 1" (figs. 10, 13, 14, 15, 16).

"Compaction Data for Specimens (plus and minus No. 4 material) — Data Sheet 2" (fig. 11).

"Added Water Determination" (fig. X2.1).

"Compacted Specimen Placement Data Sheet" (figs. 17, 18, 19, 20. 21).

16. References

[1] Ladd, R.S., "Preparing Test Specimen Using Undercompacting," *Geotechnical Testing Journal*, vol. 1, No. 1, pp. 16-23, March 1978.

[2] Mulilis, J.P., H.B. Seed, and C.K. Chan, "Effects of Sample Preparation on Sand Liquefacation," *Journal of the Geotechnical Engineering Division*, ASCE, vol. 103, No. G72, pp. 91-108, February 1977.

[3] Nemat-Nasser, S. and Y. Tobita, "Influence of Fabric on Liquefaction and Densification Potential of Cohesionless Sand," *Mechanics of Materials*, pp. 43-62, May 1981.

[4] Finn, W.D.L., D.J. Pichering, and P.L. Bransby, "Sand Liquefaction in Triaxial and Simple Shear Tests." *Journal of the Soil Mechanics and Foundations Division*, ASCE, vol 97, No. 5M4, April, 1971.

16.1 *Background References*

Fedors, R.F., "A Relationship Between Maximum Packing of Particles and Particle Size," *Powder Technology*, 22, pp. 71-76, 1979.

Ladd, R.S. "Specimen Preparation and Liquefaction of Sands," *Journal of the Geotechnical Engineering Division*, ASCE, vol. 100, No. GT10, October, 1974.

Lee, K.L., and J.A. Fitton, "Factors Affecting the Dynamic Strength of Soil," *Vibration Effects on Soils and Foundations*, ASTM, STP 450, 1969.

7-2388 (12-86)
Bureau of Reclamation

COMPACTION DATA FOR SPECIMENS OF MINUS NO. 4 MATERIAL (DATA SHEET 1)

Designation USBR 5210-89

PROJECT: Example | FEATURE: Example

COMPUTED BY | DATE | CHECKED BY | DATE

1. SAMPLE NO. 100B-1
2. COMPACTION METHOD: [X] TAMPING COMPACTION [ ] POURING WITH VIBRATION
3. TEST DESIGNATIONS: USBR 5725-Direct Shear

4. COMPACTION MOLD SYSTEM: [ ] SPLIT MOLD [X] RIGID MOLD [ ] STAND-UP VACUUM MOLD NO. _____
   - 4a. [ ] CIRCULAR MOLD _____
   - 4b. DIAMETER _____ (in) 4c. HEIGHT _____ (in)
   - 4d. LINER THICKNESS _____ (in)
   - 4e. AREA = 0.7854[a/] [(4b) - 2 x (4d)]^2 _____ (in^2)
   - 4f. VOLUME = [(4c) - (4d)] x (4e) _____ (in^3)
   - 4g. [X] SQUARE MOLD
   - 4h. LENGTH 1 2.000 (in) 4i. LENGTH 2 2.000 (in)
   - 4j. HEIGHT 1.000 (in) 4k. LINER THICKNESS — (in)
   - 4L. AREA = [(4h) - (2 x (4k))] [(4i) - (2 x (4k))] 4.000 (in^2)
   - 4m. VOLUME = [(4j) - (4k)] (4L) 4.000 (in^3)

5. PLACEMENT CONDITIONS
   - 5a. DESIRED DRY UNIT WEIGHT 110.0 (lbf/ft^3)
   - 5b. PERCENTAGE OF LABORATORY CONTROL TEST [X] % Comp [ ] % RD 100.0
   - 5c. DESIRED MOISTURE CONTENT 16.8 (%)
   - 5d. SPECIFIC GRAVITY 2.70

6. COMPACTION DATA
   - 6a. MASS OF DRY SOIL PER SPECIMEN = (5a)(4f or 4m)(5.787×10^{-4})[b/] 0.255 (lbm)
   - 6b. NUMBER OF SPECIMENS PER TEST 1
   - 6c. MASS OF DRY SOIL PER TEST = (6a) (6b) [1.05 or 2.0][c/] 0.510 (lbm)
   - 6d. COMPACTION — MOISTURE CONTENT 16.5 (%)
   - 6e. NUMBER OF LIFTS PER SPECIMEN 3
   - 6f. MASS OF WET SOIL PER LIFT = $\frac{(6a)}{(6e)}\left[1 + \frac{(6d)}{100}\right]$[d/] 0.099 (lbm)
   - 6g. MASS OF WET SOIL PER LIFT = 453.6[e/] (6f) 44.9 (g)

7.

		LIFT NO.	MASS OF WET SOIL PLUS CONTAINER [ ]lbm [X]g			LIFT NO.	MASS OF WET SOIL PLUS CONTAINER [ ]lbm [X]g
7a.			388.3				
7b.	(7a) - (6g)	1	343.4	7g.	(7f) - (6g)	6	
7c.	(7b) - (6g)	2	298.5	7h.	(7g) - (6g)	7	
7d.	(7c) - (6g)	3	253.6= Container mass	7i.	(7h) - (6g)	8	
7e.	(7d) - (6g)	4		7j.	(7i) - (6g)	9	
7f.	(7e) - (6g)	5		7k.	(7j) - (6g)	10	

a/ CONSTANT = $\pi/4$

b/ CONSTANT = $\frac{1 ft^3}{1728 in^3} \cdot \frac{1 lbm}{1 lbf}$

c/ CONSTANT = FACTOR TO PROVIDE EXCESS MATERIAL FOR MOISTURE CONTENT DETERMINATION
= 1.05 FOR LARGE SPECIMENS AND 2.0 FOR SMALL SPECIMENS

d/ CONSTANT = $\frac{100\%}{1.0}$

e/ CONSTANT = $\frac{453.6g}{1 lbm}$

Figure 13.–Compaction data for specimens of minus No. 4 material (data sheet 1) — method B example.

7-2388 (12-86)
Bureau of Reclamation

COMPACTION DATA FOR SPECIMENS OF MINUS NO. 4 MATERIAL (DATA SHEET 1)

Designation USBR 5210-89

PROJECT	FEATURE
Example	Example
COMPUTED BY / DATE	CHECKED BY / DATE

1. SAMPLE NO. 100C-1
2. COMPACTION METHOD: ☒ TAMPING COMPACTION ☐ POURING WITH VIBRATION
3. TEST DESIGNATIONS: USBR 5745-UU Triaxial Shear Test

4. COMPACTION MOLD SYSTEM: ☐ SPLIT MOLD ☐ RIGID MOLD ☒ STAND-UP VACUUM MOLD NO. _____
   - 4a. ☒ CIRCULAR MOLD
   - 4b. DIAMETER 2.000 (in) 4c. HEIGHT 5.000 (in)
   - 4d. LINER THICKNESS ——— (in)
   - 4e. AREA = 0.7854[a/] [(4b) - 2 x (4d)]^2 3.142 (in^2)
   - 4f. VOLUME = [(4c) - (4d)] x (4e) 15.710 (in^3)
   - 4g. ☐ SQUARE MOLD
   - 4h. LENGTH 1 _____ (in) 4i. LENGTH 2 _____ (in)
   - 4j. HEIGHT _____ (in) 4k. LINER THICKNESS _____ (in)
   - 4L. AREA = [(4h) - (2 x (4k))] [(4i) - (2 x (4k))] _____ (in^2)
   - 4m. VOLUME = [(4j) - (4k)] (4L) _____ (in^3)

5. PLACEMENT CONDITIONS
   - 5a. DESIRED DRY UNIT WEIGHT 115.0 (lbf/ft^3)
   - 5b. PERCENTAGE OF LABORATORY CONTROL TEST ☐ % Comp ☐ % RD 95.0
   - 5c. DESIRED MOISTURE CONTENT 9.9 (%)
   - 5d. SPECIFIC GRAVITY 2.65

6. COMPACTION DATA
   - 6a. MASS OF DRY SOIL PER SPECIMEN = (5a)(4f or 4m)(5.787 x 10^{-4})[b/] 1.046 (lbm)
   - 6b. NUMBER OF SPECIMENS PER TEST 3
   - 6c. MASS OF DRY SOIL PER TEST = (6a) (6b) [1.05 or 2.0][c/] 6.276 (lbm)
   - 6d. COMPACTION — MOISTURE CONTENT 9.7 (%)
   - 6e. NUMBER OF LIFTS PER SPECIMEN 10
   - 6f. MASS OF WET SOIL PER LIFT = $\frac{(6a)}{(6e)}\left[1 + \frac{(6d)}{100}\right]$[d/] 0.115 (lbm)
   - 6g. MASS OF WET SOIL PER LIFT = 453.6[e/] (6f) 52.2 (g)

7.

		LIFT NO.	MASS OF WET SOIL PLUS CONTAINER ☐ lbm ☒ g			LIFT NO.	MASS OF WET SOIL PLUS CONTAINER ☐ lbm ☒ g
7a.			946.5				
7b.	(7a) - (6g)	1	894.3	7g.	(7f) - (6g)	6	633.3
7c.	(7b) - (6g)	2	842.1	7h.	(7g) - (6g)	7	581.1
7d.	(7c) - (6g)	3	789.9	7i.	(7h) - (6g)	8	528.9
7e.	(7d) - (6g)	4	737.7	7j.	(7i) - (6g)	9	476.7
7f.	(7e) - (6g)	5	685.5	7k.	(7j) - (6g)	10	424.5 - Container mass

a/ CONSTANT = $\pi/4$

b/ CONSTANT = $\frac{1 ft^3}{1728 in^3} \cdot \frac{1 lbm}{1 lbf}$

c/ CONSTANT = FACTOR TO PROVIDE EXCESS MATERIAL FOR MOISTURE CONTENT DETERMINATION
= 1.05 FOR LARGE SPECIMENS AND 2.0 FOR SMALL SPECIMENS

d/ CONSTANT = $\frac{100\%}{1.0}$

e/ CONSTANT = $\frac{453.6 g}{1 lbm}$

Figure 14.–Compaction data for specimens of minus No. 4 material (data sheet 1) — method C example.

7-2388 (12-86)
Bureau of Reclamation

COMPACTION DATA FOR SPECIMENS OF MINUS NO. 4 MATERIAL (DATA SHEET 1)

Designation USBR 5210-89

PROJECT: Example
FEATURE: Example
COMPUTED BY: DATE:
CHECKED BY: DATE:

1. SAMPLE NO. 100D-1
2. COMPACTION METHOD: ☐ TAMPING COMPACTION ☒ POURING WITH VIBRATION
3. TEST DESIGNATIONS: USBR 5725 Direct Shear Test

4. COMPACTION MOLD SYSTEM: ☐ SPLIT MOLD ☒ RIGID MOLD ☐ STAND-UP VACUUM MOLD NO. _____
   - 4a. ☐ CIRCULAR MOLD _____
   - 4b. DIAMETER _____ (in) 4c. HEIGHT _____ (in)
   - 4d. LINER THICKNESS _____ (in)
   - 4e. AREA = 0.7854[a/] [(4b) - 2 x (4d)]^2 _____ (in^2)
   - 4f. VOLUME = [(4c) - (4d)] x (4e) _____ (in^3)
   - 4g. ☐ SQUARE MOLD
   - 4h. LENGTH 1 2.001 (in) 4i. LENGTH 2 2.000 (in)
   - 4j. HEIGHT 1.000 (in) 4k. LINER THICKNESS — (in)
   - 4L. AREA = [(4h) - (2 x (4k))] [(4i) - (2 x (4k))] 4.002 (in^2)
   - 4m. VOLUME = [(4j) - (4k)] (4L) 4.002 (in^3)

5. PLACEMENT CONDITIONS
   - 5a. DESIRED DRY UNIT WEIGHT 100.0 (lbf/ft^3)
   - 5b. PERCENTAGE OF LABORATORY CONTROL TEST ☐ % Comp ☒ % RD 70.0
   - 5c. DESIRED MOISTURE CONTENT ≈0 (%)
   - 5d. SPECIFIC GRAVITY 2.60

6. COMPACTION DATA
   - 6a. MASS OF DRY SOIL PER SPECIMEN = (5a)(4f or 4m)(5.787 x 10^{-4})[b/] 0.232 (lbm)
   - 6b. NUMBER OF SPECIMENS PER TEST 1
   - 6c. MASS OF DRY SOIL PER TEST = (6a) (6b) [1.05 or 2.0][c/] 0.464 (lbm)
   - 6d. COMPACTION — MOISTURE CONTENT ≈0 (%)
   - 6e. NUMBER OF LIFTS PER SPECIMEN 1
   - 6f. MASS OF WET SOIL PER LIFT = $\frac{(6a)}{(6e)}\left[1 + \frac{(6d)}{100}\right]$[d/] 0.232 (lbm)
   - 6g. MASS OF WET SOIL PER LIFT = 453.6[e/] (6f) 105.2 (g)

7.

		LIFT NO.	MASS OF WET SOIL PLUS CONTAINER ☐lbm ☐g			LIFT NO.	MASS OF WET SOIL PLUS CONTAINER ☐lbm ☐g
7a.							
7b.	(7a) - (6g)	1		7g.	(7f) - (6g)	6	
7c.	(7b) - (6g)	2		7h.	(7g) - (6g)	7	
7d.	(7c) - (6g)	3		7i.	(7h) - (6g)	8	
7e.	(7d) - (6g)	4		7j.	(7i) - (6g)	9	
7f.	(7e) - (6g)	5		7k.	(7j) - (6g)	10	

a/ CONSTANT = $\pi/4$

b/ CONSTANT = $\frac{1 ft^3}{1728 in^3} \cdot \frac{1 lbm}{1 lbf}$

c/ CONSTANT = FACTOR TO PROVIDE EXCESS MATERIAL FOR MOISTURE CONTENT DETERMINATION
= 1.05 FOR LARGE SPECIMENS AND 2.0 FOR SMALL SPECIMENS

d/ CONSTANT = $\frac{100\%}{1.0}$

e/ CONSTANT = $\frac{453.6g}{1 lbm}$

Figure 15.–Compaction data for specimens of minus No. 4 material (data sheet 1) — method D example.

COMPACTION LIFT DATA

8. DEPTH TO BOTTOM OF MOLD (from top of collar) 1.510 (in)

9. DESIRED LIFT THICKNESS 0.510 (in) _____ (in)

10. LIFT HEIGHT MEASUREMENT DATA:

	1	2	3	4	5	6	7	8	9	10
10a. LIFT NUMBER										
10b. DESIRED DEPTH TO LIFT (8) - (10a)(9)	0.510									
10c. DEPTH 1	0.560									
10d. DEPTH 2	0.500									
10e. DEPTH 3	0.530									
10f. AVERAGE DEPTH $\frac{(10c)+(10d)+(10e)}{3}$	0.530									

Figure 15.-Compaction data for specimens of minus No. 4 material (data sheet 1) — method D example — (back of form) — Continued.

7-2388 (12-86) Bureau of Reclamation	COMPACTION DATA FOR SPECIMENS OF MINUS NO. 4 MATERIAL (DATA SHEET 1)	Designation USBR 5210-89
PROJECT: Example	FEATURE: Example	
COMPUTED BY / DATE	CHECKED BY / DATE	

1. SAMPLE NO. 100E-1
2. COMPACTION METHOD: ☐ TAMPING COMPACTION ☒ POURING WITH VIBRATION
3. TEST DESIGNATIONS: USBR 5745-UU Triaxial Shear Test

4. COMPACTION MOLD SYSTEM: ☐ SPLIT MOLD ☐ RIGID MOLD ☒ STAND-UP VACUUM MOLD NO. _____
   - 4a. ☒ CIRCULAR MOLD
   - 4b. DIAMETER 2.000 (in) 4c. HEIGHT 5.000 (in)
   - 4d. LINER THICKNESS 0.025 (in)
   - 4e. AREA = 0.7854[a/] [(4b) - 2 x (4d)]^2 2.986 (in^2)
   - 4f. VOLUME = [(4c) - (4d)] x (4e) 14.855 (in^3)
   - 4g. ☐ SQUARE MOLD
   - 4h. LENGTH 1 _____ (in) 4i. LENGTH 2 _____ (in)
   - 4j. HEIGHT _____ (in) 4k. LINER THICKNESS _____ (in)
   - 4L. AREA = [(4h) - (2 x (4k))] [(4i) - (2 x (4k))] _____ (in^2)
   - 4m. VOLUME = [(4j) - (4k)] (4L) _____ (in^3)

5. PLACEMENT CONDITIONS
   - 5a. DESIRED DRY UNIT WEIGHT 90.0 (lbf/ft^3)
   - 5b. PERCENTAGE OF LABORATORY CONTROL TEST ☐ % Comp ☒ % RD 60.0
   - 5c. DESIRED MOISTURE CONTENT =0 (%)
   - 5d. SPECIFIC GRAVITY 2.60

6. COMPACTION DATA
   - 6a. MASS OF DRY SOIL PER SPECIMEN = (5a)(4f or 4m)(5.787×10^{-4})[b/] 0.774 (lbm)
   - 6b. NUMBER OF SPECIMENS PER TEST 4
   - 6c. MASS OF DRY SOIL PER TEST = (6a) (6b) [1.05 or 2.0][c/] 6.192 (lbm)
   - 6d. COMPACTION — MOISTURE CONTENT =0 (%)
   - 6e. NUMBER OF LIFTS PER SPECIMEN 1
   - 6f. MASS OF WET SOIL PER LIFT = $\frac{(6a)}{(6e)}\left[1 + \frac{(6d)}{100}\right]$[d/] 0.774 (lbm)
   - 6g. MASS OF WET SOIL PER LIFT = 453.6[e/] (6f) 337.5 (g)

7.

		LIFT NO.	MASS OF WET SOIL PLUS CONTAINER ☐lbm ☐g			LIFT NO.	MASS OF WET SOIL PLUS CONTAINER ☐lbm ☐g
7a.							
7b.	(7a) - (6g)	1		7g.	(7f) - (6g)	6	
7c.	(7b) - (6g)	2		7h.	(7g) - (6g)	7	
7d.	(7c) - (6g)	3		7i.	(7h) - (6g)	8	
7e.	(7d) - (6g)	4		7j.	(7i) - (6g)	9	
7f.	(7e) - (6g)	5		7k.	(7j) - (6g)	10	

a/ CONSTANT = $\pi/4$

b/ CONSTANT = $\frac{1 ft^3}{1728 in^3} \cdot \frac{1 lbm}{1 lbf}$

c/ CONSTANT = FACTOR TO PROVIDE EXCESS MATERIAL FOR MOISTURE CONTENT DETERMINATION
= 1.05 FOR LARGE SPECIMENS AND 2.0 FOR SMALL SPECIMENS

d/ CONSTANT = $\frac{100\%}{1.0}$

e/ CONSTANT = $\frac{453.6 g}{1 lbm}$

Figure 16.–Compaction data for specimens of minus No. 4 material (data sheet 1) — method E example.

7-2390 (12-86) Bureau of Reclamation	COMPACTED SPECIMEN PLACEMENT DATA SHEET	Designation USBR 5210-89
PROJECT: Example	FEATURE: Example	
COMPUTED BY / DATE	CHECKED BY / DATE	

1. SAMPLE NO.		100F-2			
2. SPECIMEN NO.		21			
3. MASS OF WET SPECIMEN + CONTAINER IN AIR	☒ lbm ☐ g	139.99			
4. MASS OF CONTAINER IN AIR	☒ lbm ☐ g	26.54			
5. MASS OF WET SPECIMEN IN AIR = (3) - (4)	☒ lbm ☐ g	113.45			
5a. MASS OF WET SPECIMEN = 0.002205[a] (5)	(lbm)	———			
6. MOISTURE CONTENT	(%)	5.2			
7. MASS OF DRY SPECIMEN IN AIR = $\frac{(5a) \text{ or } (5)}{1 + 0.01[b] (6)}$	(lbm)	107.84			
8. MASS OF WET SPECIMEN + CONTAINER IN WATER	☒ lbm ☐ g	81.93			
9. MASS DIFFERENCE OF WET SPECIMEN + CONTAINER IN AIR AND WATER (3) - (8)	☒ lbm ☐ g	58.06			
10. MASS DIFFERENCE OF CONTAINER	☒ lbm ☐ g	6.70			
11. MASS DIFFERENCE OF SPECIMEN = (9) - (10)	☒ lbm ☐ g	51.36			
11a. MASS DIFFERENCE OF SPECIMEN = 0.002205 x (11)	lbm	———			
12. SPECIMEN VOLUME = 27.741[c] (11a) or (11)	in^3	1424.78			
13a. DIAMETER 1	in				
13b. DIAMETER 2	in				
13c. DIAMETER 3	in				
14. AVERAGE DIAMETER = [(13a)+(13b)+(13c)]/3	in				
15. SPECIMEN LENGTH	in				
16. SPECIMEN VOLUME = 0.7854[d] $(14)^2$ (15)	in^3				
17. MOISTURE CONTENT	(%)	5.2			
18. DRY UNIT WEIGHT = $\frac{1728[e] (7)}{(12) \text{ or } (16)}$	(lbf/ft^3)	130.8			
19. SPECIFIC GRAVITY		2.55			
20. ABSOLUTE DRY UNIT WEIGHT = 62.43[f] (19)	(lbf/ft^3)	159.2			
21. SOIL VOLUME = 100[g] $\frac{(18)}{(20)}$	(%)	82.2			
22. WATER VOLUME = $\frac{(18)\ (17)}{62.29[h]}$	(%)	10.9			
23. FREE AIR VOLUME = 100[i] - (21) - (22)	(%)	6.9			
24. VOID RATIO = $\frac{100[i]}{(21)}$ - 1		0.216			
25. DEGREE OF SATURATION = $\frac{(100[g])\ (22)}{(100[i] - (21)}$	(%)	61.2			

a/ CONSTANT = $(\frac{1 \text{ lbm}}{453.6 \text{ g}})$

b/ CONSTANT = $(\frac{1.0}{100\%})$

c/ CONSTANT = $(\frac{1 \text{ ft}^3}{62.29 \text{ lbm}})(\frac{1728 \text{ in}^3}{1 \text{ ft}^3})$

d/ CONSTANT = $\frac{\pi}{4}$

e/ CONSTANT = $(\frac{1728 \text{ in}^3}{1 \text{ ft}^3})(\frac{1 \text{ lbf}}{1 \text{ lbm}})$

f/ CONSTANT = UNIT WEIGHT OF WATER AT 4 °C

g/ CONSTANT = $(\frac{100\%}{1.0})$

h/ CONSTANT = UNIT WEIGHT OF WATER AT 22 °C

i/ CONSTANT = UNITY, EXPRESSED AS PERCENT

Figure 17.–Compaction specimen placement data sheet — example.

14a. DIAMETER 1 _____ (in)
14b. DIAMETER 2 _____ (in)
14c. DIAMETER 3 _____ (in)
14d. AVERAGE DIAMETER [(14a) + (14b) + (14c)]/3 _____ (in)
14e. MEMBRANE DOUBLE THICKNESS _____ (in)
14f. SPECIMEN DIAMETER (14d) - (14f) _____ (in)

15a. HEIGHT OF CALIBRATION SPECIMEN _____ (in)
15b. CALIBRATION SPECIMEN DIAL GAUGE READING _____ (in)
15c. SOIL SPECIMEN DIAL GAUGE READING _____ (in)
15d. DIAL GAUGE DIFFERENCE (15b) - (15c) 1/ _____ (in)
15e. INITIAL SOIL SPECIMEN HEIGHT (15a) + (15d) _____ (in)

1/ ☐ DIAL GUAGE READING INCREASES WITH SPECIMEN COMPRESSION
☐ DIAL GUAGE READING DECREASES WITH SPECIMEN COMPRESSION (15c) - (15b)

UNITS ☐ g ☐ kg ☐ lbm

	PARTS	MASS - SPECIMEN 1			PARTS	MASS - SPECIMEN 2			PARTS	MASS - SPECIMEN 3		
		AIR	WATER	LOSS		AIR	WATER	LOSS		AIR	WATER	LOSS
CARRIAGE NO.	G	12.24	9.22	3.02								
MEMBRANE NO.	D-11	3.60	3.24	0.36								
TOP AND BOTTOM PLASTIC PLATE	F-12	10.58	7.28	3.30								
2 'o' RINGS	—	0.20	0.18	0.02								
MISC.	—	—	—	—								
	—	—	—	—								
TOTAL	—	26.62	19.92	6.70								

SAMPLE NUMBER 100F-2-21

	SPECIMEN 1	SPECIMEN 2	SPECIMEN 3
CONTAINER NUMBER	356		
DATE PLACED IN OVEN	6/8/89		
MASS OF CONTAINER + WET SPECIMEN	661.9		
MASS OF CONTAINER + DRY SPECIMEN	616.8		
MASS OF CONTAINER	152.3		
MASS OF WATER	45.1		
MASS OF DRY SPECIMEN	464.5		
MOISTURE CONTENTS (%)	9.7		
COMPUTED BY AND DATE			
CHECKED BY AND DATE			

UNITS
☒ g
☐ kg
☐ lbm

GPO 853 - 238

Figure 17.–Compaction specimen placement data sheet — example (back of form) — Continued.

7-2390 (12-86) Bureau of Reclamation	COMPACTED SPECIMEN PLACEMENT DATA SHEET	Designation USBR 5210-89
PROJECT: Example	FEATURE: Example	
COMPUTED BY / DATE	CHECKED BY / DATE	

1. SAMPLE NO.		100F-3			
2. SPECIMEN NO.		1			
3. MASS OF WET SPECIMEN + CONTAINER IN AIR	☐lbm ☐g				
4. MASS OF CONTAINER IN AIR	☐lbm ☐g				
5. MASS OF WET SPECIMEN IN AIR = (3) - (4)	☐lbm ☒g	127.0			
5a. MASS OF WET SPECIMEN = 0.002205[a] (5)	(lbm)	0.280			
6. MOISTURE CONTENT	(%)	16.5			
7. MASS OF DRY SPECIMEN IN AIR = $\frac{(5a) \text{ or } (5)}{1 + 0.01^{b} (6)}$	(lbm)	0.240			
8. MASS OF WET SPECIMEN + CONTAINER IN WATER	☐lbm ☐g				
9. MASS DIFFERENCE OF WET SPECIMEN + CONTAINER IN AIR AND WATER (3) - (8)	☐lbm ☐g				
10. MASS DIFFERENCE OF CONTAINER	☐lbm ☐g				
11. MASS DIFFERENCE OF SPECIMEN = (9) - (10)	☐lbm ☐g				
11a. MASS DIFFERENCE OF SPECIMEN = 0.002205 x (11)	lbm				
12. SPECIMEN VOLUME = 27.741[c] (11a) or (11)	in^3	4.000			
13a. DIAMETER 1	in				
13b. DIAMETER 2	in				
13c. DIAMETER 3	in				
14. AVERAGE DIAMETER = {(13a)+(13b)+(13c)}/3	in				
15. SPECIMEN LENGTH	in				
16. SPECIMEN VOLUME = 0.7854[d] (14)^2 (15)	in^3				
17. MOISTURE CONTENT	(%)	16.5			
18. DRY UNIT WEIGHT = $\frac{1728^{e} (7)}{(12) \text{ or } (16)}$	(lbf/ft^3)	103.7			
19. SPECIFIC GRAVITY		2.70			
20. ABSOLUTE DRY UNIT WEIGHT = 62.43[f] (19)	(lbf/ft^3)	168.6			
21. SOIL VOLUME = 100[g] $\frac{(18)}{(20)}$	(%)	61.5			
22. WATER VOLUME = $\frac{(18)\ (17)}{62.29^{h}}$	(%)	27.5			
23. FREE AIR VOLUME = 100[i] - (21) - (22)	(%)	11.0			
24. VOID RATIO = $\frac{100^{i}}{(21)} - 1$		0.626			
25. DEGREE OF SATURATION = $\frac{(100^{g})\ (22)}{(100^{i} - (21)}$	(%)	71.4			

a/ CONSTANT = $(\frac{1 \text{ lbm}}{453.6 \text{ g}})$

b/ CONSTANT = $(\frac{1.0}{100\%})$

c/ CONSTANT = $(\frac{1 \text{ ft}^3}{62.29 \text{ lbm}})\ (\frac{1728 \text{ in}^3}{1 \text{ ft}^3})$

d/ CONSTANT = $\frac{\pi}{4}$

e/ CONSTANT = $(\frac{1728 \text{ in}^3}{1 \text{ ft}^3})\ (\frac{1 \text{ lbf}}{1 \text{ lbm}})$

f/ CONSTANT = UNIT WEIGHT OF WATER AT 4 °C

g/ CONSTANT = $(\frac{100\%}{1.0})$

h/ CONSTANT = UNIT WEIGHT OF WATER AT 22 °C

i/ CONSTANT = UNITY, EXPRESSED AS PERCENT

Figure 18.–Compaction specimen placement data sheet (one-dimensional consolidation mold) — example.

14a. DIAMETER 1	_____ (in)
14b. DIAMETER 2	_____ (in)
14c. DIAMETER 3	_____ (in)
14d. AVERAGE DIAMETER [(14a) + (14b) + (14c)]/3	_____ (in)
14e. MEMBRANE DOUBLE THICKNESS	_____ (in)
14f. SPECIMEN DIAMETER (14d) - (14f)	_____ (in)

15a. HEIGHT OF CALIBRATION SPECIMEN	_____ (in)
15b. CALIBRATION SPECIMEN DIAL GAUGE READING	_____ (in)
15c. SOIL SPECIMEN DIAL GAUGE READING	_____ (in)
15d. DIAL GAUGE DIFFERENCE (15b) - (15c) 1/	_____ (in)
15e. INITIAL SOIL SPECIMEN HEIGHT (15a) + (15d)	_____ (in)

1/ ☐ DIAL GUAGE READING INCREASES WITH SPECIMEN COMPRESSION
☐ DIAL GUAGE READING DECREASES WITH SPECIMEN COMPRESSION (15c) - (15b)

UNITS ☐ g ☐ kg ☐ lbm

	PARTS	MASS - SPECIMEN 1			PARTS	MASS - SPECIMEN 2			PARTS	MASS - SPECIMEN 3		
		AIR	WATER	LOSS		AIR	WATER	LOSS		AIR	WATER	LOSS
CARRIAGE NO.												
MEMBRANE NO.												
TOP AND BOTTOM PLASTIC PLATE												
2 'o' RINGS												
MISC.												
TOTAL												

SAMPLE NUMBER 100F-3-1

	SPECIMEN 1	SPECIMEN 2	SPECIMEN 3
CONTAINER NUMBER	CL-45		
DATE PLACED IN OVEN	6/6/89		
MASS OF CONTAINER + WET SPECIMEN	380.1		
MASS OF CONTAINER + DRY SPECIMEN	343.1		
MASS OF CONTAINER	118.6		
MASS OF WATER	37.0		
MASS OF DRY SPECIMEN	224.5		
MOISTURE CONTENTS (%)	16.5		
COMPUTED BY AND DATE			
CHECKED BY AND DATE			

UNITS ☒ g ☐ kg ☐ lbm

GPO 853 - 238

Figure 18.–Compaction specimen placement data sheet (one-dimensional consolidation mold) — example (back of form) — Continued.

7-2390 (12-86) Bureau of Reclamation	COMPACTED SPECIMEN PLACEMENT DATA SHEET	Designation USBR 5210-89
PROJECT: Example	FEATURE: Example	
COMPUTED BY / DATE	CHECKED BY / DATE	

1. SAMPLE NO.		100F-4			
2. SPECIMEN NO.		31			
3. MASS OF WET SPECIMEN + CONTAINER IN AIR	☐lbm ☐g				
4. MASS OF CONTAINER IN AIR	☐lbm ☐g				
5. MASS OF WET SPECIMEN IN AIR = (3) - (4)	☐lbm ☐g				
5a. MASS OF WET SPECIMEN = 0.002205[a] (5)	(lbm)				
6. MOISTURE CONTENT	(%)				
7. MASS OF DRY SPECIMEN IN AIR = $\frac{(5a) \text{ or } (5)}{1 + 0.01^{b} (6)}$	(lbm)	1.046			
8. MASS OF WET SPECIMEN + CONTAINER IN WATER	☐lbm ☐g				
9. MASS DIFFERENCE OF WET SPECIMEN + CONTAINER IN AIR AND WATER (3) - (8)	☐lbm ☐g				
10. MASS DIFFERENCE OF CONTAINER	☐lbm ☐g				
11. MASS DIFFERENCE OF SPECIMEN = (9) - (10)	☐lbm ☐g				
11a. MASS DIFFERENCE OF SPECIMEN = 0.002205 x (11)	lbm				
12. SPECIMEN VOLUME = 27.741[c] (11a) or (11)	in^3				
13a. DIAMETER 1	in				
13b. DIAMETER 2	in				
13c. DIAMETER 3	in				
14. AVERAGE DIAMETER = [(13a)+(13b)+(13c)]/3	in	1.970			
15. SPECIMEN LENGTH	in	4.885			
16. SPECIMEN VOLUME = 0.7854[d] (14)^2 (15)	in^3	14.890			
17. MOISTURE CONTENT	(%)	9.7			
18. DRY UNIT WEIGHT = $\frac{1728^{e} (7)}{(12) \text{ or } (16)}$	(lbf/ft^3)	121.4			
19. SPECIFIC GRAVITY		2.65			
20. ABSOLUTE DRY UNIT WEIGHT = 62.43[f] (19)	(lbf/ft^3)	165.4			
21. SOIL VOLUME = 100[g] $\frac{(18)}{(20)}$	(%)	73.4			
22. WATER VOLUME = $\frac{(18)\ (17)}{62.29^{h}}$	(%)	18.9			
23. FREE AIR VOLUME = 100[i] - (21) - (22)	(%)	7.7			
24. VOID RATIO = $\frac{100^{i}}{(21)} - 1$		0.362			
25. DEGREE OF SATURATION = $\frac{(100^{g})\ (22)}{(100^{i} - (21)}$	(%)	71.1			

[a] CONSTANT = $(\frac{1 \text{ lbm}}{453.6 \text{ g}})$

[b] CONSTANT = $(\frac{1.0}{100\%})$

[c] CONSTANT = $(\frac{1 \text{ ft}^3}{62.29 \text{ lbm}})\ (\frac{1728 \text{ in}^3}{1 \text{ ft}^3})$

[d] CONSTANT = $\frac{\pi}{4}$

[e] CONSTANT = $(\frac{1728 \text{ in}^3}{1 \text{ ft}^3})\ (\frac{1 \text{ lbf}}{1 \text{ lbm}})$

[f] CONSTANT = UNIT WEIGHT OF WATER AT 4°C

[g] CONSTANT = $(\frac{100\%}{1.0})$

[h] CONSTANT = UNIT WEIGHT OF WATER AT 22 °C

[i] CONSTANT = UNITY, EXPRESSED AS PERCENT

Figure 19.–Compacted specimen placement data sheet (reference height of calibration specimen and compacted specimen determination) — example.

14a. DIAMETER 1	2.025	(in)
14b. DIAMETER 2	2.015	(in)
14c. DIAMETER 3	2.020	(in)
14d. AVERAGE DIAMETER [(14a) + (14b) + (14c)]/3	2.020	(in)
14e. MEMBRANE DOUBLE THICKNESS	0.050	(in)
14f. SPECIMEN DIAMETER (14d) - (14f)	1.970	(in)

15a. HEIGHT OF CALIBRATION SPECIMEN	5.000	(in)
15b. CALIBRATION SPECIMEN DIAL GAUGE READING	0.865	(in)
15c. SOIL SPECIMEN DIAL GAUGE READING	0.980	(in)
15d. DIAL GAUGE DIFFERENCE (15b) - (15c) 1/	-0.115	(in)
15e. INITIAL SOIL SPECIMEN HEIGHT (15a) + (15d)	4.885	(in)

1/ ☒ DIAL GUAGE READING INCREASES WITH SPECIMEN COMPRESSION
☐ DIAL GUAGE READING DECREASES WITH SPECIMEN COMPRESSION (15c) - (15b)

UNITS ☐ g ☐ kg ☐ lbm

	PARTS	MASS - SPECIMEN 1			PARTS	MASS - SPECIMEN 2			PARTS	MASS - SPECIMEN 3		
		AIR	WATER	LOSS		AIR	WATER	LOSS		AIR	WATER	LOSS
CARRIAGE NO.												
MEMBRANE NO.												
TOP AND BOTTOM PLASTIC PLATE												
2 'o' RINGS												
MISC.												
TOTAL												

SAMPLE NUMBER 100F-4-31

	SPECIMEN 1	SPECIMEN 2	SPECIMEN 3
CONTAINER NUMBER	CL-8		
DATE PLACED IN OVEN	6/6/89		
MASS OF CONTAINER + WET SPECIMEN	297.2		
MASS OF CONTAINER + DRY SPECIMEN	281.2		
MASS OF CONTAINER	116.4		
MASS OF WATER	16.0		
MASS OF DRY SPECIMEN	164.8		
MOISTURE CONTENTS (%)	9.7		
COMPUTED BY AND DATE			
CHECKED BY AND DATE			

UNITS
☒ g
☐ kg
☐ lbm

GPO 853 - 238

Figure 19.–Compacted specimen placement data sheet (reference height of calibration specimen and compacted specimen determination) — example — Continued.

7-2390 (12-86) Bureau of Reclamation	COMPACTED SPECIMEN PLACEMENT DATA SHEET	Designation USBR 5210-89

PROJECT	FEATURE
Example	Example
COMPUTED BY / DATE	CHECKED BY / DATE

1. SAMPLE NO.		100F-5			
2. SPECIMEN NO.		10			
3. MASS OF WET SPECIMEN + CONTAINER IN AIR	☐lbm ☐g				
4. MASS OF CONTAINER IN AIR	☐lbm ☐g				
5. MASS OF WET SPECIMEN IN AIR = (3) - (4)	☐lbm ☐g				
5a. MASS OF WET SPECIMEN = 0.002205[a] (5)	(lbm)				
6. MOISTURE CONTENT	(%)				
7. MASS OF DRY SPECIMEN IN AIR = $\frac{(5a) \text{ or } (5)}{1 + 0.01[b] (6)}$	(lbm)	0.231			
8. MASS OF WET SPECIMEN + CONTAINER IN WATER	☐lbm ☐g				
9. MASS DIFFERENCE OF WET SPECIMEN + CONTAINER IN AIR AND WATER (3) - (8)	☐lbm ☐g				
10. MASS DIFFERENCE OF CONTAINER	☐lbm ☐g				
11. MASS DIFFERENCE OF SPECIMEN = (9) - (10)	☐lbm ☐g				
11a. MASS DIFFERENCE OF SPECIMEN = 0.002205 x (11)	lbm				
12. SPECIMEN VOLUME = 27.741[c] (11a) or (11)	in^3	4.000			
13a. DIAMETER 1	in				
13b. DIAMETER 2	in				
13c. DIAMETER 3	in				
14. AVERAGE DIAMETER = [(13a)+(13b)+(13c)]/3	in				
15. SPECIMEN LENGTH	in				
16. SPECIMEN VOLUME = 0.7854[d] (14)^2 (15)	in^3				
17. MOISTURE CONTENT	(%)	≈ 0			
18. DRY UNIT WEIGHT = $\frac{1728[e] (7)}{(12) \text{ or } (16)}$	(lbf/ft^3)	99.8			
19. SPECIFIC GRAVITY		2.60			
20. ABSOLUTE DRY UNIT WEIGHT = 62.43[f] (19)	(lbf/ft^3)	162.3			
21. SOIL VOLUME = 100[g] $\frac{(18)}{(20)}$	(%)	61.5			
22. WATER VOLUME = $\frac{(18)\ (17)}{62.29[h]}$	(%)	0			
23. FREE AIR VOLUME = 100[i] - (21) - (22)	(%)	38.5			
24. VOID RATIO = $\frac{100[i]}{(21)}$ - 1		0.626			
25. DEGREE OF SATURATION = $\frac{(100[g]) (22)}{(100[i] - (21)}$	(%)	0			

a/ CONSTANT = $(\frac{1 \text{ lbm}}{453.6 \text{ g}})$

b/ CONSTANT = $(\frac{1.0}{100\%})$

c/ CONSTANT = $(\frac{1 \text{ ft}^3}{62.29 \text{ lbm}})\ (\frac{1728 \text{ in}^3}{1 \text{ ft}^3})$

d/ CONSTANT = $\frac{\pi}{4}$

e/ CONSTANT = $(\frac{1728 \text{ in}^3}{1 \text{ ft}^3})\ (\frac{1 \text{ lbf}}{1 \text{ lbm}})$

f/ CONSTANT = UNIT WEIGHT OF WATER AT 4°C

g/ CONSTANT = $(\frac{100\%}{1.0})$

h/ CONSTANT = UNIT WEIGHT OF WATER AT 22°C

i/ CONSTANT = UNITY, EXPRESSED AS PERCENT

Figure 20.-Compacted specimen placement data sheet (pouring and/or sifting technique) — example.

7-2390 (12-86) Bureau of Reclamation	COMPACTED SPECIMEN PLACEMENT DATA SHEET	Designation USBR 5210-89
PROJECT: Example	FEATURE: Example	
COMPUTED BY / DATE	CHECKED BY / DATE	

1. SAMPLE NO.		100E-2			
2. SPECIMEN NO.		41			
3. MASS OF WET SPECIMEN + CONTAINER IN AIR	☐lbm ☐g				
4. MASS OF CONTAINER IN AIR	☐lbm ☐g				
5. MASS OF WET SPECIMEN IN AIR = (3) - (4)	☐lbm ☐g				
5a. MASS OF WET SPECIMEN = 0.002205[a] (5)	(lbm)				
6. MOISTURE CONTENT	(%)				
7. MASS OF DRY SPECIMEN IN AIR = $\frac{(5a) \text{ or } (5)}{1 + 0.01[b] (6)}$	(lbm)	0.778			
8. MASS OF WET SPECIMEN + CONTAINER IN WATER	☐lbm ☐g				
9. MASS DIFFERENCE OF WET SPECIMEN + CONTAINER IN AIR AND WATER (3) - (8)	☐lbm ☐g				
10. MASS DIFFERENCE OF CONTAINER	☐lbm ☐g				
11. MASS DIFFERENCE OF SPECIMEN = (9) - (10)	☐lbm ☐g				
11a. MASS DIFFERENCE OF SPECIMEN = 0.002205 x (11)	lbm				
12. SPECIMEN VOLUME = 27.741[c] (11a) or (11)	in^3				
13a. DIAMETER 1	in				
13b. DIAMETER 2	in				
13c. DIAMETER 3	in				
14. AVERAGE DIAMETER = [(13a)+(13b)+(13c)]/3	in	1.978			
15. SPECIMEN LENGTH	in	5.015			
16. SPECIMEN VOLUME = 0.7854[d] $(14)^2$ (15)	in^3	15.41			
17. MOISTURE CONTENT	(%)	0			
18. DRY UNIT WEIGHT = $\frac{1728[e] (7)}{(12) \text{ or } (16)}$	(lbf/ft^3)	87.2			
19. SPECIFIC GRAVITY		2.60			
20. ABSOLUTE DRY UNIT WEIGHT = 62.43[f] (19)	(lbf/ft^3)	162.3			
21. SOIL VOLUME = 100[g] $\frac{(18)}{(20)}$	(%)	53.7			
22. WATER VOLUME = $\frac{(18)\ (17)}{62.29[h]}$	(%)	0			
23. FREE AIR VOLUME = 100[i] - (21) - (22)	(%)	46.3			
24. VOID RATIO = $\frac{100[i]}{(21)}$ - 1		0.862			
25. DEGREE OF SATURATION = $\frac{(100[g])\ (22)}{(100[i] - (21)}$	(%)	0			

[a] CONSTANT = $(\frac{1 \text{ lbm}}{453.6 \text{ g}})$

[b] CONSTANT = $(\frac{1.0}{100\%})$

[c] CONSTANT = $(\frac{1 \text{ ft}^3}{62.29 \text{ lbm}})\ (\frac{1728 \text{ in}^3}{1 \text{ ft}^3})$

[d] CONSTANT = $\frac{\pi}{4}$

[e] CONSTANT = $(\frac{1728 \text{ in}^3}{1 \text{ ft}^3})\ (\frac{1 \text{ lbf}}{1 \text{ lbm}})$

[f] CONSTANT = UNIT WEIGHT OF WATER AT 4 °C

[g] CONSTANT = $(\frac{100\%}{1.0})$

[h] CONSTANT = UNIT WEIGHT OF WATER AT 22 °C

[i] CONSTANT = UNITY, EXPRESSED AS PERCENT

Figure 21.–Compacted specimen placement data sheet — method E example.

14a. DIAMETER 1	2.035	(in)
14b. DIAMETER 2	2.030	(in)
14c. DIAMETER 3	2.020	(in)
14d. AVERAGE DIAMETER [(14a) + (14b) + (14c)]/3	2.028	(in)
14e. MEMBRANE DOUBLE THICKNESS	0.050	(in)
14f. SPECIMEN DIAMETER (14d) - (14f)	1.978	(in)

15a. HEIGHT OF CALIBRATION SPECIMEN	5.000	(in)
15b. CALIBRATION SPECIMEN DIAL GAUGE READING	1.065	(in)
15c. SOIL SPECIMEN DIAL GAUGE READING	1.050	(in)
15d. DIAL GAUGE DIFFERENCE (15b) - (15c) 1/	0.015	(in)
15e. INITIAL SOIL SPECIMEN HEIGHT (15a) + (15d)	5.015	(in)

1/ ☒ DIAL GUAGE READING INCREASES WITH SPECIMEN COMPRESSION
☐ DIAL GUAGE READING DECREASES WITH SPECIMEN COMPRESSION (15c) - (15b)

UNITS ☐ g ☐ kg ☐ lbm

	PARTS	MASS - SPECIMEN 1			PARTS	MASS - SPECIMEN 2			PARTS	MASS - SPECIMEN 3		
		AIR	WATER	LOSS		AIR	WATER	LOSS		AIR	WATER	LOSS
CARRIAGE NO.												
MEMBRANE NO.												
TOP AND BOTTOM PLASTIC PLATE												
2 'o' RINGS												
MISC.												
TOTAL												

SAMPLE NUMBER _____

	SPECIMEN 1	SPECIMEN 2	SPECIMEN 3	
CONTAINER NUMBER				UNITS
DATE PLACED IN OVEN				
MASS OF CONTAINER + WET SPECIMEN				☐ g
MASS OF CONTAINER + DRY SPECIMEN				
MASS OF CONTAINER				☐ kg
MASS OF WATER				
MASS OF DRY SPECIMEN				☐ lbm
MOISTURE CONTENTS (%)				
COMPUTED BY AND DATE				
CHECKED BY AND DATE				

GPO 853 - 238

Figure 21.–Compacted specimen placement data sheet — method E example (back of form) — Continued.

APPENDIX

X1. GUIDELINES FOR PREPARING TEST SPECIMENS CONTAINING PLUS NO. 4 MATERIAL

X1.1 Scope

X1.1.1 This appendix provides guidelines for preparing soil test specimens that contain particle sizes, which in relation to the size of the specimen, may affect results obtained from the test. These guidelines deal with soil which contains plus No. 4 (4.75 mm) material.

X1.1.2 The presence of plus No. 4 (4.75 mm) material in a soil generally increases shear strength and decreases compressibility and hydraulic conductivity, depending on the percentage of plus No. 4 material present. The ability to accurately measure these properties in the laboratory is restricted by the size of test specimen which may be tested (test equipment size).

X1.1.3 The following guidelines are presented for shear strength tests including triaxial shear and direct shear.

X1.1.4 Specimen size selection guide.

X1.1.4.1 Specimen size selection is based on the maximum size particle present in the soil. Select a specimen size having a minimum dimension (length, height, or diameter) at least six times the size of the maximum particle present in the material to be tested, as outline in the following table.

Maximum particle size present		*Minimum specimen dimension*	
in	mm	in	mm
3	75	18	450
1-1/2	37.5	9	225
3/4	19	4.5	115
3/8	9.5	2.25	58
No. 4	4.75	1.50	29

If the appropriate size test specimen cannot be used, use the following criteria to deal with the oversize (material which exceeds the maximum size specified by the table):

- If the material contains less than 10-percent oversize, remove the oversize material and discard it.
- If the material contains 10-percent or more oversize, the oversize material may be removed and replaced using a procedure prepared by the Corp of Engineers [1]. An example calculation form and example gradation plot are shown on figrues X1.1 and X1.2, respectively.
- Recent research [2] has shown that results of triaxial shear tests performed on full gradation and removed/replaced gradation can give a wide range of results depending on the type of triaxial shear test performed. Triaxial shear tests performed in the unconsolidated-undrained state can result in a value of shear strength higher than the actual shear strength of the material. Triaxial shear tests performed in the consolidated-undrained state can result in a value of shear strength lower than the actual shear strength of the material. Therefore, if it is necessary to perform triaxial shear tests on removed/replaced material; the validity of results must be established by relating test results to available work performed on both full size and removed/replaced materials.

The technique used; that is, if the oversize material is removed and discarded or if the oversize material is removed and replaced, must be recorded on the sample preparation data forms.

X1.2 References

[1] *Laboratory Soils Testing*, EM 1110-2-1906, U.S. Army Corp of Engineers, Change 1, pp. VIA-5,6, May 1980.

[2] Donaghe, Robert T., and Victor H. Torrey III, *Strength and Deformation Properties of Earth-Rock Mixtures*, Geotechnical Laboratory, U.S. Army Engineer Waterways Experiment Station, Vicksburg, Mississippi, September 1982.

7-2391 (12-86) Bureau of Reclamation	**OVERSIZE MATERIAL SCALP AND REPLACEMENT DATA SHEET**	Designation USBR 5210-89
PROJECT: Example	FEATURE: Example	
COMPUTED BY / DATE	CHECKED BY / DATE	

1. SAMPLE NO. 100F-2
2. TEST DESIGNATION USBR 5750 - CU Triaxial Shear
3. TOTAL DRY MASS OF MATERIAL REQUIRED FOR A SINGLE TEST SPECIMEN 101.44 ☒ lbm ☐ g
4. PERCENTAGE OF PLUS NO. 4 (4.75-mm) MATERIAL PRESENT IN SAMPLE 63.7 %
5. PERCENTAGE OF OVERSIZE MATERIAL TO BE REMOVED FROM SAMPLE AND REPLACED 25.9 %

SIEVE SIZE (in)	ORIGINAL SAMPLE			TEST SPECIMEN		MASS FOR COMPACTION SPECIMEN ☒ lbm ☐ g
	% RETAINED TOTAL SAMPLE (a)	% RETAINED INDIVIDUAL SIEVE (b)	% ORIGINAL SAMPLE (c)	% REPLACEMENT (5) × (c)/((4) - (5)) (d)	% TOTAL (c) + (d) (e)	(3) × (e)/100 (f)
3	0	0	0	0	0	0
1-1/2	25.9	25.9	0	0	0	0
3/4	41.4	15.5	15.5	10.6	26.1	26.48
3/8	53.6	12.2	12.2	8.4	20.6	20.90
NO. 4	63.7	10.1	10.1	6.9	17.0	17.24
PAN	100	36.3	36.3	0	36.3	36.82
TOTAL	———	100	74.1	25.9	100	101.44

GPO 852-936

Figure X1.1.–Oversize material–scalp and replacement data sheet — example.

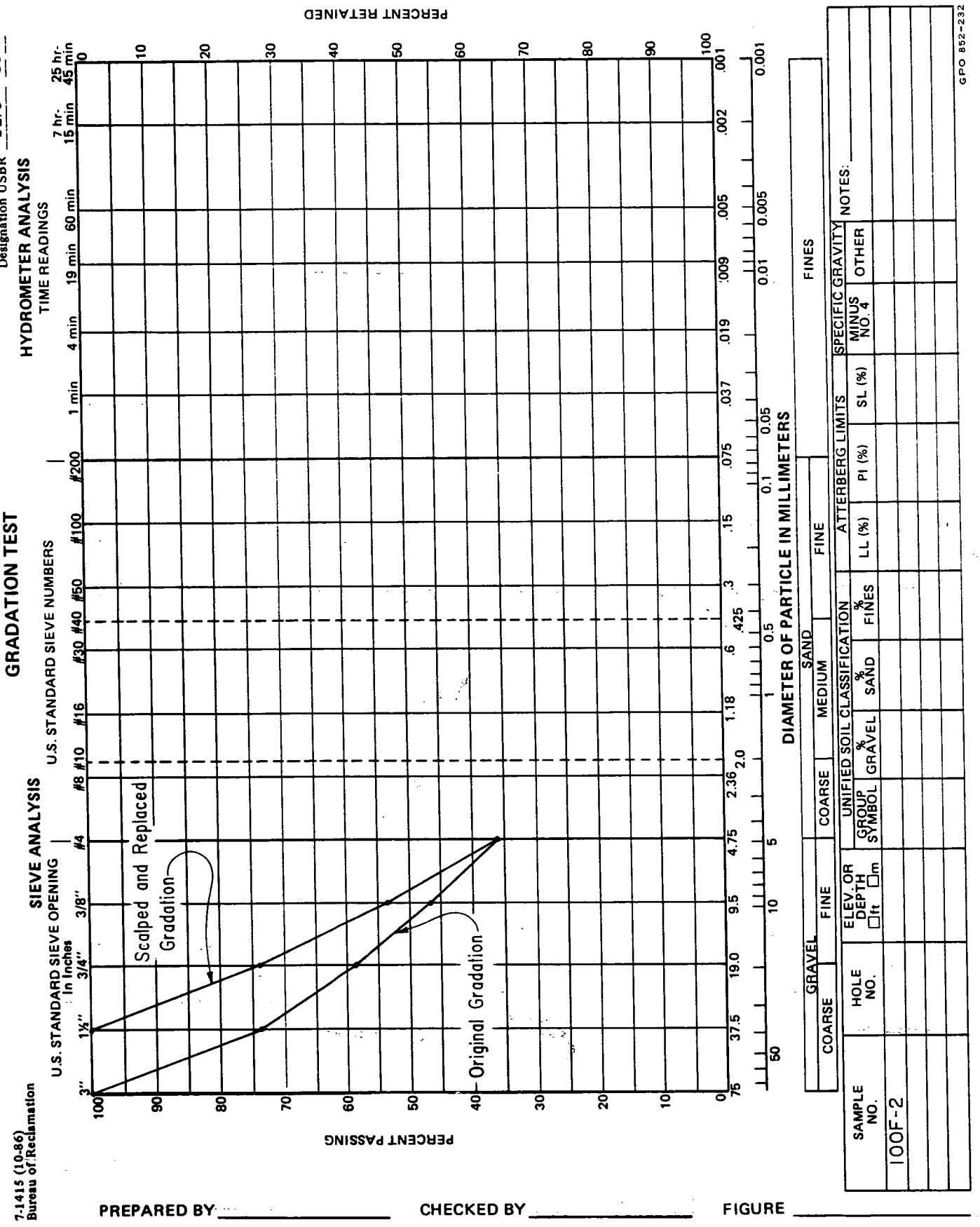

Figure X1.2.–Gradation test plot (comparison of removed and replaced gradation with original gradation) — example.

X2. ADDED WATER DETERMINATION FOR COMPACTED SOIL SPECIMENS

X2.1 Scope

X2.1.1 This appendix outlines the procedure for determining the mass of water to be added to or removed from a soil in order to bring the soil to a specific moisture content.

X2.1.2 Procedure

X2.1.2.1 All data are to be recorded on the "Added Water Determination" form as shown on figure X2.1.

X2.1.2.2 The natural or air-dried moisture content of the soil specimen is to be determined in accordance with USBR 5300. Record the moisture content value in column (1) as *Initial moisture content (%).*

X2.1.2.3 The desired moisture content for each specimen is determined. Record the value in column (2) as the *Desired moisture content (%).*

X2.1.2.4 Calculate the moisture content difference for each test specimen.

$$(3) = (2) - (1) + 0.3 \qquad \text{(X2-1)}$$

where:

(3) = moisture content difference, %
(2) = desired moisture content, %
(1) = initial moisture content, %
0.3 = moisture content added to account for assumed handling and evaporation loss, %

[Record the values for each test specimen in col. (3) of the form as *Moisture content (%), Difference.*]

X2.1.2.5 Determine the mass of the container and record the value in column (5) of the form as *Mass of container.*

X2.1.2.6 Determine the mass of the soil and container. Record the value in column (4) as *Mass of specimen and container.*

X2.1.2.7 Calculate the mass of the specimen.

$$(6) = (4) - (5) \qquad \text{(X2-2)}$$

where:

(6) = mass of specimen, g
(4) = mass of specimen and container, g
(5) = mass of container, g

[Record the value in column (6) as *Mass of Specimen.*]

NOTE X2.1.–If a container is not needed, subparagraphs X.1.2.5 through X1.2.7 may be omitted and the mass of the specimen recorded directly.

X2.1.2.8 Calculate the dry mass of the specimen.

$$(7) = \frac{(6)}{1 + \frac{(1)}{100}} \qquad \text{(X2-3)}$$

where:

(7) = dry mass of specimen, g
(6) = mass of specimen, g
(1) = initial moisture content, %
100 = convert from percent to decimal

[Record the value in col. (7) as *Dry mass of specimen.*]

X2.1.2.9 Calculate the mass of water to add to each soil specimen.

$$(8) = (7)\ \frac{(3)}{100} \qquad \text{(X2-4)}$$

where (8) equals mass of water to add, g.

[Record the value in col. (8) as *Mass of water to add.*]

NOTE X2.2.–The water may be measured by volume, rather than mass. For the purpose of this procedure, assume 1 gram equal to 1 milliliter equal to 1 cubic centimeter.

7-2327 (10-85) Bureau of Reclamation	ADDED WATER DETERMINATION	Designation USBR - 5210 - 89
SAMPLE NO. 100F-10	PROJECT Example	FEATURE Example
COMPUTED BY	DATE	CHECKED BY / DATE

Specimen No.	Moisture Content %			Mass g				
	Initial (1)	Desired (2)	Difference (3)	Specimen and Container (4)	Container (5)	Specimen (6)	Dry Mass of Specimen (7)	Water to Add (8)
10	6.3	9.7	3.4	397.6	258.7	138.9	130.7	4.44
			(2) – (1)			(4) – (5)	$100\left[\frac{(6)}{100+(1)}\right]$	$(7)\left[\frac{(3)}{100}\right]$

Remarks: _____

Auxiliary Tests:

USBR 5300 - 89

GPO 848-762

Figure X2.1.–Added water determination — example.

X3. SPECIMEN INITIAL PLACEMENT CONDITIONS

X3.1 Scope

X3.1.1 This appendix outlines the procedure for determining initial conditions of undisturbed or compacted test specimens used for laboratory testing.

X3.1.2 Two methods of determining specimen volume are described (1) the mass-in-air/mass-in-water method, and (2) the direct measurement method.

X3.1.3 The procedure also describes the equations for calculating specimen dry unit weight, void ratio, and degree of saturation.

X3.2 Procedure

X3.2.1 Record all data on the "Compacted Specimen Placement Data Sheet" as shown in figure 17 through 21.

X3.2.2 Record the sample and specimen number on the front of the form.

X3.2.3 Determine the wet mass and dry mass of the compacted specimen as follows.

X3.2.3.1 Determine the mass of the wet specimen and container in air. Record the value to 0.1 g or 0.01 lbm on line (3).

X3.2.3.2 Determine the mass of the container in air from either direct measurement or from container calibration data. Record the value to 0.1g or 0.01 lbm on line (4)

NOTE X3.1 If the mass-in-air/mass-in-water method is performed, the mass-in-air of the container shall come from the equipment calibration data sheet.

X3.2.3.3 Calculate the mass of the wet specimen by subtracting line (4) from line (3). Record the value to 0.1 g or 0.01 lbm on line (5).

X3.2.3.4 If the mass of wet specimen was determined in grams calculate the equivalent pounds mass as shown on the form. Record the value to the nearest 0.001 lbm on line (5a).

X3.2.3.5 Determine the moisture content of the specimen to 0.1 percent and record on line (6).

X3.2.3.6 Calculate the dry mass of the specimen as follows:

X3.2.3.6.1 If the masses on lines (3), (4), and (5) were recorded in grams, calculate the dry mass using the value of wet mass from line (5a) and record the value to 0.01 lbm on line (7).

X3.2.3.6.2 If the masses on lines (3), (4), and (5) were recorded in lbm, calculate the dry mass using the value of wet mass from line (5) and record the value to 0.01 lbm on line (7).

X3.2.4 Determine specimen volume.

X3.2.4.1 Mass-in-air/mass-in-water method:

X3.2.4.1.1 Obtain the number, mass-in-air, and loss (mass difference) of the carriage and rod, membrane, top end plate, bottom end plate, and two O-rings from the equipment calibration sheets and record to 0.1 g or 0.01 lbm as shown on the back of the form.

X3.2.4.1.2 Compute and record the sums of the *Mass-in-air* and *Mass difference* on back of the form as *Total.* Record the value of container mass-in-air on line (4) and the value of container mass difference on line (10) to 0.1 g or 0.01 lbm as shown on the front of the form.

X3.2.4.1.3 Determine the mass of the wet specimen plus the container in water as follows:

X3.2.4.1.3.1 Place the specimen in the carriage and suspend it with the rod from the balance or scale in the water bath.

X3.2.4.1.3.2 Using a water bulb with stem, flush all air bubbles from the specimen, container, and submerged portion of the rod.

X3.2.4.1.3.3 Record the mass of the wet specimen plus container in water to 0.1 g or 0.01 lbm on line (8).

X3.2.4.1.4 Calculate the difference in mass between the specimen plus container in water and the specimen plus container in air and record the value to 0.1 g or 0.01 lbm on line (9).

X3.2.4.1.5 Calculate the mass difference of the specimen, and record the value to 0.1 g or 0.01 lbm on line (11).

X3.2.4.1.6 If the mass difference of the specimen was determined in grams, calculate the equivalent pound mass as shown on the form. Record the value to the nearest 0.001 lbm on line (11a).

X3.2.4.1.7 Calculate the specimen volume as follows:

X3.2.4.1.7.1 For the mass difference determined in grams and converted to pound mass, calculate the specimen volume using the value of mass difference from line (11a) and record the value to the nearest 0.01 in^3 on line (12).

X3.2.4.1.7.2 For the mass difference determined in pound mass, calculate the specimen volume using the value of mass difference from line (11) and record the value to the nearest 0.01 in^3 on line (12).

X3.2.4.2 Direct measurement method:

X3.2.4.2.1 Measure the diameter of the specimen at three locations along the axis of the specimen using a pi tape. Record the diameters on the form to 0.001 inch on lines (14a) through (14c).

X3.2.4.2.2 Calculate the average diameter and record to 0.001 inch on line (14d).

X3.2.4.2.3 Measure the specimen height using a dial gauge and reference specimen as follows:

X3.2.4.2.3.1 Determine the height of the appropriate size brass calibration specimen and record to the nearest 0.001 inch on line (15a).

X3.2.4.2.3.2 Place the calibration specimen and two blank end plates into the dial gauge reference stand. Determine the dial gauge reading as *Calibration specimen*

dial gauge reading and record to the nearest 0.001 inch on line (15b).

X3.2.4.2.3.3 Remove the calibration specimen and place the soil specimen with blank end plates on either end into the dial gauge reference stand. Determine the dial gauge reading as *Soil specimen gauge reading* and record to the nearest 0.001 inch on line (15c).

X3.2.4.2.3.4 Calculate the *Dial guage difference* and record to the nearest 0.001 inch on line (15d).

X3.2.4.2.3.5 Calculate the *Initial soil specimen length* and record to the nearest 0.001 inch on line (15e).

NOTE X3.2.–The example calculation shown on figure 21 indicates dial gauge readings increasing with compression of the specimen. If the dial gauge reading decreases with compression of the specimen the gauge difference equals (15c) – (15b). Note this on the form.

X3.2.4.3 Calculate the specimen volume and record to 0.01 in^3 one line (16).

X3.2.5 Calculate the dry unit weight of the specimen and record to 0.1 lbf/ft^3 on line (18).

X3.2.6 Calculate the absolute dry unit weight of the specimen and record to 0.1 lbf/ft^3 on line (20).

NOTE X3.3–The calculation determines the absolute unit weight of the specimen using density of water as 62.43 lbm/ft^3 (density of water at 4 °C).

X3.2.7 Calculate the volume of solids in the specimen and record to 0.1 percent on line (21).

X3.2.8 Calculate the volume of water in the specimen and record to 0.1 percent on line (22).

X3.2.9 Calculate the volume of free air in the specimen and record to 0.1 percent on line (23).

X3.2.10 Calculate the void ratio and record to 0.001 on line (24).

X3.2.11 Calculate the degree of saturation and record to 0.1 percent on line (25).

UNITED STATES DEPARTMENT OF THE INTERIOR
BUREAU OF RECLAMATION

USBR 5215-89

PROCEDURE FOR

PREPARING SOIL SPECIMENS FOR LABORATORY USE FROM UNDISTURBED SAMPLES

INTRODUCTION

This procedure is under the jurisdiction of the Geotechnical Services Branch, code D-3760, Research and Laboratory Services Division, Denver Office, Denver, Colorado. The procedure is issued under the fixed designation USBR 5215. The number immediately following the designation indicates the year of acceptance or the year of last revision.

1. Scope

1.1 This designation outlines the procedure for preparing soil specimens for laboratory use from undisturbed samples.

1.2 This procedure is valid when preparing test specimens from undisturbed block or tube-type samples. Two soil specimen preparation procedures are discussed. Method A outlines the procedure for preparing specimens that are trimmed directly into a testing chamber. Method B outlines the procedure for preparing specimens that are trimmed and placed into a membrane prior to testing. Table 1 provides guidance concerning which specimen preparation method should generally be used for a variety of laboratory tests.

Table 1. – Specimen preparation guide.

Test type	Method of specimen preparation
Triaxial shear	B
Direct shear	A
Repeated direct shear	A
Back pressure permeability	B
Consolidation	A
Pinhole	A
Expansion	A
Uplift	A
Constant rate of loading consolidation	A
Exposed end plate	A or B
Unconfined compression	A or B
Cyclic triaxial properties	B
Cyclic triaxial strength	B

2. Auxiliary Tests

2.1 An initial moisture content must be determined in accordance with USBR 5300 as part of performing this procedure. Physical properties are determined as appropriate and may include specific gravity testing (USBR 5320), gradation analysis (USBR 5330), liquid limit determination (USBR 5350), or plastic and shrinkage limit determination (USBR 5360 and 5365).

3. Applicable Documents

3.1 *USBR Procedures*:
USBR 3900 Standard Definitions of Terms and Symbols Relating to Soil Mechanics
USBR 5200 Processing Tube-Type Samples
USBR 5300 Determining Moisture Content of Soil and Rock by the Oven Method
USBR 5320 Determining Specific Gravity of Soils
USBR 5330 Performing Gradation Analysis of Fines and Sand Size Fraction of Soils, Including Hydrometer Analysis
USBR 5350 Determining the Liquid Limit of Soils by the One-Point Method
USBR 5360 Determining the Plastic Limit and Plasticity Index of Soils
USBR 5365 Determining Shrinkage Limit and Shrinkage Ratio of Soils

4. Summary of Method

4.1 An undisturbed soil sample is secured to a cutting stand, and a test specimen is carefully trimmed from the sample using a cutting apparatus as shown on figure 1 or 2. The specimen is either trimmed directly into a testing chamber (method A), or is trimmed and placed in a membrane prior to testing (method B).

4.2 For some applications, a hand-operated soil lathe can be used to trim undisturbed samples. See appendix X1 for a detailed description of the trimming procedure using the soil lathe.

5. Significance and Use

5.1 Careful preparation of test specimens from undisturbed soil samples is of extreme importance in obtaining reliable laboratory test results to accurately assess engineering properties of soil in-place.

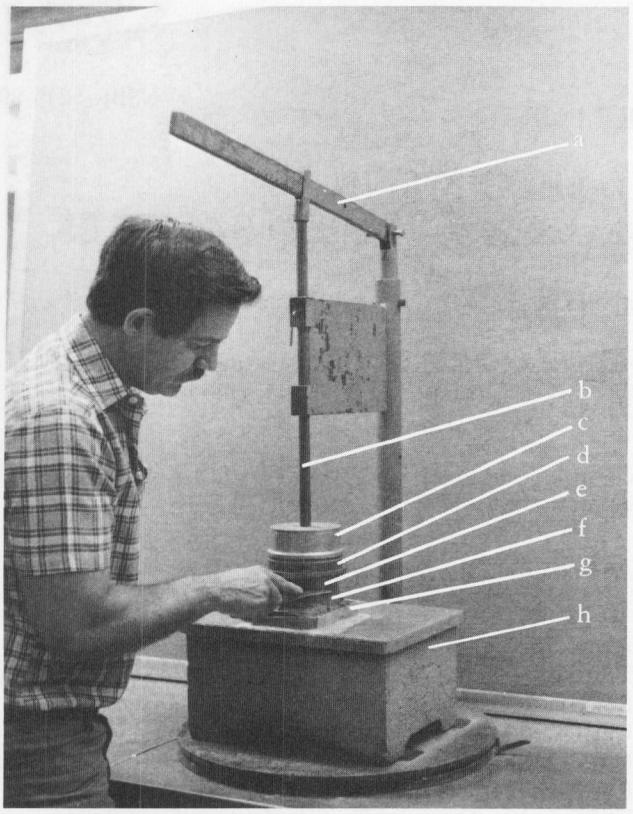

Figure 1. – Cutting an undisturbed soil specimen directly into testing chamber. (a) lever arm, (b) guide rod, (c) spacer chamber, (d) testing chamber, (e) cutting bit, (f) soil sample, (g) wax, and (h) cutting stand.

5.2 Extreme care must be exercised when handling undisturbed samples during specimen preparation to minimize disturbance which could affect laboratory test results.

6. Terminology

6.1 Definitions are in accordance with USBR 3900.

6.2 Terms not included in USBR 3900 specific to this designation are:

6.2.1 *Block Sample.*–An undisturbed soil sample, generally hand-cut from parent stratum, wrapped in cheese cloth and wax for transport.

6.2.2 *Tube-type Sample.*–An undisturbed soil sample obtained by using one of a number of mechanical samplers (e.g., Denison, Osterberg, Pitcher, Butters, auger, etc.). Drilling fluid is commonly used to assist in the drilling process.

6.2.3 *Liner.*–A nonrotating inner part of a mechanical sampler used to receive and hold the sample during drilling and to facilitate handling. The ends of the liner are capped and waxed to preserve the natural moisture content of the sample during shipment and storage.

6.2.4 *Slickenside.*–A surface that has become polished from the sliding motion of an adjacent surface.

6.2.5 *Varved Clay.*–Alternating thin layers of silt (or fine sand) and clay formed by variations in sedimentation during the various seasons of the year, often exhibiting contrasting colors when partially dried.

6.2.6 *Wax.*–The term refers to microcrystalline waxes.

7. Interferences

7.1 The presence of gravel or coarse sand particles may make trimming the test specimen difficult if the coarser particles are in the path of the cutting bit. If this situation occurs and the gravel or coarse sand particles are removed, soil matrix material shall be used to fill in the void. If material from another specimen or sample is substituted, a note shall be made on the appropriate data form.

8. Apparatus

8.1 *Power Saw.*–A saw of appropriate type and of sufficient power to cut through medium to large soil blocks should be used. The cutting device (band, blade, chain, etc.) should be of a type appropriate for cutting through soil and/or rock.

8.2 *Equipment Unique to This Procedure* (fig. 1):

8.2.1 *Cutting Bit.*–A cutting bit may be either round or square depending on specimen dimensions. Generally, it is made of stainless steel and has a sharp cutting edge.

8.2.2 *Lever Arm.*–A lever is used to advance the cutting bit into the soil sample.

8.2.3 *Spacer Chamber.*–A chamber is used to separate the cutting bit from the guide rod. As the trimming process proceeds, the specimen advances into this chamber. Generally, the chamber is made of plastic or aluminum.

8.2.4 *Testing Chamber.*–The appropriate chamber to confine the specimen during testing is used. The test specimen is trimmed directly into the testing chamber as shown on figure 1.

8.2.5 *Membrane Stretcher.*–A membrane stretcher with vacuum tube attachment for fitting or placing a membrane.

8.2.6 *O-Ring Stretcher.*–A mechanical stretcher used to facilitate O-ring placement over specimen end plates.

8.2.7 *Soil Lathe.*–A specially designed lathe used for trimming soil specimens (see app. XI).

8.2.8 *Miscellaneous Equipment.*–Wax pot, brush, knife, straightedge, etc., are needed for waxing, trimming, and preparing test specimens.

9. Precautions

9.1 *Safety Precautions*:

9.1.1 All necessary safety equipment (face protection, chaps, etc.) are to be worn whenever using the power saw. All manufacturers' operating instructions are to be strictly followed.

9.1.2 Caution should be used when trimming soil with a knife or other sharp or pointed tools.

9.1.3 The lever arm should be removed from the trimming apparatus when not in use. This may prevent injury in case the guide rod locking screw becomes loose.

9.1.4 Caution should be used when handling sample liners which have been previously cut.

9.2 *Technical Precautions*:

9.2.1 The soil specimen must be handled with care to avoid unnecessary disturbance. Specimens containing slickensided surfaces or zones of varved clay must be handled with extreme care.

9.2.2 The cutting bits should be regularly checked for nicks or warpage and should be kept sharp. If the cutting bits are damaged, they should be repaired or replaced.

10. Sampling, Test Specimens, and Test Units

10.1 *Block Sample Preparation*:

10.1.1 Examine the soil sample to determine if it can withstand vibration. If the sample is competent, a suitable power saw may be used to cut the block sample into sections of a workable size [approximately 6- to 8-inch (150- to 200-mm) cubes]. If the block sample is determined to be of material that may not be capable of withstanding vibrations, it is recommended that test specimens be cut directly from the block.

10.1.2 Cut the sections into still smaller units of an appropriate size for the required test specimen. The unit from which a test specimen is to be trimmed should be at least 1/2 inch (13 mm) larger in diameter and at least 1 inch (25 mm) longer than the finished specimen size.

10.1.3 Wax and store the units from which specimens will be trimmed.

10.1.4 Wax and store any part or parts of the block not used.

10.2 *Tube-type Sample Preparation*:

10.2.1 The tube-type sample is to be processed in accordance with USBR 5200.

10.2.2 Measure and cut the liner about 1 inch longer than the desired specimen length.

10.2.3 Carefully slide a thin object (stiff wire, hacksaw blade) between the soil and the liner.

10.2.4 Using a sawing motion, cut between the soil and liner around the circumference of the sample in order to free the soil from the liner.

10.2.5 Set the sample upright and attempt to lift the liner from the soil.

10.2.6 If the liner cannot be removed, wax the ends of the sample and cut the liner axially.

10.2.7 Extreme care must be taken to prevent the liner from springing open suddenly after being cut, which could result in the sample splitting or pulling apart.

10.2.8 Carefully spread the liner and remove the sample.

10.2.9 Wax the sample and cut it into appropriate shapes and lengths using a band saw or other suitable cutting device in accordance with subparagraph 10.1.2.

10.2.10 Wax each portion from which specimens will be trimmed.

10.2.11 Wax and store any remaining portions of the undisturbed sample not needed for testing.

11. Calibration and Standardization

11.1 Not applicable, reference standards are not used for this procedure.

12. Conditioning

12.1 It is recommended that as much of the handling and trimming of the undisturbed sample as possible be performed in a humidity controlled room to minimize possible moisture loss.

13. Procedure

13.1 *Method A.*–Preparing specimens that are trimmed directly into a testing chamber:

13.1.1 Wax the soil sample to the cutting stand.

13.1.2 Check the alignment of the sample to ensure that it is perpendicular to the cutting stand surface.

13.1.3 Place the cutting stand plus soil sample under the guide rod then position the cutting bit, testing chamber, and spacer chamber (fig. 1) on top of the sample.

13.1.4 Lower the guide rod into contact with the spacer chamber and attach the lever arm to the apparatus.

13.1.5 Ensure that the sample and the assembled specimen container are aligned and are perpendicular to the cutting stand surface.

13.1.6 Begin trimming the soil sample with an appropriate size knife as shown on figure 1.

13.1.7 Trim the soil as close to the bit as possible without cutting through an imaginary line projected vertically downward from the cutting bit edge to the stand. Trim the soil at least 1 inch (25 mm) below the bit and maintain a slight outward slope to avoid undercutting of the specimen. Pull down on the lever arm of the apparatus until the cutting bit moves down approximately 1/4 inch (6 mm).

13.1.8 Repeat subparagraphs 13.1.6 and 13.1.7 until the cutting bit has traveled the entire length of the soil sample or as far as necessary to obtain a test specimen. The specimen will advance into the testing chamber and spacer chamber as the trimming process proceeds.

13.1.9 Position the specimen so that equal amounts of soil protrude from each end of the testing chamber or to a point where the soil to be tested is contained within the testing chamber.

13.1.10 Remove the lever arm and raise and secure the guide rod.

13.1.11 Remove the spacer chamber and trim the specimen flush with the top of the testing chamber using a sharpened straightedge tool.

13.1.12 Place a smooth flat plate (usually plastic) over the trimmed end of the soil specimen to preserve moisture.

13.1.13 Free the soil specimen from the cutting stand and, with the cover plate in place, invert the testing chamber.

13.1.14 Remove the cutting bit and use the sharpened straightedge tool to trim the soil flush with

the testing chamber. After trimming, place a smooth flat plate over the soil.

13.1.15 If gravel or coarse sand is encountered in the cutting bit path, refer to subparagraph 7.1 for a soil substitution procedure.

13.1.16 As a general guideline, the maximum particle size should not exceed one-sixth the diameter of the test specimen. If this criterion is exceeded, consideration should be given to not testing specimens from that soil sample, or to testing a larger specimen if material is available. If such specimens are tested, it should be noted on the appropriate test data sheets.

13.2 *Method B.*–Preparing specimens that are trimmed and then placed into a membrane prior to testing:

NOTE 1.–The following procedure is commonly used in the Bureau of Reclamation, and has been found to work well for the majority of Bureau Project soils. For specimen trimming procedures using a soil lathe, see appendix XI.

13.2.1 Wax the soil sample to the cutting stand.

13.2.2 Check the alignment of the sample to ensure that it is perpendicular to the cutting stand surface.

13.2.3 Place the cutting stand plus soil sample under the guide rod; then position the cutting bit and spacer chamber (fig. 2) on top of the sample.

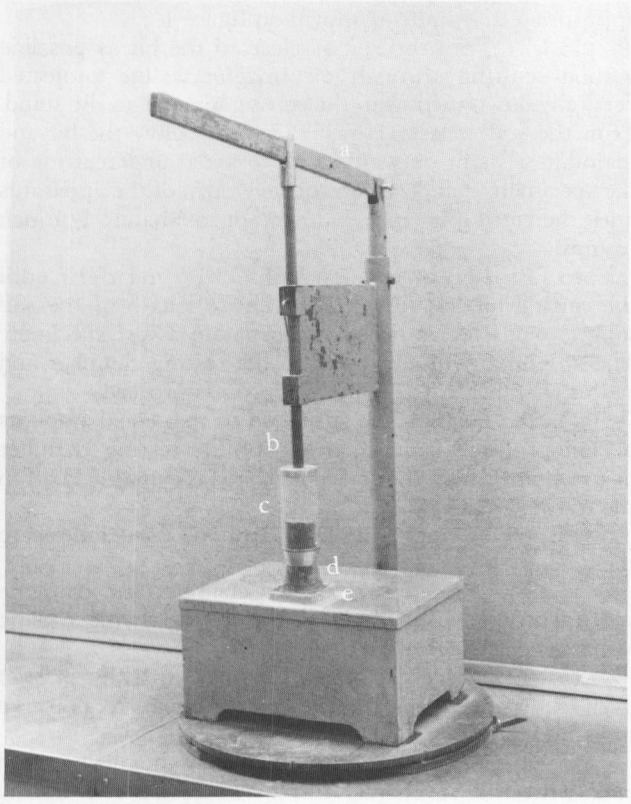

Figure 2. – Cutting an undisturbed soil specimen to be placed in a membrane. (a) lever arm, (b) guide rod, (c) spacer chamber, (d) cutting bit, and (e) wax.

13.2.4 Lower the guide rod into contact with the spacer chamber and attach the lever arm to the apparatus.

13.2.5 Ensure that the sample and the assembled specimen container are aligned and are perpendicular to the cutting stand surface.

13.2.6 Begin trimming the soil with an appropriate size knife.

13.2.7 Trim the soil as close to the bit as possible without cutting through an imaginary line projected vertically downward from the cutting bit edge to the stand. Trim the soil at least 1 inch (25 mm) inch below the bit and maintain a slight outward slope to avoid undercutting the specimen. Pull down on the lever arm of the apparatus until the cutting bit moves approximately 1/4 inch (6 mm).

13.2.8 Repeat subparagraphs 13.2.6 and 13.2.7 until the cutting bit has traveled the entire length of the soil sample or as far as necessary to obtain a test specimen. The specimen will advance into the spacer chamber as the trimming process proceeds.

13.2.9 Remove the lever arm and raise and secure the guide rod.

13.2.10 Free the soil specimen from the cutting stand and remove the spacer chamber from around the specimen.

13.2.11 Support the specimen and carefully separate the cutting bit from the soil.

13.2.12 Place the specimen in a trimming mold (fig. 3) and trim the excess length of material not required for testing.

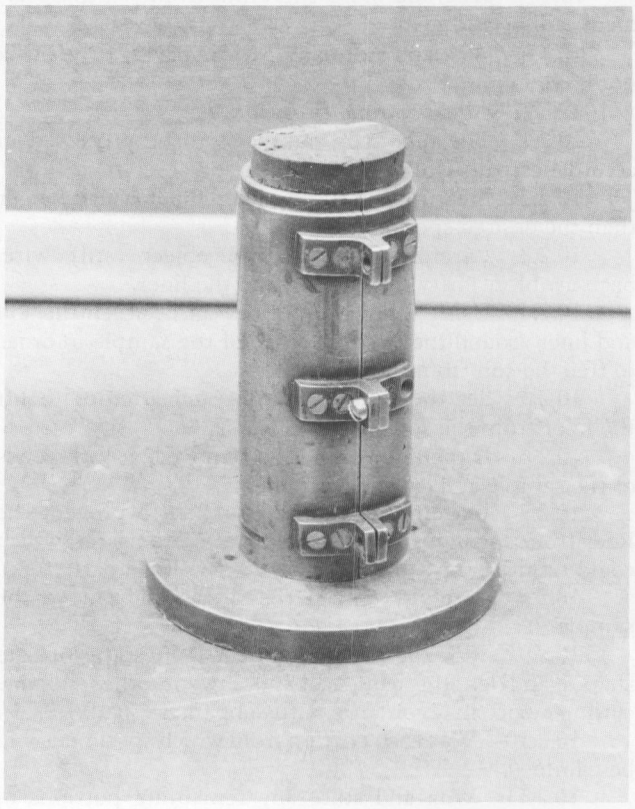

Figure 3. – Soil specimen in trimming mold.

13.2.13 Place the specimen in a membrane in preparation for testing.

13.2.14 The following procedure is to be followed for fitting end caps and the membrane on the test specimen [1].[1]

a. Place the specimen on the lower end cap and place the top cap on the upper end of the specimen.

b. Fit two rubber O-rings over an O-ring stretcher and roll them to near the middle of its length.

c. Fit a rubber membrane inside the membrane stretcher and fold back the ends over the outside of the tube so that the membrane is not wrinkled or twisted.

d. Apply suction to the fitting on the membrane stretcher so as to draw the membrane tightly against the inside wall of the stretcher tube.

e. Maintain the suction while lowering the device carefully over the specimen.

f. When the membrane stretcher is positioned centrally over the specimen, the suction is released so that the membrane clings to the specimen. Care should be taken at this point to avoid moving the membrane stretcher.

g. Roll the membrane ends gently onto the end caps, making a smooth fit with no entrapped air and carefully remove the membrane stretcher from around the specimen.

h. Hold the O-ring stretcher steady with one hand, place it over the specimen until the lower end is about level with the middle of the lower end cap, and roll off the O-rings to seal the membrane onto the lower end cap.

i. Raise the O-ring stretcher and repeat subparagraphs 13.2.14.b and 13.2.14.h to seal the top cap, then remove the O-ring stretcher.

j. Finally fold back the ends of the membrane neatly over the sealing O-rings at each end.

NOTE 2.–With soft or friable specimens, it is preferable to fit the lower end cap in place on the testing pedestal first—before placing the specimen—to minimize the amount of specimen handling.

13.2.15. If gravel or coarse sand is encountered in the cutting bit path, refer to subparagraph 7.1 for a soil substitution procedure.

13.2.16 Guidelines concerning maximum particle size in a specimen are identical to those discussed in subparagraph 13.1.16.

14. Calculations

14.1 Determine the moisture content of the material in accordance with USBR 5300.

15. Report

15.1 A report is not required for this procedure. However, pertinent information should be noted on the laboratory data forms for the specimen.

16. Reference

[1] Head, K. H., *Manual of Soil Laboratory Testing, Volume 2: Permeability, Shear Strength and Compressibility Tests*, John Wiley and Sons, New York, NY, pp. 620-621, 1982.

[1] Number in brackets refers to the reference.

APPENDIX

X1. USE OF SOIL LATHE[1]

X1.1 Scope

X1.1.1 This appendix outlines the procedure for trimming undisturbed samples using a soil lathe. It is recommended that the soil lathe be used for samples in the firm to stiff, or very stiff, consistency range. Softer clays may be subjected to excessive disturbance by this procedure, but satisfactory specimens of this type of material usually can be obtained by means of sample tubes.

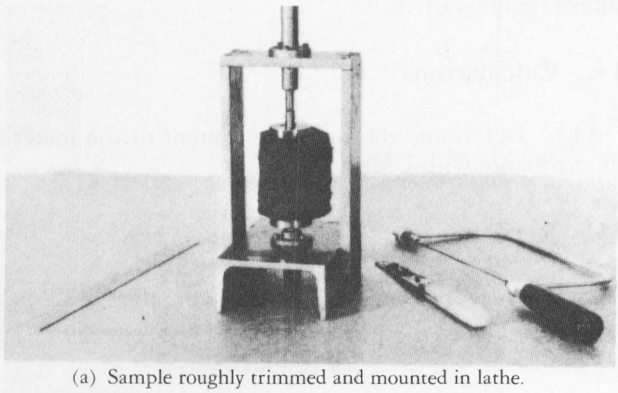

(a) Sample roughly trimmed and mounted in lathe.

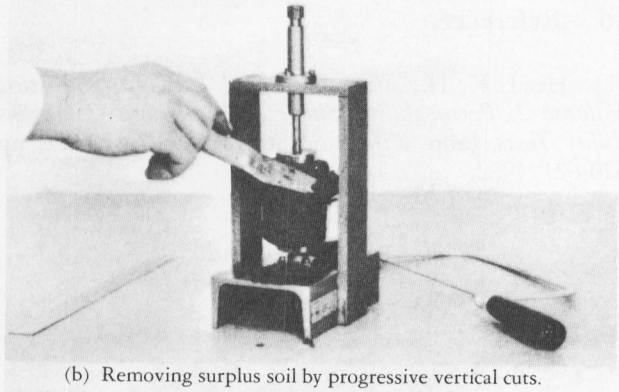

(b) Removing surplus soil by progressive vertical cuts.

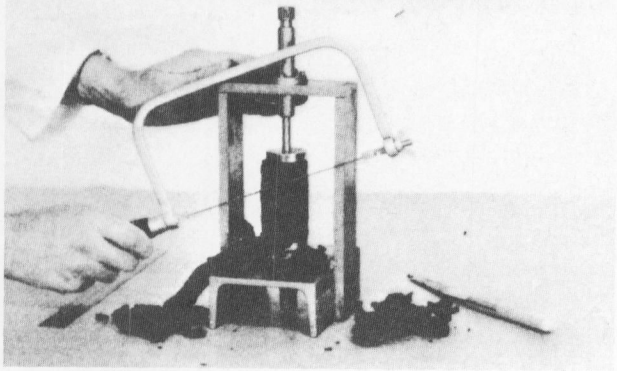

(c) Trimming to final diameter using wire saw against vertical guide plates.

Figure X1.1. – Soil lathe use.

X1.2 Procedure

X1.2.1 Roughly trim the soil sample to shape using a sharp blade or wire saw before mounting the sample in the soil lathe. The length should be somewhat longer than the required specimen length, and the end faces trimmed flat and parallel.

X1.2.2 Mount the faces of the soil sample between the platens of the lathe as shown on figure X1.1(a).

X1.2.3 Lower the upper platen of the soil lathe until it is firmly in contact with the upper surface of the soil sample.

X1.2.4 Lock the upper plate into position so that the soil sample is securely held in position.

X1.2.5 Remove surplus material progressively from the sample by means of a series of fine vertical cuts, rotating the sample slightly between each cut [fig. X1.1(b)]. For firm clays a wire saw is suitable, but for stiffer clays a sharp knife may be more effective.

X1.2.6 Avoid any tendency to cause distortion by dragging at the soil. Any stones or hard nodules should be removed carefully, and resulting cavities should be filled with fine material from the trimmings.

X1.2.7 Accurately trim the specimen to the final diameter by using the frame of the lathe as a guide for the wire saw or knife blade as shown on figure X1.1(c).

NOTE X1.1. – One type of lathe has the rotating platen mounted eccentrically so that specimens of either 1.5- or 2-inch (38- or 50-mm) diameter may be accurately prepared (fig. X1.2).

X1.2.8 Rotate the soil specimen slightly between each cut until a smooth cylindrical surface is obtained.

X1.2.9 Remove the soil specimen from the lathe, place in a trimming mold, and carefully cut the ends to give the correct length using a wire saw or a sharp blade.

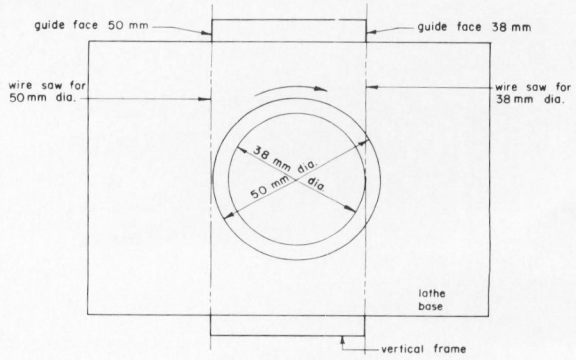

Figure X1.2. – Use of soil lathe guides for preparing either 1.5- or 2-inch (38- or 50-mm) diameter specimens.

[1] Head, K. H., *Manual of Soil Laboratory Testing, Volume 2: Permeability, Shear Strength and Compressibility Tests*, John Wiley and Sons, New York, NY, pp. 392-394, 1982.

UNITED STATES DEPARTMENT OF THE INTERIOR
BUREAU OF RECLAMATION

USBR 5300-89

PROCEDURE FOR

DETERMINING MOISTURE CONTENT OF SOIL AND ROCK BY THE OVEN METHOD

INTRODUCTION

This procedure is under the jurisdiction of the Geotechnical Services Branch, code D-3760, Research and Laboratory Services Division, Denver Office, Denver, Colorado. The procedure is issued under the fixed designation USBR 5300. The number immediately following the designation indicates the year of acceptance or the year of last revision.

1. Scope

1.1 This designation outlines the procedure for determining the moisture content of soil, rock core, and rock particles by the oven method.

1.2 This method may not provide reliable results for materials containing significant amounts of organic matter; halloysite, montmorillonite, or gypsum minerals; or materials in which the water contains dissolved solids such as salt in marine deposits.

2. Applicable Documents

2.1 *USBR Procedures*:
USBR 1012 Calibrating Balances or Scales
USBR 1020 Calibrating Ovens
USBR 3900 Standard Definitions of Terms and Symbols Relating to Soil Mechanics
USBR 5205 Preparing Soil Samples by Splitting or Quartering
USBR 5325 Performing Gradation Analysis of Gravel Size Fraction of Soils

3. Summary of Method

3.1 A test specimen is dried in an oven to a constant mass. The loss of mass due to drying is considered to be water. The moisture content is calculated using the mass of water and the mass of the dry specimen.

4. Significance and Use

4.1 The moisture content of soil or rock is used throughout geotechnical practice both in the laboratory and in the field.

4.2 For many soil types, the moisture content is one of the most significant index properties used in establishing a correlation between soil behavior and an index property.

4.3 In fine-grained (cohesive) soils, the consistency of a given soil type depends on its moisture content. The moisture content of a soil, along with its liquid and plastic limits, is used to express relative consistency or liquidity index.

4.4 The term *moisture* (or "water") as used in geotechnical engineering, is typically assumed to be "pore" or "free" water and not that which is hydrated to the mineral surfaces. Therefore, the moisture content of materials containing significant amounts of hydrated water at in situ temperatures or at temperatures less than 110 °C can be misleading.

4.5 The term *solid particles* as used in geotechnical engineering, is assumed to mean naturally occurring mineral particles that are not soluble in water. The moisture content of test specimens containing extraneous material such as cement, water soluble matter such as salt, and highly organic materials such as peat moss, normally require special treatment or a qualified definition of moisture content.

5. Terminology

5.1 Definitions are in accordance with USBR 3900. A term of particular significance is:

5.1.1 *Moisture Content* (w, %).–The ratio expressed as a percentage of: (1) the mass of water in a given soil mass, to (2) the mass of solid particles (ASTM definition).

5.2 Terms not included in USBR 3900 specific to this designation are:

5.2.1 Desiccant.–A solid chemical compound which absorbs moisture. Some commonly used desiccants are:

Anhydrous $CaSO_4$
Hydrous silica gel
$Mg(HCLO_4)_2$
$CaCL_2$

5.2.2 *Hydrated Water.*–Water which has bonded chemically to a mineral surface.

6. Apparatus

6.1 *Balances or Scales.*–The mass of a moisture content specimen can range from 5 g to 35 kg or more depending on the maximum particle size present or the specific requirements of a particular test designation (see subpar.

8.2 and 11.3). Typical balances or scales used for this designation are:

Approximate capacity		*Readable to*	
200	g	0.01	g
1000	g	0.1	g
20	kg	1	g
150	lbm	0.01	lbm

NOTE 1.–Different ranges of the same balance or scale may be used.

6.2 *Desiccator* (fig. 1).–An enclosed container, with a chemical desiccant inside, used for cooling a heated specimen while maintaining a zero moisture content.

6.3 *Drying Oven* (fig. 2).–An oven, thermostatically controlled, preferably of the forced-draft type, and capable of maintaining a uniform temperature of 230±9 °F (110±5 °C) throughout the drying chamber.

6.4 *Specimen Containers.*–Suitable containers such as pans or porcelain dishes resistant to corrosion or changes in mass when subjected to repeated cycles of heating, cooling, and cleaning.

6.5 *Container Holder.*–An asbestos glove or a device suitable for removing hot containers from an oven.

7. Precautions

7.1 *Safety Precautions.*–This designation may involve hazardous materials, operations, and equipment. Containers heated at 110 °C can cause serious burns if handled improperly. Use a container holder whenever handling hot specimen containers.

8. Test Specimens

8.1 *Specimen.*–For a determination of moisture content in conjunction with or as part of another designation, use the method of specimen selection and the specimen mass as described in that designation.

8.2 *Specimen Size.*–For a determination of moisture content—when the test specimen is a portion of a larger amount of material—the required minimum mass of the test specimen depends on the maximum particle size present in the soil as follows:

Figure 1. – Desiccator.

Figure 2. – Drying oven.

U.S.A. Standard series sieve maximum particle size		*Minimum mass of test specimen, grams*
No. 4	4.75 mm	200
3/8 in	9.5 mm	1000
3/4 in	19.0 mm	2000
1-1/2 in	37.5 mm	3000
3 inch	75 mm	3000 or more to obtain a representative specimen

8.2.1 For material with nonuniform moisture content distribution, the specimen mass should be two to four times as large as the recommended minimum value.

8.2.2 Remark on the test data form if a test specimen is used that is smaller than the recommended value.

8.2.3 In some cases, if random isolated particles are encountered—which are significantly larger than the basic material and not enough material is available to meet the minimum requirement for specimen mass—it may be appropriate not to include the large particles in the test specimen. This requires discretion and judgment based on the material and the application of the test result.

8.3 *Test Specimen Selection.*–When the test specimen is a portion of a larger amount of material, the specimen must be selected to be as representative as possible of the moisture condition of the entire amount of material. The manner in which the test specimen is selected depends on the purpose and application of the test, the type of material being tested, the moisture condition, and the type of sample (from another test, bag, tube, block, etc.).

8.3.1 For disturbed samples such as trimmings, bag samples, excavation, etc., obtain the test specimen by one of the following methods (listed in order of preference):

8.3.1.1 If the material is such that it can be manipulated and handled without significant moisture loss, the material should be mixed and then reduced to the required size by splitting or quartering in accordance with USBR 5205 except the reduction must be done at the existing moisture content.

8.3.1.2 If the material is such that it cannot be thoroughly mixed and/or split, form a stockpile of the soil and mix as much as possible. Obtain at least 5 portions of the material at random locations using a sampling tube, shovel, scoop, trowel, or similar device appropriate for the maximum particle size present in the material. Combine all the portions for the test specimen.

8.3.1.3 If the material or conditions are such that a stockpile cannot be formed, select as many portions of the material as possible at random locations that will best represent the moisture condition. Use an appropriate device as described in subparagraph 8.3.1.2. Combine all the portions for the test specimen.

8.3.2 For undisturbed (intact) samples such as blocks, tubes, split barrel, etc., obtain the test specimen by one of the following methods depending on the purpose and potential use of the sample:

8.3.2.1 Carefully trim at least 1/8 inch of material from the outer surface of the sample to see if material is layered (see subpar. 8.3.2.3) and to remove material that is drier or wetter than the main portion of the sample. Then carefully trim at least 1/4 inch, or a thickness equal to the maximum particle size present, from the entire exposed surface or from the interval being tested.

8.3.2.2 Slice the sample in half. If material is layered see subparagraph 8.3.2.3. Then carefully trim at least 1/4 inch, or a thickness equal to the maximum particle size present, from the exposed surface of one-half, or from the interval being tested. Avoid any material on the edges that may be wetter or drier than the main portion of the sample.

8.3.2.3 For a layered soil (or more than one soil type encountered), select an average specimen, or individual specimens, or both. Specimens must be properly identified as to location, what they represent, and appropriate remarks entered on data forms.

8.4 *Specimens Tested in Fractions.*–In some instances it may be necessary or desirable to test the material in two or more separate size fractions (see note 2).

8.4.1 Separate the material into two or more fractions using the appropriate sieves or by performing the sieving procedure described in USBR 5325. The data form used in USBR 5325 may be used for either case.

8.4.2 The minimum specimen mass for each fraction must conform with the requirements of subparagraph 8.2.

8.4.3 The fractions must be reduced to the required size in accordance with subparagraph 8.3.

8.4.4 In order to calculate the moisture content of the total material, the percentage (by dry mass) of each size fraction must be determined in accordance with the principles of USBR 5325.

NOTE 2.–For easy handling or in preparation for other tests, separating the material into fractions may be desirable if only a few random significantly larger particles are present—if particles 5 inches in diameter or larger are encountered. Since only 200 g is needed for a specimen of minus No. 4 material, separating on the No. 4 sieve may be advantageous to conserve the minus No. 4 material.

9. Calibration and Standardization

9.1 Verify that equipment is currently calibrated in accordance with the applicable calibration procedure. If the calibration is not current, perform the calibration before using the equipment for this procedure.

USBR 1012 Calibrating Balances or Scales
USBR 1020 Calibrating Ovens

10. Conditioning

10.1 The test specimens should be prepared and processed as quickly as possible to minimize unrecorded moisture loss which would result in an erroneous moisture content determination for the test specimen.

11. Procedure

11.1 All data are to be recorded on the "Moisture Content" form as shown on figure 3 or the appropriate portion of various other forms or data sheets used for specific procedures.

11.2 Assign or locate and record the sample number.

11.3 Based on the total wet mass of the specimen, determine and record all measurements of mass to the minimum increment of mass as follows:

Specimen wet mass	*Minimum increment of mass*
0 to 100 g	0.01 g
100 to 1000 g	0.1 g
1000 to 10 000 g	1 g
10 to 100 kg	10 g or 0.01 kg
0 to 150 lbm	0.01 lbm
150 to 300 lbm	0.1 lbm
300 lbm and larger	0.1% of the mass being determined

NOTE 3.–Other test designations may have different requirements based on use or required accuracy of a specific procedure.

11.4 Determine and record the mass of the container.

11.5 Place the test specimen (as prepared in accordance with subpar. 8.1) in the container.

11.6 Determine and record the mass of the wet specimen and container.

11.7 Place the specimen and container in a drying oven at 110 °C. (see note 4.)

11.8 Keep the specimen in the drying oven for a minimum of 16 hours or until a constant mass is attained. (See notes 4, 5, and 6.)

11.8.1 Rock core and large particles of rock, especially those having a dimension larger than 2 inches, will require greater time for the moisture to travel from the interior of the core or particle to the surface. (See note 5.)

11.8.2 For rock mechanics work, at least two measurements of mass should be made (typically at 24 and 48 hours) to determine if a constant mass has been attained.

11.9 Remove the specimen and container from the oven.

11.10 Allow the specimen and container to cool to room temperature or until the container can be handled comfortably with bare hands and operation of the balance or scale will not be affected by convection currents. Determine and record the mass of the container and ovendried material.

11.10.1 For smaller specimens, cooling in a desiccator is recommended since it prevents absorption of moisture from the atmosphere during cooling.

NOTE 4.–For materials containing gypsum or other minerals having significant amounts of hydrated water or for soil containing a significant amount of organic material, alternate methods of drying may need to be used. In many cases, and depending on the intended use for these types of materials, it may be more applicable to maintain the drying oven at 60 ±5 °C or use a vacuum desiccator at a vacuum of approximately 133 pascals (10 mm Hg) and at a temperature ranging between 23 and 60 °C for drying. If either of these drying methods are used, it should be noted in the report of the test results.

NOTE 5.–The time required to obtain constant mass will vary depending on the type of material, size of specimen, oven type and capacity, and other factors. The influence of these factors generally can be established by good judgment and experience with the materials being tested and the apparatus being used. In most cases, drying a test specimen over night (about 16 hours) is sufficient. In cases where there is doubt concerning the adequacy of drying, drying should be continued until the mass after two successive periods (at least 1 hour, preferably, 3 h) of drying indicate an insignificant change (less than about 0.1%). Specimens of sand may often be dried to constant mass in a period of about 4 hours, when forced-draft oven is used.

NOTE 6.–Dry material may absorb moisture from wet specimens; therefore, it is recommended that the dried specimens be removed before placing wet samples in the oven. This is not necessary if the specimens are to be ovendried for an additional 16-hour period.

11.11 Determine and record the mass of the container and dry specimen.

11.12 Calculate and record the mass of water contained in the specimen.

11.13 Calculate and record the mass of the dry specimen.

11.14 Calculate and record to the nearest 0.1 percent the moisture content.

12. Calculations

12.1 Determine the moisture content of the material.

$$m_w = m_1 - m_2 \quad (1)$$

$$m_s = m_2 - m_c \quad (2)$$

$$w = 100 \left(\frac{m_w}{m_s} \right) \quad (3)$$

where:

m_w = mass of water, g, kg, or lbm
m_1 = mass of container and wet specimen, g, kg, or lbm
m_2 = mass of container and dry specimen, g, kg, or lbm
m_s = mass of dry specimen, g, kg, or lbm
m_c = mass of container, g, kg, or lbm
w = moisture content, %
100 = convert from decimal to percent

12.2 If the total material was separated into fractions, calculate the moisture content for the total material.

$$w = \frac{P_1 w_1}{100} + \frac{P_2 w_2}{100} + \ldots + \frac{P_n w_n}{100} \quad (4)$$

where:

w = moisture content of total material, %
P_1, P_2, P_n = percent of each size fraction in total material, %
w_1, w_2, w_n = moisture content of each size fraction, %
100 = constant representing total material, %

13. Report

13.1 The report is to consist of a completed and checked "Moisture Content" form (fig. 3) or the appropriate portion of data forms used in other procedures.

13.2 All calculations are to show a checkmark.

7-1452 (9-86) Bureau of Reclamation	MOISTURE CONTENT	Designation USBR 5300- 89

PROJECT	FEATURE
Example	Example

TESTED BY	DATE	COMPUTED BY	DATE	CHECKED BY	DATE

					UNITS
SAMPLE NUMBER	1	2			
CONTAINER NUMBER	15	20			
DATE PLACED IN OVEN	9/8/89	9/8/89			
MASS OF CONTAINER + WET SPECIMEN	366.1	374.6			☒ g
MASS OF CONTAINER + DRY SPECIMEN	348.0	342.1			
MASS OF CONTAINER	129.4	118.0			☐ kg
MASS OF WATER	18.1	32.5			
MASS OF DRY SPECIMEN	218.6	224.1			☐ lbm
MOISTURE CONTENT (%)	8.3	14.5			

TESTED BY	DATE	COMPUTED BY	DATE	CHECKED BY	DATE

					UNITS
SAMPLE NUMBER					
CONTAINER NUMBER					
DATE PLACED IN OVEN					
MASS OF CONTAINER + WET SPECIMEN					☐ g
MASS OF CONTAINER + DRY SPECIMEN					
MASS OF CONTAINER					☐ kg
MASS OF WATER					
MASS OF DRY SPECIMEN					☐ lbm
MOISTURE CONTENT (%)					

TESTED BY	DATE	COMPUTED BY	DATE	CHECKED BY	DATE

					UNITS
SAMPLE NUMBER					
CONTAINER NUMBER					
DATE PLACED IN OVEN					
MASS OF CONTAINER + WET SPECIMEN					☐ g
MASS OF CONTAINER + DRY SPECIMEN					
MASS OF CONTAINER					☐ kg
MASS OF WATER					
MASS OF DRY SPECIMEN					☐ lbm
MOISTURE CONTENT (%)					

GPO 851-688

Figure 3. - Moisture content — example.

UNITED STATES DEPARTMENT OF THE INTERIOR
BUREAU OF RECLAMATION

USBR 5305-89

PROCEDURE FOR

DETERMINING MOISTURE CONTENT OF SOILS USING THE MOISTURE TELLER DEVICE

INTRODUCTION

This procedure is under the jurisdiction of the Geotechnical Services Branch, code D-3760, Research and Laboratory Services Division, Denver Office, Denver, Colorado. The procedure is issued under the fixed designation USBR 5305. The number immediately following the designation indicates the year of acceptance or the year of last revision.

1. Scope

This designation outlines the procedure for performing moisture content determinations of soil using the Moisture Teller device. A Moisture Teller can be used to determine more rapidly—although less accurately—soil moisture content than by the oven method (USBR 5300). The Moisture Teller can be used when a moisture content of ±1 percentage point of the ovendried moisture content is acceptable for use. The Moisture Teller may be used for most soils, except for soils with liquid limits (LL) equal to or greater than 50, peat (Pt), or other highly organic soils. The Moisture Teller method of determining moisture content is limited to soils, or the portion of a soil, passing the U.S.A. Standard series No. 4 (4.75-mm) sieve.

NOTE 1.–The term "Moisture Teller" is a commercial name for a moisture testing device.[1]

2. Auxiliary Tests

2.1 A test sample must be obtained in accordance with USBR 5205 prior to performing this procedure. A more accurate method (USBR 5300) for determining moisture content must be used periodically to check the performance of the Moisture Teller device.

3. Applicable Documents

3.1 *USBR Procedures*:
USBR 3900 Standard Definitions of Terms and Symbols Relating to Soil Mechanics
USBR 5000 Determining Unified Soil Classification (Laboratory Method)
USBR 5005 Determining Unified Soil Classification (Visual Method)
USBR 5205 Preparing Soil Samples by Splitting or Quartering
USBR 5300 Determining Moisture Content of Soil and Rock by the Oven Method

3.2 *ASTM Standard*:
E 11 Specification for Wire Cloth Sieves for Testing Purposes

[1] Number in brackets refers to the reference.

4. Summary of Method

4.1 A specimen of wet soil is placed into a sample pan. The mass of wet soil specimen and the sample pan is determined. The specimen and pan are placed in the Moisture Teller. The Moisture Teller produces a rapidly moving stream of hot air which is directed at the soil specimen. The hot air dries the soil in a few minutes. The mass of the dry soil specimen and sample pan is determined, and the moisture content of the soil specimen is calculated.

5. Significance and Use

5.1 The Moisture Teller is used as a quick-drying method to determine soil moisture content more rapidly—although less accurately—than by the ovendrying method and when moisture contents within ±1 percentage point of the ovendried moisture content are adequate for use.

5.1.1 For more accurate moisture content determinations, the ovendrying method (USBR 5300) must be used.

5.2 Before the Moisture Teller is used on a routine basis, the moisture content of a representative sample of each soil type, which may be encountered on a particular project, should be initially determined using the oven method (USBR 5300).

5.2.1 If the moisture content—as determined by the Moisture Teller—varies more than 1 percentage point from the moisture content as determined using the oven method, it is recommended that the Moisture Teller device not be used for that particular soil type.

5.2.2 Soil type refers to the Unified Soil Classification System symbol for a given soil (USBR 5000 or 5005).

5.3 The moisture content as determined by the Moisture Teller device should be verified against the oven method soil moisture content at least once every year or 1000 tests, whichever occurs first.

5.3.1 A particular soil should be retained and used for succeeding verifications. An adequate supply of this soil must be stored, and marked appropriately, for future use.

5.3.2 Compare the most recent moisture content determination verification results to results previously

determined. If the Moisture Teller moisture contents are 2 percentage points or more different than the previous determinations, the Moisture Teller probably should not be used for that soil and/or the device should be checked for proper operation.

6. Terminology

6.1 Definitions are in accordance with USBR 3900.

7. Apparatus

7.1 *General Apparatus*:

7.1.1 *Sieve.*–U.S.A. Standard series No. 4 (4.75 mm) conforming to the requirements of ASTM E 11.

7.1.2 *Bags.*–Moistureproof, plastic.

7.1.3 *Voltage.*–Supply 115 or 230 V a.c., 50/60 hertz.

7.1.4 *Balance or Scale.*–A typical balance or scale used for this designation must be readable to 0.1 g and have a capacity of about 500 g.

7.1.5 *Desiccator.*–An enclosed container with a chemical desiccant inside used for cooling a heated soil sample while maintaining zero moisture content change.

7.1.6 *Mixing pans.*–Metal pans of suitable size to contain and mix sample.

7.2 *Equipment Unique to This Procedure* (fig. 1):

7.2.1 *Moisture Teller Device.*–Equipped with an adjustable thermostatic regulator, armored thermometer, and timer. The Moisture Teller has an overall height of 20 inches (500 mm), base of 10 by 12 inches (250 by 300 mm), and a net mass of 16 lbm (7.3 kg).

7.2.2 *Sample Pan.*–Pans with wire mesh (described by manufacturer as "500 mesh") bottoms for holding soil specimen.

7.2.3 *Pan Lifter.*–For handling hot pans.

7.2.4 *Soft Brush.*–For cleaning wire cloth pan bottoms.

7.2.5 *Filter Paper Disks.*–Disks 5-1/4-inches (133 mm) diameter; available in packs of 100 from the manufacturer of the Moisture Teller equipment.

8. Precautions

8.1 *Safety Precautions.*–Before connecting the Moisture Teller to an electric outlet, check the motor nameplate to assure specified voltage and frequency are the same as the supply line being used.

8.2 *Technical Precautions*:

8.2.1 Be sure the thermostat control is preset at the desired temperature.

8.2.2 Once the soil specimen is placed in the sample pan, any undue delay will cause unrecorded loss of moisture and could lead to inaccurate results.

8.2.3 After testing is completed, it is imperative that the hot sample pan and specimen quickly be placed in the disiccator, or moisture from the atmosphere will be absorbed into the specimen.

8.2.4 Let hot sample pan cool before reuse. It is almost impossible to avoid unrecorded moisture loss if a hot sample pan is used.

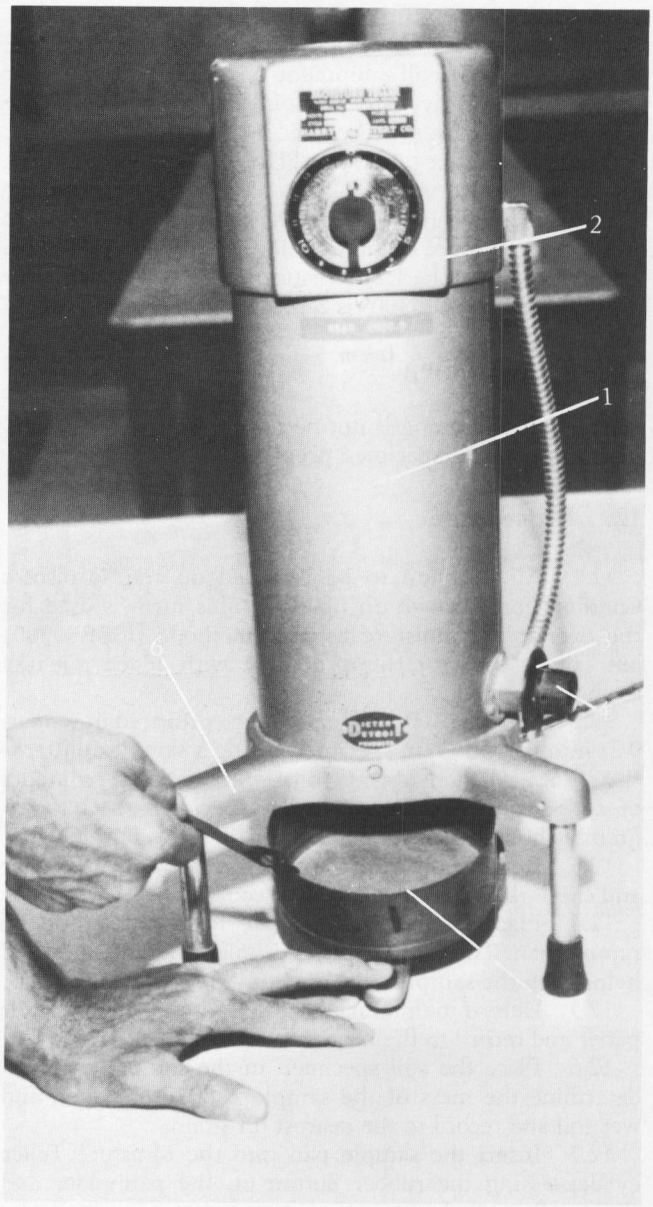

Figure 1. – Moisture Teller with accessory equipment. 1) Moisture Teller device, 2) timer, 3) adjustable thermostat , 4) thermometer, 5) pan holder, and 6) pan lifter.

9. Sampling, Test Specimens, and Test Units

9.1 *Sample Preparation*:

9.1.1 Prepare a test sample of at least 100 grams in accordance with USBR 5205.

9.2 *Specimen Preparation*:

9.2.1 Pass the 100-gram sample through a No. 4 (4.75-mm) sieve, and thoroughly mix the minus No. 4 sieve-size material to ensure an even distribution of moisture throughout.

9.2.2 If the mixed soil is not tested immediately, it should be stored in moistureproof plastic bags.

10. Calibration and Standardization

10.1 Verify that all equipment—excluding the Moisture Teller—is currently calibrated in accordance with the applicable calibration procedure. If the calibration is not current, perform the calibration before using the equipment for this procedure.

10.2 Manufacturer's literature suggests the Moisture Teller does not need calibration nor reference to standards.

10.3 Periodic check of Moisture Teller performance (as compared to USBR 5300) is recommended.

11. Conditioning

11.1 Conditioning is not necessary if the soil is tested immediately after specimen preparation.

12. Procedure

12.1 All data are to be recorded on the "Moisture Content" form shown on figure 2. This form is used for the ovendrying moisture content method (USBR 5300) but can be used for this procedure with added remarks as shown.

12.2 Split the 100-gram specimen (prepared in subpar. 9.2) into two 50-gram specimens using a sample splitter.

12.2.1 When testing soils, with moisture contents of 20 percent or more, a smaller specimen (such as 25 grams) should be used.

12.3 Remove the sample pan from the Moisture Teller and check that it is clean, dry, and cool.

12.4 Place a disk of filter paper in the bottom of the sample pan. The filter paper minimizes loss of fines and helps keep the sample pan clean.

12.5 Determine the mass of the sample pan and filter paper and record to the nearest 0.1 gram.

12.6 Place the soil specimen in the sample pan, and determine the mass of the sample pan, filter paper, and wet soil and record to the nearest 0.1 gram.

12.7 Insert the sample pan into the Moisture Teller by depressing the rubber button on the panholder and sliding the sample pan in so that it rests evenly in the holder. Release the panholder and make sure that the top of the sample pan fits snugly against the body of the Moisture Teller.

12.8 Set the thermostat control to a setting corresponding to about 300 °F (150 °C).

12.9 Start the Moisture Teller by turning the timer pointer to the desired drying time.

12.9.1 Recommended minimum drying times:

Clean sands (less than 5% fines) .... 5 minutes
Silty or clayey soils ..... 15 minutes

12.9.2 Some soils may take longer to dry. When a particular soil type is first tested, the minimum drying time should be established. After drying for the minimum time in accordance with subparagraph 12.9.1, perform steps in subparagraphs 12.7 through 12.12; then redry for 2 to 5 minutes. Repeat steps in subparagraphs 12.7 through 12.12 to note if further moisture loss occurs. This sequence is continued until additional loss of moisture can not be measured. The total elapsed time then should be used for all subsequent testing for that soil type.

12.10 When the timer turns off the Moisture Teller, remove the sample pan using the pan lifter.

12.11 Place the sample pan into the desiccator to cool.

12.12 Determine the mass of the sample pan, filter papers, and dry soil and record to the nearest 0.1 gram.

12.13 Calculate and record the moisture content.

12.14 After each test, empty the sample pan and brush out any adhering material. *Do not rap the sample pan on the bench or table.*

12.15 Let the hot pan cool before reuse. It is almost impossible to avoid unrecorded moisture loss when a hot pan is used.

13. Calculations

13.1 Calculate the moisture content.

$$w = 100 \left(\frac{A - B}{B - C} \right)$$

where:

w = moisture content, %
A = mass of sample pan, filter paper, and wet soil, g
B = mass of sample pan, filter paper, and dried soil, g
C = mass of sample pan and filter paper, g
100 = convert from decimal to percent

14. Report

14.1 The report is to consist of a completed and checked "Moisture Content" form (fig. 2).

14.2 All calculations are to show a checkmark.

15. Reference

[1] "No. 276 Moisture Teller Instructions," Harry W. Dietert Company, 9330 Roselawn, Detroit MI 48204, October 1982.

7-1452 (9-86) Bureau of Reclamation	MOISTURE CONTENT	Designation USBR 5300-

PROJECT	FEATURE
Example	Moisture Teller Device USBR 5305-89

TESTED BY	DATE	COMPUTED BY	DATE	CHECKED BY	DATE

					UNITS
SAMPLE NUMBER	1	2	3		
CONTAINER NUMBER	36	37	38		
DATE PLACED IN OVEN	12/15	12/15	12/15		
MASS OF CONTAINER + WET SPECIMEN *	250.2	258.6	247.5		[X] g
MASS OF CONTAINER + DRY SPECIMEN *	240.4	245.6	241.3		
MASS OF CONTAINER + FILTER PAPER *	190.4	191.0	189.9		[ ] kg
MASS OF WATER	9.8	13.0	6.2		
MASS OF DRY SPECIMEN	50.0	54.6	51.4		[ ] lbm
MOISTURE CONTENT (%)	19.6	23.8	12.1		

TESTED BY	DATE	COMPUTED BY	DATE	CHECKED BY	DATE

					UNITS
SAMPLE NUMBER					
CONTAINER NUMBER					
DATE PLACED IN OVEN					[ ] g
MASS OF CONTAINER + WET SPECIMEN					
MASS OF CONTAINER + DRY SPECIMEN					[ ] kg
MASS OF CONTAINER					
MASS OF WATER					[ ] lbm
MASS OF DRY SPECIMEN					
MOISTURE CONTENT (%)					

TESTED BY	DATE	COMPUTED BY	DATE	CHECKED BY	DATE

					UNITS
SAMPLE NUMBER					
CONTAINER NUMBER					
DATE PLACED IN OVEN					[ ] g
MASS OF CONTAINER + WET SPECIMEN					
MASS OF CONTAINER + DRY SPECIMEN					[ ] kg
MASS OF CONTAINER					
MASS OF WATER					[ ] lbm
MASS OF DRY SPECIMEN					
MOISTURE CONTENT (%)					

GPO 851-688

Figure 2. - Moisture content — using the Moisture Teller.

UNITED STATES DEPARTMENT OF THE INTERIOR
BUREAU OF RECLAMATION

USBR 5310-89

PROCEDURE FOR

DETERMINING MOISTURE CONTENT OF SOILS USING THE CALCIUM CARBIDE REACTION DEVICE

INTRODUCTION

This procedure is under the jurisdiction of the Geotechnical Services Branch, code D-3760, Research and Laboratory Services Division, Denver Office, Denver, Colorado. The procedure is issued under the fixed designation USBR 5310. The number immediately following the designation indicates the year of acceptance or the year of last revision.

1. Scope

1.1 This designation outlines the procedure for determining the moisture content of soils using the CCRD (calcium carbide reaction device).

1.2 A CCRD can be used to determine the moisture content of certain soils when not enough time is available to use the oven method (USBR 5300), and when a moisture content value within ±1 percent of the ovendried moisture content is acceptable.

1.3 The CCRD should not be used for peat (Pt) or other highly organic soils.

1.4 The CCRD method of determining moisture content is limited to soils, or the portion of a soil, passing the U.S.A. Standard series No. 4 (4.75-mm) sieve, and to soils with a moisture content of 40 percent or less.

1.5 Experience has shown that lower CCRD moisture contents are obtained when operating at ambient air temperatures below 55 °F.

2. Auxiliary Tests

2.1 A test sample must be obtained in accordance with USBR 5205 prior to performing this procedure. The oven method (USBR 5300) for determining moisture content should be used to check periodic performance of the CCRD.

3. Applicable Documents

3.1 *USBR Procedures*:

USBR 1060 Calibrating the Calcium Carbide Reaction Device

USBR 3900 Standard Definitions of Terms and Symbols Relating to Soil Mechanics

USBR 5205 Preparing Soil Samples by Splitting or Quartering

USBR 5300 Determining Moisture Content of Soil and Rock by the Oven Method

3.2 *ASTM Standard*:

E 11 Specification for Wire-Cloth Sieves for Testing Purposes

4. Summary of Method

4.1 A prescribed amount of calcium carbide reagent and two steel balls are placed into the chamber of the CCRD. The soil specimen is placed in the cap, and the cap is inserted in the end of the pressure vessel and sealed. The CCRD with soil, reagent, and steel balls is rotated manually for 3 minutes. The moisture in the soil reacts with the calcium carbide to produce a specific volume of acetylene gas. The gas pressure is read on a pressure gauge located on one end of the pressure vessel. The gauge is calibrated to read in percentage of moisture based on the wet mass of the soil specimen. The moisture content based on dry mass is obtained from a calibration curve (or equation or table) that is unique for each device and each soil type.

5. Significance and Use

5.1 A CCRD can be used to determine moisture content of certain soils when (1) not enough time is available to use the oven method, and (2) moisture content values within ±1 percent of the ovendried moisture content are acceptable.

5.1.1 For more accurate moisture content determinations, the oven-drying method (USBR 5300) must be used.

5.2 Normally, a calibration table is supplied with the CCRD. However, to obtain accurate moisture content values, a calibration plot or equation must be prepared in accordance with USBR 1060 for each individual device and for each soil type to be tested.

5.2.1 "Soil type" means soils that have different Unified Soil Classification System symbols.

6. Terminology

6.1 Definitions are in accordance with USBR 3900.

7. Apparatus

7.1 *General Apparatus*:

7.1.1 *Sieves.*–U.S.A. Standard series No. 4 (4.75 mm) sieve conforming to the requirements of ASTM E 11.

7.1.2 *Bags.*–Moistureproof, plastic, 10- by 10-inch or any convenient medium-sized bags.

7.2 *Equipment Unique to This Procedure* (fig. 1):

7.2.1 *CCRD.*–The CCRD is a hollow aluminum pressure vessel having a pressure gauge on one end and a cap with a clamping arrangement on the other.

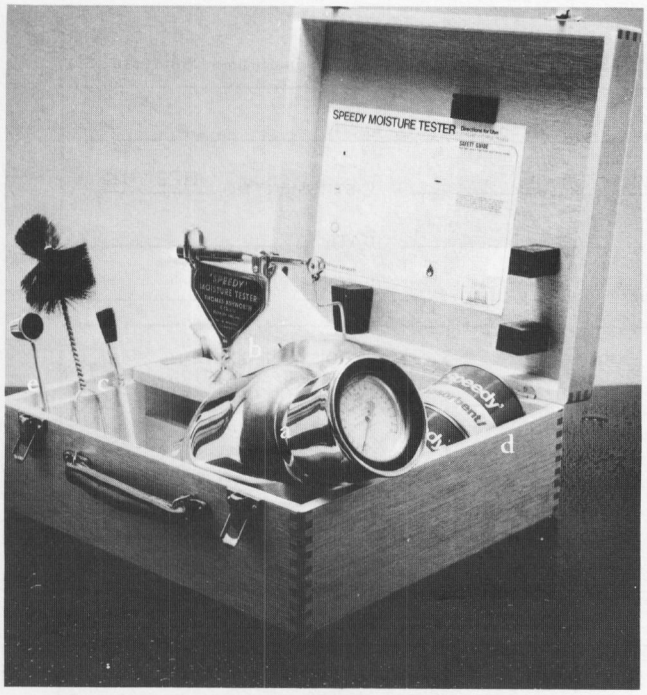

Figure 1. – Calcium carbide reaction device and accessory equipment, (a) CCRD, (b) brass beam balance, (c) cleaning brushes, (d) calcium carbide reagent, and (e) standard measuring scoop.

7.2.2 *Balance.*–Each CCRD kit comes complete with a brass beam balance. The weighing device consists of a rigid, uniformly dense beam, horizontally suspended by a low-friction support located slightly off center that balances when the small specimen pan with 26 grams of soil is suspended from one end of the beam.

7.2.3 *Standard Measuring Scoop.*–Measures 7-1/3 grams of calcium carbide.

7.2.4 *Steel Balls.*–Two 1-1/4-inch diameter steel balls to facilitate mixing of soil and calcium carbide reagent.

7.2.5 *Half-Specimen Balancing Mass.*–A small brass mass (half the standard mass).

7.3 *Optional Equipment*:

7.3.1 *Balance or Scale.*–A typical balance or scale used for this designation must be readable to 0.1 g and have a capacity of about 200 g.

8. Reagent and Materials

8.1 *Calcium Carbide* (CaC_2).–Use only small grain-size reagents (finely ground). The reagent is available from the source for the CCRD and usually must be purchased as a carton of 24 1-lbm cans.

9. Precautions

9.1 *Safety Precautions*:

9.1.1 Calcium carbide (CaC_2) reagent used in the CCRD produces acetylene gas when it reacts with water from moist soil. The CCRD must be used outdoors or in a well-ventilated area. Inhalation of acetylene for prolonged periods in a confined, unventilated area can be detrimental to health.

9.1.2 After testing, the built-up pressure within the CCRD should be released away from a person's body or face, and in a downwind direction.

9.1.3 After several successive tests have been performed, the exterior of the CCRD becomes hot and gloves are recommended for protection.

9.1.4 Acetylene gas, when under pressure, is extremely flammable. Tests should be performed clear of electrical sparking, and smoking or open flame should not be permitted in the testing area. If a fire results, water should *not* be used to put out the fire. A blanket or an ABC class dry chemical fire extinguisher should be used.

CAUTION: This procedure requires use of hazardous materials. It is the responsibility of the person using this procedure to establish appropriate safety practices and to determine, prior to use, the applicability of regulatory limitations.

9.1.5 Calcium carbide should be stored in a locked, moisture-proof container.

9.1.6 Federal regulations require that calcium carbide reagents be shipped only by surface motor truck freight in the United States.

10. Sampling, Test Specimens, and Test Units

10.1 *Sample Preparation*:

10.1.1 Prepare a test sample in accordance with USBR 5205.

10.1.2 Pass the material through a No. 4 sieve, and mix thoroughly to ensure even distribution throughout the material.

10.2 *Specimen Preparation*:

10.2.1 If specimens are not tested immediately, the soil should be stored in moistureproof, plastic bags.

10.2.2 Using the balance, obtain a 26-gram test specimen from the soil sample to be tested. If the sample is well mixed and homogeneous, a scoop of material from the sample can be used. Otherwise, split the sample to a 26-gram size specimen using quartering techniques or a sample splitter.

11. Calibration and Standardization

11.1 Verify that equipment is currently calibrated in accordance with the applicable calibration procedure. If the calibration is not current, perform the calibration before using the equipment for this procedure.

12. Conditioning

12.1 Conditioning is not necessary; soil samples as described in subparagraph 10.1 or 10.2 may be tested immediately.

13. Procedure — Use of 26-Gram CCRD

13.1 All data are to be recorded on the "Determining Moisture Content of Soils Using the Calcium Carbide Reaction Device" form as shown on figure 2.

7-2352 (12-86) Bureau of Reclamation	DETERMINING MOISTURE CONTENT OF SOILS USING THE CALCIUM CARBIDE REACTION DEVICE	Designation USBR 5310-89

PROJECT Example FEATURE Example

SAMPLE NO. 60N CLASSIFICATION SYMBOL ML INSTRUMENT NO. 8225-14

CALIBRATION EQUATION y=1.196x+0.02 DATE

TESTED BY DATE CHECKED BY DATE

SAMPLE NO. (1)	NOMINAL SPECIMEN SIZE (g) (2)*	DIAL GAUGE READING ON CCRD (3)	CORRECTED READING (4)**	MOISTURE CONTENT FROM CALIBRATION CURVE (%) (5)
60N-8	26	9.0	9.0	10.8
-12	26	10.5	10.5	12.6
-20	26	16.5	16.5	19.8
-24	26	17.7	17.7	21.2
-28	13 (half-size)	10.3	20.6	24.7
-30	13 (half-size)	11.3	22.6	27.0
60N-108	26	9.6	9.6	11.5
-112	26	11.4	11.4	13.7

*If the moisture content of the full specimen exceeds the limit of the CCRD, a half-size specimen is used.

**If (2) = half-size specimen, (4) = (3) X 2.
If (2) = full-size specimen, (4) = (3)

AUXILIARY TESTS: USBR 5205-89
USBR 1060-89

GPO 855-019

Figure 2. – Determining moisture content of soils using the calcium carbide reaction device — example.

13.2 The following procedures are for the 26-gram size CCRD. If the 6- or 142-gram CCRD is used, substitute the appropriate amount of reagent and soil according to manufacturer's instructions.

13.3 Place three measures (about 22 grams) of calcium carbide and the two 1-1/4-inch diameter steel balls in the pressure chamber of the CCRD. The pressure chamber should be in a horizontal position when the steel balls are placed so they will not drop onto and damage the pressure gauge orifice.

13.4 Using the balance, obtain a 26-gram test specimen from the soil sample to be tested in accordance with subparagraph 10.2.

13.4.1 If the moisture content of the soil exceeds the limit of the CCRD, use a one-half size (13-gram) specimen and double the CCRD gauge reading.

13.4.2 When determining the mass of a one-half size specimen, a manufacturer-supplied brass mass (one-half the standard mass) is hooked through the link holding the scale pan cradle or is hung on the edge of the scale pan and the mass of the specimen is determined in the normal manner.

13.5 Place the soil specimen in the CCRD cap. With the pressure vessel in a horizontal position, insert the cap into the pressure vessel and tighten the clamp to seal the cap to the unit.

13.6 Raise the CCRD to a vertical position so the soil in the cap drops into the pressure vessel.

13.7 Holding the CCRD horizontally, manually rotate the device for 10 seconds so the steel balls are put into motion around the inside circumference; then rest for 20 seconds. The steel balls facilitate mixing of soil particles with reagent to maximize their reaction. Repeat the rotate-rest cycle for 3 minutes. Do not allow the steel balls to fall against either the cap or the orifice leading to the pressure gauge because this might damage the pressure gauge.

13.8 After 3 minutes of the rotate-rest intervals, read the CCRD pressure gauge and record on figure 2. The pressure gauge should be read at eye level in a horizontal position. Determine the moisture content of the soil on a dry-mass basis from the calibration form or calibration equation and record on figure 2.

13.9 Release the pressure away from a person's body or face and in a downward direction. Unclamp and remove the cap; empty and clean the device.

13.10 *Directions for Cleaning Apparatus*:

13.10.1 Between each test, the pressure vessel should be inverted and lightly tapped with the palm of the hand or shaken to expel the soil and reagent mixture.

13.10.2 The interior of the cap should be wiped clean with a clean brush or towel to remove any residual material.

14. Calculations or Interpretation of Results

14.1 The relationship between CCRD readings and ovendried moisture content based on dry mass for each soil type may be expressed in graphical form (calibration curve), represented by a table of values, and expressed as an equation.

14.1.1 Use of a calibration equation is illustrated. If the calibration equation for a particular soil is:

$$Y = 0.1 + 1.2\,X$$

where:

Y = ovendried moisture content
X = CCRD gauge reading

A CCRD reading of 15 has been obtained and an ovendried moisture content is required. Using the example calibration equation:

$Y = 0.1 + 1.2\,X$
$Y = 0.1 + 1.2\,(15)$
$Y = 18.1$ percent, ovendried moisture content.

14.1.2 A calibration plot is illustrated on figure 3.

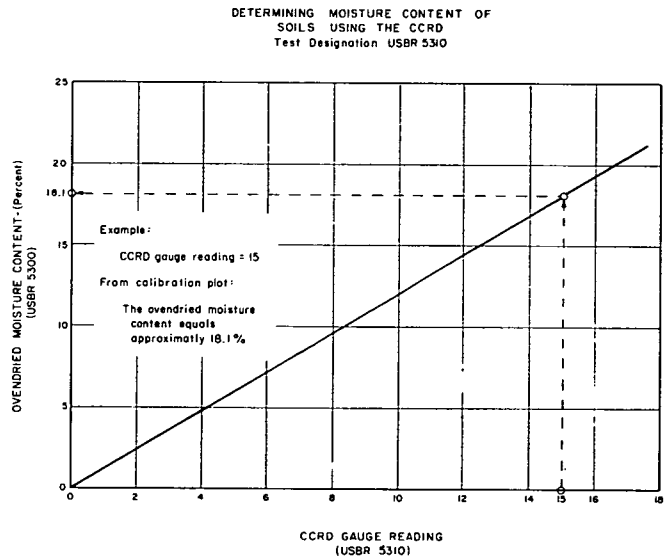

Figure 3. – CCRD calibration plot — example.

14.1.3 Tabular values are used to obtain an ovendried moisture content as follows:

CCRD reading	*Ovendried moisture content, %*
0	0.1
2	2.5
4	4.9
6	7.3
8	9.7
10	12.1
12	14.5
14	16.9
16	19.3
18	21.7

At a CCRD reading = 15, a value is not given; therefore, a linear interpolation is necessary. Set up a ratio:

CCRD reading	*Ovendried moisture content, %*
14	16.9
15	*X* wanted
16	19.3

$$\frac{15 - 14}{16 - 14} = \frac{X - 16.9}{19.3 - 16.9}$$

$$X = \frac{(15 - 14)(19.3 - 16.9)}{(16 - 14)} + 16.9$$

X = 18.1 percent ovendried moisture content

15. Report

15.1 The report is to consist of a completed and checked "Determining Moisture Content of Soils Using the Calcium Carbide Reaction Device" form (fig. 2).

15.2 All calculations are to show a checkmark.

16. Background References

Blystone, J. R., A. Pelzner, G. P. Steffens, "Moisture Content Determination by the Calcium Carbide Gas Pressure Method," Bureau of Public Roads, vol. 31, No. 8, pp. 177-181, June 1961.

"Speedy" Moisture Tester Procedure, Alpha-Lux Company, Philadelphia, Pennsylvania.

Luehring, R. W., Memorandum to Geotechnical Branch Files, Attention: D-1542, Subject: "Speedy" Moisture Tester Calibration—Instrument No. 8225-14—Statistical Analysis Procedure—Mirdan Canal—Pick-Sloan Missouri Basin Program, Nebraska," Geotechnical Branch Memorandum Reference No. 82-82, Bureau of Reclamation, Denver, Colorado, November 1, 1982.

UNITED STATES DEPARTMENT OF THE INTERIOR
BUREAU OF RECLAMATION

USBR 5315-89

PROCEDURE FOR

DETERMINING MOISTURE CONTENT OF SOILS BY THE MICROWAVE OVEN METHOD

INTRODUCTION

This procedure is under the jurisdiction of the Geotechnical Services Branch, code D-3760, Research and Laboratory Services Division, Denver Office, Denver, Colorado. The procedure is issued under the fixed designation USBR 5315. The number immediately following the designation indicates the year of acceptance or the year of last revision.

1. Scope

1.1 This designation outlines a procedure for determining the moisture content of soils using a microwave oven. It is not intended as a replacement for moisture determination using the conventional oven method, USBR 5300, but rather as a supplement when more rapid results are required to expedite other phases of testing.

1.2 The method is best suited for minus No. 4 (4.75 mm) material. Larger size particles can be tested; however, care must be taken because of the increased chance of particle shattering.

1.3 The method is applicable for most soil types; however, some may behave adversely such as those containing minerals with a high attraction to microwave energy or those which have high organic contents.

2. Applicable Documents

2.1 *USBR Procedures*:
USBR 1012 Calibrating Balances or Scales
USBR 1020 Calibrating Ovens
USBR 3900 Standard Definitions of Terms and Symbols Relating to Soil Mechanics
USBR 5205 Preparing Soil Samples by Splitting or Quartering
USBR 5300 Determining Moisture Content of Soil and Rock by the Oven Method

3. Summary of Method

3.1 A wet soil specimen is placed in a suitable container and its mass is determined. The container with soil is placed in a microwave oven, subjected to an interval of drying, and is removed from the oven and reweighed. Increments of drying and reweighing are repeated until the mass becomes nearly constant. The difference between the mass of the wet specimen and the mass of the dried specimen is considered the mass of water originally contained in the specimen. The moisture content is determined using this value.

4. Significance and Use

4.1 The moisture content of a soil is used throughout geotechnical practice both in the laboratory and in the field. USBR designation 5300 for determining moisture content requires a long period of time, and there are occasions when a more rapid method is required. The use of a microwave oven is one such method.

4.2 Principal objection to use of a microwave oven for moisture content determination has been the possibility of overheating the soil, thereby yielding a moisture content higher than would be determined using USBR 5300. While not eliminating this possibility, the incremental drying procedure described in this method will minimize the effect.

4.3 The behavior of a soil, when subjected to microwave energy, is dependent on its mineralogical composition, and as a result, no single procedure is applicable for all types of soil. Therefore, the method recommended in this designation is meant to serve as a guide when using the microwave oven.

5. Terminology

5.1 Definitions are in accordance with USBR 3900. A term of particular significance is:

5.1.1 *Moisture Content* (w, %).–The ratio expressed as a percentage of: (1) the mass of water in a given soil mass to, (2) the mass of soil particles (ASTM definition)

5.2 A term not included in USBR 3900 specific to this designation is:

5.2.1 *Microwave Heating*.–A process by which heat is induced within a material due to interaction between the molecules of the material and an alternating electric field generated by microwaves.

6. Apparatus

6.1 *Balance or Scale*.–A typical balance or scale used for this designation must be readable to 0.1 g and have a capacity of about 500 g.

6.2 *Drying Oven* (fig. 1).–A household-type microwave oven preferably with a vented chamber. The size and power of the oven required is dependent on its intended use. For routine laboratory applications, ovens with input power ratings between 1 and 2 kW have proven adequate.

6.3 *Dish, Evaporating* (fig. 1).–A nonmetallic dish resistant to thermal shock and change in shape and mass when subjected to repeated heating, cooling, or cleaning.

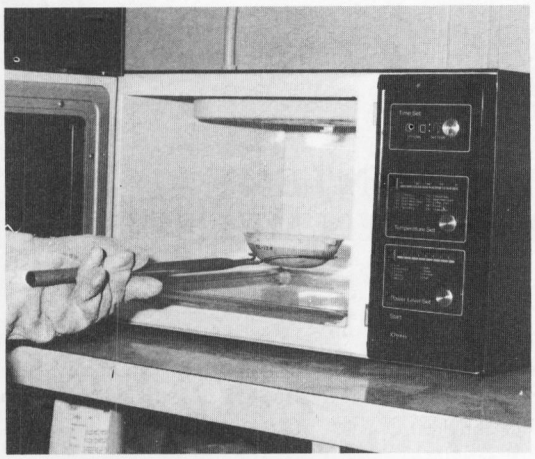

Figure 1. - Determining moisture content using microwave oven.

6.4 *Dish Holder* (fig. 1).–An asbestos glove or a device suitable for removing hot dishes from the oven.

7. Precautions

7.1 *Safety.*–This designation may involve hazardous materials, operations, and equipment.

7.1.1 Hot dishes should only be handled with a dish holder. Some soil types can generate considerable heat, and serious burns could result from improper handling.

7.1.2 Suitable eye protection is recommended due to the possibility of particle shattering.

7.1.3 Safety precautions supplied by the manufacturer of the microwave oven should be observed. Particular attention should be paid to keeping the door-sealing gasket clean and in good working condition.

NOTE 1.–When first introduced, microwave ovens were reported to affect heart pacemakers primarily because of the operating frequencies of the two devices. Since that time, pacemakers have been redesigned, and the microwave oven is not regarded as the health hazard it once was. However, it is advisable to post warnings that a microwave oven is in use.

8. Sampling, Test Specimens, and Test Units

8.1 The guidelines recommended in USBR 5300 should be followed when obtaining a sample for testing.

9. Calibration and Standardization

9.1 Verify that equipment is currently calibrated in accordance with the applicable calibration procedure. If the calibration is not current, perform the calibration before using the equipment for this procedure (USBR 1012).

9.2 In that the microwave oven is not designed to maintain a constant temperature within the chamber, the calibration procedures as outlined in USBR 1020 are not applicable. Manufacturer's recommendations regarding maintenance should be observed to ensure proper oven operation.

10. Conditioning

10.1 The test specimens should be prepared and processed as quickly as possible to minimize unrecorded moisture loss which would result in an erroneous moisture content determination. The specimen should be broken or cut into small size pieces to facilitate more uniform drying.

11. Procedure

11.1 All data are to be recorded on the "Moisture Determination Using Microwave Oven" form as shown on figure 2.

NOTE 2.–Moisture content determinations conducted in accordance with USBR 5300 may be recorded on the "Moisture Determination Using Microwave Oven" form (fig. 2). This is not a mandatory requirement, but has only been included as a convenience when the two methods are to be compared.

11.2 Determine the mass of the evaporating dish and record the value to the nearest 0.1 gram.

NOTE 3.–Mass determinations on figure 2 have been recorded to 0.01 gram to illustrate the relatively insignificant effect the removal of an additional small amount of water has on the calculated moisture content.

11.3 Place the test specimen in a clean, dry evaporating dish.

11.4 Determine the mass of the wet soil and evaporating dish and record the value to the nearest 0.1 gram.

11.5 Place the soil specimen and evaporating dish in a microwave oven.

11.6 Turn the oven on for 3 minutes (see notes 4 and 5).

11.7 After 3 minutes in the microwave oven, remove the dish and soil specimen, and determine and record the mass to the nearest 0.1 gram.

11.8 Carefully mix the soil with a small spatula or knife taking special precaution not to lose any soil.

11.9 Return soil and dish to the oven and turn the oven on for 1 minute.

11.10 Repeat steps in subparagraph 11.7 through 11.9 until the change between two consecutive determinations of mass is insignificant (0.1% or less of the initial wet weight of the soil). Use the final mass determination in calculating the moisture content.

11.11 Calculate and record the moisture content.

NOTE 4.–Most ovens have a variable power setting. The majority of soils tested have responded favorably to a setting of "high." However, for some soils such a setting may be too severe. The proper setting only can be determined through experience and use of a particular oven with various soil types.

NOTE 5.–It is believed that the incremental heating and drying procedure together with stirring will minimize overheating and result in a moisture content more consistent with results obtained in USBR 5300. The increments stated, while found suitable for most soil specimens with a mass of approximately 200 grams,

may not be applicable for all soils and ovens, and adjustment may be necessary.

12. Calculations

12.1 Determine the moisture content of the material using the following equations.

$$m_w = m_1 - m_2 \quad (1)$$

$$m_s = m_2 - m_c \quad (2)$$

$$w = 100 \left(\frac{m_w}{m_s}\right) \quad (3)$$

where:

m_w = mass of water, g
m_1 = mass of dish, + wet soil, g
m_2 = mass of dish, + dry soil, g
m_s = mass of dry soil, g
m_c = mass of dish, g
w = moisture content, %
100 = convert to percent

13. Report

13.1 The report is to consist of a completed and checked "Moisture Determination Using Microwave Oven"form (fig. 2).

13.2 All calculations are to show a checkmark.

7-2355 (12-86) Bureau of Reclamation	MOISTURE DETERMINATION USING MICROWAVE OVEN	Designation USBR 5315 89
SAMPLE NO. 1	PROJECT Example	FEATURE Example
TESTED BY DATE	COMPUTED BY DATE	CHECKED BY DATE

DISH NO.	MASS OF DISH (g)
36	146.30

TIME IN OVEN (min)	TOTAL TIME IN OVEN (min)	MASS OF DISH + SOIL (g)	MASS OF SOIL (g)	MASS OF WATER (g)	MOISTURE CONTENT (%)
0	0	231.62	—	—	—
3	3	217.75	71.45	13.87	19.4
1	4	216.22	69.92	15.40	22.0
1	5	215.72	69.42	15.90	22.9
1	6	215.48	69.18	16.14	23.3
1	7	215.32	69.02	16.30	23.6
1	8	215.22	68.92	16.40	23.8
1	9	215.19	68.89	16.43	23.8
1	10	215.19	68.89	16.43	23.8

MOISTURE DETERMINATION USING STANDARD OVEN	Designation USBR 5300-89
TESTED BY DATE	COMPUTED BY DATE / CHECKED BY DATE

DISH NUMBER	113
MASS OF DISH + WET SOIL	282.82
MASS OF DISH + DRY SOIL	260.40
MASS OF DISH	165.95
MASS OF WATER	22.42
MASS OF DRY SOIL	94.45
PERCENT MOISTURE	23.7

REMARKS: _____

GPO 853-020

Figure 2. - Moisture determination using microwave oven — example.

UNITED STATES DEPARTMENT OF THE INTERIOR
BUREAU OF RECLAMATION

USBR 5320-89

PROCEDURE FOR

DETERMINING SPECIFIC GRAVITY OF SOILS

INTRODUCTION

This procedure is under the jurisdiction of the Geotechnical Services Branch, code D-3760, Research and Laboratory Services Division, Denver Office, Denver, Colorado. The procedure is issued under the fixed designation USBR 5320. The number immediately following the designation indicates the year of acceptance or the year of last revision.

1. Scope

1.1 This designation outlines the procedure for determining specific gravity of soils. Also, the absorption of plus No. 4 particles can be obtained.

1.2 This procedure is used to determine the ratio of the mass in air of a given volume of material to the mass in air of an equal volume of distilled water at a stated temperature.

1.3 Three methods for determining specific gravity are outlined.

(1) Method A (pars. 6 to 15) describes the procedure for determining the apparent specific gravity of minus U.S.A. Standard series No. 4 (4.75-mm) sieve-size material by the volume method.

(2) Method B (pars. 16 to 25) describes the procedure for determining the specific gravity and absorption of gravel and cobbles by the displacement (siphon) method.

(3) Method C (pars. 26 to 35) describes the procedure for determining the specific gravity and absorption of gravel and cobbles by the mass in air and water method (suspension method).

2. Auxiliary Tests

2.1 A test sample must be obtained in accordance with USBR 5205 prior to performing this procedure.

3. Applicable Documents

3.1 *USBR Procedures*:
USBR 1012 Calibrating Balances or Scales
USBR 1020 Calibrating Ovens
USBR 1025 Checking Sieves
USBR 1030 Calibrating Specific Gravity Flasks
USBR 3900 Standard Definitions of Terms and Symbols Relating to Soil Mechanics
USBR 5205 Preparing Soil Samples by Splitting or Quartering
USBR 5300 Determining Moisture Content of Soil and Rock by the Oven Method

3.2 *ASTM Standards*:
C 127 Standard Test Method for Specific Gravity and Absorption of Coarse Aggregate
C 188 Standard Test Method for Density of Hydraulic Cement
E 1 ASTM Thermometers
E 11 Specifications for Wire-Cloth Sieves for Testing Purposes

4. Significance and Use

4.1 In soil investigations, the volume occupied by soil solids, the volume occupied by soil moisture, and the volume occupied by air in the soil mass are required values. These volumes are readily determined from the respective masses. To correlate mass and volume of material, specific gravity is required. There are several specific gravity determinations in common use. Those used by the Bureau of Reclamation are: specific gravity of solids, apparent specific gravity, and bulk specific gravity (specific mass gravity).

4.2 As an index test, specific gravity is somewhat indicative of the durability of a material. Materials with low specific gravity often break down and change properties with time, whereas materials with high specific gravity normally do not deteriorate rapidly. This observation is primarily applicable in evaluating coarse-grained materials and riprap or rockfill materials.

5. Terminology

5.1 Definitions are in accordance with USBR 3900. Terms of particular significance are:

5.1.1 *Apparent Specific Gravity* (G_a).–Ratio of: (1) the mass in air of a given volume of the impermeable portion of a permeable material (that is, the solid matter including its impermeable pores or voids) at a stated temperature, to (2) the mass in air of an equal volume of distilled water at a stated temperature (ASTM definition).

5.1.2 *Bulk Specific Gravity* (specific mass gravity) (G_m).–Ratio of: (1) the mass in air of a given volume of a permeable material (including both permeable and impermeable voids normal to the material) at a stated temperature, to (2) the mass in air of an equal volume of distilled water at a stated temperature (ASTM).

5.1.3 *Specific Gravity of Solids* (G_s):–Ratio of: (1) the mass in air of a given volume of solids at a stated temperature, to (2) the mass in air of an equal volume of distilled water at a stated temperature (ASTM).

5.1.4 *Void.*–Space in a soil or rock mass not occupied

by solid mineral matter. This space may be occupied by air, water, or other gaseous or liquid material (ASTM).

5.2 Terms not included in USBR 3900 specific to this designation are:

5.2.1 *Bulk Specific Gravity* (SSD).–The ratio of the mass in air of a unit volume of soils including the mass of water within the voids filled to the extent achieved by submerging in water for approximately 24 hours (but not including the voids between particles) at a stated temperature, compared to the mass in air of an equal volume of distilled water at a stated temperature.

5.2.2 *Bulk Specific Gravity* (ovendry).–The ratio of the mass in air of a unit volume of ovendried soil at a stated temperature, to the mass in air of an equal volume of distilled water at a stated temperature.

METHOD A
Apparent Specific Gravity of Minus No. 4 (4.75 mm) Sieve Size Material by the Volume Method

6. Summary of Method A

6.1 A soil sample is prepared. A specimen is placed in a specific gravity flask and distilled water—sufficient to cover the specimen—is added to the flask. A vacuum is applied carefully to the flask so soil is not pulled from the flask by violent boiling. The flask is rolled and shaken occasionally to assist in removal of air from the soil-water mixture. When air evacuation is complete, the flask is filled with distilled water to the calibration line on the neck. The total mass of the flask, specimen, and water is determined. The temperature of the soil-water mixture in the flask is determined and the specific gravity of the soil specimen is calculated.

7. Apparatus — Method A

7.1 *Balance or Scale.*–A typical balance or scale used for this designation must be readable to 0.01 g and have a capacity of about 500 g.

7.2 *Desiccator.*–An enclosed container, containing a moisture absorbing chemical compound, used for cooling a heated soil sample while maintaining a zero moisture content atmosphere.

7.3 *Drying Oven.*–An oven, thermostatically controlled, preferably of the forced-draft type, and capable of maintaining a uniform temperature of 230±9 °F (110±5 °C) throughout the drying chamber.

7.4 *Thermometer.*–0 to 50 °C range, 0.5° divisions, conforming to the requirements of ASTM E 1.

7.5 *Water Bath.*–A water bath for maintaining the specific gravity flask and contents at a constant temperature during the procedure. The water bath is not mandatory but is recommended to minimize effects of density variations of the water from room temperature fluctuations.

7.6 *Specific Gravity Flask* (fig. 1).–A flask having a capacity of 250 mL or larger.

7.7 *Vacuum Pump* (fig. 2).–A vacuum pump capable of applying a vacuum of at least 10 inches (250 mm) of mercury to the specific gravity flask.

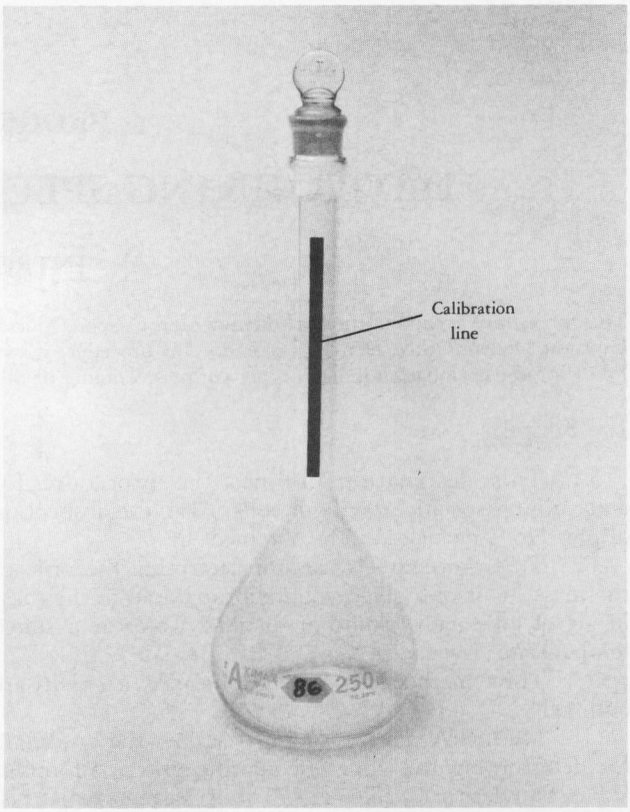

Figure 1. – Specific gravity flask.

7.8 *Flexible Tubing* (fig. 2).–Noncollapsible flexible tubing for applying vacuum to the specific gravity flasks.

7.9 *Hand-Held Vacuum* (fig. 3).–A hand-held vacuum pump capable of applying a vacuum of at least 10 inches (250 mm) of mercury may be used in place of the vacuum system as shown on figure 2.

8. Reagents and Materials — Method A

8.1 Distilled water is to be used any time water is called for in this test method.

8.2 For materials such as coal, fly ash, and soluble salts, kerosene may be a better wetting agent for performing the specific gravity test. Refer to ASTM C 188.

9. Precautions — Method A

9.1 *Safety Precautions.*–This designation may involve hazardous materials, operations, and equipment.

9.2 *Technical Precautions.*–When applying vacuum to the test specimen, care should be exercised not to allow soil to be drawn into the vacuum line due to violent boiling.

10. Sampling, Test Specimen, and Test Units — Method A

10.1 *Sample Preparation*:

10.1.1 Prepare a test sample in accordance with USBR 5205.

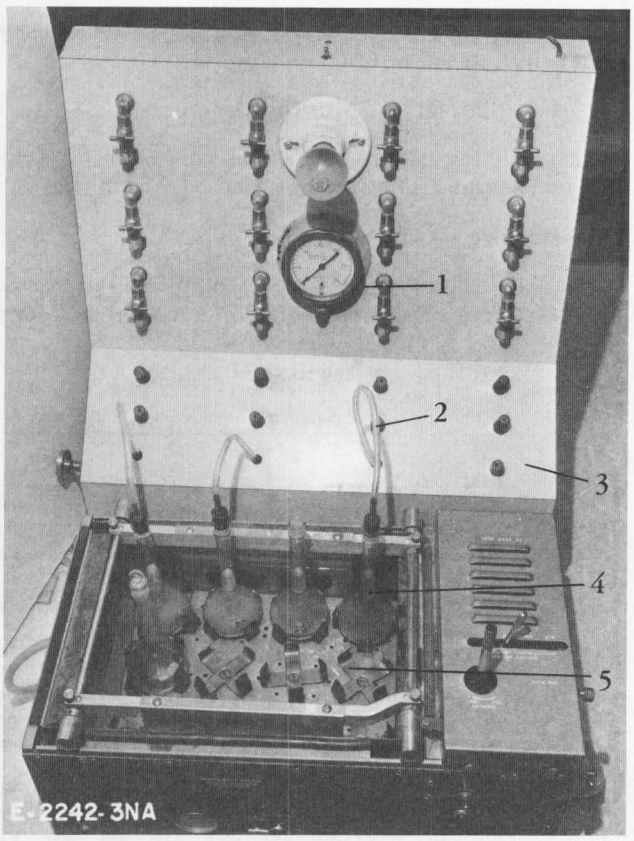

Figure 2. – Apparatus for determining apparent specific gravity. (1) vacuum gauge, (2) rubber tubing, (3) vacuum source, (4) specific gravity flask, and (5) constant temperature bath.

10.1.2 *Oven Dry Soils*:

10.1.2.1 Place the sample of minus No. 4 (4.75-mm) material into a drying oven.

10.1.2.2 Dry the sample to a constant mass.

10.1.2.3 Cool the sample to room temperature in a desiccator.

10.2 *Specimen Preparation*:

10.2.1 Obtain a specimen of approximately 100 g from the soil sample prepared in subparagraphs 10.1.2.1 through 10.1.2.3.

10.2.2 Record the mass of the specimen as shown on figure 4.

10.2.3 *Soils at Natural Moisture Content*:

10.2.3.1 When required, soil may be tested at natural moisture content. When testing soil at natural moisture content, determination of the dry mass of the specimen is made based on a companion specimen of ovendried material.

10.2.4 When testing fine-grained soil of medium to high plasticity, or soil at natural moisture content, the soil specimen should be mixed into a slurry with distilled water and carefully poured into the specific gravity flask for testing.

11. Calibration and Standardization — Method A

11.1 Verify that equipment is currently calibrated in accordance with the applicable calibration procedure. If the calibration is not current, perform the calibration before using the equipment for this procedure.

USBR 1012 Calibrating Balances or Scales
USBR 1020 Calibrating Ovens
USBR 1025 Checking Sieves
USBR 1030 Calibrating Specific Gravity Flasks

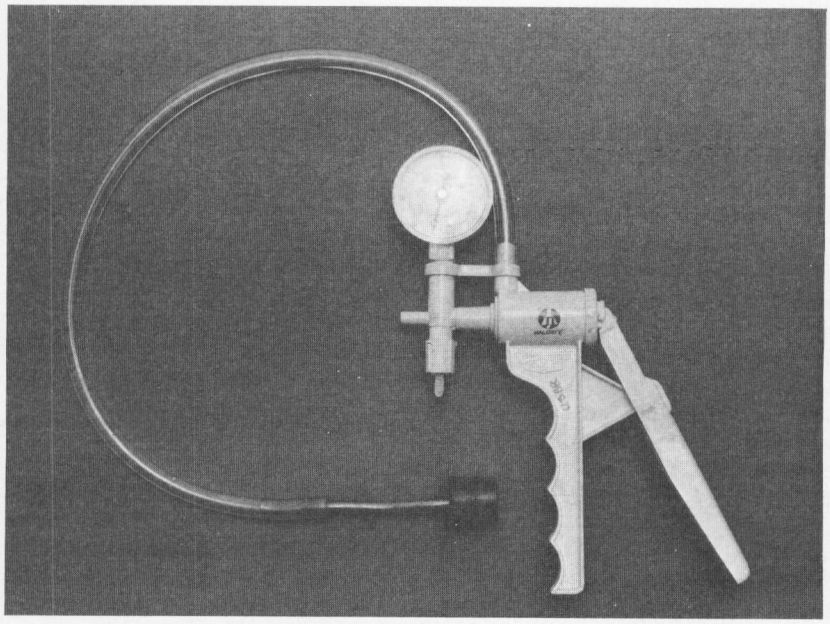

Figure 3. – Hand-held vacuum pump.

12. Conditioning — Method A

12.1 Fine-grained specimens of medium to high plasticity should be placed in distilled water for a minimum of 16 hours prior to testing to enhance saturation.

12.2 Perform this procedure in an area isolated from excessive heat sources or air currents and maintained at or near room temperature, 68 °F (20 °C).

13. Procedure — Method A

13.1 All data are to be recorded on the "Specific Gravity Determination (Volume Method)" form as shown on figure 4.

13.2 Record the specific gravity flask number.

13.3 Locate and record the appropriate flask calibration data (USBR 1030).

13.4 Fill the specific gravity flask with about 1/2 inch (13 mm) of distilled water.

13.5 Carefully pour the specimen (as prepared in subpar. 10.2) into the specific gravity flask so soil is not lost.

13.6 Fill the flask with sufficient distilled water to completely cover the test specimen.

13.7 Care should be taken so all of the test specimen is washed from inside the neck of the flask into the body of the flask.

13.8 Apply a vacuum to the specific gravity flask taking care to prevent soil from being pulled out of the flask by violent boiling. Violent boiling may be decreased by reducing the vacuum or by placing the flask in a water bath, if available.

13.9 Occasionally, roll or shake the flask to assist in removing entrapped air.

13.10 When most of the air appears to have been removed from the soil specimen, fill the flask with distilled water until the water level is in the lower part of the flask neck some distance below the calibration line.

13.11 Check for complete air evacuation by alternately applying and releasing vacuum to the test specimen. When no change in water level is observed, air evacuation is complete.

13.12 Fill the specific gravity flask with distilled water until the bottom of the meniscus is even with the calibration line on the neck (see fig. 1).

13.13 Determine and record the mass of soil, water, and flask to the nearest 0.01 g.

13.14 Stir or agitate the test specimen and insert a thermometer to middepth in the flask. Read and record the temperature to the nearest 0.5 °C.

13.15 Repeat subparagraphs 13.2 through 13.14 to obtain a second trial.

13.16 Calculate and record to the nearest 0.01 the specific gravity obtained for each of the two trials.

13.17 The two calculated specific gravities should be within ±0.02 of each other. If this is not the case, the procedure is to be repeated until two consecutive specific gravity values are within ±0.02 of each other.

13.18 Calculate an average specific gravity for each soil specimen from the two values determined.

14. Calculations — Method A

14.1 All calculations are as shown on the "Specific Gravity Determination (Volume Method)" form (fig. 4).

15. Report — Method A

15.1 The report is to consist of a completed and checked "Specific Gravity Determination (Volume Method)" form (fig. 4).

15.2 All calculations are to show a checkmark.

Table 1. – Absolute density of water in grams per cubic centimeter.†

Degrees C	0	1	2	3	4	5	6	7	8	9
0	0.999841	847	854	860	866	872	878	884	889	895
1	900	905	909	914	918	923	927	930	934	938
2	941	944	947	950	953	955	958	960	962	964
3	965	967	968	969	970	971	972	972	973	973
4	973	973	973	972	972	972	970	969	968	966
5	965	963	961	959	957	955	952	950	947	944
6	941	938	935	931	927	924	920	916	911	907
7	902	898	893	888	883	877	872	866	861	855
8	849	843	837	830	824	817	810	803	796	789
9	781	774	766	758	751	742	734	726	717	709
10	700	691	682	673	664	654	645	635	625	615
11	605	595	585	574	564	553	542	531	520	509
12	498	486	475	463	451	439	427	415	402	390
13	377	364	352	339	326	312	299	285	272	258
14	244	230	216	202	188	173	159	144	129	114
15	099	084	069	054	038	023	007	*991	*975	*959
16	0.998943	926	910	893	877	860	843	826	809	792
17	774	757	739	722	704	686	668	650	632	613
18	595	576	558	539	520	501	482	463	444	424
19	405	385	365	345	325	305	285	265	244	224
20	203	183	162	141	120	099	078	056	035	013
21	0.997992	970	948	926	904	882	860	837	815	792
22	770	747	724	701	678	655	632	608	585	561
23	538	514	490	466	442	418	394	369	345	320
24	296	271	246	221	196	171	146	120	095	069
25	044	018	*992	*967	*941	*914	*888	*862	*836	*809
26	0.996783	756	729	703	676	649	621	594	567	540
27	512	485	457	429	401	373	345	317	289	261
28	232	204	175	147	118	089	060	031	002	*973
29	0.995944	914	885	855	826	796	766	736	706	676
30	646	616	586	555	525	494	464	433	402	371

† For inch-pound applications, multiply the values in this table by 62.4280 to convert to lbm/ft³.

* First three significant figures shown in line below.

METHOD B
Specific Gravity of Gravel and Cobbles by the Displacement (Siphon) Method

16. Summary of Method B

16.1 A sample of plus No. 4 (4.75 mm) sieve-size material is prepared and immersed in water for a minimum of 24 hours. The specimen is removed from the water

7-1589 (10-86) Bureau of Reclamation	SPECIFIC GRAVITY DETERMINATION (VOLUME METHOD)	Designation USBR 5320-89
SAMPLE NO. 1	PROJECT Example	FEATURE Example
SPECIMEN NO. 2	HOLE NO. 17	DEPTH 0-5 ft [X] m [ ]
TESTED BY DATE	COMPUTED BY DATE	CHECKED BY DATE

	TRIAL NO. 1	TRIAL NO. 2
1. FLASK NO.	58	57
2. MASS OF FLASK * (g)	79.88	79.89
3. VOLUME OF FLASK * (cm^3)	246.57	246.52
4. MASS OF SPECIMEN (g)	105.20	104.80
5. MASS OF FLASK + SPECIMEN + WATER (g)	391.29	390.90
6. TEMPERATURE OF WATER (°C)	23.5	23.0
7. MASS OF FLASK + WATER = (5) - (4) (g)	286.09	286.10
8. MASS OF WATER IN FLASK = (7) - (2) (g)	206.21	206.21
9. ABSOLUTE DENSITY OF WATER AT TEMP (6) (g/cm^3)	0.997418	0.997538
10. VOLUME OF WATER IN FLASK = (8) / (9) (cm^3)	206.74	206.72
11. VOLUME OF SOIL = (3) - (10) (cm^3)	39.83	39.80
12. SPECIFIC GRAVITY = (4) / (11) **	2.64	2.63
13. AVERAGE	2.64	

*Calibration data from USBR 1030

**Implies that for water 1 g = 1 mL = 1 cm^3

Figure 4. - Specific gravity determination (volume method) — example.

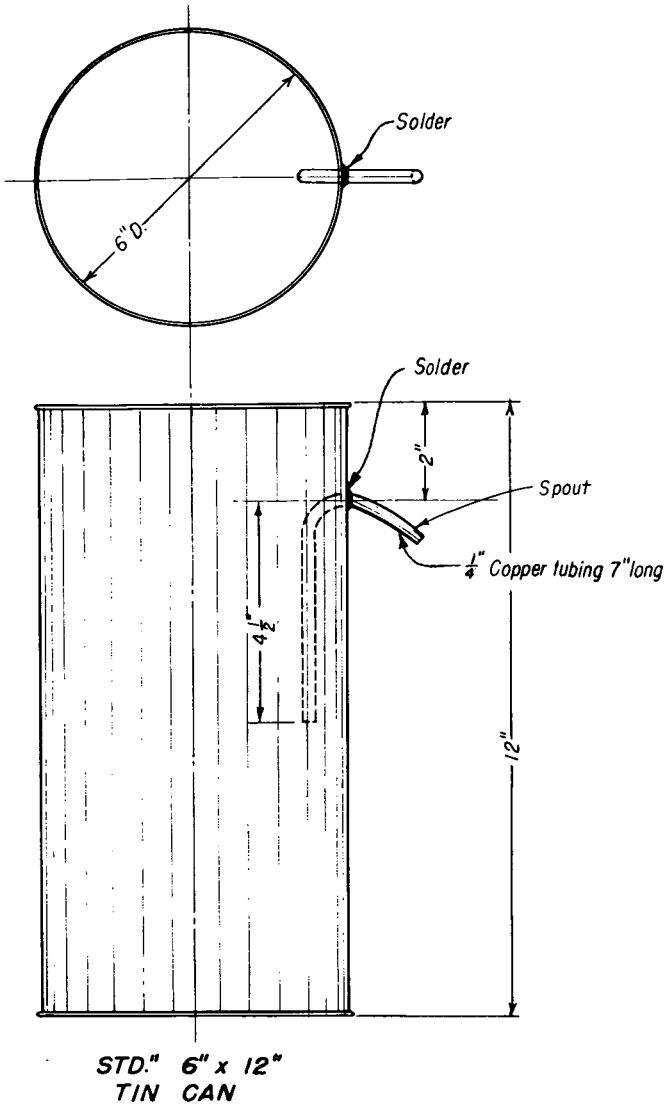

Figure 5. – Specific gravity siphon can.

and surface dried. The mass of the SSD (saturated surface-dry) specimen is determined. The specimen is placed carefully in a siphon can filled with water. The displaced water from the can is collected and the volume of the water displaced is determined. The specimen is removed, placed in a drying oven, and the ovendry mass is determined. Bulk specific gravities—both saturated surface-dry and ovendry—and absorption are calculated.

17. Apparatus — Method B

17.1 *Balance or Scale.*–The balance or scale used depends on the test sample mass (see subpar. 20.1). Typical balances and scales used for this method are:

Approximate capacity	*Readable to*
4000 g	1 g
20 kg	1 g
80 kg	0.01 kg or 10 g

If a balance or scale with a greater capacity is used, the accuracy must be sufficient to determine the mass to 0.1 percent at any point within the range of use.

17.2 *Drying Oven.*–An oven, thermostatically controlled, preferably of the forced-draft type, and capable of maintaining a uniform temperature of 230±9 °F (110±5 °C) throughout the drying chamber.

17.3 *Container.*–A container of suitable size to catch the flow of water from the siphon can spout; 1000-mL capacity graduated cylinder, graduated to 10 mL, may be used for soil with a maximum particle size of 3/8-inch.

17.4 *Towel.*–A towel of sufficient size to surface-dry the sample.

17.5 *Pan.*–A large pan, preferably galvanized steel, about 3 by 2 feet by 4 inches deep (90 by 60 by 10 cm deep), used for holding the specimen for soaking prior to testing. For maximum particle size of 5 inches and larger, pans or containers of appropriate size are required.

17.6 *Equipment Unique to This Procedure*:

17.6.1 *Siphon Can.*–A can or other container of appropriate size with a spout having an inside extension protruding down the side of the can. A typical siphon can that can be used for soils with a maximum particle size of 3/8-inch is shown on fig. 5.

17.6.2 *Stopper.*–Any suitable device for stopping the flow from spout.

18. Reagents and Materials — Method B

18.1 Tapwater free of acids, alkalies, or oils and is suitable for drinking should be used for performing the test method.

19. Precautions — Method B

19.1 *Safety Precautions.*–This designation may involve hazardous materials, operations, and equipment.

19.2 *Technical Precautions.*–Care should be taken to avoid evaporation from the saturated surface-dry particles.

20. Sampling, Test Specimen, and Test Units — Method B

20.1 *Sample Preparation.*–Prepare a test sample of plus No. 4 sieve-size particles in accordance with USBR 5205. The mass of the test sample depends on the maximum particle size present in the soil as follows:

Maximum particle size		*Minimum test sample mass*	
in	mm	lbm	kg
⅜	9.5	4	2
¾	19.0	7	3
1-½	37.5	11	5
3	75	40	18
5	125	165	75
8	200	716	325
12	300	2425	1100

For some test procedures, all the available soil is tested; and although the specimen mass may not meet the

minimum requirements, the value obtained is used as the specific gravity of that soil for the purposes of that procedure.

20.2 *Testing by Fractions.*-In some instances, particularly with plus 3-inch particles, it may be desirable to test the soil in two or more separate size fractions. When tested in separate size fractions, the minimum required mass of each fraction becomes the difference between the masses indicated in subparagraph 20.1 for the maximum and minimum particle size of the fraction. If the sample is tested in fractions, the gradation of the sample must be determined.

20.3 *Specimen Preparation.*-To prepare the test specimen, wash the individual particles of the test sample. Submerge the particles in a container of water for a minimum of 24 hours.

21. Calibration and Standardization — Method B

21.1 Verify that equipment is currently calibrated in accordance with the applicable calibration procedure. If the calibration is not current, perform the calibration before using the equipment for this procedure.
USBR 1012 Calibrating Balances or Scales
USBR 1020 Calibrating Ovens

22. Conditioning — Method B

22.1 Conditioning is described in paragraph 20 as part of specimen preparation.

23. Procedure — Method B

23.1 All data are to be recorded on the "Bulk Specific Gravity and Percent Absorption of the Plus No. 4 Fraction" form (Siphon Method) as shown on figure 6.

23.2 Based on the total mass of the specimen, or the mass of the fraction being tested, determine and record all measurements of mass to the minimum increment of mass as follows:

Specimen mass, kg	*Minimum increment of mass*
1 to 10	1 g
10 to 100	0.01 kg or 10 g
100 to 1000	0.1 kg

23.3 Fill the siphon can with water to a level higher than the spout opening. Allow water to drain through the siphon spout until an equilibrium level is reached.

23.4 Place a stopper in the siphon can spout opening.

23.5 Carefully remove the specimen from the pan containing water (subpar. 20.3) and roll it in a large towel or cloth until all visible surface water is removed. Wipe the larger particles individually. The surfaces should still appear glossy or damp. In this condition, the specimen is referred to as SSD (saturated surface-dry).

23.6 Protect the surface-dry particles from excess evaporation.

23.7 Determine and record the mass of the SSD specimen.

23.8 Carefully place the specimen into the siphon can and stir the test specimen with a rod to remove all entrapped air.

23.9 When the water surface calms, remove the stopper from the siphon spout and allow the water to flow into a container.

23.10 Measure and record the mass of water displaced from the siphon can and record as the "volume of water displaced," assuming that 1 g of water equals 1 mL.

23.10.1 For soil having a maximum particle size of 3/8-inch, the volume may be measured directly by draining the waterflow from the spout into a graduated cylinder. Determine and record the volume of water to the nearest 5 mL.

23.11 Remove the specimen from the siphon can and ovendry to a constant mass.

23.12 Determine and record the ovendry mass of the specimen.

23.13 Calculate and record to the nearest 0.01 both SSD and ovendry bulk specific gravities of the specimen as shown on figure 6.

23.14 Calculate and record to the nearest 0.1 percent the absorption.

23.15 If the specific gravity and absorption were determined for separate size fractions, calculate and record to the nearest 0.01 the average specific gravity and calculate and record to the nearest 0.1 percent the average absorption for the original specimen.

23.16 If desired, specified, or if test results are questionable, repeat subparagraphs 23.3 through 23.15.

23.16.1 Each bulk specific gravity obtained from each trial is to be within ±0.02 of each other. If this is not the case, this procedure is to be repeated until two consecutive trials meet these criteria.

23.16.2 Calculate and record the average bulk specific gravity and the absorption for the specimen.

24. Calculations — Method B

24.1 All calculations are as shown on the "Bulk Specific Gravity and Percent Absorption of the Plus No. 4 Fraction" form (fig. 6).

24.2 *Average Specific Gravity.*-When the sample is tested in separate size fractions, the average value for bulk specific gravity, bulk specific gravity (SSD), or apparent specific gravity can be computed as the weighted average of the values using the following equation (see note 1):

$$G = \frac{1}{\frac{P_1}{100\,G_1} + \frac{P_2}{100\,G_2} + \cdots \frac{P_n}{100\,G_n}}$$

where:

G = average specific gravity. All forms of expression of specific gravity can be averaged in this manner.

$G_1, G_2, \ldots G_n$ = appropriate specific gravities for each size fraction depending on the type of specific gravity being averaged.

7-2336 (1-86) Bureau of Reclamation	BULK SPECIFIC GRAVITY AND PERCENT ABSORPTION OF THE PLUS NO. 4 FRACTION	Designation USBR 5320- 89
SAMPLE NO. 1	PROJECT Example	FEATURE Example
HOLE NO. 5	DEPTH 0 — 10 ft [X] m [ ]	
TESTED BY DATE	COMPUTED BY DATE	CHECKED DATE

SUSPENSION METHOD

		TRIAL NO. 1	TRIAL NO. 2
1. Mass of basket in water	(g)		
2. Mass of basket in air	(g)		
3. Mass of SSD* specimen + basket in air	(g)		
4. Mass of SSD specimen + basket in water	(g)		
5. Mass of ovendry specimen	(g)		
6. Mass of SSD specimen in air (3) - (2)	(g)		
7. Mass of SSD specimen in water (4) - (1)	(g)		
8. Apparent specific gravity (5)/[(5) - (7)]			
9. Average apparent specific gravity			
10. Bulk specific gravity (SSD) (6)/[(6) - (7)]			
11. Average bulk specific gravity (SSD)			
12. Bulk specific gravity (ovendry) (5)/[(6) - (7)]			
13. Average bulk specific gravity (ovendry)			
14. Absorption [[(6) - (5)]/(5)] x 100	(%)		
15. Average absorption	(%)		

SIPHON METHOD

1. Mass of specimen (SSD)	(g)	2020	2050
2. Volume of water displaced	(mL)	760	765
3. Mass of ovendry specimen	(g)	1999	2025
4. Mass of water (1) - (3)	(g)	21	25
5. Bulk specific gravity (SSD) (1)/(2)		2.66	2.68
6. Average bulk specific gravity (SSD)		2.67	
7. Bulk specific gravity (ovendry) (3)/(2)		2.63	2.65
8. Average bulk specific gravity (ovendry)		2.64	
9. Absorption [(4)/(3)] x 100	(%)	1.1	1.2
10. Average absorption	(%)	1.2	

*SSD (Saturated surface-dry)

Figure 6. – Bulk specific gravity and percent absorption of the plus No. 4 fraction (siphon method) — example.

$P_1, P_2, \ldots P_n$ = percentages, by dry mass, of each size fraction present in the original sample, %.
100 = convert from percent to decimal.

24.3 *Average Absorption.*–When the sample is tested in separate size fractions, the average absorption is the average of the values weighted in proportion to the percentages of the size fractions in the original sample as follows:

$$A = (P_1A_1/100) + (P_2A_2/100) + \ldots (P_nA_n/100)$$

where:

A = average absorption, %
$A_1, A_2, \ldots A_n$ = absorption percentages for each size fraction, %
$P_1, P_2, \ldots P_n$ = percentages, by dry mass, of each size fraction present in the original sample, %
100 = convert from percent to decimal

Note 1.–Derivation of these equations can be found in ASTM C 127 appendix X1.

25. Report — Method B

25.1 The report is to consist of a completed and checked "Bulk Specific Gravity and Percent Absorption of the Plus No. 4 Fraction" (Siphon Method) form (fig. 6).

25.2 All calculations are to show a checkmark.

METHOD C
Specific Gravity of Gravel and Cobbles by the Mass in Air and Water (Suspension Method)

26. Summary of Method C

26.1 A sample of plus No. 4 (4.75 mm) sieve-size material is prepared and immersed in water for a minimum of 24 hours. The specimen is removed from the water and surface-dried. The mass of the SSD (saturated surface-dry) specimen is determined. The specimen is placed in a wire basket of known mass, suspended in water, and the specimen mass in water is determined. The specimen is removed, ovendried, and its mass in air is determined. Bulk specific gravities—both saturated surface-dry and ovendry—and absorption are calculated.

27. Apparatus — Method C

27.1 *Balance or Scale.*–The balance or scale used depends on the test sample mass (see subpar. 30.1). The balance or scale must be equipped with suitable apparatus for suspending the wire basket in water from the center of the platform or pan of the balance or scale. Although it may be used for other purposes, a balance or scale is usually set up specifically for this method (see fig. 7).

Typical balances and scales used are:

Approximate capacity	*Readable to*
4000 g	1 g
20 kg	1 g

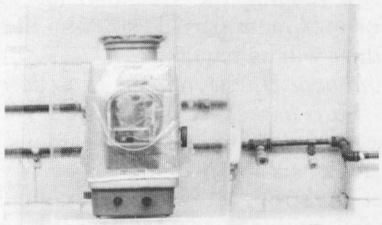

Scale

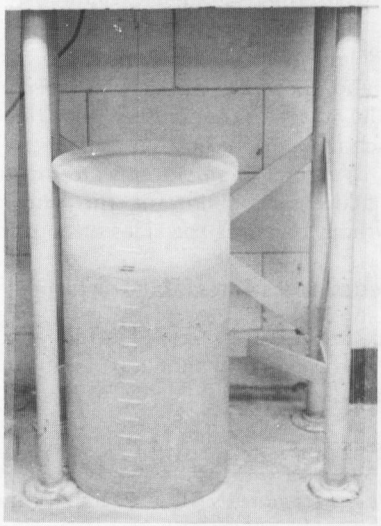

Water container

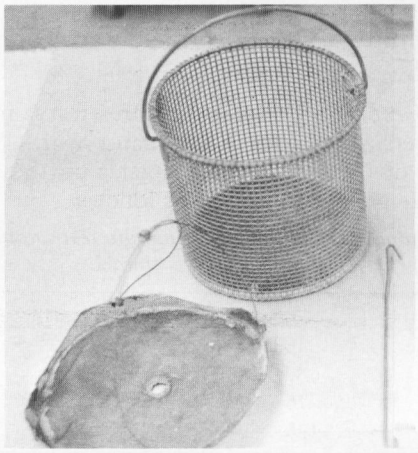

Wire baskets

Figure 7. – Bulk specific gravity (suspension method) equipment.

27.2 *Drying Oven.*–An oven, thermostatically controlled, preferably of the forced-draft type, and capable of maintaining a uniform temperature of 230±9 °F (110±5 °C) throughout the drying chamber.

27.3 *Pan.*–A large pan, preferably galvanized steel, about 3 by 2 feet by 4 inches deep (90 by 60 by 10 cm deep), used for holding the specimen for soaking prior to testing. For maximum particle size of 5 inches, a larger pan or container will be required.

27.4 *Equipment Unique to This Procedure* (fig. 7):

27.4.1 *Wire Basket.*–A brass wire (No. 6 or finer) container large enough to hold 5000 grams of material for testing soils with a maximum particle size up to 1-1/2 inches. A stronger and larger container will be required for soils with a maximum particle size of 3 inches or larger. The container must be constructed so as to prevent trapping air when the container is submerged.

27.4.2 *Suspension Wire.*–A wire of sufficient strength and length to suspend the wire basket (during calibration) and the wire basket plus specimen (during testing) in the water container such that the wire basket does not touch the sides or bottom of the water container.

27.4.3 *Water Container.*–A water container large enough to allow submersion of the wire basket and specimen without touching the sides or bottom.

28. Reagents and Materials — Method C

28.1 Tapwater that is free of acids, alkalies, or oils and is suitable for drinking should be used for performing this test method.

29. Precautions — Method C

29.1 *Safety Precautions.*–This designation may involve hazardous materials, operations, and equipment.

29.2 *Technical Precautions.*–Care should be taken to avoid evaporation from the saturated surface-dry particles.

30. Sampling, Test Specimen, and Test Units — Method C

30.1 *Sample Preparation.*–Prepare a test sample of plus No. 4 sieve-size particles in accordance with USBR 5205. The mass of the test sample depends on the maximum particle size present in the soil as follows:

Maximum particle size		*Minimum test sample mass*	
in	mm	lbm	kg
⅜	9.5	4	2
¾	19.0	7	3
1-½	37.5	11	5
3	75	40	18
5	125	165	75

For some test procedures all the available soil is tested, and although the sample mass may not meet the minimum requirements, the value obtained is used as the specific gravity of that soil for the purposes of that procedure.

30.2 *Testing by Fractions.*–In some instances, particularly with plus 3-inch particles, it may be desirable to test the soil in two or more separate size fractions. When tested in separate size fractions, the minimum required mass of each fraction becomes the difference between the masses indicated in subparagraph 30.1 for the maximum and minimum particle size of the fraction. If the sample is tested in fractions, the gradation of the sample must be determined.

30.3 *Specimen Preparation.*–To prepare the test specimen, wash the individual particles of the test sample. Submerge the particles in a container of water for a minimum of 24 hours.

31. Calibration and Standardization — Method C

31.1 Verify that equipment is currently calibrated in accordance with the applicable calibration procedure. If the calibration is not current, perform the calibration before using the equipment for this procedure.

USBR 1012 Calibrating Balances or Scales

USBR 1020 Calibrating Ovens

31.2 *Wire Basket Calibration*:

31.2.1 Submerge the wire basket in the water container using the suspension wire (see subpar. 27.4.2) to connect the basket to the underside of the balance or scale.

31.2.2 Determine the mass of the empty wire basket completely immersed but suspended by the suspension wire in the water.

31.2.3 Record the value to the nearest 1 g as *Mass of basket in water* on the "Bulk Specific Gravity and Percent Absorption of the Plus No. 4 Fraction" form (Suspension Method) as shown on figure 8.

32. Conditioning — Method C

32.1 Conditioning is described in paragraph 30 as part of the specimen preparation.

33. Procedure — Method C

33.1 All data are to be recorded on the "Bulk Specific Gravity and Percent Absorption of the Plus No. 4 Fraction" form (Suspension Method) as shown on figure 8.

33.2 Remove the specimen from the pan containing water (see subpar. 30.3) and roll it in a large cloth or towel until all visible surface water is removed. Wipe the larger particles individually. The surfaces should still appear glossy or damp. The specimen in this condition is referred to as SSD (saturated surface-dry).

33.3 Protect the surface-dry particles from excess evaporation.

33.4 Determine and record the mass of wire basket and suspension wire in air to the nearest 1 gram.

33.5 Carefully place the SSD specimen into the wire basket.

33.6 Determine and record the mass of the SSD specimen, basket, and suspension wire in air to the nearest 1 gram.

33.7 Immerse the SSD specimen and wire basket into the water with the same suspension wire and to the same depth in water used in calibrating the wire basket.

33.8 Remove entrapped air from around and under the basket and specimen.

33.9 Determine and record the mass of the specimen, basket, and suspension wire in water to the nearest 1 gram.

33.10 Remove wire basket and specimen from the water.

33.11 Place specimen into a suitable pan for drying.

33.12 Place the specimen and pan into a drying oven for a minimum of 18 hours.

33.13 Determine and record the mass of the ovendry specimen to the nearest 1 gram.

33.14 Calculate and record to the nearest 0.01 the bulk (SSD and ovendry) and apparent specific gravities. Calculate and record to the nearest 0.1 percent the absorption.

33.15 If the specific gravity and absorption were determined for separate size fractions, calculate and record to the nearest 0.01 the average specific gravity and calculate and record to the nearest 0.1 percent the average absorption for the original specimen.

33.16 If desired, specified, or if test results are questionable, repeat subparagraphs 33.2 through 33.15.

33.16.1 Each bulk specific gravity and apparent specific gravity obtained from each trial is to be within ±0.02 of each other. If this is not the case, this procedure is to be repeated until two consecutive trials meet these criteria.

33.16.2 Calculate and record the average bulk specific gravity and the absorption for the specimen.

34. Calculations — Method C

34.1 All calculations are as shown on the "Bulk Specific Gravity and Percent Absorption of the Plus No. 4 Fraction" (Suspension Method) form (fig. 8).

34.2 *Average Specific Gravity.*–When the sample is tested in separate size fractions, the average value for bulk specific gravity, bulk specific gravity (SSD), or apparent specific gravity can be computed as the weighted average of the values using the following equation (see note 1):

$$G = \frac{1}{\frac{P_1}{100\ G_1} + \frac{P_2}{100\ G_2} + \ldots \frac{P_n}{100\ G_n}}$$

where:

G = average specific gravity. All forms of expression of specific gravity can be averaged in this manner.

$G_1, G_2, \ldots G_n$ = appropriate specific gravities for each size fraction depending on the type of specific gravity being averaged.

$P_1, P_2, \ldots P_n$ = percentages, by dry mass, of each size fraction present in the original sample, %.

100 = convert from percent to decimal.

34.3 *Average Absorption.*–When the sample is tested in separate size fractions, the average absorption is the average of the values weighted in proportion to the percentages of the size fractions in the original sample as follows:

$$A = (P_1A_1/100) + (P_2A_2/100) + \ldots (P_nA_n/100)$$

where:

A = average absorption, %

$A_1, A_2, \ldots A_n$ = absorption percentages for each size fraction, %

$P_1, P_2, \ldots P_n$ = percentages, by dry mass, of each size fraction present in the original sample, %

100 = convert from percent to decimal

35. Report — Method C

35.1 The report is to consist of a completed and checked "BulkSpecific Gravity and Percent Absorption of the Plus No. 4 Fraction" (Suspension Method) form (fig. 8).

35.2 All calculations are to show a checkmark.

7-2336 (1-86) Bureau of Reclamation	BULK SPECIFIC GRAVITY AND PERCENT ABSORPTION OF THE PLUS NO. 4 FRACTION	Designation USBR 5320- 89
SAMPLE NO. 1	PROJECT Example	FEATURE Example
HOLE NO. 3	DEPTH 0-15	ft [X] m [ ]
TESTED BY DATE	COMPUTED BY DATE	CHECKED DATE

SUSPENSION METHOD

		TRIAL NO. 1	TRIAL NO. 2
1. Mass of basket in water	(g)	485	485
2. Mass of basket in air	(g)	540	540
3. Mass of SSD* specimen + basket in air	(g)	3277	3352
4. Mass of SSD specimen + basket in water	(g)	2132	2181
5. Mass of ovendry specimen	(g)	2645	2720
6. Mass of SSD specimen in air (3) - (2)	(g)	2737	2812
7. Mass of SSD specimen in water (4) - (1)	(g)	1647	1696
8. Apparent specific gravity (5)/[(5) - (7)]		2.65	2.66
9. Average apparent specific gravity		2.66	
10. Bulk specific gravity (SSD) (6)/[(6) - (7)]		2.51	2.52
11. Average bulk specific gravity (SSD)		2.52	
12. Bulk specific gravity (ovendry) (5)/[(6) - (7)]		2.43	2.44
13. Average bulk specific gravity (ovendry)		2.44	
14. Absorption [[(6) - (5)]/(5)] x 100	(%)	3.5	3.4
15. Average absorption	(%)	3.5	

SIPHON METHOD

1. Mass of specimen (SSD)	(g)		
2. Volume of water displaced	(mL)		
3. Mass of ovendry specimen	(g)		
4. Mass of water (1) - (3)	(g)		
5. Bulk specific gravity (SSD) (1)/(2)			
6. Average bulk specific gravity (SSD)			
7. Bulk specific gravity (ovendry) (3)/(2)			
8. Average bulk specific gravity (ovendry)			
9. Absorption [(4)/(3)] x 100	(%)		
10. Average absorption	(%)		

*SSD (Saturated surface-dry)

Figure 8. – Bulk specific gravity and percent absorption of the plus No. 4 fraction (suspension method) — example.

UNITED STATES DEPARTMENT OF THE INTERIOR
BUREAU OF RECLAMATION

USBR 5325-89

PROCEDURE FOR

PERFORMING GRADATION ANALYSIS OF GRAVEL SIZE FRACTION OF SOILS

INTRODUCTION

This procedure is under the jurisdiction of the Geotechnical Services Branch, code D-3760, Research and Laboratory Services Division, Denver Office, Denver, Colorado. The procedure is issued under the fixed designation USBR 5325. The number immediately following the designation indicates the year of acceptance or the year of last revision.

1. Scope

1.1 This designation outlines the procedure for performing gradation analysis of the gravel size fraction of soils. The term "gravel" refers to particles of rock that will pass a 3-inch (75-mm) sieve and be retained on a No. 4 (4.75-mm) sieve. The sieve sizes included in this designation are noted.

U.S.A. Standard series sieve	
mm	in
75	3
37.5	1-1/2
19.0	3/4
9.5	3/8
4.75	(No. 4)

2. Auxiliary Tests

2.1 A sample must be obtained in accordance with USBR 5205 prior to performing this procedure. The moisture content of the soil must be determined in accordance with USBR 5300 as part of this procedure.

3. Applicable Documents

3.1 *USBR Procedures*:
USBR 1012 Calibrating Balances or Scales
USBR 1025 Checking Sieves
USBR 3900 Standard Definitions of Terms and Symbols Relating to Soil Mechanics
USBR *4136 Sieve Analysis of Fine and Coarse Aggregates
USBR 5205 Preparing Soil Samples by Splitting or Quartering
USBR 5300 Determining Moisture Content of Soil and Rock by the Oven Method
USBR 5330 Performing Gradation Analysis of Fines and Sand Size Fraction of Soils, Including Hydrometer Analysis
USBR 5335 Performing Gradation Analysis of Soils Without Hydrometer-Wet Sieve

3.2 *ASTM Standards*:
C 136 Standard Method for Sieve Analysis of Fine and Coarse Aggregates
E 11 Specification for Wire-Cloth Sieves for Testing Purposes
E 323 Specification for Perforated-Plate Sieves for Testing Purposes

4. Summary of Method

4.1 Soil is separated in sizes by a series of sieves of progressively smaller openings. The mass retained on each sieve is determined and the percent of the total sample mass passing each sieve is calculated.

5. Significance and Use

5.1 The percentage and distribution of particle sizes influence the strength, permeability, and compressibility of a soil mass. The amount of fines, sand (USBR 5330), and gravel (USBR 5325) are used to obtain gradation curves. These curves are widely used for identification and classification of soils and in the assessment of in-place characteristics of a soil mass.

6. Terminology

6.1 Definitions are in accordance with USBR 3900. Terms of particular significance are:

6.1.1 *Gradation.*–The proportions by mass of a soil or fragmented rock distributed in specified particle-size ranges (ASTM definition).

6.1.2 *Gradation Analysis.*–The process of determining gradation (ASTM).

6.1.3 *Gravel.*–Particles of rock that will pass a 3-inch (75-mm) U.S.A. Standard sieve and be retained on a No. 4 (4.75-mm) sieve.

6.2 Terms not included in USBR 3900 specific to this designation are:

6.2.1 *Maximum Particle Size.*–The largest particle in a soil sample as related to sieve openings of 3-, 1-1/2-, 3/4-, 3/8-inch or the No. 4 sieve. A maximum particle size of 1-1/2-inch means the largest particle passes a 1-1/2-inch sieve, but is retained on a 3/4-inch sieve.

* *Concrete Manual*, Bureau of Reclamation, part 2, in press.

6.2.2 *Pan.*– A pan used in a set (nest) of sieves placed beneath the smallest sieve size and used to collect the particles that pass the smallest sieve opening.

7. Apparatus

7.1 *Balance or Scale.*–A balance or scale of appropriate capacity for determining moisture content. The mass of the specimen can range from 200 g up to 35 kg or more depending on:

- Maximum particle size present
- Entire sample is tested
- Representative portion of sample tested

NOTE 1.–A typical set of balances or scales that would cover the requirements of this designation are:

Readable to	*Approximate capacity*
0.01 g	200 g*
0.1 g	1000 g*
1 g	20 kg
0.01 lbm	150 lbm

*Often same apparatus.

7.2 *Balance or Scale.*–A typical balance or scale used to measure the mass of soil particles retained on each sieve must be readable to 0.01 lbm (0.1 kg or 10 g) and have a capacity of about 150 lbm (80 kg).

7.3 *Sieves.*–U.S.A. Standard series 3-, 1-1/2-, 3/4-, 3/8-inch, and No. 4 (75-, 37.5-, 19.0-, 9.5-, 4.75-mm) sieves, conforming to the requirements of ASTM E 11 or ASTM E 323.

7.4 *Cans, Containers, or Bags.*–Suitable metal can, container, or bag for sample storage and containers for measurements of mass, as required.

7.5 *Sieving Device.*–A mechanical sieve shaker (fig. 1) that causes the particles to bounce and turn so that all particles have ample opportunities in various orientations to reach the sieve openings. The agitation of particles must be such that adequate sieving is reached within a reasonable time. Adequate sieving is reached when an additional 1 minute of sieving does not change the mass on any of the sieves by more than 1.0 percent.

The sieving device illustrated in USBR 5330 may be used except that it is generally impractical for maximum particle sizes of 1-1/2 inch and larger. Care must be taken not to overload the sieves (see subpar. 8.2.2).

7.6 *Separating Device* (Optional).–A device such as shown on figure 2 may be used for separating soils on the No. 4 sieve. This device should not be used to perform a gradation analysis.

8. Precautions

8.1 *Safety Precautions*:

8.1.1 Appropriate personal protective apparel are to be worn when handling the sample and during operation of the sieving device.

8.1.2 Ear protection should be worn during operation of the mechanical sieving device.

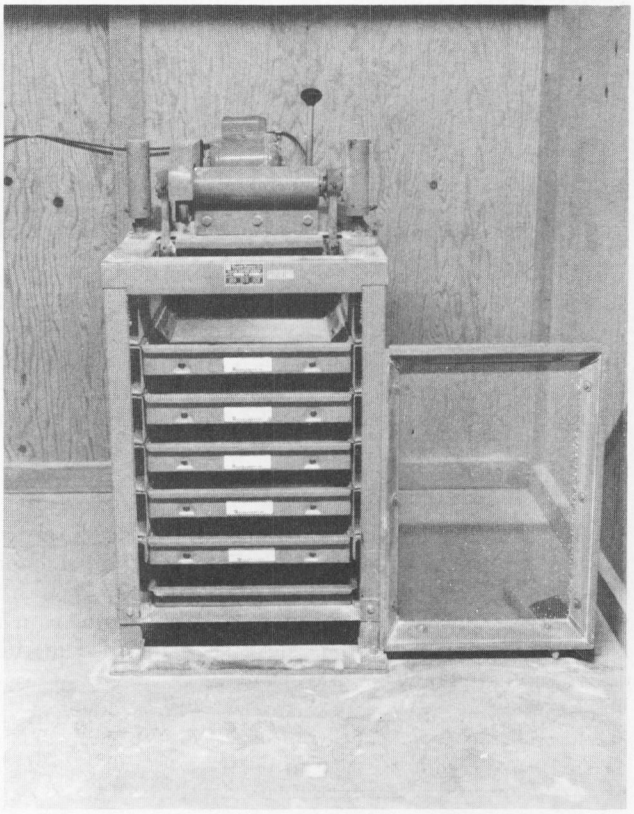

Figure 1. – Mechanical sieve shaker.

8.2 *Technical Precautions.*–

8.2.1 Due to the effects of sampling, handling, processing, and testing on some materials, results of this test may not reflect in-place conditions or the properties of the material caused by processing and placement during construction. Of particular concern are materials such as soft and/or friable decomposed granite, sandstone, shale, limestone, claystone, etc., or soils affected by air and/or oven drying. Such materials must be identified before processing and the person requesting the test should verify whether standard procedures are to be followed, whether modifications are appropriate, or whether the material should be processed and tested at all. Cautionary statements must be made on data forms and in reporting the test data.

8.2.2 Care must be taken to prevent overloading the sieves.

8.2.2.1 The total quantity of material to be sieved must be limited so that on a given sieve all the particles have an opportunity to reach sieve openings a number of times during the sieving operation. As a rule, if the material retained on a sieve at the completion of testing is spread out evenly over the area of the sieve, the layer of material should not be more than one particle thick.

8.2.2.2 For wire cloth sieves, the load on the cloth must never be so great that permanent deformation of the cloth occurs. This should be checked visually to avoid overloading the sieve.

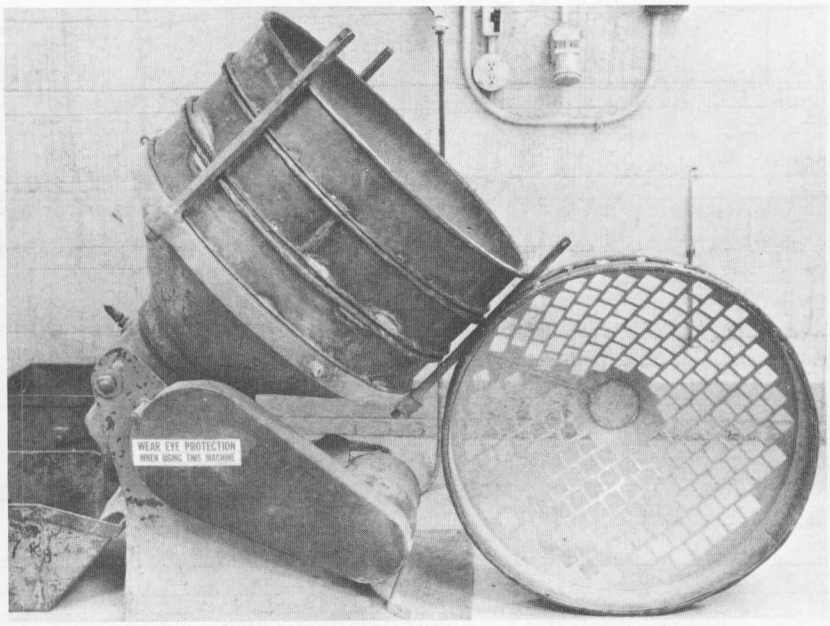

Figure 2. – Separating device.

9. Sampling, Test Specimens, and Test Units

9.1 *Sample Preparation*:

9.1.1 Prepare a test sample of minus 3-inch material in accordance with USBR 5205. The mass of the specimen to be tested depends on the maximum particle size present in the soil as follows:

Maximum particle size		*Minimum dry mass of test specimen*	
in	mm	lbm	kg
3/8	9.5	0.5*	0.25*
3/4	19.0	2.5*	1.1*
1-1/2	37.5	20	10
3	75	150	70

* For the equipment typically used in this procedure, a test specimen mass of at least 10 lbm (4.5 kg) is recommended (see subpar. 12.2.2).

These values are in terms of dry mass. Values for wet mass of the specimen will have to be adjusted based on an estimated moisture content.

10. Calibration and Standardization

10.1 Verify that equipment is currently calibrated in accordance with the applicable calibration procedure. If the calibration is not current, perform the calibration before using the equipment for this procedure.

USBR 1012 Calibrating Balances or Scales
USBR 1025 Checking Sieves

11. Conditioning

11.1 Before a soil can be separated by sieving, it must be at a moisture content such that soil lumps and/or individual soil particles will be free flowing and such that the soil can be separated by the sieving process.

11.1.1 Preparation of a sample in accordance with USBR 5205 will normally result in an appropriate moisture content for sieving.

11.1.2 If the entire amount of soil available is to be tested and is not reduced in size in accordance with USBR 5205, the soil must be conditioned to the appropriate moisture content in accordance with USBR 5205.

11.1.3 For soils to be tested at their natural moisture content, the test specimen should be separated on a No. 4 sieve with the minus No. 4 material not allowed to become drier than the natural moisture content. The plus No. 4 material can then be conditioned and tested in accordance with this designation. However, the dry mass of the minus No. 4 material must be determined and added to the dry mass of the total specimen as determined in this procedure.

12. Procedure

12.1 All data are to be recorded on a "Gradation Analysis" form as shown on figure 3 or 4.

12.2 For a specimen mass of 10 lbm (4.5 kg) or larger, all measurements of mass are to be determined and recorded to the nearest 0.01 lbm (0.01 kg).

12.2.1 A minimum specimen mass of 10 lbm (4.5 kg) is recommended when the mechanical sieving device, shown on figure 1, is used in combination with a balance or scale readable to 0.01 lbm (0.01 kg).

12.2.2 The required minimum specimen mass is 0.5 lbm for soil having a maximum particle size of 3/8-inch, and 2.5 lbm for a maximum particle size of 3/4 inch. If for some reason the specimen mass for these soils is less than 10 lbm, other combinations of sieving equipment (such as described in USBR 5330) and balances and scales

7-1451 (9-86) Bureau of Reclamation	GRADATION ANALYSIS	Designation USBR 5325-89 Designation USBR 5330-__ Designation USBR 5335-__

SAMPLE NO. Example	PROJECT	FEATURE
AREA (individual)	EXC. NO.	DEPTH

GRADATION OF GRAVEL SIZES

TESTED AND COMPUTED BY	DATE	% MOISTURE CONTENT OF + NO. 4 assumed 1.8	WET MASS OF TOTAL SPECIMEN 162.07
CHECKED BY	DATE	% MOISTURE CONTENT OF - NO. 4 12.3	TOTAL DRY MASS OF SPECIMEN 149.47

SIEVE SIZE		3" (75 mm)	1-1/2" (37.5 mm)	3/4" (19.0 mm)	3/8" (9.5 mm)	NO. 4 (4.75 mm)	PAN
MASS OF CONTAINER AND RETAINED MATERIAL			18.94	33.33	24.23	28.28	124.94
MASS OF CONTAINER			12.21	12.21	12.21	12.21	18.81
WET MASS RETAINED			6.73	21.12	12.02	16.07	106.13
DRY MASS RETAINED			6.61	20.75	11.81	15.79	94.51
DRY MASS PASSING		149.47	142.86	122.11	110.30	94.51	[X] lbm [ ] kg [ ] g
% OF TOTAL PASSING		100.0	95.6	81.7	73.8	63.2	

GRADATION OF SAND SIZES

DRY MASS OF SPECIMEN g	FACTOR = % TOTAL PASSING NO. 4 / DRY MASS OF SPECIMEN = ____ / ____ = ____
DISH NO.	DRY MASS OF SPECIMEN (SIEVED)
SIEVING TIME	DATE

SIEVE NO.	MASS RETAINED (g)	MASS PASSING (g)	FACTOR X MASS PASSING = % OF TOTAL PASSING	% OF TOTAL PASSING	PARTICLE DIAMETER	REMARKS
8					2.36 mm	
16					1.18 mm	
30					600 µm	
50					300 µm	
100					150 µm	
200					75 µm	
PAN						
TOTAL						

TESTED AND COMPUTED BY	DATE	CHECKED BY	DATE

HYDROMETER ANALYSIS

HYDROMETER NO.	DISPERSING AGENT
STARTING TIME	DATE / AMOUNT mL

TIME	TEMP °C	HYD READ	HYD CORR	CORR READ	FACTOR X CORRECT READ = % OF TOTAL PASSING	% OF TOTAL PASSING	PARTICLE DIAMETER	REMARKS
1 min							37 µm	
4 min							19 µm	
19 min							9 µm	
60 min							5 µm	AUXILIARY TESTS: USBR 5205-8 9 USBR 5300-8 9
7 h 15 min*							2 µm	
25 h 45 min*							1 µm	

TESTED AND COMPUTED BY	DATE	CHECKED BY	DATE

*Not required for standard test.

GPO 852 - 184

Figure 3. - Gradation analysis (individual method) — example.

7-1451 (9-86) Bureau of Reclamation	GRADATION ANALYSIS	Designation USBR 5325-89 Designation USBR 5330-__ Designation USBR 5335-__

SAMPLE NO. Example	PROJECT	FEATURE
AREA (cumulative)	EXC. NO.	DEPTH

GRADATION OF GRAVEL SIZES

TESTED AND COMPUTED BY	DATE	% MOISTURE CONTENT OF + NO. 4 assumed 1.8	WET MASS OF TOTAL SPECIMEN 162.07
CHECKED BY	DATE	% MOISTURE CONTENT OF - NO. 4 12.3	TOTAL DRY MASS OF SPECIMEN 149.47

SIEVE SIZE		3" (75 mm)	1-1/2" (37.5 mm)	3/4" (19.0 mm)	3/8" (9.5 mm)	NO. 4 (4.75 mm)	PAN
MASS OF CONTAINER AND RETAINED MATERIAL			18.94	40.06	52.08	68.15	124.94
MASS OF CONTAINER			12.21	12.21	12.21	12.21	18.81
WET MASS RETAINED			6.73	27.85	39.87	55.94	106.13
DRY MASS RETAINED			6.61	27.36	39.17	54.95	94.51
DRY MASS PASSING		149.47	142.86	122.11	110.30	94.52	[x] lbm [ ] kg [ ] g
% OF TOTAL PASSING		100.0	95.6	81.7	73.8	63.2	

GRADATION OF SAND SIZES

DRY MASS OF SPECIMEN g	FACTOR = % TOTAL PASSING NO. 4 / DRY MASS OF SPECIMEN = ____ = ____
DISH NO.	DRY MASS OF SPECIMEN (SIEVED)
SIEVING TIME	DATE

SIEVE NO.	MASS RETAINED (g)	MASS PASSING (g)	FACTOR X MASS PASSING = % OF TOTAL PASSING	% OF TOTAL PASSING	PARTICLE DIAMETER	REMARKS
8					2.36 mm	
16					1.18 mm	
30					600 µm	
50					300 µm	
100					150 µm	
200					75 µm	
PAN						
TOTAL						

TESTED AND COMPUTED BY	DATE	CHECKED BY	DATE

HYDROMETER ANALYSIS

HYDROMETER NO.	DISPERSING AGENT
STARTING TIME	DATE / AMOUNT mL

TIME	TEMP °C	HYD READ	HYD CORR	CORR READ	FACTOR X CORRECT READ = % OF TOTAL PASSING	% OF TOTAL PASSING	PARTICLE DIAMETER	REMARKS
1 min							37 µm	
4 min							19 µm	
19 min							9 µm	
60 min							5 µm	AUXILIARY TESTS: USBR 5205-89 USBR 5300-89
7 h 15 min*							2 µm	
25 h 45 min*							1 µm	

TESTED AND COMPUTED BY	DATE	CHECKED BY	DATE

*Not required for standard test.

GPO 852 - 184

Figure 4. – Gradation analysis (cumulative method) — example.

may be used. In this case, a balance or scale must be used such that the mass is determined and recorded to at least 0.1 percent of the total specimen mass.

12.3 Determine and record the *wet mass of total specimen* (or dry mass, if appropriate — see notes 2 and 3).

NOTE 2.–In this designation, "wet mass" refers to material that has not been ovendried and "dry mass" to material that has been ovendried or the dry mass calculated.

NOTE 3.–The gradation analysis may be performed on ovendried material. In this case, substitute "dry mass" for "wet mass" in this designation and disregard the steps pertaining to determining moisture content and calculating the dry mass. The data should be recorded in the spaces on the form for "dry mass."

12.4 Separation of specimen prior to sieving:

12.4.1 If the amount of material to be tested is greater than the capacity of the sieving equipment (do not overload the sieves), divide the specimen into appropriate portions for testing. For each portion, follow the steps in subparagraphs 12.5 through 12.11. Calculate the sum of the wet masses retained on each sieve and in the pan, and record as wet mass retained for each sieve size and in the pan and proceed with subparagraph 12.12.

12.4.2 Alternately, if the amount of material to be tested is greater than the capacity of the sieving equipment or to not overload the sieves, the specimen may be separated using a No. 4 sieve prior to testing. Separation on the No. 4 sieve also may be necessary for (1) testing the minus No. 4 portion of a soil before or during the testing of the plus No. 4, (2) convenience of test scheduling, or (3) when the plus No. 4 particles need to be soaked in water (see subpar. 12.7.1). The wet mass of the separated minus No. 4 material must be determined and then added to the wet mass of any minus No. 4 particles collected and measured during the sieving of the plus No. 4 material.

12.5 Assemble the set (nest) of sieves to be used in order of decreasing size of opening from top to bottom and place in the sieving device. The sieves may be the standard set as described in subparagraph 7.3, or others as required by the specifications covering the material to be tested. If desired, sieves coarser than the maximum particle size may be omitted from the set. However, a sieve at least one size larger than the anticipated maximum particle size should be included in the set. Additional sieve sizes may be added to restrict the amount of material on a particular sieve (see subpar. 12.4.1) or to protect individual sieves from excessive wear.

12.6 Place the soil specimen on the top sieve and turn on the sieving device. To avoid overloading the top sieve, it may be necessary to feed the soil onto the top sieve gradually. Sieve the material for about 15 minutes, or longer if necessary, to separate all the material. A satisfactory end-point is considered to have been reached when an additional one minute of sieving does not change the mass on any individual sieve by more than 1.0 percent.

12.6.1 Hand sieving may be used; however, use of a mechanical sieving device is the most common and accepted method of performing this procedure. Hand sieving must be done in accordance with the directions in USBR 4136 or ASTM C 136. If hand sieving is used for part or all of this procedure, it should be noted on the data forms.

12.7 Any significant amount of minus No. 4 particles adhering to the plus No. 4 particles must be brushed or wiped off and placed in the minus No. 4 fraction.

12.7.1 If the minus No. 4 material cannot be easily removed from the plus No. 4 particles, the plus No. 4 particles should be soaked and/or washed on a No. 4 sieve until all minus No. 4 material is removed. If tests are to be performed on the minus No. 4 material, the minus No. 4 particles must be collected and added to the minus No. 4 material and thoroughly mixed in. The plus No. 4 material must then be rescreened.

12.8 Determine and record the *mass of container(s)* to be used.

12.9 Starting with the coarsest sieve, remove all particles retained on each sieve and place in the container(s). Determine and record the *mass of container and retained material.* The mass may be determined and recorded as the mass for each individual sieve size (fig. 3) or as the mass on a cumulative basis (fig. 4). When removing the particles, take care to avoid permanent deformation of sieve openings or the sieve cloth.

12.10 Remove all particles retained in the pan and place into a container. Determine and record the *mass of container and retained material.*

12.11 Calculate and record the *wet mass retained* on each sieve size (individual or cumulative) and in the pan by subtracting the *mass of container* from the *mass of container and retained material.*

NOTE 4.–As a check, the sum of the *wet mass retained* on each sieve (or cumulative on the No. 4 sieve) and the *wet mass retained* in the pan should be about equal to the *wet mass of total specimen.*

12.12 Determine and record to the nearest 0.1 percent the moisture content of the plus No. 4 material and the moisture content of the minus No. 4 material in accordance with USBR 5300.

12.12.1 A moisture content may be assumed for the plus No. 4 material if previous tests on similar material have been performed and the value is relatively constant. Note on the form that the value is *assumed.*

12.13 Using the moisture content of the plus No. 4 material and the wet mass retained, calculate and record the *dry mass retained* on each sieve (individual or cumulative).

12.14 Using the moisture content of the minus No. 4 material and the wet mass of soil retained in the pan (passing the No. 4 sieve), calculate and record the *dry mass retained* in the pan.

12.15 Calculate and record the *total dry mass of specimen* by one of the following methods:

12.15.1 Mass determined for each individual sieve (fig. 3).–Calculate the sum of the *dry mass retained* on each sieve and in the pan. Also, record this value as *dry mass passing* under the 3-inch sieve size column (or under

the column for the next larger sieve size than the sieve size on which particles were retained).

12.15.2 Mass determined on cumulative basis (fig. 4).–Calculate the sum of the *dry mass retained* on the No. 4 sieve and the *dry mass retained* in the pan.

12.16 Calculate and record the *dry mass passing* each sieve by one of the following methods.

12.16.1 Mass determined for each individual sieve (fig. 3).–Starting with the coarsest sieve on which particles were retained, calculate the *dry mass passing* each sieve by subtracting the *dry mass retained* from the *dry mass passing* the next larger size sieve.

12.16.2 Mass determined on cumulative basis (fig. 4).–Calculate the *dry mass passing* each sieve by subtracting the *dry mass retained* from the *dry mass of total specimen.*

NOTE 5.–As a check, the *dry mass passing* the No. 4 sieve must equal (±0.01 lbm or kg)the *dry mass retained* in the pan.

12.17 Calculate and record to the nearest 0.1 percent the *percent of total passing* each sieve. Record 100.0 percent in the sieve size column that is one sieve size larger than the coarsest sieve size on which material was retained.

12.18 If required, plot the results as shown on figure 5. Typically, this procedure is performed in conjunction with USBR 5330 or 5335 to determine the gradation of the minus No. 4 material and the plot is prepared after the minus No. 4 gradation has been determined.

13. Calculations

13.1 Calculate the percent of total passing for each sieve using the following expression:

$$\text{Percent of total passing} = 100\left(\frac{\text{dry mass passing}}{\text{total dry mass of specimen}}\right)$$

14. Report

14.1 The report is to consist of a completed and checked "Gradation Analysis" form (fig. 3 or 4).

14.2 All calculations are to show a checkmark..

14.3 If required, the results are to be plotted as shown on the "Gradation Test" form (fig. 5).

14.4 For reports, summary tables, etc., the gradation percentages are generally reported to the nearest 1 percent. The percentages may be reported as either percent passing or percent retained.

14.5 In many cases, the gradation is reported in terms of percent gravel, percent sand, and percent fines. The percentages must add to 100 percent. Due to rounding, the total may be either 99 or 101 percent; 1 percent must be added to or subtracted from the component (gravel, sand, or fines) with the largest percentage so the total is 100 percent. If the percentages, when rounded to the nearest 1 percent are equal, make the adjustment to the coarser component.

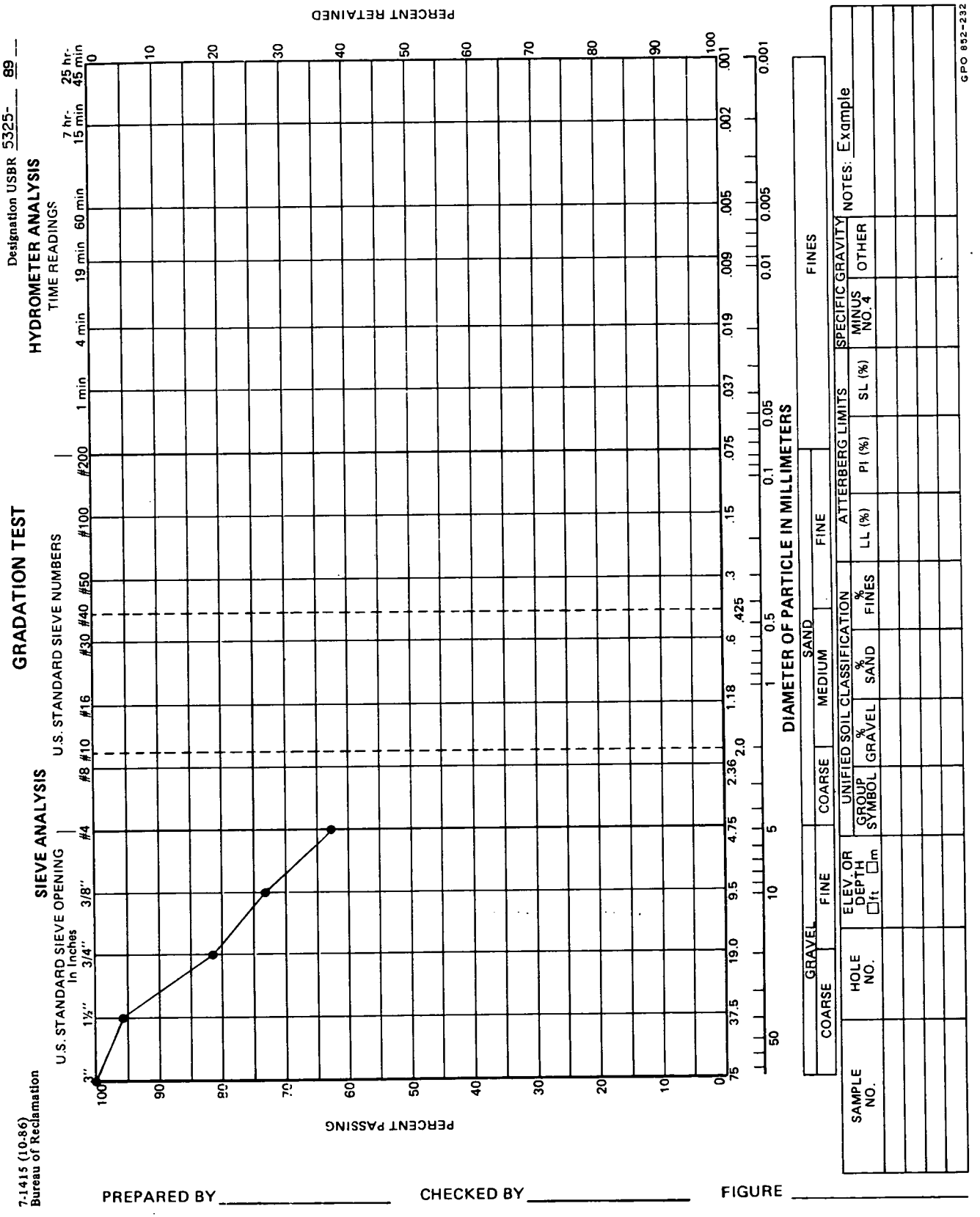

Figure 5. – Gradation test — example plot.

UNITED STATES DEPARTMENT OF THE INTERIOR
BUREAU OF RECLAMATION

USBR 5330-89

PROCEDURE FOR

PERFORMING GRADATION ANALYSIS OF FINES AND SAND SIZE FRACTION OF SOILS, INCLUDING HYDROMETER ANALYSIS

INTRODUCTION

This procedure is under the jurisdiction of the Geotechnical Services Branch, Code D-3760, Research and Laboratory Services Division, Denver Office, Denver, Colorado. The procedure is issued under the fixed designation USBR 5330. The number immediately following the designation indicates the year of acceptance or the year of last revision.

The method is similar to ASTM D 422-63, the principal difference being the sieve sizes used and the separation on the No. 4 instead of No. 10 sieve (4.75 and 2.00 mm) for the hydrometer test.

1. Scope

1.1 This designation outlines the procedure for performing gradation analysis of fines and sand size fraction of soils, including hydrometer analysis. It is used for the quantitative determination of distribution of particle sizes in soils.

1.2 The distribution of particle sizes larger than retained on the No. 200 sieve (75 μm) is determined by sieving, while the distribution of particle sizes smaller than No. 200 is determined by a sedimentation process, using a hydrometer to secure the necessary data.

1.3 If gravel size particles were present in the original soil sample, this test is usually performed in conjunction with USBR 5325.

1.4 If the particle size distribution of the minus No. 200 (75 μm) sieve size soil is not required, USBR 5335 may be used in place of this designation.

1.5 Two methods of dispersing the soil are provided (1) a mechanical stirring device, and (2) an air dispersion tube. The air dispersion method must be specially requested or specified and its use noted on the test form (see subpar. 5.3).

2. Auxiliary Tests

2.1 A soil sample must be prepared in accordance with USBR 5205 prior to performing this procedure.

3. Applicable Documents

3.1 *USBR Procedures*:
USBR 1012 Calibrating Balances or Scales
USBR 1020 Calibrating Ovens
USBR 1025 Checking Sieves
USBR 1405 Calibrating Hydrometers
USBR 3900 Standard Definitions of Terms and Symbols Relating to Soil Mechanics
USBR *4136 Sieve Analysis of Fine and Coarse Aggregates
USBR 5205 Preparing Soil Samples by Splitting or Quartering
USBR 5325 Performing Gradation Analysis of Gravel Size Fraction of Soils.
USBR 5335 Performing Gradation Analysis of Soils Without Hydrometer-Wet Sieve

3.2 *ASTM Standards*:
C 136 Standard Method for Sieve Analysis of Fine and Coarse Aggregates
E 1 ASTM Thermometers
E 11 Specification for Wire-Cloth Sieves for Testing Purposes
E 100 Specification for ASTM Hydrometers
D 422 Standard Method for Particle-Size Analysis of Soils

4. Summary of Method

4.1 A sample of minus No. 4 (4.75-mm) material is prepared and placed in a dispersing agent (usually sodium hexametaphosphate) for a period of at least 16 hours. Then it is mixed thoroughly and placed in a 1000-mL hydrometer cylinder and filled with distilled water. Hydrometer readings are taken at time intervals of 1, 4, 19, and 60 minutes after the beginning of sedimentation.

For soils with a high percentage of very small particles, readings are also taken at time intervals of 7 hours 15 minutes, and 25 hours 45 minutes after the beginning of sedimentation.

4.2 After completion of the hydrometer analysis, the material is washed on a 200-mesh sieve. The fraction retained on the No. 200 sieve is ovendried and separated on the following sieves. (The sieving is done using a powered sieve shaker.)

U.S.A. Standard series sieves	
No. 8	2.36 mm
No. 16	1.18 mm
No. 30	600 μm
No. 50	300 μm
No. 100	150 μm
No. 200	75 μm

* *Concrete Manual*, Bureau of Reclamation, part 2, in press.

4.3 After sedimentation and sieving, the percentage of particles passing specified sizes are calculated, recorded, and plotted.

5. Significance and Use

5.1 Gradation is a descriptive term which refers to the proportions by dry mass of a soil or fragmented rock distributed in specified particle-size ranges.

5.2 The gradation of a soil gives an indication of the engineering properties of the soil. Permeability, compressibility, and shear strength are all influenced by the gradation characteristics of a soil mass. Therefore, reliable determination of the amount of fines, sand, and gravel in a representative soil sample is of extreme importance for design considerations.

5.3 Normally, the mechanical stirring device is used to disperse the soil specimen. Its use may cause degradation of some soil particles. Performing the gradation analysis on a mechanically dispersed specimen and on an air-dispersed specimen may be useful in evaluating the durability and hardness of sand size particles.

6. Terminology

6.1 Definitions are in accordance with USBR 3900. Terms of particular significance are:

6.1.1 *Dispersing Agent.*–An agent used to assist in separating individual fine soil particles and to prevent them from flocculating when in suspension.

6.1.2 *Fines.*–Portion of soil finer than a No. 200 (75 μm) U.S.A. Standard sieve (ASTM definition).

6.1.3 *Gradation.*–The proportions by mass of a soil or fragmented rock distributed in specified particle-size ranges (ASTM).

6.1.4 *Gradation Analysis.*–The process of determining gradation (ASTM).

7. Apparatus

7.1 *Balance or Scale.*–A typical balance or scale used for this designation must be readable to 0.1 g and have a capacity of about 500 g.

7.2 *Soil Hydrometer.*–A soil hydrometer, graduated to read in grams per liter of suspension and conforming to the requirements for hydrometer 152H in ASTM E 100.

7.3 *Hydrometer Cylinder.*–A glass cylinder essentially 18 inches in height and 2-1/2 inches (457- by 64-mm) in diameter, and marked for a volume of 1000 mL. The inside diameter is to be such that the 1000-mL mark is 14±1 inch (355±25 mm) from the bottom of the inside.

7.4 *Stirring Apparatus* (malt mixer).–A mechanically operated stirring device in which a suitably mounted electric motor turns a vertical shaft at a speed of not less than 10,000 revolutions per minute without load. The shaft should be equipped with a replaceable stirring paddle made of metal, plastic, or hard rubber. The shaft is to be of such a length that the stirring paddle will operate not less than 1-1/2 inches (38 mm) above the bottom of the dispersion cup. A special dispersion cup conforming to either of the designs shown on figure 1 should be used.

7.5 *Water Bath* (optional).–A water bath for maintaining the soil suspension at a constant temperature during the hydrometer analysis. A satisfactory constant temperature bath is an insulated tank with automatic temperature control that maintains the soil suspension at a convenient constant temperature at or near 68 °F (20 °C). Such a device is shown on figure 2. If a constant temperature water bath is not used, a water-filled container (such as an additional hydrometer cylinder) must be used to store the hydrometer between readings. The water in this storage cylinder must be at the same temperature as the solution in the test hydrometer cylinder.

7.6 *Thermometer.*–0 to 50 °C range, 0.5° divisions, conforming to the requirements of ASTM E 1.

7.7 *Rubber Stopper.*–An appropriate size rubber stopper to adequately seal the hydrometer cylinder.

7.8 *Sodium Hexametaphosphate.*–A chemical agent in powder, crystal, or granular form, used as a dispersing agent, of technical grade or better.

7.9 *Evaporating Dish.*–A porcelain evaporating dish, 300-mL capacity, approximately 4-1/2 inches in diameter by 2 inches (115 by 50 mm) deep.

7.10 *Tubing.*–Flexible tubing of sufficient length and diameter to direct the flow of water for washing the soil specimen through a No. 200 (75-μm) sieve.

7.11 *Timing Device.*–A clock or stopwatch with a second hand.

7.12 *Sieve Set.*–A set of sieves, of square-mesh, woven-wire cloth, conforming to the requirements of ASTM E 11. A full set of sieves includes the following:

A lid	
No. 8	2.36 mm
No. 16	1.18 mm
No. 30	600 μm
No. 50	300 μm
No. 100	150 μm
No. 200	75 μm
A pan	

7.13 *Washing Sieve.*–No. 200 washing sieve may be fabricated, or 8-inch (203-mm) brass No. 200 sieve may be used.

7.14 *Sieve Shaker.*–A motor-driven electric sieve shaker, equipped with timer as shown on figure 3, should be used.

7.15 *Brush.*–A fine brass wire brush used for removing soil from the sieves and pan.

7.16 *Drying Oven.*–An oven, thermostatically controlled, preferably of the forced-draft type, and capable of maintaining a uniform temperature of 230±9 °F (110±5 °C) throughout the drying chamber.

7.17 *Air Dispersion Tube and Air Supply.*–An air dispersion tube conforming to the requirements of figure 4. The air supply must be capable of producing 2 cubic feet per minute for each dispersion tube. A water trap on the air line may be useful to remove water that condenses

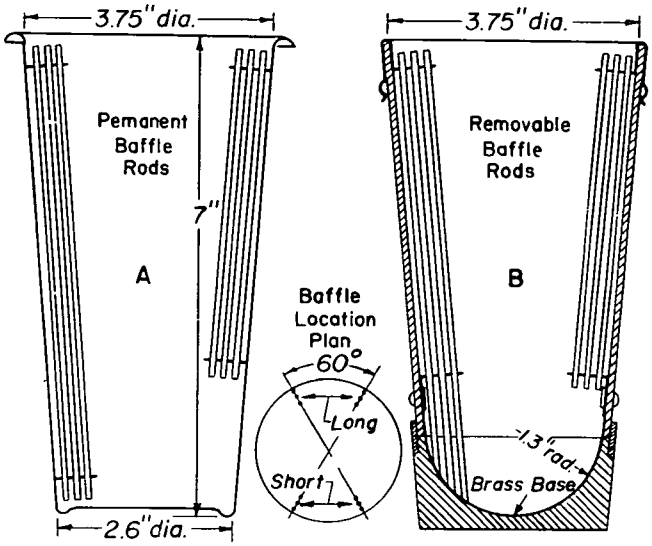

Metric Equivalents

in.	1.3	2.6	3.75
mm	33	66	95.2

Figure 1. – Dispersion cup designs [ASTM D 422].

in the air line when not in use. Otherwise, the water must be blown out of the air line before using for dispersion purposes.

7.18 *Graduated Cylinder.*–250 mL capacity, graduated in 2 mL divisions or other suitable container or method to measure 125 mL of the dispersing agent solution.

8. Reagents and Materials

8.1 Distilled water is to be used whenever water is called for in this procedure except for water in the water bath or when washing the specimen on a No. 200 sieve. Tapwater that is free of acids, alkalies, or oils and suitable for drinking may be used to fill the tank, provided the water is changed regularly (about once per week).

8.2 A 4-percent sodium hexametaphosphate solution is used to disperse the representative soil sample.

8.3 To prepare a 4-percent sodium hexametaphosphate solution, the following procedure is to be followed:

8.3.1 Fill a 1000-mL hydrometer cylinder with distilled water to approximately 750 mL.

8.3.2 Obtain 40 grams of sodium hexametaphosphate and place into the dispersion cup. Add approximately 100 mL of distilled water to the sodium hexametaphosphate. Mix the sodium hexametaphosphate and water for 5 minutes using the malt mixer or until the sodium hexametaphosphate is completely dissolved.

8.3.3 Add the solution from the dispersion cup to the hydrometer cylinder. Fill the hydrometer cylinder to the 1000-mL line with distilled water. Insert the rubber stopper and securely place it on top of the hydrometer cylinder. With one hand over the top of the hydrometer cylinder and the other on the bottom, shake the hydrometer cylinder to thoroughly mix the solution.

8.4 In some instances, an 8- or 12-percent solution may be required as a dispersing agent. The following amounts of sodium hexametaphosphate are used for the required percent solution of sodium hexametaphosphate.

Solution required, percent	*Sodium hexametaphosphate required, grams*
4	40
8	80
12	120

8.5 If an 8- or 12-percent solution is required, the procedure outlined in subparagraph 8.3 is to be used along with the appropriate amount of sodium hexametaphosphate as given in subparagraph 8.4.

8.6 A prepared sodium hexametaphosphate solution may be stored for no more than 21 days if the storage temperature remains near room temperature of 73 °F (23 °C), and for no more than 7 days if the temperature of the storage area consistently exceeds 73 °F.

8.7 All containers of the dispersing solution must have the date of preparation and percent solution marked on them.

9. Precautions

9.1 *Technical Precautions*:

9.1.1 Ensure that the hydrometer is clean, especially the reading portion of the stem, by washing the hydrometer with soapy water, then rinsing it with alcohol and again in clean water.

9.1.2 Because sodium hexametaphosphate in powder, granular, or crystalline form absorbs moisture, the material must be stored in airtight containers.

9.1.3 Due to the effects of sampling, handling, processing, and testing on some materials, results of this test may not reflect in-place conditions or the properties of the material caused by processing and placement during construction. Of particular concern are materials such as soft and/or friable decomposed granite, sandstone, shale, limestone, claystone, etc., or soils affected by air and/or ovendrying. Such materials must be identified before processing and the person requesting the test should verify whether standard procedures are to be followed, whether modifications are appropriate, or whether the material should be processed and tested at all. Cautionary statements must be made on test data forms and in reporting the test data.

9.1.4 A temperature differential may create convection currents in the solution—in the hydrometer cylinder—that would affect the hydrometer reading. When the hydrometer is read during the test, it is important that the equipment and the fluids are all at the same temperature. The test should be performed away from sources of heat or cold such as direct sunlight or heating/air conditioning vents.

10. Sampling, Test Specimens, and Test Units

10.1 Prepare a test sample of approximately 500 grams of minus No. 4 (4.75-mm) material in accordance with

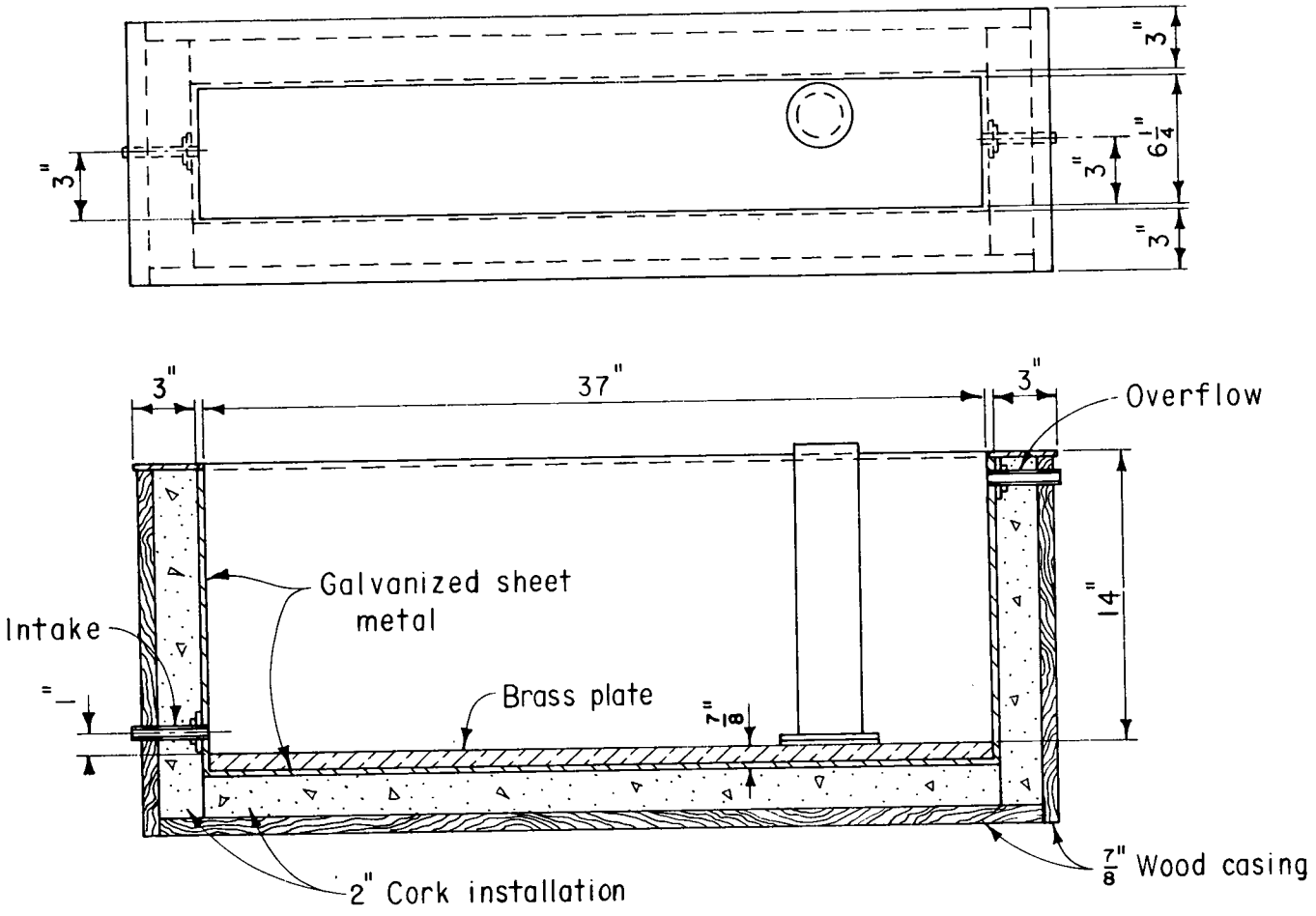

Metric Equivalents

in.	7/8	1	3	6¼	14	37
mm	22.2	25.4	76.2	158.2	356	940

Figure 2. – Constant temperature bath [ASTM D 422].

USBR 5205. If 500 grams of soil is not available, obtain at least enough soil to have an ovendried test specimen that meets the requirements of subparagraph 10.3.

10.2 Place the test sample into a suitable container and ovendry the sample for a minimum of 16 hours.

10.3 Thoroughly mix the soil and obtain a specimen of approximately 100 grams for sandy soils and about 50 grams for silty or clayey soils by splitting in accordance with USBR 5205. Determine the mass of the specimen to the nearest 0.1 g and record on the "Gradation Analysis" form as shown on figure 5.

10.4 The test specimen must be dispersed in accordance with either subparagraph 10.5 or 10.6 (see subpar. 5.3). If the air dispersion method is used, it must be noted on the test form.

10.5 *Dispersion of Soil Specimen* (mechanical stirring):

10.5.1 Place the soil specimen in an evaporating dish.

10.5.2 Add 125 mL of 4-percent sodium hexametaphosphate solution and enough distilled water to cover the soil.

10.5.3 Soak the soil specimen in the sodium hexametaphosphate solution for a period of at least 16 hours.

10.5.4 Wash the specimen into a dispersion cup with distilled water.

10.5.5 Continue adding distilled water until the dispersion cup is within 2 inches (50 mm) of being filled.

10.5.6 Mix the contents of the dispersion cup using the malt mixer for 1 minute.

10.6 *Dispersion of Soil Specimen* (air dispersion):

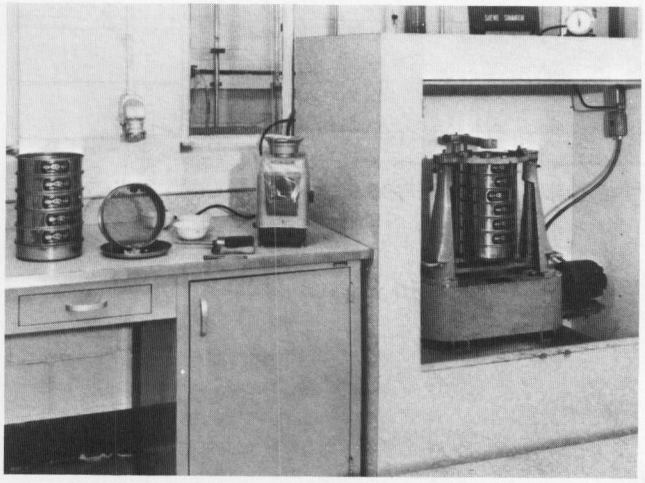

Figure 3. - Sieve analysis equipment.

10.6.1 Place the soil specimen into a hydrometer cylinder.

10.6.2 Add 125 mL of 4-percent sodium hexametaphosphate solution to the hydrometer cylinder.

10.6.3 Add enough distilled water to the hydrometer cylinder to bring the volume to about 250 mL and stir.

10.6.4 Soak the soil specimen in the sodium hexametaphosphate solution for a period of at least 16 hours.

10.6.5 Turn on the air supply to the air dispersion tube so there is a small air pressure (about 1 to 2 lbf/in^2) and insert the tube into the hydrometer cylinder.

10.6.6 Increase the air pressure to about 15 lbf/in^2 and let the mixture disperse for 10 minutes. Occasionally rinse the sides of the cylinder with distilled water. For some soils containing coarse sand particles, it may be necessary to increase the air pressure to adequately agitate and disperse the particles.

10.6.7 Decrease the air pressure to a very low pressure and slowly withdraw the air dispersion tube. Rinse the tube with distilled water as it is being withdrawn and rinse the sides of the hydrometer cylinder.

11. Calibration and Standardization

11.1 Verify that equipment is currently calibrated in accordance with the applicable calibration procedure. If the calibration is not current, perform the calibration before using the equipment for this procedure.

USBR 1012 Calibrating Balance or Scales
USBR 1020 Calibrating Ovens
USBR 1025 Checking Sieves
USBR 1405 Calibrating Hydrometers

12. Conditioning

12.1 A water bath is recommended for maintaining the soil suspension at a constant temperature during the hydrometer analysis.

12.2 The temperature of the soil suspension and water bath should be checked to ensure that they remain within the range of temperatures bracketed during calibration of the hydrometer (USBR 1405).

13. Procedure

13.1 All data are to be recorded on the "Gradation Analysis" form as shown on figure 5.

13.2 Record the hydrometer number.

13.3 Place the dispersed soil specimen that was prepared according to subparagraph 10.5 into a hydrometer cylinder or take the hydrometer cylinder containing the specimen as prepared in subparagraph 10.6 and fill the cylinder to a level approximately 2 inches (50 mm) below the 1000-mL mark with distilled water. The hydrometer cylinder and its contents, the constant temperature water bath (or extra hydrometer cylinder filled with water), and the hydrometer must all be at the same temperature before starting the test.

13.4 Place a rubber stopper over the mouth of the hydrometer cylinder. With one hand over the top of the hydrometer cylinder and the other on the hydrometer cylinder bottom, thoroughly mix the contents by turning the cylinder end over end for 1 minute.

13.5 Place the hydrometer cylinder into the constant temperature water bath (if available) and start the timing device.

13.6 Remove the stopper and quickly and carefully wash into the cylinder—with distilled water—any soil that may be present on the stopper or along the top of hydrometer cylinder. The water level should be approximately at the 1000-mL mark.

13.7 Carefully place the hydrometer into the hydrometer cylinder. Record hydrometer readings after elapsed times of 1, 4, 19, and 60 minutes. The hydrometer is read to the nearest 0.5 gram per liter at the top of the menicus formed by the suspension around its stem.

NOTE 1.–When the hydrometer is initially placed in the dispersed soil specimen, foam may appear round the hydrometer stem making it difficult to read. A few drops of alcohol can be added to remove the foam and aid in making an accurate reading of the hydrometer.

13.8 Record the temperature of the liquid in the hydrometer cylinder to the nearest 0.5 °C at each hydrometer reading interval. Over the period of 60 minutes the temperature of the solution in the hydrometer cylinder must not vary by more than ±2 °C. If it does, the test must be abandoned and started over.

13.9 After the 4-minute reading, remove the hydrometer from the hydrometer cylinder after each reading and wash off the hydrometer in the constant temperature water bath. Place the hydrometer in the constant temperature water bath until it is needed for the next reading.

NOTE 2.–If a constant temperature water bath is not available, the hydrometer is to be stored between readings in a water-filled hydrometer cylinder. The water is to be of the quality described in subparagraph 8.1. The water must be at the same temperature as the solution in the test hydrometer cylinder.

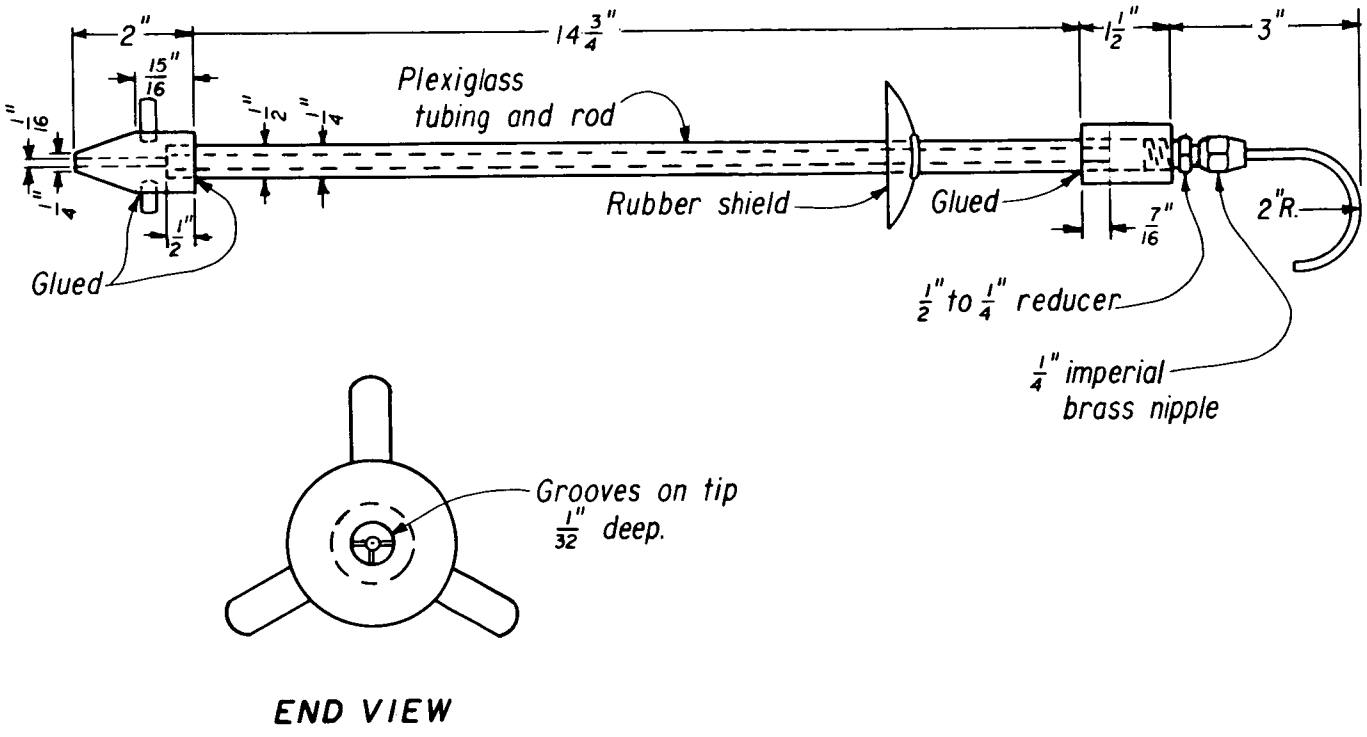

Figure 4. – Air dispersion tube. 101-D-523

13.10 Place the hydrometer in the hydrometer cylinder approximately 30 seconds before subsequent readings are to be taken.

13.11 If the 60-minute reading indicates that 40 percent or more of the specimen is smaller than the 0.005-mm size, continue the test by taking temperature and hydrometer readings at 7-hour 15-minute and 25-hour and 45-minute time intervals. If the 60-minute reading indicates that less than 40 percent of the specimen is smaller than the 0.005-mm size, the test is complete. (See subpars. 14.3 and 14.4 for the necessary calculations.) If the temperature is more than ±2 °C from the last temperature reading, keep taking temperature readings over the next 30 minutes to ascertain whether the system was at equilibrium when the hydrometer reading was made. If more than ±2 °C temperature change occurred in the 30-minute period, do not use the reading.

13.12 After the hydrometer readings have been completed, carefully wash the soil specimen on a No. 200 sieve until all fines are removed.

13.13 Pour the remaining soil into an evaporating dish and decant excess water.

13.14 Place the evaporating dish into an oven at 230±9 °F (110±5 °C) and dry for 16 hours.

13.15 Remove the specimen from the oven after 16 hours and obtain the dry mass of the specimen.

13.16 Place the specimen into the top sieve of a sieve set and place the lid on the top sieve. Place the sieve set into a sieve shaker. The sieve set should consist of the six sizes noted in subparagraph 7.12.

13.16.1 Hand sieving may be used; however, use of a mechanical sieving device is the most common and accepted method of performing this procedure. Hand sieving must be done in accordance with the directions in USBR 4136 or ASTM C 136. If hand sieving is used for part or all of this procedure, it should be noted on the data forms.

13.17 Sieve the soil specimen for approximately 15 minutes using the powered sieve shaker and record the mass of the soil retained on each sieve to the nearest 0.1 gram as shown on figure 5.

13.18 Calculate and record to 0.1 percent the percent of total soil mass passing each size for both the hydrometer and sieve analysis.

13.19 Plot the percent of total mass passing versus the particle diameter as shown on figure 6.

14. Calculations

14.1 Computations required on the "Gradation Analysis" form are divided into three parts:

- Gradation of gravel sizes
- Gradation of sand sizes
- Hydrometer analysis

14.2 *Gradation of Gravel Sizes.*–The method and calculations required to determine the percentages and distribution of particles larger than the No. 4 sieve size are outlined in USBR 5325.

14.3 *Gradation of Sand Sizes*:

14.3.1 Calculate the factor used to compute the percentage of the total sample mass passing a given sieve or the percentage of the total sample mass smaller than a given particle size as follows:

$$F = \frac{W, \%}{W} \quad (1)$$

where:
F = percent factor, %/g (record to 0.001)
$W, \%$ = percent of total sample mass passing the No. 4 (4.75-mm) sieve
W = total dry mass of minus No. 4 sample, g

14.3.2 Calculate the mass of soil passing each sieve using the following expression:

Dry mass passing, g = dry mass of sample, g - dry mass retained, g (2)

14.3.3 Calculate the "*% of total passing*" each sieve by multiplying the mass passing each sieve, "*mass passing*," on the form by the factor F calculated in accordance with subparagraph 14.3.1.

14.4 *Hydrometer Analysis*:

14.4.1 The hydrometer reading obtained is corrected using the following expression:

$$(1) = (2) - (3) \quad (3)$$

where:
(1) = corrected hydrometer reading
(2) = hydrometer reading obtained from test
(3) = hydrometer correction obtained from USBR 1405

NOTE 3.-The hydrometer correction value can be either positive or negative. Care should be taken when applying this correction to ensure that the proper mathematical sign is used.

14.4.2 Calculate the percentage of the total sample mass smaller than a given particle size.

$$(4) = F(1) \quad (4)$$

where:
(4) = percent of total mass passing, %
F = factor calculated in accordance with subparagraph 14.3.1
(1) = corrected hydrometer reading

NOTE 4.-The results of several hundred tests on widely different soil types indicated that the maximum size particles in suspension for any given time of sedimentation varied over a comparatively narrow range, and was sufficiently independent of temperature, hydrometer reading, and soil type that the determination of the maximum particle size in suspension—based on hydrometer reading times—is sufficiently accurate for analyzing soils for construction purposes. If a more accurate particle size determination is desired, the method given in ASTM D 422 may be used.

15. Report

15.1 The report is to consist of the completed and checked:
"Gradation Analysis" form (fig. 5).
"Gradation Test" plot (fig. 6).

15.2 All calculations are to show a checkmark and all plotting must be checked.

15.3 For reports, summary tables, etc., the gradation percentages are generally reported to the nearest 1 percent. The percentages may be reported as either percent passing or percent retained.

15.4 In many cases, the gradation is reported in terms of percent gravel, percent sand, and percent fines. The percentages must add to 100 percent. Due to rounding, the total may be either 99 or 101 percent; 1 percent must be added to or subtracted from the component (gravel, sand, or fines) with the largest percentage so the total is 100 percent. If the percentages, when rounded to the nearest 1 percent are equal, make the adjustment to the coarser component.

APPENDIX

X1. COMMENTS ON CERTAIN ASPECTS OF THE HYDROMETER TEST

X1.1 A review of procedures and standards published by various sources revealed a variety of recommended reading times for the hydrometer test. The times traditionally used by the Bureau of Reclamation (and continued with this procedure) were selected based on the following rationale.

X1.2 It has been found to be convenient to assume a value of specific gravity for the hydrometer test. The value assumed is 2.65. This is a reasonable assumption, and moderate variations from this value have only a small effect on test results. By assuming a value of specific gravity, it was possible to print gradation forms with both particle diameter and time of reading values on the abscissa. This eliminates the need to calculate Stoke's Law (or use a nomograph) for each reading, thus reducing the chance for error. The particular times selected — at which readings are to be taken — were based on both convenience in performing the test, and in obtaining data points which have approximately equal spacing when plotted on the form. The three longer time readings (60 min, 7 h 15 min, and 25 h 45 min) correspond to particular particle sizes of interest (0.005, 0.002, and 0.001 mm, respectively).

X1.3 There are various recommendations concerning storage of the hydrometer between readings. These recommendations range from placing in clean water to distilled or demineralized water. While distilled water is required for preparing the soil suspension, the hydrometer may be stored between readings in either distilled water or tapwater that is free of acids, alkalies, or oils and is suitable for drinking. The tapwater will not cause a flocculating reaction with the soil, and allows laboratories that use water baths for controlling hydrometer test temperatures to store the hydrometer in the water bath between readings. Test results are not affected as long as the hydrometer bath water is changed regularly (about once per week).

7-1451 (9-86) Bureau of Reclamation	GRADATION ANALYSIS	Designation USBR 5325-__ Designation USBR 5330-89 Designation USBR 5335-__

SAMPLE NO.	PROJECT	FEATURE
AREA	EXC. NO.	DEPTH

GRADATION OF GRAVEL SIZES

TESTED AND COMPUTED BY	DATE	% MOISTURE CONTENT OF + NO. 4	WET MASS OF TOTAL SPECIMEN
CHECKED BY	DATE	% MOISTURE CONTENT OF - NO. 4	TOTAL DRY MASS OF SPECIMEN

SIEVE SIZE		3" (75 mm)	1-1/2" (37.5 mm)	3/4" (19.0 mm)	3/8" (9.5 mm)	NO. 4 (4.75 mm)	PAN
MASS OF CONTAINER AND RETAINED MATERIAL							
MASS OF CONTAINER							
WET MASS RETAINED							
DRY MASS RETAINED							
DRY MASS PASSING		(example from U.S.B.R. 5325)					☐ lbm ☐ kg ☐ g
% OF TOTAL PASSING		100.0	95.6	81.7	73.8	63.2	

GRADATION OF SAND SIZES

DRY MASS OF SPECIMEN	59.1 g	FACTOR = % TOTAL PASSING NO. 4 / DRY MASS OF SPECIMEN = 63.2 / 59.1 =	1.069
DISH NO. 17	DRY MASS OF SPECIMEN (SIEVED) 39.2		
SIEVING TIME 15 min.	DATE		

SIEVE NO.	MASS RETAINED (g)	MASS PASSING (g)	FACTOR X MASS PASSING = % OF TOTAL PASSING	% OF TOTAL PASSING	PARTICLE DIAMETER	REMARKS
8	3.4	55.7		59.5	2.36 mm	
16	8.3	50.8		54.3	1.18 mm	
30	14.2	44.9		48.0	600 μm	
50	22.1	37.0		39.6	300 μm	
100	30.8	28.3		30.3	150 μm	
200	39.0	20.1		21.5	75 μm	
PAN	0.1					
TOTAL	39.1					

TESTED AND COMPUTED BY	DATE	CHECKED BY	DATE

HYDROMETER ANALYSIS

HYDROMETER NO. 189			DISPERSING AGENT Sodium Hexametaphosphate 4%
STARTING TIME 10:15	DATE		AMOUNT 125 mL

TIME	TEMP °C	HYD READ	HYD CORR	CORR READ	FACTOR X CORRECT READ = % OF TOTAL PASSING	% OF TOTAL PASSING	PARTICLE DIAMETER	REMARKS
1 min	27.0	16.5	3.5	13.0		13.9	37 μm	
4 min	27.0	11.0	3.5	7.5		8.0	19 μm	
19 min	27.0	8.0	3.5	4.5		4.8	9 μm	
60 min	27.0	6.5	3.5	3.0		3.2	5 μm	AUXILIARY TESTS: USBR 5205-8 9 USBR 5300-__
7 h 15 min*							2 μm	
25 h 45 min*							1 μm	

TESTED AND COMPUTED BY	DATE	CHECKED BY	DATE

*Not required for standard test.

GPO 853 - 659

Figure 5. – Gradation analysis — example.

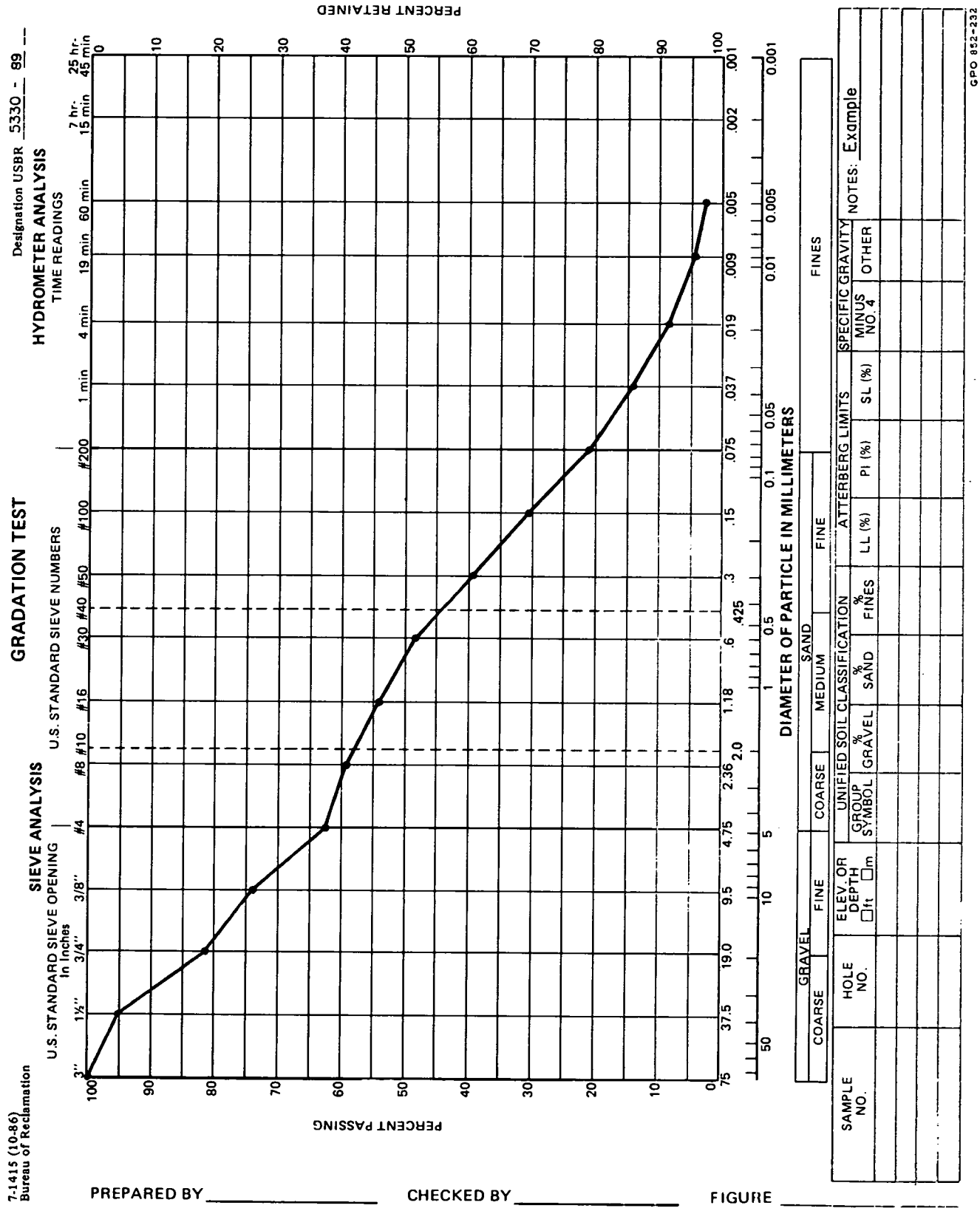

Figure 6. - Gradation test — gradation analysis data plot — example.

UNITED STATES DEPARTMENT OF THE INTERIOR
BUREAU OF RECLAMATION

USBR 5335-89

PROCEDURE FOR

PERFORMING GRADATION ANALYSIS OF SOILS WITHOUT HYDROMETER-WET SIEVE

INTRODUCTION

This procedure is under the jurisdiction of Geotechnical Services Branch, code D-3760, Research and Laboratory Services Division, Denver Office, Denver, Colorado. The procedure is issued under the fixed designation USBR 5335. The number immediately following the designation indicates the year of acceptance or the year of last revision.

1. Scope

1.1 This designation outlines the procedure for determining the amount of soil finer than the No. 200 (75 μm) sieve and performing gradation analysis of the sand size fraction.

1.2 The amount of material finer than the No. 200 (75 μm) sieve is determined by wet sieving and the distribution of particle sizes larger than 75 μm (retained on the No. 200 sieve) is determined by dry sieving.

1.3 If gravel size particles were present in the original soil sample, this test is usually performed in conjunction with USBR 5325.

1.4 Two methods of dispersing the soil are provided (1) a mechanical stirring device, and (2) an air dispersion tube. The air dispersion method must be specially requested or specified and its use noted on the test form (see subpar. 5.3).

1.5 This procedure is used when a standard gradation analysis is required. When a quick, approximate determination of the percent fines in a soil is needed, USBR 4117, ASTM C 117, or ASTM D 1140 may be used.

2. Auxiliary Tests

2.1 A soil sample must be prepared in accordance with USBR 5205 prior to performing this procedure.

3. Applicable Documents

3.1 *USBR procedures*:
USBR 1012 Calibrating Balances or Scales
USBR 1020 Calibrating Ovens
USBR 1025 Checking Sieves
USBR 3900 Standard Definitions of Terms and Symbols Relating to Soil Mechanics
USBR *4117 Materials Finer Than No. 200 (75-μm) Sieve in Mineral Aggregates by Washing
USBR *4136 Sieve Analysis of Fine and Coarse Aggregates
USBR 5205 Preparing Soil Samples by Splitting or Quartering
USBR 5325 Performing Gradation Analysis of Gravel Size Fraction of Soils

3.2 *ASTM Standard*:
E 11 Specification for Wire-Cloth Sieves for Testing Purposes
C 117 Standard Test Method C for Materials Finer Than 75-μm (No. 200) Sieve in Mineral Aggregates by Washing
D 1140 Standard Test Method for Amount of Material in Soils Finer Than the No. 200 (75-μm) Sieve.

4. Summary of Method

4.1 A sample of minus No. 4 (4.75 mm) material is prepared and placed in a dispersive agent (usually sodium hexametaphosphate) for a period of at least 2 hours. Then it is thoroughly mixed and washed on a No. 200 sieve. The fraction retained on the No. 200 (75 μm) sieve is ovendried and separated on U.S.A. Standard sieves No. 8, 16, 30, 50, 100, and 200 (2.36 mm, 1.18 mm, 600 μm, 300 μm, 150 μm, and 75 μm, respectively). The sieving is done using a powered sieve shaker.

4.2 After sieving, the percentage of particles passing specified sizes are calculated, recorded, and plotted.

5. Significance and Use

5.1 Gradation is a descriptive term which refers to the proportions by dry mass of a soil or fragmented rock distributed in specified particle-size ranges.

5.2 The gradation of a soil gives an indication of the engineering properties of the soil. Permeability, compressibility, and shear strength are all influenced by the gradation characteristics of a soil mass. Therefore, reliable determination of the amount of fines, sand, and gravel in a representative soil sample is of extreme importance for design considerations.

5.3 Normally, the mechanical stirring device is used to disperse the soil specimen. Its use may cause degradation of some soil particles. Performing the gradation analysis on a mechanically dispersed specimen and on an air dispersed specimen may be useful in evaluating the durability and hardness of sand size particles.

6. Terminology

6.1 Definitions are in accordance with USBR 3900. Terms of particular significance are:

* *Concrete Manual*, Bureau of Reclamation, part 2, in press.

6.1.1 *Dispersing Agent.*–An agent used to assist in separating individual fine soil particles and to prevent them from flocculating when in suspension.

6.1.2 *Fines.*–Portions of soil finer than a No. 200 (75 μm) U.S.A. Standard sieve (ASTM definition).

6.1.3 *Gradation.*–The proportions by dry mass of a soil or fragmented rock distributed in specified particle-size ranges (ASTM definition).

6.1.4 *Gradation Analysis.*–The process of determining gradation (ASTM).

7. Apparatus

7.1 *Balance or Scale.*–A typical balance of scale used for this designation must be readable to 0.1 g and have a capacity of about 500 g.

7.2 *Stirring Apparatus* (malt mixer).–A mechanically operated stirring device in which a suitably mounted electric motor turns a vertical shaft at a speed of not less than 10,000 revolutions per minute without load. The shaft should be equipped with a replaceable stirring paddle made of metal, plastic, or hard rubber. The shaft is to be of such a length that the stirring paddle will operate not less than 1-1/2 inches (38 mm) above the bottom of the dispersion cup. A special dispersion cup conforming to either of the designs shown on figure 1 should be provided.

7.3 *Sodium Hexametaphosphate.*–A chemical agent in powder, crystal, or granular form, used as a dispersing agent, of technical grade or better.

7.4 *Evaporating Dish.*–A porcelain evaporating dish, 300-mL capacity, approximately 4-1/2 inches (115 mm) in diameter by 2 inches (50 mm) deep.

7.5 *Hydrometer Cylinder.*–A glass cylinder 18 inches (457 mm) in height and 2-1/2 inches (63.5 mm) in diameter, and marked for a volume of 1000 mL. The inside diameter is to be such that the 1000-mL mark is 14±1 inch (360±20 mm) from the bottom on the inside.

7.6 *Rubber Stopper.*–An appropriate size rubber stopper to seal the hydrometer cylinder.

7.7 *Tubing.*–Flexible rubber tubing of sufficient length and diameter to be used for washing the soil specimen through a No. 200 (75 μm) sieve.

7.8 *Sieve Set.*–A set of sieves of square-mesh woven-wire cloth, conforming to the requirements of ASTM E 11. A set of sieves includes the following:

A lid	
No. 8	2.36 mm
No. 16	1.18 mm
No. 30	600 μm
No. 50	300 μm
No. 100	150 μm
No. 200	75 μm
A pan	

7.9 *Washing Sieve.*–No. 200 washing sieve may be fabricated, or an 8-inch diameter (203-mm) brass No. 200 sieve may be used.

7.10 *Sieve Shaker.*–A motor-driven electric sieve shaker, equipped with timer as shown on figure 2 should be used.

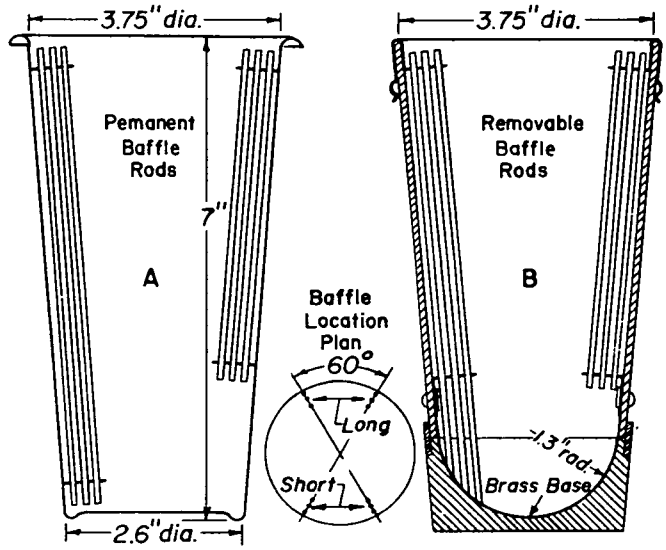

Metric Equivalents

in.	1.3	2.6	3.75
mm	33	66	95.2

Figure 1. – Dispersion cup designs [ASTM D 422].

7.11 *Brush.*–A fine brass wire brush used for removing soil from the sieves and pan.

7.12 *Drying Oven.*–An oven, thermostatically controlled, perferably of the forced-draft type, and capable of maintaining a uniform temperature of 230±9 °F (110±5 °C) throughout the drying chamber.

7.13 *Air Dispersion Tube and Air Supple.*–An air dispersion tube conforming to the requirements of figure 3. The air supply must be capable of producing 2 cubic feet per minute for each dispersion tube. A water trap on the air line may be useful to remove water that condenses in the air line when not in use. Otherwise, the water must be blown out of the air line before using for dispersion purposes.

7.14 *Graduated Cylinder.*–250 mL capacity, graduated in 2 mL divisions or other suitable container or method to measure 125 mL of the dispersing agent solution.

8. Reagents and Materials

8.1 Tapwater that is free of acids, alkalies, or oils and is suitable for drinking may be used for washing the sample.

8.2 A 4-percent sodium hexametaphosphate solution is used to disperse the representative soil sample.

8.3 To prepare a 4-percent sodium hexametaphosphate solution, the following procedure is to be followed:

8.3.1 Fill a 1000-mL hydrometer cylinder with distilled water to approximately 750 mL.

8.3.2 Obtain 40 grams of sodium hexametaphosphate and place into the dispersion cup. Add approximately 100 mL of distilled water to the sodium hexametaphosphate. Mix the sodium hexametaphosphate and water for about 5 minutes using the malt mixer or until the sodium hexametaphosphate completely dissolves.

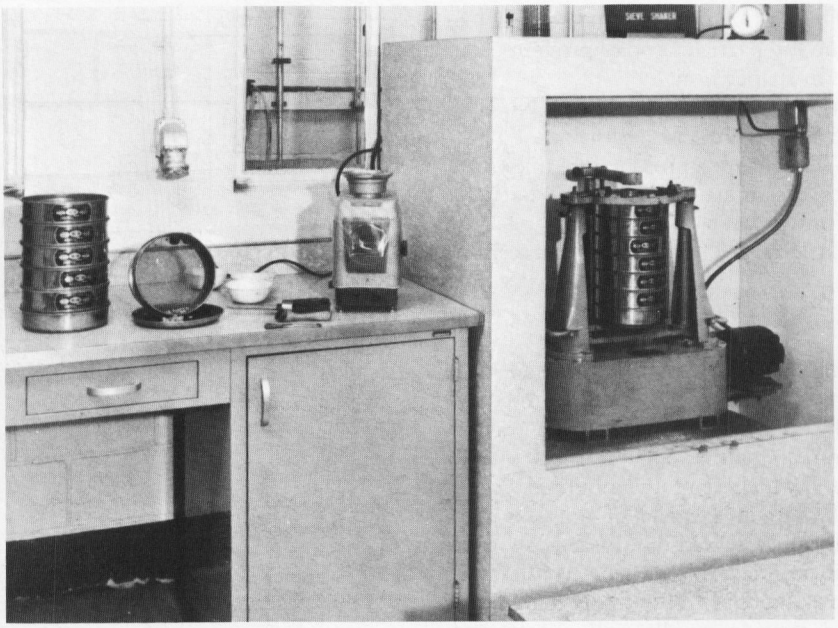

Figure 2. – Sieve analysis equipment.

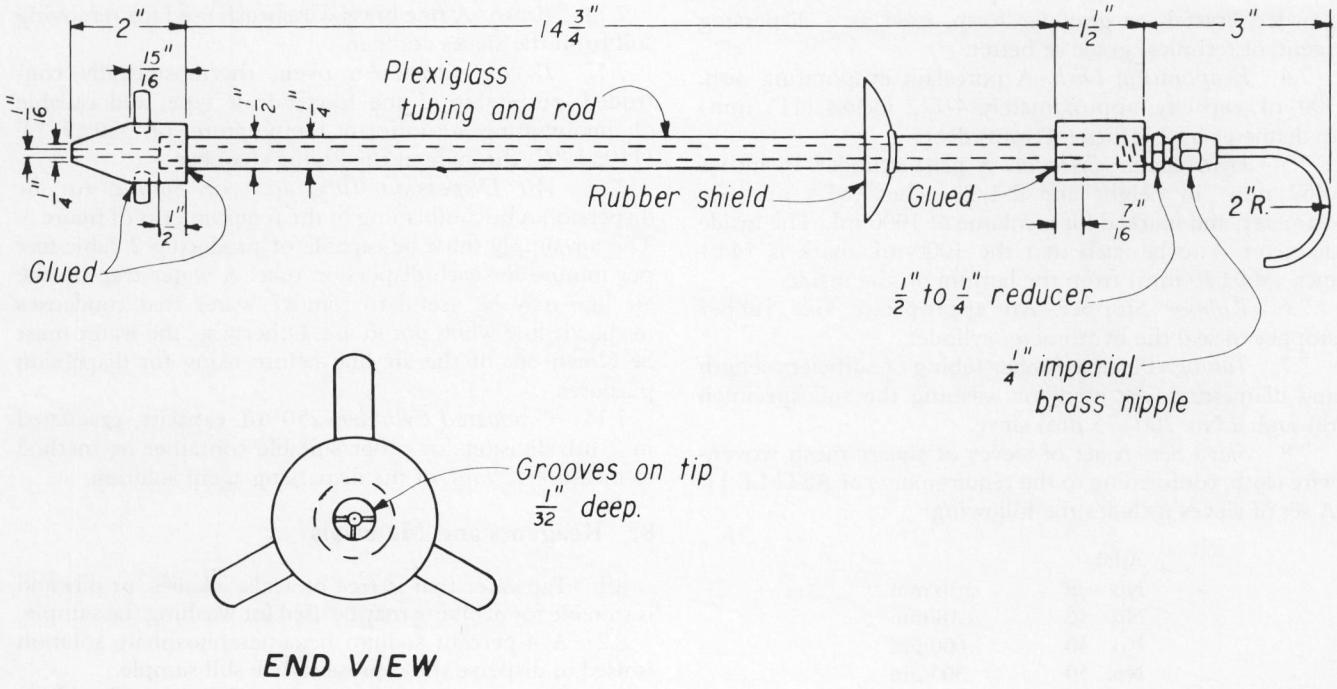

Figure 3. – Air dispersion tube. 101-D-523

8.3.3 Add the solution from the dispersion cup to the hydrometer cylinder. Fill the hydrometer cylinder to the 1000-mL line with distilled water. Securely place the rubber stopper on top of the hydrometer cylinder. With one hand over the top of the hydrometer cylinder and the other on the bottom, shake the hydrometer cylinder to thoroughly mix the solution.

8.4 A prepared sodium hexametaphosphate solution may be stored for no more than 21 days if the storage temperature remains near 73 °F (23 °C), and for no more

than 7 days if the temperature of the storage area consistently exceeds 73 °F (23 °C).

8.5 All bottles containing the dispersing solution must have the date of preparation and percent solution marked on them.

9. Precautions

9.1 *Technical Precautions*:

9.1.1 Because sodium hexametaphosphate in powder, granular, or crystalline form absorbs moisture, the material must be stored in airtight containers.

9.1.2 Due to the effects of sampling, handling, processing, and testing on some materials, results of this test may not reflect in-place conditions or the properties of the material caused by processing and placement during construction. Of particular concern are materials such as soft and/or friable decomposed granite, sandstone, shale, limestone, claystone, etc., or soils affected by air and/or ovendrying. Such materials must be identified before processing and the person requesting the test should verify whether standard procedures are to be followed, whether modifications are appropriate, or whether the material should be processed and tested at all. Cautionary statements must be made on test data forms and in reporting the test data.

10. Sampling, Test Specimens, and Test Units

10.1 Prepare a test sample of approximately 500 grams of minus No. 4 (4.75-mm) material in accordance with USBR 5205. If 500 g of soil is not available, obtain at least enough soil to have an ovendried test specimen that meets the requirements of subparagraph 10.3.

10.2 Place the test sample into a suitable container and ovendry the sample for a minimum of 16 hours.

10.3 Thoroughly mix the soil and obtain a specimen of approximately 100 grams for sandy soils and approximately 50 grams for silty or clayey soils by splitting in accordance with USBR 5205. Determine the mass of the specimen to the nearest 0.1 g and record on the "Gradation Analysis" form as shown on figure 4.

10.4 The test specimen must be dispersed in accordance with either subparagraph 10.5 or 10.6 (see subpara. 5.3). If the air dispersion method is used, it must be noted on the test form.

10.5 *Dispersion of Soil Specimen* (mechanical stirring):

10.5.1 Place the soil specimen in an evaporating dish.

10.5.2 Add 125 mL of 4 percent sodium hexametaphosphate solution and enough water to cover the soil.

10.5.3 Soak the soil specimen in the sodium hexametaphosphate solution for a period of at least 2 hours.

10.5.4 Wash the specimen into a dispersion cup with distilled water.

10.5.5 Continue adding distilled water until the dispersion cup is within 2 inches (50 mm) of being filled.

10.5.6 Mix the contents of the dispersion cup using the malt mixer for 1 minute.

10.6 *Dispersion of Soil Specimen* (air dispersion):

10.6.1 Place the soil specimen into a hydrometer cylinder.

10.6.2 Add 125 mL of 4-percent sodium hexametaphosphate solution to the hydrometer cylinder.

10.6.3 Add enough distilled water to the hydrometer cylinder to bring the volume to about 250 mL and stir.

10.6.4 Soak the soil specimen in the sodium hexametaphosphate solution for a period of at least 2 hours.

10.6.5 Turn on the air supply to the air dispersion tube so there is a small air pressure (about 1 to 2 lbf/in^2) and insert the tube into the hydrometer cylinder.

10.6.6 Increase the air pressure to about 15 lbf/in^2 and let the mixture disperse for 10 minutes. Occasionally rinse the sides of the cylinder with distilled water. For some soils containing coarse sand particles, it may be necessary to increase the air pressure to adequately agitate and disperse the particles.

10.6.7 Decrease the air pressure to a very low pressure and slowly withdraw the air dispersion tube. Rinse the tube with distilled water as it is being withdrawn and rinse the sides of the hydrometer cylinder.

11. Calibration and Standardization

11.1 Verify that equipment is currently calibrated in accordance with the applicable calibration procedure. If the calibration is not current, perform the calibration before using the equipment for this procedure.

USBR 1012 Calibrating Balance or Scales
USBR 1020 Calibrating Ovens
USBR 1025 Checking Sieves

12. Conditioning

12.1 After dispersion and mixing as outlined in either subparagraph 10.5 or 10.6, the specimen is ready for testing.

13. Procedure

13.1 All data are to be recorded on the "Gradation Analysis" form as shown on figure 4.

13.2 Pour the dispersed soil specimen prepared according to subparagraph 10.5 or 10.6 onto a No. 200 sieve and carefully wash the specimen until all fines are removed.

13.3 Pour the remaining soil into an evaporating dish and decant excess water.

13.4 Place the evaporating dish into an oven at 230±9 °F (110±5 °C) and dry for 16 hours.

13.5 Remove the specimen from the oven after 16 hours and obtain the dry mass of the specimen. Record the mass as shown on figure 4.

13.6 Place the specimen into the top sieve of a sieve set and place the lid on the top sieve. Place the sieve set into a sieve shaker. The sieve set should consist of six sizes noted in subparagraph 7.8.

13.6.1 Hand sieving may be used; however, use of a mechanical sieving device is the most common and

accepted method of performing this procedure. Hand sieving must be done in accordance with the directions in USBR 4136 or ASTM C 136. If hand sieving is used for part or all of this procedure, it should be noted on the data forms.

13.7 Sieve the soil specimen for about 15 minutes using the powered sieve shaker and record cumulative masses of the soil retained on each sieve to the nearest 0.1 gram as shown on figure 4.

13.8 Calculate and record to 0.1 percent the percent of total passing of soil mass for each sieve.

13.9 Plot the percent of total mass passing versus the diameter of particle as shown on figure 5.

14. Calculations

14.1 Computations required on the "Gradation Analysis" form are divided into three parts:

- Gradation of gravel sizes
- Gradation of sand sizes
- Hydrometer analysis

14.2 *Gradation of Gravel Sizes.*–The method and calculations required to determine the percentages and distribution of particles larger than the No. 4 sieve size are outlined in USBR 5325.

14.3 *Gradation of Sand Sizes*:

14.3.1 Calculate the factor used to compute the percentage of the total sample mass passing a given sieve or the percentage of the total sample mass smaller than a given particle size as follows:

$$F = \frac{W, \%}{W} \qquad (1)$$

where:

F = percentage factor, %/g (record to 0.001)
$W, \%$ = percent of total sample mass passing the No. 4 (4.75-mm) sieve
W = total dry mass of minus No. 4 sample, g

14.3.2 Calculate the dry mass of soil passing each sieve using the following expression:

Dry mass passing, g = total dry mass of sample, g – dry mass retained, g (2)

14.3.3 Calculate the "% of total mass passing" each sieve by multiplying the mass passing each sieve, "mass passing," on the test form by the factor F calculated in accordance with subparagraph 14.3.1.

14.4 *Hydrometer Analysis.*–The hydrometer analysis portion of the form is not used as a part of this procedure.

15. Report

15.1 The report is to consist of the following completed and checked:

"Gradation Analysis" test form (fig. 4).

"Gradation Test" plot (fig. 5).

15.2 All calculations are to show a checkmark and all plotting must be checked.

15.3 For reports, summary tables, etc., the gradation percentages are generally reported to the nearest 1 percent. The percentages may be reported as either percent passing or percent retained.

15.4 In many cases, the gradation is reported in terms of percent gravel, percent sand, and percent fines. The percentages must add to 100 percent. Due to rounding, the total may be either 99 or 101 percent; 1 percent must be added to or subtracted from the component (gravel, sand, or fines) with the largest percentage so the total is 100 percent. If the percentages, when rounded to the nearest 1 percent are equal, make the adjustment to the coarser component.

7-1451 (9-86) Bureau of Reclamation	GRADATION ANALYSIS	Designation USBR 5325-__ Designation USBR 5330-__ Designation USBR 5335-89

SAMPLE NO. Example	PROJECT	FEATURE
AREA	EXC. NO.	DEPTH

GRADATION OF GRAVEL SIZES

TESTED AND COMPUTED BY	DATE	% MOISTURE CONTENT OF + NO. 4	WET MASS OF TOTAL SPECIMEN
CHECKED BY	DATE	% MOISTURE CONTENT OF - NO. 4	TOTAL DRY MASS OF SPECIMEN

SIEVE SIZE		3" (75 mm)	1-1/2" (37.5 mm)	3/4" (19.0 mm)	3/8" (9.5 mm)	NO. 4 (4.75 mm)	PAN
MASS OF CONTAINER AND RETAINED MATERIAL							
MASS OF CONTAINER							
WET MASS RETAINED							
DRY MASS RETAINED							
DRY MASS PASSING		(example from U.S.B.R. 5325)					☐ lbm ☐ kg ☐ g
% OF TOTAL PASSING		100.0	95.6	81.7	73.8	63.2	

GRADATION OF SAND SIZES

DRY MASS OF SPECIMEN 59.1 g	FACTOR = % TOTAL PASSING NO. 4 / DRY MASS OF SPECIMEN = 63.2 / 59.1 = 1.069
DISH NO. 18	DRY MASS OF SPECIMEN (SIEVED) 39.2
SIEVING TIME 15 min.	DATE

SIEVE NO.	MASS RETAINED (g)	MASS PASSING (g)	FACTOR X MASS PASSING = % OF TOTAL PASSING	% OF TOTAL PASSING	PARTICLE DIAMETER	REMARKS
8	3.4	55.7		59.5	2.36 mm	125 ml 4% Sod. Hexametaphosphate
16	8.3	50.8		54.3	1.18 mm	dispersing agent used.
30	14.2	44.9		48.0	600 µm	
50	22.1	37.0		39.6	300 µm	
100	30.8	28.3		30.3	150 µm	
200	39.0	20.1		21.5	75 µm	
PAN	0.1					
TOTAL	39.1					

TESTED AND COMPUTED BY	DATE	CHECKED BY	DATE

HYDROMETER ANALYSIS

HYDROMETER NO.	DISPERSING AGENT
STARTING TIME	DATE / AMOUNT mL

TIME	TEMP °C	HYD READ	HYD CORR	CORR READ	FACTOR X CORRECT READ = % OF TOTAL PASSING	% OF TOTAL PASSING	PARTICLE DIAMETER	REMARKS
1 min							37 µm	
4 min							19 µm	
19 min							9 µm	
60 min							5 µm	AUXILIARY TESTS: USBR 5205-8 9 USBR 5300-__
7 h 15 min*							2 µm	
25 h 45 min*							1 µm	

TESTED AND COMPUTED BY	DATE	CHECKED BY	DATE

*Not required for standard test.

GPO 853 - 659

Figure 4. - Gradation analysis — example.

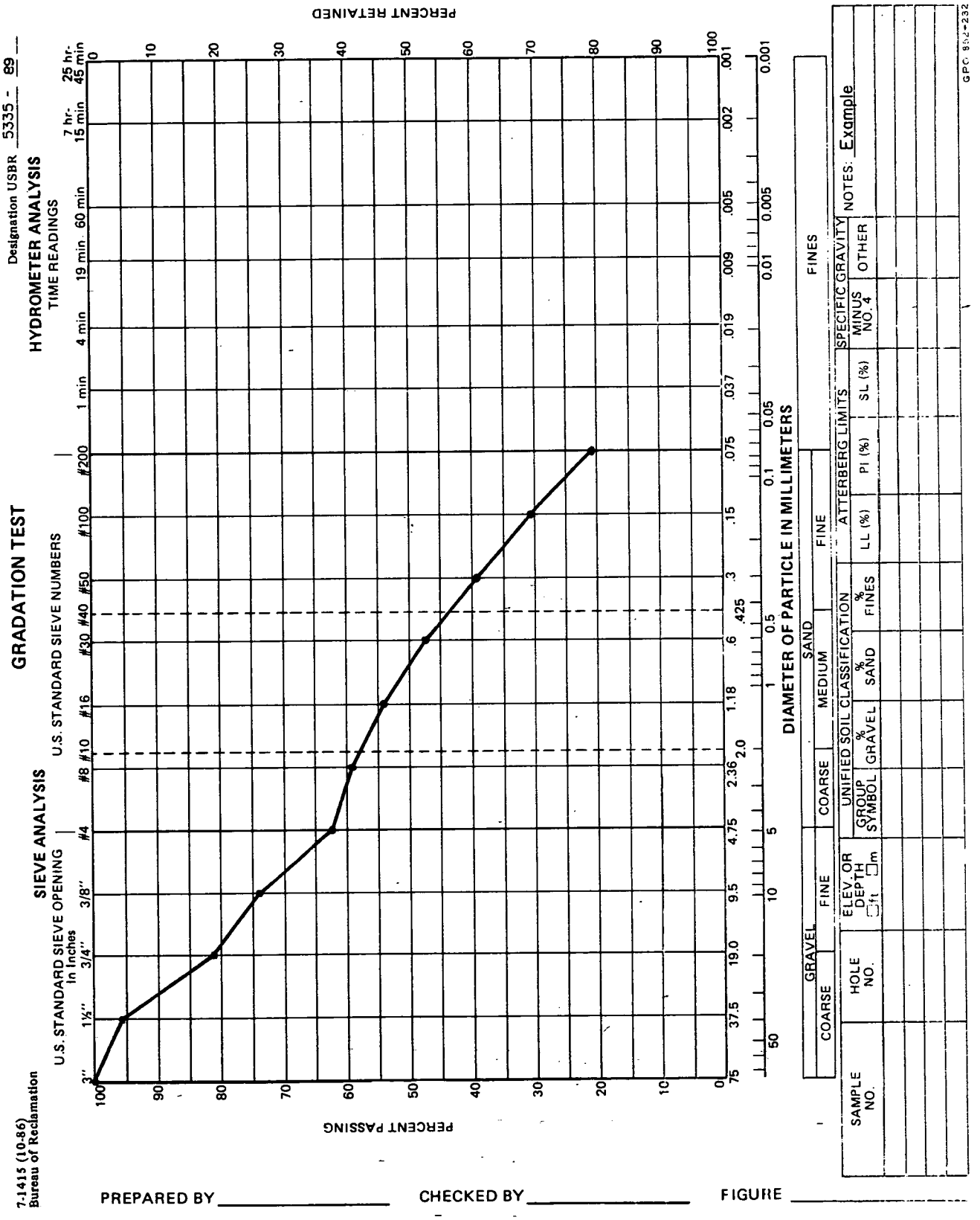

Figure 5. – Gradation test — gradation analysis data plot example.

UNITED STATES DEPARTMENT OF THE INTERIOR
BUREAU OF RECLAMATION

USBR 5345-89

PROCEDURE FOR

PERFORMING GRADATION ANALYSIS OF SOILS BY THE BOTTOM WITHDRAWAL TEST METHOD

INTRODUCTION

This procedure is under the jurisdiction of the Geotechnical Services Branch, code D-3760, Research and Laboratory Services Division, Denver Office, Denver, Colorado. The procedure is issued under the fixed designation USBR 5345. The number immediately following the designation indicates the year of acceptance or the year of last revision.

1. Scope

1.1 This designation outlines the procedure for performing gradation analysis of sediment samples or prepared soil samples by the bottom withdrawal test method.

1.2 The procedure is used to determine the gradation of soil in soil-water sediment sample having a minimum volume of 400 mL and a maximum particle size of 1.0 mm.

2. Applicable Documents

2.1 *USBR Procedures*:

USBR 1012 Calibrating Balances or Scales
USBR 1020 Calibrating Ovens
USBR 3900 Standard Definitions of Terms and Symbols Relating to Soil Mechanics
USBR 5205 Preparing Soil Samples by Splitting or Quartering
USBR 5330 Performing Gradation Analysis of Fines and Sand Size Fraction of Soils, Including Hydrometer Analysis
USBR 5405 Determining Dispersibility of Clayey Soils by the Double Hydrometer Test Method

2.2 *ASTM Standard*:

E 1 ASTM Thermometers

3. Summary of Method

3.1 The gradation of fine soil particles in a soil-water sediment sample is determined using a bottom withdrawal tube. After the sediment sample is uniformly dispersed in the bottom withdrawal tube, the tube is fastened in an upright position. At predetermined time intervals, a soil-water specimen of known volume is withdrawn from the bottom of the tube using the quick-acting outlet. The mass of the sediment in each collected specimen is determined after the water has evaporated. Then, the gradation of the sediment is determined using an Odén curve constructed using the data collected during the test.

4. Significance and Use

4.1 The test was originally developed to study the behavior of streambed sediments, and is used to determine the gradation of fine soils in low concentration soil-water sediment samples. Soil particles are assumed to behave as spheres settling at terminal velocity according to Stokes Law [1].[1]

5. Terminology

5.1 Definitions are in accordance with USBR 3900.

5.2 A term not included in USBR 3900 specific to this designation is:

5.2.1 *Odén Curve.*–Graphical representation of collected test data used to determine the gradation of the soil particles in the soil-water sediment sample.

6. Apparatus:

6.1 *General Apparatus*:

6.1.1 *Drying Oven.*–An oven, thermostatically controlled, preferably of the forced-draft type and capable of maintaining a uniform temperature of 230±9 °F (110±5 °C) throughout the drying chamber.

6.1.2 *Analytical Balance.*–An analytical balance having a capacity of about 200 g and readable to 0.0001 g. The accuracy of the balance must be sufficient to determine the mass to the nearest 0.1 percent.

6.1.3 *Graduates.*–100 mL capacity, readable to 1 mL; and 250 mL capacity, readable to 2 mL.

6.1.4 *Timing Device.*–Stopwatch or clock with sweep second hand.

6.1.5 *Thermometer.*–10 to 110 °C; 0.5 °C divisions, conforming to the requirements of ASTM E 1.

6.1.6 *Gooch Crucible.*–A perforated, porcelain evaporating dish for containing the filter paper and precipitate of the tested soil-water sediment sample during the filtering.

6.1.7 *Filtering Flask.*–250-mL filtering flask and stopper to fit gooch crucible with a side tube capable of withstanding a vacuum.

6.1.8 *Filter Paper.*–Glass fiber filter, grade 934AH or equivalent, sized to fit gooch crucible.

[1] Number in brackets refer to the reference.

6.1.9 *Gooch Crucible Storage Rack.*–Rack, designed to store a minimum of 10 crucibles for easy handling, ovendrying, etc.

6.2 *Equipment Unique to This Procedure*:

6.2.1 *Bottom Withdrawal Tube.*–A glass tube, equipped with a volumetric scale and a quick acting outlet at the lower end similar to that shown on figure 1.

6.2.2 *Stand.*–A structural stand fitted with clamps or other devices to hold bottom withdrawal tube vertical during test.

6.3 *Miscellaneous Equipment.*–Desicator, rubber stopper for bottom withdrawal tube, 400-mL capacity beaker, glass stirring rod, 200 mL graduate, bottle brush for cleaning bottom withdrawal tube, rubber tubing for quick acting outlet on bottom withdrawal tube, pinch clamps for rubber tubing quick acting outlet.

7. Reagents and Materials

7.1 Distilled water is to be used for washing the specimen into the bottom withdrawal tube and for filling the bottom withdrawal tube to the 1000-mm height mark.

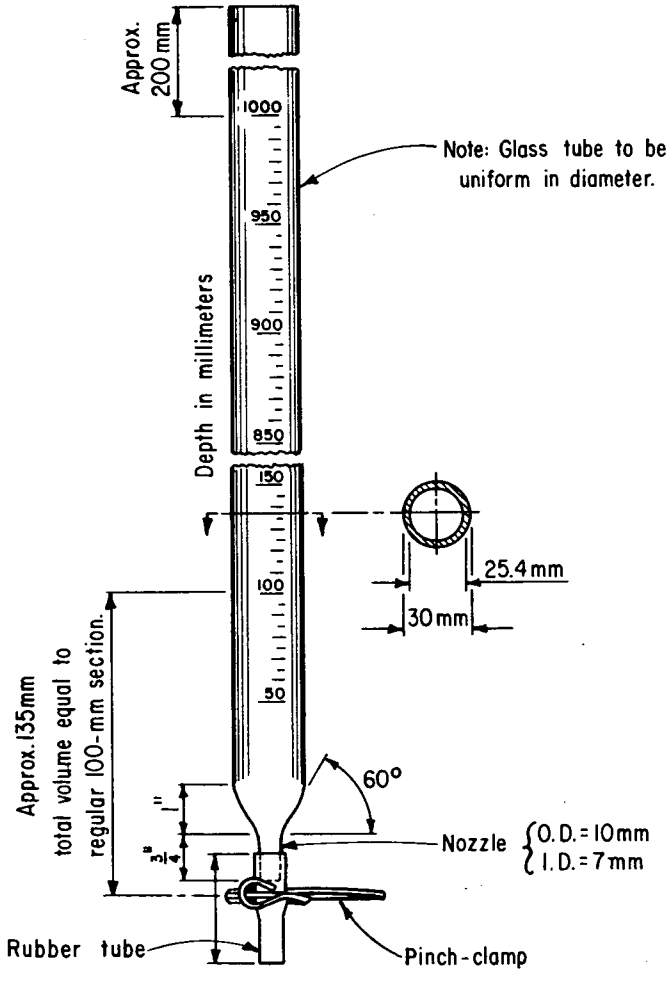

Figure 1. – Bottom withdrawal tube with quick acting outlet.

8. Precautions

8.1 *Safety Precautions.*–Exercise caution when handling glass bottom withdrawal tubes, especially when inverting to disperse the test specimen.

8.2 *Technical Precautions.*–If the total volume of the soil-water sediment sample is 1000 mL or more, the mass of dissolved solids per unit volume of undistilled water in the specimen is to be determined using the procedure of appendix X1.

9. Sampling, Test Specimens, and Test Units

9.1 A bottom withdrawal test may be required on a sample that has not been collected in the field as a soil-water sediment sample. For this case, a representative sample should be prepared in accordance with the procedures outlined in appendix X2.

10. Calibration and Standardization

10.1 Verify that equipment is currently calibrated in accordance with the applicable calibration procedure. If the calibration is not current, perform the calibration before using the equipment for this procedure.

USBR 1012 Calibrating Balances or Scales
USBR 1020 Calibrating Ovens

11. Conditioning

11.1 If the samples are to be stored for more than 2 weeks before testing, a dark room, subdued light, or refrigeration should be used to retard algae growth. A few drops of formaldehyde may be added to prevent algae growth.

12. Procedure

12.1 All data are to be recorded on the "Bottom Withdrawal Test Data Sheet" as shown on figure 2.

12.2 Obtain 10 gooch crucibles, place filter paper in the bottom of each crucible and ovendry the crucibles overnight at 230±9 °F (110±5 °C).

12.3 Transfer the gooch crucibles, with filter paper, to a desiccator and allow them to cool to room temperature. Determine the mass of each crucible to 0.0001 gram.

12.4 Record the number and mass of each crucible in columns (4) and (6) of the form.

12.5 Clean the bottom withdrawal tube with the bottle brush and assemble the rubber tubing and pinch clamp as shown on figure 1.

12.6 Check the watertight integrity of the rubber tubing and pinch clamp with a small amount of water before using the tube assembly for the test.

12.7 Attach the bottom withdrawal tube to the stand.

12.8 Transfer the soil-water sediment sample to the bottom withdrawal tube.

12.9 Wash the remainder of the sample into the tube using distilled water to bring the height of the soil-water suspension to the 1000-mm mark. If distilled water is not used for this step, a correction factor must be determined using appendix X1.

7-2365 (9-86) Bureau of Reclamation	BOTTOM WITHDRAWAL TEST DATA SHEET	Designation USBR 5345-89
SAMPLE NO. 1	PROJECT Example	FEATURE Example
TESTED BY DATE	COMPUTED BY DATE	CHECKED BY DATE

Date Received _____ Date Tested _____ Withdrawal Tube No. 14 Temperature 26 °C

Soil-Water Sample Volume 422.40 ml Soil-Water Sample Mass 422.85 g Sediment Mass 0.45 g

☐ Distilled water to bring suspension to 1000 mm height at beginning of test

☒ Undistilled water to bring suspension to 1000 mm height at beginning of test

Gross crucible mass 42.3844 g

Net crucible mass 42.2744 g

Mass of dissolved solids 0.0110 g

Dissolved solids correction factor = Mass/Specimen volume = $\frac{0.0110}{100} = 0.00011$ g/ml

Specimen volume 100 ml

Volume of water for a 100 mm withdrawal = 100 ml (a) Mass of dissolved solids present in 100 mm withdrawal = 0.0110 g

Clock Time	Elapsed Time min	Fall Ht. mm	Dish No.	MASS DETERMINATIONS					Depth Factor 1000/(3)	Sediment in Suspension 1000 mm Fall (9) x (10) g	Percent in Susp. %	Time to Settle 1000 mm (2) x (10) min
				Crucible + Sediment g	Crucible g	Precipitate (5) - (6) g	Sediment (7) - (a) g	Cumulative (read up) g				
(1)	(2)	(3)	(4)	(5)	(6)	(7)	(8)	(9)	(10)	(11)	(12)	(13)
8:00	0	1000	-	-	-	-	-	0.4519	1.000	0.4519	100	
8:08	8	903	20	61.6420	61.5667	0.0753	0.0643	0.3876	1.107	0.4291	95	8.9
8:24	24	800	10	65.8947	65.8100	0.0847	0.0737	0.3139	1.250	0.3924	86.8	30.0
8:40	40	696	3	60.5398	60.4627	0.0771	0.0661	0.2478	1.437	0.3561	78.8	57.5
8:54	54	600	38	58.3563	58.2931	0.0632	0.0522	0.1956	1.667	0.3261	72.2	90.0
9:09	69	495	12	62.3001	62.2362	0.0639	0.0529	0.1427	2.020	0.2883	63.8	139.4
9:22	82	400	50	70.7378	70.6869	0.0509	0.0399	0.1028	2.500	0.2570	56.9	205
9:36	96	300	25	60.9525	60.9037	0.0488	0.0378	0.0650	3.333	0.2166	47.9	320
9:50	110	200	24	64.0510	64.0087	0.0423	0.0313	0.0337	5.000	0.1685	37.3	550
10:04	124	99	43	64.9908	64.9570	0.0338	0.0228	0.0109	10.10	0.1101	24.4	1252
-	-	0	45	63.7403	63.7184	0.0219	0.0109	-	-	-	-	-

REMARKS: Data and plots from reference [1].

Figure 2. - Bottom withdrawal test data sheet — example.

12.10 Insert the rubber stopper into the top end of the tube.

12.11 In the 2 or 3 minutes required to transfer the sample into the tube, the large particles will have settled and collected at the bottom of the tube. Remove the tube from the stand and hold the tube nearly horizontal with the constricted bottom end slightly higher than the top end so that the entrapped air bubble moves to the constricted bottom end. Move the tube horizontally, using a backward and forward motion to wash the particles from the constricted bottom end. Continue this motion until the suspension appears uniform throughout the tube.

NOTE 1.–The uniformity of the suspension can be evaluated by observing the tube before a light source. Hold the tube slightly inclined, with the air bubble in the constricted bottom end of the tube. The coarser particles should be uniformly distributed along the length of the tube, settled, and collected on its lower side.

12.12 Move the tube to upright, bottom end down.

12.13 Invert the tube, allowing the entrapped air bubble to travel the full length of the tube before the next inversion. A complete inversion cycle; i.e., rotating the top to bottom and returning, should take about 10 seconds with the air bubble taking 5 seconds to travel the length of the tube.

12.14 Continue inversion cycles until the sediment sample is completely dispersed by observing uniform turbidity throughout the tube. Generally, this occurs within 2 to 5 minutes.

NOTE 2.–Once the tube inversion process has started, it should be continuous until the sample is uniformly dispersed. If the process is interrupted, return to subparagraph 12.11

12.15 To start the final tube inversion cycle, invert the tube such that the entrapped air bubble is located at the bottom, constricted end of the tube. Start the stopwatch as the tube is inverted to a vertical upright position and securely placed and attached to the stand.

12.16 Remove the rubber stopper from the top end of the tube.

12.17 Determine and record on the form col. (1), the clock time when the tube is in place in the stand. Using the predetermined elapsed time intervals, shown in column (2) of the form, complete the required withdrawal clock times and record clock time in column 1.

Note 3.–Time intervals are selected in such a manner as to accurately define the Odén curve. In general, for material containing particles as coarse as 1.0 mm, the withdrawal times typically used are at 10 seconds, 30 seconds, 1, 3, 7, 16, 40, 80, and 120 minutes. For samples containing particles of 1/16 mm or smaller the time intervals typically used are at 4, 15, 40, 54, 69, 82, 97, 110, and 124 min. Deviations from any certain set time will not do harm if the actual time of withdrawal is noted.

12.18 Approximately 10 seconds before the required withdrawal time, place the end of the rubber tubing into the open end of the 200-mL graduate.

12.19 Approximately 1 second before the required withdrawal time (clocktime), quickly open the pinch clamp to full width, collect the withdrawal specimen, and slowly close the pinch clamp as the last portion of the 100 mm length of sample is withdrawn.

NOTE 4.–For the initial withdrawal of the 100-mm length of sample, it is important that the withdrawn water clears the constricted tube end and rubber tubing of all coarse sediment particles. Subsequent openings and closings of the pinch clamp may be completed less rapidly for improved control as specimens are withdrawn.

12.20 Record the height of the water column remaining in the bottom withdrawal tube after removal of each withdrawal specimen in column 3 of the form.

12.21 Insert the appropriate gooch crucible into the rubber stopper of the vacuum filtering flask. Connect the vacuum source to the filtering flask.

12.22 Slowly transfer the withdrawn specimen into the gooch crucible; be extremely careful to transfer all the sediment without spillage. Wash the graduate with a stream of distilled water to assist in removing all the sediment from the graduate to the gooch crucible.

12.23 When the graduate is empty and the water level in the gooch crucible is relatively low, disconnect the vacuum and place the crucible in the storage rack.

12.24 Continue withdrawing 100-mm-length specimens of the soil-water sediment sample as described in subparagraphs 12.18 through 12.23 until the last specimen is withdrawn.

12.25 Determine and record the room temperature on the form.

12.26 Place the gooch crucibles and the storage rack in the drying oven for a minimum of 16 hours at 230±9 °F (110±5 °C).

12.27 Transfer the gooch crucibles and rack to a desiccator, cool to room temperature. Determine and record the mass of each crucible filter paper and collected sediment to 0.0001 gram in column 5 of the form.

12.28 Clean the gooch crucibles, graduates, and bottom withdrawal tubes; return the equipment to storage area.

13. Interpretation of Results

13.1 The "Bottom Withdrawal Test Data Sheet" is completed using the following guidelines.

13.1.1 *Column (1), Clock Time.*–Initial clock time is determined at start of test when the tube is placed upright in stand. Remaining clock times for each withdrawal specimens are computed from the initial clock time and the predetermined time intervals.

13.1.2 *Column (2), Elapsed Time.*–Preselected time intervals to assure full range coverage of particle diameters expected in the soil-water sediment sample.

13.1.3 *Column (3), Ht.*–Height (mm) along length of tube determined and recorded after withdrawal of each specimen.

13.1.4 *Column (4), Dish No.*–Crucible number preselected, recorded, and prelisted in sequence to be used during the test.

13.1.5 *Column (5), Gross.*–Mass of crucible, filter paper, and ovendry soil sediment after test, determined and recorded to 0.0001 gram.

13.1.6 *Column (6), Tare.*–Mass of crucible and filter paper before test, determined and recorded to 0.0001 gram.

13.1.7 *Column (7), Precipitate.*– Mass of dry sediment determined by subtracting column 6 from column 5.

13.1.8 *Column (8), Sediment.*–Net mass of soil sediment calculated using the values in column 7 minus the amount of dissolved solids determined in accordance with appendix X1. If distilled water is used for preparing the specimen and filling the bottom withdrawal tube, correction is not necessary for dissolved solids in the water.

13.1.9 *Column (9), Cumulative.*–Cumulative sediment mass is calculated by adding the values in column 8, beginning at the bottom of the column and proceeding upwards.

13.1.10 *Column (10), Depth Factor.*–Adjusts the actual observed height of the soil-water sediment column to account for continually decreasing particle settling lengths during the test.

13.1.11 *Column (11), Sediment in Suspension.*–Multiplying values in column 9 by column 10 adjusts the total mass of the settling particles withdrawn at actual settling height to the mass that would occur with 1000 mm total settling height.

13.1.12 *Column (12), Percent in Suspension.*– Determined by dividing the sediment in suspension recorded in column 11 at each withdrawal by the total mass of sediment.

13.1.13 *Column (13), Time to Settle 1000 mm.*– Equivalent time required for particles collected to settle 1000 mm according to Stokes' Law (determined by multiplying col. 2 by col. 10).

13.2 Figure 3 is the completed Odén curve used to determine the final gradation of the soil sediment sample. The Odén curve is constructed from the test data. The final gradation is determined graphically by using the data in table 1 in conjunction with the Odén curve constructed

Table 1. – Particle settling time table for use in preparing Odén curve.

Temp.	Particle Diameter, millimeters														
°C	1.00	0.50	0.25	0.125	0.0625	0.0442	0.0312	0.0221	0.0156	0.0110	0.0078	0.0055	0.0039	0.00276	0.00195
10	0.115	0.243	0.592	1.73	6.22	12.4	24.9	49.7	99.6	200	399	802	1594	3182	6380
11	.114	.240	.577	1.68	6.03	12.1	24.2	48.3	96.9	195	388	780	1551	3095	6206
12	.113	.237	.568	1.65	5.87	11.7	23.6	46.9	94.2	189	377	758	1507	3007	6031
13	.112	.233	.562	1.62	5.72	11.4	22.9	45.7	91.6	184	367	737	1466	2927	5868
14	.111	.232	.552	1.59	5.57	11.1	22.3	44.5	89.2	180	357	718	1428	2850	5715
15	.110	.228	.543	1.56	5.42	10.8	21.7	43.3	86.9	175	348	698	1391	2776	5566
16	.109	.227	.538	1.53	5.27	10.6	21.2	42.2	84.6	170	339	681	1354	2703	5421
17	.108	.225	.528	1.50	5.15	10.3	20.6	41.1	82.5	166	330	664	1320	2969	5285
18	.107	.222	.522	1.48	5.02	10.0	20.1	40.1	80.5	162	322	647	1288	2570	5254
19	.107	.220	.515	1.45	4.88	9.77	19.6	39.1	78.5	158	314	631	1256	2507	5026
20	.106	.218	.508	1.41	4.77	9.53	19.2	38.2	76.6	154	306	616	1225	2445	4904
20.5	.106	.217	.505	1.40	4.72	9.43	19.0	37.8	75.8	153	303	609	1212	2418	4849
21	.105	.217	.503	1.39	4.67	9.32	18.7	37.3	74.9	151	299	602	1198	2391	4794
21.5	.105	.215	.500	1.38	4.61	9.21	18.5	39.9	74.0	149	296	600	1179	2362	4735
22	.104	.213	.497	1.37	4.55	9.10	18.3	36.4	73.0	147	292	587	1168	2332	4675
22.5	.104	.213	.492	1.36	4.50	8.99	18.1	36.0	72.2	145	289	580	1155	2303	4621
23	.104	.212	.488	1.34	4.45	8.88	17.8	35.5	71.3	143	285	574	1141	2227	4566
23.5	.104	.210	.487	1.33	4.39	8.78	17.6	35.1	70.5	142	282	567	1128	2251	4514
24	.103	.210	.485	1.32	4.33	8.67	17.4	34.7	69.6	140	279	560	1114	2225	4461
24.5	.103	.210	.480	1.31	4.29	8.58	17.2	34.3	68.9	139	276	554	1102	2200	4411
25	.103	.208	.478	1.30	4.25	8.48	17.0	33.9	68.1	137	273	548	1090	2175	4361
25.5	.102	.208	.475	1.29	4.20	8.38	16.9	33.6	67.4	136	270	541	1078	2151	4312
26	.102	.207	.472	1.28	4.15	8.28	16.7	33.2	66.6	134	266	534	1065	2136	4263
27	.101	.205	.467	1.26	4.05	8.10	16.3	32.4	65.1	131	260	524	1042	2076	4169
28	.101	.203	.462	1.24	3.97	7.93	15.9	31.7	63.7	128	255	512	1019	2034	4079
29	.100	.202	.455	1.22	3.88	7.77	15.6	31.1	62.3	125	249	501	997	1990	3991
30	.0998	.200	.450	1.20	3.80	7.60	15.3	30.4	61.0	123	244	491	976	1948	3907
31	.0991	.198	.445	1.18	3.71	7.43	14.9	29.8	59.7	120	239	481	956	1908	3825
32	.0987	.197	.442	1.17	3.65	7.28	14.6	29.2	58.5	118	234	471	936	1869	3747

Time in minutes required for spheres having a specific gravity of 2.65 to fall 1000 mm in water at varying temperatures. Terminal fall velocity for particles 0.00195 to 0.0625 mm computed according to Stoke's Law; terminal fall velocity for coarser particles taken from curves prepared at the California Institute of Technology, from reference [1].

from the test data. Constructing the Odén curve is illustrated in three steps in appendix X3.

14. Report

14.1 The report is to consist of a completed and checked "Bottom Withdrawal Test Data Sheet" (fig. 2) with a completed Odén Curve, (fig. 3).

14.2 All calculations are to show a checkmark and all plotting must be checked.

15. Reference

[1] *A Study of Methods Used in Measurements and Analysis of Sediment Loads in Streams: Report No. 7, A Study of New Methods for Size Analysis of Suspended Sediment Samples*, St. Paul U.S. Army Corps of Engineers District Suboffice Hydraulic Laboratory, University of Iowa, Iowa City, Iowa, June 1943.

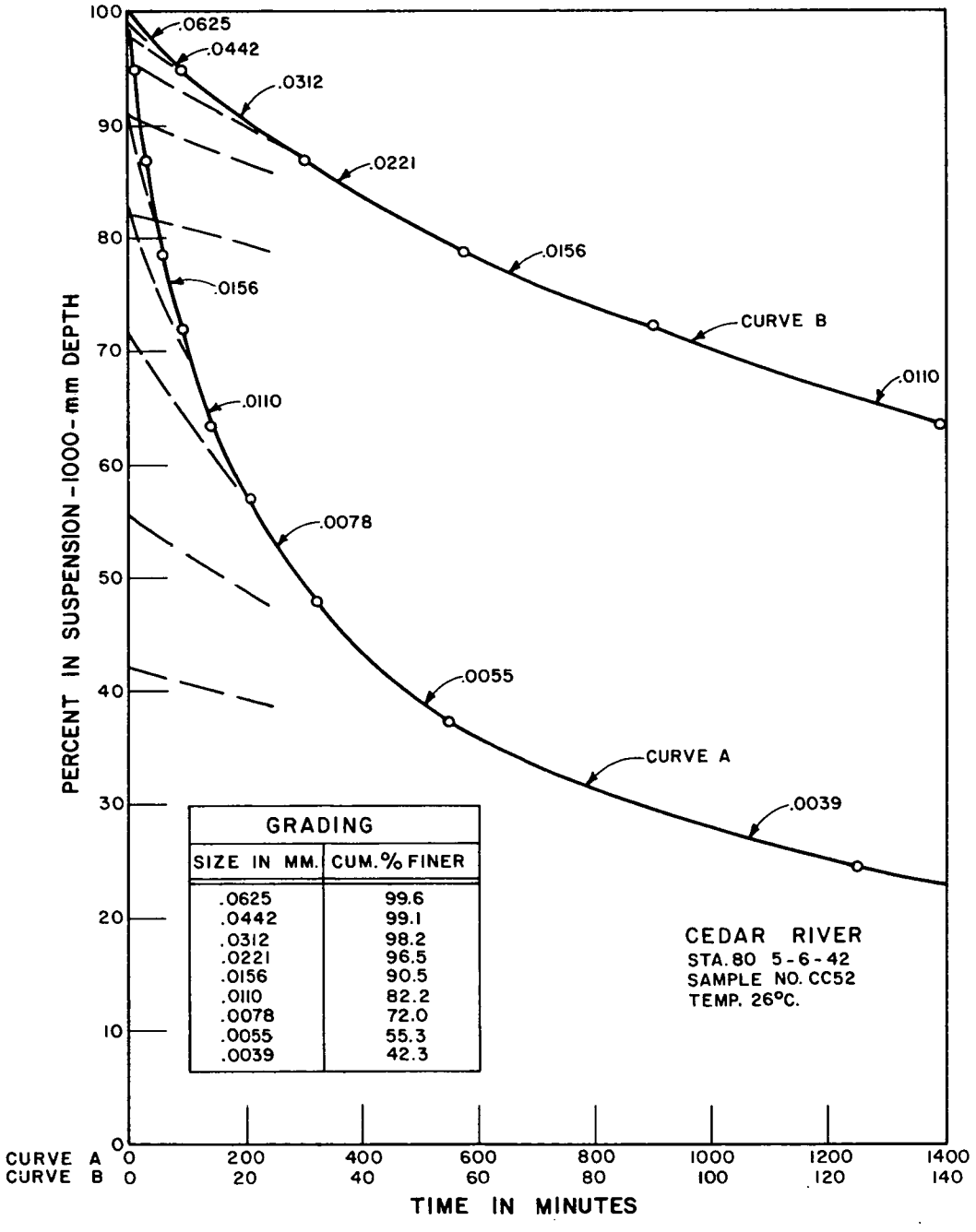

Figure 3. – Completed Odén curve.

APPENDIX

X1. DISSOLVED SOLIDS DETERMINATION FOR UNDISTILLED WATER

X1.1 Scope

X1.1.1 This appendix outlines the procedure for determining dissolved solids that may exist in undistilled water. The dissolved solids correction factor is used to reduce the precipitate mass determination to account for the mass of dissolved solids in undistilled water.

X1.2 Procedure

X1.2.1 All data are to be recorded on the "Bottom Withdrawal Test Data Sheet" as shown on figure 2.

X1.2.2 Prepare a gooch crucible with filter paper as outlined in subparagraphs 12.2 and 12.3 of this procedure.

X1.2.3 Record to the nearest 0.0001 g the mass of the crucible with filter paper in the location provided on the data form for net crucible mass.

X1.2.4 Obtain 100 mL of undistilled water by carefully decanting the upper most portion of the water sample. The large water sample should not be stirred or agitated for a minimum of 24 hours prior to performing the decanting operation. Using a pipette or burette to decant the 100-mL water specimen will generally produce a water specimen that contains no soil sediment particles.

X1.2.5 Place the crucible in the filtering flask and carefully pour the 100 mL water specimen through the crucible into the flask.

X1.2.6 Ovendry the crucible for a minimum of 16 hours. Transfer to a desiccator and allow to cool to room temperature.

X1.2.7 Determine the mass of the crucible, filter paper, and collected dissolved solids and record to the nearest 0.0001 g in the location provided on the data form for gross crucible mass.

X1.2.8 Subtract the net crucible mass from the gross crucible mass to determine the mass of dissolved solids and record to the nearest 0.0001 g.

X1.2.9 Calculate the dissolved solids correction factor by dividing the mass of dissolved solids by the volume of the water specimen. This correction factor is the mass of dissolved solids per unit volume of undistilled water in g/mL.

X1.2.10 Record the dissolved solids correction factor as shown on figure 2.

X1.2.11 Determine the volume of water in mL for the standard 100-mm withdrawal from the bottom withdrawal tube by filling the tube to the 100-mm mark and using a graduated cylinder to collect the water required to fill the tube to the 100-mm mark.

X1.2.12 Record the volume of water collected in subparagraph X1.2.11 as the *Volume of water for 100-mm withdrawal* to the nearest 1.0 mL as shown on figure 2.

X1.2.13 Calculate the mass of dissolved solids present in a 100-mm withdrawal by multiplying the value obtained in subparagraph X1.2.12 by the dissolved solids correction factor determined in subparagraph X1.2.9.

X1.2.14 Record the value obtained in subparagraph X1.2.13 as the *Mass of dissolved solids present in a 100-mm withdrawal* as shown on figure 2.

X2. PROCEDURE FOR PREPARING BOTTOM WITHDRAWAL TEST SPECIMEN FROM REPRESENTATIVE SOIL SAMPLE

X2.1 Scope

X2.1.1 This appendix outlines the procedure for preparing bottom withdrawal test specimens from a representative soil sample.

X2.1.2 This procedure should be used when it is required to determine the gradation of a fine-grained soil sample that has not been collected as a soil-water sediment sample.

X2.2 Procedure

X2.2.1 Obtain approximately 0.5 gram of minus No. 16 ovendry soil in accordance with USBR 5205.

X2.2.2 Place the soil specimen in a 300-mL porcelain evaporating dish and add 125 mL of dispersing agent as specified in USBR 5330.

X2.2.3 Allow the soil specimen to soak for a minimum of 16 hours.

X2.2.4 Transfer the specimen to the vacuum filtering flask as specified in USBR 5405.

X2.2.5 Connect the filtering flask to a vacuum source and evacuate entrapped air for 10 minutes using the procedure outlined in USBR 5405.

X2.2.6 Transfer the de-aired soil specimen to the bottom withdrawal tube and continue the test starting with paragraph 12 of this procedure.

X3. INSTRUCTIONS FOR CONSTRUCTING AN ODÉN CURVE

X3.1 Scope

X3.1.1 This appendix outlines the procedure for constructing an Odén curve.

X3.2 Procedure

X3.2.1 On rectangular coordinate paper, plot "Percent in Suspension" as ordinate (y-axis) with scale from 0 to 100; and plot "Time and Minutes" as abscissa (x-axis). The time axis should have two different scales; one scale full range 0 to 140 minutes and the other scale full range 0 to 1,400 minutes. Other scales may be used.

X3.2.2 Plot the values of columns 12 and 13 (from fig. 2) as the ordinate and abscissa values, respectively. Plot the values to each of the two scales. Construct two smooth curves by connecting the points using a French curve. Figure X3.1 shows completed curves.

X3.2.3 Using the time and temperature values (from table 1) mark the points and corresponding particle sizes on the two curves as plotted on figure X3.1. Figure X3.2 shows completed curves.

X3.2.4 Construct lines tangent to the curves at the points plotted from table 1 values. Each tangent line should be extended to intersect the "Percent in Suspension" ordinate axis. It is helpful to use two right angle triangles in constructing the tangent lines to visually determine the tangency and perpendicularity of the lines intersecting the curve. The tangent lines are shown on figure X3.3.

X3.2.5 The completed Odén curve—with a table showing the grading—is shown on figure 3 of the procedure.

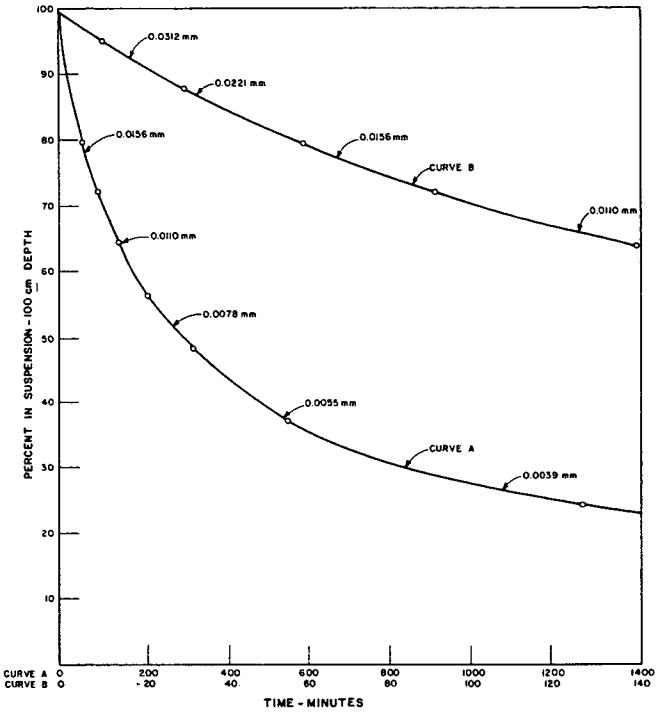

Figure X3.2 - Odén curve construction — Continued.

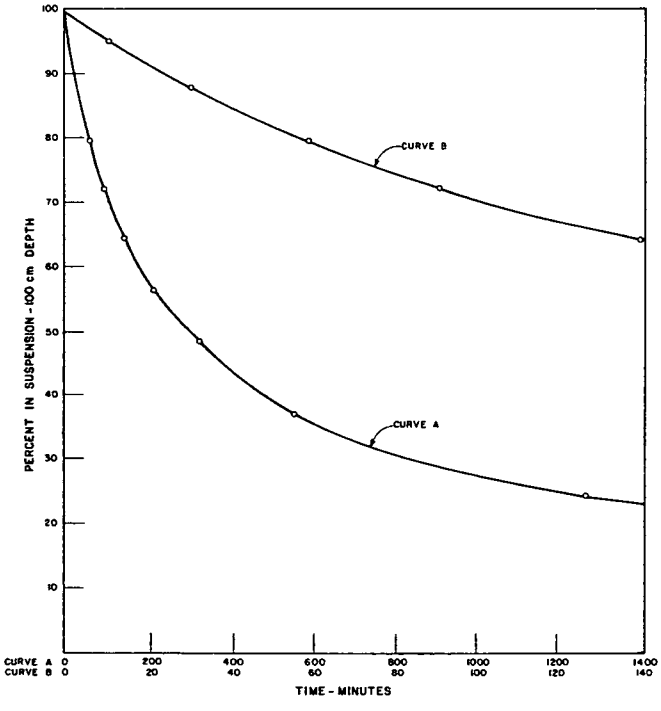

Figure X3.1 - Odén curve construction.

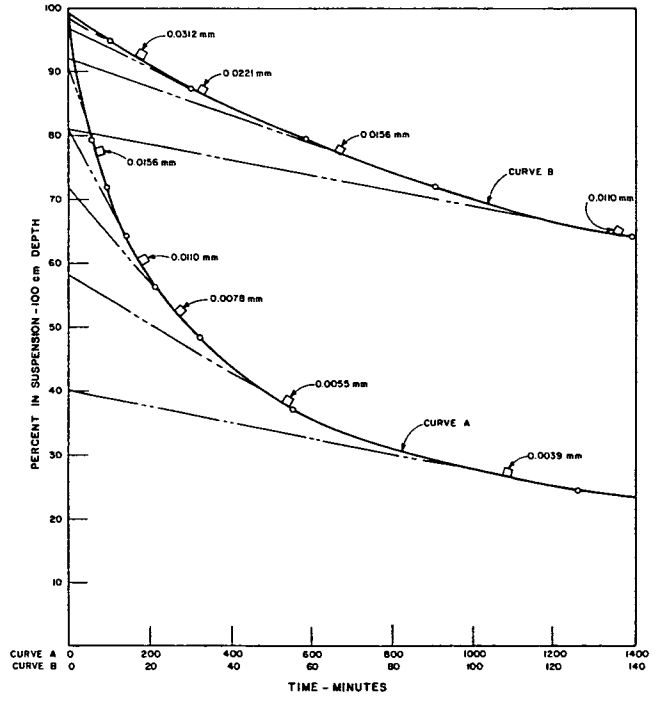

Figure X3.3 - Odén curve construction — Continued.

UNITED STATES DEPARTMENT OF THE INTERIOR
BUREAU OF RECLAMATION

USBR 5350-89

PROCEDURE FOR

DETERMINING THE LIQUID LIMIT OF SOILS BY THE ONE-POINT METHOD

INTRODUCTION

This procedure is under the jurisdiction of the Geotechnical Services Branch, code D-3760, Research and Laboratory Services Division, Denver Office, Denver, Colorado. The procedure is issued under the fixed designation USBR 5350. The number immediately following the designation indicates the year of acceptance or the year of last revision.

1. Scope

1.1 This designation outlines the procedure for determining the liquid limit of soils by the one-point method.

1.2 The one-point liquid limit procedure is frequently used for routine classification purposes. When greater precision is required, as when used for the acceptance of a material or for correlation with other test data, the multipoint procedure should be used (USBR 5355).

1.3 The correlations on which the calculations of the one-point procedure are based may not be valid for certain soils, such as organic soils or soils from a marine environment. The liquid limit of these soils should therefore be determined by the multipoint procedure (USBR 5355).

1.4 The liquid limit of a soil is the moisture content at which a groove in a pat of soil will flow together a distance of 1/2 inch (13 mm) under the impact of 25 blows in a standard liquid limit device. This moisture content corresponds to the arbitrary limit between the liquid and plastic states of consistency of soil.

1.5 The liquid limit test is one of three tests known as Atterberg limit tests. The plastic limit and shrinkage limit procedures are outlined in USBR 5360 and 5365, respectively.

2. Auxiliary Tests

2.1 A test sample must be obtained in accordance with USBR 5205 prior to performing this procedure. As a part of performing this procedure, the moisture content must be determined in accordance with USBR 5300.

3. Applicable Documents

3.1 *USBR Procedures*:
USBR 1012 Calibrating Balances or Scales
USBR 1020 Calibrating Ovens
USBR 1025 Checking Sieves
USBR 3900 Standard Definitions of Terms and Symbols Relating to Soil Mechanics
USBR 5205 Preparing Soil Samples by Splitting or Quartering
USBR 5300 Determining Moisture Content of Soil and Rock by the Oven Method
USBR 5355 Determining the Liquid Limit of Soils by the Three-Point Method
USBR 5360 Determining the Plastic Limit and Plasticity Index of Soils
USBR 5365 Determining Shrinkage Limit and Shrinkage Ratio of Soils

3.2 *ASTM Standards*:
E 11 Specification for Wire-Cloth Sieves for Testing Purposes
D 4318 Standard Test Method for Liquid Limit, Plastic Limit, and Plasticity Index of Soils

4. Significance and Use

4.1 Four stages, or states, can be identified for describing the consistency of a soil: (1) the liquid state, (2) the plastic state, (3) the semisolid state, and (4) the solid state. These states of consistency are related to the moisture content. Although transition between each of the states is gradual, test conditions have been established to determine the moisture content at a definite point in the transition from one stage of consistency to another. These moisture contents are called the liquid limit (LL), plastic limit (PL), and shrinkage limit (SL).

4.2 The significance of the limits and their relationship to the stages of consistency can be explained best by a discussion of figure 1. As a very wet, fine-grained soil dries, it passes progressively through different stages of consistency. In a very wet condition, the mass acts like a viscous liquid and is referred to as the liquid state. As the soil dries, there is a reduction in volume of the mass which is nearly proportional to the loss of moisture. When the moisture content in soil reaches a value equivalent to the liquid limit, the mass enters the plastic state.

4.3 The liquid limit is defined as that moisture content—expressed as a percentage of the dry mass of soil—at which the soil first shows a small but definite shear strength. Conversely, with increasing moisture content, it is also that moisture content when the soil mass just begins to become fluid under the influence of a series of standard shocks applied by the standard liquid limit device.

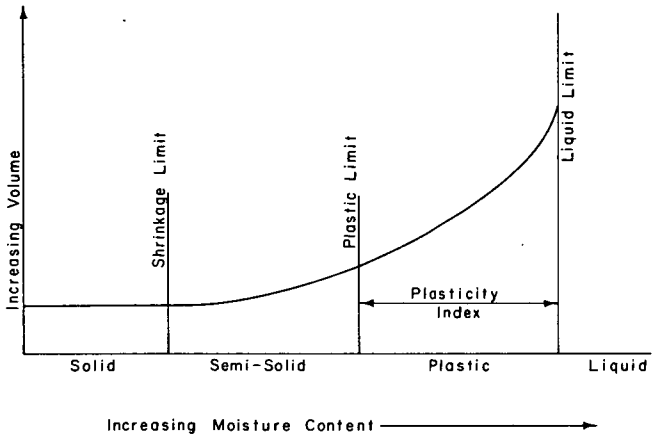

Figure 1. – Atterberg limits.

5. Terminology

5.1 Definitions are in accordance with USBR 3900. Terms of particular significance are:

5.1.1 *Atterberg Limits.*–The boundaries (determined by laboratory tests) of moisture content in a soil between the liquid state and plastic state (known as the liquid limit), between the plastic state and the semisolid state (known as the plastic limit), and between the semisolid state and the solid state (known as the shrinkage limit).

5.1.2 *Consistency.*–The relative ease with which a soil can be deformed (ASTM designation).

5.1.3 *Hygroscopic Moisture Content* (w_H, %).–The moisture content of an air-dried soil or rock (ASTM).

5.1.4 *Liquid Limit* (LL).–The moisture content corresponding to the arbitrary limit between the liquid and plastic states of consistency of a soil [ASTM definition (a)].

5.1.5 *Plasticity Index* (PI).–Numerical difference between the liquid limit and the plastic limit (ASTM).

6. Apparatus

6.1 *Balance or Scale.*–A typical balance or scale used for this designation must be readable to 0.01 g and have a capacity of about 500 g.

6.2 *Liquid Limit Device.*–A mechanical device consisting of a brass cup suspended from a carriage designed to control its drop onto a hard rubber base. Figure 2 shows the essential features of the device and the critical dimensions. The design of the device may vary provided the essential functions are preserved. The device may be operated either by a hand crank or by an electric motor.

6.3 *Grooving Tool.*–A flat grooving tool having the dimensions shown on figure 3. The grooving tool must be made of plastic or noncorroding metal (preferred). The design of the tool may vary as long as the essential dimensions are maintained. The tool may, but need not, incorporate the gauge for adjusting the height of drop of the liquid limit device.

6.4 *Gauge.*–A metal gauge block for adjusting the height of drop of the cup having the dimensions shown on figure 4. The design of the tool may vary provided the gauge will rest securely on the base without being susceptible to rocking, and the edge (which contacts the cup during adjustment) is straight — at least 10 mm (3/8 in wide) and without bevel or radius.

6.5 *Sample Container.*–A suitable container to hold the sample such as a 6-ounce aluminum can with a lid.

6.6 *Dish.*–Porcelain, evaporating, 300-mL capacity, about 4-1/2 inches diameter by 2-inches deep (115 by 50 mm).

6.7 *Dish.*–Weighing, aluminum, about 2-inches diameter by 1/2-inch high (50 by 12 mm).

6.8 *Spatula.*–A blade 4 inches (100 mm) long.

6.9 *Mortar and Pestle.*–Mortar, iron, or porcelain about 5 to 8 inches (125 to 200 mm) diameter with rubber-tipped pestle.

6.10 *Pan.*–Drying, small, metal, cast aluminum, about 8 by 8 by 2 inches (200 by 200 by 50 mm).

6.11 *Sieve.*–U.S.A. Standard series No. 40 (425 μm) conforming to the requirements of ASTM E 11.

7. Reagents and Materials

7.1 Distilled water is to be used for preparing the LL test specimen.

8. Precautions

8.1 *Technical Precautions*:

8.1.1 The test specimens should be prepared and processed as quickly as possible to minimize moisture loss.

8.1.2 Due to the effects of sampling, handling, processing, and testing on some materials, results of this test may not reflect in-place conditions or the properties of the material caused by processing and placement during construction. Of particular concern are materials such as soft and/or friable decomposed granite, sandstone, shale, limestone, claystone, etc., or soils affected by air and/or ovendrying. Such materials must be identified before processing, and the person requesting the test should verify whether standard procedures are to be followed, whether modifications are appropriate, or whether the material should be processed and tested at all. Cautionary statements must be made on test data forms and in reporting the test data.

9. Sampling, Test Specimens, and Test Units

9.1 *Sample Preparation*:

9.1.1 Prepare a test sample of about 500 g of minus No. 4 material in accordance with USBR 5205. This is the typical quantity for most soils which will provide enough material to perform the LL, PL, and SL tests. The test sample may need to be more, or may be less, but must be of sufficient size to provide the minimum mass of test specimen as described in subparagraph 9.2.1.

9.1.2 Air-dry the soil until any lumps will pulverize readily (see note 1).

NOTE 1.–This procedure also may be performed on material prepared at natural moisture content as described in ASTM D 4318.

DIMENSIONS

LETTER	A[Δ]	B[Δ]	C[Δ]	E[Δ]	F	G	H	J[Δ]	K[Δ]	L[Δ]	M[Δ]
MM	54 ±0.5	2 ±0.1	27 ±0.5	56 ±2.0	32	10	16	60 ±1.0	50 ±2.0	150 ±2.0	125 ±2.0
LETTER	N	P	R	T	U[Δ]	V	W	Z			
MM	24	28	24	45	47 ±1.0	3.8	13	6.5			

CAM ANGLE DEGREES	CAM RADIUS
0	0.742R
30	0.753R
60	0.764R
90	0.773R
120	0.784R
150	0.796R
180	0.818R
210	0.854R
240	0.901R
270	0.945R
300	0.974R
330	0.995R
360	1.000R

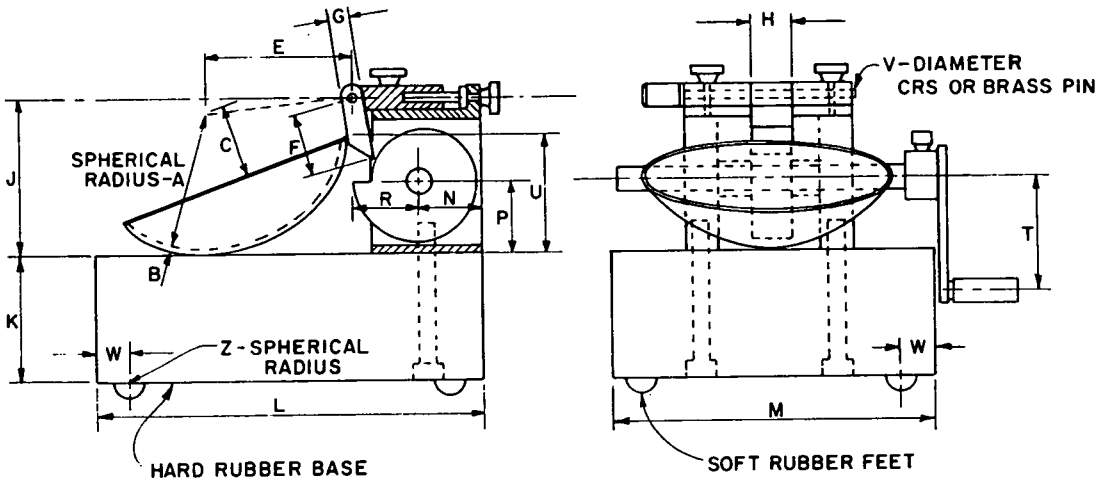

Figure 2. – Hand-operated liquid limit device [ASTM D 4318].

9.2 *Test Specimen Preparation*:

9.2.1 Obtain sufficient soil from the test sample to provide a test specimen of at least 100 g of minus No. 40 material if only the LL test is required; 120 g if both the LL and PL are required; and 150 g if the LL, PL, and SL are required. If necessary, because of minimum availability of material, the LL, PL, and SL can be performed using a minimum specimen size of 100 g of minus No. 40 material by performing the LL test and using what is left for the PL and SL tests. If the sample is to be reduced in size, split as described in USBR 5205.

9.2.2 Pulverize the soil and separate on a No. 40 sieve using the following procedure. (If practical or desired, procedure may start at subpar. 9.2.2.2 instead of 9.2.2.1.)

9.2.2.1 Separate the soil on a No. 40 sieve.

9.2.2.2 Place all of the material retained on the No. 40 (or all of the material) in a mortar and pulverize using a rubber-tipped pestle. A rubber-tipped pestle is used to prevent crushing sand grains. Care must be taken when pulverizing not to crush individual particles.

9.2.2.3 Repeat the steps in subparagraphs 9.2.2.1 and 9.2.2.2 until the soil has been completely disaggregated and the material retained on the No. 40 consists only of individual sand grains.

9.2.3 Discard the material retained on the No. 40 sieve.

9.2.4 Thoroughly mix the material passing the No. 40 sieve.

9.3 *Test Specimen for Plastic Limit*:

9.3.1 Obtain about 100 g of soil that passed the No. 40 sieve. If necessary, split the soil in accordance with USBR 5205.

9.3.2 Place the specimen in an evaporating dish.

9.3.3 Add 15 to 20 mL of distilled water to the soil specimen and thoroughly mix by alternately (and repeatedly) stirring, kneading, and chopping with a spatula.

9.3.4 Add further amounts of water in increments. Thoroughly mix each increment of water with the soil (described in subpar. 9.3.3) before adding another increment of water.

9.3.5 After sufficient water has been thoroughly mixed with the soil to produce a consistency that will require 30 to 35 drops of the cup to cause closure of the groove (subpar. 1.4) along a distance of 1/2 inch (13 mm), the wetted soil should be placed in a suitable sample container having a lid for 16 to 24 hours to ensure an even distribution of moisture throughout the specimen.

10. Calibration and Standardization

10.1 Verify that equipment is currently calibrated in accordance with the applicable calibration procedure. If the calibration is not current, perform the calibration before using the equipment for this procedure.

USBR 1012 Calibrating Balances or Scales
USBR 1020 Calibrating Ovens
USBR 1025 Checking Sieves

DIMENSIONS

LETTER	A▲	B▲	C▲	D▲	E▲	F▲
MM	2 ±0.1	11 ±0.2	40 ±0.5	8 ±0.1	50 ±0.5	2 ±0.1
LETTER	G	H	J	K	L▲	N
MM	10 MINIMUM	13	60	10 ±0.05	60° ±1°	20

▲- ESSENTIAL DIMENSIONS

□- BACK AT LEAST 15MM FROM TIP

NOTE: DIMENSION A SHOULD BE 1.9-2.0 AND DIMENSION D SHOULD BE 8.0-8.1 WHEN NEW TO ALLOW FOR ADEQUATE SERVICE LIFE.

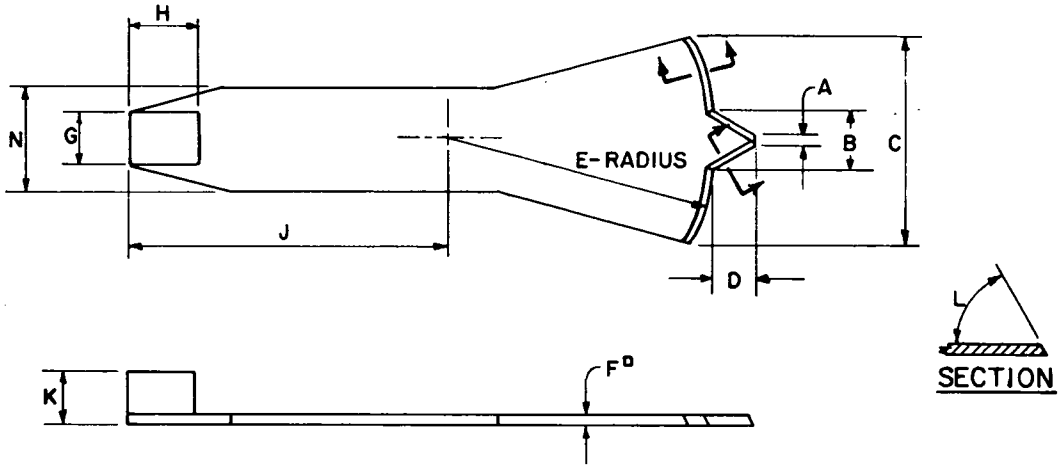

Figure 3. - Grooving tool (optional height-of-drop gauge attached) [ASTM D 4318].

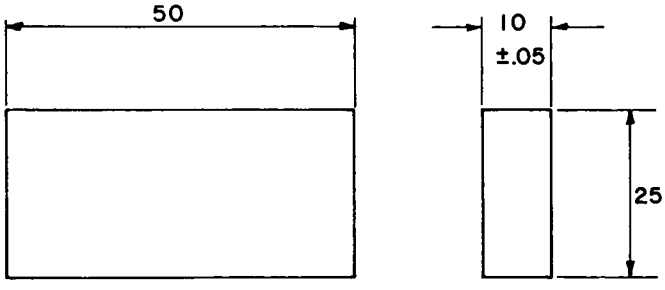

Figure 4. - Height of drop gauge [ASTM D 4318].

10.2 *Liquid Limit Device and Grooving Tool.*-Verify that the liquid limit device is in good working order and that it and the grooving tool have been inspected as described in appendix X1.

10.3 *Height of Drop.*-The height of drop of the cup must be checked at the beginning of each day the equipment is used. If necessary, adjust the height of drop of the cup so that the point on the cup that comes in contact with the base rises to a height of 10±0.2 mm.

NOTE 2.-A convenient procedure for adjusting the height of drop is as follows: place a piece of masking tape across the outside bottom of the cup parallel with the axis of the cup hanger pivot. The edge of the tape away from the cup hanger should bisect the spot on the cup that contacts the base. For new cups, placing a piece of carbon paper on the base and allowing the cup to drop several times will mark the contact spot. Attach the cup to the device and turn the crank until the cup is raised to its maximum height. Slide the height gauge under the cup from the front, and observe whether the gauge contacts the cup or the tape (see fig. 5). If the tape and cup are both contacted, the height of drop is approximately correct. If not, adjust the cup until simultaneous contact is made. Check adjustment by turning the crank at 2 revolutions per second while holding the gauge in position against the tape and cup. If a ringing or clicking sound is heard without the cup rising from the gauge, the adjustment is correct. If ringing is not heard or if the cup rises from the gauge, readjust the height of drop. If the cup rocks on the gauge during this checking operation, the cam follower pivot is excessively worn and the worn parts should be replaced. Always remove tape after completion of adjustment operation.

11. Conditioning

11.1 Test specimens should be prepared and processed as quickly as possible to minimize unrecorded moisture

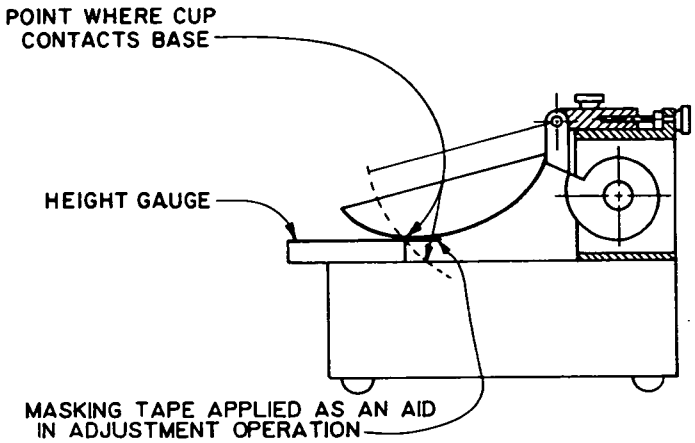

Figure 5. – Calibration for height of drop [ASTM D 4318].

loss which would result in an erroneous moisture content determination for the test specimen.

11.2 Prepared test specimens should be allowed to set 16 to 24 hours in a sample container to ensure even moisture distribution throughout the soil.

12. Procedure

12.1 All data are to be recorded on the "Soil Consistency Test (One-Point Liquid Limit Method)" form as shown on figure 6.

12.2 Place the test specimen, as prepared in accordance with paragraph 9, in an evaporating dish and thoroughly remix the soil.

12.3 Place a portion of the specimen in the cup above the spot where the cup rests on the base. Squeeze the soil specimen down and spread it into the position shown on figure 7(a) with as few strokes of the spatula as possible. Take care to prevent entrapping air bubbles within the mass.

12.4 With the spatula, form the soil cake by leveling the soil in the cup and, at the same time, trim it to a depth of 10 mm at the point of maximum thickness.

12.5 Return the excess soil to the evaporating dish.

12.6 Form a groove in the soil pat by drawing the tool, beveled edge forward, through the soil on a line joining the highest point to the lowest point on the rim of the cup. When cutting the groove, hold the grooving tool against the surface of the cup and draw in an arc while maintaining the tool perpendicular to the surface of the cup throughout its movement. In soils where a groove cannot be made in one stroke without tearing the soil, cut the groove with several strokes of the grooving tool. Alternatively, cut the groove to slightly less than required dimensions with a spatula and use the grooving tool to bring the groove to final dimensions. Exercise extreme care to prevent sliding the soil pat relative to the surface of the cup.

12.7 Verify that crumbs of soil are not present on the base or the underside of the cup.

12.8 Lift and drop the cup by turning the crank (fig. 2), or by means of a motorized device (fig. 7), at the rate of 2 blows per second, until the two halves of the soil cake come in contact at the bottom of the groove along a distance of 1/2 inch (13 mm).

12.9 If the number of blows required to close the groove is greater than 30, remove the material from the cup and place it into the evaporating dish with the remaining portion of the specimen.

12.10 Add water to the specimen and mix thoroughly to bring the soil to a wetter condition.

12.11 Thoroughly wash and dry the cup and grooving tool in preparation for the next trial.

12.12 Obtain a portion of the specimen prepared in subparagraph 12.10 and repeat subparagraphs 12.3 through 12.11 until an acceptable test is performed. A test is acceptable when the number of blows required to close the groove is between 20 and 30, inclusive.

12.13 The test should always proceed from the drier to the wetter condition of the soil.

12.14 When an acceptable test is performed, record the number of blows required and remove the material from the cup and place it into the evaporating dish with the remaining portion of the specimen.

12.15 Thoroughly mix the specimen and repeat the test until the difference in the number of blows between two successive trials is two or less.

12.16 Record the number of blows required to close the groove in the soil cake of the second acceptable trial.

12.17 Remove a slice of soil the width of the spatula from the specimen. This slice is to be taken across (perpendicular to) the groove and should include the area where the groove flowed together.

12.18 Place the slice of soil in a suitable moisture container and determine the moisture content in accordance with USBR 5300. The masses are to be determined and recorded to 0.01 g and the moisture content is to be calculated and recorded to 0.01 percent.

NOTE 3.–Determine the mass of the ovendried moisture specimen as soon as it has cooled, but before hygroscopic moisture can be absorbed.

12.19 Calculate and record to the nearest 0.1 percent the liquid limit of the test specimen.

13. Calculations

13.1 Calculate the moisture content of the test specimen in accordance with USBR 5300 and record the result as w_n on the test form.

13.2 Calculate LL for each moisture content specimen.

$$LL = F_n\, w_n$$

7-1702 (11-85) Bureau of Reclamation

SOIL CONSISTENCY TEST (ONE-POINT LIQUID LIMIT METHOD)

Designation USBR 5350 - 89

SAMPLE NO.	FEATURE	PROJECT
1	Example	Example

Air dried ☒ Oven dried ☐ Natural ☐

Tested by _____ Date _____

Computed by _____ Date _____

Checked by _____ Date _____

		PLASTIC LIMIT		LIQUID LIMIT	
Trial No.		1	2	1	2
Dish No.		99	145	143	
No. of blows (N)		----	----	21/22	
Mass of dish + wet soil	(g)	12.10	12.24	19.60	
Mass of dish + dry soil	(g)	11.05	11.16	14.32	
Mass of dish	(g)	6.28	6.26	6.13	
Mass of water	(g)	1.05	1.08	5.28	
Mass of dry soil	(g)	4.77	4.90	8.19	
Moisture	%	22.0	22.0	W_n = 64.47	
Average Plastic Limit		22.0		F_n = 0.985	
				Liquid Limit 63.5	

SHRINKAGE LIMIT

1. Shrinkage Dish No.		84	
2. Mass of dish + wet soil	(g)	34.61	
3. Mass of dish + dry soil	(g)	24.98	
4. Mass of dish	(g)	11.56	
5. Mass of water (2 - 3)	(g)	9.63	
6. Mass of dry soil (W_o) (3 - 4)	(g)	13.42	
7. % Moisture (5/6 x 100)		71.8	
8. Vol. Shrinkage Dish (V)		14.90	
9. Vol. Dry Soil (V_o)		7.20	
10. $V - V_o$ = (8 - 9)		7.70	
11. $\frac{V - V_o}{W_o} \times 100 = \left(\frac{10}{6} \times 100\right)$		57.4	
12. Shrinkage Limit (7 - 11)		14.4	
13. Shrinkage Ratio (6/9)		1.86	

$$LL = W_n \left(\frac{N}{25}\right)^{0.120}$$

$$F_n = \left(\frac{N}{25}\right)^{0.120}$$

$$LL = (F_n)(W_n)$$

N	F_n
20	0.974
21	0.979
(22)	0.985
23	0.990
24	0.995
25	1.000
26	1.005
27	1.009
28	1.014
29	1.018
30	1.022

PI = LL - PL

PLASTICITY INDEX:

PI = 64 - 22 = 42

LIQUID LIMIT (LL) = 64

PLASTIC LIMIT (PL) = 22

PLASTICITY INDEX (PI) = 42

SHRINKAGE LIMIT (SL) = 14

Auxiliary tests: USBR 5205 - 89
USBR 5300 - 89
USBR 5350 - 89
USBR 5360 - 89
USBR 5365 - 89

Remarks: _____

GPO 849-227

Figure 6. - Soil consistency test (one-point liquid limit method) — example.

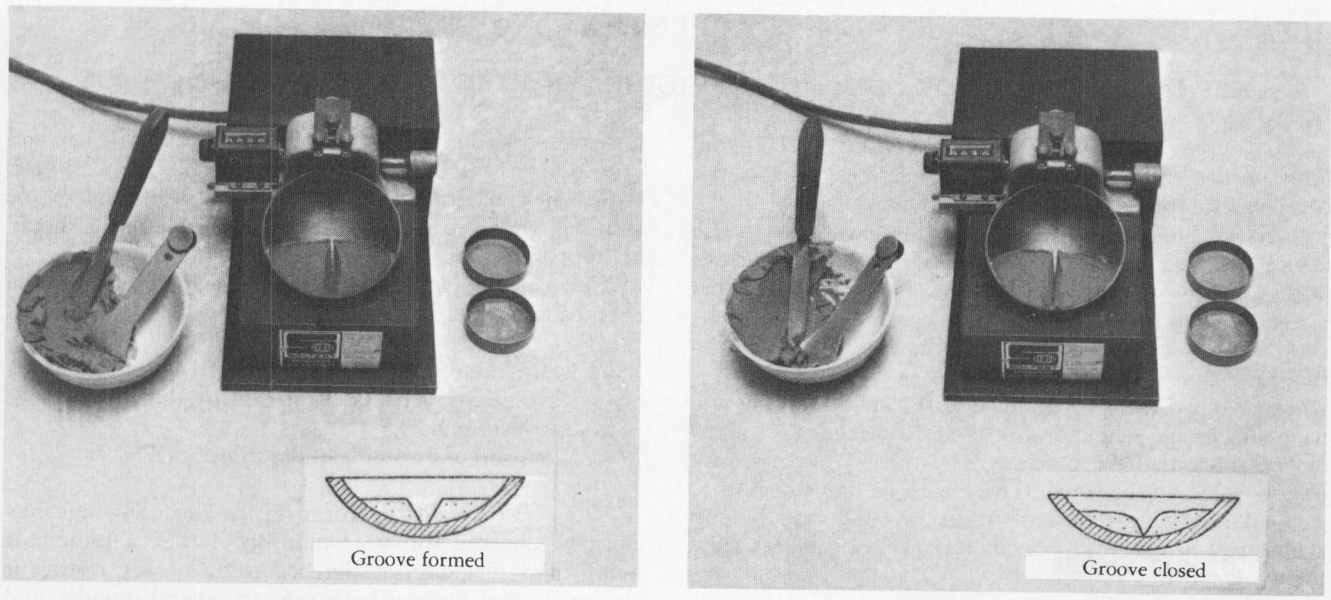

(a) Soil divided before test. Note groove formed in cup.

(b) Soil closed after test. Note groove closed in cup.

Figure 7. – Liquid limit test.

where:

LL = liquid limit of test specimen
F_n = factor, from table on test form (fig. 6) or
$F_n = \left(\frac{N}{25}\right)^{0.120}$
N = number of blows required to close the groove the required distance in the soil cake
w_n = moisture content of test specimen

14. Report

14.1 The report is to consist of a completed and checked "Soil Consistency Test (One-Point Liquid Limit Method)" form (fig. 6).

14.2 All calculations are to show a checkmark.

14.3 For reports, summary tables, etc., the LL value generally is reported to the nearest 1 percent. This also applies to the values for PL and SL.

APPENDIX

X1. INSPECTION AND CONDITION OF LIQUID LIMIT DEVICE AND GROOVING TOOL

X1.1 *Initial Acceptance.*–Upon receipt, the LL (liquid limit) device and the grooving tool must be inspected for conformance to the following requirements.

X1.1.1 *Essential Dimensions.*–Dimensions of the LL device, the grooving tool, and the height-of-drop gauge must conform to the dimensions as shown on figures 2, 3, and 4, respectively.

X1.1.2 *Base.*–The base must have a resilience such that an 8-mm (5/16-inch) diameter polished steel ball—when dropped from a height of 250 mm (9.84 in)—will have an average rebound of at least 80 percent (200 mm) but no more than 90 percent (225 mm). The tests must be conducted on the finished base with feet attached.

X1.1.3 *Feet.*–The base must be supported by soft rubber feet designed to provide isolation of the base from the work surface.

X1.1.4 *Cup.*–The cup must be brass and have a mass (including cup hanger) of 200±15 g.

X1.1.5 *Cam.*–The cam must raise the cup smoothly and continuously to its maximum height through a distance of at least 80 degrees of cam rotation. The preferred cam motion is a uniformly accelerated lift curve. The design of the cam and follower combination must be such that there is no upward or downward velocity of the cup when the cam follower leaves the cam. The cam and follower design is for uniformly accelerated (parabolic) motion after contact and ensures that the cup has no velocity at drop off. Other cam designs also provide this feature and may be used. However, if the cam-follower lift pattern is not known, zero velocity at drop off can be ensured by carefully filling or machining the cam and follower so that the cup height remains constant over the last 20 to 45 degrees of cam rotation.

X1.1.6 *Carriage.*–The cup carriage must be constructed in a way that allows convenient but secure adjustment of the height of drop of the cup to 10 mm (0.394 in). The cup hanger must be attached to the carriage by means of a pin which allows removal of the cup and cup hanger for cleaning and inspection.

X1.1.7 *Motor Drive* (optional).–The motor must turn the cam at 2±0.1 revolutions per second and must be isolated from the rest of the device by rubber mounts or in some way that prevents motor vibration from being transmitted to the rest of the apparatus. It must be equipped with an On-Off switch and means of conveniently positioning the cam for height of drop adjustments. Check for excessive vibration by removing or raising the cup and cam follower assembly off the base and placing a 250-mL beaker half full of water on the base. With the motor running, not more than a barely recognizable ripple should be noticeable.

X1.2 *Annual Inspection.*–The following items must be checked annually:

- Resilience of base described in X1.1.2
- Revolutions per second of cam by the motor drive as described in X1.1.7
- Vibration of assembly as described in X1.1.7

X1.3 *Periodic Inspection of Wear.*–The following items must be checked for wear monthly if the equipment is being used regularly, at the beginning of any testing if the equipment has not been used in several months, and at least on an annual basis.

X1.3.1 *Wear of Base.*–The spot on the base where the cup makes contact should be worn no greater than 10 mm (3/8 in) in diameter. If the wear spot is greater than this, the base can be machined to remove the worn spot provided the resurfacing does not make the base thinner than specified and the other dimensional relationships are maintained.

X1.3.2 *Wear of Cup.*–The cup must be replaced when the grooving tool has worn a depression in the cup 0.1 mm (0.004 in) deep or when the edge of the cup has been reduced to one-half its original thickness. Verify that the cup is firmly attached to the cup hanger.

X1.3.3 *Wear of Cup Hanger.*–Verify that the cup hanger pivot does not bind and is not worn to an extent that allows more than 3-mm (1/8 in) side-to-side movement of the lowest point on the rim.

X1.3.4 *Wear of Cam.*–The cam must not be worn to an extent that the cup drops before the cup hanger (cam follower) loses contact with the cam.

X1.3.5 *Grooving Tools.*–Inspect grooving tools for wear on a frequent and regular basis. The rapidity of wear depends on the material from which the tool is made and the types of soils being tested. Sandy soils cause rapid wear of grooving tools; therefore, when testing these materials, tools should be inspected more frequently than for other soils. Any tool with a tip width greater than 2.1 mm must not be used. The depth of the tip of the grooving tool must be 8.0±0.1 mm.

UNITED STATES DEPARTMENT OF THE INTERIOR
BUREAU OF RECLAMATION

USBR 5355-89

PROCEDURE FOR

DETERMINING THE LIQUID LIMIT OF SOILS BY THE THREE-POINT METHOD

INTRODUCTION

This procedure is under the jurisdiction of the Geotechnical Services Branch, code D-3760, Research and Laboratory Services Division, Denver Office, Denver, Colorado. The procedure is issued under the fixed designation USBR 5355. The number immediately following the designation indicates the year of acceptance or the year of last revision.

1. Scope

1.1 This designation outlines the procedure for determining the liquid limit of soils by the three-point method.

1.2 The three-point method of determining the liquid limit of soils is used as an alternate method to the one-point method (USBR 5350) and is used when greater precision is required. That is, it is used for the acceptance of a material or for correlation with other test data. The three-point method should be used when testing certain soils, such as organic soils or soils from a marine environment.

1.3 The liquid limit of a soil is the moisture content at which a groove in a pat of soil will flow together a distance of 1/2 inch (13 mm) under the impact of 25 blows in a standard liquid limit device. This moisture content corresponds to the arbitrary limit between the liquid and plastic states of consistency of soil.

1.4 The liquid limit test is one of three tests known as Atterberg limit tests. The plastic limit and shrinkage limit procedures are outlined in USBR 5360 and 5365, respectively.

2. Auxiliary Tests

2.1 A test sample must be obtained in accordance with USBR 5205 prior to performing this procedure. As a part of performing this procedure, the moisture content must be determined in accordance with USBR 5300.

3. Applicable Documents

3.1 *USBR Procedures*:

USBR 1012 Calibrating Balances or Scales
USBR 1025 Checking Sieves
USBR 3900 Standard Definitions of Terms and Symbols Relating to Soil Mechanics
USBR 5205 Preparing Soil Samples by Splitting or Quartering
USBR 5300 Determining Moisture Content of Soil and Rock by the Oven Method
USBR 5350 Determining the Liquid Limit of Soils by the One-Point Method
USBR 5360 Determining the Plastic Limit and Plasticity Index in Soils
USBR 5365 Determining Shrinkage Limit and Shrinkage Ratio of Soils

3.2 *ASTM Standards*:

E 11 Specification for Wire-Cloth Sieves for Testing Purposes
D 4318 Standard Test Method for Liquid Limit, Plastic Limit, and Plasticity Index of Soils

4. Significance and Use

4.1 Four stages, or states, can be identified for describing the consistency of a soil: (1) the liquid state, (2) the plastic state, (3) the semisolid state, and (4) the solid state. These states of consistency are related to the moisture content. Although the transition between each of the states is gradual, test conditions have been established to determine the moisture content at a definite point in the transition from one stage of consistency to another. These moisture contents are called liquid limit (LL), plastic limit (PL), and shrinkage limit (SL).

4.2 The significance of the limits and their relationship to the stages of consistency can be explained best by a discussion of figure 1. As a very wet, fine-grained soil dries, it passes progressively through different stages of consistency. In a very wet condition, the mass will act like a viscous liquid which is referred to as the liquid state. As the soil dries, there is a reduction in volume of the mass which is nearly proportional to the loss of moisture. When the moisture in soil reaches a value equivalent to the liquid limit, the mass enters the plastic state.

4.3 The liquid limit is defined as that moisture content—expressed as a percentage of the dry mass of soil—at which the soil first shows a small but definite shear strength. Conversely, with increasing moisture, it is also that moisture content when the soil mass just begins to become fluid under the influence of a series of standard shocks applied by the standard liquid limit device.

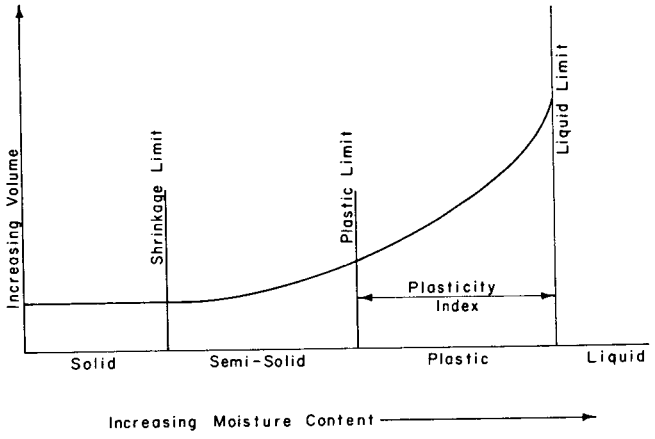

Figure 1. – Atterberg limits.

5. Terminology

5.1 Definitions are in accordance with USBR 3900. Terms of particular significance are:

5.1.1 *Atterberg Limits.*–The boundaries (determined by laboratory tests) of moisture content in a soil between the liquid state and plastic state (known as liquid limit), between the plastic state and the semisolid state (known as the plastic limit), and between the semisolid state and the solid state (known as the shrinkage limit).

5.1.2 *Consistency.*–The relative ease with which a soil can be deformed (ASTM definition).

5.1.3 *Hygroscopic Moisture Content* (w_H, %).–The moisture content of an air-dried soil or rock (ASTM).

5.1.4 *Liquid Limit* (LL).–The moisture content corresponding to the arbitrary limit between the liquid and plastic states of consistency of a soil [ASTM definition (a)].

5.1.5 *Plasticity Index* (PI).–Numerical difference between the liquid limit and the plastic limit.

6. Apparatus

6.1 *Balance or Scale.*–A typical balance or scale used for this designation must be readable to 0.01 g and have a capacity of about 500 g.

6.2 *Liquid Limit Device.*–A mechanical device consisting of a brass cup suspended from a carriage designed to control its drop onto a hard rubber base. Figure 2 shows the essential features of the device and the critical dimensions. The design of the device may vary provided that the essential functions are preserved. The device may be operated either by a handcrank or by an electric motor.

6.3 *Grooving Tool.*–A flat grooving tool having the dimensions shown on figure 3. The grooving tool must be made of plastic or noncorroding metal (preferred). The design of the tool may vary as long as the essential dimensions are maintained. The tool may, but need not,

DIMENSIONS

LETTER	A[Δ]	B[Δ]	C[Δ]	E[Δ]	F	G	H	J[Δ]	K[Δ]	L[Δ]	M[Δ]
MM	54 ±0.5	2 ±0.1	27 ±0.5	56 ±2.0	32	10	16	60 ±1.0	50 ±2.0	150 ±2.0	125 ±2.0

LETTER	N	P	R	T	U[Δ]	V	W	Z
MM	24	28	24	45	47 ±1.0	3.8	13	6.5

CAM ANGLE DEGREES	CAM RADIUS
0	0.742R
30	0.753R
60	0.764R
90	0.773R
120	0.784R
150	0.796R
180	0.818R
210	0.854R
240	0.901R
270	0.945R
300	0.974R
330	0.995R
360	1.000R

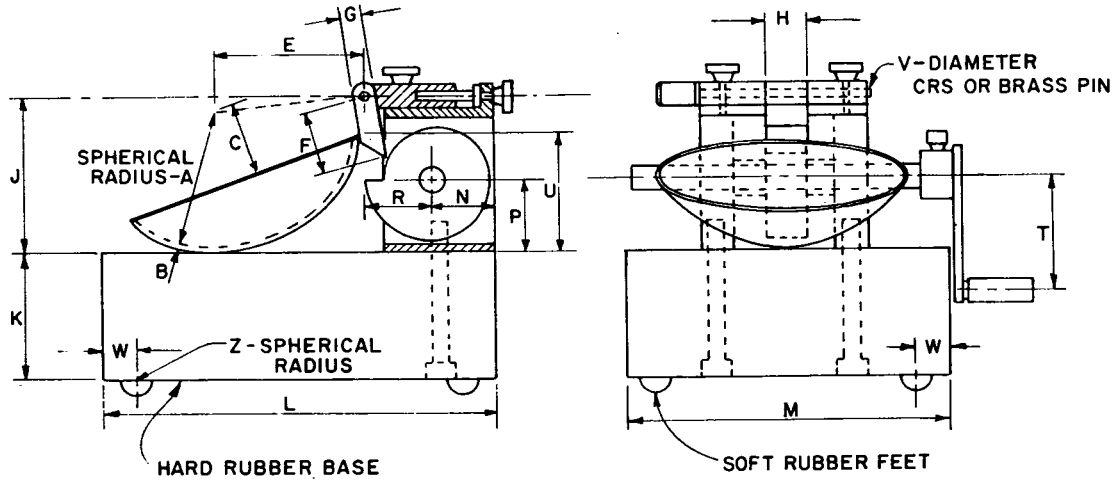

Figure 2. – Hand-operated liquid limit device [ASTM D 4318].

incorporate the gauge for adjusting the height of drop of the liquid limit device.

6.4 *Gauge.*–A metal gauge block for adjusting the height of drop of the cup having the dimensions shown on figure 4. The design of the tool may vary provided the gauge will rest securely on the base without being susceptible to rocking, and the edge (which contacts the cup during adjustments) is straight — at least 10 mm (3/8 in) wide, and without bevel or radius.

6.5 *Sample Container.*–A suitable container to hold the sample such as a 6-ounce aluminum can with a lid.

6.6 *Dish.*–Porcelain, evaporating, 300 mL capacity, about 4-1/2 inches diameter by 2-inches deep (115 by 50 mm).

6.7 *Dish.*–Weighing, aluminum, about 2-inches diameter by 1/2-inch deep (50- by 12-mm).

6.8 *Spatula.*–A blade 4-inches (100 mm) long.

6.9 *Mortar and Pestle.*–Mortar, iron, or porcelain about 5 to 8 inches (125 to 200 mm) diameter with rubber-tipped pestle.

6.10 *Pan.*–Drying, small, metal, cast aluminum about 8 by 8 by 2 inches (200 by 200 by 50 mm).

6.11 *Sieve.*–U.S.A. Standard series No. 40 (425 μm) conforming to the requirements of ASTM E 11.

7. Reagents and Materials

7.1 Distilled water is to be used for preparing the LL test specimen.

8. Precautions

8.1 *Technical Precautions*:

8.1.1 The test specimens should be prepared and processed as quickly as possible to minimize moisture loss.

8.1.2 Due to the effects of sampling, handling, processing, and testing on some materials, results of this test may not reflect in-place conditions or the properties of the material caused by processing and placement during construction. Of particular concern are materials such as soft and/or friable decomposed granite, sandstone, shale, limestone, claystone, etc., or soils affected by air and/or ovendrying. Such materials must be identified before processing and the person requesting the test should verify whether standard procedures are to be followed, whether modifications are appropriate, or whether the material should be processed and tested at all. Cautionary statements must be made on test data forms and in reporting the test data.

9. Sampling, Test Specimens, and Test Units

9.1 *Sample Preparation*:

9.1.1 Prepare a test sample of about 500 g of minus No. 4 material in accordance with USBR 5205. This is the typical quantity for most soils which will provide enough material to perform the LL, PL, and SL tests. The test sample may need to be more, or may be less, but must be of sufficient size to provide the minimum mass of test specimen as described in subparagraph 9.2.1.

9.1.2 Air-dry the soil until any lumps will pulverize readily (see note 1).

NOTE 1.–This procedure also may be performed on material prepared at natural moisture content as described in ASTM D 4318.

9.2 *Test Specimen Preparation*:

9.2.1 Obtain sufficient soil from the test sample to provide a test specimen of at least 100 g of minus No. 40 material if only the LL test is required; 120 g if both the LL and PL are required; and 150 g if the LL, PL, and SL are required. If necessary, because of minimum availability of material, the LL, PL, and SL can be performed using a minimum specimen size of 100 g of minus No. 40 material by performing the LL test and using what is left for the PL and SL tests. If the sample is to be reduced in size, split as described in USBR 5205.

9.2.2 Pulverize the soil and separate on a No. 40 sieve using the following procedure. (If practical or desired, procedure may start at subpar. 9.2.2.2 instead of 9.2.2.1.)

9.2.2.1 Separate the soil on a No. 40 sieve.

9.2.2.2 Place all of the material retained on the No. 40 (or all of the material) in a mortar and pulverize using a rubber-tipped pestle. A rubber-tipped pestle is used to prevent crushing sand grains. Care must be taken when pulverizing not to crush individual particles.

9.2.2.3 Repeat the steps in subparagraph 9.2.2.1 and 9.2.2.2 until the soil has been completely disaggregated and the material retained on the No. 40 consists only of individual sand grains.

9.2.3 Discard the material retained on the No. 40 sieve.

9.2.4 Thoroughly mix the material passing the No. 40 sieve.

9.3 *Test Specimen for Liquid Limit*:

9.3.1 Obtain about 100 g of soil that passed the No. 40 sieve. If necessary, split in accordance with USBR 5205.

9.3.2 Place the specimen in an evaporating dish.

9.3.3 Add 15 to 20 mL of distilled water to the soil specimen and thoroughly mix by alternately (and repeatedly) stirring, kneading, and chopping with a spatula.

9.3.4 Add further amounts of water in increments. Thoroughly mix each increment of water with the soil (described in subpar. 9.3.3) before adding another increment of water.

9.3.5 After sufficient water has been thoroughly mixed with the soil to produce a consistency that will require 30 to 35 drops of the cup to cause closure of the groove (subpar. 1.3) along a distance of 1/2 inch (13 mm), the wetted soil should be placed in a suitable sample container having a lid for 16 to 24 hours to ensure an even distribution of moisture throughout the specimen.

10. Calibration and Standardization

10.1 Verify that equipment is currently calibrated in accordance with the applicable calibration procedure. If the

DIMENSIONS

LETTER	A▲	B▲	C▲	D▲	E▲	F▲
MM	2 ±0.1	11 ±0.2	40 ±0.5	8 ±0.1	50 ±0.5	2 ±0.1
LETTER	G	H	J	K	L▲	N
MM	10 MINIMUM	13	60	10 ±0.05	60° ±1°	20

▲- ESSENTIAL DIMENSIONS

□- BACK AT LEAST 15MM FROM TIP

NOTE: DIMENSION A SHOULD BE 1.9-2.0 AND DIMENSION D SHOULD BE 8.0-8.1 WHEN NEW TO ALLOW FOR ADEQUATE SERVICE LIFE.

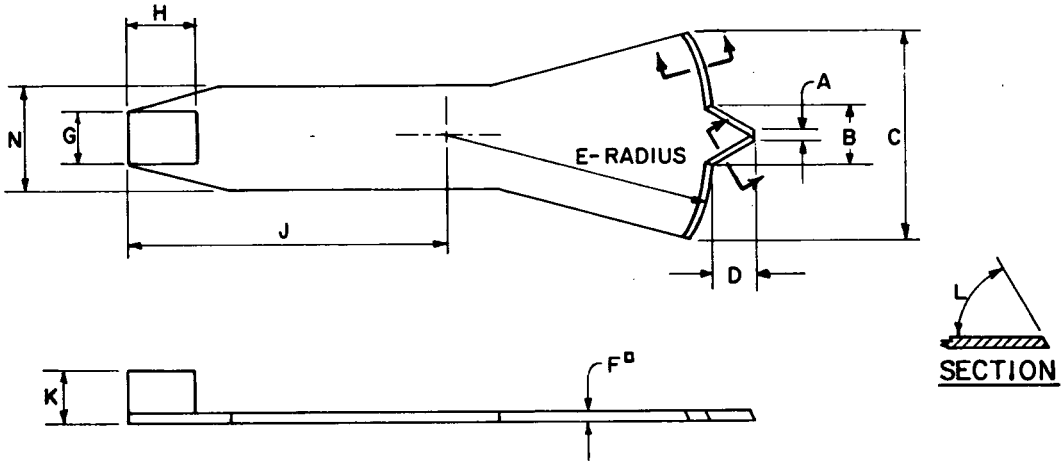

Figure 3. - Grooving tool (optional height-of-drop gauge attached) [ASTM D 4318].

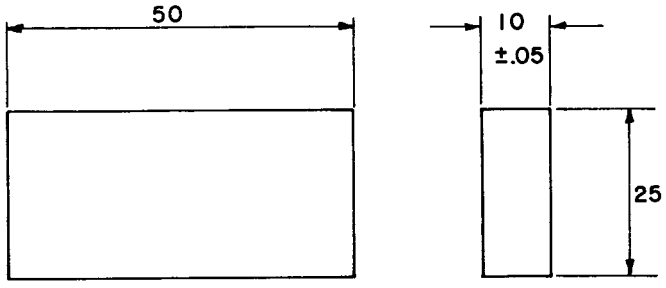

DIMENSIONS IN MILLIMETERS

Figure 4. - Height of drop gauge [ASTM D 4318].

calibration is not current, perform the calibration before using the equipment for this procedure.

USBR 1012 Calibrating Balances or Scales
USBR 1020 Calibrating Ovens
USBR 1025 Checking Sieves

10.2 *Liquid Limit Device and Grooving Tool.*-Verify that the liquid limit device is in good working order and that it and the grooving tool have been inspected as described in appendix X1.

10.3 *Height of Drop.*-The height of drop of the cup must be checked at the beginning of each day the equipment is used. If necessary, adjust the height of drop of the cup so that the point on the cup that comes in contact with the base rises to a height of 10±0.2 mm.

NOTE 2.-A convenient procedure for adjusting the height of drop is as follows: place a piece of masking tape across the outside bottom of the cup parallel with the axis of the cup hanger pivot. The edge of the tape away from the cup hanger should bisect the spot on the cup that contacts the base. For new cups, placing a piece of carbon paper on the base and allowing the cup to drop several times will mark the contact spot. Attach the cup to the device and turn the crank until the cup is raised to its maximum height. Slide the height gauge under the cup from the front, and observe whether the gauge contacts the cup or the tape (fig. 5). If the tape and cup are both contacted, the height of drop is approximately correct. If not, adjust the cup until simultaneous contact is made. Check adjustment by turning the crank at 2 revolutions per second while holding the gauge in position against the tape and cup. If a ringing or clicking sound is heard without the cup rising from the gauge, the adjustment is correct. If ringing is not heard or if the cup rises from the gauge, readjust the height of drop. If the cup rocks on the gauge during this checking operations, the cam follower pivot is excessively worn and the worn parts should be replaced. Always remove tape after completion of adjustment operation.

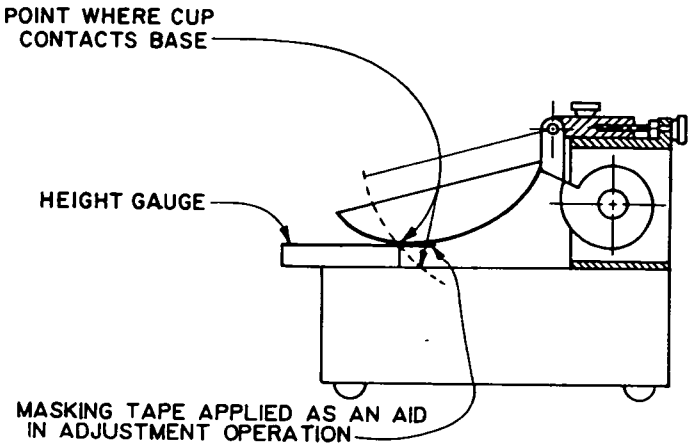

Figure 5. – Calibration for height of drop [ASTM D 4318].

11. Conditioning

11.1 Test specimens should be prepared and processed as quickly as possible to minimize unrecorded moisture loss which would result in an erroneous moisture content determination for the test specimen.

11.2 Prepared test specimens should be allowed to set 16 to 24 hours in a sample container to ensure even moisture distribution throughout the soil.

12. Procedure

12.1 All data are to be recorded on the "Soil Consistency Test (Three-Point Liquid Limit Method) form as shown on figure 6.

12.2 Place the test specimen, as prepared in accordance with paragraph 9, in an evaporating dish and thoroughly remix the soil.

12.3 Place a portion of the specimen in the cup above the spot where the cup rests on the base. Squeeze the soil specimen down and spread it into the position shown on figure 7a with a few strokes of the spatula as possible. Take care to prevent entrapping air bubbles within the mass.

12.4 With the spatula, form the soil cake by leveling the soil in the cup and at the same time trim it to a depth of 10 mm at the point of maximum thickness.

12.5 Return the excess soil to the evaporating dish.

12.6 Form a groove in the soil pat by drawing the tool, beveled edge forward, through the soil on a line joining the highest point to the lowest point on the rim of the cup. When cutting the groove, hold the grooving tool against the surface of the cup and draw in an arc while maintaining the tool perpendicular to the surface of the cup throughout its movement. In soils where a groove cannot be made in one stroke without tearing the soil, cut the groove with several strokes of the grooving tool. Alternatively, cut the groove to slightly less than required dimensions with a spatula and use the grooving tool to bring the groove to final dimensions. Exercise extreme care to prevent sliding the soil pat relative to the surface of the cup.

12.7 Verify that crumbs of soil are not present on the base or the underside of the cup.

12.8 Lift and drop the cup by turning the crank (fig. 2), or by means of a motorized device (fig. 7), at the rate of 2 blows per second, until the two halves of the soil cake come in contact at the bottom of the groove along a distance of 1/2 inch (13 mm).

12.9 If the number of blows required to close the groove is greater than 35, remove the material from the cup and place it into the evaporating dish with the remaining portion of the specimen.

12.10 Add water to the specimen and mix thoroughly to bring the soil to a wetter condition.

12.11 Thoroughly wash and dry the cup and grooving tool in preparation for the next trial.

12.12 Obtain a portion of the specimen prepared in subparagraph 12.10 and repeat subparagraphs 12.3 through 12.11 until an acceptable test is performed. A test is acceptable when the number of blows required to close the groove is between 15 and 35. (See note 4.)

12.13 The test should always proceed from the dryer to the wetter condition of the soil.

12.14 When an acceptable test is performed, record the number of blows required and remove a slice of soil the width of the spatula from the specimen. This slice is to be taken across (perpendicular to) the groove and should include the area where the groove flowed together.

12.15 Place the slice of soil in a suitable moisture container and determine the moisture content in accordance with USBR 5300. The masses are to be determined and recorded to the 0.01 g and the moisture content is to be calculated and recorded to 0.1 percent.

NOTE 3.–Determine the mass of the ovendried moisture specimen as soon as it has cooled, but before hygroscopic moisture can be absorbed.

12.16 Transfer the soil remaining in the cup to the evaporating dish.

12.17 Wash and dry the cup and grooving tool in preparation for the next trial.

12.18 Add water to the soil remaining in the evaporating dish to bring the specimen to a wetter condition, and repeat subparagraphs 12.3 through 12.11 a minimum of two times such that the number of blows required to close the groove for each test specimen is between 15 and 25.

NOTE 4.–The object of this procedure is to obtain specimens of such consistency that the number of drops (blows) required to close the groove on different trials will be both above and below 25. The number of drops should be less than 35 and should exceed 15. The test should always proceed from the dryer to the wetter condition of the soil.

12.19 Repeat subparagraphs 12.14 through 12.17 for each test specimen prepared in subparagraph 12.18.

13. Calculations

13.1 Calculate and record the moisture contents of the specimens tested.

7-1424 (12-86) Bureau of Reclamation	SOIL CONSISTENCY TEST (THREE-POINT LIQUID LIMIT METHOD)	Designation USBR 5355 - 89
SAMPLE NO. 5	FEATURE Example	PROJECT Example

Air dried [X]
Oven dried [ ]
Natural [ ]

Tested by _____ Date _____
Computed by _____ Date _____
Checked by _____ Date _____

	Plastic Limit		Liquid Limit		
Trial No.	1	2	1	2	3
Dish No.			19	20	21
No. of blows			16	21	34
Mass of dish + wet soil (g)			45.36	51.26	50.74
Mass of dish + dry soil (g)			43.20	47.95	48.85
Mass of dish (g)			33.94	33.24	40.07
Mass of water (g)			2.16	3.31	1.89
Mass of dry soil (g)			9.26	14.71	8.78
% moisture			23.3	22.5	21.5
Average plastic limit					

FLOW CURVE

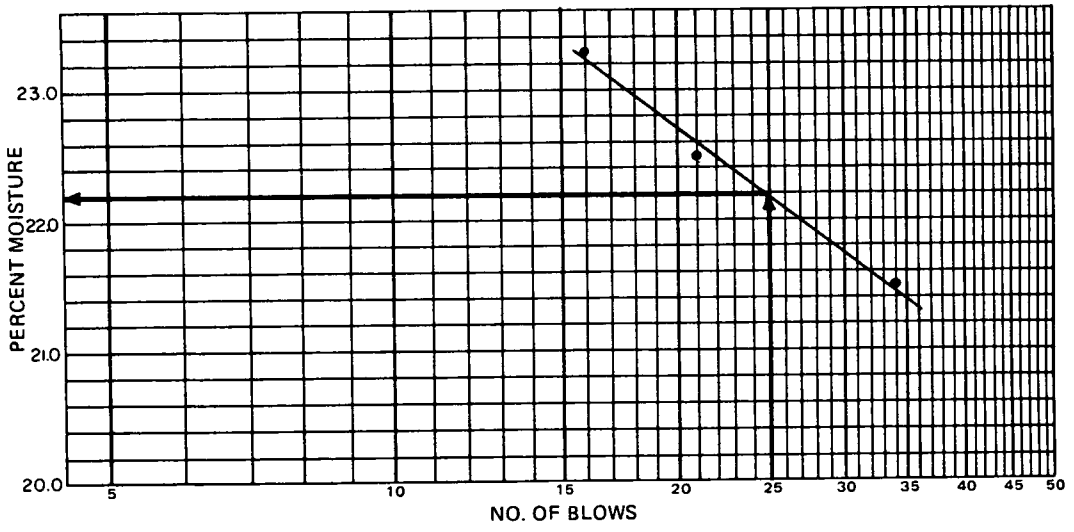

Liquid Limit (LL)	22	Plastic Limit (PL)		Plasticity Index (PI = LL – PL)	

SHRINKAGE TEST

Shrinkage dish no.		Vol. of shrinkage dish (V)	
Mass of dish - wet soil (g)		Vol. of dry soil (V_o)	
Mass of dish - dry soil (g)		$V - V_o$	
Mass of water (g)			
Mass of dish (g)		$\frac{V - V_o}{W_o}$	
Mass of dry soil (W_o) (g)			
% moisture		Shrinkage limit	
		Shrinkage ratio	

Auxiliary tests:
USBR 5205 - 89
USBR 5300 - 89
USBR 5360 - __
USBR 5365 - __

Remarks: From graph the LL @ 25 blows to the nearest 0.1 percent is 22.2 %

GPO 855 - 017

Figure 6. – Soil consistency test (three-point liquid limit method) — example.

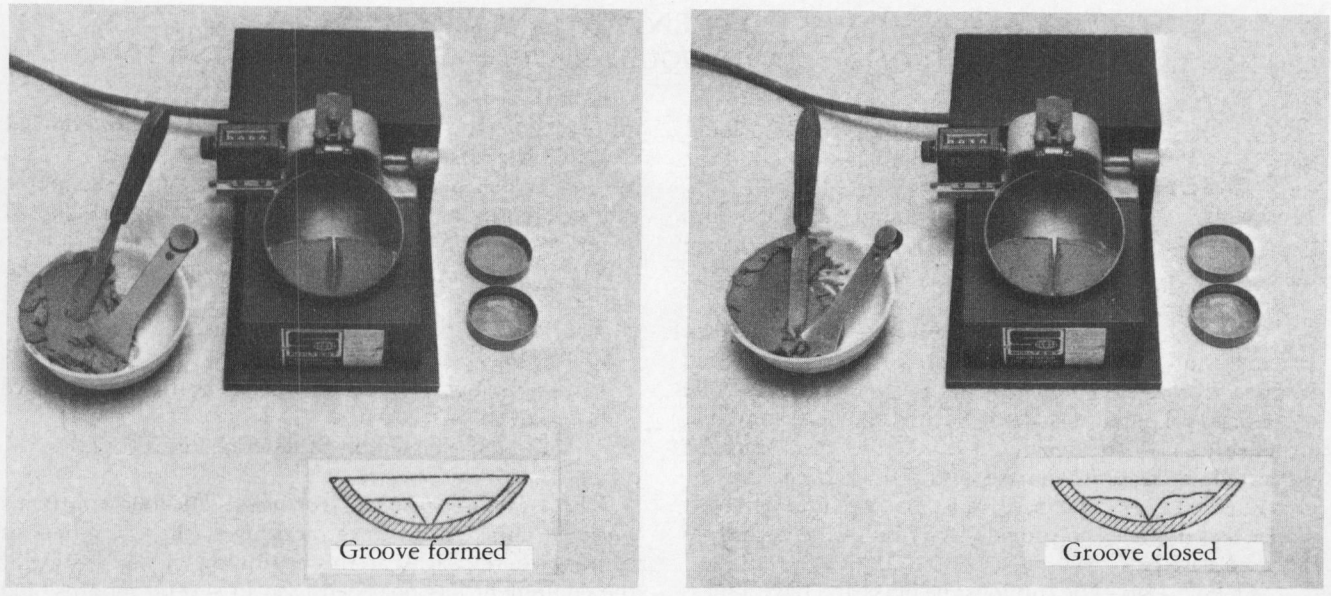

(a) Soil divided before test. Note groove formed in cup.

(b) Soil closed after test. Note groove closed in cup.

Figure 7. – Liquid limit test.

13.2 Plot a "flow curve" (fig. 6) representing the relationship between moisture content and corresponding number of blows for each test specimen on a semilogarithmic graph. Moisture content plots as the ordinate on the arithmetical scale and the number of blows as abscissa on the logarithmic scale. The flow curve is a straight line drawn as near as possible through three or more plotted points.

13.3 Determine and record the liquid limit of the soil specimen to the nearest 0.1 percent.

14. Interpretation of Results

14.1 The moisture content at the intersection of the flow curve and the 25-blow scale is the liquid limit of the soil specimen. Record this value to the nearest whole number.

15. Report

15.1 The report is to consist of a completed and checked "Soil Consistency Test (Three-Point Liquid Limit Method)" form (fig. 6).

15.2 All calculations are to show a checkmark and all plotting must be checked.

15.3 For reports, summary tables, etc., the LL value generally is reported to the nearest 1 percent. This also applies to the values for PL and SL.

APPENDIX

X1. INSPECTION AND CONDITION OF LIQUID LIMIT DEVICE AND GROOVING TOOL

X1.1 *Initial Acceptance.*–Upon receipt, the LL (liquid limit) device and the grooving tool must be inspected for conformance to the following requirements.

X1.1.1 *Essential Dimensions.*–Dimensions of the LL device, the grooving tool, and the height of drop gauge must conform to the dimensions as shown on figures 2, 3, and 4, respectively.

X1.1.2 *Base.*–The base must have a resilience such that an 8-mm(5/16-in) diameter polished steel ball—when dropped from a height of 250 mm (9.84 in)—will have an average rebound of at least 80 percent (200 mm) but no more than 90 percent (225 mm). The tests must be conducted on the finished base with feet attached.

X1.1.3 *Feet.*–The base must be supported by soft rubber feet designed to provide isolation of the base from the work surface.

X1.1.4 *Cup.*–The cup must be brass and have a mass (including cup hanger) of 200±15 g.

X1.1.5 *Cam.*–The cam must raise the cup smoothly and continuously to its maximum height through a distance of at least 80 degrees of cam rotation. The preferred cam motion is a uniformly accelerated lift curve. The design of the cam and follower combination must be such that there is no upward or downward velocity of the cup when the cam follower leaves the cam. The cam and follower design is for uniformly accelerated (parabolic) motion after contact and ensures that the cup has no velocity at drop off. Other cam designs also provide this feature and may be used. However, if the cam-follower lift pattern is not known, zero velocity at drop off can be ensured by carefully filing or machining the cam and follower so that the cup height remains constant over the last 20 to 45 degrees of cam rotation.

X1.1.6 *Carriage.*–The cup carriage must be constructed in a way that allows convenient but secure adjustment of the height of drop of the cup to 10 mm (0.394 in). The cup hanger must be attached to the carriage by means of a pin which allows removal of the cup and cup hanger for cleaning and inspection.

X1.1.7 *Motor Drive* (optional).–The motor must turn the cam at 2±0.1 revolutions per second, and must be isolated from the rest of the device by rubber mounts or in some way that prevents motor vibration from being transmitted to the rest of the apparatus. It must be equipped with an on–off switch and means of conveniently positioning the cam for height of drop adjustments. Check for excessive vibration by removing or raising the cup and cam follower assembly off the base and placing a 250-mL beaker half full of water on the base. With the motor running, not more than a barely recognizable ripple should be noticeable.

X1.2 *Annual Inspection.*–The following items must be checked annually:

- Resilience of base described in X1.1.2.
- Revolutions per second of cam by the motor drive as described in X1.1.7.
- Vibration of assembly as described in X1.1.7.

X1.3 *Periodic Inspection of Wear.*–The following items must be checked for wear monthly if the equipment is being used regularly, at the beginning of any testing if the equipment has not been used in several months, and at least on an annual basis.

X1.3.1 *Wear of Base.*–The spot on the base where the cup makes contact should be worn no greater than 10 mm (3/8 in) in diameter. If the wear spot is greater than this, the base can be machined to remove the worn spot provided the resurfacing does not make the base thinner than specified and the other dimensional relationships are maintained.

X1.3.2 *Wear of Cup.*–The cup must be replaced when the grooving tool has worn a depression in the cup 0.1 mm (0.004 in) deep or when the edge of the copy has been reduced to one-half its original thickness. Verify that the cup is firmly attached to the cup hanger.

X1.3.3 *Wear of Cup Hanger.*–Verify that the cup hanger pivot does not bind and is not worn to an extent that allows more than 3-mm (1/8-in) side-to-side movement of the lowest point on the rim.

X1.3.4 *Wear of Cam.*–The cam must not be worn to an extent that the cup drops before the cup hanger (cam follower) loses contact with the cam.

X1.3.5 *Grooving Tools.*–Inspect grooving tools for wear on a frequent and regular basis. The rapidity of wear depends on the material from which the tool is made and the types of soils being tested. Sandy soils cause rapid wear of grooving tools; therefore, when testing these materials, tools should be inspected more frequently than for other soils. Any tool with a tip width greater than 2.1 mm must not be used. The depth of the tip of the grooving tool must be 8.0±0.1 mm.

UNITED STATES DEPARTMENT OF THE INTERIOR
BUREAU OF RECLAMATION

USBR 5360-89

PROCEDURE FOR

DETERMINING THE PLASTIC LIMIT AND PLASTICITY INDEX OF SOILS

INTRODUCTION

This procedure is under the jurisdiction of the Geotechnical Services Branch, code D-3760, Research and Laboratory Services Division, Denver Office, Denver, Colorado. The procedure is issued under the fixed designation USBR 5360. The number immediately following the designation indicates the year of acceptance or the year of last revision.

1. Scope

1.1 This designation outlines the procedure for determining the plastic limit and plasticity index of soils.

1.2 The plastic limit of a soil is the moisture content at which a soil will begin to crack and crumble when rolled into threads approximately 1/8 inch (3 mm) in diameter. This moisture content corresponds to the arbitrary limit between the plastic and semisolid states of consistency of a soil.

1.3 The plastic limit test is one of three tests known as the Atterberg limits tests. The liquid limit and shrinkage limit test procedures are outlined in USBR 5350 and 5365. The plasticity index of a soil is obtained from results of the liquid limit and the plastic limit tests.

2. Auxiliary Tests

2.1 A test sample must be obtained in accordance with USBR 5205 prior to performing this procedure. As part of performing this procedure, the moisture content must be determined in accordance with USBR 5300. To obtain the plasticity index, the liquid limit must be obtained in accordance with USBR 5350 or 5355. Generally, the shrinkage limit and shrinkage ratio are determined in accordance with USBR 5365 in conjunction with this procedure.

3. Applicable Documents

3.1 *USBR Procedures*:
USBR 1012 Calibrating Balances or Scales
USBR 1020 Calibrating Ovens
USBR 1025 Checking Sieves
USBR 3900 Standard Definitions of Terms and Symbols Relating to Soil Mechanics
USBR 5205 Preparing Soil Samples by Splitting or Quartering
USBR 5300 Determining Moisture Content of Soil and Rock by the Oven Method
USBR 5350 Determining the Liquid Limit of Soils by the One-Point Method
USBR 5355 Determining the Liquid Limit of Soils by the Three-Point Method
USBR 5365 Determining Shrinkage Limit and Shrinkage Ratio of Soils

3.2 *ASTM Standards*:
E 11 Specification for Wire-Cloth Sieves for Testing Purposes
D 4318 Standard Test Method for Liquid Limit, Plastic Limit, and Plasticity Index of Soils

4. Significance and Use

4.1 The physical and engineering properties of most fine-grained soils, and particularly clayey soils, are greatly affected by the amount of water contained in the soil system. A clay, for example, may be very soft, or it may be very hard, depending on its moisture content. At moisture contents between those extremes, the clay may be molded and formed without cracking or rupturing. In this condition, the clay is referred to as being plastic. Plasticity is a significant characteristic of clays and is used to identify and distinguish clayey soils.

4.2 Four stages, or states, can be identified for describing the consistency of a soil: (1) the liquid state, (2) the plastic state, (3) the semisolid state, and (4) the solid state. These states of consistency are related to the moisture content. Although the transition between each of the states is gradual, test conditions have been established to arbitrarily determine the moisture content at a definite point in the transition from one stage of consistency to another. These moisture contents are called the liquid limit (LL), plastic limit (PL), and shrinkage limit (SL).

4.3 The significance of the limits and their relationship to the stages of consistency can be explained best by a discussion of figure 1. As a very wet, fine-grained soil dries, it passes progressively through different stages of consistency. In a very wet condition, the mass acts like a viscous liquid and is referred to as the liquid state. As the soil dries, there is a reduction in volume of the mass which is nearly proportional to the loss of moisture. When the moisture content in soil reaches a value equivalent to the liquid limit, the mass enters the plastic state.

4.4 The liquid limit and plasticity index furnish a basis for classification and identification of fine-grained soils and are used directly in specifications for controlling soil for use in fill and in semiempirical methods of design.

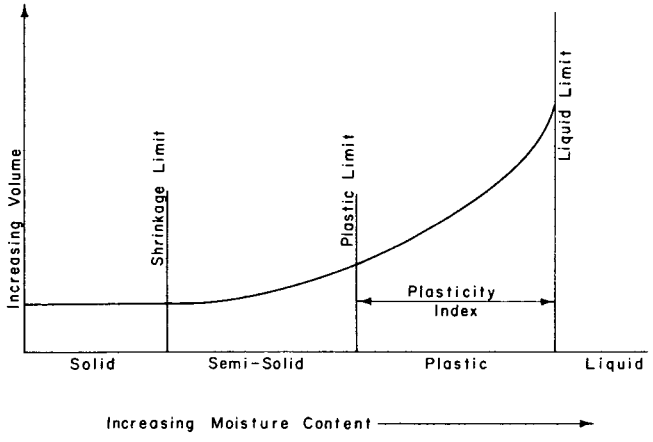

Figure 1. – Atterberg limits.

5. Terminology

5.1 Definitions are in accordance with USBR 3900. Terms of particular significance are:

5.1.1 *Atterberg Limits.*–The boundaries (determined by laboratory tests) of moisture content in a soil between the liquid state and plastic state (known as liquid limit), between the plastic state and the semisolid state (known as the plastic limit), and between the semisolid state and the solid state (known as the shrinkage limit).

5.1.2 *Consistency.*–The relative ease with which a soil can be deformed (ASTM definition).

5.1.3 *Plasticity Index* (PI).–Numerical difference between the liquid limit and the plastic limit (ASTM).

5.1.4 *Plastic Limit* (PL).–The moisture content corresponding to an arbitrary limit between the plastic and the semisolid states of consistency of a soil [ASTM(a)].

6. Apparatus

6.1 *Balance or Scale.*–A typical balance or scale used for this designation must be readable to 0.01 g and have a capacity of about 500 g.

6.2 *Moisture Container.*–A suitable moisture container to hold the sample such as a 6-ounce aluminum can with a lid.

6.3 *Dish.*–Porcelain, evaporating, 300-mL capacity, about 4-1/2-inches diameter by 2-inches deep (115 by 50 mm).

6.4 *Dish.*–Weighing, aluminum, about 2-inches diameter by 1/2-inch deep (50 by 12 mm).

6.5 *Spatula.*–A blade 4-inches (100-mm) long.

6.6 *Mortar and Pestle.*–Mortar, iron, or porcelain about 5 to 8 inches (125 to 200 mm) diameter with rubber-tipped pestle.

6.7 *Pan.*–Drying, small, metal, cast aluminum, about 8 by 8 by 2 inches (200 by 200 by 50 mm).

6.8 *Rod* (optional).–A metal or plastic rod or tube 1/8-inch (3.2-mm) diameter and about 4-inches (100-mm) long for judging the size of plastic limit thread.

6.9 *Drying Oven.*–An oven, thermostatically controlled, preferably of the forced-draft type, and capable of maintaining a uniform temperature of 230±9 °F (110±5 °C) throughout the drying chamber.

6.10 *Sieve.*–U.S.A. Standard series No. 40 (425 μm) conforming to the requirements of ASTM E 11.

6.11 *Rolling Surface.*–Ground glass plate or other material that does not absorb moisture.

7. Reagents and Materials

7.1 Use distilled water for preparing the plastic limit test specimen.

8. Precautions

8.1 *Technical Precautions*:

8.1.1 The test specimen should be prepared and processed as quickly as possible to minimize moisture loss.

8.1.2 Due to the effects of sampling, handling, processing, and testing on some materials, results of this test may not reflect in-place conditions or the properties of the material caused by processing and placement during construction. Of particular concern are materials such as soft and/or friable decomposed granite, sandstone, shale, limestone, claystone, etc., or soils affected by air and/or ovendrying. Such materials must be identified before processing, and the person requesting the test should verify whether standard procedures are to be followed, whether modifications are appropriate, or whether the material should be processed and tested at all. Cautionary statements must be made on test data forms and in reporting the test data.

9. Sampling, Test Specimens, and Test Units

9.1 *Sample Preparation*:

9.1.1 Prepare a test sample of about 500 g of minus No. 4 material in accordance with USBR 5205. This is the typical quantity for most soils which will provide enough material to perform the LL, PL, and SL tests. The test sample may need to be more, or may be less, but must be of sufficient size to provide the minimum mass of test specimen as described in subparagraph 9.2.1.

9.1.2 Air-dry the soil until any lumps will pulverize readily (see note 1).

NOTE 1.–This procedure also may be performed on material prepared at natural moisture content as described in ASTM D 4318.

9.2 *Test Specimen Preparation*:

9.2.1 Obtain sufficient soil from the test sample to provide a test specimen of at least 100 g of minus No. 40 material if only the LL test is required; 120 g if both the LL and PL are required; and 150 g if the LL, PL, and SL are required. If necessary, because of minimum availability of material, the LL, PL, and SL can be performed using a minimum specimen size of 100 g of minus No. 40 material by performing the LL test and using what is left for the PL and SL tests. If the sample is to be reduced in size, split as described in USBR 5205.

9.2.2 Pulverize the soil and separate on a No. 40 sieve using the following procedure. (If practical or desired, procedure may start at subpar. 9.2.2.2 instead of 9.2.2.1.)

9.2.2.1 Separate the soil on a No. 40 sieve.

9.2.2.2 Place all of the material retained on the No. 40 (or all of the material) in a mortar and pulverize using a rubber-tipped pestle. A rubber-tipped pestle is used to prevent crushing sand grains. Care must be taken when pulverizing not to crush individual particles.

9.2.2.3 Repeat the steps in subparagraphs 9.2.2.1 and 9.2.2.2 until the soil has been completely disaggregated and the material retained on the No. 40 consists only of individual sand grains.

9.2.3 Discard the material retained on the No. 40 sieve.

9.2.4 Thoroughly mix the material passing the No. 40 sieve.

9.3 *Test Specimen for Plastic Limit*:

9.3.1 Obtain about 15 g of soil that passed the No. 40 sieve. If necessary, split the soil in accordance with USBR 5205 (see subpar. 9.3.5).

9.3.2 Place the sample in an evaporating dish and thoroughly mix with distilled water using a spatula until the mass becomes sufficiently plastic to be easily shaped into a ball.

9.3.3 Place the sample in a suitable moisture container and allow to stand for a minimum of 16 hours (overnight).

9.3.4 From the sample prepared in subparagraph 9.3.3 obtain a test specimen having a mass of at least 8 grams.

9.3.5 If both the liquid and plastic limits are required, obtain a test specimen having a mass of at least 8 grams from the test specimen prepared for the liquid limit test in accordance with USBR 5350 or 5355.

9.3.5.1 Obtain the 8-gram test specimen at any stage during the mixing process at which the soil becomes plastic enough to be easily shaped into a ball without sticking to the fingers excessively when the soil is squeezed.

9.3.5.2 If the 8-gram test specimen is obtained before completion of the liquid test, place the specimen in a suitable moisture container and allow it to stand for at least 16 hours (overnight). If the specimen is obtained after completion of the liquid limit test and is too dry to permit rolling it into a 1/8-inch thread, add more water.

NOTE 2.–Moisture can be added to the specimen any time during the procedure if the material dries out excessively.

10. Calibration and Standardization

10.1 Verify that equipment is currently calibrated in accordance with the applicable calibration procedure. If the calibration is not current, perform the calibration before using the equipment for this procedure.

USBR 1012 Calibrating Balances or Scales
USBR 1020 Calibrating Ovens
USBR 1025 Checking Sieves

11. Conditioning

11.1 Test specimens should be prepared and processed as quickly as possible to minimize unrecorded moisture loss which would result in an erroneous moisture content determination for the test specimen.

11.2 Prepared test specimens should be allowed to stand a minimum of 16 hours in a suitable sample container to ensure even distribution of moisture throughout the soil.

12. Procedure

12.1 All data are to be recorded on the "Soil Consistency Test" form as shown on figure 2.

NOTE 3.–Figure 2 shows the PL data entered on the "Soil Consistency Test" form for the one-point liquid limit method. If a three-point liquid limit test is to be performed, the plastic limit data may be similarly entered on the "Soil Consistency Test" form for the three-point liquid limit method.

12.2 Squeeze and form the 8-gram test specimen obtained in accordance with paragraph 9 into an ellipsoidal-shaped mass.

12.3 Roll this mass between the fingers or palm of the hand and the ground-glass plate lying on a smooth horizontal surface with just sufficient pressure to roll the mass into a thread of uniform diameter throughout its length (fig. 3).

12.3.1 The rate of rolling is to be between 80 and 90 strokes per minute, counting a stroke as one complete motion of the hand forward and backward to the starting position.

12.4 When the diameter of the thread becomes 1/8 inch, break the thread into six to eight pieces.

12.5 Squeeze the pieces together between the thumbs and fingers of both hands into a uniform mass roughly ellipsoidal in shape and reroll.

12.6 Continue this alternate rolling into a 1/8-inch-diameter thread, gathering together, kneading, and rerolling until the thread crumbles under the pressure required for rolling and the soil can no longer be rolled into a thread. The crumbling may occur when the thread has a diameter greater than 1/8 inch. This is considered a satisfactory endpoint—provided the soil had been previously rolled into a 1/8-inch-diameter thread.

NOTE 4.–The crumbling will manifest itself differently with the different types of soil. Some soils fall apart in numerous aggregations of particles; others may form an outside tubular layer that starts splitting at both ends. The splitting progresses toward the middle until finally the thread falls apart in many small platy particles. Fat clay soils require much pressure to deform the thread, particularly as they approach the plastic limit and, finally, the thread breaks into a series of barrel-shaped segments each about 1/4 to 3/8 inch (6 to 10 mm) in length.

12.7 At no time should the operator attempt to produce failure at exactly 1/8 inch diameter by allowing the thread

7-1702 (11-85) Bureau of Reclamation

SOIL CONSISTENCY TEST (ONE-POINT LIQUID LIMIT METHOD)

Designation USBR 5360 - 89

SAMPLE NO.	FEATURE	PROJECT
1	Example	Example

Air dried ☒ Oven dried ☐ Natural ☐

Tested by _____ Date _____

Computed by _____ Date _____

Checked by _____ Date _____

	PLASTIC LIMIT		LIQUID LIMIT	
Trial No.	1	2	1	2
Dish No.	99	145	143	
No. of blows (N)	----	----	21/22	
Mass of dish + wet soil (g)	12.10	12.24	19.60	
Mass of dish + dry soil (g)	11.05	11.16	14.32	
Mass of dish (g)	6.28	6.26	6.13	
Mass of water (g)	1.05	1.08	5.28	
Mass of dry soil (g)	4.77	4.90	8.19	
Moisture %	22.0	22.0	W_n = 64.47	
Average Plastic Limit	22.0		F_n = 0.985	
			Liquid Limit	63.5

SHRINKAGE LIMIT

1. Shrinkage Dish No.	84	
2. Mass of dish + wet soil (g)	34.61	
3. Mass of dish + dry soil (g)	24.98	
4. Mass of dish (g)	11.56	
5. Mass of water (2 - 3) (g)	9.63	
6. Mass of dry soil (W_o) (3 - 4) (g)	13.42	
7. % Moisture (5/6 x 100)	71.8	
8. Vol. Shrinkage Dish (V)	14.90	
9. Vol. Dry Soil (V_o)	7.20	
10. $V - V_o$ = (8 - 9)	7.70	
11. $\frac{V - V_o}{W_o} \times 100 = \left(\frac{10}{6} \times 100\right)$	57.4	
12. Shrinkage Limit (7 - 11)	14.4	
13. Shrinkage Ratio (6/9)	1.86	

$$LL = W_n \left(\frac{N}{25}\right)^{0.120}$$

$$F_n = \left(\frac{N}{25}\right)^{0.120}$$

$$LL = (F_n)(W_n)$$

N	F_n
20	0.974
21	0.979
(22)	0.985
23	0.990
24	0.995
25	1.000
26	1.005
27	1.009
28	1.014
29	1.018
30	1.022

PLASTICITY INDEX: $PI = LL - PL$

$PI = 64 - 22 = 42$

LIQUID LIMIT (LL) = 64

PLASTIC LIMIT (PL) = 22

PLASTICITY INDEX (PI) = 42

SHRINKAGE LIMIT (SL) = 14

Auxiliary tests: USBR 5205 - 89
USBR 5300 - 89
USBR 5350 - 89
USBR 5360 - 89
USBR 5365 - 89

Remarks: _____

GPO 849-227

Figure 2. – Soil consistency test (one-point liquid limit method) — example.

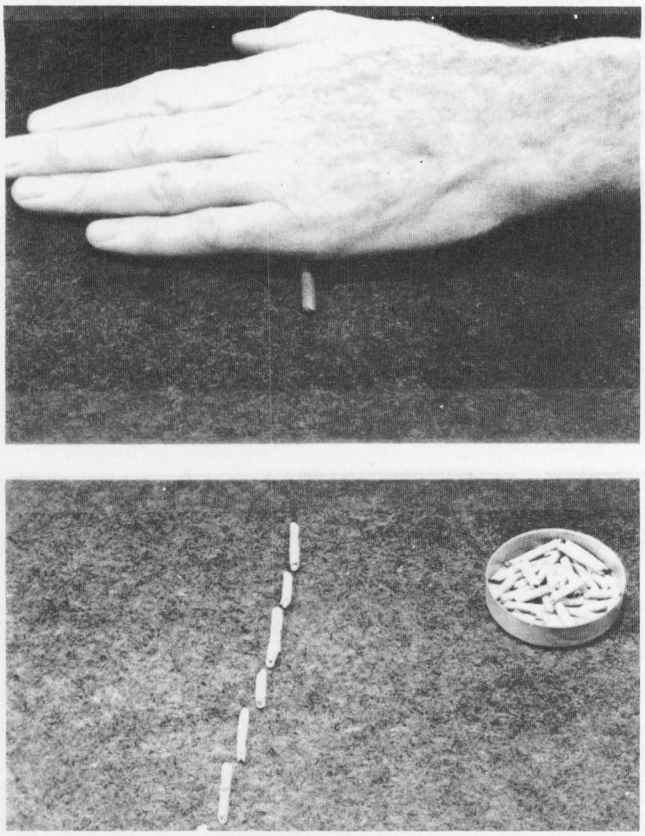

Figure 3. – Test for plastic limit.

to reach 1/8 inch, then reducing the rate of rolling or the hand pressure, or both, and continuing the rolling without further deformation until the thread falls apart.

12.8 It is permissible, however, to reduce the total amount of deformation for slightly plastic soils by making the initial diameter of the ellipsoidal-shaped mass nearer to the required 1/8-inch final diameter.

12.9 If the soil specimen cannot be rolled to a thread of 1/8 inch by using any of the techniques described, it should be stated as such on the data form under *Remarks*, and the soil will be reported as nonplastic, NP.

12.10 When the soil reaches the cracking or crumbling point and cannot be rerolled, place the pieces of soil into a suitable moisture container.

12.11 Determine and record the moisture content of the test specimen in accordance with USBR 5300. The masses are to be determined and recorded to 0.01 g and the moisture content is to be calculated and recorded to 0.1 percent. This moisture content is the plastic limit of the test specimen.

12.12 Repeat subparagraphs 12.2 through 12.11 to obtain a second trial.

12.13 The difference between the moisture contents (plastic limit) of the two trials should be less than 2 percent. If the difference is greater than 2 percent, repeat the procedure until results are within the required range.

12.14 Calculate and record the average plastic limit.

12.15 Calculate and record the plasticity index.

13. Calculations

13.1 Calculate the average plastic limit.

$$PL = \frac{A + B}{2}$$

where:

PL = average plastic limit
A = moisture content of first trial
B = moisture content of second trial

13.2 Plasticity index can be determined upon completion of plastic limit test and the liquid limit test. Calculate the plasticity index using the expression:

Plasticity index (PI) = liquid limit (LL) – plastic limit (PL)

14. Interpretation of Results

14.1 The plasticity index is to be reported as nonplastic (NP) under the following conditions:

14.1.1 When the liquid limit or plastic limit cannot be determined using the standard testing procedures, report the PI as nonplastic, NP.

14.1.2 When the soil is very sandy, the plastic limit test is to be performed before the liquid limit test. If the plastic limit cannot be determined, report the plasticity index as nonplastic, NP (see subpar. 14.1.4).

14.1.3 When the plastic limit is either equal to or greater than the liquid limit, report the plasticity index as nonplastic, NP.

14.1.4 If the liquid limit or the plastic limit can be obtained, but the plasticity index is reported as nonplastic — in accordance with subparagraphs 14.1.1, 14.1.2, and 14.1.3 — the liquid or plastic limits are still of value for identifying special soil properties and should be reported along with the indicated nonplastic plasticity index.

15. Report

15.1 The report is to consist of the completed and checked "Soil Consistency Test (One-Point Liquid Limit Method)" form (fig. 2) or the "Soil Consistency Test (Three-Point Liquid Limit Method)" form (see USBR 5355).

15.2 All calculations are to show a checkmark.

15.3 For reports, summary tables, etc., the PL value generally is reported to the nearest 1 percent. This also applies to the values for LL and SL.

UNITED STATES DEPARTMENT OF THE INTERIOR
BUREAU OF RECLAMATION

USBR 5365-89

PROCEDURE FOR

DETERMINING SHRINKAGE LIMIT AND SHRINKAGE RATIO OF SOILS

INTRODUCTION

This procedure is under the jurisdiction of the Geotechnical Services Branch, code D-3760, Research and Laboratory Services Division, Denver Office, Denver, Colorado. The procedure is issued under the fixed designation USBR 5365. The number immediately following the designation indicates the year of acceptance or the year of last revision.

1. Scope

1.1 This designation outlines the procedure for determining the shrinkage limit and shrinkage ratio of a cohesive soil.

1.2 The data obtained using this procedure may be used to calculate shrinkage limit, shrinkage ratio, volumetric shrinkage, linear shrinkage, and approximate specific gravity.

1.3 Two alternative procedures are provided:

1.3.1 In method A, the mass in air minus the mass in water is used to determine the volume of the dried soil pat, and is referred to as the wax method.

1.3.2 In method B, the volume of displaced mercury is used to determine the volume of the dried soil pat, and is referred to as the mercury method.

CAUTION: Mercury is a toxic material and the mercury method is to be performed ONLY in the Geotechnical Services Branch in the Denver Office.

2. Auxiliary Tests

2.1 A soil sample must be obtained in accordance with USBR 5205 prior to performing this procedure. The moisture content must be determined in accordance with USBR 5300 as part of performing this procedure.

3. Applicable Documents

3.1 *USBR Procedures*:
USBR 1012 Calibrating Balances or Scales
USBR 1020 Calibrating Ovens
USBR 1025 Checking Sieves
USBR 3900 Standard Definitions of Terms and Symbols Relating to Soil Mechanics
USBR 5000 Determining Unified Soil Classification (Laboratory Method)
USBR 5005 Determining Unified Soil Classification (Visual Method)
USBR 5205 Preparing Soil Samples by Splitting or Quartering
USBR 5300 Determining Moisture Content of Soil and Rock by the Oven Method
USBR 5350 Determining the Liquid Limit of Soils by the One-Point Method
USBR 5355 Determining the Liquid Limit of Soils by the Three-Point Method
USBR 5360 Determining the Plastic Limit and Plasticity Index of Soils

3.2 *ASTM Standards*:
E 11 Specification for Wire-Cloth Sieves for Testing Purposes
D 427 Shrinkage Factors of Soils

4. Summary of Method

4.1 The shrinkage limit of a soil is the maximum moisture content at which a reduction in moisture content will not cause a decrease in the volume of the mass of soil. The shrinkage ratio of a soil is the ratio of a given volume change, expressed as a percentage of the dry volume, to the corresponding change in moisture content above the shrinkage limit, expressed as a percentage of the mass of the ovendried soil. In this procedure, the volume of an ovendried pat of soil is determined by the displacement of water or mercury to determine the shrinkage limit and the shrinkage ratio.

5. Significance and Use

5.1 The shrinkage factors covered by this procedure can only be determined on predominantly fine-grained cohesive soils which exhibit a dry strength when ovendried.

5.2 The term shrinkage limit, expressed as a moisture content in percent, represents the amount of water required to fill the voids of a given cohesive soil at its minimum void ratio obtained by ovendrying. The shrinkage limit can be used to evaluate the shrinkage potential, crack development potential, and swell potential of earthwork involving cohesive soils.

6. Terminology

6.1 Definitions are in accordance with USBR 3900. Terms of particular significance are:

6.1.1 *Linear Shrinkage* (L_s, %).–Decrease in one dimension of a soil mass, expressed as a percentage of the original dimension, when the moisture content is reduced from a given value to the shrinkage limit (ASTM definition).

6.1.2 *Shrinkage Limit (SL).*–The maximum moisture content at which a reduction in moisture content will not cause a decrease in the volume of the soil mass (ASTM).

6.1.3 *Shrinkage Ratio (R).*–The ratio of: (1) a given volume change, expressed as a percentage of the dry volume, to (2) the corresponding change in moisture content above the shrinkage limit, expressed as a percentage of the mass of the ovendried soil (ASTM).

6.1.4 *Volumetric Shrinkage (V_s, %).*–The decrease in volume, expressed as a percentage of the soil mass when dried, of a soil mass when the moisture content is reduced from a given percentage to the shrinkage limit (ASTM).

7. Apparatus

7.1 *General Apparatus*:

7.1.1 *Balance or Scale.*–A typical balance or scale used for this designation must be readable to 0.01 g and have a capacity of about 500 g.

7.1.2 *Dish, Evaporating.*–Porcelain, evaporating, 300-mL capacity, about 5-1/2 inches (140 mm) diameter by 2 inches deep (115 by 50 mm).

7.1.3 *Dish, Shrinkage.*–A circular porcelain or Monel metal milk dish having a flat bottom, about 1-3/4-inches diameter and 1/2-inch deep (45 by 15 mm).

7.1.4 *Drying Oven.*–An oven, thermostatically controlled, preferably of the forced-draft type, and capable of maintaining a uniform temperature of 230±9 °F (110±5 °C) throughout the drying chamber.

7.1.5 *Mortar and Pestle.*– Mortar, iron, or porcelain about 5 to 8 inches (125 to 150 mm) diameter with rubber-tipped pestle.

7.1.6 *Spatula.*–A blade 4 inches long.

7.1.7 *Straightedge.*–A stiff metal straightedge of convenient length. The scraping edge must be beveled if it is thicker than 1/8 inch (3 mm).

7.1.8 *Sieve.*–U.S.A. Standard series No. 40 (425 μm) sieve conforming to the requirements of ASTM E 11.

7.1.9 *Liquid Limit Device and Grooving Tool.*–As described in USBR 5350.

7.2 *Equipment Unique to This Procedure*:

7.2.1 *Dish, Glass or Plastic.*–A dish 2-1/4-inches diameter and 1-1/4-inches high (60 by 30 mm), the top rim of which is ground smooth and is in a plane essentially parallel with the bottom of the cup.

7.2.2 *Graduated Cylinder.*–25-mL capacity, graduated to 0.2 mL.

7.2.3 *Microcrystalline Wax.*–Sufficient quantity to cover the soil pat.

7.2.4 *Plate, Glass or Plastic.*–A plate with three metal prongs for immersing the soil pat in mercury as shown on figure 1.

7.2.5 *Sewing Thread.*–Fine.

7.2.6 *Water Bath.*–Of sufficient size to allow the soil pat to be submerged when determining mass in water.

7.2.7 *Wax Warmer.*–Sufficient temperature control to avoid overheating.

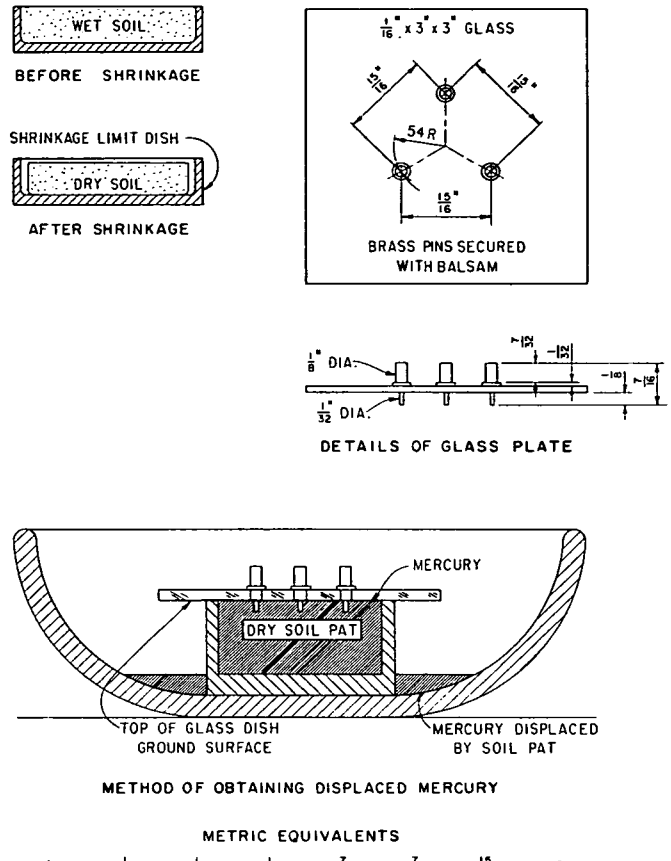

METRIC EQUIVALENTS

in.	1/32	1/16	1/8	7/32	7/16	15/16	3
mm	0.8	1.6	3.2	5.6	11.1	23.8	76.2

Figure 1. – Apparatus for determining the volumetric change [ASTM D 427, vol. 04.08].

8. Reagents and Materials

8.1 Distilled water to be used for wetting the soil.

8.2 Mercury without any foreign matter, sufficient to fill the glass dish to overflowing (see caution statement in subpar. 1.3.2).

9. Precautions

9.1 *Safety Precautions*:

9.1.1 This designation involves hazardous materials, operations, and equipment.

9.1.2 Mercury has been identified as a hazardous material; extreme care should be taken when working with it. Mercury should not be used without proper ventilation or if the user has open sores. Consult current organizational health and safety regulations before using mercury.

9.1.3 When the mercury method is used, the soil pat is considered contaminated with mercury and it must be disposed of as a hazardous waste product.

9.1.4 The equipment used in the mercury method is considered contaminated and must be handled and stored in accordance with current health and safety regulations.

9.1.5 Wax melting equipment or hot wax may burn unprotected skin; overheated wax may burst into flames; therefore, extreme care should be taken when working with hot wax.

9.2 *Technical Precautions*:

9.2.1 Due to the effects of sampling, handling, processing, and testing on some materials, results of this test may not reflect in-place conditions or the properties of the material caused by processing and placement during construction. Of particular concern are materials such as soft and/or friable decomposed granite, sandstone, shale, limestone, claystone, etc., or soils affected by air and/or ovendrying. Such materials must be identified before processing, and the person requesting the test should verify whether standard procedures are to be followed, whether modifications are appropriate, or whether the material should be processed and tested at all. Cautionary statements must be made on test data forms and in reporting the test data.

9.2.2 The calibration of the shrinkage dish must be performed using the same method as is used to determine the volume of the soil pat. Method A utilizes an accurate mass measurement of water to determine the volume of the dish and soil pat. Method B utilizes a relative volume method to determine the volume of the dish and soil pat. Test errors will result if the volume measurement methods are interchanged.

10. Sampling, Test Specimens, and Test Units

10.1 *Sample Preparation*:

10.1.1 Prepare a test sample of about 500 g of minus No. 4 material in accordance with USBR 5205. This is the typical quantity for most soils which will provide enough material to perform the LL, PL, and SL tests. The test sample may need to be more, or may be less, but must be of sufficient size to provide the minimum mass of test specimen as described in subparagraph 10.2.1.

10.1.2 Air-dry the soil until any lumps will pulverize readily.

10.2 *Test Specimen Preparation*:

10.2.1 Obtain sufficient soil from the test sample to provide a test specimen of at least 100 g of minus No. 40 material if only the LL test is required; 120 g if both the LL and PL are required; and 150 g if the LL, PL, and SL are required. If necessary, because of minimum availability of material, the LL, PL, and SL can be performed using a minimum specimen size of 100 g of minus No. 40 material by performing the LL test and using what is left for the PL and SL tests. If the sample is to be reduced in size, split as described in USBR 5205.

10.2.2 Pulverize the soil and separate on a No. 40 sieve using the following procedure. (If practical or desired, procedure may start at subpar. 10.2.2.2 instead of 10.2.2.1.)

10.2.2.1 Separate the soil on a No. 40 sieve.

10.2.2.2 Place all of the material retained on the No. 40 (or all of the material) in a mortar and pulverize using a rubber-tipped pestle. A rubber-tipped pestle is used to prevent crushing sand grains. Care must be taken when pulverizing not to crush individual particles.

10.2.2.3 Repeat the steps in subparagraphs 10.2.2.1 and 10.2.2.2 until the soil has been completely disaggregated and the material retained on the No. 40 consists only of individual sand grains.

10.2.3 Discard the material retained on the No. 40 sieve.

10.2.4 Thoroughly mix the material passing the No. 40 sieve.

10.3 *Test Specimen for Shrinkage Limit*:

10.3.1 Obtain about 30 g of soil that passed the No. 40 sieve. If necessary, split the soil in accordance with USBR 5205.

10.3.2 Place the specimen in the evaporating dish or similar container and thoroughly mix the specimen with distilled water. Add a sufficient amount of water to fill the soil voids and make the soil pastey enough to be readily worked into the shrinkage dish without inclusion of air bubbles. The amount of water required to furnish friable soils with the desired consistency is equal to or slightly greater than the liquid limit. The amount of water necessary to furnish plastic soils with the desired consistency may exceed the liquid limit by as much as 10 percent. It has been found that an acceptable moisture content is one that will produce about a 1/2-inch (13-mm) closure of the liquid limit groove in 10 blows.

11. Calibration and Standardization

11.1 Verify that equipment is currently calibrated in accordance with the applicable calibration procedure. If the calibration is not current, perform the calibration before using the equipment for this procedure.

USBR 1012 Calibrating Balances or Scales
USBR 1020 Calibrating Ovens
USBR 1025 Checking Sieves

11.2 *Shrinkage Dish-Volume Calibration—Method A*:

11.2.1 All data are to be recorded on the "Shrinkage Dish-Volume Calibration" form as shown on figure 2.

11.2.2 Lightly grease the inside of the shrinkage dish and face of the glass plate.

NOTE 1.–The face of the glass plate is greased to provide an adequate watertight seal while moving the dish and glass plate to the scale.

11.2.3 Determine and record the mass of the greased dish and greased plate.

11.2.4 Place water into the greased dish to overflowing.

11.2.5 Remove the excess water by pressing the greased glass plate over the top of the dish. Be sure all of the air is removed from within the dish. Dry the outside of the plate and dish.

11.2.6 Determine and record the mass of the greased dish, greased plate, and water.

11.2.7 Calculate and record the value of the mass of water.

11.2.8 Determine and record water temperature.

11.2.9 Obtain and record the absolute density of water from table 1 for the temperature recorded in subparagraph 11.2.8.

7-2312 (12-86) Bureau of Reclamation	SHRINKAGE DISH-VOLUME CALIBRATION	Designation USBR 5365 - 89

Dish No. 105

Calibration performed by _____ Date _____

Calibration checked by _____ Date _____

Trial A

1.	Mass of greased dish + greased plate + water	65.86	g
2.	Mass of greased dish + greased plate	51.33	g
3.	Mass of water = (1) − (2)	14.53	g
4.	Temperature of water	24.5	°C
5.	Absolute density of water from table 1	0.997171	
6.	Volume of dish = $\frac{(3)}{(5)}$	14.57	cm^3

Trial B

7.	Mass of greased dish + greased plate + water	65.91	g
8.	Mass of greased dish + greased plate	51.38	g
9.	Mass of water = (7) − (8)	14.53	g
10.	Temperature of water	24.5	°C
11.	Absolute density of water from table 1	0.997171	
12.	Volume of dish = $\frac{(9)}{(11)}$	14.57	cm^3
13.	Difference between Trial A and Trial B = (6) − (12)	0.00	cm^3
14.	Average dish volume = $\frac{(6) + (12)}{2}$	14.57	cm^3

NOTE: The difference in volume between trials is to be within ± 0.01 cm^3 (for wax method) or ± 0.1 cm^3 (for mercury method)

GPO 882-934

Figure 2. – Shrinkage dish — volume calibration example — method A.

Table 1. – Absolute density of water in grams per cubic centimeter.†

Degrees C	0	1	2	3	4	5	6	7	8	9
0	0.999841	847	854	860	866	872	878	884	889	895
1	900	905	909	914	918	923	927	930	934	938
2	941	944	947	950	953	955	958	960	962	964
3	965	967	968	969	970	971	972	972	973	973
4	973	973	973	972	972	972	970	969	968	966
5	965	963	961	959	957	955	952	950	947	944
6	941	938	935	931	927	924	920	916	911	907
7	902	898	893	888	883	877	872	866	861	855
8	849	843	837	830	824	817	810	803	796	789
9	781	774	766	758	751	742	734	726	717	709
10	700	691	682	673	664	654	645	635	625	615
11	605	595	585	574	564	553	542	531	520	509
12	498	486	475	463	451	439	427	415	402	390
13	377	364	352	339	326	312	299.	285	272	258
14	244	230	216	202	188	173	159	144	129	114
15	099	084	069	054	038	023	007	*991	*975	*959
16	0.998943	926	910	893	877	860	843	826	809	792
17	774	757	739	722	704	686	668	650	632	613
18	595	576	558	539	520	501	482	463	444	424
19	405	385	365	345	325	305	285	265	244	224
20	203	183	162	141	120	099	078	056	035	013
21	0.997992	970	948	926	904	882	860	837	815	792
22	770	747	724	701	678	655	632	608	585	561
23	538	514	490	466	442	418	394	369	345	320
24	296	271	246	221	196	171	146	120	095	069
25	044	018	992	*967	*941	*914	*888	*862	*836	*809
26	0.996783	756	729	703	676	649	621	594	567	540
27	512	485	457	429	401	373	345	317	289	261
28	232	204	175	147	118	089	060	031	002	*973
29	0.995944	914	885	855	826	796	766	736	706	676
30	646	616	586	555	525	494	464	433	402	371

† For inch-pound applications, multiply the values in this table by 62.4280 to convert to lbm/ft³.
* First three significant figures shown in line below.

11.2.10 Calculate and record the volume of the shrinkage dish. (Trial A)

11.2.11 Completely clean the dish and the glass plate and repeat subparagraphs 11.2.2 through 11.2.10. (Trial B)

11.2.12 If the difference in volume between the two trials is greater than ±0.01 cm³, repeat the procedure until the difference between any two trials is within ±0.01 cm³. Average and record the results from the two trials.

11.3 *Shrinkage Dish-Volume Calibration—Method B*:

11.3.1 The shrinkage dish volume is to be recorded on the "Shrinkage Dish–Volume Calibration" form as shown on figure 2.

11.3.2 Fill the shrinkage dish with mercury until it just begins to overflow (see subpars. 1.3.2 and 9.1 on safety requirements).

11.3.3 Remove the excess mercury by pressing a glass plate firmly over the top of the dish.

11.3.4 Measure, by means of a glass graduated cylinder, the volume of mercury held in the dish estimated to the nearest 0.1 mL. Record this volume as the volume of the shrinkage dish assuming that 1 cm³ is equal to 1 mL. (Trial A)

11.3.5 Repeat subparagraphs 11.3.2 to 11.3.4. (Trial B)

11.3.6 If the difference in volume between the two trials is greater than ±0.1 cm³, repeat the procedure until the difference between any two trails is within ±0.1 cm³. Average and record the results from the two trails.

12. Conditioning

12.1 Place the material for each soil specimen, as prepared in subparagraph 10.2, in a moisture proof container and store for a minimum standing time of 16 hours.

13. Procedure

13.1 All data are to be recorded on the "Shrinkage Limit and Shrinkage Ratio" form as shown on figure 3.

13.2 Lightly grease the inside of the shrinkage dish.

13.3 Determine the mass of the greased shrinkage dish and record the value as the mass of the empty shrinkage dish.

13.4 Place, in the center of the dish, an amount of the wetted soil equal to about one-third the volume of the dish and cause the soil to flow to the edges by tapping the dish on a firm surface cushioned by several layers of blotting paper or similar material. Add an amount of soil approximately equal to the first portion, and tap the dish until the soil is thoroughly compacted and all included air has been brought to the surface. Add more soil and continue the tapping until the dish is completely filled and excess soil stands out about its edge. Strike off the excess soil with a straightedge and wipe off all soil adhering to the outside of the dish.

13.5 Determine the mass of the dish immediately after it is filled and record the struck measure value as the mass of dish plus wet soil.

13.6 Allow the soil pat to dry in air until the color of the pat turns from dark to light. Ovendry the pat to constant mass at 230±9 °F (110±5 °C) and record the mass of dish plus dry soil.

NOTE 2.–Drying the soil pat in air may produce cracking of the soil due to rapid moisture losses in dry climates. If this problem is encountered, it may be necessary to dry the soil in a humidity controlled environment. In this case, it may take from 1 to 2 weeks for the color of the soil pat to turn from dark to light.

13.7 Determine and record the mass of the dry soil pat.

13.8 Calculate and record the moisture content of the soil at the time it was placed in the dish.

13.9 *Method A* (wax method).–Determine the volume of the dried soil pat:

13.9.1 Make a "cradle" for the soil pat by tying together the loose ends of a 250- to 300-mm piece of sewing thread (fig. 4).

13.9.2 Place the soil pat on the loop of thread (fig. 5).

13.9.3 Bring the tied end of thread over the soil pat and through the looped end of the thread (fig. 6).

13.9.4 Tighten by pulling the tied end through the loop (fig. 7).

7-2311 (6-86) Bureau of Reclamation	SHRINKAGE LIMIT AND SHRINKAGE RATIO			Designation USBR 5365 - 89	
SAMPLE NO. 1		FEATURE Example		PROJECT Example	
TESTED BY	DATE	COMPUTED BY	DATE	CHECKED BY	DATE

Method A (Wax Method) Shrinkage dish No. 105

1.	Mass of dish + wet soil	34.52	g
2.	Mass of dish + dry soil	25.44	g
3.	Mass of dish	12.26	g
4.	Mass of water = (1) − (2)	9.08	g
5.	Mass of dry soil (M_o) = (2) − (3)	13.18	g
6.	Moisture content (w) = (4)/(5) x 100	68.9	%
7.	Mass in air of dry soil + wax*	17.30	g
8.	Mass of wax = (7) − (5)	4.12	g
9.	Mass in water of soil + wax	6.3	g
10.	Volume of soil + wax = [(7) −(9)] / ρ_w**	11.0	cm^3
11.	Specific gravity of wax***	0.91	
12.	Volume of wax = (8)/(11)	4.53	cm^3
13.	Volume of dry soil (V_o) = (10) − (12)	6.47	cm^3
14.	Volume of dish (V) (From calibration sheet)	14.57	cm^3
15.	($V - V_o$) = (14) − (13)	8.10	cm^3
16.	$\frac{V - V_o}{M_o} \times 100 = \frac{(15)}{(5)} \rho_w^{**} \times 100$	61.5	%
17.	Shrinkage limit (SL) = (6) − (16)	7.4	%
18.	Shrinkage ratio (R) = $\frac{(5)}{[(13)\rho_w]}$	2.0	

* The term wax denotes microcrystalline wax.
** ρ_w @ 4°C = 1 g/cm3
***Specific Gravity of wax is obtained from manufacturer (usually 0.91)

Sample No. 2

Method B (Mercury Method) Shrinkage dish No. 106

1.	Mass of dish + wet soil	35.99	g
2.	Mass of dish + dry soil	27.08	g
3.	Mass of dish	12.37	g
4.	Mass of water = (1) − (2)	8.91	g
5.	Mass of dry soil (M_o) = (2) − (3)	14.71	g
6.	Moisture content (w) = (4)/(5) x 100	60.6	%
7.	Volume of dish (V) (From calibration sheet)	14.9	cm^3
8.	Volume of dry soil (V_o)	7.1	cm^3
9.	$V - V_o$ = (7) − (8)	7.8	cm^3
10.	$\frac{V - V_o}{M_o} \times 100 = \frac{(9)}{(5)} \rho_w^{**} \times 100$	53.0	%
11.	Shrinkage limit (SL) = (6) − (10)	7.6	%
12.	Shrinkage ratio (R) = $\frac{(5)}{(8)\rho_w}$	2.1	

GPO 851-367

Figure 3. - Shrinkage limit and shrinkage ratio — example.

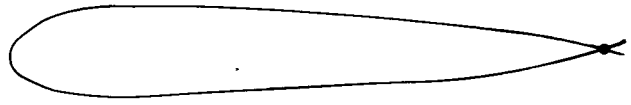

Figure 4. – "Cradle" for dry soil pat.

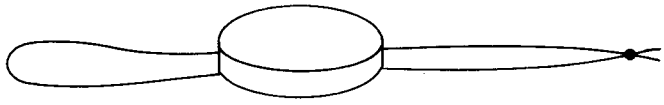

Figure 5. – Pat on loop of thread.

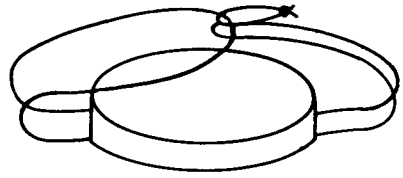

Figure 6. – Tied end over dry soil pat and through looped end.

Figure 7. – Tighten by pulling tied end to position shown.

13.9.5 Immerse the dry pat of soil in melted wax, holding the dry pat with the sewing thread, completely coating the pat. Do not allow air bubbles to develop in the wax coating. If air bubbles are present, use a sharp object to cut out the bubble; refill the hole with wax.

CAUTION: The melted wax and associated equipment are hot and care should be exercised to avoid burns.

13.9.6 Remove the pat of soil from the melted wax and allow the wax coating to cool.

13.9.7 Determine the mass of the wax-coated pat of soil in air and record the value as the mass in air of the dry soil and wax.

13.9.8 Determine the mass indicated when the wax-coated pat of soil is suspended from a balance while submerged in a water bath. Record this as the mass in water of the dry soil and wax.

13.9.9 Calculate and record the shrinkage limit.

13.10 *Method B* (mercury method).–Determine the volume of the dry soil pat:

13.10.1 Place the glass or plastic dish in an evaporating dish as shown on figure 1. Fill the glass dish to overflow with mercury (see subpars. 1.3.2 and 9.1 on safety requirements).

13.10.2 Remove the excess mercury by pressing the glass plate with the three prongs (fig. 1) firmly over the top of the dish. The excess mercury will collect in the evaporating dish.

13.10.3 Carefully wipe off any mercury that may be adhering to the outside of the dish.

13.10.4 Place the glass or plastic dish, filled with mercury, in the evaporating dish and place the soil pat on the surface of the mercury.

13.10.5 Carefully force the pat under the mercury with the glass plate, with the three prongs (fig. 1), and press the plate firmly over the top of the cup. It is essential that no air be trapped under the soil pat.

13.10.6 Using a graduated cylinder, measure the volume of mercury displaced into the evaporating dish. Record the value as the volume of dry soil, V_o, (see fig. 3).

13.10.7 Calculate and record the shrinkage limit.

13.10.8 The soil pat is considered contaminated with mercury and it must be disposed of as a hazardous waste product.

14. Calculations

14.1 *Calculation of Moisture Content*:

14.1.1 Calculate the moisture content of the soil at the time it was placed in the dish expressed as a percentage of the dry mass of the soil.

$$w = 100 \left(\frac{m - m_o}{m_o} \right) \quad (1)$$

where:

w = moisture content of the soil when placed in the dish, %

m = mass of wet soil obtained by subtracting the mass of the shrinkage dish from the mass of the dish and wet soil, g

m_o = mass of dry soil obtained by subtracting the mass of the shrinkage dish from the mass of the dish and dry pat, g

100 = convert from decimal to percent

14.2 *Determine the volume of the shrinkage dish*:

$$V = \frac{m}{\gamma_w} = \frac{\text{mass of water, g}}{\text{absolute density of water, g/cm}^3} \quad (2)$$

Record this as the volume of the shrinkage dish, V.

14.2.1 Determine the volume of dry pat of soil:

$$\text{Mass of water} = (\text{mass of dish + wet soil}) - (\text{mass of dish + dry soil}) \quad (3)$$

$$\text{Mass of dry soil, } m_o = (\text{mass of dish + dry soil}) - (\text{mass of dish}) \quad (4)$$

$$\text{Moisture content, } w = 100 \left(\frac{\text{mass of water}}{m_o} \right) \quad (5)$$

$$\text{Mass of wax} = (\text{mass in air of dry soil + wax}) - (\text{mass in air of dry soil}) \quad (6)$$

$$\text{Volume of pat + wax} = (\text{mass in air of dry soil + wax}) - (\text{mass in water of dry soil + wax}) \quad (7)$$

$$\text{Volume of wax} = \frac{\text{mass of wax, g}}{\text{(specific gravity of wax) 1 g/cm}^3} \quad (8)$$

$$\text{Volume of dry soil, } V_o = \text{(volume of pat + wax) - (volume of wax)} \quad (9)$$

NOTE 3.–Absolute density of water is assumed equal to 1.0; if more accuracy is required, corrections for temperature may be necessary.

14.3 *Shrinkage Limit SL*:

$$SL = w - 100 \left(\frac{V - V_o}{m_o}\right) \rho_w \quad (10)$$

where:
SL = shrinkage limit
w = moisture content of wet soil, in percentage of the mass of ovendried soil, %
V = volume of wet soil pat = volume of the shrinkage dish
V_o = volume of dry soil pat
m_o = mass of ovendried soil pat, g
ρ_w = 1 g/cm³ at 4 °C

14.3.1 *Optional Method.*–When both the specific gravity, G_s, and the shrinkage ratio, R, are known, calculate the shrinkage limit as follows:

$$SL = 100 \left(\frac{1}{R} - \frac{1}{G_s}\right) \quad (11)$$

14.4 *Shrinkage Ratio R.*–Calculate the shrinkage ratio, R, from the data obtained in the volumetric shrinkage determination.

$$R = \frac{m_o}{V_o \rho_w} \quad (12)$$

See reference [1].

14.5 *Calculation of Volumetric Shrinkage, Linear Shrinkage, and Specific Gravity*:

14.5.1 The volumetric shrinkage, V_s, is calculated.

$$V_s = R (w_1 - SL) \quad (13)$$

where:
V_s = volumetric shrinkage
w_1 = given percentage of moisture content, %
SL = shrinkage limit
R = shrinkage ratio

14.5.2 The linear shrinkage, L_s, is calculated.

$$L_s = 100 \left[1 - \left(\frac{100}{V_s + 100}\right)^{1/3}\right] \quad (14)$$

14.5.3 The specific gravity of the soil solids, G_s, may be calculated.

$$G_s = \frac{1}{\frac{1}{R} - \frac{SL}{100}} \quad (15)$$

15. Report

15.1 The report is to consist of a completed and checked "Shrinkage Limit and Shrinkage Ratio" form (fig. 3).

15.2 All calculations are to show a checkmark.

15.3 For reports, summary tables, etc., the *SL* value generally is reported to the nearest 1 percent. This also applies to the values for LL and PL.

16. Background Reference

Head, K. H., *Manual of Laboratory Testing*, vol. 1, ELE International Ltd., Pentech Press, London, 1984.

UNITED STATES DEPARTMENT OF THE INTERIOR
BUREAU OF RECLAMATION

USBR 5370-89

PROCEDURE FOR

DETERMINING UNIT WEIGHT OF CYLINDRICAL SOIL SPECIMENS

INTRODUCTION

This procedure is under the jurisdiction of the Geotechnical Services Branch, code D-3760, Research and Laboratory Services Division, Denver Office, Denver, Colorado. This procedure is issued under the fixed designation USBR 5370. The number immediately following the designation indicates the year of acceptance or the year of last revision.

1. Scope

1.1 This designation outlines the procedure for determining the unit weight of any soil specimen of uniform cylindrical shape.

2. Auxiliary Tests

2.1 The moisture content must be determined in accordance with USBR 5300 as part of performing this procedure.

3. Applicable Documents

3.1 *USBR Procedures*:
USBR 3900 Standard Definitions of Terms and Symbols Relating to Soil Mechanics
USBR 5300 Determining Moisture Content of Soil and Rock by the Oven Method
3.2 *ASTM Standard*:
E 11 Specification for Wire-Cloth Sieves for Testing Purposes

4. Summary of Method

4.1 The diameter and length of a cylindrical soil specimen are carefully measured, and the volume of the specimen is calculated. The mass of the specimen is determined and the wet unit weight calculated. The moisture content of the soil is determined, and the dry unit weight is calculated.

5. Significance and Use

5.1 A careful assessment of unit weight is important in earthwork because varying unit weights in a soil mass can correspond to significantly different engineering properties. An increased unit weight generally corresponds to increased strength, reduced permeability, and reduced compressibility of the soil mass.

5.2 Cylindrical soil specimens are used in tests such as triaxial shear, one-dimensional consolidation, and unconfined compression. To have meaningful test results, accurate values of specimen volume, density, and unit weight are essential.

6. Terminology

6.1 Definitions are in accordance with USBR 3900. Terms of particular significance are:

6.1.1 *Unit Weight* (γ).–Weight per unit volume (ASTM definition).

6.1.2 *Dry Unit Weight* (γ_d).–The weight of solid particles per unit of total volume.

6.1.3 *Wet Unit Weight* (γ_{wet}).–The unit weight of solids plus water per unit volume, irrespective of the degree of saturation.

6.1.4 *Density* (ρ).–Mass per unit volume (ASTM).

7. Apparatus

7.1 *Balances or Scales.*–Typical balances or scales used for this designation are:

Application	*Readable to*	*Approximate capacity*
Mass of specimen, in-lb	0.01 lbm	2 lbm
Mass of specimen, SI	0.1 g	1000 g

7.2 *Drying Oven.*–An oven, thermostatically controlled, preferably of the forced-draft type, and capable of maintaining a uniform temperature of 230±9 °F (110±5 °C) throughout the drying chamber.

7.3 *Vernier or Dial Caliper.*–For inch-pound unit applications, a vernier or dial caliper scaled to read 0.1 inch is to be used. For metric applications, a vernier or dial caliper scaled to read 1 millimeter is to be used. The required length of the caliper depends on the length of the specimen being measured.

7.4 *Flexible Metal Printed Tape or Engraved Rule.*–A linear measurement device graduated to read in 1/16- or 0.1-inch (1-mm) increments.

7.5 *Pi Tape.*–A scaled pi (π) tape 2- to 12-inch outside diameter and readable to 0.001 inch, or a metric pi tape 30 to 200 mm outside diameter and readable to 0.01 mm.

7.6 *Sieve.*–U.S.A. Standard series No. 4 (4.75 mm) sieve conforming to requirements of ASTM E 11.

8. Precautions

8.1 *Safety Precautions.*–This designation may involve hazardous materials, operations, and equipment.

8.2 *Technical Precautions.*–This procedure is applicable only to cylindrical soil specimens which are intact and can maintain their shape in an unconfined state.

9. Calibration and Standardization

9.1 Verify that equipment is currently calibrated in accordance with the applicable calibration procedure. If the calibration is not current, perform the calibrations before using the equipment for this procedure.

10. Conditioning

10.1 The soil specimens should be prepared and processed as quickly as possible to minimize unrecorded moisture loss which would result in an erroneous moisture content determination.

11. Procedure for Uniform Cylindrical Specimens

11.1 All data are to be recorded on the "Moisture Content and Unit Weight Determination of Cylindrical Specimens" form as shown on figure 1A (in-lb units) or figure 1B (SI units).

11.2 *Determine Volume of Specimen*:

11.2.1 Measure and record the diameter of the cylindrical specimen at three different locations along the specimen with a pi (π) tape or other appropriate measuring device. These measurements are to be taken at approximately the one-quarter points along the cylindrical specimen length. Record the specimen diameter values to the nearest 0.001 inch (0.01 mm).

11.2.2 Calculate and record the average specimen diameter to the nearest 0.001 inch (0.01 mm).

11.2.3 For SI units, convert and record the average specimen diameter to the nearest 0.001 cm.

11.2.4 Calculate and record the area of the cylindrical specimen to the nearest 0.001 in^2 (0.01 cm^2).

11.2.5 Measure and record the length of the cylindrical specimen at three different locations on the cylinder using a flexible metal printed tape, engraved rule, or calipers. These measurements are to be taken at approximately the one-third points around the circumference of the specimen. Record the specimen lengths to the nearest 1/16 or 0.1 inch (1 mm).

11.2.5.1 Record initial and final readings, if required, on the data form where specimen length is recorded. The specimen length is determined by subtracting the initial measuring device reading from the final measuring device reading.

11.2.6 Calculate and record the average specimen length to the nearest 1/16 or 0.1 inch (1 mm).

11.2.6.1 For SI units, convert and record the average specimen length to the nearest 0.1 cm.

11.2.7 Calculate and record the volume of the cylindrical specimen to the nearest 0.1 in^3 (0.1 cm^3).

11.3 *Determine Wet Unit Weight of Specimen*:

11.3.1 Determine and record the mass of the cylindrical specimen to the nearest 0.01 lbm (0.1 g).

11.3.2 Calculate and record the wet density of the cylindrical specimen to the nearest 0.1 lbm/ft^3 (1 kg/m^3).

11.3.2.1 For inch-pound applications, convert wet density to wet unit weight by changing lbm/ft^3 to lbf/ft^3 and record to the nearest 0.1 lbf/ft^3. (Assume 1 lbf = 1 lbm.)

11.3.2.2 For SI applications, calculate and record the wet unit weight of the cylindrical specimen to the nearest 0.01 kN/m^3.

11.4 *Determine Moisture Content.*–As appropriate, the moisture content can be determined using an adjacent piece of core, material from the parent sample from which the cylindrical specimen was prepared, the cylindrical specimen itself, or a portion of the cylindrical specimen.

- If the moisture content is uniform throughout the cylindrical specimen (as in a prepared specimen), only one moisture content determination is necessary (see fig. 1B).
- If the moisture content varies throughout the cylindrical specimen (as in core sample), a moisture content should be determined for both the top and bottom of the specimen (see fig. 1A).
- If the cylindrical specimen consists of only minus No. 4 (4.75 mm) sieve-size material, follow the procedure in subparagraph 11.4.1.
- If the moisture content is uniform and the cylindrical specimen consists of both plus No. 4 (4.75 mm) and minus No. 4 (4.75 mm) sieve-size material, follow the procedure in subparagraph 11.4.2.
- If the moisture content varies and the specimen contains both plus No. 4 (4.75 mm) and minus No. 4 (4.75 mm) material, follow the procedure in subparagraph 11.4.3.

11.4.1 The moisture content of cylindrical specimens consisting of minus No. 4 sieve-size particles only should be determined in accordance with USBR 5300.

11.4.1.1 If the moisture content is uniform, as in a prepared specimen, obtain a representative specimen of the material used to prepare the cylindrical specimen and use it as the moisture content specimen. The moisture content of this specimen is considered to be the average moisture content of the cylindrical specimen. Record the average moisture content to the nearest 0.1 percent.

11.4.1.2 If the moisture content varies, obtain a representative moisture content specimen from each end of the cylindrical specimen. Designate each moisture content specimen as "top" or "bottom" as appropriate. Determine and record the moisture content of the top and bottom specimens and calculate and record the average moisture content of the cylindrical specimen to the nearest 0.1 percent.

11.4.2 The moisture content of cylindrical specimens having a uniform moisture content and consisting of both minus No. 4 and plus No. 4 sieve-size particles should be determined according to the following procedure:

11.4.2.1 Determine and record the total wet mass of the specimen. Separate the plus No. 4 sieve-size material from the total specimen by screening the material over a No. 4 sieve. Save both portions.

11.4.2.2 Wash the plus No. 4 portion to remove any minus No. 4 sieve-size material which may be adhering to the coarse-size particles.

11.4.2.3 Dry the plus No. 4 portion by blotting with a towel.

11.4.2.4 Determine and record the wet mass of the plus No. 4 portion to the nearest 0.1 gram.

11.4.2.5 Calculate and record the wet mass of the minus No. 4 portion of the specimen to the nearest 0.1 gram.

11.4.2.6 Calculate and record the dry mass of the plus No. 4 portion of the specimen to the nearest 0.1 gram.

NOTE 1.–Assume the plus No. 4 material is in the SSD (saturated surface dried) condition and has an absorbed moisture content of 1.5 percent. If the material is porous, then the moisture content should be determined in accordance with USBR 5300.

11.4.2.7 Determine and record the moisture content of the minus No. 4 portion of the specimen in accordance with USBR 5300.

11.4.2.8 Calculate and record the dry mass of the minus No. 4 portion of the specimen to the nearest 0.1 gram.

11.4.2.9 Calculate and record the dry mass of the total moisture content specimen to the nearest 0.1 gram.

11.4.2.10 Calculate and record the percentage by mass of plus No. 4 material in the total moisture content specimen to the nearest 0.1 percent.

11.4.2.11 Calculate and record the percentage by mass of minus No. 4 material in the total moisture content specimen to the nearest 0.1 percent.

11.4.2.12 Calculate and record the moisture content of the total specimen to the nearest 0.1 percent.

11.4.3 For cylindrical specimens with nonuniform moisture content and which consist of both minus No. 4 and plus No. 4 sieve-size particles, obtain a moisture content specimen representing each end of the cylindrical specimen. Designate each specimen as "top" or "bottom" as appropriate. Determine the moisture content of the "top" specimen and the "bottom" specimen separately by following the procedure in subparagraphs 11.4.2.1 through 11.4.2.12 for each specimen.

11.4.3.1 Calculate and record the average moisture content to the nearest 0.1 percent.

11.5 Using the average moisture content and the wet unit weight, calculate and record the dry unit weight of the cylindrical specimen to the nearest 0.1 lbf/ft³ (0.01 kN/m³).

12. Calculations

NOTE 2.–Numbers contained in parentheses correspond to line numbers on data forms.

12.1 *Calculation of Moisture Content of a Soil Specimen Containing Plus No. 4 Sieve-Size Material.*–The following calculations are used in both methods of density determinations previously discussed in this procedure.

12.1.1 Calculate the wet mass of the minus No. 4 sieve-size portion of the moisture content specimen.

$$(12) = (10) - (11) \quad (1)$$

where:
(12) = wet mass of minus No. 4 material, g
(11) = wet mass of plus No. 4 material, g
(10) = total wet mass of moisture content specimen, g

12.1.2 Calculate the dry mass of the plus No. 4 portion of the moisture content specimen.

$$(13) = \frac{(11)}{1 + \frac{(8)}{100}} \quad (2)$$

where:
(13) = dry mass of plus No. 4 material, g
(8) = moisture content of plus No. 4 material, %
100 = convert from percent to decimal

12.1.3 Calculate the dry mass of the minus No. 4 portion of the moisture content specimen.

$$(14) = \frac{(12)}{1 + \frac{(9)}{100}} \quad (3)$$

where:
(14) = dry mass of minus No. 4 material, g
(9) = moisture content of minus No. 4 material, %
100 = convert from percent to decimal

12.1.4 Calculate the total dry mass of the moisture content specimen.

$$(15) = (13) + (14) \quad (4)$$

where (15) equals total dry mass of the moisture content specimen, g.

12.1.5 Calculate the percentage by mass of plus No. 4 material in the total moisture content specimen.

$$(16) = \frac{(13)}{(15)} \quad (5)$$

where (16) equals percentage of plus No. 4 material in moisture content specimen, %.

12.1.6 Calculate the percentage by mass of minus No. 4 material in the total moisture content specimen.

$$(17) = 100 - (16) \quad (6)$$

where (17) equals percentage of minus No. 4 material in the moisture content specimen, %.

12.1.7 Calculate the moisture content of the total top or bottom moisture content specimen.

$$(18) = \frac{(16) \times (8)}{100} + \frac{(17) \times (9)}{100} \quad (7)$$

where (18) equals moisture content of total top or bottom specimen, %.

12.1.8 Calculate the average moisture content of the soil specimen.

$$(19) = \frac{(18)_{Top} + (18)_{Bottom}}{2} \quad (8)$$

where (19) equals average moisture content of soil specimen, %.

12.2 *Uniform Cylindrical Specimens* (in-lb units, fig. 1A):

12.2.1 Calculate area of the soil specimen.

$$(2) = 0.7854 \times (1)^2 \quad (9)$$

where:
(2) = area of soil specimen, in²
(1) = average diameter of soil specimen, in
0.7854 = constant, $\pi/4$

12.2.2 Calculate the volume of the soil specimen.

$$(4) = (2) \times (3) \quad (10)$$

where:
(3) = average length, in
(4) = volume of soil specimen, in³

12.2.3 Calculate the wet density.

$$(6) = \frac{(5) \times 1{,}728}{(4)} \quad (11)$$

where:
(6) = wet density, lbm/ft³
(5) = mass of soil specimen, lbm
1,728 = change in³ to ft³

12.2.3.1 Wet density is converted to wet unit weight by changing lbm/ft³ to lbf/ft³. (Assume 1 lbm = 1 lbf.)

12.2.4 Calculate the dry unit weight of the soil specimen.

$$(20) = \frac{(7)}{1 + \frac{(19)}{100}} \quad (12)$$

where:
(7) = wet unit weight, lbf/ft³
(20) = dry unit weight, lbf/ft³
(19) = average moisture content of soil specimen, %
100 = convert from percent to decimal

12.3 *Uniform Cylindrical Specimens* (metric units, fig. 1B):

12.3.1 Calculate the average soil specimen diameter.

$$(2) = \frac{(1)}{10} \quad (13)$$

where:
(2) = soil specimen diameter, cm
(1) = average specimen diameter, mm
10 = change millimeters to centimeters

12.3.2 Calculate the area of the soil specimen.

$$(3) = 0.7854 \times (2)^2 \quad (14)$$

where:
(3) = area of soil specimen, cm²
0.7854 = constant, $\pi/4$

12.3.3 Calculate the average length of the soil specimen.

$$(5) = \frac{(4)}{10} \quad (15)$$

where:
(4) = average length of soil specimen in millimeters, mm
(5) = average length of soil specimen in centimeters, cm
10 = change millimeters to centimeters

12.3.4 Calculate the volume of the soil specimen.

$$(6) = (3) \times (5) \quad (16)$$

where (6) equals volume of soil specimen, cm³.

12.3.5 Calculate the wet density.

$$(20) = \frac{(7) \times 1000}{(6)} \quad (17)$$

where:
(20) = wet density, kg/m³
(7) = wet mass of soil specimen, g
1000 = change g/cm³ to kg/m³

12.3.6 Calculate the wet unit weight.

$$(21) = (20) \times 0.009\,807 \quad (18)$$

where:
(21) = wet unit weight, kN/m³
0.009 807 = 9.807/1000
9.807 = acceleration of gravity, constant to convert from kg to N
1000 = change N to kN

12.3.7 Calculate the dry unit weight of the soil specimen.

$$(22) = \frac{(21)}{1 + \frac{(19)}{100}} \quad (19)$$

where:
(22) = dry unit weight, kN/m³
(19) = average moisture content of soil specimen, %
100 = convert from percent to decimal

13. Report

13.1 The report is to consist of a completed and checked "Moisture Content and Unit Weight Determination of Cylindrical Specimens" form (fig. 1A or 1B).

13.2 All calculations are to show a checkmark.

7-2338 (12-86) Bureau of Reclamation	MOISTURE CONTENT AND UNIT WEIGHT DETERMINATION OF CYLINDRICAL SPECIMENS	Designation USBR 5370 - 89
SAMPLE NO. 14	PROJECT Example	FEATURE Example
SPECIMEN NO. 62Z-3	HOLE NO. 15-2	DEPTH 0.0-5.0 ft.
TESTED BY DATE	COMPUTED BY DATE	CHECKED BY DATE

	Soil specimen diameter	a	2.023	(in)
		b	2.020	(in)
		c	2.025	(in)
(1)	Average specimen diameter		2.023	(in)
(2)	Soil specimen area		3.214 = 0.7854 x (1)^2	(in^2)
	Length of soil specimen	a	5.0	(in)
		b	5.0	(in)
		c	5.0	(in)
(3)	Average length of soil specimen		5.0	(in)
(4)	Soil specimen volume		16.1 = (2) x (3)	(in^3)
(5)	Wet mass of soil specimen		1.12	(lbm)
(6)	Wet density		120.2 = (5) x 1728/(4)	(lbm/ft^3)
(7)	Wet unit weight*		120.2	(lbf/ft^3)
(20)	Dry unit weight		109.3 = (7)/[1 + (19)/100]	(lbf/ft^3)

	Moisture content		Top		Bottom	
			+ No. 4	– No. 4	+ No. 4	– No. 4
	Dish No.			32		49
	Mass of dish + wet soil	(g)		359.9		358.4
	Mass of dish + dry soil	(g)		342.4		339.6
	Mass of dish	(g)		155.7		162.3
	Mass of water	(g)		17.5		18.8
	Mass of dry soil	(g)		186.7		177.3
(8)	Moisture content + No. 4 **	(%)				
(9)	Moisture content – No. 4 **	(%)		9.4		10.6
	Complete the following only if + No. 4 is present:					
(10)	Total wet mass of moisture specimen	(g)				
(11)	Mass of wet + No. 4	(g)				
(12)	Mass of wet – No. 4	(g)				
(13)	Mass of dry + No. 4	(g)				
(14)	Mass of dry – No. 4	(g)				
(15)	Mass of dry moisture specimen (+ No. 4) + (– No. 4)	(g)				
(16)	Percentage of particle size					
(17)	Percentage of particle size			100		100
(18)	Moisture content of total specimen ***	(%)	9.4		10.6	
(19)	Average moisture content	(%)	10.0			

Remarks:

Auxiliary Test:

USBR 5300 - 89

* Implies 1lbm = 1lbf

** If + No. 4 is not porous, a moisture content (% absorption) of 1.5 percent may be assumed for + No. 4 material only.

*** $(18) = \frac{(16) \times (8)}{100} + \frac{(17) \times (9)}{100}$

Constants: 0.7854 = $\pi/4$

1728 = Convert in^3 to ft^3

GPO 850 - 056

Figure 1A. - Moisture content and unit weight determination of cylindrical specimens — in-lb units example.

7M-2338 (5-86) Bureau of Reclamation	MOISTURE CONTENT AND UNIT WEIGHT DETERMINATION OF CYLINDRICAL SPECIMENS	Designation USBR 5370 - 89

SAMPLE NO.	PROJECT	FEATURE
23 (sack)	Example	Example

SPECIMEN NO.	HOLE NO.	DEPTH
61S-428	Borrow Area A	0.0-3.0m

TESTED BY	DATE	COMPUTED BY	DATE	CHECKED BY

	Soil specimen diameter	a	50.80		(mm)
		b	50.80		(mm)
		c	50.80		(mm)
(1)	Average soil specimen diameter		50.80		(mm)
(2)	Soil specimen diameter in centimeters		5.080	= (1)/10	(cm)
(3)	Soil specimen area		20.27	= 0.7854 x (2)^2	(cm^2)
	Length of soil specimen	a	127		(mm)
		b	127		(mm)
		c	127		(mm)
(4)	Average length of soil specimen		127		(mm)
(5)	Average length of soil specimen		12.7	= (4)/10	(cm)
(6)	Soil specimen volume		257.4	= (3) x (5)	(cm^3)
(7)	Wet mass of soil specimen		508.0		(g)
(20)	Wet density		1974	= (7) x 1000/(6)	(kg/m^3)
(21)	Wet unit weight		19.36	= (20) x 0.009807	(kN/m^3)
(22)	Dry unit weight		17.68	= (21)/[1 + (19)/100]	(kN/m^3)

	Moisture content	Top		Bottom	
		+ No. 4	- No. 4	+ No. 4	- No. 4
	Dish No.		CL-8		
	Mass of dish + wet soil (g)		360.3		
	Mass of dish + dry soil (g)		341.5		
	Mass of dish (g)		143.8		
	Mass of water (g)		18.8		
	Mass of dry soil (g)		197.7		
(8)	Moisture content + No. 4* (%)				
(9)	Moisture content – No. 4* (%)		9.5		
	Complete the following only if + No. 4 is present:				
(10)	Total wet mass of moisture specimen (g)				
(11)	Mass of wet + No. 4 (g)				
(12)	Mass of wet – No. 4 (g)				
(13)	Mass of dry + No. 4 (g)				
(14)	Mass of dry – No. 4 (g)				
(15)	Mass of dry moisture specimen (+ No. 4) + (– No. 4) (g)				
(16)	Percentage of particle size				
(17)	Percentage of particle size		100		
(18)	Moisture content of total specimen ** (%)		9.5		
(19)	Average moisture content (%)		9.5		

Remarks: Compacted test specimen

Auxiliary Test:
USBR 5300 - 89

* If + No. 4 is not porous, a moisture content (% absorption) of 1.5 percent may be assumed for + No. 4 material only.

** $18 = \frac{(16) \times (8)}{100} + \frac{(17) \times (9)}{100}$

Constants: 0.7854 = $\pi/4$

1000 = Convert g/cm^3 to kg/m^3

0.009807 = Convert kg to kN

GPO 851-058

Figure 1B. – Moisture content and unit weight determination of cylindrical specimens — SI units example.

UNITED STATES DEPARTMENT OF THE INTERIOR
BUREAU OF RECLAMATION

USBR 5372-89

PROCEDURE FOR

DETERMINING UNIT WEIGHT OF CYLINDRICAL TUBE-TYPE SAMPLES

INTRODUCTION

This procedure is under the jurisdiction of the Geotechnical Services Branch, code D-3760, Research and Laboratory Services Division, Denver Office, Denver, Colorado. The procedure is issued under the fixed designation USBR 5372. The number immediately following the designation indicates the year of acceptance or the year of last revision.

1. Scope

1.1 This designation outlines the procedure for determining unit weight of cylindrical soil samples contained within sampling tubes.

1.2 Method A describes the procedure for determining the unit weight of soil contained within a sampling tube from which the ends have been cut off. Method B describes the procedure for determining the unit weight of soil contained within a sampling tube from which the ends have not been cut off.

2. Auxiliary Tests

2.1 Upon receipt of tube-type samples at the Geotechnical Services Branch, Denver Office, they are routinely X-rayed and processed in accordance with USBR 5100 and 5200, respectively. The moisture content must be determined in accordance with USBR 5300 as part of performing this procedure.

3. Applicable Documents

3.1 *USBR Procedures*:

USBR 3900 Standard Definitions of Terms and Symbols Relating to Soil Mechanics
USBR 5100 Performing Radiographic Inspection of Soil or Rock Samples
USBR 5200 Processing Tube-Type Samples
USBR 5300 Determining Moisture Content of Soil and Rock by the Oven Method
USBR 5320 Determining the Specific Gravity of Soils

3.2 *ASTM Standard*:

E 11 Specification for Wire-Cloth Sieves for Testing Purposes

4. Summary of Method

4.1 A cylindrical soil sample within a sampling tube is obtained. The diameter and length of the soil sample are carefully determined and the volume of the sample is calculated. The mass of the sample is determined and the wet unit weight calculated. A representative moisture content of the sample is determined and the dry unit weight is calculated.

5. Significance and Use

5.1 A careful assessment of unit weight is important in earthwork because varying unit weights in a soil mass can correspond to significantly different engineering properties. An increased unit weight generally corresponds to increased strength, reduced permeability, and reduced compressibility of the soil mass.

6. Terminology

6.1 Definitions are in accordance with USBR 3900. Terms of particular significance are:

6.1.1 *Unit Weight* (γ).–Weight per unit volume (ASTM definition).

6.1.2 *Dry Unit Weight* (γ_d).–The weight of solid particles per unit of total volume.

6.1.3 *Wet Unit Weight* (γ_{wet}).–The unit weight of solids plus water per unit volume, irrespective of the degree of saturation.

6.1.4 *Density* (ρ).–Mass per unit volume (ASTM).

7. Apparatus

7.1 *Balances or Scales.*–Typical balances or scales used for this designation are:

Application	*Readable to*	*Approximate capacity*
Moisture content	0.1 g	1000 g
Mass of specimen, in-lb	0.01 lbm	50 lbm
Mass of specimen, SI	1 g	20 kg

7.2 *Drying Oven.*–An oven, thermostatically controlled, preferably of the forced-draft type, and capable of maintaining a uniform temperature of 230±9 °F (110±5 °C) throughout the drying chamber.

7.3 *Vernier or Dial Caliper.*–A scaled vernier or dial caliper graduated to read to 0.001 inch is to be used when inch-pound units are required. A scaled vernier or dial

caliper graduated to read to 0.02 millimeter is to be used when metric units are required.

7.4 *Flexible Metal Printed Tape or Engraved Rule.*–A linear measurement device graduated to read in 1/16- or 0.1-inch (1-mm) increments.

7.5 *Pi Tape.*–A scaled pi (π) tape, 2- to 12-inch outside diameter and readable to 0.001 inch, or a metric pi tape 30 to 200 mm outside diameter and readable to 0.01 mm.

7.6 *Hand-Operated Trimming Device* (for method B).–Device for trimming soil samples contained within an uncut sampling tube (see fig. 1).

7.7 *Light* (method B).–Any light which provides enough light to inspect the ends of soil samples contained within uncut sample tubes.

7.8 *Sieve.*–U.S.A. Standard series No. 4 (4.75 mm) sieve conforming to requirements of ASTM E 11.

8. Precautions

8.1 *Safety Precautions.*–This designation may involve hazardous materials, operations, and equipment. Safety shoes and gloves are to be worn whenever handling tube-type samples.

8.2 *Technical Precautions*:

8.2.1 This procedure is applicable to tube-type undisturbed samples of soil. The tube is assumed to be in complete contact with the soil sample; i.e., no cracks, voids, or other discontinuities existing in the soil sample.

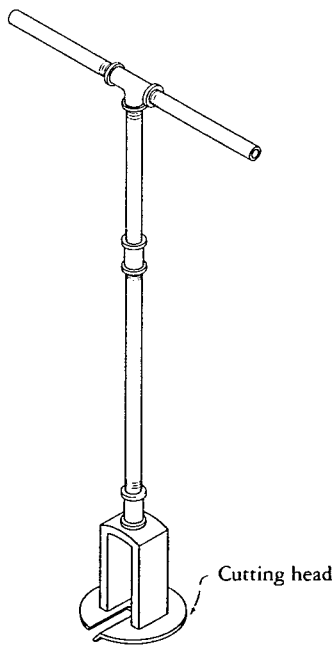

Figure 1. – Hand-operated trimming device (not drawn to scale). The diameter of the cutting head should be about 1/4 inch smaller than the inside diameter of the sample tube.

The radiographs (X-rays) of the soil sample should be reviewed carefully to assure that this assumption is correct.

8.2.2 To determine accurately the unit weight of a soil sample, the sample tube containing the soil must be clean and free of foreign substances such as wax and adhesive tape.

9. Calibration and Standardization

9.1 Verify that equipment is currently calibrated in accordance with the applicable calibration procedure. If the calibration is not current, perform the calibration before using the equipment for this procedure.

10. Conditioning

10.1 The soil samples should be prepared and processed as quickly as possible to minimize unrecorded moisture loss which would result in an erroneous moisture content determination.

11. Procedure — Method A: Soil Samples in Cut Sample Tubes

11.1 All data are to be recorded on the "Moisture Content and Unit Weight Determination of Soil Sample in Cut Sample Tube" form as shown on figure 2A (in-lb units) or 2B (SI units).

11.2 The tube samples are to be processed in accordance with USBR 5200.

11.3 Determine the average moisture content of the soil sample. If the soil sample consists of only minus No. 4 (4.75 mm) sieve-size material, follow the procedure in subparagraph 11.3.1. If the soil sample consists of both plus No. 4 and minus No. 4 sieve-size material, follow the procedure in subparagraph 11.3.2.

11.3.1 For soil samples consisting of only minus No. 4 sieve-size particles, the average moisture content determined is the average of the moisture contents (fig. 2B) obtained from the top and bottom moisture content specimens cut from the ends of the tube sample (fig. 3). Determine the moisture content in accordance with USBR 5300.

11.3.2 For soil samples consisting of both minus No. 4 and plus No. 4 sieve-size particles, average moisture content is determined using the following procedure (fig. 2A):

11.3.2.1 Obtain a moisture content specimen from each cut end portion of the sample tube. A minimum of 150 grams is required for each specimen. Designate one specimen as "top" and one as "bottom" — as appropriate. The moisture content of each specimen is determined using the following procedure:

11.3.2.1.1 Determine and record the total wet mass of the moisture content specimen to the nearest 0.1 gram. Separate the plus No. 4 sieve-size material from the total specimen by screening the material over a No. 4 sieve. Save both portions.

7-2353 (11-86)
Bureau of Reclamation

MOISTURE CONTENT AND UNIT WEIGHT DETERMINATION OF SOIL SAMPLE IN CUT SAMPLE TUBE

Designation USBR 5372-89

SAMPLE NO.	PROJECT	FEATURE
67T-397	Example	Example

SPECIMEN NO.	HOLE NO.	DEPTH
34	DH-24	15.0-20.0 ft.

TESTED BY	DATE	COMPUTED BY	DATE	CHECKED BY	DATE

	Outside diameter of tube	a	6.002	(in)	Tube thickness	a	0.032	(in)
		b	6.001	(in)		b	0.032	(in)
		c	6.002	(in)		c	0.032	(in)
(1)	Average outside diameter of tube		6.002	(in)	(2) Average tube thickness		0.032	(in)
(3)	Two times average tube thickness		= 2 x (2)				0.064	(in)
(4)	Soil sample diameter		= (1) - (3)				5.938	(in)
(5)	Soil sample area		= 0.7854 x (4)^2				27.69	(in^2)
	Length of soil sample	a					21 13/16	(in)
		b					22 9/16	(in)
		c					21 13/16	(in)
(6)	Average length of soil sample						21.9	(in)
(7)	Volume of soil sample		= (5) x (6)				606.4	(in^3)
(8)	Tube factor (mass per length)						0.158	(lbm/in)
(9)	Mass of soil sample and tube						50.37	(lbm)
(10)	Mass of tube		= (6) x (8)				3.46	(lbm)
(11)	Mass of soil sample		= (9) - (10)				46.91	(lbm)
(12)	Wet density		= (11) x 1728/(7)				133.7	(lbm/ft^3)
(13)	Wet unit weight		= (12)***				133.7	(lbf/ft^3)
(26)	Dry unit weight		= (13)/[1 + (25)/100]				115.7	(lbf/ft^3)

	Moisture content	Top		Bottom	
		+ No. 4	- No. 4	+ No. 4	- No. 4
	Dish No.		L-21		40
	Mass of dish + wet soil (g)		386.0		287.6
	Mass of dish + dry soil (g)		345.0		261.6
	Mass of dish (g)		126.6		118.1
	Mass of water (g)		41.0		26.0
	Mass of dry soil (g)		218.4		143.5
(14)	Moisture content + No. 4* (%)	1.5		1.5	
(15)	Moisture content - No. 4 (%)		18.8		18.1
	Complete the following only if + No. 4 is present:				
(16)	Total wet mass of moisture content specimen (g)	329.6		296.3	
(17)	Mass of wet + No. 4 (g)	52.3		40.2	
(18)	Mass of wet - No. 4 (g)		277.3		256.1
(19)	Mass of dry + No. 4 (g)	51.5		39.6	
(20)	Mass of dry - No. 4 (g)		233.4		216.9
(21)	Mass of dry total moisture content specimen (g)	284.9		256.5	
(22)	Percentage of + No. 4	18.1		15.4	
(23)	Percentage of - No. 4		81.9		84.6
(24)	Moisture content total specimen** (%)	15.7		15.5	
(25)	Average moisture content (%)	15.6			

	Tube factor determination	Trial No. 1	Trial No. 2	Trial No. 3
	Mass of tube (lbm)	1.56	1.03	1.31
	Length of tube (in)	9 13/16	6 8/16	8 5/16
	Length of tube (in)	9 12/16	6 7/16	8 5/16
	Length of tube (in)	9 13/16	6 8/16	8 6/16
	Average length of tube (in)	9 13/16	6 8/16	8 5/16
	Tube factor (lbm/in)	0.159	0.158	0.158
(8)	Average tube factor (lbm/in)	0.158		

Remarks:

* If + No. 4 is not porous, a moisture content of 1.5 percent may be assumed for + No. 4 Material only.

** (24) = $\frac{(22) \times (14)}{100} + \frac{(23) \times (15)}{100}$

*** implies 1 lbm = lbf

Auxiliary Tests:
USBR 5200-89
USBR 5300-89

GPO 852-437

Figure 2A. – Moisture content and unit weight determination of soil sample in cut sample tube (in-lb units) — example.

7M-2353 (11-86)
Bureau of Reclamation

MOISTURE CONTENT AND UNIT WEIGHT DETERMINATION OF SOIL SAMPLE IN CUT SAMPLE TUBE

Designation USBR 5372-89

SAMPLE NO.	PROJECT	FEATURE
43S-486	Example	Example

SPECIMEN NO.	HOLE NO.	DEPTH
24	DH-17	5.0-10.0 m

TESTED BY	DATE	COMPUTED BY	DATE	CHECKED BY	DATE

	Outside diameter of tube	a	152.47	(mm)	Tube thickness	a	1.28	(mm)
		b	152.50	(mm)		b	1.30	(mm)
		c	152.43	(mm)		c	1.28	(mm)
(1)	Average outside diameter of tube		152.47	(mm)	(2) Average tube thickness		1.29	(mm)
(3)	Two times average tube thickness		= 2 x (2)				2.58	(mm)
(4)	Soil sample diameter		= [(1) - (3)]/10				14.99	(cm)
(5)	Soil sample area		= 0.7854 x (4)^2				176.48	(cm2)
	Length of soil sample	a					507	(mm)
		b					505	(mm)
		c					506	(mm)
(6)	Average length of soil sample						506	(mm)
(7)	Average length of soil sample		= (6)/10				50.6	(cm)
(8)	Volume of soil sample		= (5) x (7)				8930	(cm3)
(9)	Tube factor (mass per length)						1.64	(g/mm)
(10)	Mass of soil sample and tube						19160	(g)
(11)	Mass of tube		= (6) x (9)				830	(g)
(12)	Mass of soil sample		= (10) - (11)				18330	(g)
(13)	Wet density		= (12) x 1000/(8)				2053	(kg/m3)
(26)	Wet unit weight		= (13) x .009807				20.13	(kN/m3)
(27)	Dry unit weight		= (26)/[1 + (25)/100]				17.37	(kN/m3)

	Moisture content	Top		Bottom	
		+ No. 4	- No. 4	+ No. 4	- No. 4
	Dish No.		59		31
	Mass of dish + wet soil (g)		306.6		260.3
	Mass of dish + dry soil (g)		283.1		243.5
	Mass of dish (g)		146.2		127.9
	Mass of water (g)		23.5		16.8
	Mass of dry soil (g)		136.9		115.6
(14)	Moisture content + No. 4* (%)				
(15)	Moisture content - No. 4 (%)		17.2		14.5
	Complete the following only if + No. 4 is present:				
(16)	Total wet mass of moisture content specimen (g)				
(17)	Mass of wet + No. 4 (g)				
(18)	Mass of wet - No. 4 (g)				
(19)	Mass of dry + No. 4 (g)				
(20)	Mass of dry - No. 4 (g)				
(21)	Mass of dry total moisture content specimen (g)				
(22)	Percentage of + No. 4 (g)				
(23)	Percentage of - No. 4 (g)		100		100
(24)	Moisture content total specimen** (g)	17.2		14.5	
(25)	Average moisture content (g)	15.9			

	Tube factor determination		Trial No. 1	Trial No. 2	Trial No. 3
	Mass of tube section	(g)	166	182	173
	Length of tube section	(mm)	101	110	105
	Length of tube section	(mm)	103	110	104
	Length of tube section	(mm)	102	109	106
	Average length of tube section	(mm)	102	110	105
	Tube factor	(g/mm)	1.63	1.65	1.65
(9)	Average tube factor	(g/mm)	1.64		

Remarks:

* If + No. 4 is not porous, a moisture content of 1.5 percent may be assumed for + No. 4 material only.

** $(24) = \frac{(22) \times (14)}{100} + \frac{(23) \times (15)}{100}$

Auxiliary Tests:
USBR 5200-89
USBR 5300-89

GPO 852-436

Figure 2B. – Moisture content and unit weight determination of soil sample in cut sample tube (SI units) — example.

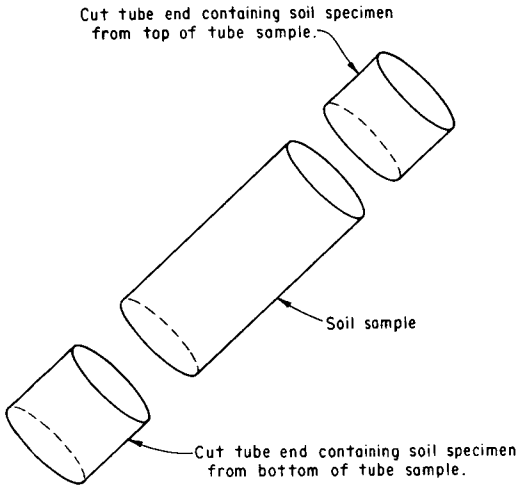

Figure 3. – Sample tube containing the soil sample showing cut tube ends.

11.3.2.1.2 Wash the plus No. 4 portion to remove any minus No. 4 sieve-size material which may be adhering to the coarse-size particles.

11.3.2.1.3 Surface dry the plus No. 4 portion by blotting with a towel.

11.3.2.1.4 Determine and record the mass of the wet plus No. 4 portion to the nearest 0.1 gram.

11.3.2.1.5 Calculate and record the mass of the wet minus No. 4 portion of the specimen to the nearest 0.1 gram.

11.3.2.1.6 Calculate and record the mass of the surface-dry plus No. 4 portion of the specimen to the nearest 0.1 gram.

NOTE 1.–Assume the plus No. 4 material has an absorbed moisture content of 1.5 percent. If the material is porous, moisture content should be determined in accordance with USBR 5300.

11.3.2.1.7 Determine and record the moisture content of the minus No. 4 portion of the specimen in accordance with USBR 5300.

11.3.2.1.8 Calculate and record the mass of the dry minus No. 4 portion of the specimen to the nearest 0.1 gram.

11.3.2.1.9 Calculate and record the mass of the dry total moisture content specimen to the nearest 0.1 gram.

11.3.2.1.10 Calculate and record the percentage (by dry mass) of plus No. 4 material in the total moisture content specimen to the nearest 0.1 percent.

11.3.2.1.11 Calculate and record the percentage (by dry mass) of minus No. 4 material in the total moisture content specimen to the nearest 0.1 percent.

11.3.2.1.12 Calculate and record the moisture content of the total moisture content specimen to the nearest 0.1 percent.

11.3.2.2 Calculate and record the average moisture content of the soil sample to the nearest 0.1 percent by averaging the moisture contents obtained from the "top" and "bottom" moisture content specimens obtained from the ends of the tube sample.

11.4 Determine the volume of the soil sample.

11.4.1 The tube containing the soil sample should be clean and free of any foreign substances such as wax or adhesive tape.

11.4.2 Measure and record the outside diameter of the tube to the nearest 0.001 inch (0.01 mm) at three different locations along the tube using a pi (π) tape. These measurements are to be taken at approximately the one-quarter points along the tube length.

11.4.3 Calculate and record the average outside diameter of the tube to the nearest 0.001 inch (0.01 mm).

11.4.4 Measure and record the tube thickness of one of the end specimens to the nearest 0.001 inch (0.01 mm) at three different locations around the circumference of the tube using a vernier or dial caliper. These measurements are to be taken at approximately the one-third points around the circumference of the tube.

11.4.5 Calculate and record the average tube thickness. Calculate the value equal to twice the average tube thickness and record.

11.4.6 Calculate and record the soil sample diameter to the nearest 0.001 inch (0.01 cm).

11.4.7 Calculate and record the area of the soil sample to the nearest 0.01 in^2 (0.01 cm^2).

11.4.8 Measure and record the length of the soil sample to the nearest 1/16 or 0.1 inch (1 mm) at three different locations on the tube using a flexible metal printed tape or engraved rule. These measurements are to be taken at approximately the one-third points around the circumference of the tube.

11.4.9 Calculate and record the average length of the soil sample to the nearest 0.1 inch (1 mm). For metric units, calculate and record the average length of the soil sample to the nearest 0.1 cm.

11.4.10 Calculate and record the volume of the soil sample to the nearest 0.1 in^3 (1 cm^3).

11.5 Determine the soil sample mass.

11.5.1 Determine and record the mass of the soil sample and tube to the nearest 0.01 lbm (1 g).

11.5.2 Determine the tube factor.

11.5.2.1 Obtain three straight lengths of empty tube sections from three different tube samples. If only one tube is being tested, two tube sections should be cut from it. These sections can be cut from the ends of the tube samples that are not entirely filled with soil. The minimum length of a tube section should be 1 inch (25 mm); if three different tube samples are not available, the tube factor is to be calculated from as many (1 or 2) empty tube sections as can be obtained.

11.5.2.2 The tube sections must be clean and free of any soil, wax, or other material which is not part of the tube. Burrs, from cutting the tube, must be removed.

11.5.2.3 Determine and record the mass of each tube section to the nearest 0.01 lbm (1 g).

11.5.2.4 Measure and record the length of each tube section to the nearest 1/16- or 0.1-inch (1 mm) at three different locations on each tube section.

11.5.2.5 Calculate and record the average length of each tube section.

11.5.2.6 Calculate and record the tube factor for each tube section to the nearest 0.001 lbm/in (0.01 g/mm).

11.5.2.7 If the tube factors calculated are not within 10 percent of each other, a tube factor must be obtained for each tube sample.

11.5.2.8 Calculate and record the average tube factor to the nearest 0.001 lbm/in (0.01 g/mm).

11.5.3 Calculate and record the mass of the tube containing the soil sample to the nearest 0.01 lbm (1 g).

11.5.4 Calculate and record the mass of the soil sample to the nearest 0.01 lbm (1 g).

11.6 Calculate and record the wet density of the soil sample to the nearest 0.1 lbm/ft^3 (1 kg/m^3).

11.6.1 In the procedure, wet density is converted to wet unit weight by changing from lbm/ft^3 to lbf/ft^3. (Assume 1 lbm = 1 lbf.)

11.6.2 For SI units, calculate the wet unit weight and record to the nearest 0.01 kN/m^3.

11.7 Calculate and record the dry unit weight to the nearest 0.1 lbf/ft^3 (0.01 kN/m^3).

12. Procedure — Method B: Uniform Cylindrical Samples in Uncut Tubes

12.1 All data are to be recorded on the "Moisture Content and Unit Weight Determination of Soil Sample in Uncut Sample Tube" as shown on figure 4A (in-lb units) or on 4B (SI units).

12.2 The tube containing the soil sample should be clean and free of any foreign substances such as wax or adhesive tape.

12.3 Determine the area of the soil sample.

12.3.1 Measure and record the inside diameter of each end (top and bottom) of the sampling tube to the nearest 0.001 inch (0.02 mm). The measurements should be made at three different locations around the circumference of the tube. The measurements should be made using a vernier or dial caliper. Calculate and record the average inside diameter of the tube.

12.3.1.1 For the SI system, change the average inside diameter of the tube from millimeters to centimeters and record.

12.3.2 Calculate and record the area of the soil sample using the average inside diameter of the tube as the average diameter of the sample to the nearest 0.001 in^2 (0.01 cm^2).

12.4 Determine the length of the soil sample within the sample tube.

12.4.1 Using the hand-operated trimming device (fig. 1), trim the sample ends within the tube to make them perpendicular to the inside walls of the tube. Trim both ends of the sample. Care should be excercised to trim only enough material to square the ends. Next, inspect the sample ends to make sure they are clean, square, and free of large voids; an electric light may be required (fig. 5).

12.4.2 Measure and record the distance from the end of the soil sample to the end of the sample tube to the nearest 0.1 inch (1 mm) using a flexible metal tape or engraved rule. Make this measurement three times for each end. These measurements are to be made at approximately the one-third points around the circumference of the tube.

12.4.3 Calculate and record the average distance from each end.

12.4.4 Measure and record the total length of the sample tube to the nearest 0.1 inch (1 mm) at three different locations around the circumference of the tube using a flexible metal printed tape or engraved rule.

12.4.5 Calculate and record the average length of the sample tube.

12.4.6 Calculate and record the average length of the soil sample within the sample tube to the nearest 0.1 inch (0.1 cm).

12.5 Calculate and record the volume of the soil sample to the nearest 0.1 in^3 (1 cm^3).

12.6 Determine and record the mass of the sample tube and soil to the nearest 0.1 lbm (1 g). The exterior and exposed interior portions of the sample tube should be clean and free of any foreign matter such as wax, masking tape, etc.

12.7 Determine the moisture content of the soil sample. If the sample consists of only minus No. 4 sieve-size material, follow the procedures in subparagraph 12.7.1. If the soil sample consists of both plus No. 4 and minus No. 4 sieve-size material, follow the procedure in subparagraph 12.7.2.

12.7.1 For soil samples consisting of only minus No. 4 sieve-size particles, the average moisture content is the average of the moisture contents obtained from the top and bottom moisture content specimens trimmed from the ends of the tube sample (fig. 5). Determine the moisture content in accordance with USBR 5300.

12.7.2 For soil samples consisting of both minus No. 4 and plus No. 4 sieve-size particles, the average moisture content should be determined using the following procedure:

12.7.2.1 Obtain a moisture content specimen from each end of the sample tube. A minimum of 150 grams is required for each specimen. Designate one specimen as "top" and one as "bottom" — as appropriate. Determine the moisture content of each specimen using the following procedure:

12.7.2.1.1 Determine and record the total wet mass of the moisture content specimen to the nearest 0.1 gram. Separate the plus No. 4 sieve-size material from the moisture specimen by screening the material over a No. 4 sieve. Save both portions.

12.7.2.1.2 Wash the plus No. 4 portion to remove any minus No. 4 sieve-size material which may be adhering to the coarse-size particles.

12.7.2.1.3 Surface dry the plus No. 4 portion by blotting with a towel.

12.7.2.1.4 Determine and record the mass of the wet plus No. 4 to the nearest 0.1 gram.

12.7.2.1.5 Calculate and record the mass of the wet minus No. 4 portion of the specimen to the nearest 0.1 gram.

12.7.2.1.6 Calculate and record the surface-dry mass of the plus No. 4 portion of the specimen to the nearest 0.1 gram.

7-2354 (11-86)
Bureau of Reclamation

MOISTURE CONTENT AND UNIT WEIGHT DETERMINATION OF SOIL SAMPLE IN UNCUT SAMPLE TUBE

Designation USBR 5372-89

SAMPLE NO.	PROJECT	FEATURE
21W-483	Example	Example

SPECIMEN NO.	HOLE NO.	DEPTH
10	DH-337	20.0-25.0 ft.

TESTED BY	DATE	COMPUTED BY	DATE	CHECKED BY	DATE

	Inside diameter of tube (top)	a	3.003	(in)	Inside diameter of tube (bottom)	a	3.010	(in)
		b	3.005	(in)		b	3.008	(in)
		c	3.004	(in)		c	3.009	(in)
(1)	Average inside tube diameter						3.007	(in)
(2)	Soil sample area		= 0.7854 x (1)2				7.102	(in2)
	Distance from end of tube to soil (top)	a	4.2	(in)	Distance from end of tube to soil (bottom)	a	6.1	(in)
		b	4.3	(in)		b	6.2	(in)
		c	4.2	(in)		c	6.1	(in)
(3)	Average distance (top)		4.2	(in)	(4) Average distance (bottom)		6.1	(in)
	Length of sample tube					a	36.1	(in)
						b	36.1	(in)
						c	35.8	(in)
(5)	Average length of sample tube						36.0	(in)
(6)	Average length of soil sample		= (5) - (4) - (3)				25.7	(in)
(7)	Volume of soil sample		= (2) x (6)				182.5	(in3)
(8)	Mass of soil sample and tube						21.7	(lbm)
(9)	Tube factor (mass per length)						0.219	(lbm/in)
(10)	Mass of tube		= (5) x (9)				7.9	(lbm)
(11)	Mass of soil sample		= (8) - (10)				13.80	(lbm)
(12)	Wet density		= (11) x 1728/(7)				130.7	(lbm/ft3)
(13)	Wet unit weight		= (12)***				130.7	(lbf/ft3)
(26)	Dry unit weight		= (13)/[1 + (25)/100]				114.0	(lbf/ft3)

	Moisture content	Top		Bottom	
		+ No. 4	- No. 4	+ No. 4	- No. 4
	Dish No.		136		147
	Mass of dish + wet soil (g)		178.5		201.7
	Mass of dish + dry soil (g)		165.4		188.0
	Mass of dish (g)		72.1		98.1
	Mass of water (g)		13.1		13.7
	Mass of dry soil (g)		93.3		89.9
(14)	Moisture content + No. 4* (%)				
(15)	Moisture content - No. 4 (%)		14.0		15.2
	Complete the following only if + No. 4 is present:				
(16)	Total wet mass of moisture content specimen (g)				
(17)	Mass of wet + No. 4 (g)				
(18)	Mass of wet - No. 4 (g)				
(19)	Mass of dry + No. 4 (g)				
(20)	Mass of dry - No. 4 (g)				
(21)	Mass of dry total moisture content specimen (g)				
(22)	Percentage of + No. 4				
(23)	Percentage of - No. 4		100		100
(24)	Moisture content total specimen** (%)		14.0		15.2
(25)	Average moisture content (%)		14.6		

	Tube factor determination	Trial No. 1	2	3
	Mass of tube (lbm)	7.9		
	Length of tube (in)	36.1		
	Length of tube (in)	36.1		
	Length of tube (in)	35.8		
	Average length of tube (in)	36.0		
	Tube factor (lbm/in)	0.219		
(9)	Average tube factor (lbm/in)	0.219		

Remarks: Tube factor determined using entire tube after the sample was extruded.

* If + No. 4 is not porous, a moisture content of 1.5 percent may be assumed for + No. 4 Material only.

** $(24) = \frac{(22) \times (14)}{100} + \frac{(23) \times (15)}{100}$

*** implies 1 lbm = lbf

Auxiliary Tests:
USBR 5200-89
USBR 5300-89

GPO 852-439

Figure 4A. – Moisture content and unit weight determination of soil sample in uncut sample tube (in-lb units) — example.

7M-2354 (11-86)
Bureau of Reclamation

MOISTURE CONTENT AND UNIT WEIGHT DETERMINATION OF SOIL SAMPLE IN UNCUT SAMPLE TUBE

Designation USBR 5372-89

SAMPLE NO.	PROJECT	FEATURE
35T-186	Example	Example

SPECIMEN NO.	HOLE NO.	DEPTH
28	DH-176	5.0-10.0 m

TESTED BY	DATE	COMPUTED BY	DATE	CHECKED BY	DATE

	Inside diameter of tube (top)	a	75.62	(mm)	Inside diameter of tube (bottom)	a	75.90	(mm)
		b	75.58	(mm)		b	75.88	(mm)
		c	75.68	(mm)		c	75.86	(mm)
(1)	Average inside diameter of tube						75.75	(mm)
(2)	Average inside diameter of tube		= (1)/10				7.58	(cm)
(3)	Soil sample area		= 0.7854 x (2)^2				45.13	(cm^2)
	Distance from end of tube to soil (top)	a	137	(mm)	Distance from end of tube to soil (bottom)	a	126	(mm)
		b	138	(mm)		b	125	(mm)
		c	137	(mm)		c	123	(mm)
(4)	Average distance (top)		137	(mm)	(5) Average distance (bottom)		125	(mm)
	Length of sample tube	a	910	(mm)				
		b	912	(mm)				
		c	913	(mm)				
(6)	Average length of sample tube						912	(mm)
(7)	Average length of soil sample		= (6) - (5) - (4)				650	(mm)
(8)	Average length of soil sample		= (7)/10				65.0	(cm)
(9)	Volume of soil sample		= (3) x (8)				2933	(cm^3)
(10)	Mass of soil sample and tube						7376	(g)
(11)	Tube factor (mass per length)						1.23	(g/mm)
(12)	Mass of tube		= (6) x (11)				1122	(g)
(13)	Mass of soil sample		= (10) - (12)				6254	(g)
(13a)	Wet density		= 1000 x (13)/(9)				2132	(kg/m^3)
(13b)	Wet unit weight		= (13a) x .009807				20.91	(kN/m^3)
(26)	Dry unit weight		= (13b)/[1 + (25)/100]				18.39	(kN/m^3)

	Moisture content	Top		Bottom	
		+ No. 4	- No. 4	+ No. 4	- No. 4
	Dish No.		136		147
	Mass of dish + wet soil (g)		178.6		201.7
	Mass of dish + dry soil (g)		165.4		188.0
	Mass of dish (g)		72.1		98.1
	Mass of water (g)		13.2		13.7
	Mass of dry soil (g)		93.3		89.9
(14)	Moisture content + No. 4* (%)	1.5		1.5	
(15)	Moisture content - No. 4 (%)		14.1		15.2
	Complete the following only if + No. 4 is present:				
(16)	Total wet mass of moisture content specimen (g)	206.1		302.7	
(17)	Mass of wet + No. 4 (g)	20.7		10.6	
(18)	Mass of wet - No. 4 (g)		185.4		292.1
(19)	Mass of dry + No. 4 (g)	20.4		10.4	
(20)	Mass of dry - No. 4 (g)		162.3		253.6
(21)	Mass of dry total moisture content specimen (g)	182.7		264.0	
(22)	Percentage of + No. 4	11.2		3.9	
(23)	Percentage of - No. 4		88.8		96.1
(24)	Moisture content total specimen** (%)	12.7		14.7	
(25)	Average moisture content (%)	13.7			

	Tube factor determination	Trial No. 1	Trial No. 2	Trial No. 3
	Mass of tube (g)	1130	1107	1127
	Length of tube (mm)	911	915	910
	Length of tube (mm)	912	915	908
	Length of tube (mm)	911	916	909
	Average length of tube (mm)	911	915	909
	Tube factor (g/mm)	1.24	1.21	1.24
(11)	Average tube factor (g/mm)	1.23		

Remarks:

* If + No. 4 is not porous, a moisture content of 1.5 percent may be assumed for + No. 4 Material only.

** $(24) = \frac{(22) \times (14)}{100} + \frac{(23) \times (15)}{100}$

Auxiliary Tests:
USBR 5200-89
USBR 5300-89

GPO 852-440

Figure 4B. – Moisture content and unit weight determination of soil sample in uncut sample tube (SI units) — example.

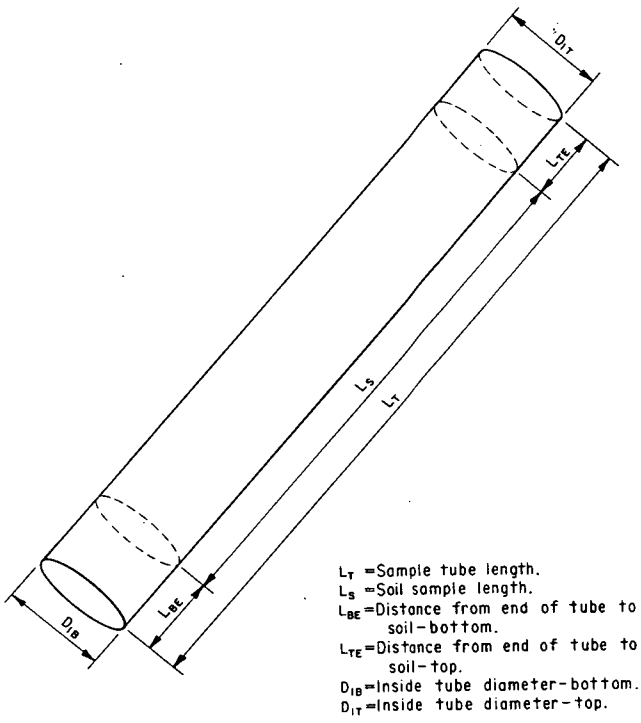

Figure 5. – Uncut sample tube showing trimmed soil sample within sample tube.

NOTE 2.–Assume the plus No. 4 material has an absorbed moisture content of 1.5 percent. If the material is porous, moisture content should be determined in accordance with USBR 5300.

12.7.2.1.7 Determine and record the moisture content of the minus No. 4 portion of the specimen in accordance with USBR 5300.

12.7.2.1.8 Calculate and record the dry mass of the minus No. 4 portion of the specimen to the nearest 0.1 gram.

12.7.2.1.9 Calculate and record the dry mass of the total moisture content specimen to the nearest 0.1 gram.

12.7.2.1.10 Calculate and record the percentage by mass of plus No. 4 material in the total specimen to the nearest 0.1 percent.

12.7.2.1.11 Calculate and record the percentage by mass of minus No. 4 material in the total specimen to the nearest 0.1 percent.

12.7.2.1.12 Calculate and record the moisture content of the total specimen to the nearest 0.1 percent.

12.7.2.2 Calculate and record the average moisture content of the soil sample to the nearest 0.1 percent by averaging the moisture contents obtained from the "top" and "bottom" moisture content specimens obtained from the ends of the tube sample.

12.8 Repeat the procedure described in subparagraphs 12.3 through 12.7 for each tube sample that is to be tested.

12.9 Determine the mass of the sample tube.

12.9.1 When all sample tubes containing soil have been processed, a geotechnical engineer should review test results to determine which, if any, samples will not be used for undisturbed testing. The engineer will be interested in sample length, soil type, and available radiographs (X-ray). If possible, the engineer should select two or three sample tubes to be used to determine an average tube mass per unit length; however, if only one sample tube is available, then only the one tube can be used.

12.9.2 Each of the sample tubes containing soil samples selected by the engineer should be completely cleaned of any soil, wax, or other foreign substances. The soil which is removed should be retained.

12.9.3 Determine and record the mass of each empty, clean sample tube to the nearest 0.1 lbm (1 g).

12.9.4 Measure and record the length of each empty sample tube to the nearest 0.1 inch (1 mm) at three different locations around the circumference of the tube using a flexible metal printed tape or engraved rule.

12.9.5 Calculate and record the average length of each empty sample tube.

12.9.6 Calculate and record the tube factor for each sample tube to the nearest 0.001 lbm/in (0.01 g/mm) by dividing the empty sample tube mass by the average sample tube length.

12.9.6.1 Calculate and record the average tube factor to the nearest 0.001 lbm/in (0.01 g/mm).

12.9.7 Calculate the mass of the sample tube containing the soil sample to the nearest 0.1 lbm (1 g) by multiplying the average length of sample tube (as determined in subpar. 12.4.5) by the average tube factor.

12.10 Calculate and record the mass of the soil sample contained within each sample tube to the nearest 0.01 lbm (1 g).

12.11 Calculate and record the wet density of the soil to the nearest 0.1 lbm/ft³ (1 kg/m³).

12.11.1 In the procedure, wet density is converted to wet unit weight by changing from lbm/ft³ to lbf/ft³. (Assume 1 lbm = 1 lbf.)

12.11.2 For the SI system, calculate and record the wet unit weight to the nearest 0.01 kN/m³.

12.12 Calculate and record the dry unit weight to the nearest 0.1 lbf/ft³ (0.01 kN/m³).

13. Calculations

NOTE 3.–Numbers within parentheses correspond to line numbers on data forms.

13.1 *Moisture Content Determination.*–The following calculations are used in method A or B for determining the moisture content of a soil specimen containing plus No. 4 sieve-size material.

13.1.1 Calculate the mass of wet minus No. 4 sieve-size portion of the moisture content specimen.

$$(18) = (16) - (17) \quad (1)$$

where:
(18) = mass of wet minus No. 4 material, g
(17) = mass of wet plus No. 4 material, g
(16) = total wet mass of moisture content specimen, g

13.1.2 Calculate the mass of the dry plus No. 4 portion of the moisture content specimen.

$$(19) = \frac{(17)}{1 + \frac{(14)}{100}} \quad (2)$$

where:
(19) = mass of dry plus No. 4 material, g
(14) = moisture content of plus No. 4 material, %
100 = convert from percent to decimal

13.1.3 Calculate the mass of the dry minus No. 4 portion of the moisture content specimen.

$$(20) = \frac{(18)}{1 + \frac{(15)}{100}} \quad (3)$$

where:
(20) = mass of dry minus No. 4 material, g
(15) = moisture content of minus No. 4 material, %
100 = convert from percent to decimal

13.1.4 Calculate the mass of the dry total moisture content specimen.

$$(21) = (19) + (20) \quad (4)$$

where (21) equals mass of the dry total moisture content specimen, g.

13.1.5 Calculate the percentage (by dry mass) of plus No. 4 material in the total moisture content specimen.

$$(22) = \frac{(19)}{(21)} \quad (5)$$

where (22) equals percentage of plus No. 4 material in moisture content specimen, %.

13.1.6 Calculate the percentage (by dry mass) of minus No. 4 material in the total moisture content specimen.

$$(23) = 100 - (22) \quad (6)$$

where (23) equals percentage of minus No. 4 material in the moisture content specimen, %.

13.1.7 Calculate the moisture content of the total moisture content specimen (top or bottom).

$$(24) = \frac{(22) \times (14)}{100} + \frac{(23) \times (15)}{100} \quad (7)$$

where (24) equals moisture content of total moisture content specimen (top or bottom), %.

13.1.8 Calculate the average moisture content of the soil sample:

$$(25) = \frac{(24)_{top} + (24)_{bottom}}{2} \quad (8)$$

where (25) equals average moisture content of soil sample, %.

13.2 *Method A — Soil Sample in a Cut Sample Tube* (in-lb units, fig. 2A):

13.2.1 Calculate the soil sample diameter.

$$(4) = (1) - (3) \quad (9)$$

where:
(4) = soil sample diameter, in
(3) = 2 × (2), in
(2) = average tube thickness, in
(1) = average outside diameter of tube, in

13.2.2 Calculate the area of the soil sample.

$$(5) = 0.7854 \times (4)^2 \quad (10)$$

where:
(5) = area of soil sample, in^2
0.7854 = $\pi/4$

13.2.3 Calculate the volume of the soil sample:

$$(7) = (5) \times (6) \quad (11)$$

where:
(7) = volume of soil sample, in^3
(6) = average length of soil sample, in

13.2.4 Calculate the mass of the tube.

13.2.4.1 First, calculate the tube factor.

$$\text{Tube factor} = \frac{\text{mass of tube section, lbm}}{\text{average length of tube section, in}} \quad (12)$$

13.2.4.2 Next, calculate the mass of the tube.

$$(10) = (6) \times (8) \quad (13)$$

where:
(10) = mass of tube, lbm
(8) = average tube factor, lbm/in

13.2.5 Calculate the mass of the soil sample.

$$(11) = (9) - (10) \quad (14)$$

where:
(11) = mass of soil sample, lbm
(9) = mass of soil sample and tube, lbm

13.2.6 Calculate the wet density of the soil sample.

$$(12) = 1{,}728 \times \frac{(11)}{(7)} \quad (15)$$

where:
(12) = wet density, lbm/ft^3
1,728 = change in^3 to ft^3

13.2.6.1 In the procedure, wet density is converted to wet unit weight by changing from lbm/ft^3 to lbf/ft^3. (Assume 1 lbm = 1 lbf.)

13.2.7 Calculate the dry unit weight of the soil sample.

$$(26) = \frac{(13)}{1 + \frac{(25)}{100}} \quad (16)$$

where:
(26) = dry unit weight, lbf/ft³
(13) = wet unit weight, lbf/ft³
(25) = average moisture content of soil sample, %
100 = convert from percent to decimal

13.3 *Method A — Soil Sample in a Cut Sample Tube* (SI units, fig. 2B):

13.3.1 Calculate the soil sample diameter.

$$(4) = \frac{(1) - (3)}{10} \quad (17)$$

where:
(4) = soil sample diameter, cm
(3) = 2 × (2), mm
(2) = average tube thickness, mm
(1) = average outside diameter of tube, mm
10 = change millimeters to centimeters

13.3.2 Calculate the area of the soil sample.

$$(5) = 0.7854 \times (4)^2 \quad (18)$$

where:
(5) = area of soil sample, cm²
0.7854 = $\pi/4$

13.3.3 Calculate the average length of the soil sample.

$$(7) = \frac{(6)}{10} \quad (19)$$

where:
(7) = average length of soil sample, cm
(6) = average length of soil sample, mm
10 = change millimeters to centimeters

13.3.4 Calculate the volume of the soil sample.

$$(8) = (5) \times (7) \quad (20)$$

where (8) equals volume of soil sample, cm³.

13.3.5 Calculate the mass of the tube.

13.3.5.1 First, calculate the tube factor.

$$\text{Tube factor} = \frac{\text{mass of tube section, g}}{\text{average length of tube section, mm}} \quad (21)$$

13.3.5.2 Next, calculate the mass of the tube.

$$(11) = (6) \times (9) \quad (22)$$

where:
(11) = mass of tube, g
(9) = average tube factor, g/mm

13.3.6 Calculate the mass of the soil sample.

$$(12) = (10) - (11) \quad (23)$$

where:
(12) = mass of soil sample, g
(10) = mass of soil sample and tube, g

13.3.7 Calculate the wet density.

$$(13) = 1000 \times \frac{(12)}{(8)} \quad (24)$$

where:
(13) = wet density, kg/m³
1000 = change g/cm³ to kg/m³

13.3.8 Calculate the wet unit weight.

$$(26) = 0.009\,807 \times (13) \quad (25)$$

where:
(26) = wet unit weight, kN/m³
0.009 807 = 9.807/1000
9.807 = acceleration of gravity to convert kg to N
1000 = change N to kN

13.3.9 Calculate the dry unit weight of the soil sample.

$$(27) = \frac{(26)}{1 + \frac{(25)}{100}} \quad (26)$$

where:
(27) = dry unit weight, kN/m³
(25) = average moisture content, %
100 = convert from percent to decimal

13.4 *Method B — Uniform Cylindrical Samples in Uncut Sample Tubes* (in-lb units, fig. 4A):

13.4.1 Calculate the area of the soil sample.

$$(2) = 0.7854 \times (1)^2 \quad (27)$$

where:
(1) = average inside tube diameter, in
(2) = soil sample area, in²
0.7854 = $\pi/4$

13.4.2 Calculate the average length of the soil sample.

$$(6) = (5) - (4) - (3) \quad (28)$$

where:
(3) = average distance from top of tube to soil, in
(4) = average distance from bottom of tube to soil, in
(5) = average length of sample tube, in
(6) = average length of soil sample, in

13.4.3 Calculate the volume of the soil sample.

$$(7) = (2) \times (6) \quad (29)$$

where (7) equals volume of soil sample, in³.

13.4.4 Calculate the mass of the tube.

13.4.4.1 First, calculate the tube factor.

$$\text{Tube factor} = \frac{\text{mass of tube section, lbm}}{\text{average length of tube section, in}} \quad (30)$$

13.4.4.2 Next, calculate the mass of the tube.

$$(10) = (5) \times (9) \quad (31)$$

where:
(10) = mass of tube, lbm
(9) = average tube factor, lbm/in

13.4.5 Calculate the mass of soil sample contained within the sample tube.

$$(11) = (8) - (10) \quad (32)$$

where:
(11) = mass of soil sample, lbm
(10) = mass of tube, lbm
(8) = mass of soil sample and tube, lbm

13.4.6 Calculate the wet density of the soil sample.

$$(12) = 1{,}728 \times \frac{(11)}{(7)} \quad (33)$$

where:
(12) = wet density of the soil sample, lbm/ft³
1,728 = change in³ to ft³

13.4.6.1 In the procedure, wet density is converted to wet unit weight by changing from lbm/ft³ to lbf/ft³. (Assume 1 lbm = 1 lbf.)

13.4.7 Calculate the dry unit weight of the soil sample.

$$(26) = \frac{(13)}{1 + \frac{(25)}{100}} \quad (34)$$

where:
(26) = dry unit weight of the soil sample, lbf/ft³
(13) = wet unit weight of the soil sample, lbf/ft³
(25) = average moisture content of soil sample, %

13.5 *Method B — Uniform Cylindrical Samples in Uncut Sample Tubes* (SI units, fig. 4B):

13.5.1 Calculate the average inside diameter of the tube.

$$(2) = \frac{(1)}{10} \quad (35)$$

where:
(1) = average inside diameter of tube, mm
(2) = average inside diameter of tube, cm
10 = change millimeters to centimeters

13.5.2 Calculate the area of the soil sample.

$$(3) = 0.7854 \times (2)^2 \quad (36)$$

where:
(2) = average inside diameter of tube in centimeters, cm
(3) = soil sample area, cm²
0.7854 = $\pi/4$

13.5.3 Calculate the length of soil sample.

$$(7) = (6) - (5) - (4) \quad (37)$$

where:
(4) = average distance from top of tube to soil, mm
(5) = average distance from bottom of tube to soil, mm
(6) = average length of sample tube, mm
(7) = average length of soil sample, mm

13.5.4 Calculate the average length of the soil sample.

$$(8) = \frac{(7)}{10} \quad (38)$$

where:
(8) = average length of soil sample, cm
10 = change millimeters to centimeters

13.5.5 Calculate the volume of the soil sample.

$$(9) = (3) \times (8) \quad (39)$$

where:
(9) = volume of soil sample, cm³
(3) = soil sample area, cm²

13.5.6 Calculate the mass of the tube.

13.5.6.1 First, calculate the tube factor.

$$\text{Tube factor} = \frac{\text{mass of tube section, } g}{\text{average length of tube section, mm}} \quad (40)$$

13.5.6.2 Next, calculate the mass of the tube.

$$(12) = (6) \times (11) \quad (41)$$

where:
(12) = mass of tube, g
(11) = average tube factor, g/mm

13.5.7 Calculate the mass of soil sample contained within the sample tube.

$$(13) = (10) - (12) \quad (42)$$

where:
(13) = mass of soil sample, g
(12) = mass of tube, g
(10) = mass of soil sample and tube, g

13.5.8 Calculate the wet density of the soil sample.

$$(13a) = 1000 \times \frac{(13)}{(9)} \quad (43)$$

where:
(13a) = wet density of the soil sample, kg/m³
1000 = change g/cm³ to kg/m³

13.5.9 Calculate the wet unit weight of the soil sample.

$$(13b) = 0.009\,807 \times 13a \quad (44)$$

where:
(13b) = wet unit weight, kN/m³
0.009 807 = 9.807/1000
9.807 = acceleration of gravity to convert kg to N
1000 = change N to kN

13.5.10 Calculate the dry unit weight of the soil sample.

$$(26) = \frac{(13b)}{1 + \frac{(25)}{100}} \qquad (45)$$

where:

(26) = dry unit weight, kN/m^3
(25) = average moisture content of the soil sample, %

14. Report

14.1 The report for method A is to consist of a completed and checked "Moisture Content and Unit Weight Determination of Soil Sample in Cut Sample Tube" (fig. 2A or 2B).

14.2 The report for method B is to consist of a completed and checked "Moisture Content and Unit Weight Determination of Soil Sample in Uncut Sample Tube" (fig. 4A or 4B).

14.3 All calculations are to show a checkmark.

UNITED STATES DEPARTMENT OF THE INTERIOR
BUREAU OF RECLAMATION

USBR 5375-89

PROCEDURE FOR

DETERMINING DRY UNIT WEIGHT OF IRREGULARLY SHAPED SOIL SPECIMENS

INTRODUCTION

This procedure is under the jurisdiction of the Geotechnical Services Branch, code D-3760, Research and Laboratory Services Division, Denver Office, Denver, Colorado. The procedure is issued under the fixed designation USBR 5375. The number immediately following the designation indicates the year of acceptance or the year of last revision.

1. Scope

1.1 This designation outlines the procedure for determining the dry unit weight of an irregularly shaped soil specimen.

2. Auxiliary Tests

2.1 The moisture content must be determined in accordance with USBR 5300 as part of performing this procedure.

3. Applicable Documents

3.1 *USBR Procedures*:
USBR 1012 Calibrating Balances or Scales
USBR 1020 Calibrating Ovens
USBR 3900 Standard Definitions of Terms and Symbols Relating to Soil Mechanics
USBR 5300 Determining Moisture Content of Soil and Rock by the Oven Method

4. Summary of Method

4.1 After the irregularly shaped specimen is coated with wax, the mass in air and the mass when suspended in water are obtained. The volume and unit weight of the specimen are calculated.

5. Significance and Use

5.1 The dry unit weight of a soil mass is an important consideration as it can significantly affect engineering properties. Increasing the dry unit weight of soil usually increases the shear strength, and reduces the permeability and compressibility of a soil mass.

6. Terminology

6.1 Definitions are in accordance with USBR 3900. Terms of particular significance are:

6.1.1 *Unit Weight* (γ).–Weight per unit volume (ASTM definition).

6.1.2 *Dry Unit Weight* (γ_d).–The weight of solid particles per unit of total volume.

6.1.3 *Wet Unit Weight* (γ_{wet}).–The unit weight of solids plus water per unit volume, irrespective of the degree of saturation.

6.1.4 *Density* (ρ).–Mass per unit volume (ASTM).

7. Apparatus

7.1 *Balance or Scale.*–A typical balance or scale used for this designation must be readable to 0.01 g and have a capacity of about 1000 g.

7.2 *Wire Basket.*–A brass wire (No. 6 sieve or finer) container large enough to hold approximately 200 grams of material.

7.3 *Suspension Wire.*–A wire of sufficient strength and appropriate length to suspend the basket and specimen in the water container without touching the bottom.

7.4 *Water Container.*–A water container large enough to allow submersion of the basket and specimen without touching the container sides or bottom.

7.5 *Drying Oven.*–An oven, thermostatically controlled, preferably of the forced-draft type, and capable of maintaining a uniform temperature of 230±9 °F (110±5 °C) throughout the drying chamber.

7.6 *Wax.*–Paraffin type having a density of 0.89 g/cm^3 or microcrystalline orange having a density of 0.91 g/cm^3.

7.7 *Brush.*–Paint brush, about 5 inches (130 mm) wide.

8. Reagents and Materials

8.1 Tapwater that is free of acids, alkalies, or oils, and suitable for drinking, should be used for performing the procedure.

9. Precautions

9.1 *Safety Precautions.*–This designation may involve hazardous materials, operations, and equipment.

9.2 *Technical Precautions*:

9.2.1 The wax used to coat the soil specimen should be sufficiently warm to flow when brushed on the specimen, yet it should not be so hot that it penetrates the pores

of the soil. If hot wax comes in contact with a moist soil specimen, it may cause the water to vaporize and form air bubbles beneath the wax.

9.2.2 When determining the submerged mass of the wax-coated specimen, a number of precautions should be carefully noted:

- Care should be taken to ensure that the waxed specimen is fully submerged in water.
- The basket holding the specimen should not touch the sides or bottom of the water container.
- Care should be taken to eliminate all entrapped air from the soil specimen and the basket before the mass in water is determined.
- The basket with specimen must be submerged to the same depth as that used when the submerged mass of the basket only was determined.
- The same balance or scale is to be used for making all mass determinations.

10. Calibration and Standardization

10.1 Verify that equipment is currently calibrated in accordance with the applicable calibration procedures. If the calibration is not current, perform the calibration before using the equipment for this procedure.
USBR 1012 Calibrating Balances or Scales
USBR 1020 Calibrating Ovens

11. Conditioning

11.1 The specimen used for the moisture content determination should be processed as quickly as possible to minimize unrecorded moisture loss which would result in an erroneous moisture content and dry unit weight of the test specimen.

12. Procedure

12.1 All data are to be recorded to the nearest 0.01 gram on the "Unit Weight Determination (Suspended Mass in Air and Water Method)" form as shown on figure 1.

12.2 Determine the mass of the basket plus suspension wire in air. Record the mass as the mass of basket in air.

12.3 Select a test specimen from the sample for which the dry unit weight is required.

12.4 Carefully trim rough or sharp edges from the specimen.

12.5 Place the specimen into the basket (include suspension wire) and determine the mass in air. Record the value as the mass of basket + wet specimen in air.

12.6 Carefully remove the specimen from the basket.

12.7 Cover the specimen with a thin coat of melted wax by using a paint brush or by dipping the specimen in the container of melted wax. (See subpar. 9.2.1 for precautions regarding wax temperature.)

12.8 Allow sufficient time for the first coat of wax to harden; and then apply a second coat.

12.9 Place the wax-coated specimen into the wire basket (include suspension wire). Determine the mass and record the value as the mass of basket + wet specimen + wax in air.

12.10 Carefully remove the wax-coated specimen from the basket.

NOTE 1.–The specific gravity values used in this procedure (0.89 for paraffin and 0.91 for microcrystalline orange) are manufacturer specified values. Actual values may be slightly different. Also, this procedure does not require an adjustment to the density of water for temperature variations. If a particular application requires greater precision, the water temperature must be measured and the water density adjusted accordingly. Also, the wax specific gravity must be accurately determined. Unless techniques are used to provided greater precision, the dry density and unit weight values determined should be rounded to three significant digits.

12.11 With the suspension wire attached to the underside of the balance or scale, submerge the basket in the water container as shown on figure 2.

12.12 Determine the mass of the empty basket plus suspension wire submerged and suspended in water.

12.13 Record the mass as the mass of basket in water.

12.14 Remove the basket from the water and carefully place the wax-coated specimen into the basket.

12.15 Lower the basket and wax-coated specimen into the water. Be sure to use the same suspension wire as that used in subparagraph 12.11.

12.16 Determine and record as the mass of basket + wet specimen + wax in water.

12.17 Determine and record the moisture content of the specimen in accordance with USBR 5300.

NOTE 2.–For determining the moisture content, a portion of moist soil may be obtained by using excess cuttings from the specimen during the trimming operation or using the entire specimen after the mass in air and water has been determined. If the entire specimen is used for moisture content determination, care should be taken to remove all the wax from the specimen. The wax can be removed by peeling it off after a break is made in the wax surface. Use only that portion of the specimen which is free of wax or wax inclusions for the moisture content determination.

12.18 Calculate and record the dry density of the specimen.

12.19 Calculate and record the dry unit weight of the specimen.

13. Calculations

13.1 Calculations for determining the dry density and dry unit weight are shown on figure 1.

14. Report

14.1 The report is to consist of a completed and checked "Unit Weight Determination (Suspended Mass in Air and Water Method)" form (fig. 1).

14.2 All calculations are to show a checkmark.

7-1586 (11-85) Bureau of Reclamation	UNIT WEIGHT DETERMINATION (SUSPENDED MASS IN AIR AND WATER METHOD)	Designation USBR 5375- 89
SAMPLE NO. 38W-15	PROJECT Example	FEATURE Example
SPECIMEN NO. 18	TESTED BY	DATE
COMPUTED BY	DATE	CHECKED BY DATE

(1)	Mass of basket in air	117.85 g
(2)	Mass of basket + wet specimen in air	860.45 g
(3)	Mass of basket + wet specimen + wax in air	909.70 g
(4)	Mass of basket in water	104.45 g
(5)	Mass of basket + wet specimen + wax in water	475.15 g
(6)	Moisture content (USBR 5300)	19.54 (%)
(7)	Mass of wet specimen (2) - (1)	742.60 g
(8)	Mass of wax (3) - (2)	49.25 g
(9)	Mass of dry specimen (7)/[1 + (6)/100]	621.21 g
(10)	Volume of basket + wet specimen + wax [(3) - (5)] /[1 g/cm^3]	434.55 cm^3
(11)	Volume of basket [(1) - (4)] /[1 g/cm^3]	13.40 cm^3
(12)	Volume of Wax [(8)/density of wax] ...(wax type b , 0.91 g/cm^3)	54.12 cm^3
(13)	Volume of basket + wax (11) + (12)	67.52 cm^3
(14)	Volume of wet specimen (10) - (13)	367.03 cm^3
(15)	Dry density of specimen [(9)/(14)] x 1000	1693 kg/m^3
(16)	Dry unit weight of specimen (15) x 0.00981	16.6 kN/m^3
		105.7 lbf/ft^3

Constants: 1 g/cm^3 = absolute density of water at 4 °C

1000 converts g/cm^3 to kg/m^3

0.00981 converts mass (kg) to weight (kN)

Density of wax:

(a) Paraffin = 0.89 g/cm^3

(b) Micro-Crystalline Orange = 0.91 g/cm^3

Auxiliary Tests: USBR 5300 - 8 9

USBR 5205 - 8 9

MOISTURE DETERMINATION

(1)	Dish No.	CL-191
(2)	Mass of dish + wet soil	407.40 g
(3)	Mass of dish + dry soil	366.55 g
(4)	Mass of dish	157.45 g
(5)	Mass of water	40.85 g
(6)	Mass of dry soil	209.10 g
(7)	Moisture content	19.54 %

Figure 1. – Unit weight determination (suspended mass in air and water method — example.

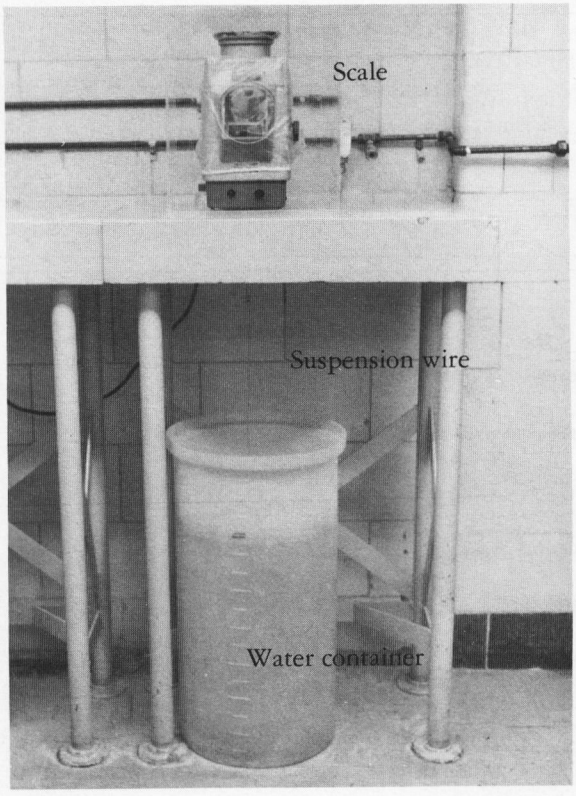

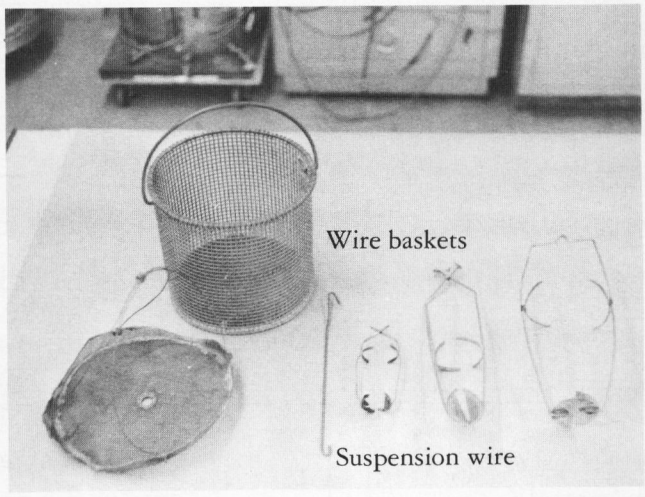

Figure 2. – Suspended mass in air and water assembly.

UNITED STATES DEPARTMENT OF THE INTERIOR
BUREAU OF RECLAMATION

USBR 5380-89

PROCEDURE FOR

DETERMINING THE ANGLE OF REPOSE OF SOILS

INTRODUCTION

This procedure is under the jurisdiction of the Geotechnical Services Branch, code D-3760, Research and Laboratory Services Division, Denver Office, Denver, Colorado. The procedure is issued under the fixed designation USBR 5380. The number immediately following the designation indicates the year of acceptance or the year of last revision.

1. Scope

1.1 This designation outlines the procedure for determining the angle of repose of cohesionless soils.

1.2 This procedure is used to determine the angle of repose of dry cohesionless soil having a maximum particle size up to 3 inches (75 mm).

1.3 This procedure is appropriate for soil classified as clean coarse-grained soil in accordance with USBR 5000 or 5005.

2. Auxiliary Tests

2.1 A test sample must be obtained in accordance with USBR 5205 before performing this procedure and should be classified in accordance with USBR 5000 or 5005. After the sample has been air-dried, the moisture content must be determined and recorded in accordance with USBR 5300 as part of performing this procedure. The graduation of the material must be determined in accordance with USBR 5325 and submitted as part of the report for this procedure.

3. Applicable Documents

3.1 *USBR Procedures*:

USBR 3900 Standard Definitions of Terms and Symbols Relating to Soil Mechanics
USBR 5000 Determining Unified Soil Classification (Laboratory Method)
USBR 5005 Determining Unified Soil Classification (Visual Method)
USBR 5205 Preparing Soil Samples by Splitting or Quartering
USBR 5300 Determining Moisture Content of Soil and Rock by the Oven Method
USBR 5325 Performing Gradation Analysis of Gravel Size Fraction of Soils
USBR 5525 Determining the Minimum Index Unit Weight of Cohesionless Soils

3.2 *ASTM Standard*:

E 11 Specification for Wire Cloth Sieves for Testing Purposes

4. Summary of Method

4.1 A base template, with concentric circles, is placed on a level surface. The air-dried soil is placed into an appropriate pouring device. While holding the pouring device over the center of the base template, the soil is poured onto the template, maintaining a free-fall height of approximately 1 inch (25 mm) above the template or the top soil pile. Pouring is continued until the resultant soil pile height is greater than the designated minimum height. The angle of repose is determined. (The angle is that which the pile slope makes with the base template.)

5. Significance and Use

5.1 Angle of repose can be used to establish a lower bound factor of safety of a slope. The following conditions must exist:

5.1.1 Slope is assumed to be continuous and to consist of homogenous, cohesionless material.

5.1.2 Slope is not subjected to external forces such as seepage, surcharge, earthquake, vibration, etc.

5.1.3 Slope must be dry because angle of repose has no meaning when applied to damp or moist soils.

5.1.4 Granular, cemented materials cannot be properly modeled using angle of repose in slope stability analyses.

5.2 Use of the angle of repose for design is strictly limited by the above considerations; its use should be evaluated by a geotechnical engineer.

5.3 Angle of repose can be estimated—with some scaling error—by observation of natural slopes (like dune sand) or mechanically placed slopes such as batch-plant stockpiles.

6. Terminology

6.1 Definitions are in accordance with USBR 3900. A term of particular significance is:

6.1.1 *Angle of Repose* [α, degrees (°)].–Angle between the horizontal and the maximum slope that a soil assumes through natural processes. For dry granular soils, the effect of height of slope is negligible; for cohesive soils, the effect of height of slope is so great that the angle of repose is meaningless (ASTM definition).

6.2 Terms not included in USBR 3900 specific to this designation are:

6.2.1 *Pile Diameter.*–Horizontal distance at base of the pile from edge to edge through the pile center.

6.2.2 *Pile Height.*–Vertical distance through the center of the soil pile from base to top.

6.2.3 *Pile Slope Length.*–Length of slope measured from the slope toe along the centerline of the pile to the top of the pile.

7. Apparatus

7.1 *General Apparatus*:

7.1.1 *Balance or Scale.*–A typical balance or scale used for this designation must be readable to 1 lbm and have a capacity sufficient for the minimum sample mass requirements given in subparagraph 9.7.

7.1.2 *Drying Oven.*–An oven, thermostatically controlled, preferably of the forced-draft type, and capable of maintaining a uniform temperature of 230±9 °F (110±5 °C) throughout the drying chamber.

7.1.3 *Drying Pan.*–Large metal pan 2 by 3 feet (0.6 by 0.9 m) by 4 inches (100 mm) deep.

7.1.4 *Sieve.*–U.S.A. Standard series 3-inch (75-mm) sieve conforming to the requirements of ASTM E 11.

7.1.5 *Yardstick.*–Graduated in 1/16-inch increments; (optional) two yardsticks with holes drilled at the exact center of the stick width and at various lengths (i.e., 5, 10, 15, 20, and 25 inches) and attached using a bolt, lockwasher, and a wingnut.

7.2 *Equipment Unique to This Procedure*:

7.2.1 *Base Template.*–A template having minimum dimensions of 20 by 20 inches (500 by 500 mm). The template should have concentric circles drawn at diametral increments of 1 inch (25 mm). Perpendicular bisectors should be marked on the template, and the circle radii should be labeled every 5 inches (125 mm) at each perpendicular bisector. Template material should be smooth and flat on both sides. Appropriate material could be clear plastic, masonite, or Plexiglas; however, plywood is recommended.

7.2.2 *Pouring Device.*–Devices are selected based upon maximum particle size of soil.

Maximum particle size		*Pouring device*
in	mm	
3	75	Shovel or extra large hand scoop
1-1/2	37.5	Large hand scoop
3/4	19.0	Large hand scoop
3/8	9.5	Metal can with attached funnel having a 1-in (25-mm) diameter spout
No. 4	4.75	Metal can with attached funnel having a 1/2-in (13-mm) diameter spout

NOTE 1.–The metal can in the last two items is typically a standard 6- by 12-inch metal cylinder can. The funnels should have a lipped brim, or other means, to connect the spout securely to the container. The above equipment is the same as that described in USBR 5525.

7.2.3 *Angle Measuring Device* (method A).–Mechanic's protractor with universal bevel, vernier scale, revolving dial; disk graduation 90 to 0 to 90 degrees with one vernier scale; two blades, 6-1/2 and 12 inches (165 and 300 mm) long.

7.2.3.1 *Alternate Angle Measuring Device.*–Mechanic's protractor (plain); rectangular head, graduated to 180 degrees both directions, 1 degree minimum graduation; arm is 6 inches (150 mm) long.

7.2.4 *Angle Measuring Device* (method B).–Protractor (transparent plastic); with cutout center, 1/2 degree graduations, and 6-inch (150-mm) diameter.

8. Precautions

8.1 *Safety Precautions.*–When soil to be tested is in sacks, care should be taken when lifting, handling, and obtaining samples as sack samples are heavy, awkward, and bulky.

8.2 *Technical Precautions*:

8.2.1 To obtain an accurate reading of the angle of the soil pile, the area near the edge of the pile should be cleaned with a small brush.

8.2.2 If the bottom portion of the pile slope is concave, it is necessary to push the measuring device into the pile such that the corner of the device lies at the point of intersection between the true (projected) pile slope and the base template.

8.2.3 An uncentered pile will not cause appreciable error but the pile should be as symmetrical as possible. Using a template helps to form a symmetric, centered pile.

9. Sampling, Test Specimens, and Test Units

9.1 *Specimen Preparation*:

9.2 Obtain an adequate amount (subpar. 9.7) of the material to be tested and thoroughly mix the material.

9.3 Perform a gradation analysis in accordance with USBR 5325 on a test sample obtained in accordance with USBR 5205.

9.4 Obtain a test specimen in accordance with USBR 5205 for moisture content determination. Perform the moisture content determination in accordance with USBR 5300.

9.5 Air-dry or ovendry the portion of the sample that will be used in the angle of repose test. Soil moisture content must be less than 0.5 percent.

9.6 Record the moisture content on the "Angle of Repose Test" form as shown on figure 1 or 2.

9.7 The sample size required for conducting the angle of repose test is dependent on the maximum particle size. The following table summarizes the minimum pile height and minimum sample mass required for each maximum particle size. The minimum sample mass has been estimated for low values of the angle of repose and is shown only as a guide. For soils having a greater angle of repose, less material probably will be needed.

Maximum particle size		*Minimum pile height*		*Minimum mass required for testing*	
in	mm	in	mm	lbm	kg
3	75	12	300	500	250
1-1/2	37.5	12	300	500	250
3/4	19.0	10	250	300	150
3/8	9.5	8	200	150	75
No. 4	4.75	6	150	60	30

7-2350 (6-86)
Bureau of Reclamation

ANGLE OF REPOSE TEST

Designation USBR 5380-89

PROJECT Example FEATURE _____ LOCATION _____

DEPTH/ELEVATION _____ ☐ ft ☐ m TEMPLATE MATERIAL Plywood POURING DEVICE 6-by 12-inch cylinder can

FUNNEL SIZE 1/2-inch MAXIMUM PARTICLE SIZE No.16 ☐ in ☐ mm ☒ SIEVE TESTED BY _____ DATE _____

COMPUTED BY _____ DATE _____ CHECKED BY _____ DATE _____ SHEET _____ OF _____

SAMPLE NO. 1

SPECIMEN NO. 1

CLASSIFICATION SYMBOL SP

MOISTURE CONTENT (%) 0.4

TRIAL NO.	READING NO.	SLOPE LENGTH (in)	CONVERTED SLOPE LENGTH - DECIMAL (in)	BASE LENGTH (in)	CONVERTED BASE LENGTH - DECIMAL (in)	CALCULATED ANGLE OF REPOSE (°)	VERTEX ANGLE (°)	MEASURED ANGLE OF REPOSE (°)	TRIAL ANGLE OF REPOSE (°)
1	1							34.0	
	2							36.0	
	AVERAGE SLOPE LENGTH =								
	3							35.0	
	4							34.5	
	AVERAGE SLOPE LENGTH =								34.9
2	1							35.5	
	2							34.5	
	AVERAGE SLOPE LENGTH =								
	3							36.0	
	4							34.5	
	AVERAGE SLOPE LENGTH =								35.1

AUXILIARY TESTS:

USBR 5000-__
USBR 5005-__
USBR 5205-89
USBR 5300-89
USBR 5325-89

VALUES USED FOR AVERAGE

TRIAL	VALUE
1	34.9
2	35.1

35.0 AVERAGE VALUE, ROUND TO THE NEAREST 1° = 35°

Figure 1. - Angle of repose test — measurement method A.

7-2350 (6-86)
Bureau of Reclamation

ANGLE OF REPOSE TEST

Designation USBR 5380-89

PROJECT Example FEATURE _____ LOCATION _____

DEPTH/ELEVATION _____ ☐ ft ☐ m TEMPLATE MATERIAL Plywood POURING DEVICE 6-by 12-inch cylinder can

FUNNEL SIZE 1/2-inch MAXIMUM PARTICLE SIZE No.16 ☐ in ☐ mm ☒ SIEVE TESTED BY _____ DATE _____

COMPUTED BY _____ DATE _____ CHECKED BY _____ DATE _____ SHEET _____ OF _____

SAMPLE NO. 1

SPECIMEN NO. 2

CLASSIFICATION SYMBOL SP

MOISTURE CONTENT (%) 0.4

TRIAL NO.	READING NO.	SLOPE LENGTH (in)	CONVERTED SLOPE* LENGTH - DECIMAL (in)	BASE LENGTH (in)	CONVERTED BASE LENGTH - DECIMAL (in)	CALCULATED ANGLE OF REPOSE (°)	VERTEX ANGLE (°)	MEASURED ANGLE OF REPOSE (°)	TRIAL ANGLE OF REPOSE (°)
1	1	14 5/8	14.63						
	2	14 5/8	14.63						
	AVERAGE SLOPE LENGTH =		14.63	23 7/8	23.88	35.3	110.0	35.0	
	3	14 1/2	14.50						
	4	14 9/16	14.56						
	AVERAGE SLOPE LENGTH =		14.53	23 15/16	23.94	34.5	109.0	35.5	34.9
2	1	14 5/8	14.63						
	2	14 1/2	14.50						
	AVERAGE SLOPE LENGTH =		14.57	23 7/8	23.88	35.0	109.5	35.3	
	3	14 5/8	14.63						
	4	14 11/16	14.69						
	AVERAGE SLOPE LENGTH =		14.66	24	24.00	35.1	110.5	34.8	35.1

AUXILIARY TESTS:

USBR 5000-__
USBR 5005-__
USBR 5205-89
USBR 5300-89
USBR 5325-89

VALUES USED FOR AVERAGE

TRIAL	VALUE
1	34.9
2	35.1

35.0 AVERAGE VALUE. ROUND TO THE NEAREST 1° = 35°

Figure 2. - Angle of repose test — measurement method B.

10. Calibration and Standardization

10.1 Verify that equipment is currently calibrated in accordance with the applicable calibration procedure. If the calibration is not current, perform the calibration before using the equipment for this procedure.

11. Conditioning

11.1 Soil to be tested must have 0.5 percent or less moisture content before forming soil pile on template.

12. Procedure

12.1 All data are to be recorded on the "Angle of Repose Test" form as shown on figure 1 or 2. The same form is used but two different measurement methods are illustrated.

12.2 Place the base template on a clean level surface. The test area should be free of vibration and other disturbances which could affect soil pile formation.

12.3 Select the appropriate pouring device. The pouring device used is dependent on maximum particle size as shown in subparagraph 7.2.2.

12.4 *Placement of Soils With Maximum Particle Size 3/8 inch (9.5 mm) or Smaller*:

12.4.1 Fill the pouring device with soil, attach the funnel, and invert while holding a finger or the palm of the hand over the funnel spout opening.

12.4.2 While holding the pouring device over the center of the base template, let the soil fall so that the free-fall height of the soil is about 1 inch (25 mm) above the template or top of the soil pile (see fig. 3).

12.4.3 The pile height should be estimated using a yardstick to ensure the designated minimum height is reached as specified in subparagraph 9.7.

12.4.4 Repeat subparagraphs 12.4.1 and 12.4.2 until all the soil has been placed or until the pile height is greater than the designated minimum height.

12.5 *Placement of Soils With Maximum Particle Size Greater Than 3/8 inch (9.5 mm)*:

12.5.1 Place the soil—with a large scoop or shovel—held as close to the soil pile as possible, but just above the center of the base template or top of the pile as shown on figure 4.

12.5.2 The soil particles should slide from the scoop rather than fall onto the previously placed material. If necessary, hold large particles back with the hand to prevent them from rolling off the scoop (or shovel).

12.5.3 The pile height should be estimated using a yardstick to ensure the minimum designated height is reached as specified in subparagraph 9.7.

12.5.4 Repeat subparagraphs 12.5.1 and 12.5.2 until all the soil has been placed or until the pile height is greater than the designated minimum height.

12.6 Determine the angle of repose by either measurement method A or measurement method B (subpar. 12.6.1 or 12.6.2). The method selected depends on availability of measurement devices. Measurement

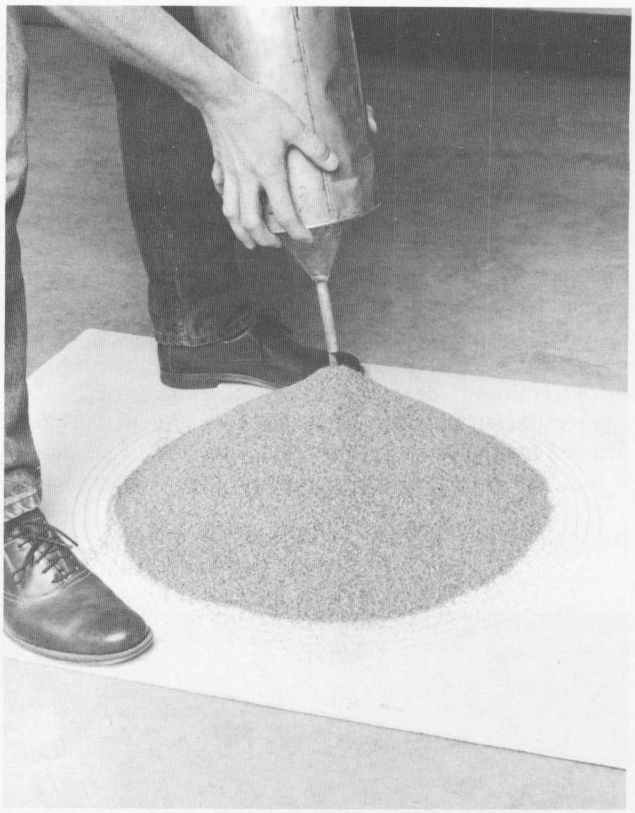

Figure 3. – Placement of soils of 3/8-inch maximum particle size while maintaining a 1-inch free fall height. The pouring device is a 6-inch-diameter by 12-inch-high cylinder with a 1/2-inch funnel.

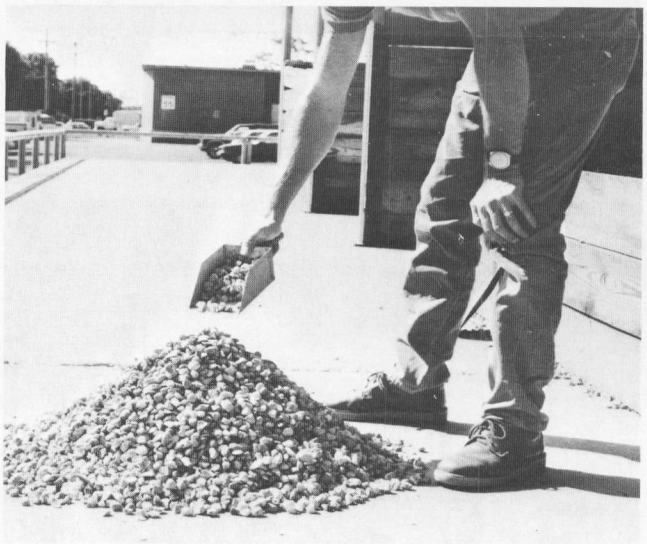

Figure 4. – Placement of soils greater than 3/8-inch maximum particle size while maintaining a 1-inch free fall height. The pouring device shown is a small scoop.

Method B does not require a special measuring device and requires equipment readily available from hardware stores or lumber yards.

12.6.1 *Measurement Method A*:

12.6.1.1 Using the mechanic's protractor, measure from the base template the angle the pile slope makes with the base template at the four locations marked by the perpendicular bisectors on the template (fig. 5). Measure and record in the column *Measured angle of repose* the angle to the nearest 0.5 degree for each reading location as shown on figure 1. When using the mechanics protractor on piles comprised of relatively large particles ($d > 1$ in), use of a yardstick placed on (parallel to) the slope aids in determining the actual slope; the protractor is placed against the stick to measure the angle as shown on figure 6. These readings should be within 2 degrees of each other; if not, repeat the procedure beginning at paragraph 12.

12.6.1.2 Calculate the average angle of repose to the nearest 0.1 degree and record as the trial angle of repose as shown on figure 1. The trial angle of repose values are averaged to the nearest 0.1 degree and recorded on the bottom of figure 1 under *Values used for average*. For the final angle of repose value, round to the nearest 1.0 degree.

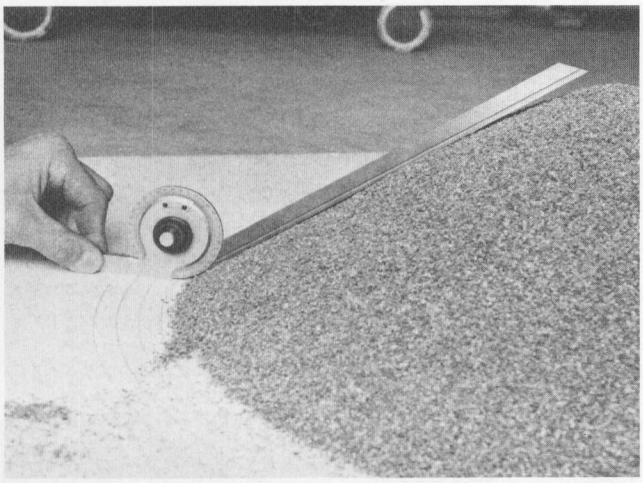

Figure 5. – Measuring the angle of repose of sand using a mechanic's vernier protractor.

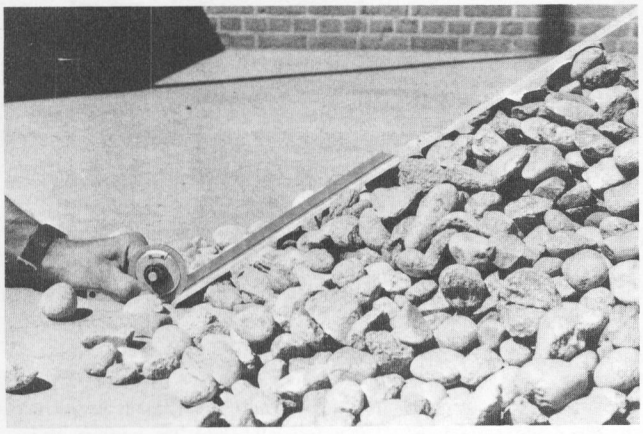

Figure 6. – Measuring the angle of repose of coarse gravel using a mechanic's vernier protractor and yardstick on the pile face.

12.6.2 *Measurement Method B*:

12.6.2.1 There are many possible methods to determine the angle of repose using nonspecialized equipment, such as calculating the value based on pile diameter and height; any can be used. The method described here was found to be simple and practical.

12.6.2.2 Use two yardsticks to form the vertex angle made by the pile as shown on figure 7. The sticks need to have holes drilled at the exact center of the stick width and at various lengths (i.e., 10, 15, 20, 25 inches) and then be joined using a bolt, lockwasher, and a wingnut (fig. 8). Estimate the slope length and bolt the sticks together so they will extend most of the way down the slope. Place the yardsticks on the slope so that the plane of them are perpendicular to the template on the floor. With the intersection of the yardsticks at approximately the peak of the pile, the wingnut is tightened to fix the position of them.

12.6.2.3 The angle of repose can be determined either by measuring the dimensions of the triangle formed by the yardsticks or by measuring the vertex angle formed by them. The following steps describe measuring the dimensions of the triangle with the vertex angle measurement shown as optional in subparagraph 12.6.2.10. The vertex measurement may be performed as a check.

12.6.2.4 Measure the partial slope length along each yardstick and record to the nearest 1/16 inch (1 mm) in the column *Slope length*.

12.6.2.5 Convert the slope measurements to decimal form and record to the nearest 0.01 inch in the column *Converted slope length, decimal*.

12.6.2.6 Average the two slope length measurements and record on the line next to *Average slope length*.

12.6.2.7 Measure the base of the triangle formed by the two yardsticks as shown on figure 9 and record to the nearest 1/16 inch (1 mm) in the column *Base length*.

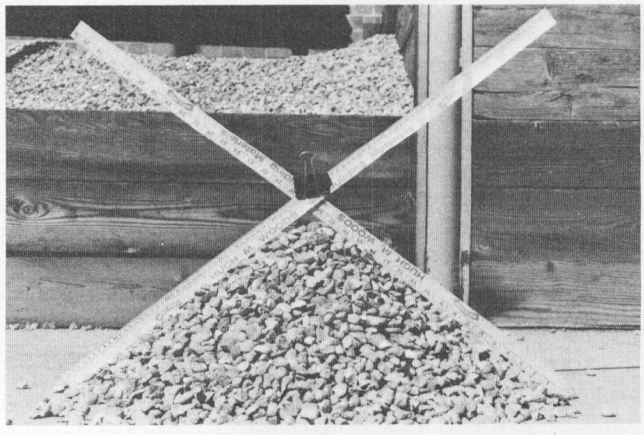

Figure 7. – Using two yardsticks to obtain the angle of repose made by the pile.

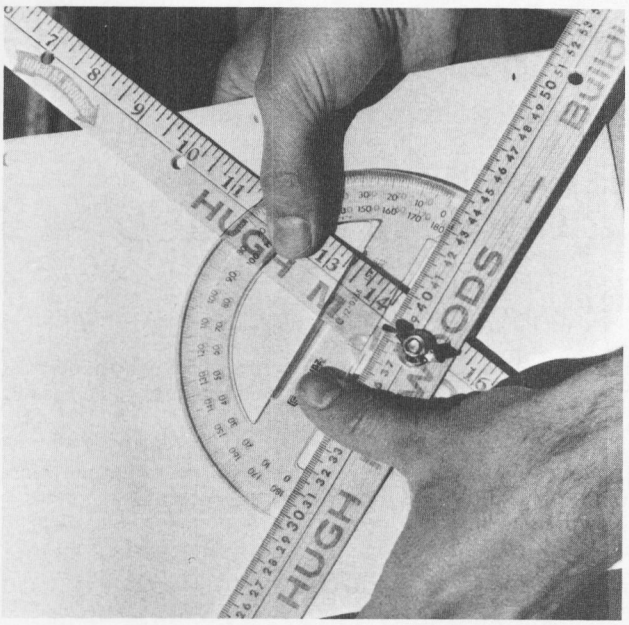

Figure 8. – Measuring the vertex angle using a protractor.

12.6.2.8 Convert the base length measurement to decimal form and record to the nearest 0.01 inch in the column *Converted base length, decimal.*

12.6.2.9 Calculate the angle of repose and record to the nearest 0.1 degree in the column *Calculated angle of repose.*

12.6.2.10 (Optional) Measure the vertex angle formed by the two yardsticks, as shown in figure 8, using a protractor and record to the nearest 0.5 degree in the column *Vertex angle.* Calculate the angle of repose and record to the nearest 0.1 degree in the column *Measured angle of repose.* This value should agree within 2 degrees of the value calculated in subparagraph 12.6.2.9.

12.6.2.11 Repeat steps in subparagraphs 12.6.2.4 through 12.6.2.10 at a location on the pile that is 90 degrees from the previous measurement location.

12.6.2.12 Average the two *Calculated angle of repose* values and record to the nearest 0.1 degree as the *Trial angle of repose.*

12.7 Repeat the entire procedure from subparagraphs 12.2 through 12.6 for a second trial. The angle of repose obtained from the two trials should be within 2 degrees; if not, a third trial should be performed. Average the two closest trial angle of repose values obtained for the final estimated angle of repose of the material, and record to the nearest 0.1 degree on bottom of figure 2 under the heading *Values used for average.* Round the average to the nearest 1 degree and record.

13. Calculations (see fig. 10)

13.1 Calculate the average angle of repose.

$$\alpha = \cos^{-1} \frac{B}{2L} \qquad (1)$$

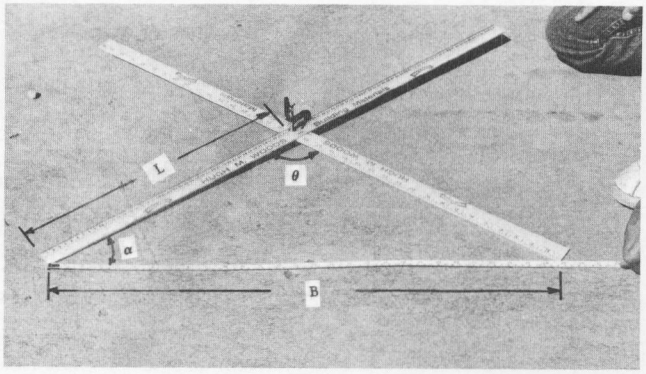

Figure 9. – Measuring the triangle base formed by two yardsticks.

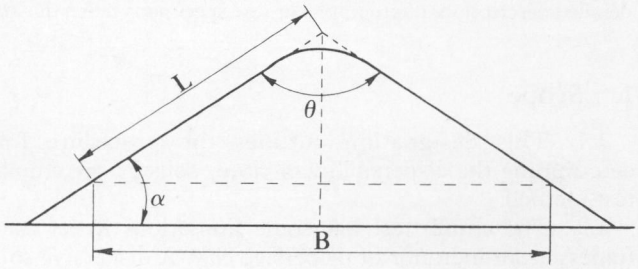

Figure 10. – Diagram for calculating the angle of repose.

where:

α = angle of repose
L = partial slope length
B = partial base length of pile

13.2 Calculate the angle of repose using the pile vertex angle.

$$\alpha = 90° - \frac{\theta}{2} \qquad (2)$$

where:

α = angle of repose
θ = pile vertex angle

14. Report

14.1 The report is to consist of the following completed and checked forms and plot:

"Angle of Repose Test — Method A" (fig. 1) or "Angle of Repose Test — Method B" (fig. 2).

"Gradation Test" plot (see USBR 5325).

14.2 All calculations are to show a checkmark and all plotting must be checked.

15. Background Reference

MacIver, B.N., "Engineering Properties of Nuclear Craters," *Report 4: The Formation and Initial Stability of Slopes on Cohesionless Materials*, U.S. Army Corps of Engineers, Waterways Experiment Station, Vicksburg, Mississippi, August 1967.

UNITED STATES DEPARTMENT OF THE INTERIOR
BUREAU OF RECLAMATION

USBR 5400-89

PROCEDURE FOR

DETERMINING DISPERSIBILITY OF CLAYEY SOILS BY THE CRUMB TEST METHOD

INTRODUCTION

This procedure is under the jurisdiction of the Geotechnical Services Branch, code D-3760, Research and Laboratory Services Division, Denver Office, Denver, Colorado. The procedure is issued under the fixed designation USBR 5400. The number immediately following the designation indicates the year of acceptance or the year of last revision.

This procedure is similar to that outlined in a Bureau report [1],[1] except that this procedure contains a rewritten and more detailed description, photographs of test specimens taken during the test, and the assigned crumb test dispersion grades.

1. Scope

1.1 This designation outlines the procedure for determining the dispersibility of clayey soils by the crumb test method.

1.2 The crumb test has some limitations in its usefulness as an indicator of dispersive clay. A dispersive soil may sometimes give a nondispersive reaction in the crumb test. Soils containing kaolinite with known field dispersion problems have shown nondispersive reactions in the crumb test [1]. However, if the crumb test indicates dispersion, the soil is probably dispersive.

1.3 Ovendried soil should not be used to prepare crumb test specimens, as irreversible changes could occur to the soil pore-water physicochemical properties responsible for dispersion [2].

1.4 The crumb test generally should be conducted along with the double hydrometer test and the pinhole test, USBR 5405 and 5410, respectively. In some cases, the results of the pinhole, crumb, and double hydrometer tests may disagree. The pinhole test is a direct, physical, quantitative test method for identifying dispersive clays. The crumb and double hydrometer tests are qualitative tests and, therefore, have limitations on their usefulness in identifying dispersive clays.

2. Applicable Documents

2.1 *USBR Procedures*:
USBR 3900 Standard Definitions of Terms and Symbols Relating to Soil Mechanics
USBR 5205 Preparing Soil Samples by Splitting or Quartering
USBR 5405 Determining Dispersibility of Clayey Soils by the Double Hydrometer Test Method
USBR 5410 Determining Dispersibility of Clayey Soils by the Pinhole Test Method

2.2 *ASTM Standard*:
E 1 ASTM Thermometers

[1] Number in brackets refers to the reference.

3. Significance and Use

3.1 The crumb test provides a simple, quick method for field or laboratory identification of dispersive clay.

3.2 The crumb test, as originally developed by Emerson [3], was called the aggregate coherence test and had seven different categories of soil-water reactions. Sherard [4] later simplified the test by combining some soil-water reactions so that only four categories, or grades, of soil dispersion are observed during the test.

3.3 The crumb test has been successfully used by the Bureau, as an auxiliary test, with the pinhole test as the primary test, during preliminary investigations of soil dispersibility. As previously noted the crumb test generally should be conducted in conjunction with the pinhole and double hydrometer tests.

4. Terminology

4.1 Definitions are in accordance with USBR 3900. A term of particular significance is:

4.1.1 *Dispersive Clay.*–Clay colloids that deflocculate in the presence of water because the physicochemical repulsive forces on the particles exceed the attractive forces. Dispersive clay colloids are easily detached from one another, and the individual particles go into suspension in the presence of water.

5. Apparatus

5.1 *Specimen Container.*–Dish, porcelain, evaporating, 300-mL capacity.

5.2 *Thermometer.*–0 to 50 °C range, 0.5°C divisions, conforming to the requirements of ASTM E 1.

6. Reagents and Materials

6.1 Distilled water should be used for conducting the test and for preparing remolded specimens.

7. Precautions

7.1 *Technical Precautions*:

7.1.1 Carefully place the soil crumb specimen directly on the bottom of the porcelain dish when submerging the crumb. Dropping the crumb from the water surface can cause excessive slaking and may result in erroneous interpretation of the dispersion grade.

7.1.2 Do not jar or move the soil specimen or porcelain dish during the test.

7.1.3 Do not use ovendried soil for crumb test specimens.

7.1.4 The use of natural, irregular-shaped soil crumbs may result in a specimen that is not representative of the total sample. Therefore, several crumb test specimens are to be selected to ensure that representative test results are obtained. The total number of test specimens should be determined during the test program and depends on the degree of agreement of individual test results.

8. Sampling, Test Specimens, and Test Units

8.1 Two methods of obtaining test specimens are available:

8.1.1 *Remolded Specimens*:

8.1.1.1 A cube, approximately 15 mm on each side, is prepared from moist soil passing the U.S.A. Standard series No. 4 (4.75 mm) sieve. Generally, 400 grams of minus No. 4 soil are obtained in accordance with USBR 5205. This 400-g test sample contains enough soil to conduct crumb, pinhole, and double hydrometer tests. The crumb test specimen can be prepared when the 400-g soil sample has been cured at the moisture content desired for compacting the pinhole test specimen. As an alternate method, the crumb test specimen can be prepared as a separate specimen by adding water until wetted approximately to the plastic limit.

8.1.2 *Natural Specimens*:

8.1.2.1 A natural, irregular-shaped soil crumb is selected that has been preserved at natural moisture or only allowed to air-dry. This soil crumb should be approximately the same volume as a cube 15 mm on each side. Smaller volume soil crumbs may be used if larger ones are unavailable. The crumb test specimen should be selected as soon as possible after receiving the soil sample.

9. Calibration and Standardization

9.1 Not applicable, reference standards are not used for this procedure.

10. Conditioning

10.1 Preserve crumb test specimens at natural moisture content, if possible, or allow specimens to air-dry.

10.2 Do not use ovendried soil for crumb test specimens.

11. Procedure

11.1 All data are to be recorded on the "Crumb Test" form as shown on figure 1.

11.2 Place a 300-mL porcelain evaporating dish on a horizontal working surface near the top of the crumb test data form. Placing the evaporating dish on the test data form is a simple way of keeping track of a large number of simultaneous tests; however, other methods may be used.

11.3 Record the applicable test specimen information as shown on figure 1.

11.4 Pour approximately 250 mL of distilled water into the dish and allow water temperature to stabilize. Determine and record initial water temperature just before beginning the test.

11.5 Prepare a crumb test specimen by lightly compressing a moist soil sample into a cube approximately 15 mm on each side. Use the thumbs and index fingers to gently form the cube.

NOTE 1.–A natural, irregular-shaped soil specimen may be used in lieu of the remolded specimen described above. For this case, several specimens should be selected to ensure that test results obtained are representative of the total sample. Natural, irregular-shaped crumb specimens should be selected from homogeneous soil samples with an abundance of aggregated soil lumps suitable for crumb test specimens with little or no additional preparation required.

11.6 Carefully place the specimen in the water and gently release it only after placing it directly on the bottom of the dish.

11.7 Note and record the time of specimen placement as shown on figure 1.

11.8 As the soil crumb begins to absorb water, observe the tendency for colloidal-sized particles to deflocculate and go into suspension.

NOTE 2.–The colloidal-sized particles are visible in the form of a dense "cloud," or halo, that extends from the soil crumb. The extent and turbidity of the suspended clay particle "cloud" is visually interpreted. The colloidal "cloud" is influenced by soil color; i.e., dark soils produce a darker, more distinctly visible cloud.

11.9 Compare the reaction of the soil crumb to the following criteria:

11.9.1 *Grade 1.*–No reaction; the soil may crumble, slake, diffuse, and spread out, but there is no turbid water created by colloids suspended in the water. All particles settle during the first hour.

11.9.2 *Grade 2.*–Slight reaction; this is the transition grade. A faint, barely visible colloidal suspension causes turbid water near portions of the soil crumb surface or all around the surface. If the cloud is easily visible, assign grade 3. If the cloud is faintly seen in only one small area, assign grade 1.

11.9.3 *Grade 3.*–Moderate reaction; an easily visible cloud of suspended clay colloids is seen around all of the outside soil crumb surface. The cloud may extend up to

10 mm away from the soil crumb mass along the bottom of the dish.

11.9.4 *Grade 4.*–Strong reaction; a dense, profuse cloud of suspended clay colloids is seen around the entire bottom of the dish. Occasionally, the soil crumb dispersion is so extensive that it is difficult to determine the interface of the original soil crumb and the colloidal suspension. Often, the colloidal suspension is easily visible on the sides of the dish.

NOTE 3.–Refer to figure 2 for soil crumb specimens and the assigned dispersion grades.

11.10 Determine and record the soil crumb dispersion grade (as outlined in subpar. 11.9) at 2 minutes, 15 minutes, 1 hour, and 24 hours.

11.11 Determine and record the water temperature at 2 minutes, 15 minutes, 1 hour, and 24 hours. Be careful to submerge the thermometer bulb without touching or disturbing the test specimen.

11.12 Photograph the crumb test specimen after the 24-hour reading.

12. Interpretation of Results

12.1 Use the following criteria to classify crumb test results:

12.1.1 *Grade 1.*–Nondispersive.

12.1.2 *Grade 2.*–Intermediate.

12.1.3 *Grades 3 and 4.*–Dispersive.

12.2 If the dispersive grade changed during the test, the 1-hour reading normally is used for the overall test evaluation.

13. Report

13.1 The report is to consist of the following:
Completed "Crumb Test" form (fig. 1).
Photograph of test specimen after 24-hour reading.

14. References

[1] Kinney, James L., *Laboratory Procedures for Determining the Dispersibility of Clayey Soils*, Bureau of Reclamation Report No. REC-ERC 79-10, 20 pp., Sept. 1979.

[2] Holmgren, G.C.S., and C. P. Flanagan, "Factors Affecting Spontaneous Dispersion of Soil Materials as Evidenced by the Crumb Test, *ASTM Proceedings*, Symposium on Dispersive Clays, STP 623, Chicago, Illinois, pp. 218-239, 1976.

[3] Emerson, W. W., "A Classification of Soil Aggregates Based on Their Coherence in Water," *Australian Journal of Soil Research*, vol. 2, pp. 211-217, 1964.

[4] Sherard, J. L., L. P. Dunnigan, and R. S. Decker, "Identification and Nature of Dispersive Soils," *Proceedings of the ASCE, Journal of the Geotechnical Division*, vol. 102, No. GT4, Paper 12052, pp. 287-301, April 1976.

7-2324 (9-85) Bureau of Reclamation	CRUMB TEST	Designation USBR 5400 - 89
SAMPLE NO. 56C-107	FEATURE Example	PROJECT Example
TESTED BY	DATE:	

Natural Moisture Content (as received): 23.4 %

☒ Distilled Water was Added to Remold Crumb Test Specimen Initial Water Temperature 22.0 °C

☐ Irregular Shaped Natural Crumb Test Specimen Time at Beginning of Test 7:30

SAMPLE NUMBER	DISH NUMBER	2 MIN.		15 MIN.		1 HOUR		24 HOURS	
		GRADE	°C	GRADE	°C	GRADE	°C	GRADE	°C
56C-107 #1	23	2	23.0	3	23.0	4	22.0	4	22.0

REMARKS Dispersive

GPO 848 - 604

Figure 1. - Crumb test — example.

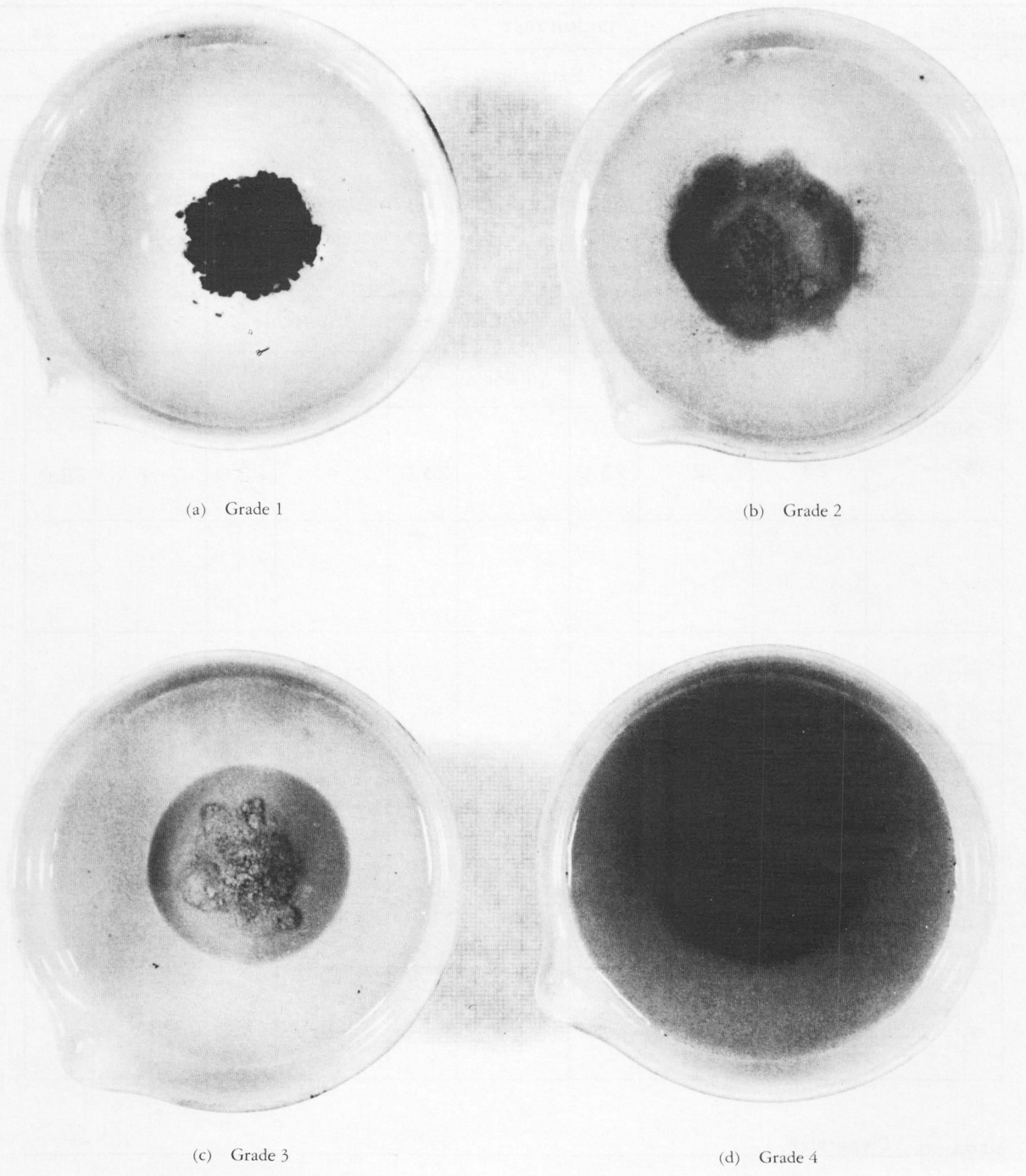

(a) Grade 1

(b) Grade 2

(c) Grade 3

(d) Grade 4

Figure 2. – Soil crumb specimens and assigned dispersion grades.

UNITED STATES DEPARTMENT OF THE INTERIOR
BUREAU OF RECLAMATION

USBR 5405-89

PROCEDURE FOR

DETERMINING DISPERSIBILITY OF CLAYEY SOILS BY THE DOUBLE HYDROMETER TEST METHOD

INTRODUCTION

This procedure is under the jurisdiction of the Geotechnical Services Branch, code D-3760, Research and Laboratory Services Division, Denver Office, Denver, Colorado. The procedure is issued under the fixed designation USBR 5405. The number immediately following the designation indicates the year of acceptance or the year of last revision.

This procedure is similar to that outlined in a Bureau report [1],[1] except that this procedure contains a rewritten and more detailed description.

1. Scope

1.1 This designation outlines the procedure for estimating the dispersibility of clayey soils by the double hydrometer test method.

1.2 This procedure, when used in conjunction with USBR 5330 on a duplicate soil specimen, provides an indication of the natural dispersibility of clayey soils.

1.3 Dispersibility, dispersivity, or dispersion refers to the process of clay colloid deflocculation in the presence of water. This procedure measures the dispersive characteristics of a soil by determining the percentage of soil particles finer than 0.005 mm in a soil-water suspension prepared without dispersing agent and without mechanical agitation and comparing that result with the percentage of soil particles finer than 0.005 mm determined in accordance with USBR 5330.

1.4 This procedure should be conducted only on soils with more than 12 percent minus 0.005-mm particles and with a plasticity index equal to or greater than 8, as determined in accordance with USBR 5330, 5350, and 5360.

1.5 This designation may not identify all dispersive clay soils.

1.6 The double hydrometer test generally should be conducted along with the crumb test and pinhole test, USBR 5400 and 5410, respectively.

2. Auxiliary Tests

2.1 A test sample must be obtained in accordance with USBR 5205 prior to performing this procedure. The hydrometer must be calibrated in accordance with USBR 1405 and the moisture content must be determined in accordance with USBR 5300 prior to performing this procedure. The gradation analysis of a duplicate soil sample must be determined in accordance with USBR 5330 to allow interpretation of the results obtained from performing this procedure.

[1] Number in brackets refers to the reference.

3. Applicable Documents

3.1 *USBR Procedures*:
USBR 1012 Calibrating Balances or Scales
USBR 1020 Calibrating Ovens
USBR 1025 Checking Sieves
USBR 1405 Calibrating Hydrometers
USBR 3900 Standard Definitions of Terms and Symbols Relating to Soil Mechanics
USBR 5205 Preparing Soil Samples by Splitting or Quartering
USBR 5300 Determining Moisture Content of Soil and Rock by the Oven Method
USBR 5330 Performing Gradation Analysis of Fines and Sand Size Fraction of Soils, Including Hydrometer Analysis
USBR 5350 Determining the Liquid Limit of Soils by the One-Point Method
USBR 5360 Determining the Plastic Limit and Plasticity Index of Soils
USBR 5400 Determining Dispersibility of Clayey Soils by the Crumb Test Method
USBR 5410 Determining Dispersibility of Clayey Soils by the Pinhole Test Method

3.2 *ASTM Standards*:
E 1 ASTM Thermometers
E 11 Specification for Wire-Cloth Sieves for Testing Purposes
E 100 Specification for ASTM Hydrometers

4. Summary of Method

4.1 The percent of particles finer than 0.005 mm is determined from this procedure and compared to the percent of particles finer than 0.005 mm determined in accordance with USBR 5330. The ratio of the 0.005-mm fractions is then compared to a qualitative table originally developed by the Soil Conservation Service [2]. Soils having a dispersion ratio of greater than 50 percent have generally been found to be dispersive.

5. Significance and Use

5.1 The double hydrometer test is performed to obtain a qualitative indication of the dispersibility of clayey soil.

5.2 A completely dispersive clay soil will deflocculate to individual particles without the addition of dispersing agent or mechanical agitation while a completely aggregated, flocculated clay soil will remain aggregated under identical conditions.

6. Terminology

6.1 Definitions are in accordance with USBR 3900. A term of particular significance is:

6.1.1 *Dispersive Clay.*–Clay colloids that deflocculate in the presence of water because the physiochemical repulsive forces on the particles exceed the attractive forces. Dispersive clay colloids are easily detached from one another, and the individual particles go into suspension in the presence of water.

6.2 Terms not included in USBR 3900 specific to this designation are:

6.2.1 *Cations.*–Positively charged ions. Na, Ca, Mg, and K are usually the major cations present in a soil-water system.

6.2.2 *Percent Dispersion.*–The ratio of the percent finer than 0.005-mm particles determined in accordance with this procedure to the percent finer than 0.005-mm particles determined in accordance with USBR 5330, expressed as a percentage.

6.2.3 *Turbidity.*–Visual cloudiness caused by suspended clay colloids in water.

7. Interferences

7.1 This procedure may not identify all dispersive soils. Some soils have been classified nondispersive in the double hydrometer test yet show field erosion patterns characterstic of dispersive clays.

8. Apparatus

8.1 *General Apparatus*:

8.1.1 *Balance or Scale.*–A typical balance or scale used for this designation must be readable to 0.1 g and have a capacity of about 500 g.

8.1.2 *Drying Oven.*–An oven, thermostatically controlled, preferably of the forced-draft type, and capable of maintaining a uniform temperature of 230±9 °F (110±5 °C) throughout the drying chamber.

8.1.3 *Sieves.*–U.S. Standard series Nos. 4, 16, 18, 30, 50, 100, and 200 (4.75, 1.18, 1.00 mm, and 600, 300, 150, 75 μm) sieves, conforming to requirements of ASTM E 11.

8.1.4 *Bags.*–One-quart, moisture proof, plastic.

8.1.5 *Sedimentation cylinder.*–A glass cylinder about 460 mm in height, 63.5 mm in diameter, and marked 360±20 mm (18 by 2.5 by 14 in) from the bottom of the inside to indicate a volume of 1000 mL.

8.1.6 *Soil Hydrometer.*–A soil hydrometer, graduated to read in grams per liter of suspension and conforming to requirements for hydrometer 152H in ASTM E 100.

8.1.7 *Thermometer.*–0 to 50 °C range, 0.5° divisions, conforming to requirements of ASTM E 1.

8.1.8 *Vacuum Pump.*–Capable of evacuating entrapped air from test specimen.

8.1.9 *Timing Device.*–Stopwatch or clock with sweep second hand.

8.2 *Equipment Unique to This Procedure*:

8.2.1 *Vacuum Flask.*–A flask, 250-mL minimum capacity, with a rubber stopper and a side tube capable of withstanding a vacuum (see fig. 1).

8.3 *Miscellaneous Equipment.*–Mixing pans, rubber stopper for sedimentation cylinder, sample splitter, and rubber stopper for vacuum flask.

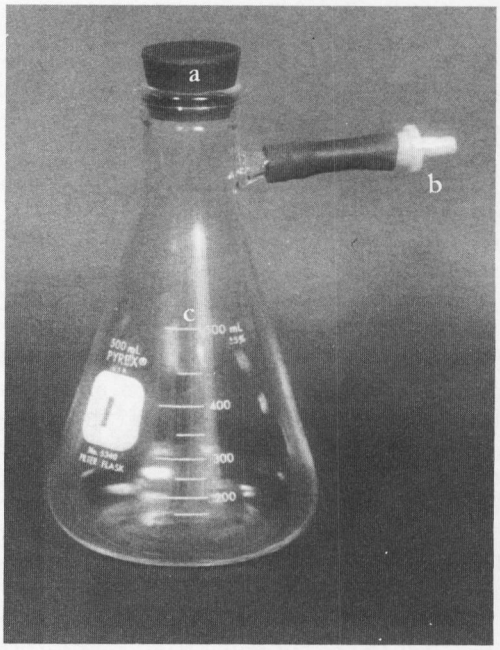

Figure 1. – Vacuum flask assembly. a) rubber stopper, b) vacuum attachment, and c) vacuum flask.

9. Reagents and Materials

9.1 Distilled water must be used for calibrating the hydrometer, wetting the soil specimen in the vacuum flask, and mixing the soil specimen in the sedimentation cylinder.

10. Precautions

10.1 *Technical Precautions*:

10.1.1 When dispersing the specimens, shake the vacuum flask gently to avoid unnecessary scouring or breakdown of coarse-grained particles.

10.1.2 It is important to maintain the soil as close as possible to field moisture content prior to testing.

11. Sampling, Test Specimens, and Test Units

11.1 *Sample Preparation.*–Obtain 400 grams of minus No. 4 (4.75 mm) test sample in accordance with USBR 5205.

NOTE 1.–To provide sufficient material for concurrently performing USBR 5400 and 5410, 400 grams of soil are required.

11.2 *Specimen Preparation.*–Prepare a 100-gram test specimen by splitting or quartering and determine the moisture content in accordance with USBR 5300. Retain the remainder of the 400-gram test sample in a moisture proof, plastic bag.

12. Calibration and Standardization

12.1 Verify that equipment is currently calibrated in accordance with the applicable calibration procedure. If the calibration is not current, perform the calibration before using the equipment for this procedure.
USBR 1012 Calibrating Balances or Scales
USBR 1020 Calibrating Ovens
USBR 1025 Checking Sieves
USBR 1405 Calibrating Hydrometers

12.2 The hydrometer calibration should be determined using distilled water.

13. Conditioning

13.1 Test specimens should be prepared and processed as quickly as possible to minimize unrecorded moisture loss which would result in an erroneous moisture content determination for the test specimen.

14. Procedure

14.1 All data are to be recorded on the "Gradation Analysis" form as shown on figure 2.

14.2 Place approximately 100 mL of distilled water in the vacuum flask.

14.3 Determine the mass of moist soil (i.e., soil preserved at natural moisture) equivalent to 50.0 grams of dry soil.

$$m_m = m_d \left(1.0 + \frac{w}{100}\right) \qquad (1)$$

where:
m_m = mass of moist soil, g
m_d = mass of ovendried soil, g
w = moisture content of specimen, %
100 = convert from percent to decimal

14.4 Obtain a moist soil specimen, by splitting or quartering, equivalent to 50.0 grams dry soil.

14.5 Add the moist soil to the vacuum flask. Place a rubber stopper into the mouth of the flask and connect the flask to the vacuum pump.

14.6 Start the vacuum pump and apply full vacuum to assist in saturating the specimen. If air bubbles do not appear, the vacuum is insufficient.

14.7 At 3, 5, and 8 minutes after applying the vacuum, gently shake and roll the flask to assist removal of the entrapped air. Shake the flask gently to avoid unnecessary scouring or agitation of the soil specimen.

14.8 Disconnect the flask from the vacuum after 10 minutes total evacuation time.

14.9 Transfer all of the de-aired mixture to the 1000-mL sedimentation cylinder and add distilled water until the total soil-water volume is 1000 mL.

14.10 Place the sedimentation cylinder in a constant temperature water bath at 66 to 77 °F (19 to 25 °C) until the cylinder adjusts to the bath temperature.

14.11 Remove the sedimentation cylinder from the constant temperature water bath.

14.12 Place a rubber stopper over the open end of the cylinder. Press down firmly on the rubber stopper to ensure a proper seal.

14.13 Agitate the sedimentation cylinder by turning the cylinder end over end for a period of 1 minute.

14.14 Replace the sedimentation cylinder in the constant temperature water bath, remove the rubber stopper, and start the stopwatch.

14.15 Record the starting time as shown on figure 2.

NOTE 2.–The time interval for performing subparagraphs 14.6 through 14.15 must not exceed 1 hour.

14.16 The remainder of the procedure is performed in accordance with USBR 5330.

14.17 Determine the percentage finer than the No. 200 sieve (75 μm) and the gradation of the sand fraction of the soil specimen following the detailed procedure outlined in USBR 5330.

14.18 Plot the results obtained as shown on figure 3.

15. Calculations and Interpretation of Results

15.1 Calculate percent dispersion.

$$\% \text{ Dispersion} = \left(\frac{\% \text{ finer than 0.005 mm in this test}}{\% \text{ finer than 0.005 mm in standard test, USBR 5330}}\right)100 \qquad (2)$$

15.2 When the percent dispersion equals 100, it indicates a completely dispersive clay-sized fraction. When the percent dispersion equals 0, it indicates a completely nondispersive clay-sized fraction.

15.3 Interpret the percent dispersion as follows:

< 30 percent dispersion — nondispersive
30 to 50 percent dispersion — intermediate
> 50 percent dispersion — dispersive

16. Report

16.1 The report is to consist of the following completed and checked forms:
"Gradation Analysis" form (fig. 2)
"Gradation Test" plots (fig. 3).

16.2 All calculations are to show a checkmark and all plotting must be checked.

17. References

[1] Kinney, James L., *Laboratory Procedures for Determining the Dispersibility of Clayey Soils*, Bureau of Reclamation Report No. REC-ERC-79-10, 20 pp., Sept. 1979.

[2] Decker, R. S. and L. P. Dunnigan, "Development and Use of the Soil Conservation Service Dispersion Test," *Dispersive Clays, Related Piping, and Erosion in Geotechnical Projects*, ASTM STP 623, Philadelphia, PA, pp. 94-109, 1977.

17.1 *Background References*

Volk, G. M., "Method of Determination of Degree of Dispersion of the Clay Fraction of Soils," *Proceedings, Soil Science Society of America*, vol. II, p. 561, 1937.

Ryker, N. L., "Encountering Dispersive Clays on Soil Conservation Service Projects in Oklahoma," *Dispersive Clays, Related Piping, and Erosion in Geotechnical Projects*, ASTM STP 623, Philadelphia, PA, pp. 370-389, 1977.

Sherard, J. L., R. S. Decker, and N. L. Ryker, "Piping in Earth Dams and Dispersive Clay," *Proceedings of the Specialty Conference on Performance of Earth and Earth-Supported Structures*, American Society of Civil Engineers, New York, NY, 1972.

Sherard, J. L., L. P. Dunnigan, and R. S. Decker, "Some Engineering Problems with Dispersive Clay," *Dispersive Clays, Related Piping, and Erosion in Geotechnical Projects*, ASTM STP 623, Philadelphia, PA, pp. 3-12, 1977.

7-1451 (9-86) Bureau of Reclamation	GRADATION ANALYSIS	Designation USBR 5325-__ Designation USBR 5330-__ Designation USBR 5335-__
SAMPLE NO. 17A-1	PROJECT Example	FEATURE USBR 5405
AREA	EXC. NO.	DEPTH

GRADATION OF GRAVEL SIZES

TESTED AND COMPUTED BY	DATE	% MOISTURE CONTENT OF + NO. 4	WET MASS OF TOTAL SPECIMEN
CHECKED BY	DATE	% MOISTURE CONTENT OF - NO. 4	TOTAL DRY MASS OF SPECIMEN

SIEVE SIZE		3" (75 mm)	1-1/2" (37.5 mm)	3/4" (19.0 mm)	3/8" (9.5 mm)	NO. 4 (4.75 mm)	PAN
MASS OF CONTAINER AND RETAINED MATERIAL							
MASS OF CONTAINER							
WET MASS RETAINED							
DRY MASS RETAINED							
DRY MASS PASSING							☐ lbm ☐ kg ☐ g
% OF TOTAL PASSING						100.0	

GRADATION OF SAND SIZES

DRY MASS OF SPECIMEN 55.7 g

FACTOR = $\frac{\text{\% TOTAL PASSING NO. 4}}{\text{DRY MASS OF SPECIMEN}} = \frac{100.0}{55.7} = 1.795$

DISH NO. 153

DRY MASS OF SPECIMEN (SIEVED) 29.3

SIEVING TIME 15 min.

DATE

SIEVE NO.	MASS RETAINED (g)	MASS PASSING (g)	FACTOR X MASS PASSING = % OF TOTAL PASSING	% OF TOTAL PASSING	PARTICLE DIAMETER	REMARKS
8	1.5	54.2		97.3	2.36 mm	10 minute vaccuum
16	6.3	49.4		88.7	1.18 mm	
30	11.6	44.1		79.2	600 μm	
50	17.4	38.3		68.7	300 μm	
100	23.2	32.5		58.3	150 μm	
200	29.0	26.7		47.9	75 μm	
PAN	0.3					
TOTAL	29.3					

TESTED AND COMPUTED BY	DATE	CHECKED BY	DATE

HYDROMETER ANALYSIS

HYDROMETER NO. 414

DISPERSING AGENT None*

STARTING TIME

DATE

AMOUNT mL

TIME	TEMP °C	HYD READ	HYD CORR	CORR READ	FACTOR X CORRECT READ = % OF TOTAL PASSING	% OF TOTAL PASSING	PARTICLE DIAMETER	REMARKS
								* Double hydrometer
1 min	27.0	21.5	3.5	18.0		32.3	37 μm	test method
4 min	27.0	16.5	3.5	13.0		23.3	19 μm	
19 min	27.0	12.5	3.5	9.0		16.2	9 μm	
60 min	27.0	10.5	3.5	7.0		12.6	5 μm	AUXILIARY TESTS: USBR 5205-89 USBR 5300-89
7 h 15 min*							2 μm	
25 h 45 min*							1 μm	

TESTED AND COMPUTED BY	DATE	CHECKED BY	DATE

*Not required for standard test.

GPO 853 - 659

Figure 2. – Gradation analysis – double hydrometer example.

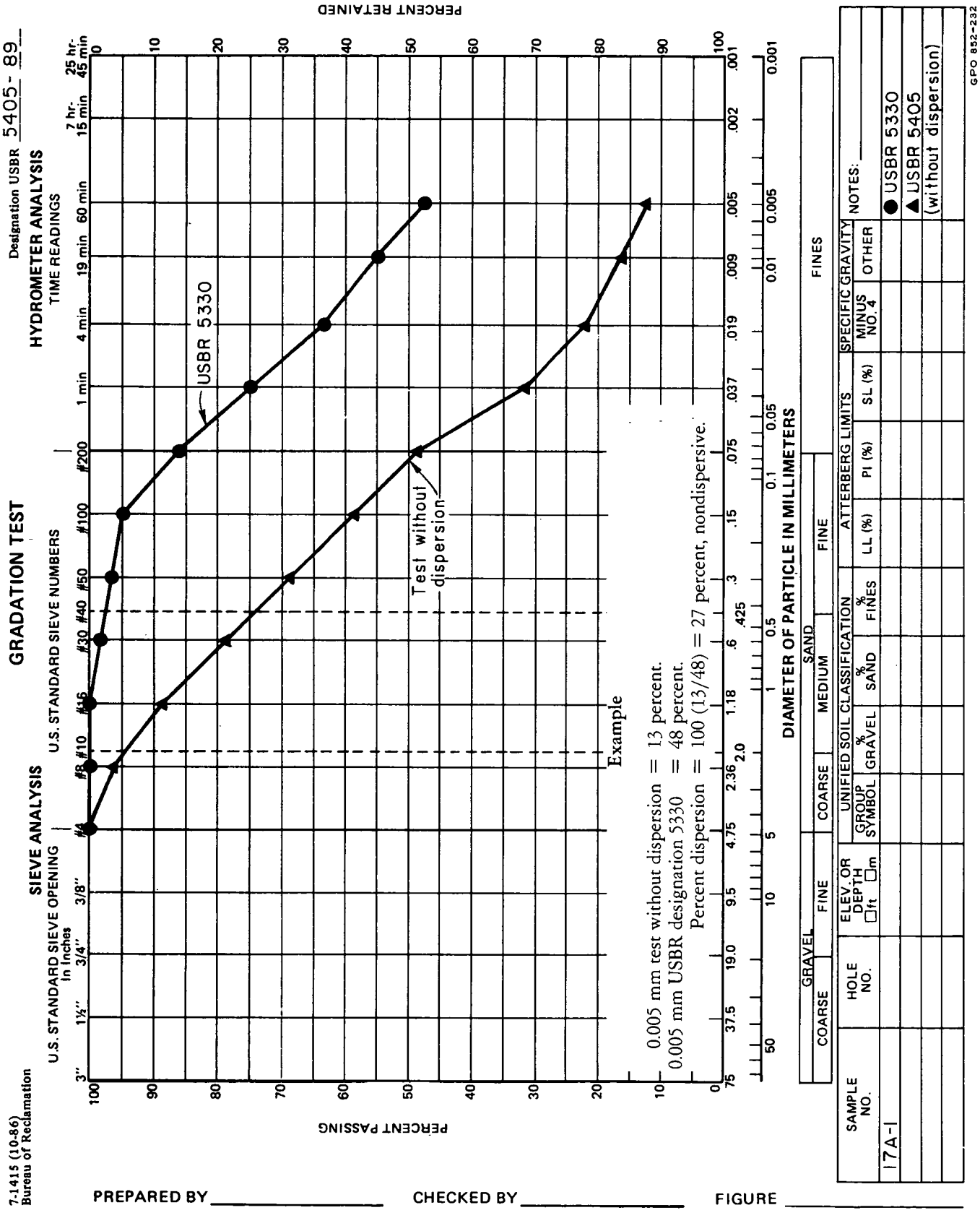

Figure 3. – Double hydrometer test results — example plot.

UNITED STATES DEPARTMENT OF THE INTERIOR
BUREAU OF RECLAMATION

USBR 5410-89

PROCEDURE FOR

DETERMINING DISPERSIBILITY OF CLAYEY SOILS BY THE PINHOLE TEST METHOD

INTRODUCTION

This procedure is under the jurisdiction of the Geotechnical Services Branch, code D-3760, Research and Laboratory Services Division, Denver Office, Denver, Colorado. The procedure is issued under the fixed designation USBR 5410. The number immediately following the designation indicates the year of acceptance or the year of last revision.

This procedure is similar to that outlined in a Bureau report [1],[1] except that this procedure contains a rewritten and more detailed description, new equipment design features, and new data forms for recording and interpreting results.

1. Scope

1.1 This designation outlines the procedure for determining dispersibility of clayey soils by the pinhole test method.

1.2 Dispersibility, dispersivity, or dispersion refers to the process of clay colloid deflocculation in the presence of water. Deflocculation of clay colloids occurs when the interparticle repulsive forces exceed the attractive forces. These physicochemical forces are very large in relation to the gravity force on the individual clay particles, consequently; physiochemical forces cause the individual particles to go into suspension in the presence of water.

1.3 The pinhole test is a direct, physical, quantitative method for evaluating the dispersibility of clay soils where water flows through a small hole (pinhole) in the soil specimen.

1.4 The dispersion of clay colloids is observed as cloudiness in the discharge effluent.

1.5 For dispersive soils, the measured flow rate increases as the pinhole diameter enlarges until the hydraulic capacity of the equipment has been reached. For nondispersive soils, the measured flow rate remains constant at each head and the pinhole diameter stays the same throughout the test. A detailed analysis of pinhole equipment hydraulic characteristics for dispersive and nondispersive soils is presented in reference [2].[1]

1.6 The pinhole test should be conducted only on soils having more than 12 percent minus 0.005-millimeter particles and with a plasticity index equal to or greater than 8, as determined in accordance with designations USBR 5330, 5350, and 5360. Soils that contain less than 12 percent minus 0.005-millimeter particles, or have a plasticity index less than 8 are generally erodible even if the clay colloids are nondispersive. Pinhole tests conducted on soils not meeting these criteria may show erosion and enlargement of the pinholes; however, that reaction would be generally indicative of mechanical erosion instead of erosion caused by physicochemical dispersion of the clay colloids.

2. Auxiliary Tests

2.1 A test sample must be obtained in accordance with USBR 5205 prior to performing this procedure. The moisture content is determined in accordance with USBR 5300 and the gradation and Atterberg limits are determined in accordance with USBR 5330, 5350, and 5360, all as part of this procedure. For compacted specimens, the laboratory maximum dry unit weight and optimum moisture content must be determined in accordance with USBR 5500 or 5510 or must be estimated prior to performing this procedure.

3. Applicable Documents

3.1 *USBR Procedures*:

USBR 1009 Calibrating Compaction Molds
USBR 1012 Calibrating Balances or Scales
USBR 1020 Calibrating Ovens
USBR 1025 Checking Sieves
USBR 5205 Preparing Soil Samples by Splitting or Quartering
USBR 5215 Preparing Soil Specimens for Laboratory Use From Undisturbed Samples
USBR 5300 Determining Moisture Content of Soil and Rock by the Oven Method
USBR 5330 Performing Gradation Analysis of Fines and Sand Size Fraction of Soils, Including Hydrometer Analysis
USBR 5350 Determining the Liquid Limit of Soils by the One-Point Method
USBR 5360 Determining the Plastic Limit and Plasticity Index of Soils
USBR 5400 Determining Dispersibility of Clayey Soils by the Crumb Test Method
USBR 5405 Determining Dispersibility of Clayey Soils by the Double Hydrometer Test Method

[1] Number in brackets refers to the reference.

USBR 5500 Performing Laboratory Compaction of Soils — 5.5-lbm Rammer and 18.-in Drop
USBR 5510 Performing Laboratory Compaction of Soils — Harvard Miniature

3.2 *ASTM Standard*:
E 11 Specifications for Wire-Cloth Sieves for Testing Purposes

4. Summary of Method

4.1 A 25-millimeter long by 35-millimeter diameter cylindrical soil specimen is secured between two end plates and connected to a constant head tank. The intake end plate has a 1.5-millimeter diameter hole that serves as a centering guide for punching a 1.0-millimeter diameter hole through the 25-millimeter long soil specimen. The 1.0-millimeter diameter hole (the "pinhole" for which the test is named) is made with a 6-inch long (152 mm) No. 60 aircraft extension drill. Water flows through this pinhole under heads of 50, 180, and 380 millimeters, and the flow rate and effluent turbidity are recorded.

4.2 For nondispersive soils, the pinhole diameter remains unchanged throughout the test, the discharge effluent remains clear, and the measured flow rate remains constant at each head.

4.3 For dispersive soils, the pinhole diameter increases throughout the test; the discharge effluent contains visible clay colloids in suspension; and the flow rate (at the 50-millimeter head) increases rapidly during the first 10 minutes of the test.

5. Significance and Use

5.1 The pinhole test has become the generally accepted reference test for identifying dispersive clays.

5.2 Waterflow through the pinhole in the soil specimen simulates the waterflow through a crack in the impervious core of a dam or other structure. The 50-, 180-, and 380-millimeter heads cause flow velocities ranging from approximately 30 to 160 centimeters per second at hydraulic gradients ranging from approximately 2 to 15.

5.3 The pinhole test was originally developed, in part, by using clayey soils selected from field sites with known erodible and erosion resistant characteristics. The results of tests conducted on hundreds of specimens indicate that the pinhole test provides the most reliable correlation with erosional (dispersive) performance of soils in nature. Other indirect tests such as the crumb test (USBR 5400), double hydrometer method (USBR 5405), and soil-pore water cation and zeta potential analyses also have been used as dispersive clay identification tests. The results of those tests are less effective than the pinhole test for identifying dispersive clays.

5.4 The pinhole test has been used sucessfully to identify dispersive and nondispersive soils for selective use in constructing earthen structures.

5.5 The pinhole test is generally used as the control test in research programs for developing new or improved techniques for identifying dispersive soils.

5.6 The pinhole test, as originally developed by Sherard [3], was intended as a qualitative test which emphasized visually observing the discharge effluent. As a result of Bureau research efforts and operating experience, a quantitative evaluation method was developed and documented [2]. The quantitative method emphasizes the measured flow rate as the primary test evaluation criterion. This procedure is adapted from references [2 and 3].

6. Terminology

6.1 Definitions are in accordance with USBR 3900. A term of particular significance is:

6.1.1 *Dispersive Clay.*–Clay colloids that deflocculate in the presence of water because the physicochemical repulsive forces on the particles exceed the attractive forces. Dispersive clay colloids are easily detached from one another, and the individual particles go into suspension in the presence of water.

6.2 Terms not included in USBR 3900 specific to this designation are:

6.2.1 *Turbidity.*–Visual cloudiness in fluid caused by suspended clay colloids.

6.2.2 *Cations.*–Positively charged ions. Calcium (Ca), magnesium (Mg), potassium (K), and sodium (Na) are the major cations available in a soil-water system.

7. Interferences

7.1 The presence of significant amounts of fine- and medium-sized sand particles in the pinhole test specimen can affect the test results. The larger sand particles may not completely pass through the pinhole in the specimen after separating from the surface of the pinhole. When this occurs, the flow rate may be reduced and some excessive local scour erosion may occur along the pinhole at the location where the sand particles were separated and/or deposited. Later in the test, the water velocity at the 180- or 380-millimeter head may be sufficient to move those sand particles and clear up blockages that may have occurred. This phenomenon can be determined only at the conclusion of the test by inspecting the final shape of the eroded pinhole and observing fine- or medium-sized sand accumulated at the downstream end of the specimen in the discharge end plate or on the bottom of the graduate used to collect discharge effluent.

8. Apparatus

8.1 *General Apparatus*:

8.1.1 *Balance or Scale.*–A typical balance or scale used for this designation must be readable to 0.01 g and have a capacity of about 500 g.

8.1.2 *Drying Oven.*–An oven, thermostatically controlled, preferably of the forced-draft type, and capable of maintaining a uniform temperature of 230±9 °F (110±5 °C) throughout the drying chamber.

8.1.3 *Head Tank.*–A glass head tank, about 50-mm inside diameter by 900-mm length. Head tank must be graduated in 1-mm divisions over a minimum length of 400 mm.

8.1.4 *Air Intake Tube.*–An air intake tube, about 5-mm inside diameter by 500-mm length. Air intake tube must be made of glass or straight, rigid plastic tubing.

8.1.5 *Rubber Stopper.*–A rubber stopper having an outside diameter compatible with the inside diameter of the head tank to obtain a secure seal. Rubber stopper must have one hole in center, sized to fit outside diameter of air intake tube.

8.1.6 *Tubing.*–Thick wall plastic or rubber tubing of appropriate inside diameter and length to connect pinhole test assembly to head tank and discharge valving as shown on figure 1.

8.1.7 *Stopwatch.*–A stopwatch or other suitable time device readable to 1 second.

8.1.8 *Graduated Cylinder.*–100-mL capacity, graduated to 1 mL.

8.1.9 *Straightedge.*–A stiff metal straightedge of convenient length. The scraping edge must be beveled if it is thicker than 1/8 inch (3 mm).

8.1.10 *Sieve.*–U.S.A. Standard series No. 4 (4.75 mm) and No. 10 (2.00 mm) sieves conforming to requirements of ASTM E 11.

8.1.11 *Bags.*– 1 quart, moisture proof, plastic.

8.2 *Equipment Unique to This Procedure* (see fig. 1):

8.2.1 *Mold Apparatus.*–Modified Harvard miniature compaction mold stand, collar, pinhole specimen mold, and specimen mold adapter.

8.2.2 *End Plates.*–Intake and discharge end plates with wing nut and bolt assembly.

8.2.3 *Tamper.*–Harvard miniature compaction tamper with 20-pound (6.8-kg) spring.

8.2.4 *Extension Drill.*–A No. 60 aircraft extension drill, minimum length of 6 inches (152 mm) for punching a 1.0 mm diameter hole through the test specimen.

8.3 *Miscellaneous Equipment.*–Mixing pans, spoons, scoop, spatula, etc., for thoroughly mixing the soil sample with water; wood or plastic dowel for leveling loose soil lifts in the pinhole specimen mold; silicone or other lubricant for O-rings and sealing surfaces of molds, end plates, and mold adapter; small brush or broom.

9. Reagents and Materials

9.1 Distilled water should be used for preparing the compacted soil specimen and for performing the pinhole test.

9.2 The use of tapwater or water from other sources is not recommended. It has been shown that distilled water has the greatest potential for exchanging absorbed cations from the clay mineral surfaces [3]. Water having impurities; i.e., water containing cations, anions, and ion pairs in solution, generally will cause a reduced degree of dispersion. The use of distilled water represents the worst case situation for laboratory evaluation of clay soil dispersibility.

10. Precautions

10.1 *Safety Precaution.*–The surface on which the test specimen is prepared must be strong enough to support the compactive effort.

10.2 *Technical Precautions*:

10.2.1 The test specimen should be prepared and compacted as quickly as possible to avoid unrecorded moisture loss.

10.2.2 As nearly as possible, soil used for this test should not be allowed to dry from in-place moisture content. If this is not possible, the sample should be allowed to air dry. Ovendried soil should not be used because of the possible effect on the dispersion potential of some clay minerals.

11. Sampling, Test Specimens, and Test Units

11.1 *Sample Preparation* (compacted specimens).–Obtain a test sample of about 400 grams of minus No. 4 (4.75 mm) soil in accordance with USBR 5205.

NOTE 1.–The 400-grams of soil are required to provide sufficient material for concurrently performing the crumb and double hydrometer tests USBR 5400 and 5405, respectively, in addition to the pinhole test. If the crumb and double hydrometer tests are not required, only 200 grams of minus No. 4 (4.75 mm) soil is needed. USBR 5400, 5405, and 5410 generally constitute the dispersive clay test series.

11.2 *Specimen Preparation* (compacted specimens):

11.2.1 From the 400-gram minus No. 4 (4.75 mm) test sample obtained according to subparagraph 11.1, obtain a test specimen of about 150 grams of minus No. 10 (2.00 mm) soil by splitting or quartering.

11.2.2 All specimen compaction data are to be recorded on the "Pinhole Test Data Sheet 1" as shown on figure 2.

11.2.3 Determine the laboratory maximum dry density and optimum moisture content of soil by performing USBR 5500 or consult the engineer or supervisor in charge for an estimate of these two parameters.

11.2.4 Determine 98 percent of laboratory maximum dry density and moisture content 2 percent dry of optimum moisture content. Record the values as the *Desired dry density* and *Desired moisture content*, respectively as shown on figure 2.

NOTE 2.–Pinhole test specimens are generally compacted at 98 percent of laboratory maximum dry density and 2 percent dry of optimum moisture content. Variation from these criteria may be requested by the engineer.

11.2.5 Determine the moisture content of a representative portion of the 150-gram soil specimen by performing USBR 5300.

11.2.6 If the moisture content of the soil is below that required, calculate the amount of distilled water to be added to the soil specimen to increase the moisture content to the required value.

11.2.7 Allow the moist soil specimen to mellow for a minimum of 16 hours to ensure uniform distribution of water throughout the specimen.

11.2.8 Determine the moisture content of a representative portion of the mellowed 150-gram soil specimen by performing USBR 5300.

11.2.9 Repeat subparagraphs 11.2.6 through 11.2.8 until the measured moisture content is within ±1 percent of the desired moisture content.

11.2.10 Record the calibrated volume of the pinhole specimen mold to be used for compacting the test specimen.

11.2.11 Determine the initial wet mass of soil that is required to achieve the desired placement density in the selected pinhole specimen mold as shown on figure 2.

11.2.12 Divide the total initial wet mass of soil required as obtained in subparagraph 11.2.11 by 5, which is the required number of lifts for preparing the test specimen. The result is the wet mass of soil required for each lift.

11.2.13 Place the specimen container on the scale and determine and record the mass.

NOTE 3.–It is convenient to use a tare mass equal to the mass of the specimen container so that the resulting mass, in grams, is numerically equal to the mass of soil used.

11.2.14 Place the wet mass of soil required, as calculated in subparagraph 11.2.11, into the specimen container. Record the value of wet soil mass and container as shown on figure 2.

11.2.15 Remove the wet mass of soil required for a single lift and place it into the assembled pinhole specimen mold, mold collar, and compaction stand (fig. 1). Record the total mass of moist soil remaining in the container as shown on figure 2 (total mass less each lift).

11.2.16 Level the surface by pressing down lightly with a wood plunger or plastic dowel.

11.2.17 Compact the soil specimen using the Harvard miniature compaction tamper by pressing down firmly until the spring is compressed to the full calibrated load (20 lbf).

11.2.18 Release the load and shift the tamper to a new position.

11.2.19 Each of the first four tamps should be applied in separate quadrants and adjacent to the wall of the mold. The fifth tamp should be in the center of the mold making one complete coverage.

11.2.20 Repeat the cycle outlined in subparagraph 11.2.19 until 25 tamps have been applied. The tamps should be applied at the approximate rate of 1 tamp per second.

11.2.21 It is important to slightly offset the location of the tamps during the compaction effort to ensure even coverage of the specimen surface.

11.2.22 Repeat subparagraphs 11.2.15 through 11.2.21 until five lifts have been placed.

11.2.23 After the final lift is compacted, carefully remove the pinhole specimen mold from the collar and mold assembly.

NOTE 4.–An alternate compaction procedure, adapted from reference [4], may be used. It eliminates determining the mass of soil required for each lift. For this procedure, use 2 slightly heaping teaspoons of soil per lift, with 3 total lifts required, and 25 tamps per lift. The proper amount of soil for each lift may vary with different soils. Additional trials may be required to develop the technique for selecting the proper amount of soil per lift.

11.2.24 Inspect the top of the specimen (the most recently compacted surface) to ensure that the soil completely fills the mold with little or no excess soil.

11.2.25 Carefully trim excess soil from the top of the specimen using a straightedge or fine-tooth hacksaw blade. Brush all soil from the mold surfaces.

11.2.26 Determine and record the mass of the specimen and mold. Calculate the actual wet density by dividing the wet soil mass by the calibrated mold volume. Calculate the actual dry density. If the actual placement dry density is within ±2 lbm/ft³ of the desired dry density (usually 98 percent laboratory maximum), retain the test specimen. If the actual placement dry density is not within the allowable variation, the specimen must be rejected and another specimen prepared in accordance with subparagraphs 11.2.13 through 11.2.25, using more or less tamps per lift as the situation dictates.

11.2.27 Record the actual dry density and actual dry soil mass, the number of blows per lift, and the number of lifts as shown on figure 2.

11.2.28 Place the top of the specimen (the most recently compacted surface) and mold in the intake end plate. Close the assembly using the bolts and wing nuts. Alternately and lightly tighten each wing nut making the end plates close evenly. The watertight seal is maintained by the O-ring seals in the end plates, not the torque on the wing nuts.

11.3 *Sample Preparation* (undisturbed specimens).–Process the sample in accordance with USBR 5215.

11.4 *Specimen Preparation* (undisturbed specimens):

11.4.1 Prepare the specimen in accordance with USBR 5215

11.4.2 Record the calibrated volume of the pinhole specimen mold used.

11.4.3 Place the specimen container on the scale and determine and record the mass (see note 3).

11.4.4 Calculate and record the dry density obtained as shown on figure 2.

11.4.5 Place the specimen and mold in the intake end plate and press on the discharge end plate. Close the assembly using the bolts and wing nuts. Alternately and lightly tighten each wing nut making the end plates close evenly. The watertight seal is maintained by the O-ring seals in the end plates—not the torque on the wing nuts.

12. Calibration and Standardization

12.1 Verify that equipment is currently calibrated in accordance with the applicable calibration procedure. If the calibration is not current, perform the calibration before using the equipment for this procedure.

USBR 1012 Calibrating Balances or Scales
USBR 1020 Calibrating Ovens
USBR 1025 Checking Sieves

12.2 Calibrate the Harvard miniature compaction tamper in accordance with the calibration procedure outlined in USBR 5510.

13. Conditioning

13.1 Allow the soil prepared in accordance with subparagraph 11.2 for a compacted specimen to mellow for

a minimum of 16 hours after mixing with water to ensure uniform distribution of water throughout the specimen.

14. Procedure

14.1 All data are to be recorded on the pinhole test forms as shown on figures 2 through 6.

14.2 Carefully punch the pinhole through the specimen, from the intake end plate completely through to the discharge end plate, using a No. 60 (1.0-mm diameter) 6-inch long (152-mm) drill. When the drill appears through the discharge end plate, pull it completely through using pliers in one slow continuous motion to ensure that a uniform, 1.0-millimeter diameter pinhole is obtained.

NOTE 5.–Occasionally, the path of the drill is changed by sand particles so that it hits the face of the discharge end plate. When this occurs, do not force the drill. Remove the discharge end plate and carefully pull the drill through the specimen using pliers, and reattach the discharge end plate. If the end of the specimen is disturbed or if a large amount of material is dislodged from around the hole, discard the specimen.

14.3 Close the outlet valve of the constant head tank, fill with distilled water, and secure the rubber stopper that holds the head vent tube in the top of the tank.

14.4 Connect the constant head tank outlet to the intake end plate. Connect the standpipe tube to the vent in the intake end plate. Secure the assembled end plates and mold in the horizontal position.

14.5 Open the bleed valve in the head tank outlet line until air just begins to enter the head tank through the bottom of the air intake tube.

14.6 Start the test by slowly opening the head tank outlet valve and raising the position of the head tank until the headwater reaches the 50-millimeter mark on the standpipe tube.

14.7 Record the time at the start of the test as shown on figures 3 and 5.

14.8 Measure the flow rate in milliliters per second using a 100-milliliter graduate and a stopwatch. Collect the effluent for consecutive 60-second intervals, record the amount of effluent collected in milliliters and divide by 60 to determine milliliters per second.

14.9 Observe the turbidity (cloudiness) of the effluent and record for each 60-second interval throughout the duration of the test as either dark, cloudy, slightly cloudy, or clear. Observe the effluent through the side of the graduate and from the top of the graduate. Clear effluent can only be judged from the top view.

NOTE 6.–If the flow does not begin at the start of the test or if flow stops during the test, stop the test; close the head tank outlet valve, remove the assembled apparatus, repunch the pinhole, and continue the test.

14.10 Continue the test for 5 minutes at the 50-millimeter head. If the effluent is dark or cloudy, and flow rates have gradually increased to 1.0 to 1.4 milliliters per second, the test is complete and is terminated.

14.10.1 Dismantle the apparatus and determine the final size of the enlarged pinhole by either extruding the specimen and splitting it longitudinally or observing the pinhole from each end.

14.10.2 Classify the soil as dispersive, D1. Proceed to procedure paragraph 15.

14.11 If the effluent at the 50-millimeter head is dark, cloudy, slightly cloudy, or clear at the end of 5 minutes and the flow rate is less than 1.0 milliliter per second, continue the test for an additional 5 minutes at the 50-millimeter head.

14.11.1 If the effluent at the 50-millimeter head for the second 5 minute interval is dark, cloudy, or slightly cloudy, and the flow rate has increased to 0.80 to 1.4 milliliters per second, the test is complete and is terminated.

14.11.2 Dismantle the apparatus and determine the final size of the enlarged pinhole by either extruding the specimen and splitting it longitudinally, or observing the pinhole from each end.

14.11.3 Classify the soil as dispersive, D2, if the flow rate is 1.0 to 1.4 milliliters per second. Classify the soil as intermediate, ND4, if the flow rate is 0.80 to 1.0 milliliters per second. Proceed to procedure paragraph 15.

14.12 If the effluent at the 50-millimeter head is clear or slightly cloudy after 10 minutes and the flow rate is 0.20 to 0.80 milliliter per second, raise the head to 180 millimeters and continue the test for an additional 5 minutes.

14.12.1 If the effluent at the 180-millimeter head is cloudy or slightly cloudy after 5 minutes, the flow rate has increased to 1.2 to 2.8 milliliters per second, the test is complete and is terminated.

14.12.2 Dismantle the apparatus and determine the final size of the enlarged pinhole by either extruding the specimen and splitting it longitudinally or observing the pinhole from each end.

14.12.3 Classify the soil as intermediate, ND4, if the flow rate is 2.0 to 2.8 milliliters per second. Classify the soil as intermediate, ND3, if the flow rate is 1.2 to 2.0 milliliters per second. Proceed to procedure paragraph 15.

14.13 If the effluent at the 180-millimeter head is clear or slightly cloudy and the flow rate is 0.6 to 1.2 milliliters per second after 5 minutes of flow, raise the head to 380 millimeters and continue the test for an additional 5 minutes.

14.14 The test is complete and is terminated after 5 minutes of testing at the 380-millimeter head.

14.14.1 Dismantle the apparatus and determine the final size of the pinhole by either extruding the specimen and splitting it longitudinally or observing the pinhole from each end. Note final turbidity of effluent.

14.14.2 Classify the soil as nondispersive, ND1, if the flow rate is 0.80 to 1.6 milliliters per second. Classify the soil as nondispersive, ND2, if the flow rate is 1.6 to 2.4 milliliters per second. Classify the soil as nondispersive, ND3, if the flow rate is 2.4 to 3.2 milliliters per second.

14.15 See table 1, "Pinhole Test Summary," for a summary of the flow rates and corresponding decisions for classification or continuation of the test.

14.16 Determine the mass of dry soil and record the value in the Pinhole Enlargement section of the data form as shown on figure 2.

14.17 Calculate and record the percent pinhole enlargement by dry soil mass as shown on line 22, figure 2.

15. Interpretation of Results

15.1 For each 60-second flow measurement interval, record:

- Effluent turbidity
- Volume of water collected (milliliters)
- Calculate the flow rate (milliliters per second)
- Plot the flow rate versus time (figs. 4 and 6)
- Sketch or photograph the specimen pinhole with the specimen still in the specimen mold or extruded and split the specimen longitudinally

16. Report

16.1 The report is to consist of completed and checked pinhole test data forms. Examples of appropriate data forms are shown on figures 2 through 6.

16.2 All calculations are to show a checkmark and all plotting must be checked.

17. References

[1] Kinney, James L., *Laboratory Procedures for Determining the Dispersibility of Clayey Soils*, Bureau of Reclamation Report No. REC-ERC-79-10, pp. 1-8, Denver Colorado, 1979.

[2] Acciardi, Raymond G., *Quantification of Pinhole Test Equipment Hydraulic Characteristics*, Bureau of Reclamation Report No. REC-ERC-82-15, 73 pp., Denver, Colorado, September 1982.

[3] Sherard, James L., et al., "Pinhole Test for Identifying Dispersive Soils," *Journal of the Geotechnical Division*, ASCE, vol. 102, No. GT1, Proceedings Paper No. 11846, pp. 69-85, January 1976.

[4] *Operating Instructions for Harvard Miniature Compaction Apparatus, Model No. CN-435*, Soiltest, Inc., Chicago, Illinois, May 1977.

17.1 *Background Reference*:

Acciardi, Raymond G., "Improvement to USBR Pinhole Test Equipment Design and Test Result Evaluation," Dam Safety and Rehabilitation, United States Committee on Large Dams, *4th Annual USCOLD Lecture*, pp. 6-1 through 6-87, January 1984.

Table 1. – Pinhole test summary.

Head, mm	Total time interval at head, min	Flow rate at head, mL/s	Effluent appearance	Action required	Dispersive classification
50	5	< 1.0	Dark to clear	Continue at 50-mm head	- -
50	5	1.0 to 1.4	Dark to cloudy	Terminate	D1
50	10	0.2 to 0.8	Clear to slightly cloudy	Raise head to 180 mm	- -
50	10	0.8 to 1.4	Dark to slightly cloudy	Terminate	D2 (1.0 to 1.4) ND4 (0.8 to 1.0)
180	5	0.6 to 1.2	Clear to slightly cloudy	Raise head to 380 m	- -
180	5	1.2 to 2.8	Clear to slightly cloudy	Terminate	ND3 (1.2 to 2.0) ND4 (2.0 to 2.8)
380	5	0.8 to 2.4	Clear to slightly cloudy	Terminate	ND1 (0.8 to 1.6) ND2 (1.6 to 2.4)
380	5	2.4 to 3.2	Dark to cloudy	Terminate	ND3

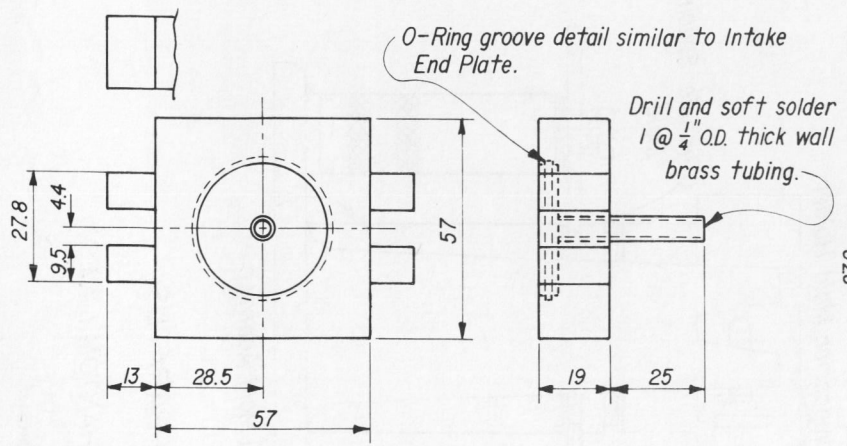

DISCHARGE END PLATE

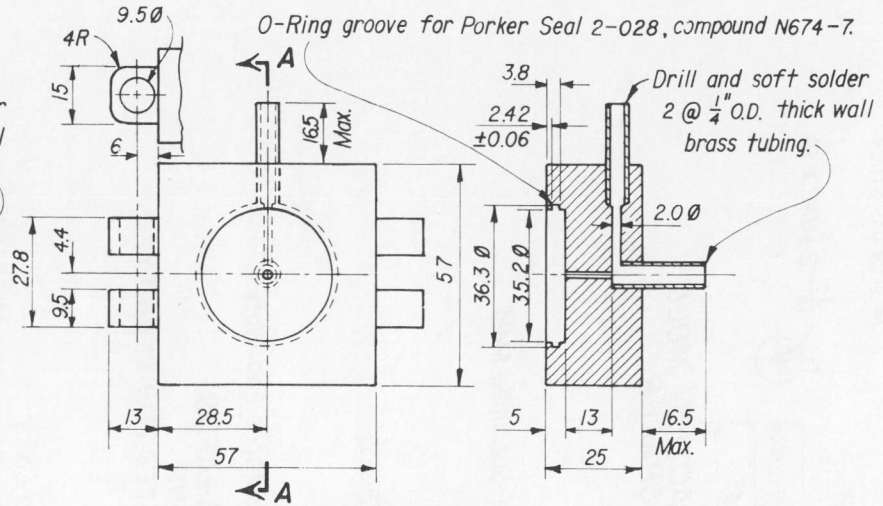

INTAKE END PLATE

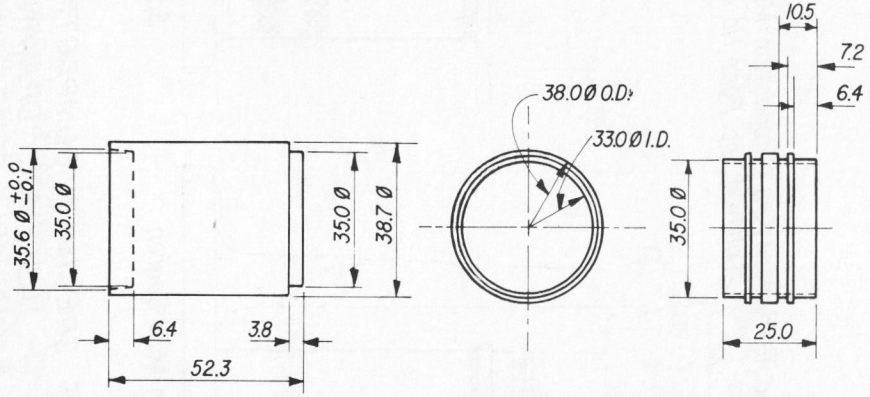

SPECIMEN MOLD ADAPTER PINHOLE SPECIMEN MOLD

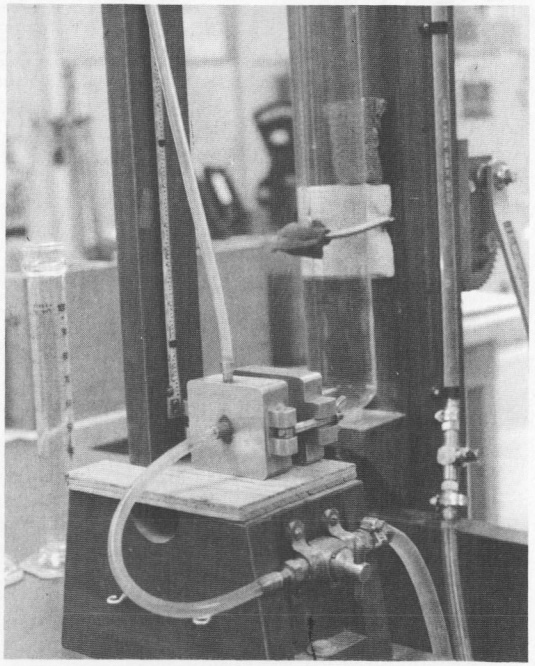

NOTES:

1. All dimensions are in millimeters.
2. Ø Indicates diameter.
3. Stainless Steel stock required for Specimen Mold Adapter and Pinhole Specimen Mold.
4. Brass stock required for Intake End Plate and Discharge End Plate.
5. Specimen Mold Adapter is designed for use with Soiltest, Inc. Part No. CN428, Mold Holder. The adapter allows the Standard Harvard Miniature Compaction Mold Holder (CN428) to be used with the U.S.B.R. Pinhole Specimen Mold.

Figure 1. - USBR Pinhole test apparatus.

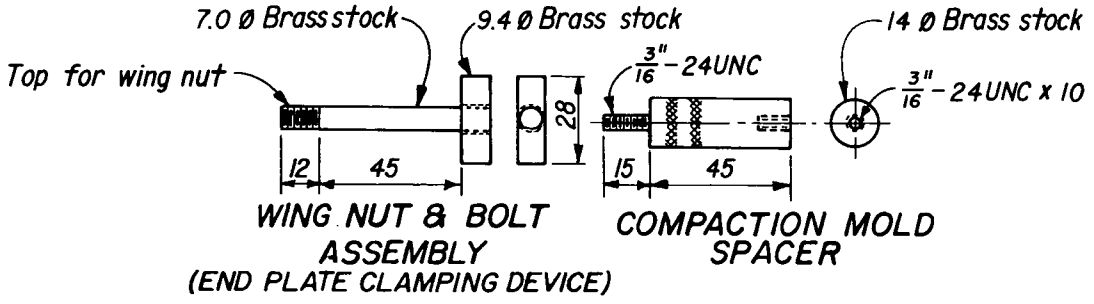

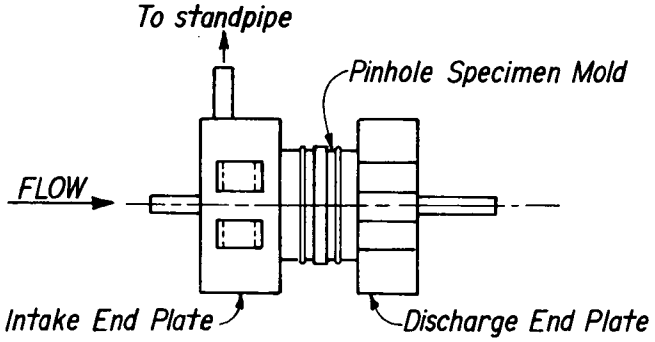

PINHOLE TEST APPARATUS
ASSEMBLY DRAWING
(WING NUT & BOLT ASSEMBLY OMITTED FOR CLARITY)

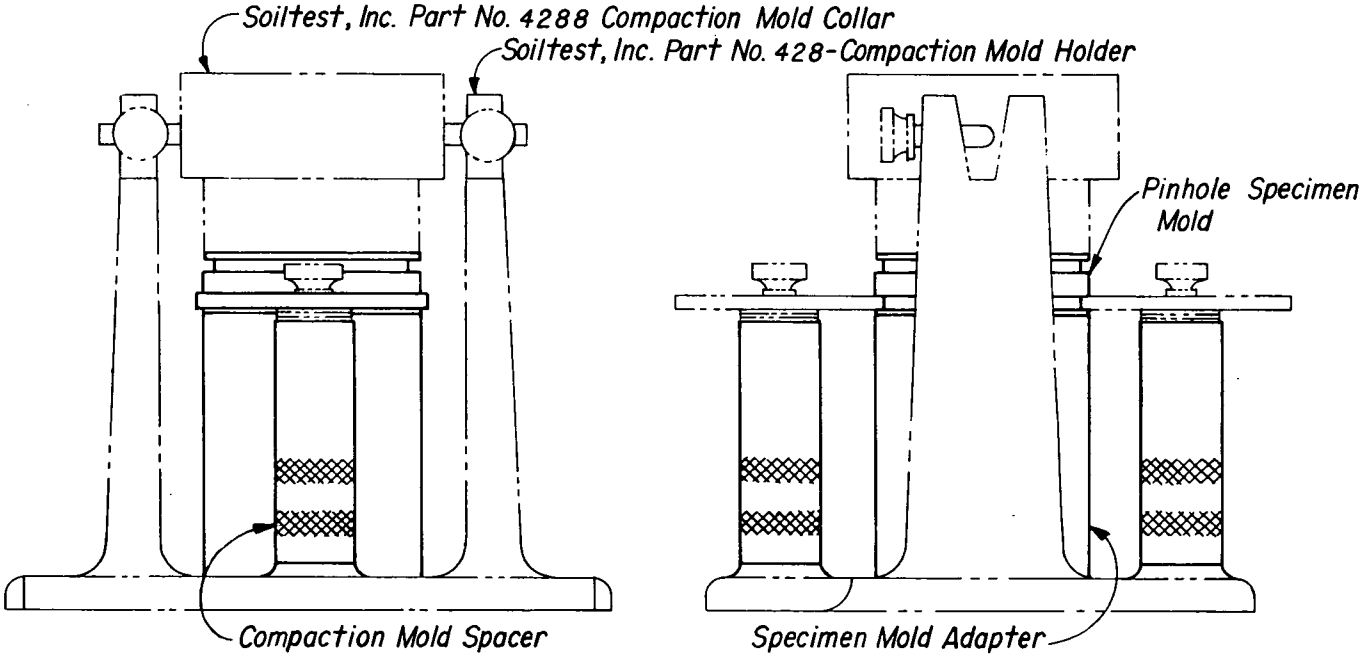

PINHOLE SPECIMEN COMPACTION APPARATUS
ASSEMBLY DRAWING
(COMMERCIALLY AVAILABLE ITEMS SHOWN IN PHANTOM LINES)

Figure 1. – USBR Pinhole test apparatus — Continued.

7-2363 (9-86)
Bureau of Reclamation

PINHOLE TEST DATA SHEET 1

Designation USBR 5410-89

PROJECT: Example	FEATURE: Example
SAMPLE NO.: 18W-10	SPECIMEN NO.: 8
TESTED BY / DATE	COMPUTED BY / DATE
CHECKED BY / DATE	
MOLD NO.: 19	MOLD VOLUME (a): 21.77 cm3
MOLD MASS: 28.98 g	

COMPACTION DATA FOR COMPACTED SPECIMENS

1. Desired dry density (110.0 lbm/ft3 X 0.01602) = g/cm3	1.762	g/cm3
2. Desired moisture content	15.0	%
3. Initial dry mass of soil = (1) X (a)	38.36	g
4. Initial wet mass of soil = (3) X [1 + ((2) / 100)]	44.11	g
5. Blows per lift	25	
6. Number of lifts*	5	
7. Wet soil mass required per lift = (4) / (6)	8.82	g
8. Mass of container	160.45	g
9. Wet soil mass + container = (4) + (8)	204.56	g
10. Total mass less each lift (i)	195.74	g
(ii)	186.92	g
(iii)	178.10	g
(iv)	169.28	g
(v)	160.46	g

*Typically 5 lifts are used

ACTUAL DENSITY OF COMPACTED OR UNDISTURBED SPECIMEN

11. Wet soil mass + mold	73.08	g
12. Mass of mold	28.98	g
13. Mass of wet soil	44.10	g
14. Actual wet density	2.026	g/cm3
15. Actual dry density	1.769	g/cm3
16. Actual dry soil mass = (15) X (a)	38.51	g

Remarks: Actual moisture content (USBR 5300) of 14.5%.

PINHOLE ENLARGEMENT

17. Dish no.	CL-18	
18. Dish mass	170.83	g
19. Dry soil mass + mold + dish	237.28	g
20. Mass of mold + dish	199.81	g
21. Final dry soil mass	37.47	g
22. % enlargement [((16) - (21)) / (16)] X 100	2.7	%

Cross section of specimen

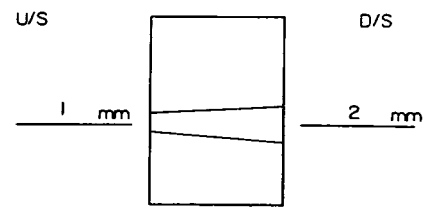

(L7-2)

Figure 2. - Pinhole test data sheet 1 — example.

7-2364 (9-86) Bureau of Reclamation	PINHOLE TEST DATA SHEET 2	Designation USBR 5410-89
PROJECT Example	FEATURE Example	
SAMPLE NO. 18W-10	SPECIMEN NO. 8D	
TESTED BY DATE	COMPUTED BY DATE	CHECKED BY DATE

TIME	HEAD	FLOW RATE			TURBIDITY*
	mm	ml	s	ml/s	
10:00	50	14	60	0.23	SC
		20	60	0.33	SC
		37	60	0.62	SC
		49	60	0.82	SC
		58	60	0.97	SC
		68	60	1.13	SC
		69	60	1.15	SC
		69	60	1.15	SC
		68	60	1.13	SC
		70	60	1.17	SC

*TURBITY SYMBOLS: C = CLEAR SC = SLIGHTLY CLOUDY CL = CLOUDY D = DARK

Figure 3. – Pinhole test data sheet 2 (dispersive soil) — example.

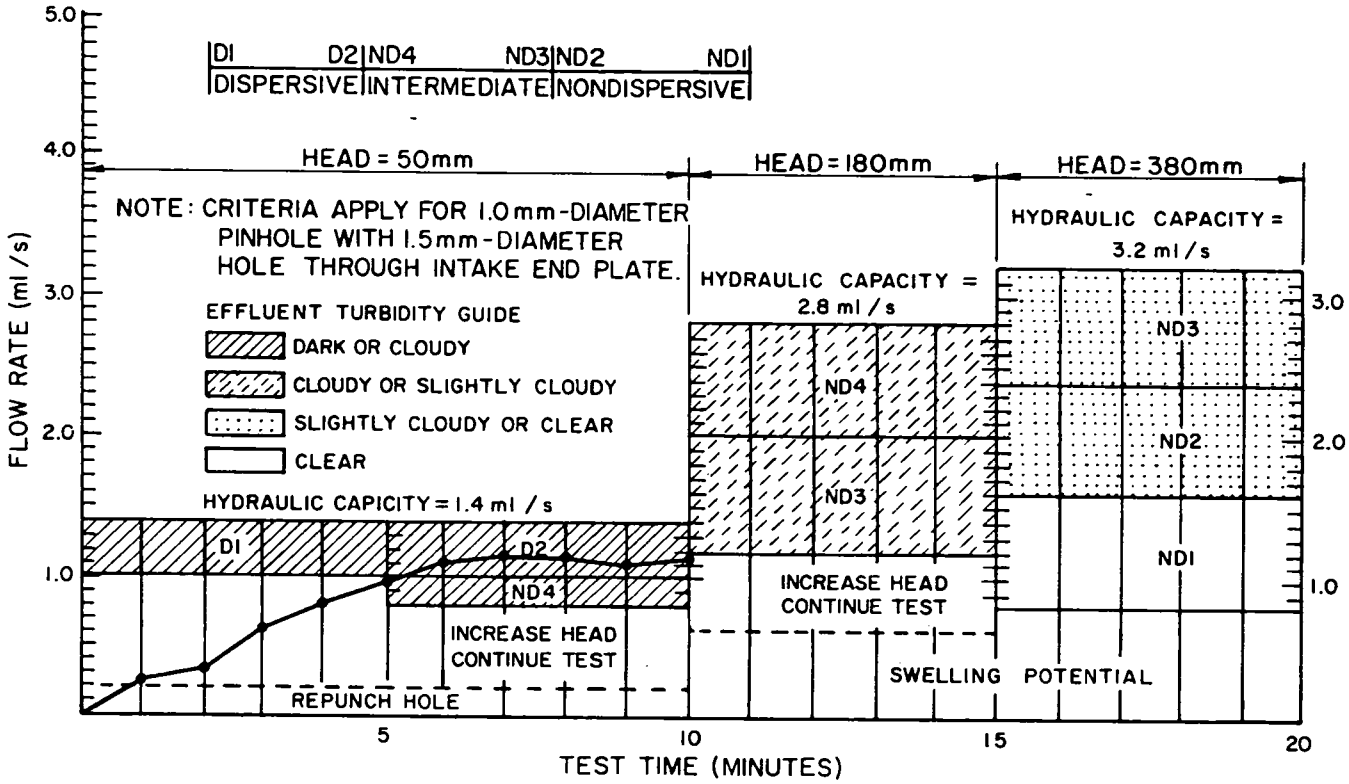

DISPERSIVE GRADE VS FLOW RATE

SAMPLE NUMBER	PLACEMENT CONDITIONS		DISPERSIVE GRADE CLASSIFICATION
	DRY DENSITY	MOISTURE CONTENT	
18W-10	110.4 lbm/ft³	14.5	D2

Figure 4. – Pinhole test — dispersive grade versus flow rate (dispersive soil).

7-2364 (9-86) Bureau of Reclamation	PINHOLE TEST DATA SHEET 2			Designation USBR 5410-89
PROJECT Example		FEATURE Example		
SAMPLE NO. 18W-10		SPECIMEN NO. 8ND		
TESTED BY DATE		COMPUTED BY DATE		CHECKED BY DATE

TIME	HEAD	FLOW RATE			TURBIDITY*
	mm	ml	s	ml/s	
11:15	50	21	60	0.35	C
		21	60	0.35	C
		21	60	0.35	C
		21	60	0.35	C
		21	60	0.35	C
		21	60	0.35	C
		21	60	0.35	C
		21	60	0.35	C
		21	60	0.35	C
		21	60	0.35	C
	180	47	60	0.78	C
		50	60	0.83	C
		50	60	0.83	C
		51	60	0.85	C
		51	60	0.85	C
	380	86	60	1.4	C
		82	60	1.4	C
		82	60	1.4	C
		82	60	1.4	C
		82	60	1.4	C

*TURBITY SYMBOLS: C = CLEAR SC = SLIGHTLY CLOUDY CL = CLOUDY D = DARK

Figure 5. – Pinhole test data sheet 2 (nondispersive soil) — example.

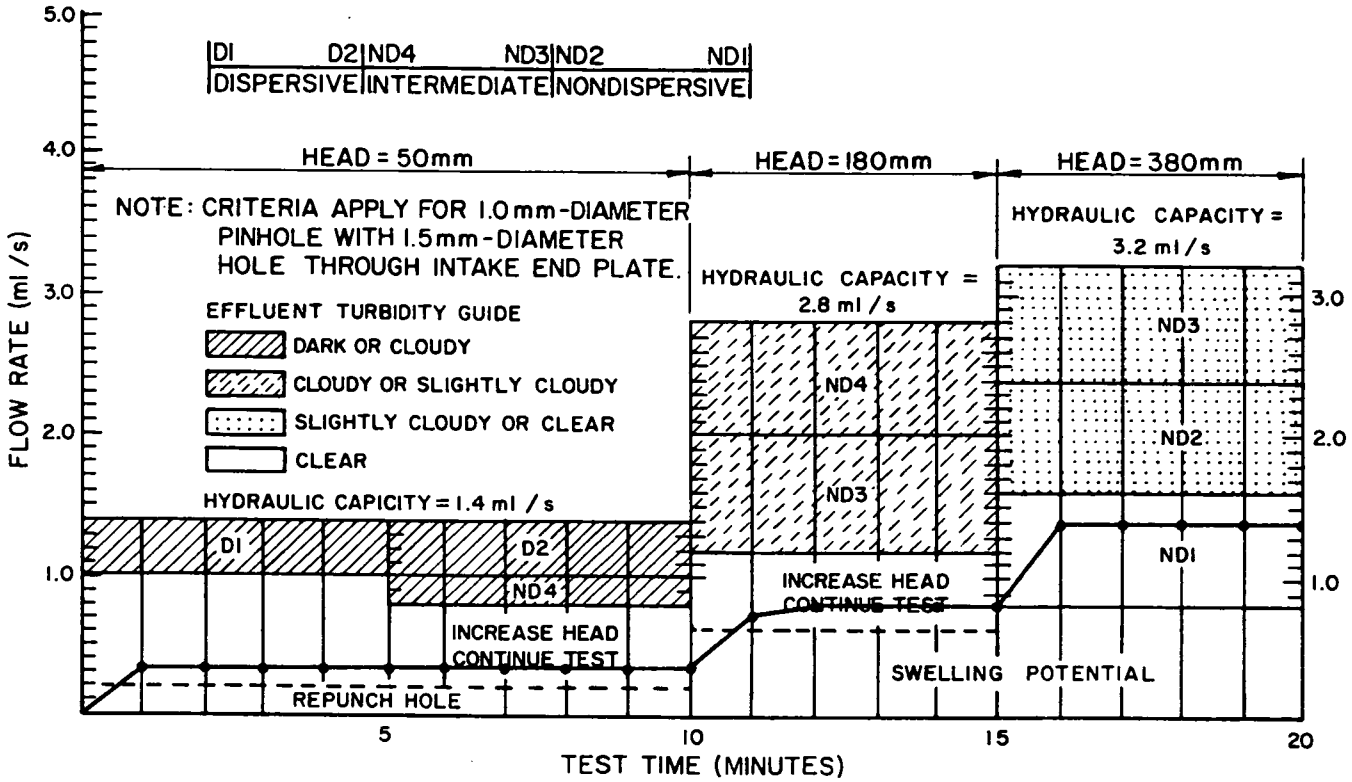

DISPERSIVE GRADE VS FLOW RATE

SAMPLE NUMBER	PLACEMENT CONDITIONS		DISPERSIVE GRADE CLASSIFICATION
	DRY DENSITY	MOISTURE CONTENT	
10W-10	110.4 lbm/ft³	14.1	ND1

Figure 6. - Pinhole test — dispersive grade versus flow rate (nondispersive soil).

UNITED STATES DEPARTMENT OF THE INTERIOR
BUREAU OF RECLAMATION

USBR 5430-89

PROCEDURE FOR

DETERMINING MOISTURE, ASH, AND ORGANIC CONTENT OF SOIL

INTRODUCTION

This procedure is under the jurisdiction of the Geotechnical Services Branch, code D-3760, Research and Laboratory Services Division, Denver Office, Denver, Colorado. The procedure is issued under the fixed designation USBR 5430. The number immediately following the designation indicates the year of acceptance or the year of last revision.

1. Scope

1.1 This designation outlines the procedure for determining the moisture, ash, and organic content of a soil by the loss-on-ignition method.

2. Auxiliary Tests

2.1 A test sample must be prepared in accordance with USBR 5205 prior to performing this procedure.

3. Applicable Documents

3.1 *USBR Procedures*:
USBR 1020 Calibrating Ovens
USBR 3900 Standard Definitions of Terms and Symbols Relating to Soil Mechanics
USBR 5000 Determining Unified Soil Classification (Laboratory Method)
USBR 5205' Preparing Soil Samples by Splitting or Quartering
3.2 *ASTM Standard*:
D 2974 Test Methods for Moisture, Ash, and Organic Matter of Peat and Other Organic Soils

4. Summary of Method

4.1 The moisture content of a soil surmised to contain organic matter is obtained by ovendrying a specimen of the soil at 230±9 °F (110±5 °C). The ovendried soil specimen is then placed in a muffle furnace, and the organic matter is burned off by high temperature ignition at 440 °C. The ash content and the organic content are calculated.

5. Significance and Use

5.1 Organic content is used to supplement the soil classification determined by USBR 5000 and to assist in identifying soils classified as inorganic, organic, or peat.

6. Terminology

6.1 Definitions are in accordance with USBR 3900. Terms of particular significance are:

6.1.1 *Moisture Content* (w, %).–The ratio expressed as a percentage of: (1) the mass of water in a given soil mass, to (2) the mass of solid particles (ASTM definition).

6.1.2 *Organic Soil.*–Soil with a high organic content. In general, organic soils are very compressible and have poor load-sustaining properties (ASTM).

6.2 Terms not included in USBR 3900 specific to this procedure are:

6.2.1 *Ash Content.*–The ratio expressed as a percentage of: (1) the mass of ash (and mineral impurities such as sand) residue remaining after organic matter is burned off by high temperature ignition, to (2) the mass of dry solid particles prior to ignition.

6.2.2 *Organic Content.*–The ratio expressed as a percentage of: (1) the organic matter burned off by high temperature ignition, to (2) the mass of dry solid particles prior to ignition.

7. Apparatus

7.1 *Balance or Scale.*–A typical balance or scale used for this designation must be readable to 0.001 g and have a capacity of about 200 g.

7.2 *Drying Oven.*–An oven, thermostatically controlled, preferably of the forced-draft type, and capable of maintaining a uniform termperature of 230±9 °F (110±5 °C) throughout the drying chamber.

7.3 *Muffle Furnace.*–A muffle furnace, thermostatically controlled and capable of maintaining a uniform temperature of approximately 440 °C with emergency shut-down valve.

7.4 *Evaporating Dish.*–High silica, or porcelain, not less than 75-mL capacity, or other suitable container with heavy duty aluminum foil cover.

7.5 *Miscellaneous Equipment.*–Tongs, porcelain pan, spoons, spatula, etc.

8. Precautions

8.1 *Safety Precautions*:

8.1.1 This designation may involve hazardous materials, operations, and equipment.

8.1.2 Safety precautions should be observed to avoid burns associated with the use of the oven and muffle furnace and the use of the specimen and container.

8.2 *Technical Precautions.*–When the specimen is removed from the oven or muffle furnace, it should be covered to preclude absorption of moisture from the air as the specimen cools.

9. Sample, Test Specimens, and Test Units

9.1 *Sample Preparation.*–Prepare a test sample of 100 to 200 grams in accordance with USBR 5205.

9.2 *Specimen Preparationn*:

9.2.1 Mix the sample thoroughly. If the sample appears homogeneous, obtain a 10- to 12-gram test specimen. If the sample does not appear homogeneous, the 10- to 12-gram test specimen should be obtained by either splitting or quartering.

9.2.2 Crush soft lumps with a spoon or spatula.

9.2.3 Protect specimens from moisture loss.

10. Calibration and Standardization

10.1 Verify that equipment is currently calibrated in accordance with the applicable calibration procedure. If the calibration is not current, perform the calibration before using the equipment for this procedure.

10.2 Calibrate the muffle furnace in accordance with USBR 1020 and procedures contained in the muffle furnace operator's manual.

11. Conditioning

11.1 The sample and specimen must be protected from moisture loss prior to performing the test. Plastic bags or containers with lids are sufficient.

12. Procedure

12.1 All data are to be recorded on the "Moisture, Ash, and Organic Content Test" form as shown on figure 1.

12.2 Determine the moisture content of the specimen.

12.2.1 Determine and record the mass of the dish and the fitted, heavy-duty aluminum cover to the nearest 0.001 g.

12.2.2 Place the specimen in the dish, and determine the mass of the test specimen and dish with cover to the nearest 0.001 g and record.

12.2.3 Remove the cover, and place the dish with the specimen in a drying oven maintained at 230±9 °F (110±5 °C). Dry for a minimum of 16 hours or to a constant mass.

12.2.4 After the material has dried to constant mass, remove the dish from the oven, cover tightly with the foil cover, allow to cool, and determine and record the mass to the nearest 0.001 g.

NOTE 1.–Cooling in a desiccator is recommended since it prevents absorption of moisture from the atmosphere during cooling.

12.2.5 Calculate the moisture content of the specimen to the nearest 0.1 percent and record.

12.3 Determine ash and organic content of the specimen.

12.3.1 Remove the cover from the dish containing the dried test specimen used in the moisture content determination and place the dish with the specimen in a muffle furnace. In accordance with equipment operating manual, bring the muffle furnace to 440 °C and hold constant for 2 hours or until the specimen has a constant mass.

NOTE 2.–Ignition at 440 °C may give incorrect results. See appendix XI.

12.3.2 Cover the dish and specimen with the foil cover, allow to cool, and determine the mass of the dish, cover, and ash, to the nearest 0.001 g and record.

12.3.3 Calculate and record the ash content to the nearest 0.1 percent.

12.3.4 Calculate and record the organic content to the nearest 0.1 percent.

13. Calculations

13.1 Calculate the moisture content.

$$w = 100 \left(\frac{A - B}{B - C}\right) \quad (1)$$

where:

w = percent of moisture in the specimen, %
A = mass of dish, cover, and wet soil, g
B = mass of dish, cover, and dried soil, g
C = mass of dish and cover, g
100 = convert from decimal to percent

13.2 Calculate the percent ash.

$$E = 100 \left(\frac{D - C}{B - C}\right) \quad (2)$$

where:

D = mass of dish, cover, and ash, g
E = percent of ash, %
100 = convert from decimal to percent

13.3 Calculate the percent organic matter.

$$\text{Organic matter, \%} = 100 - E \quad (3)$$

14. Report

14.1 The report is to consist of a completed and checked "Moisture, Ash, and Organic Content Test" form (fig. 1).

14.2 All calculations are to show a checkmark.

7-2331(11-85) Bureau of Reclamation	MOISTURE, ASH, AND ORGANIC CONTENT TEST		Designation USBR 5430 - 89
SAMPLE NO. 18M-9	PROJECT Example		FEATURE Example
TESTED BY DATE	COMPUTED BY DATE		CHECKED BY DATE

SPECIMEN NO.			
MOISTURE CONTENT DETERMINATIONS			
(1) Dish No.	26		
(2) Mass of dish, cover, and wet soil (g)	26.420		
(3) Mass of dish, cover, and dry soil (g)	21.568		
(4) Mass of dish and cover (g)	15.122		
(5) Mass of water (2) - (3) (g)	4.852		
(6) Mass of dry soil (3) - (4) (g)	6.446		
(7) Moisture content $\frac{(5)}{(6)}$ (%)	75.3		
ASH AND ORGANIC CONTENT DETERMINATION			
(8) Mass of dish, cover, and ash (g)	18.300		
(9) Mass of dish and cover (4) (g)	15.122		
(10) Mass of ash residue (8) - (9) (g)	3.178		
(11) Ash content $\frac{(10)}{(6)} \times 100$ (%)	49.3		
(12) Organic content 100 - (11) (%)	50.7		

REMARKS: _____

AUXILIARY TEST:
USBR 5205 - 89

GPO 849 - 320

Figure 1. - Moisture, ash, and organic content test — example.

APPENDIX

X1. SELECTION OF TEMPERATURE FOR ORGANIC CONTENT DETERMINATION

X1.1 The test for organic content basically involves heating a soil to a high temperature and assuming that the resulting loss in mass is due to organic matter being burned off. There are many variations of this test method with wide differences in the required temperature and the length of heating time. The temperatures used range from 375 to 950 °C and the heating time from 1 to 8 hours.

X1.2 The various temperatures used result from the fact that temperatures high enough to ignite the organic particles also affect the inorganic material. Opinions differ as to the best temperature to obtain "organic content." Above 105 °C, the surface hydration water for clay minerals is driven off. The temperature that affects the surface hydration water varies with the clay mineral. Carbonates can be decomposed with temperatures above 105 °C. The clay mineral montmorillonite has large amounts of absorbed moisture that can be driven off by heat in the temperature range used to determine organic content.

X1.3 The Petrography Laboratory at the Bureau's Denver Office uses 400 °C to determine the percent organic content. The value of 440 °C was selected for this procedure because that is the temperature used in ASTM D 2974 procedure for defining peat. If the amount of organic matter is of critical concern, then tests should be performed at various temperatures to evaluate temperature effect on the soil.

UNITED STATES DEPARTMENT OF THE INTERIOR
BUREAU OF RECLAMATION

USBR 5450-89

PROCEDURE FOR

DETERMINING WATER SOLUBLE SOLIDS IN SOILS

INTRODUCTION

This procedure is under the jurisdiction of the Geotechnical Services Branch, code D-3760 and the Applied Sciences Branch, code D-3740, Research and Laboratory Services Division, Denver Office, Denver, Colorado. The procedure is issued under fixed designation USBR 5450. The number immediately following the designation indicates the year of acceptance or the year of last revision.

1. Scope

1.1 This designation outlines a procedure for determining the amount of water soluble solids in soil.

2. Auxiliary Tests

2.1 A soil sample must be prepared in accordance with USBR 5205 prior to performing this procedure.

3. Applicable Documents

3.1 *USBR Procedures*:
USBR 3900 Standard Definitions of Terms and Symbols Relating to Soil Mechanics
USBR 5205 Preparing Soil Samples by Splitting or Quartering
3.2 *ASTM Standards*:
D 1125 Standard Test Methods for Electrical Conductivity and Resistivity of Water
E 1 Specification for ASTM Thermometers

4. Summary of Method

4.1 Distilled water is mixed with soil and agitated frequently over a period of 4 days to extract water soluble solids from soil. The solution containing the dissolved solids is separated from the soil-water mixture by filtration and a portion is evaporated to obtain a dry residue. The percent water soluble solids in soil is determined from the mass of the dry residue.

5. Significance and Use

5.1 Water soluble soil minerals, referred to as "water soluble solids," may be dissolved and transported by flowing water from exposed soil. The resulting reduction in soil volume may allow compression of the soil and subsidence of the ground surface. Additionally, where removal of soil material occurs by solutioning of solids by water, soil pore spaces are increased which may allow more water to flow through the soil.

5.2 The method presented does not predict actual field soil performance due to leaching by water. However, the percent of water soluble solids in soils under test conditions may indicate potential for compression, leaching, and subsidence of soils in contact with water.

5.3 Chemical components of soils (such as trace metals, sulfates, and chlorides which dissolve in water) may be determined from solutions prepared by this method.

6. Terminology

6.1 Definitions are in accordance with USBR 3900.
6.2 Terms not included in USBR 3900 specific to this designation are:
6.2.1 *Conductance.*–A measure of the ability to conduct an electrical current in siemans, S. For this designation, conductance is measured in microsiemans, μS.
6.2.2 *Conductivity.*–Specific conductance, which is a measure of the ability of an aqueous solution to carry an electrical current between two conductors of a given surface area and distance apart, at a specified temperature, expressed in microsiemans per centimeter, μS/cm.

7. Apparatus

7.1 *Sample Preparation Apparatus.*–Sample splitter.
7.2 *Extraction Apparatus*:
7.2.1 *Pan Balance.*–A balance that is readable to 0.1 g and has a capacity of about 1200 g.
7.2.2 *Graduate.*–500-mL capacity, readable to 5 mL.
7.2.3 *Flask.*–500-mL Erlenmeyer flask with rubber stopper.
7.2.4 *Flask.*–500-mL capacity vacuum filtration flask.
7.2.5 *Paper.*–Filter paper, 20 to 25 μm particle retention; 7-, 9-, or 11-cm diameter, having high wet strength for vacuum filtration.
7.2.6 *Funnel.*–Buchner type porcelain filtering funnel with flask adapter; 83-, 100-, or 126-mm diameter (to fit filter size selected).
7.2.7 *Vacuum.*–Vacuum source or water aspirator device.
7.2.8 *Bottle.*–1000-mL capacity, glass-stoppered glass bottle.
7.3 *Apparatus for Drying the Extract Solution*:
7.3.1 Porcelain evaporating dish, 75-mL capacity.

7.3.2 An analytical balance readable to 0.0001 g having a capacity of about 200 g.

7.3.3 Steam-heated or low-temperature electric hot plate.

7.3.4 Desiccator (containing anhydrous calcium sulfate).

7.3.5 Convection oven set at 105±5 °C.

7.4 *Apparatus for Measuring Conductance*:

7.4.1 Wheatstone bridge conductivity meter, ±3.0 percent accuracy, meeting requirements of ASTM D 1125.

7.4.2 Pipet or dip-type conductivity cell (cell constant = 1 cm^{-1}) meeting requirements of ASTM D 1125.

7.4.3 Thermometer, 0 to 50 °C, 0.5 °C divisions, conforming to the requirements of ASTM E 1.

7.4.4 1000-mL volumetric flask.

8. Reagents and Materials

8.1 Distilled water is to be used any time water is called for in this test method.

8.2 Potassium chloride (KCl), reagent grade quality as designated by the American Chemical Society, dried at 105 °C for 2 hours.

9. Precautions

9.1 *Safety Precautions.*-This procedure may involve hazardous materials, operations, and equipment. Heating equipment and hot containers can cause serious burns if handled improperly. Use a container holder whenever handling hot containers.

9.2 *Technical Precautions*:

9.2.1 Saturation of the extract mixture must be checked by determining the conductivity of the extract mixture. Soil samples that contain large amounts of soluble solids may exceed solution capacity of the extract mixture. If all soluble solids are not in solution, water soluble solids determination will not reflect the true percentage of soluble solids in the sample.

9.2.2 Electrical conductivity increases with temperature at a rate of 1.9 percent per degree Celsius. Procedures (used in this method) correct for measurements—not at 25 °C—by applying the response of a conductivity cell to a potassium chloride (KCl) reference solution at the same temperature as the extract mixture.

10. Calibration and Standardization

10.1 Verify that equipment is currently calibrated in accordance with applicable calibration procedure. If the calibration is not current, calibrate conductivity equipment in accordance with ASTM D 1125.

11. Preparation of Potassium Chloride Reference Solution

11.1 The reference solution is prepared to determine the response of the conductivity cell at the temperature of the extract mixture prepared in paragraph 13.

11.1.1 Dissolve 744.0 mg of potassium chloride (KCl) in water and dilute to 1000 mL at 20±2 °C in a volumetric flask. This is the standard reference solution (0.01 N) which has a conductivity of 1408 μS/cm at 25 °C. Store solution in a glass-stoppered glass bottle.

12. Sampling, Test Specimens, and Test Units

12.1 Prepare a sample of about 500 g of U.S.A. Standard series minus No. 4 (4.75 mm) sieve size material in accordance with USBR 5205.

12.2 Mix the 500-g sample thoroughly and reduce to a test sample of about 60±10 g using a sample splitter in accordance with splitting procedure and equipment described in USBR 5205. Save remainder of sample—in a properly labled container—for possible future use.

13. Preparation of Extract Mixture

13.1 All data are to be recorded on "Water Soluble Solids Determination" form as shown on figure 1.

13.2 Record the sample number and any other required identification data.

13.3 Mix the 60-g test sample thoroughly and measure out a test specimen of 40±0.5 g. Determine and record the mass of test specimen to the nearest 0.1 g.

13.4 Place test specimen in a clean 500-ml Erlenmeyer flask.

13.5 Measure 400±5 mL of distilled water into a graduated cylinder. Determine and record volume of water to nearest 5 ml.

13.6 Add water to flask containing the test specimen. Stopper flask tightly.

13.7 Calculate and record the extraction ratio to nearest 0.1 mL/g.

13.8 Agitate mixture of soil and water in flask by swirling flask. Agitate mixture at least four times daily for 4 days.

NOTE 1.-A standard agitation time of 4 days has been adopted for this procedure. The agitation time may be modified (either shortened or lengthened) depending on the solubility of the solids in the soil being tested. The standard agitation time may be modified if testing is performed to determine the relationship between extract mixture conductivity (an indication of solubility) and agitation time. If conductivity becomes constant with increasing agitation time, the shortest agitation time which results in constant conductivity may be used for routine testing of the soil. If no trend develops in the data or if extremely long agitation times are required to reach constant conductivity use of the 4-day standard time is recommended.

13.9 After final agitation, allow soil particles to settle—typically overnight. The extract mixture is the clear liquid remaining over the settled soil particles.

14. Conductivity Determination

14.1 Measure temperature of extract mixture. Measure temperature of KCl reference solution prepared in paragraph 11. If temperatures are not within ±2 °C of

each other, store the liquids in the same area until temperatures are within ±2 °C of each other.

14.2 Determine response of the conductivity cell to the KCl reference solution as follows:

14.2.1 Rinse the conductivity cell with distilled water.

14.2.2 Rinse conductivity cell three times with the KCl reference solution.

14.2.3 Fill conductivity cell with enough KCl reference solution to cover electrodes; be careful to avoid entrapment of air bubbles in the cell.

14.2.4 Determine and record conductance, K_1, of the KCl reference solution, to nearest 10 µS, using conductivity meter following instructions provided by manufacturer of instrument.

14.3 Determine and record conductance, K_x, of the extract mixture according to subparagraphs 14.2.1 through 14.2.4 using the extract mixture in place of the KCl reference solution.

NOTE 2.–This procedure also can be performed using the extract solution prepared in subparagraph 15.2.

14.4 Calculate and record cell response, J, to nearest 0.01 cm^{-1}.

14.5 Calculate and record conductivity, K, of extract mixture to nearest 10 µS/cm.

14.5.1 If conductivity is larger than 2200 µS/cm, extract mixture may be saturated and cannot be used. Discard the entire soil and water mixture and prepare another extract mixture in accordance with paragraph 13 except use less soil (higher extraction ratio). The conductivity of the new extract mixture is checked to determine that saturation of the extract mixture has not been exceeded.

15. Procedure

15.1 All data are to be recorded on "Water Soluble Solids Determination" form (fig. 1).

15.2 Take the extract mixture (prepared in par. 13) and filter 70±10 mL of the clear liquid by pouring through a paper filter using the vacuum apparatus. The filtered fluid is the extract solution. If the extract solution is cloudy, refilter using a finer filter paper.

15.3 Dry an evaporating dish in a convection oven for 1 hour at 105±5 °C and cool in a desiccator. Determine and record mass of evaporating dish to nearest 0.0001 g.

15.4 Obtain 50±10-mL volume of extract solution.

15.5 Pour the 50±5-mL volume of extract solution into evaporating dish.

15.6 Determine and record the mass of dish and extract solution to nearest 0.0001 g.

15.7 Place dish and solution on a steam-heated or electric hot plate set at 98 °C and evaporate liquid.

15.8 Place dish and residue in to a convection oven at 105±5 °C and dry 1 hour.

15.9 Place dish and dried residue into a desiccator to cool.

15.10 Determine and record the mass of dish and residue to nearest 0.0001 g.

15.11 Calculate and record mass of residue to nearest 0.0001 g.

15.11.1 If mass of residue is less than 0.01 g or more than 0.25 g, results cannot be used. Repeat subparagraphs 15.2 through 15.11 using more or less extract solution as appropriate.

15.12 Calculate to the nearest 0.1 percent and record the water soluble solids content determined by evaporation.

16. Calculations

16.1 *Specimen Preparation*:

16.1.1 Calculate extraction ratio.

$$R = \frac{V}{m_s} \quad (1)$$

where:

R = extraction ratio, mL/g
V = water volume, mL
m_s = specimen mass, g

16.1.2 Calculate cell response.

$$J = \frac{1408}{K_1} \quad (2)$$

where:

J = cell response to KCl reference solution at measurement temperature, cm^{-1}
K_1 = measured conductance of KCl reference solution at temperature of extract mixture, µS
1408 = conductivity of the KCl reference solution at 25 °C, µS/cm

16.1.3 Calculate conductivity of extract mixture.

$$K = JK_x \quad (3)$$

where:

K = conductivity of extract mixture, µS/cm
J = cell response to KCl reference solution at measurement temperature, cm^{-1}
K_x = measured conductance of extract mixture, µS

16.1.4 Calculate mass of residue.

$$m_r = m - m_d \quad (4)$$

where:

m_r = mass of residue, g
m = mass of dish and residue, g
m_d = mass of dish, g

16.1.5 Calculate water soluble solids content.

$$W_{ss} = 100\left(\frac{m_r R}{m_x - m_d}\right) \quad (5)$$

where:

W_{ss} = water soluble solids content, %
R = extraction ratio, mL/g
m_r = mass of residue, g

m_d = mass of dish, g
m_x = mass of dish and extract solution tested, g
100 = convert from decimal to percent

17. Report

17.1 The report is to consist of a completed and checked "Water Soluble Solids Determination" form (fig. 1).
17.2 All calculations are to show a checkmark.

18. Background References

Method of Test for Determining the Quantity of Soluble Sulfate in Solid (Soil or Rock) and Water Samples, Bureau of Reclamation, Division of Research and Laboratory Services, 2 p., May 1973.

Agricultural Handbook No. 60, 1954, "Diagnosis and Improvement of Saline and Alkali Soils," United States Department of Agriculture.

7-2387 (1-87) Bureau of Reclamation	WATER SOLUBLE SOLIDS DETERMINATION	Designation USBR 5450-89
SAMPLE NO. 598	PROJECT Example	FEATURE Example
TESTED BY DATE	COMPUTED BY DATE	CHECKED BY DATE

SPECIMEN NO.	17		
SPECIMEN PREPARATION			
(1) SPECIMEN MASS, M_s	40.1		g
(2) WATER VOLUME, V	400		mL
(3) EXTRACTION RATIO, R=(2)/(1)	10.0		mL/g
(4) MEASURED CONDUCTANCE OF KCL REFERENCE SOLUTION K_1	1440		µS
(5) CELL RESPONSE, J=1408*/(4)	0.98		cm^{-1}
(6) CONDUCTANCE, K_x	1370		µS
(7) CONDUCTIVITY, K=(5)x(6)	1340		µS/cm
(8) MASS OF DISH AND EXTRACT SOLUTION, M_x	102.3915		g
(9) MASS OF DISH + RESIDUE, M	44.4369		g
(10) MASS OF DISH, M_d	44.3754		g
(11) MASS OF RESIDUE, M_r=(9)-(10)	0.0615		g
(12) WATER SOLUBLE SOLIDS, $W_{ss} = \frac{(11) \times (3)}{(8) - (10)} \times 100$	1.1		%

*1408 = CONDUCTIVITY OF THE KCL REFERENCE SOLUTION AT 25°C, µS/cm

Figure 1. - Water soluble solids determination — example.

UNITED STATES DEPARTMENT OF THE INTERIOR
BUREAU OF RECLAMATION

USBR 5500-89

PROCEDURE FOR

PERFORMING LABORATORY COMPACTION OF SOILS — 5.5-LBM RAMMER AND 18-IN DROP

INTRODUCTION

This procedure is under the jurisdiction of the Geotechnical Services Branch, Code D-3760, Research and Laboratory Services Division, Denver Office, Denver, Colorado. The procedure is issued under the fixed designation USBR 5500. The number immediately following the designation indicates the year of acceptance or the year of last revision.

1. Scope

1.1 This designation outlines the procedure for performing laboratory compaction of soils.

1.2 This procedure is performed to determine the relationship between the moisture content and the dry unit weight of soil when compacted with a given compactive effort. A compaction curve is plotted from which the optimum moisture content and maximum dry unit weight can be determined.

1.3 This procedure is typically performed using a mechanical compactor that has been calibrated to produce the same effect as a manual compactor using a 5.5 lbm rammer and an 18-inch drop.

1.4 This procedure is limited to soil particles passing the No. 4 sieve. Laboratory compaction of soil containing particles up to 3-inches should be performed in accordance with USBR 5515. Laboratory compaction of soil containing particles up to 3/4-inch maximum particle size may be performed in accordance with ASTM D 698 — method B or C.

1.5 This procedure is normally performed on soils that contain more than 15 percent fines. It may be used, under certain circumstances, for soils containing 5 to 15 percent fines.

1.6 This procedure differs from method A of ASTM D 698. USBR 5500 uses a 1/20 ft^3 compaction mold and is based on a manual rammer drop of 18 inches. ASTM D 698 uses a 1/30 ft^3 compaction mold and is based on a manual rammer drop of 12 inches. Both methods, however, impart the same compactive effort of 12,375 ft-lbf/ft^3 to the soil specimen.

2. Auxiliary Tests

2.1 A test sample must be obtained in accordance with USBR 5205 prior to performing this procedure.

2.2 The moisture content must be determined in accordance with USBR 5300 as part of performing the procedure.

2.3 The specific gravity of the soil sample must be determined in accordance with USBR 5320 in order to plot the zero air voids curve on the moisture content–dry unit weight plot.

2.4 The penetration resistance must be determined in accordance with USBR 5505 in order to plot the penetration resistance–moisture content curve.

3. Applicable Documents

3.1 *USBR Procedures*:

USBR 1009 Calibrating Compaction Molds
USBR 1012 Calibrating Balances or Scales
USBR 1020 Calibrating Ovens
USBR 1025 Checking Sieves
USBR 1415 Calibrating Laboratory Mechanical Compactors
USBR 3900 Standard Definitions of Terms and Symbols Relating to Soil Mechanics
USBR 5000 Determining Unified Soil Classification (Laboratory Method)
USBR 5005 Determining Unified Soil Classification (Visual Method)
USBR 5205 Preparing Soil Samples by Splitting or Quartering
USBR 5300 Determining Moisture Content of Soil and Rock by the Oven Method
USBR 5320 Determining Specific Gravity of Soils
USBR 5505 Determining Moisture Content–Penetration Resistance Relationships of Fine Grained Soils
USBR 7250 Determination of Percent Relative Density
USBR 7255 Determining the Percent Compaction of Earthwork for Construction Control

3.2 *ASTM Standards*:

D 698 Moisture-Density Relations of Soils and Soil-Aggregate Mixtures Using 5.5-lb (2.49-kg) Rammer and 12-in (305-mm) Drop
E 11 Specification for Wire Cloth Sieves

4. Summary of Method

4.1 A minimum of five soil specimens from the same soil sample are prepared, each at a different moisture content. Each specimen is compacted in a mold using the same compactive effort. The moisture content and resulting dry unit weight of each specimen are determined and a compaction curve is plotted. From the compaction curve,

the optimum moisture content and maximum dry unit weight are determined.
To aid in evaluating the results, zero air void values are usually plotted and a curve is constructed and compared to the compaction curve.

5. Significance and Use

5.1 The moisture content–dry unit weight relationship is used to evaluate the state of compactness of most cohesive soil masses which occur naturally or are placed (fill).

5.2 The moisture content for most efficient compaction, at which the maximum dry unit weight is achieved with a given compactive effort, can be determined from the moisture content–dry unit weight relationship.

5.3 The engineering properties of a given soil mass, such as shear strength, compressibility, and permeability at a given state of compactness, can vary considerably when compacted by various methods and at various moisture contents. Therefore, considerable engineering judgment must be used in relating engineering properties of soils to the state of compactness (percent compaction).

5.4 Compaction characteristics of soils vary, depending on the gradation of the soil and the cohesiveness of any fines. Generally, the laboratory compaction test is most applicable for soils containing more than 15 percent fines. For construction control of these soils, percent compaction is used to determine the adequacy of compaction. For soils containing less than 5 percent fines, the minimum and maximum index unit weight tests are used to evaluate compaction characteristics. For construction control of these soils, percent relative density is used to determine the adequacy of compaction.

Soils containing 5 to 15 percent fines may need to be tested using both the laboratory compaction test and the combination of minimum–maximum index unit weight tests to determine which is most appropriate. Whether percent compaction or percent relative density is used for construction control depends on the test results and how the soil is being used. See USBR 7250 or 7255 appendix X1 for further discussion.

6. Terminology

6.1 Definitions are in accordance with USBR 3900. Terms of particular significance are:

6.1.1 *Compaction Curve.*–The curve showing the relationship between the dry unit weight and the moisture content of a soil for a given compactive effort (ASTM definition).

6.1.2 *Optimum Moisture Content* (w_o).–The moisture content at which a soil can be compacted to the maximum dry unit weight by a given compactive effort (ASTM).

6.1.3 *Maximum Unit Weight* (γ_{max}).–The dry unit weight defined by the peak of a compaction curve.

6.1.4 *Zero Air Voids Curve.*–The curve showing the relationship between dry unit weights and corresponding moisture contents, assuming that all of the voids are completely filled with water.

6.2 A term not included in USBR 3900 specific to this designation is:

6.2.1 *Compactive Effort.*–The theoretical energy used to compact soil into a known volume, expressed as ft-lbf/ft^3. Compactive effort is computed as the product of the drop height, rammer mass, blows per layer, and number of layers, divided by the volume of the mold.

7. Interferences

7.1 Variations in rammer drop height, rammer mass, or number of blows per soil layer will result in erroneous test data because of nonstandard compactive effort. To ensure a given compactive effort, the mechanical compactor must be inspected and calibrated in accordance with USBR 1415.

8. Apparatus

8.1 *General Apparatus*:

8.1.1 *Balance or Scale.*–A typical balance or scale used to determine moisture content must be readable to 0.1 g and have a capacity of about 1000 g.

8.1.2 *Balance or Scale.*–A typical balance or scale used to measure the mass of the compaction specimen must be readable to 0.01 lbm and have a capacity of about 50 lbm.

8.1.3 *Desiccator.*–An enclosed container, with a moisture absorbing chemical compound inside, used for cooling a heated soil sample while maintaining zero change in moisture content due to condensation.

8.1.4 *Dishes, Evaporating.*–Suitable dishes resistant to corrosion or changes in mass when subjected to repeated heating, cooling, or cleaning.

8.1.5 *Drying Oven.*–An oven, thermostatically controlled, preferably of the forced-draft type, and capable of maintaining a uniform temperature of 230±9 °F (110±5 °C) throughout the drying chamber.

8.1.6 *Graduated Cylinder.*–1000-mL capacity, graduated to 10 mL.

8.1.7 *Sieve.*–U.S.A. Standard series No. 4 (4.75 mm) sieve with stand, conforming to requirements of ASTM E 11.

8.1.8 *Straightedge.*–A stiff metal straightedge of convenient length. The scraping edge must be beveled if it is thicker than 1/8 inch.

8.2 *Equipment Unique to This Procedure* (see figs. 1, 2, and 3):

8.2.1 *Compaction Apparatus.*–A mechanical compaction device having a rammer with an initial mass of 5.5 lbm, an adjustable height of drop of about 12 to 18 inches, and a counter for registering the number of blows. If a mechanical compactor is not available, a manual tamper may be used instead (see app. X2). The device includes a 1/20-ft^3 mold with baseplate. The mold assembly must rest firmly on a uniform, rigid foundation—equivalent to a 200 lbm or larger block of concrete.

NOTE 1.–There are several varieties of commercially available molds; or the mold may be fabricated. (Figure 3 is typical.) The critical requirements are the tapered design, the inside diameter, and the height.

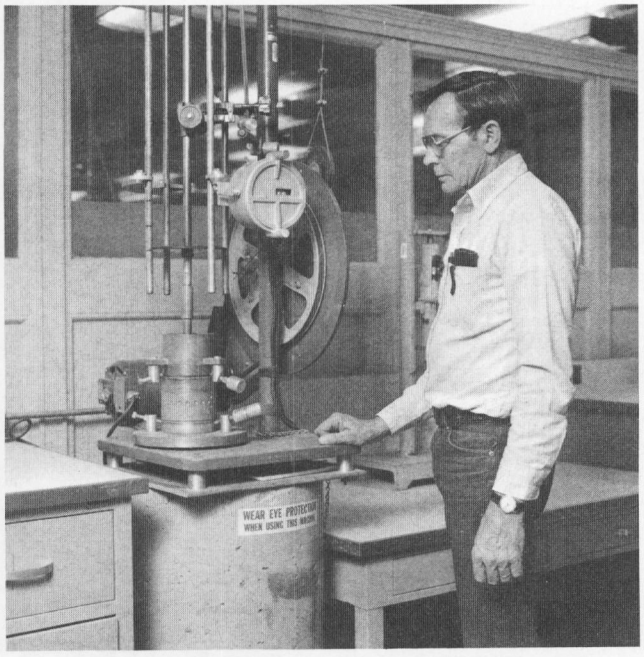

(a) Rainhart compactor

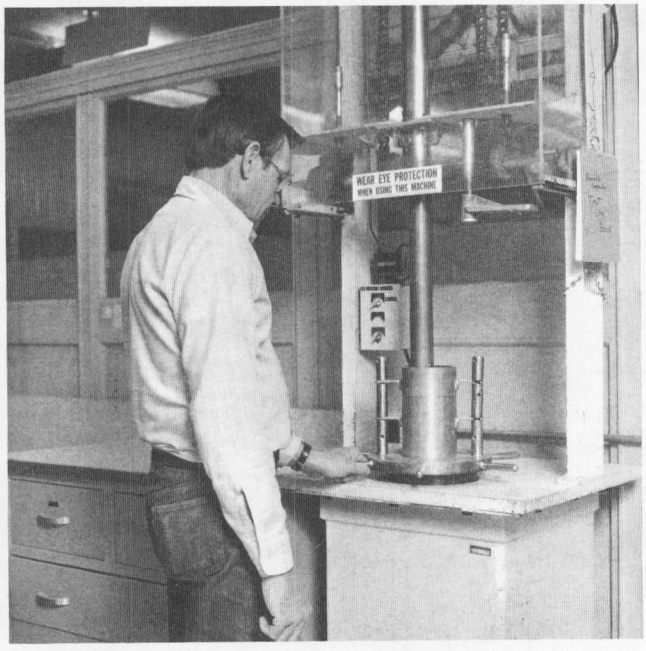

(b) Howard compactor

Figure 1. – Mechanical compactors.

8.2.2 *Extruder for Compaction Specimen.*–A mechanical device for removing a compacted soil specimen from a compaction mold.

8.2.3 *Moisture Proof Containers.*–Cylindrical metal or plastic containers, about 6-inches in diameter by 12 inches long, using a plastic inner bag for sealing and storing specimens to be tested.

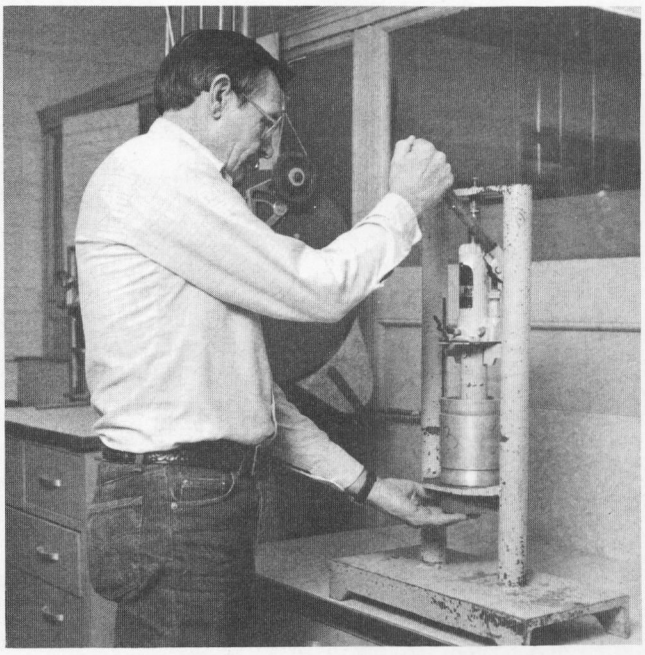

Figure 2. – Extruder for compaction specimens.

8.3 *Miscellaneous Equipment.*–Brushes, knife, mixing pan, scoop, etc., for mixing, placing, or trimming soil specimens.

9. Reagents and Materials

9.1 Tapwater that is free of acids, alkalies, or oils and is suitable for drinking should be used for wetting the soil prior to compaction.

10. Precautions

10.1 *Safety Precautions*:

10.1.1 This procedure may involve hazardous materials, operations, and equipment.

10.1.2 Do not place hands near the top of the mold when the mechanical rammer is operating.

10.2 *Technical Precautions*:

10.2.1 The test specimen should be placed and compacted as quickly as possible to minimize unrecorded moisture loss.

10.2.2 Due to the effects of sampling, handling, processing, and testing on some materials, results of this test may not reflect in-place conditions or the properties of the material caused by processing and placement during construction. Of particular concern are materials such as soft and/or friable decomposed granite, sandstone, shale, limestone, claystone, etc. or soils affected by air and/or oven drying. Such materials must be identified before processing and the person requesting the test should verify whether standard procedures are to be followed, whether modifications are appropriate, or whether the material should be processed and tested at all. Cautionary statements must be made on test data forms and in reporting the test data.

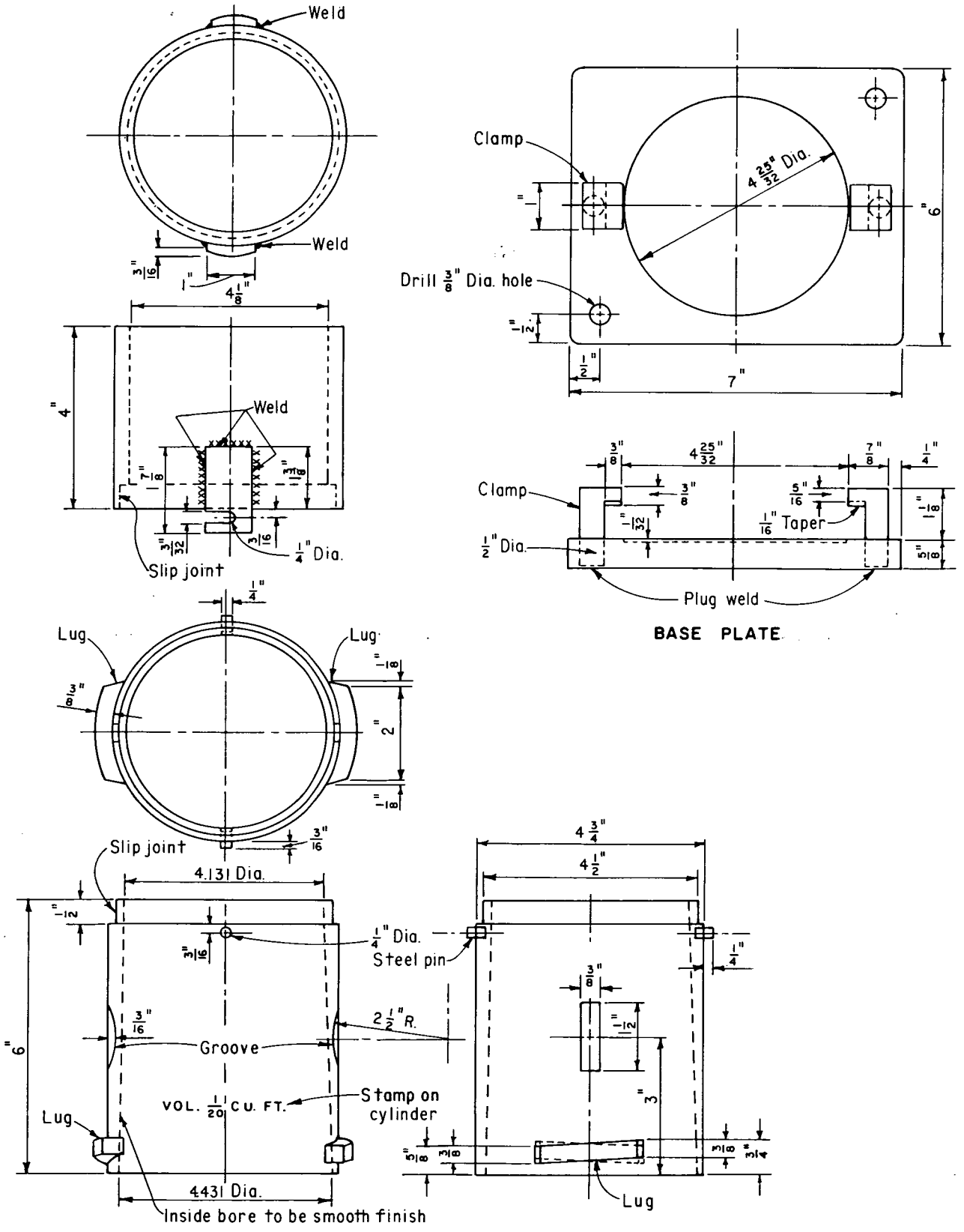

Figure 3. – Compaction mold

11. Sampling, Test Specimens, and Test Units

11.1 If the soil can be air dried, follow the steps in subparagraph 11.2. If the soil is to be tested without air drying, follow the steps in subparagraph 11.3. In either case, if enough soil is not available, carefully plan the number of specimens and corresponding moisture contents to use the available soil. If enough soil is not available to furnish the minimum of five specimens, then during performance of the procedure some soil will have to be reprocessed and reused. In this case, reprocess the soil in accordance with subparagraph 11.4.

11.2 *Air Dry Preparation*:

11.2.1 Prepare a test sample of about 50 lbm of minus No. 4 soil in accordance with USBR 5205.

11.2.2 Air dry the test sample if the soil was not air dried as part of performing USBR 5205.

11.2.3 Split the test sample into six specimens in accordance with USBR 5205. Set aside one of the specimens and keep it at the air dried moisture content in case an additional specimen is requested.

11.2.4 Prepare the remaining five specimens by adding increasing amounts of water to each specimen so the moisture content of each succeeding specimen is approximately 2 percentage points higher than the previous specimen. The moisture contents selected must bracket the optimum moisture content to ensure obtaining an appropriate compaction curve. Some soils having very high optimum moisture contents may require a larger moisture content increment between specimens in order to obtain a well defined compaction curve.

NOTE 2.–Judging the optimum moisture content requires practice and experience. A table of presumptive values may be useful.

11.2.4.1 Thoroughly mix the soil while sprinkling the water onto the soil to ensure an even distribution of moisture throughout the material. Record the amount of water added to each specimen on the "Laboratory Compaction Test" form as shown on figure 4.

11.2.5 Place each specimen in a properly labeled moisture proof container and store in accordance with the following time:

Classification USBR 5000 or 5005	*Minimum storage time, hours*
GM, SM	3
ML, CL, OL, GC, SC	18
MH, CH, OH	36

11.3 *Moist Preparation*:

11.3.1 Prepare a test sample of about 50 lbm of minus No. 4 soil by passing the soil through a No. 4 sieve. If plus No. 4 particles are present, select enough material to obtain 50 lbm of minus No. 4 soil.

11.3.2 Thoroughly mix the soil and separate into 6 specimens. Set aside one of the specimens and keep it in a moisture proof container in case an additional specimen is required.

11.3.3 Prepare the remaining five specimens by adding or subtracting water to each specimen so the moisture content of each succeeding specimen is approximately 2 percentage points wetter or dryer than the previous specimen. The moisture contents selected must bracket the optimum moisture content to ensure obtaining an appropriate compaction curve. Some soils having very high optimum moisture contents may require a larger moisture content increment between specimens in order to obtain a well defined compaction curve (see note 2).

11.3.3.1 When adding water, thoroughly mix the soil while sprinkling the water onto the soil to ensure an even distribution of moisture throughout the material.

11.3.3.2 When subtracting water, thoroughly mix the soil while drying the soil by using a fan or other device to blow dry air across the pan of soil. Other drying methods may be used—provided the soil temperature does not exceed 140 °F.

11.3.3.3 Record the amount of water added, or subtracted, for each specimen on the "Laboratory Compaction Test" form (fig. 4). The mass loss on specimens that have been dried must be determined on specimens after they have cooled to room temperature if heat was used during the drying.

11.3.4 Store each specimen in accordance with subparagraph 11.2.5.

11.4 *Reprocessed Soil*:

11.4.1 Reprocessing of soil consists of breaking compacted specimens and passing the broken material through a No. 4 sieve in order to prepare additional specimens. Reprocessing should take place only when an insufficient amount of soil is available. Reprocessing should not be used when testing plastic clay soils that tend to form lumps or when the soil is friable and the particles break down during testing.

11.4.2 Reprocessing of soil tends to result in maximum dry unit weights that are between 1 to 5 lbf/ft^3 higher than obtained using unprocessed soil.

11.4.3 If reprocessing of soil is necessary, soil that has been previously compacted should be mixed with as much "new soil" as is available and a note made on the data form and compaction curve indicating that reprocessed soil was used.

12. Calibration and Standardization

12.1 Verify that equipment is currently calibrated in accordance with the applicable calibration procedure. If the calibration is not current, perform the calibration before using the equipment for this procedure.

USBR 1009 Calibrating Compaction Molds
USBR 1012 Calibrating Balances or Scales
USBR 1020 Calibrating Ovens
USBR 1025 Checking Sieves
USBR 1415 Calibrating Laboratory Mechanical Compactors

13. Conditioning

13.1 Place the material for each soil specimen, as prepared for testing, in a moisture proof container and

7-1391 (12-86) Bureau of Reclamation	LABORATORY COMPACTION TEST	Designation USBR 5500 - 89
SAMPLE NO. 8	PROJECT Example	FEATURE Example
TESTED BY DATE	COMPUTED BY DATE	CHECKED BY DATE

Blows per layer 25 No. of layers 3 Height of drop 18 in

Mass of tamping rod 5.5 lbm Volume of mold 0.0497 ft^3

Specimen No.		1	2	3	4	5		
Wet unit weight determinations								
Water added	(g or ml)	80	160	240	330	420		
Mass of mold + wet soil	(lbm)	11.13	11.52	11.87	11.84	11.69		
Mass of mold	(lbm)	5.41	5.41	5.41	5.41	5.41		
Mass of wet soil	(lbm)	5.72	6.11	6.46	6.43	6.28		
Wet unit weight	(lbf/ft^3)	115.1	122.9	130.0	129.4	126.4		
Penetration resistance determinations								
Needle No.		40	40	20	10	4		
Area of needle	(in^2)	1/40	1/40	1/20	1/10	1/4		
Penetrometer reading	(lbf) 1	72	45	50	50	40		
	(lbf) 2	73	47	49	49	37		
	(lbf) 3	72	46	51	49	39		
Average reading	(lbf)	72	46	50	49	39		
Penetration resistance	(lbf/in^2)	2,880	1,840	1,000	490	156		
Moisture content determinations								
Dish No.		15	44	45	55	20		
Mass of dish + wet soil	(g)	382.4	386.7	382.1	381.5	369.5		
Mass of dish + dry soil	(g)	359.1	359.6	352.4	347.3	330.6		
Mass of dish	(g)	129.4	133.8	140.6	138.6	118.0		
Mass of water	(g)	23.3	27.1	29.7	34.2	38.9		
Mass of dry soil	(g)	229.7	225.8	211.8	208.7	212.6		
Moisture content	(% of dry mass)	10.1	12.0	14.0	16.4	18.3		
Dry unit weight determinations								
Dry unit weight	(lbf/ft^3)	104.5	109.7	114.0	111.2	106.8		

Remarks:

Auxiliary tests:

USBR 5205 - 89
USBR 5300 - 89
USBR 5320 - 89
USBR 5505 - 89

GPO 849-889

Figure 4. – Laboratory compaction test — example

store in accordance with the minimum time outlined in subparagraph 11.2.5.

14. Procedure

14.1 All data are to be recorded on the "Laboratory Compaction Test" form (fig. 4).

14.2 Determine the mass of the compaction mold to the nearest 0.01 lbm and record the value.

14.3 Ensure that the compaction device rests firmly on a level concrete (or equivalent) base.

14.4 Assemble the mold and collar and secure to the baseplate.

14.5 Select the initial specimen for testing; and immediately prior to compaction, pass the material to be compacted through a No. 4 (4.75 mm) sieve to break up any lumps of soil resulting from the specimen preparation procedure.

14.6 Place 2.0 to 2.5 lbm of soil into the mold and spread into a layer of uniform thickness.

14.7 Using a mechanical or manual (see app. X2) compaction apparatus, compact the layer with 25 blows distributed equally over the surface of the layer.

14.8 Repeat the compaction process outlined in subparagraphs 14.6 and 14.7 until three layers have been compacted. The third layer, when compacted, should extend into the collar about 1/4 inch, but not more than 1/2 inch. If, after the last layer is compacted the specimen is too short or too long, it should be discarded and a new specimen compacted.

NOTE 3.- When compacting specimens wetter than optimum moisture content, uneven compacted surfaces may occur and operator judgment is required as to the average height of the specimen. The last blow delivered by the rammer should not extend below the top of the compaction mold.

14.9 Taking care not to disturb the compacted soil within the mold, remove the collar from the mold and use a straightedge to trim the specimen flush with the top of the mold. A knife may be used to remove or loosen soil sticking to the inside of the collar and for initial trimming of the compacted specimen.

14.10 Remove the mold from the baseplate.

14.11 Determine and record the mass of the mold and the compacted soil to the nearest 0.01 lbm.

14.12 Perform the penetration resistance test in accordance with USBR 5505.

14.13 Extrude the specimen from the mold and cut about 1-1/2-inch-square by 6-inch-long moisture content specimen from the center of the compacted specimen. The moisture content specimen should have a mass of at least 200 grams.

14.13.1 If reprocessing is necessary, place the remainder of the specimen back in the container with any extra soil and set aside.

14.14 Place the moisture content specimen obtained as outlined in subparagraph 14.13 in a suitable container for drying and determination of moisture content.

14.15 Calculate the wet density of the compacted specimen to the nearest 0.1 lbm/ft³.

14.15.1 Convert wet density to wet unit weight by changing lbm/ft³ to lbf/ft³ and record to the nearest 0.1 lbf/ft³. (Assume 1 lbm = 1 lbf.)

14.16 Repeat the procedure outlined in subparagraphs 14.4 through 14.15 until at least five specimens have been compacted.

NOTE 4.–After determining the wet unit weight of the second and each successive compacted specimen, compare the wet unit weights to ensure that a desired pattern is developing so that points on each side of the optimum moisture content are compacted.

14.17 Determine the moisture content of each compacted specimen in accordance with USBR 5300.

14.18 Calculate the dry unit weight for each compacted specimen and record to the nearest 0.1 lbf/ft³.

14.19 Plot the moisture contents (abscissa) and dry unit weights (ordinate) as shown on figure 5.

14.20 Draw a smooth curve connecting the plotted points.

14.21 The optimum moisture content is the moisture content corresponding to the peak of the curve. Determine the value and record to the nearest 0.1 percent.

14.22 The maximum dry unit weight is the dry unit weight corresponding to the optimum moisture content. Determine the value and record to the nearest 0.1 lbf/ft³.

14.23 If two or more plotted points do not fall on each side of the optimum moisture content, additional specimens must be prepared and compacted at appropriate moisture contents.

14.24 If additional material is not available, see subparagraph 11.4.

14.25 Determine the specific gravity for the soil sample in accordance with USBR 5320.

14.26 Use appendix table X1, "Points for Curve of Complete Saturation" (zero air voids curve) to obtain appropriate dry unit weight and corresponding moisture content values.

14.27 Plot the zero air voids curve shown on figure 5 and outlined in appendix X1.

15. Calculations

15.1 Calculate the wet density of the compacted soil specimen to the nearest 0.1 lbm/ft³.

$$\rho_{wet} = \frac{D - E}{V} \qquad (1)$$

where:

ρ_{wet} = wet density of compacted soil, lbm/ft³
V = volume of mold, ft³
D = mass of mold + wet soil, lbm
E = mass of mold, lbm

15.1.1 In the procedure, wet density is converted to wet unit weight by changing from lbm/ft³ to lbf/ft³. (Assume 1 lbm = 1 lbf.)

15.2 Calculate the dry unit weight of the soil specimen.

$$\gamma_d = \frac{\gamma_{wet}}{1 + \left(\frac{w}{100}\right)} \quad (2)$$

where:

γ_d = dry unit weight of compacted soil, lbf/ft³
w = moisture content, %
γ_{wet} = wet unit weight, lbf/ft³

16. Report

16.1 The report is to consist of the completed and checked forms:

"Laboratory Compaction Test" (fig. 4).

"Compaction-Penetration Resistance Curves" (fig. 5).

16.2 All calculations are to show a checkmark and all plotting must be checked.

17. Precision and Accuracy

17.1 Criteria for judging the acceptability of the maximum dry unit weight and optimum moisture content test results are given in table 1. The standard deviation s is computed from the equation:

$$s^2 = \frac{1}{n-1} \sum_{i=1}^{n} (X_i - \bar{X})^2 \quad (3)$$

where:

n = number of determinations
X_i = individual value of each determination
$\bar{X}$ = numerical average of the determinations

Table 1. – Precision†

	Standard deviation, s	Acceptable range of two results, expressed as percent of mean value*
Single-operator precision:		
Maximum dry unit weight	– –	1.9
Optimum moisture content	– –	9.5
Multilaboratory precision:		
Maximum dry unit weight	±1.66 lbf/ft³	4.0
Optimum moisture content	±0.86 %	15.0

† All values shown (in this table) are based on average test results from a variety of different soils and are subject to future revision.

* This column indicates a limiting range of values which should not be exceeded by the difference between any two results, expressed as a percentage of the average value. In cooperative test programs it has been determined that 95 percent of the tests do not exceed the limiting acceptable ranges shown above.

17.2 Criteria for assigning standard deviation values for single-operator precision have not been established.

7-1414 (9-85) Bureau of Reclamation

COMPACTION - PENETRATION RESISTANCE CURVES

Designation USBR 5500 - 89

SAMPLE NO.	FEATURE	PROJECT
8	Example	Example

Hole No. _____ Plotted by _____ Date _____

Depth _____ ft ☐ m ☐ Checked by _____ Date _____

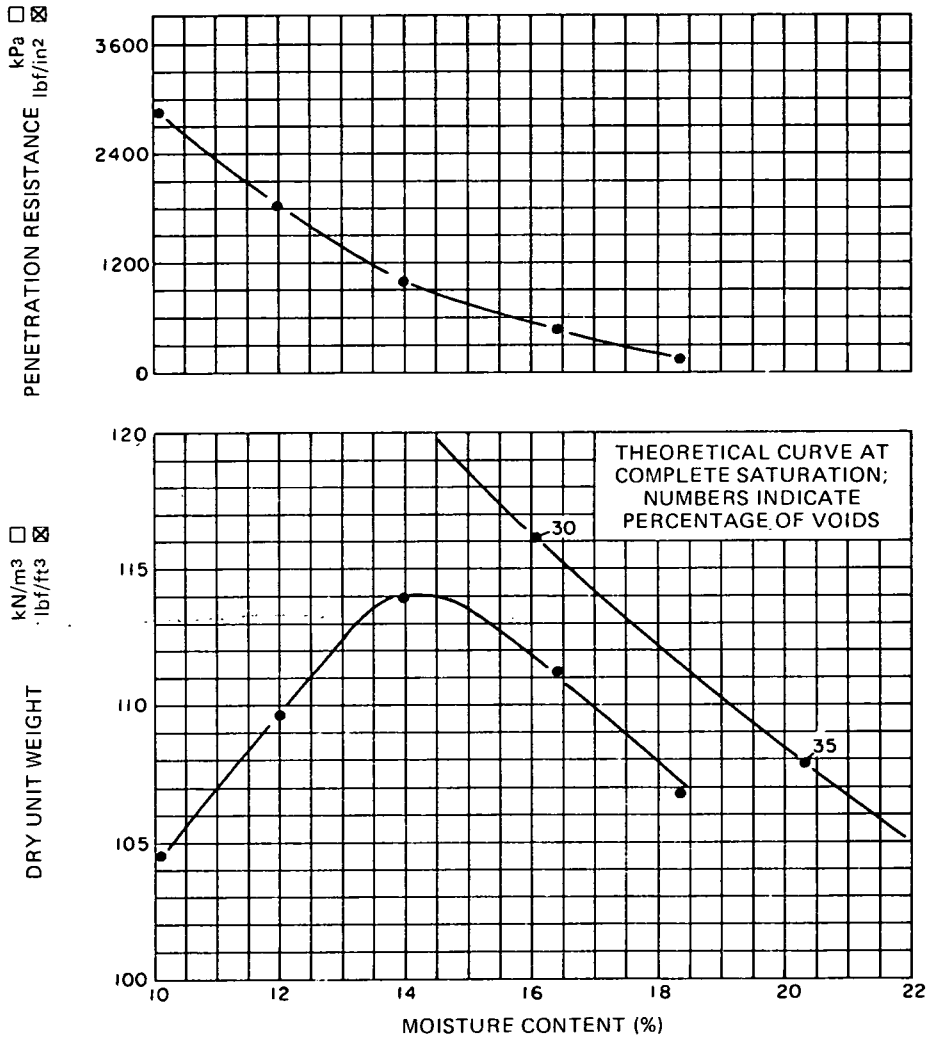

CLASSIFICATION SM / ML

Gravel	13 %
Sand	40 %
Fines	47 %

ATTERBERG LIMITS

Liquid Limit	28 %
Plasticity Index	4 %
Shrinkage Limit	_____ %

SPECIFIC GRAVITY

Minus No. 4	2.66
Plus No. 4	_____
Bulk	_____
Apparent	_____
Absorption	_____ %

Remarks _____

COMPACTION

Method	_____
Percent larger than tested	13
Maximum dry unit weight	114.0 ☐ kN/m3 ☒ lbf/ft3
Optimum moisture content	14.0 %
Degree of saturation @ opt	_____ %
Penetration resistance @ opt	1000 ☐ kPa ☒ lbf/in2

GPO 848-759

Figure 5. – Compaction–penetration resistance curves.

APPENDIX

X1. ZERO AIR VOIDS CURVE DETERMINATION — Curve of Complete Saturation

X1.1 Scope

X1.1.1 This appendix outlines the procedure to obtain and plot appropriate dry unit weight and corresponding moisture content values at complete saturation given the specific gravity of the soil, along with a completed moisture content–unit weight plot.

X1.1.2 The resulting curve represents the relationship between dry unit weights and corresponding moisture content–assuming the voids are completely filled with water. Materials compacted by the usual field and laboratory compaction methods contain entrapped air. Therefore, the field *roller density curves* and laboratory compaction curves will approach but never will cross the zero air voids curve.

X1.2 Procedure

X1.2.1 Determine the specific gravity of the soil specimen in accordance with USBR 5320.

X1.2.2 Construct a compaction curve for the soil from a compaction test.

X1.2.3 Use table X1, "Points for Curve of Complete Saturation" to obtain appropriate moisture content–dry unit weight points for a given specific gravity.

X1.2.3.1 Enter the table with the value of specific gravity obtained in subparagraph X1.2.1.

X1.2.3.2 Select at least three values of dry unit weight and corresponding moisture content that approximately identify maximum and minimum dry unit weight–moisture content points obtained in the compaction test.

X1.2.4 Plot the points selected as shown on figure 5. The points are to be labeled with the corresponding percentage of void values also found in table X1.

X1.2.5 Draw a smooth curve connecting the plotted points.

NOTE X1.1.–The values in table X1 are calculated using the following relationships:

$$\gamma_d = \gamma_w G_s \left(1 - \frac{n}{100} \right) \quad \text{(X1-1)}$$

$$w = \frac{n \gamma_w}{\gamma_d} \quad \text{(X1-2)}$$

where:

γ_d = dry unit weight of compacted soil in lbf/ft³ or kN/m³
γ_w = unit weight of water, 62.43 lbf/ft³ at 4 °C (9.81 kN/m³)
G_s = specific gravity of the soil
n = porosity, %
w = moisture content, %

X2. MANUAL COMPACTOR

X2.1 A manual compactor instead of a mechanical compaction device may be used to compact specimens. The rammer contact face must be flat and circular and have a diameter of 2 inches. The mass of the rammer is 5.5 lbm ±1 percent. The rammer must be equipped with a guide sleeve that allows the rammer to fall freely a distance of 18±1/16 inches and which provides sufficient clearance so the free fall of the rammer shaft and head is not restricted. The guide sleeve must have 4 vent holes at each end with centers 3/4±1/16 inch from each end and spaced 90 degrees apart. The minimum diameter of the vent holes is 3/8 inch. During compaction, the mold assembly shall rest firmly on a uniform, rigid foundation—equivalent to a 200 lbm or larger block of concrete.

X2.2 While operating the manual rammer, care should be taken to ensure that the rammer falls freely within the guide sleeve. The guide sleeve should be held steady and in a plumb position. Avoid rebound of the rammer from the top end of the guide sleeve. Apply the blows at a uniform rate using not less than 40 seconds per cycle of 25 blows. Distribute the blows uniformly over the surface of the layer.

Table X1. – Points for curve of complete saturation.

Percent voids	Percent voids 10	15	20	25	30	35	40	45	50	55	60
Specific gravity	Dry unit weight in pounds force per cubic foot Moisture content in percent										
2.45	137.6	130.0	122.4	114.8	107.1	99.5	91.8	84.2	76.5	68.8	61.2
	4.5	7.2	10.2	13.6	17.5	22.0	27.2	33.4	40.8	49.9	61.3
2.46	138.3	130.6	122.8	115.2	107.5	99.8	92.2	84.6	76.8	69.2	61.5
	4.5	7.2	10.2	13.5	17.4	21.9	27.1	33.2	40.7	49.6	60.9
2.47	138.9	131.2	123.5	115.7	108.0	100.4	92.6	84.9	77.2	69.4	61.7
	4.5	7.1	10.1	13.5	17.3	21.8	27.0	33.1	40.5	49.5	60.7
2.48	139.5	131.6	124.0	116.2	108.5	100.7	93.0	85.2	77.5	69.7	62.0
	4.5	7.1	10.1	13.4	17.3	21.7	26.9	33.0	40.3	49.3	60.4
2.49	140.0	132.2	124.4	116.6	108.9	101.1	93.3	85.6	77.8	70.0	62.2
	4.5	7.1	10.1	13.4	17.2	21.6	26.8	32.8	40.2	49.2	60.3
2.50	140.4	132.6	124.8	117.0	109.2	101.4	93.6	85.9	78.1	70.2	62.4
	4.4	7.1	10.0	13.3	17.1	21.5	26.7	32.7	40.0	48.9	60.0
2.51	141.0	133.2	125.4	117.5	109.7	101.9	94.1	86.3	78.2	70.6	62.7
	4.4	7.0	10.0	13.3	17.1	21.4	26.5	32.6	39.9	48.7	59.8
2.52	141.6	133.8	125.9	118.1	110.2	102.4	94.4	86.6	78.7	70.8	63.0
	4.4	7.0	9.9	13.2	17.0	21.4	26.5	32.4	39.7	48.5	59.5
2.53	142.2	134.4	126.3	118.5	110.5	102.7	94.7	86.9	79.0	71.2	63.2
	4.4	7.0	9.9	13.2	16.9	21.3	26.3	32.3	39.5	48.3	59.3
2.54	142.8	134.9	126.9	119.0	111.1	103.1	95.2	87.2	79.3	71.4	63.4
	4.4	6.9	9.9	13.1	16.8	21.2	26.2	32.2	39.4	48.1	59.1
2.55	143.2	135.3	127.3	119.4	111.4	103.4	95.5	87.5	79.6	71.6	63.6
	4.4	6.9	9.8	13.1	16.8	21.1	26.2	32.1	39.2	47.9	58.9
2.56	143.8	135.8	127.8	119.8	111.8	103.8	95.8	87.9	79.9	71.9	63.9
	4.3	6.9	9.8	13.0	16.8	21.1	26.1	32.0	39.1	47.7	58.6
2.57	144.3	136.3	128.3	120.3	112.3	104.2	96.2	88.2	80.2	72.2	64.1
	4.3	6.9	9.7	13.0	16.7	21.0	26.0	31.8	38.9	47.5	58.4
2.58	144.9	136.8	128.8	120.7	112.7	104.6	96.6	88.5	80.5	72.4	64.4
	4.3	6.8	9.7	12.9	16.7	20.9	25.9	31.7	38.8	47.4	58.1
2.59	145.5	137.4	129.3	121.2	113.1	105.1	97.0	88.9	80.8	72.7	64.6
	4.3	6.8	9.7	12.9	16.6	20.8	25.6	31.6	38.6	47.2	57.9
2.60	146.0	137.9	129.8	121.7	113.6	105.5	97.3	89.2	81.1	73.0	64.9
	4.3	6.8	9.6	12.9	16.5	20.7	25.7	31.5	38.5	47.0	57.7
2.61	146.6	138.4	130.3	122.2	114.0	105.9	97.7	89.6	81.4	73.3	65.1
	4.3	6.7	9.6	12.8	16.4	20.6	25.6	31.3	38.3	46.8	57.5
2.62	147.2	138.9	130.8	122.6	114.5	106.3	98.1	89.9	81.8	73.6	65.4
	4.2	6.7	9.6	12.7	16.4	20.6	25.5	31.2	38.2	46.6	57.3
2.63	147.7	139.5	131.3	123.1	114.9	106.7	98.5	90.3	82.1	73.8	65.6
	4.2	6.7	9.5	12.7	16.3	20.5	25.4	31.1	38.0	46.5	57.1
2.64	148.3	140.0	131.8	123.6	115.3	107.1	98.9	90.6	82.4	74.1	65.9
	4.2	6.7	9.5	12.6	16.3	20.4	25.3	31.0	37.9	46.3	56.8
2.65	148.8	140.6	132.3	124.0	115.8	107.5	99.2	91.0	82.7	74.4	66.1
	4.2	6.6	9.4	12.6	16.2	20.3	25.2	30.8	37.7	46.1	56.6
2.66	149.4	141.1	132.8	124.5	116.2	107.9	99.6	91.3	83.0	74.7	66.4
	4.2	6.6	9.4	12.5	16.1	20.3	25.1	30.8	37.6	45.9	56.4
2.67	150.0	141.6	133.3	125.0	116.6	108.3	100.0	91.6	83.3	75.0	66.6
	4.2	6.6	9.4	12.5	16.1	20.2	25.0	30.7	37.5	45.7	56.2
2.68	150.5	142.2	133.8	125.4	117.1	108.7	100.3	92.0	83.6	75.3	66.9
	4.1	6.6	9.3	12.4	16.0	20.1	24.9	30.5	37.3	45.6	56.0
2.69	151.1	142.7	134.3	125.9	117.5	109.1	100.7	92.3	83.9	75.5	67.1
	4.1	6.6	9.3	12.4	16.0	20.0	24.8	30.4	37.2	45.5	55.8
2.70	151.6	143.2	134.8	126.4	117.9	109.5	101.1	92.7	84.2	75.8	67.4
	4.1	6.5	9.3	12.3	15.9	19.9	24.7	30.3	37.0	45.3	55.6
2.71	152.2	143.7	135.3	126.8	118.4	109.9	101.5	93.0	84.6	76.1	67.6
	4.1	6.5	9.2	12.3	15.8	19.9	24.6	30.2	36.9	45.1	55.4
2.72	152.8	144.3	135.8	127.3	118.8	110.3	101.8	93.4	84.9	76.4	67.9
	4.1	6.5	9.2	12.3	15.8	19.8	24.6	30.1	36.8	44.9	55.2
2.73	153.3	144.8	136.3	127.8	119.3	110.7	102.2	93.7	85.2	76.7	68.1
	4.1	6.4	9.2	12.2	15.7	19.7	24.4	29.9	36.6	44.7	55.0
2.74	153.9	145.3	136.8	128.2	119.7	111.1	102.6	94.0	85.5	76.9	68.4
	4.1	6.4	9.1	12.2	15.7	19.7	24.4	29.9	36.5	44.6	54.8

Table X1. - Points for curve of complete saturation — Continued.

Percent voids	Percent voids 10	15	20	25	30	35	40	45	50	55	60
Specific gravity	Dry unit weight in pounds force per cubic foot Moisture content in percent										
2.75	154.4	145.9	137.3	128.7	120.1	111.5	103.0	94.4	85.8	77.2	68.6
	4.0	6.4	9.1	12.1	15.6	19.6	24.3	29.8	36.4	44.4	54.6
2.76	155.0	146.5	137.8	129.1	120.6	111.9	103.3	94.7	86.2	77.5	68.9
	4.0	6.4	9.1	12.1	15.7	19.5	24.2	29.7	36.2	44.3	54.4
2.77	155.6	147.0	138.3	129.6	121.0	112.4	103.7	95.1	86.5	77.8	69.2
	4.0	6.4	9.0	12.0	15.5	19.4	24.0	29.5	36.2	44.2	54.2
2.78	156.1	147.5	138.8	130.1	121.4	112.8	104.1	95.4	86.8	78.1	69.4
	4.0	6.4	9.0	12.0	15.4	19.4	23.9	29.4	36.0	44.0	54.0
2.79	156.8	148.1	139.3	130.6	121.9	113.2	104.5	95.8	87.1	78.4	69.7
	4.0	6.3	9.0	12.0	15.3	19.3	23.8	29.3	35.9	43.8	53.8
2.80	157.4	148.6	139.8	131.0	122.3	113.6	104.8	96.1	87.5	78.7	70.0
	4.0	6.3	8.9	11.9	15.3	19.2	23.8	29.2	35.7	43.6	53.5
2.81	157.8	149.0	140.0	131.5	122.7	114.0	105.2	96.4	87.7	78.9	70.1
	4.0	6.3	8.9	11.9	15.2	19.2	23.7	29.1	35.6	43.4	53.4
2.82	158.4	149.6	140.8	132.0	123.2	114.4	105.6	96.8	88.0	79.2	70.4
	3.9	6.3	8.9	11.8	15.2	19.1	23.6	29.0	35.5	43.3	53.2
2.83	159.0	150.2	141.3	132.4	123.6	114.8	106.0	97.1	88.3	79.5	70.7
	3.9	6.2	8.8	11.8	15.1	19.0	23.6	28.9	35.3	43.2	53.0
2.84	159.6	150.7	141.8	132.9	124.1	115.2	106.3	97.5	88.7	79.8	70.9
	3.9	6.2	8.8	11.7	15.1	18.9	23.5	28.8	35.2	43.0	52.8
2.85	160.1	151.2	142.2	133.4	124.5	115.6	106.7	97.9	89.0	80.1	71.2
	3.9	6.2	8.8	11.7	15.0	18.9	23.4	28.7	35.1	42.9	52.6
2.86	160.7	151.8	142.8	134.9	124.9	116.0	107.1	98.2	89.3	80.3	71.4
	3.9	6.2	8.7	11.6	15.0	18.8	23.3	28.6	35.0	42.8	52.5
2.87	160.1	151.2	143.3	134.3	125.4	116.4	107.5	98.5	89.6	80.7	71.7
	3.9	6.2	8.7	11.6	14.9	18.8	23.2	28.5	34.8	42.5	52.3
2.88	161.8	152.8	143.8	134.8	125.8	116.8	107.8	98.8	89.9	80.9	71.9
	3.9	6.1	8.7	11.6	14.9	18.7	23.2	28.4	34.7	42.4	52.1
2.89	162.4	153.4	144.2	135.2	126.2	117.2	108.2	99.2	90.2	81.2	72.2
	3.8	6.1	8.7	11.5	14.8	18.6	23.0	28.3	34.6	42.3	51.9
2.90	162.9	153.9	144.8	135.7	126.7	117.6	108.6	99.5	90.5	81.5	72.4
	3.8	6.1	8.6	11.5	14.8	18.6	23.0	28.2	34.5	42.1	51.7

UNITED STATES DEPARTMENT OF THE INTERIOR
BUREAU OF RECLAMATION

USBR 5505-89

PROCEDURE FOR

DETERMINING MOISTURE CONTENT — PENETRATION RESISTANCE RELATIONSHIPS OF FINE-GRAINED SOILS

INTRODUCTION

This procedure is under the jurisdiction of the Geotechnical Services Branch, code D-3760, Research and Laboratory Services Division, Denver Office, Denver, Colorado. The procedure is issued under the fixed designation USBR 5505. The number immediately following the designation indicates the year of acceptance or the year of last revision.

The procedure is similar to ASTM D 1558, except that this procedure contains a rewritten and more detailed description and the inclusion of USBR data forms.

1. Scope

1.1 This designation outlines the procedure for determining the moisture content–penetration resistance relationship of fine-grained soils using a soil penetrometer. This procedure normally is performed in conjunction with USBR 5500.

2. Auxiliary Tests

2.1 Soil specimens used for this procedure are prepared and compacted in accordance with USBR 5500. The moisture content must be determined in accordance with USBR 5300 in order to plot the moisture content–penetration resistance relationship curve.

3. Applicable Documents

3.1 *USBR Procedures*:
USBR 1410 Calibrating the Soil Penetrometer
USBR 3900 Standard Definitions of Terms and Symbols Relating to Soil Mechanics
USBR 5300 Determining Moisture Content of Soil and Rock by the Oven Method
USBR 5500 Performing Laboratory Compaction of Soils — 5.5-lbm Rammer and 18-in Drop
3.2 *ASTM Standard*:
D 1558 Standard Test Method for Moisture Content Penetration Resistance Relationships of Fine-Grained Soils

4. Summary of Method

4.1 Soil specimens at various moisture contents are prepared and compacted in a mold in accordance with USBR 5500. For each compacted specimen, a penetrometer needle is selected, attached to the penetrometer, and pushed into the specimen to a prescribed mark on the needle; and a penetrometer reading is taken. The procedure is performed at three locations on the test specimen, and an average penetrometer reading is determined. From the average penetrometer reading and the end area of the penetrometer needle, penetration resistance is calculated. Penetration resistance and moisture content are determined for each of the compacted specimens, and a curve of penetration resistance versus moisture content is plotted.

5. Significance and Use

5.1 The moisture content–penetration resistance relationship is an indication of the approximate shear strength of a soil over a range of unit weights and moisture contents. The test is one of a number of index tests used to evaluate soils for engineering purposes.

6. Terminology

6.1 Definitions are in accordance with USBR 3900. Terms of particular significance are:
6.1.1 *Moisture–Penetration Resistance Curve.*–The curve showing the relationship between: (1) the penetration resistance of a soil penetrometer, and (2) the moisture content.
6.1.2 *Penetrometer Penetration Resistance.*–The force required to produce a specified penetration into soil at a specified rate of a soil penetrometer.

7. Interferences

7.1 If the compacted soil specimen contains hard layers of coarse sand particles, the values obtained may be unreliably high. If these conditions are encountered, a note indicating that results may be unreliable and the reason therefore should be included in the report.

8. Apparatus

8.1 *Compaction Apparatus.*–Conforming to the requirements prescribed in USBR 5500.
8.2 *Soil Penetrometer* (fig. 1).–A soil penetrometer consisting of a spring dynamometer with a force-indicating

scale on the stem of the handle. The force scale shall be graduated to 90 lbf (having 2-lbf divisions) with a line encircling the stem at each 10-lbf interval. A sliding ring on the stem indicates the maximum force obtained in the test.

8.3 *Penetrometer Needle Set* (fig. 1 and table 1).–Each penetrometer needle shall consist of a shank with a head of known end area. The set of interchangeable needles shall include the sizes as shown in table 1. The needle shank should have graduations inscribed at intervals of 1 inch to indicate the depth of penetration, and shall have a length of not less than 4 inches — excluding the threaded portion. Needles should not be used when they have been worn so as to reduce the flat-end area by 5 percent.

Table 1. – Sizes for interchangeable penetrometer needles.

Needle No.	Nominal area in²	End diameter, in	Minimum end diameter, in
1	1	1.128	1.100
2	1/2	0.798	0.778
4	1/40	0.564	0.550
10	1/10	0.357	0.438
20	1/20	0.252	0.426
40	1/40	0.178	0.174

9. Precautions

9.1 *Safety Precautions*–This designation may involve hazardous materials, operations, and equipment.

9.2 *Technical Precautions*:

9.2.1 When penetration needles are so worn that the end diameter is less than the minimum value shown in table 1, they should be discarded.

9.2.2 The three penetrometer readings obtained from any one test specimen should be within ±5 lbf of one another. Penetrometer readings that differ by more than ±5 lbf may indicate that the test specimen has not been compacted properly. If at least two of the penetrometer readings are not within ±5 lbf of one another, the results are to be labeled "may not be reliable" in the report.

9.2.2.1 It may not be possible to obtain three penetrometer readings on an undisturbed soil surface using a needle with an end area larger than 1/4 in². In this case, make one or two penetration resistance determinations. Indicate in the report that results "may not be reliable" and state the reason why.

9.2.3 The penetration resistance test should be performed as quickly as possible after compaction to minimize unrecorded moisture loss which results in an erroneous moisture content for the compacted soil specimen.

9.2.4 Due to the effects of sampling, handling, processing, and testing on some materials, results of this test may not reflect in-place conditions or the properties of the material caused by processing and placment during construction. Of particular concern are materials such as soft and/or friable decomposed granite, sandstone, shale, limestone, claystone, etc., or soils affected by air and/or oven drying. Such materials must be identified before processing and the person requesting the test should verify whether standard procedures are to be followed, whether modifications are appropriate, or whether the material should be processed and tested at all. Cautionary statements must be made on test data forms and in reporting the test data.

10. Sampling, Test Specimens, and Test Units

10.1 *Specimen Preparation*:

10.1.1 Prepare and compact test specimens in accordance with USBR 5500.

10.1.2 The penetrometer penetration resistance test is performed after preparation and compaction of each test specimen.

11. Calibration and Standardization

11.1 Verify that equipment is currently calibrated in accordance with the applicable calibration procedure. If the calibrations are not current, perform the calibrations before using the equipment.

11.2 Calibrate the soil penetrometer and needles in accordance with USBR 1410.

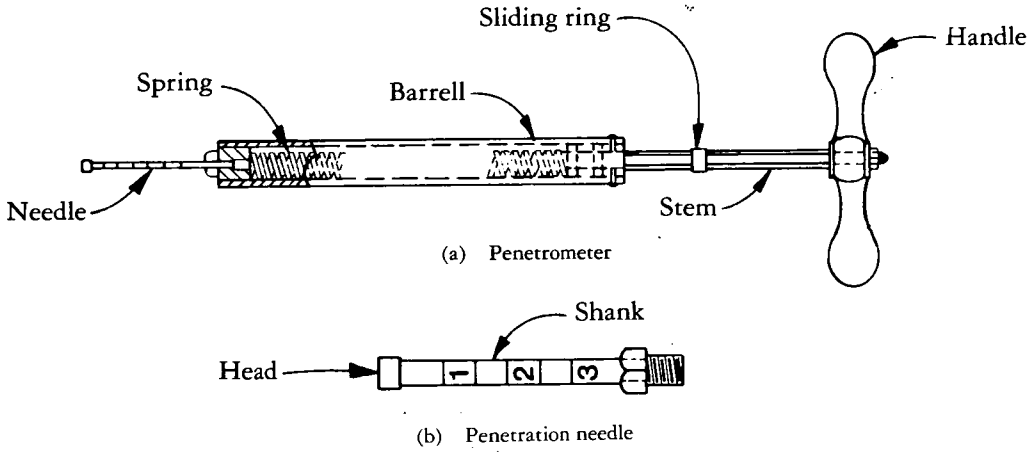

Figure 1. – Soil penetrometer.

12. Conditioning

12.1 Not applicable, special conditioning requirements are not needed for this procedure.

13. Procedure

13.1 All data are to be recorded on the "Laboratory Compaction Test" form as shown on figure 2. Since the test usually is performed in conjunction with USBR 5500, the data for both procedures are recorded on the same form.

13.2 The penetrometer penetration resistance test is performed after preparation and compaction of each test specimen. Place the mold containing the compacted soil specimen on the floor.

13.3 Select an appropriate penetrometer needle; attach it securely to the bottom of the penetrometer barrel.

NOTE 1.–If the specimen is drier than optimum moisture content, the 1/40-in² penetrometer needle generally produces satisfactory readings. As the moisture content of the compacted specimens is increased, the end area of the penetrometer needle should be increased also in order to obtain satisfactory readings.

13.4 The operator should stand so that the mold containing the test specimen is between the feet; hold the penetrometer in a vertical position. Place the needle away from the edge of the mold, keeping in mind that three penetrations are required. Push the needle into the soil approximately one-half inch by pushing down on the penetrometer barrel (not the handle). Make sure the needle is aligned perpendicular to the top of the compacted soil specimen.

13.5 Be sure the sliding ring on the stem is pushed against the top of the penetrometer barrel. Place both hands on the penetrometer handle as shown on figure 3; push the needle into the soil an additional 2-1/2 inches at a rate of approximately 1/2 in/s. This depth of penetration corresponds to the 3-inch mark on the needle.

13.6 Carefully remove the needle by slowly pulling up on the penetrometer handle.

13.7 Determine the penetrometer reading to the nearest 1 lbf by looking into the hole on the sliding ring and reading the number from the scale on the stem of the penetrometer.

13.8 If the reading is less than 20 or greater than 80 lbf, another needle size should be selected and subparagraphs 13.5 through 13.7 repeated at a different location on the test specimen until the reading falls in the desired range.

13.8.1 If the reading obtained is less than 20 lbf, a larger diameter needle should be selected for subsequent trials. If the reading obtained is greater than 80 lbf, a smaller diameter needle should be selected for subsequent trials.

13.9 Once a satisfactory reading is obtained, record the needle number, end area of the needle, and the penetrometer reading.

13.10 Repeat subparagraphs 13.4 through 13.8 two additional times performing the penetration at three different locations on the compacted test specimen; each time record the penetrometer reading obtained. Space the individual penetrations on the top of the soil specimen so as not to interfere with one another.

13.11 Calculate and record to the nearest 1 lbf the average of the penetrometer readings that are within ±5 lbf of one another (see subpars. 9.2.2 and 9.2.2.1).

13.12 Calculate and record the penetration resistance of the soil to the nearest 1 lbf/in².

13.13 Determine the moisture content of the test specimen in accordance with USBR 5300.

13.14 Penetration resistance and moisture content are to be determined on each specimen compacted in accordance with USBR 5500.

13.15 Plot penetration resistance and the corresponding moisture contents, and draw a smooth curve through the points as shown on figure 4.

13.16 Determine penetration resistance at optimum moisture content and record.

14. Calculations

14.1 Calculate the average penetration reading.

$$\text{Average penetrometer reading} = \frac{\Sigma r}{n}$$

where:

n = number of penetrometer readings
Σr = summation of penetrometer readings from the "Laboratory Compaction Test" form (fig. 2)

14.2 Calculate the penetration resistance value.

Penetration resistance,

$$\text{lbf/in}^2 = \frac{\text{average penetration reading, lbf}}{\text{end area of needle, in}^2}$$

NOTE 2.–Penetration resistance also may be obtained by multiplying average penetrometer reading by the reciprocal of the end area of the penetrometer needle (e.g., $70/(1/40) = 70 \times 40$).

15. Report

15.1 The report is to consist of the following completed and checked forms:

"Laboratory Compaction Test" (fig. 2).

Compaction–Penetration Resistance Curves (fig. 4).

15.2 All calculations are to show a checkmark and all plotting must be checked.

7-1391 (12-86) Bureau of Reclamation

LABORATORY COMPACTION TEST

Designation USBR 5505 - 89

SAMPLE NO.	PROJECT	FEATURE
8	Example	Example
TESTED BY DATE	COMPUTED BY DATE	CHECKED BY DATE

Blows per layer 25 No. of layers 3 Height of drop 18 in

Mass of tamping rod 5.5 lbm Volume of mold 0.0497 ft^3

Specimen No.		1	2	3	4	5		
Wet unit weight determinations								
Water added	(g or ml)	80	160	240	330	420		
Mass of mold + wet soil	(lbm)	11.13	11.52	11.87	11.84	11.69		
Mass of mold	(lbm)	5.41	5.41	5.41	5.41	5.41		
Mass of wet soil	(lbm)	5.72	6.11	6.46	6.43	6.28		
Wet unit weight	(lbf/ft^3)	115.1	122.9	130.0	129.4	126.4		
Penetration resistance determinations								
Needle No.		40	40	20	10	4		
Area of needle	(in^2)	1/40	1/40	1/20	1/10	1/4		
Penetrometer reading (lbf)	1	72	45	50	50	40		
	2	73	47	49	49	37		
	3	72	46	51	49	39		
Average reading	(lbf)	72	46	50	49	39		
Penetration resistance	(lbf/in^2)	2,880	1,840	1,000	490	156		
Moisture content determinations								
Dish No.		15	44	45	55	20		
Mass of dish + wet soil	(g)	382.4	386.7	382.1	381.5	369.5		
Mass of dish + dry soil	(g)	359.1	359.6	352.4	347.3	330.6		
Mass of dish	(g)	129.4	133.8	140.6	138.6	116.0		
Mass of water	(g)	23.3	27.1	29.7	34.2	38.9		
Mass of dry soil	(g)	229.7	225.8	211.8	208.7	212.6		
Moisture content	(% of dry mass)	10.1	12.0	14.0	16.4	18.3		
Dry unit weight determinations								
Dry unit weight	(lbf/ft^3)	104.5	109.7	114.0	111.2	106.8		

Remarks:

Auxiliary tests:

USBR 5205 - 89
USBR 5300 - 89
USBR 5320 - 89
USBR 5505 - 89

GPO 849-889

Figure 2. – Laboratory compaction test (penetration resistance determination) — example.

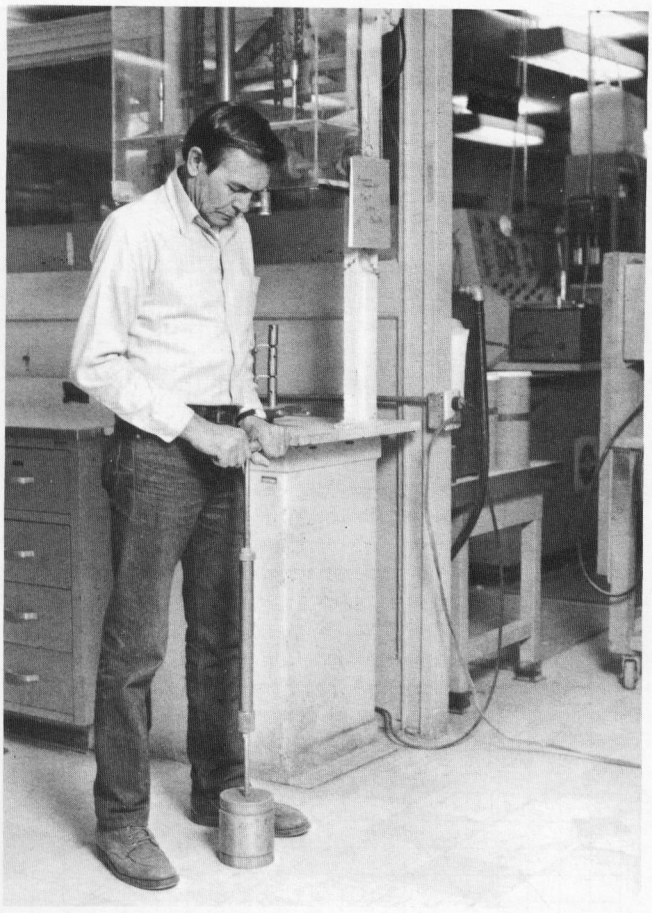

Figure 3. – Determining penetration resistance.

7-1414 (9-85)
Bureau of Reclamation

COMPACTION - PENETRATION RESISTANCE CURVES

Designation USBR 5505 - 89

SAMPLE NO.	FEATURE	PROJECT
8	Example	Example

Hole No. _____ Plotted by _____ Date _____

Depth _____ ft ☐ m ☐ Checked by _____ Date _____

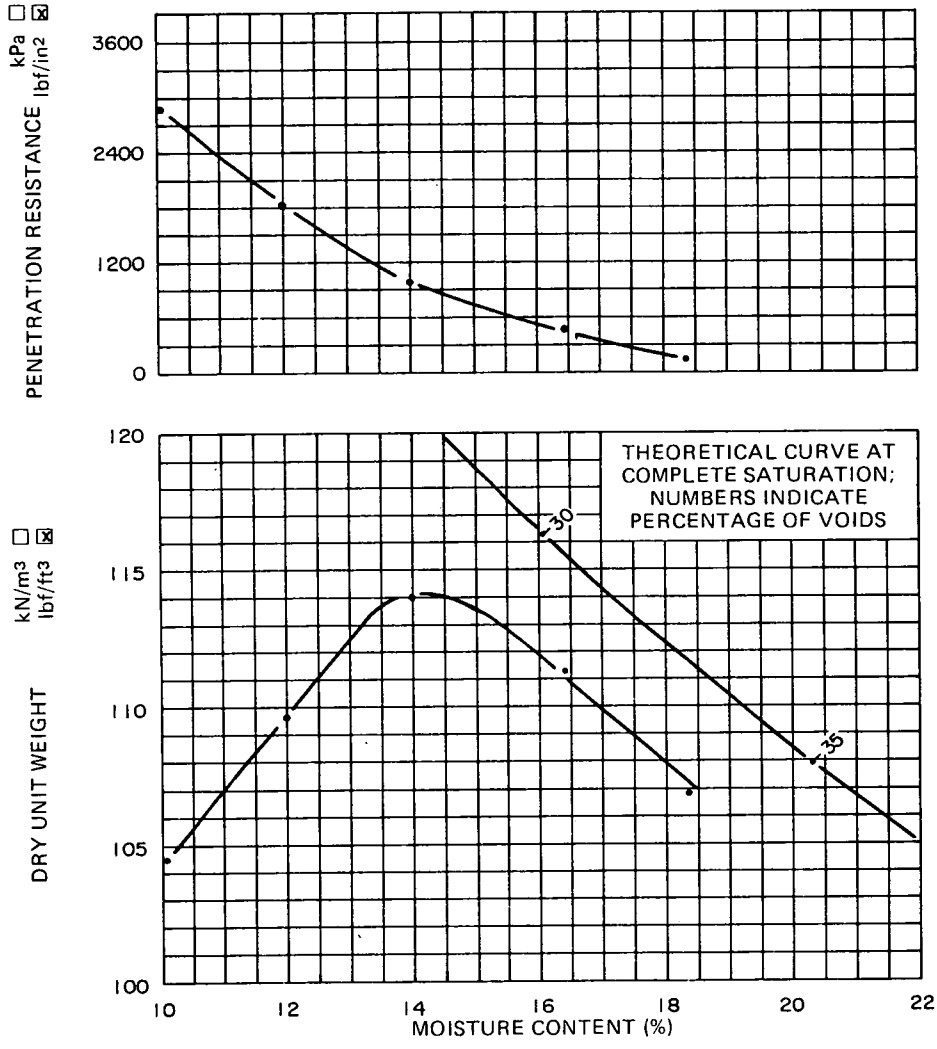

CLASSIFICATION SM/ML

Gravel	13	%
Sand	40	%
Fines	47	%

ATTERBERG LIMITS

Liquid Limit	28	%
Plasticity Index	4	%
Shrinkage Limit	_____	%

SPECIFIC GRAVITY

Minus No. 4	2.66	
Plus No. 4	_____	
Bulk	_____	
Apparent	_____	
Absorption	_____	%

Remarks _____

COMPACTION

Method _____

Percent larger than tested	13	
Maximum dry unit weight	114.0	☐ kN/m³ ☒ lbf/ft³
Optimum moisture content	14.0	%
Degree of saturation @ opt	_____	%
Penetration resistance @ opt	1000	☐ kPa ☒ lbf/in²

GPO 848-759

Figure 4. - Compaction–penetration resistance curves — example.

UNITED STATES DEPARTMENT OF THE INTERIOR
BUREAU OF RECLAMATION

USBR 5510-89

PROCEDURE FOR

PERFORMING LABORATORY COMPACTION OF SOILS—HARVARD MINIATURE

INTRODUCTION

This procedure is under the jurisdiction of the Geotechnical Services Branch, code D-3760, Research and Laboratory Services Division, Denver Office, Denver, Colorado. The procedure is issued under the fixed designation USBR 5510. The number immediately following the designation indicates the year of acceptance or the year of last revision.

1. Scope

1.1 This designation outlines the procedure for performing laboratory compaction of soils using the Harvard miniature compaction apparatus.[1,2][1]

1.2 The procedure is used to determine the relationship between the moisture content of the portion of soil passing the No. 4 sieve (4.75 mm) and the corresponding dry unit weight when the soil is compacted using the Harvard miniature compaction apparatus.

1.3 This procedure is normally performed on soils that contain more than 15 percent fines. It may be used, under certain circumstances, for soils containing 5 to 15 percent fines.

2. Auxiliary Tests

2.1 A test sample must be obtained in accordance with USBR 5205 prior to performing this procedure. The moisture content must be determined in accordance with USBR 5300 as part of performing this procedure. The specific gravity of the soil sample must be determined in accordance with USBR 5320 in order to plot the zero air voids curve on the moisture-unit weight plot.

3. Applicable Documents

3.1 *USBR Procedures*:
USBR 1009 Calibrating Compaction Molds
USBR 1012 Calibrating Balances or Scales
USBR 1020 Calibrating Ovens
USBR 1025 Checking Sieves
USBR 3900 Standard Definitions of Terms and Symbols Relating to Soil Mechanics
USBR 5000 Determing Unified Soil Classification (Laboratory Method)
USBR 5005 Determining Unified Soil Classification (Visual Method)
USBR 5205 Preparing Soil Samples by Splitting or Quartering
USBR 5300 Determining Moisture Content of Soil and Rock by the Oven Method
USBR 5320 Determining Specific Gravity of Soils

3.2 *ASTM Standard*:
E 11 Specification for Wire-Cloth Sieves for Testing Purposes

4. Summary of Method

4.1 A soil specimen is placed and compacted in a mold in five lifts using a special tamping device. Twenty five tamps are applied to each lift to achieve a standard compactive effort. To establish a compaction curve, at least five soil specimens are compacted—each at a different moisture content. Moisture-unit weight points, both wet and dry of optimum moisture content, are required.

5. Significance and Use

5.1 The Harvard miniature compaction test is performed to obtain data to develop a soil moisture-unit weight compaction curve.

5.2 The compaction mold has a volume equal to 1/454 ft^3. The mass of the soil (in grams) filling the mold is, therefore, numerically equal to the density of the soil in pounds per cubic foot.

5.3 The test equipment and procedures were developed to compact soil in the laboratory using a kneading action which simulates the action of a sheepsfoot roller.

5.4 This procedure can be used in place of the standard compaction test when a limited amount of material is available. The procedure also requires less time to perform than the standard compaction test.

6. Terminology

6.1 Definitions are in accordance with USBR 3900. Terms of particular significance are:

6.1.1 *Compaction curve.*—The curve showing the relationship between the dry unit weight and the moisture content of a soil for a given compactive effort (ASTM definition).

[1] Number in brackets refers to the reference.

6.1.2 *Maximum Unit Weight* (γ_{max}).–The dry unit weight defined by the peak of a compaction curve.

6.1.3 *Optimum Moisture Content* (w_o).–The moisture content at which a soil can be compacted to the maximum dry unit weight by a given compactive effort (ASTM).

6.1.4 *Zero Air Voids Curve.*–The curve showing the relationship between dry unit weights and corresponding moisture contents, assuming that all of the voids are completely filled with water.

7. Apparatus

7.1 *General Apparatus*:

7.1.1 *Balances or Scales.*–Typical balances or scales used for this designation are:

Application	*Readable to*	*Approximate capacity*
Compaction tamper calibration	0.5 lbm	100 lbm
Sample preparation	0.5 lbm	10 lbm
Specimen preparation	0.1 g	1000 g
Moisture content	0.1 g	500 g

7.1.2 *Drying Oven.*–An oven, thermostatically controlled, preferably of the forced-draft type, and capable of maintaining a uniform temperature of 230 ±9°F (110±5 °C) throughout the drying chamber.

7.1.3 *Straightedge.*–A stiff metal straightedge of any convenient length. The scraping edge must be beveled if it is thicker than 1/8 inch (3 mm).

7.1.4 *Sieve.*–U.S.A. Standard series No. 4 (4.75 mm) sieve conforming to the requirements of ASTM E 11.

7.1.5 *Bags.*–1-quart, moisture proof, plastic.

7.2 *Equipment Unique to This Procedure* (see fig. 1):

7.2.1 *Specimen Ejector.*–To facilitate removal of the soil sample from the mold.

7.2.2 *Mold Holder.*–A clamping device to hold the mold and collar in place during compaction, with solid base plate.

7.2.3 Compaction Mold.–1/454-ft^3 capacity with detachable extension collar.

7.2.4 *Collar Remover.*–A device for holding the compacted soil and mold in place while the extension collar is being removed.

7.2.5 *Compaction Tamper.*–Provided with springs which can be preset to 20-pound (9-kg) loading.

7.3 *Miscellaneous Equipment.*–Mixing pans, spoon, trowel, spatula, etc. for thoroughly mixing the soil sample with water; a wood plunger for leveling compaction lifts.

8. Reagents and Materials

8.1 Tapwater that is free of acids, alkalies, or oils and is suitable for drinking should be used for wetting the soil prior to compaction.

9. Precautions

9.1 *Safety Precautions.*–The surface on which the test is to be performed must be strong enough to support the compactive effort.

9.2 *Technical Precautions.*–The test specimen should be prepared and compacted as quickly as possible to minimize unrecorded moisture loss.

9.2.2 Due to the effects of sampling, handling, processing, and testing on some materials, results of this test may not reflect in-place conditions or the properties of the material after processing and placement during construction. Of particular concern are materials such as

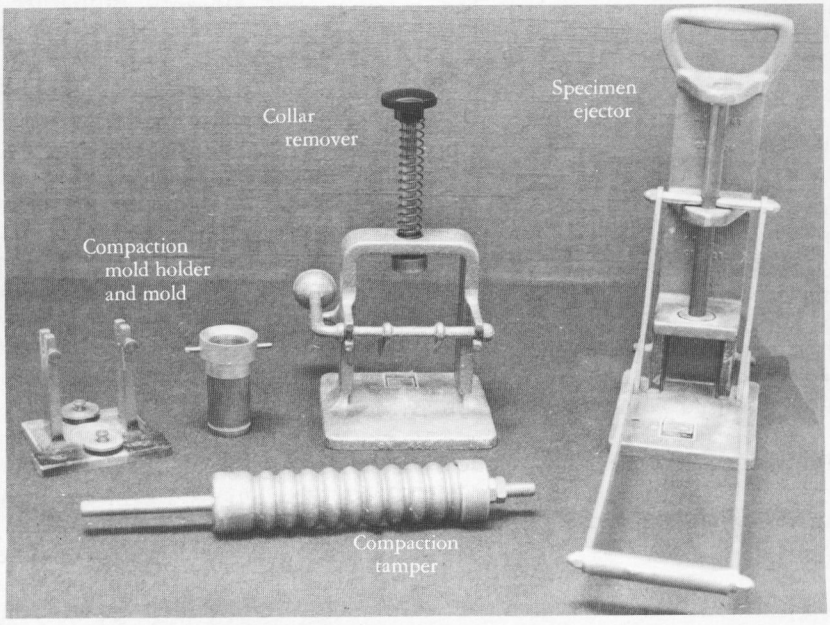

Figure 1. – Harvard miniature compaction test equipment.

soft and/or friable decomposed granite, sandstone, shale, limestone, claystone, etc., or soils affected by air and/or oven drying. Such materials must be identified before processing and the person requesting the test should verify whether standard procedures are to be followed, whether modifications are appropriate, or whether the material should be processed and tested at all. Cautionary statements must be made on test data forms and in reporting the test data.

10. Sampling, Test Specimens, and Test Units

10.1 *Sample Preparation.*–Prepare about a 4 to 6 pound (2 to 3 kg) test sample in accordance with USBR 5205.

10.2 *Specimen Preparation*:

10.2.1 Air dry the test sample obtained in subparagraph 10.1.

NOTE 1.–If 4 to 6 pounds of material are not available, carefully plan the number of specimens and corresponding moisture contents to avoid reusing material.

10.2.2 After drying, thoroughly break up the aggregations in such a manner as to avoid reducing the natural size of the particles.

10.2.3 Pass the material through a No. 4 sieve and mix thoroughly.

10.2.4 Split this material into six representative portions such that each portion contains enough material for two specimens (or one specimen if enough material is not available, see note 1).

10.2.5 Prepare a series of five specimens by adding increasing amounts of water to five of the portions prepared in accordance with subparagraph 10.2.4. The moisture contents selected are to be such that at least two specimens wet of optimum moisture and at least two specimens dry of optimum moisture are obtained. The moisture contents selected should normally vary by approximately 1-1/2 to 2 percent. One portion should be kept at the air dried moisture content in case an additional specimen is needed.

10.2.6 Optimum moisture content is estimated for a given soil type by experience or by using the following values:

Classification group USBR 5000 or 5005	*Laboratory maximum dry unit weight* lbf/ft³	kN/m³	*Optimum moisture content* %
SM	116.6	18.3	12.5
SC	118.9	18.7	12.4
ML	103.3	16.2	19.7
CL	109.3	17.2	16.7
MH	85.1	13.4	33.6
CH	95.3	15.0	25.0

Values shown represent average values (see ref. [3]).

10.2.7 Determine the amount of water to be added to each portion prepared in subparagraph 10.2.4 in accordance with the procedure outlined in appendix X1.

10.2.8 Thoroughly mix the material for each specimen to ensure an even distribution of moisture throughout.

10.2.9 Place each portion in a plastic moisture proof bag and store in accordance with the following standing times.

Classification USBR 5000 or 5005	*Minimum standing time, hours*
SM	3
ML, CL, OL, SC	18
MH, CH, OH, PT	36

10.2.10 In normal situations it is important that material from a compacted specimen *not* be remixed and reused. If, due to lack of material, this must be done, it must be noted in the report.

11. Calibration and Standardization

11.1 Verify that equipment is currently calibrated in accordance with the applicable calibration procedure. If the calibration is not current, perform the calibration before using the equipment for this procedure.

USBR 1009 Calibrating Compaction Molds
USBR 1012 Calibrating Balances or Scales
USBR 1020 Calibrating Ovens
USBR 1025 Checking Sieves

11.2 *Compaction Tamper Calibration*:

11.2.1 Determine the mass of the compaction tamper to the nearest 0.5 lbm using the 100-lbm capacity scale.

NOTE 2.–It is convenient to use a tare equal to the weight of the compaction tamper so that the resulting weight in pounds is numerically equal to the compactive effort of the tamper.

11.2.2 Place the compaction tamper on the center of the scale holding it around the barrel using both hands.

11.2.3 Push down on the barrel until it just loses contact with the two calibration nuts that are located at the top of the compaction tamper.

11.2.4 Read the scale when the tamper is in the position as described in subparagraph 11.2.3.

11.2.5 The desired compaction load is 20 lbf. Adjust the calibration nuts as necessary to obtain the appropriate scale reading. If the observed scale reading is too low, the calibration nuts need to be moved down; if the scale reading is too high, the calibration nuts need to be moved up.

11.2.6 Record the final scale reading as the tamper calibration on the "Harvard Miniature Compaction Test" form as shown on figure 2.

12. Conditioning

12.1 Place the material for each soil specimen as prepared in subparagraph 10.2 in a moisture proof plastic bag and store them in accordance with the minimum standing times outlined in subparagraph 10.2.9.

13. Procedure

13.1 All data are to be recorded on the "Harvard Miniature Compaction Test" form as shown on figure 2.

7-2325 (10-85) Bureau of Reclamation	HARVARD MINIATURE COMPACTION TEST					Designation USBR 5510 - 89	
SAMPLE NO. 15W-6	PROJECT Example			FEATURE Example			
TESTED BY	DATE	COMPUTED BY	DATE	CHECKED BY		DATE	

Blows per layer 25 No. of layers 5

Tamper calibration 20 lbf Volume of mold 62.40 cm^3

Specimen No.		1	2	3	4	5	6	7
				Wet unit weight determinations				
Desired Moisture Content	(%)	14.0	16.0	18.0	20.0	22.0		
Water added	g ☐ ml ☒	18.5	27.4	36.6	43.5	52.5		
Mass of mold + wet soil	(g)	239.9	249.1	252.9	252.8	250.4		
Mass of mold	(g)	123.4	123.4	123.4	123.4	123.4		
Mass of wet soil	(g)	116.5	125.7	129.5	129.4	127.0		
Wet unit weight	(kN/m^3)	18.3	19.8	20.4	20.3	20.0		
				Moisture content determinations				
Dish No.		L-39	L-31	L-27	50	204		
Mass of dish + wet soil	(g)	234.6	252.7	261.1	299.8	297.0		
Mass of dish + dry soil	(g)	220.8	235.3	241.7	279.0	275.4		
Mass of dish	(g)	118.3	127.2	132.1	170.7	170.1		
Mass of water	(g)	13.8	17.4	19.4	20.8	21.6		
Mass of dry soil	(g)	102.5	108.1	109.6	108.3	105.3		
Moisture content	(% of dry mass)	13.5	16.1	17.7	19.2	20.5		
				Dry unit weight determinations				
Dry Unit Weight	(kN/m^3)	16.1	17.1	17.3	17.0	16.6		

Remarks:

Auxiliary Tests:
USBR 5205 - 89
USBR 5300 - 89
USBR 5320 - 89

GPO 848-760

Figure 2. – Harvard miniature compaction test — example.

13.2 Determine the mass of the empty compaction mold to the nearest 0.1 gram and record the value on the "Harvard Miniature Compaction Test" form.

13.3 Pass the material to be compacted through a No. 4 sieve to break up any lumps of soil resulting from the specimen preparation procedure.

13.4 Each specimen must be compacted as follows:

NOTE 3.–The compaction mold and tamper must be clean, dry, and free of any lubricants.

13.4.1 Securely clamp the mold and collar to the base.

13.4.2 Place the desired amount of loose soil in the mold.

NOTE 4.–Two to three slightly heaping teaspoons are generally required for each layer.

13.4.3 Level the surface by pressing down lightly with a wood plunger.

13.4.4 Insert the tamper in the mold until it is in contact with the soil surface.

13.4.5 Press down firmly until the spring is compressed to the full calibrated load (20 lbf).

13.4.6 Release the force and shift the tamper to a new position.

13.4.7 Each of the first four tamps should be applied in separate quadrants and adjacent to the mold. The fifth tamp should be in the center, making one complete coverage.

13.4.8 Repeat the cycle outlined in subparagraph 13.4.7 until 25 tamps have been applied. The tamps should be applied at the approximate rate of one tamp per second.

13.4.9 It is important to slightly offset the location of the tamps during the compaction effort to ensure complete and even coverage of the specimen surface.

13.4.10 Repeat subparagraph 13.4.2 through 13.4.9 until five layers have been placed.

13.4.11 The top layer should extend at least 1/2 inch, but not more than 3/4 inch, into the extension collar. If, after the last layer is compacted, the specimen is too short or too long, it should be discarded and a new specimen placed.

13.4.12 Transfer the mold assembly to the collar remover and release the collar clamps.

13.4.13 Press down firmly on the piston and at the same time pull up on the handle, prying the collar loose from the compacted soil.

13.4.14 Remove the mold from the base and, using the straightedge, carefully trim away any excess soil from the top and bottom of the mold.

13.4.15 Determine the mass of the mold and the compacted soil to the nearest 0.1 gram and record the value.

13.4.16 Remove the specimen from the mold using the sample ejector.

13.4.17 Place the specimen in a suitable container for drying and determination of moisture content.

13.5 Compact the additional specimens from material as prepared in paragraph 10, repeating the procedures outlined in subparagraph 13.3 and 13.4, until at least five points have been established.

13.6 Determine the moisture content of each compacted specimen in accordance with USBR 5300.

13.7 Calculate the wet and dry unit weights for each compacted specimen.

13.8 Plot the moisture contents and corresponding dry unit weights as shown on figure 3.

13.9 If the plotted points do not fall on both sides of the optimum moisture content, additional specimens must be prepared and compacted at appropriate moisture contents.

13.10 If additional material is not available, see subparagraph 10.2.10.

13.11 Determine the specific gravity for the soil sample in accordance with USBR 5320.

13.12 Use table X2 to obtain appropriate dry unit weight and corresponding moisture content values assuming the voids are completely filled with water.

13.13 Plot the zero air voids curve as shown on figure 3 and outlined in appendix X2.

14. Calculations

14.1 Calculate the moisture content.

$$w = 100\left(\frac{A - B}{B - C}\right) \quad (1)$$

where:

w = percentage of moisture in the specimen, %
A = mass of dish and wet soil, g
B = mass of dish and dried soil, g
C = mass of dish, g
100 = convert from decimal to percent

14.2 Calculate the wet unit weight of the compacted soil specimen.

$$\gamma_{wet} = 9.81\left(\frac{A - C}{V}\right) \quad (2)$$

where:

γ_{wet} = wet unit weight of compacted soil in kilonewtons per cubic meter, kN/m³
V = volume of mold in cubic centimeters, cm³
9.81 = change g/cm³ to kN/m³ (see note 5)

NOTE 5.–Three constants are combined into one in this calculation. Density in g/cm³ is multiplied by 1000 to convert to kg/m³; that number is multiplied by the acceleration of gravity, g (9.81 m/s²), to convert to unit weight in N/m³. Divide by 1000 to convert to kN/m³.

14.3 Calculate the dry unit weight of the soil specimen.

$$\gamma_d = \frac{\gamma_{wet}}{1 + \frac{w}{100}} \quad (3)$$

where γ_d equals dry unit weight of compacted soil in kilonewtons per cubic meter, kN/m³.

7-1414 (9-85)
Bureau of Reclamation

COMPACTION - PENETRATION RESISTANCE CURVES

Designation USBR 5510 - 89

SAMPLE NO.	FEATURE	PROJECT
15W-6	Example	Example

Hole No. DH-18 Plotted by _____ Date _____

Depth 0.2-1.0 ft ☐ m ☒ Checked by _____ Date _____

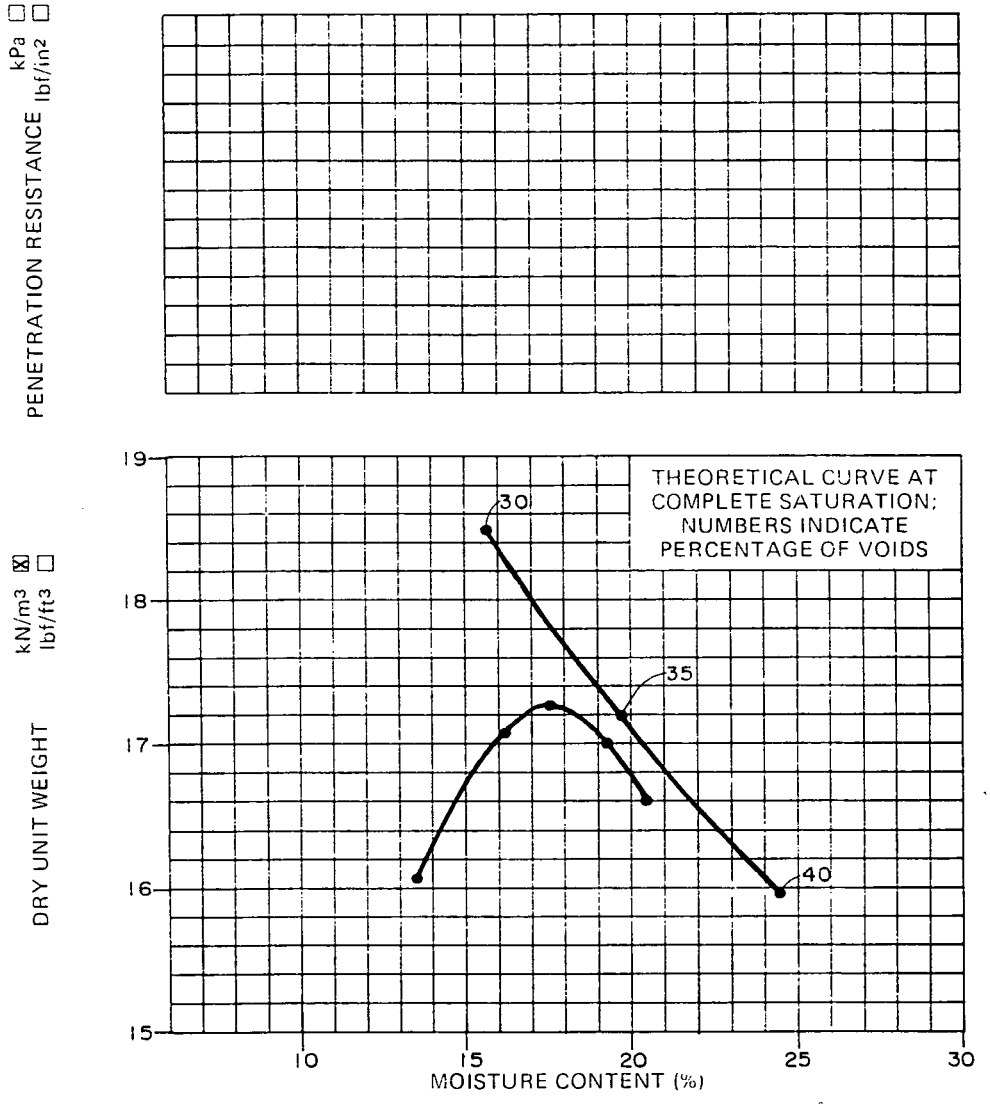

CLASSIFICATION CL

Gravel	0	%
Sand	35	%
Fines	65	%

ATTERBERG LIMITS

Liquid Limit	32	%
Plasticity Index	20	%
Shrinkage Limit	_____	%

SPECIFIC GRAVITY

Minus No. 4	2.70	
Plus No. 4	_____	
Bulk	_____	
Apparent	_____	
Absorption	_____	%

Remarks _____

COMPACTION

Method	Harvard Miniature	
Percent larger than tested	0	
Maximum dry unit weight	17.3	☒ kN/m³ ☐ lbf/ft³
Optimum moisture content	17.7	%
Degree of saturation @ opt	_____	%
Penetration resistance @ opt	_____	☐ kPa ☐ lbf/in²

GPO 848-759

Figure 3. – Moisture–dry unit weight plot — Harvard miniature example.

15. Report

15.1 The report is to consist of the following completed and checked forms:

"Harvard Miniature Compaction Test" form (fig. 2).

"Compaction–Penetration Resistance Curves" (fig. 3).

"Added Water Determination" form (fig. X1.1).

15.2 All calculations are to show a checkmark and all plotting must be checked.

16. References

[1] "Suggested Method of Test for Moisture-Density Relations of Soils Using Harvard Compaction Apparatus," *Special Procedures for Testing Soil and Rock for Engineering Purposes*, ASTM Special Publication 479, Philadelphia, PA, June 1970.

[2] Scavuzzo, Robert, "Use of the Harvard Miniature Appartus for Obtaining Moisture–Unit Weight Relationship of Soils," Bureau of Reclamation Report No. GR-84-14, 34 pp., Denver, Colo., September 1984.

[3] *Design of Small Dams*, U.S. Department of the Interior, Bureau of Reclamation 3d ed., Washington, D.C., pp. 96–97, 1987.

APPENDIX

X1. ADDED WATER DETERMINATION FOR COMPACTION TEST SPECIMEN

X1.1 Scope

X1.1.1 This appendix outlines the procedure for determining the amount of water to be added to test specimens to achieve the desired moisture contents.

X1.2 Procedure

X1.2.1 All data are to be recorded on the "Added Water Determination" form as shown on figure X1.1.

X1.2.2 The air dried moisture content of the soil specimens is to be predetermined in accordance with USBR 5300. Record the moisture content value in column (1) on the form as the *Moisture Content %, Initial* (fig. X1.1).

X1.2.3 The desired moisture content for each test specimen is predetermined. Record the values in column (2) on the form as the *Moisture Content %, Desired.*

X1.2.4 Calculate the moisture content difference for each test specimen:

$$(3) = (2) - (1) \qquad \text{(X1-1)}$$

where:
(3) = moisture content difference, %
(2) = moisture content, desired %
(1) = moisture content, initial %

Record the values for each test specimen in column (3) of the form as *Moisture Content %, Difference.*

X1.2.5 Determine the mass of each soil specimen and container. Record the value in column (4) of the form as *Mass g, Specimen and Container.*

X1.2.6 Determine the mass of the container and record the value in column (5) of the form as *Mass g, Container.*

X1.2.7 Calculate the mass of the specimen.

$$(6) = (4) - (5) \qquad \text{(X1-2)}$$

where:
(6) = mass of specimen, g
(4) = mass of specimen and container, g
(5) = mass of container, g

Record the value in column (6) of the form as *Mass g, Specimen.*

NOTE X1.1.–If a container is not needed, subparagraphs X1.2.5 through X1.2.7 may be omitted and the mass of the specimen recorded directly.

X1.2.8 Calculate the dry mass of the specimen.

$$(7) = \frac{(6)}{1 + \frac{(1)}{100}} \qquad \text{(X1-3)}$$

where:
(7) = dry mass of specimen, g
(6) = mass of specimen, g
(1) = moisture content, initial %
100 = convert from percent to decimal

Record the value in column (7) of the form as *Mass g, Dry Mass of Specimen.*

X1.2.9 Calculate the mass of water to add to each soil specimen.

$$(8) = (7)\ \frac{(3)}{100} \qquad \text{(X1-4)}$$

where:
(8) = mass of water to add, g
(7) = dry mass of specimen, g
(3) = moisture content difference, %
100 = convert from percent to decimal

Record the value in column (8) of the form as *Mass g, Water to Add.*

NOTE X1.2.–Water may be measured by volume, rather than by mass. For the purpose of this procedure, assume one gram equals one milliliter equals one cubic centimeter.

7-2327 (10-85) Bureau of Reclamation	ADDED WATER DETERMINATION		Designation USBR - 5510 - 89
SAMPLE NO. 15W-6	PROJECT Example		FEATURE Example
COMPUTED BY	DATE	CHECKED BY	DATE

Specimen No.	Moisture Content %			Mass g				
	Initial (1)	Desired (2)	Difference (3)	Specimen and Container (4)	Container (5)	Specimen (6)	Dry Mass of Specimen (7)	Water to Add (8)
1	9.5	14.0	4.5	673.7	223.7	450.0	411.0	18.5
2	9.5	16.0	6.5	686.0	223.7	462.3	422.2	27.4
3	9.5	18.0	8.5	695.5	223.7	471.8	430.9	36.6
4	9.5	20.0	10.5	677.3	223.7	453.6	414.2	43.5
5	9.5	22.0	12.5	683.7	223.7	460.0	420.1	52.5
			(2) – (1)			(4) – (5)	$100\left[\frac{(6)}{100+(1)}\right]$	$(7)\left[\frac{(3)}{100}\right]$

Remarks: For Harvard Miniature Compaction

Auxiliary Tests:

USBR 5300 - 89

GPO 848-762

Figure X1.1. - Added water determination — example.

X2. ZERO AIR VOIDS CURVE DETERMINATION — Curve of Complete Saturation

X2.1 Scope

X2.1.1 This appendix outlines the procedure for obtaining and plotting appropriate dry unit weight and corresponding moisture content values given the specific gravity of the soil along with a completed moisture–unit weight plot.

X2.2 Procedure

X2.2.1 Predetermine the specific gravity of the soil specimen in accordance with USBR 5320.

X2.2.2 Obtain a completed moisture–unit weight plot for the soil from a compaction test.

X2.2.3 Use table X2 to obtain appropriate moisture–weight points for a given specific gravity.

X2.2.4 Enter the table with the appropriate specific gravity.

X2.2.5 Multiply the dry unit weight values given by 0.1571 to obtain kN/m³.

X2.2.6 Select at least three values of moisture contents and corresponding dry unit weights that approximately bracket the maximum and minimum dry unit weight–moisture content points obtained in the compaction test.

X2.2.7 Plot the points selected as shown on figure 3. The points are to be labeled with the corresponding percentage of void values also found in table X2.

NOTE X2.1.–The values found in table X2 may be calculated using the following equations:

$$\gamma_d = \gamma_w G_s \left(1 - \frac{n}{100}\right) \qquad \text{(X2-1)}$$

$$w = \frac{n\gamma_w}{\gamma_d} \qquad \text{(X2-2)}$$

where:

γ_d = dry unit weight of soil in pounds force per cubic foot, lbf/ft³; or kilonewtons per cubic meter, kN/m³

γ_w = unit weight of water in units identical to those used with γ_d

G_s = specific gravity of the soil

n = porosity, %

w = water content, %

Table X2. – Points for curve of complete saturation.

Percent voids	Percent voids 10	15	20	25	30	35	40	45	50	55	60
Specific gravity	Dry unit weight in pounds force per cubic foot Moisture content in percent										
2.45	137.6	130.0	122.4	114.8	107.1	99.5	91.8	84.2	76.5	68.8	61.2
	4.5	7.2	10.2	13.6	17.5	22.0	27.2	33.4	40.8	49.9	61.3
2.46	138.3	130.6	122.8	115.2	107.5	99.8	92.2	84.6	76.8	69.2	61.5
	4.5	7.2	10.2	13.5	17.4	21.9	27.1	33.2	40.7	49.6	60.9
2.47	138.9	131.2	123.5	115.7	108.0	100.4	92.6	84.9	77.2	69.4	61.7
	4.5	7.1	10.1	13.5	17.3	21.8	27.0	33.1	40.5	49.5	60.7
2.48	139.5	131.6	124.0	116.2	108.5	100.7	93.0	85.2	77.5	69.7	62.0
	4.5	7.1	10.1	13.4	17.3	21.7	26.9	33.0	40.3	49.3	60.4
2.49	140.0	132.2	124.4	116.6	108.9	101.1	93.3	85.6	77.8	70.0	62.2
	4.5	7.1	10.1	13.4	17.2	21.6	26.8	32.8	40.2	49.2	60.3
2.50	140.4	132.6	124.8	117.0	109.2	101.4	93.6	85.9	78.1	70.2	62.4
	4.4	7.1	10.0	13.3	17.1	21.5	26.7	32.7	40.0	48.9	60.0
2.51	141.0	133.2	125.4	117.5	109.7	101.9	94.1	86.3	78.2	70.6	62.7
	4.4	7.0	10.0	13.3	17.1	21.4	26.5	32.6	39.9	48.7	59.8
2.52	141.6	133.8	125.9	118.1	110.2	102.4	94.4	86.6	78.7	70.8	63.0
	4.4	7.0	9.9	13.2	17.0	21.4	26.5	32.4	39.7	48.5	59.5
2.53	142.2	134.4	126.3	118.5	110.5	102.7	94.7	86.9	79.0	71.2	63.2
	4.4	7.0	9.9	13.2	16.9	21.3	26.3	32.3	39.5	48.3	59.3
2.54	142.8	134.9	126.9	119.0	111.1	103.1	95.2	87.2	79.3	71.4	63.4
	4.4	6.9	9.9	13.1	16.8	21.2	26.2	32.2	39.4	48.1	59.1
2.55	143.2	135.3	127.3	119.4	111.4	103.4	95.5	87.5	79.6	71.6	63.6
	4.4	6.9	9.8	13.1	16.8	21.1	26.2	32.1	39.2	47.9	58.9
2.56	143.8	135.8	127.8	119.8	111.8	103.8	95.8	87.9	79.9	71.9	63.9
	4.3	6.9	9.8	13.0	16.8	21.1	26.1	32.0	39.1	47.7	58.6
2.57	144.3	136.3	128.3	120.3	112.3	104.2	96.2	88.2	80.2	72.2	64.1
	4.3	6.9	9.7	13.0	16.7	21.0	26.0	31.8	38.9	47.5	58.4
2.58	144.9	136.8	128.8	120.7	112.7	104.6	96.6	88.5	80.5	72.4	64.4
	4.3	6.8	9.7	12.9	16.7	20.9	25.9	31.7	38.8	47.4	58.1
2.59	145.5	137.4	129.3	121.2	113.1	105.1	97.0	88.9	80.8	72.7	64.6
	4.3	6.8	9.7	12.9	16.6	20.8	25.6	31.6	38.6	47.2	57.9
2.60	146.0	137.9	129.8	121.7	113.6	105.5	97.3	89.2	81.1	73.0	64.9
	4.3	6.8	9.6	12.9	16.5	20.7	25.7	31.5	38.5	47.0	57.7
2.61	146.6	138.4	130.3	122.2	114.0	105.9	97.7	89.6	81.4	73.3	65.1
	4.3	6.7	9.6	12.8	16.4	20.6	25.6	31.3	38.3	46.8	57.5
2.62	147.2	138.9	130.8	122.6	114.5	106.3	98.1	89.9	81.8	73.6	65.4
	4.2	6.7	9.6	12.7	16.4	20.6	25.5	31.2	38.2	46.6	57.3
2.63	147.7	139.5	131.3	123.1	114.9	106.7	98.5	90.3	82.1	73.8	65.6
	4.2	6.7	9.5	12.7	16.3	20.5	25.4	31.1	38.0	46.5	57.1
2.64	148.3	140.0	131.8	123.6	115.3	107.1	98.9	90.6	82.4	74.1	65.9
	4.2	6.7	9.5	12.6	16.3	20.4	25.3	31.0	37.9	46.3	56.8
2.65	148.8	140.6	132.3	124.0	115.8	107.5	99.2	91.0	82.7	74.4	66.1
	4.2	6.6	9.4	12.6	16.2	20.3	25.2	30.8	37.7	46.1	56.6
2.66	149.4	141.1	132.8	124.5	116.2	107.9	99.6	91.3	83.0	74.7	66.4
	4.2	6.6	9.4	12.5	16.1	20.3	25.1	30.8	37.6	45.9	56.4
2.67	150.0	141.6	133.3	125.0	116.6	108.3	100.0	91.6	83.3	75.0	66.6
	4.2	6.6	9.4	12.5	16.1	20.2	25.0	30.7	37.5	45.7	56.2
2.68	150.5	142.2	133.8	125.4	117.1	108.7	100.3	92.0	83.6	75.3	66.9
	4.1	6.6	9.3	12.4	16.0	20.1	24.9	30.5	37.3	45.6	56.0
2.69	151.1	142.7	134.3	125.9	117.5	109.1	100.7	92.3	83.9	75.5	67.1
	4.1	6.6	9.3	12.4	16.0	20.0	24.8	30.4	37.2	45.5	55.8
2.70	151.6	143.2	134.8	126.4	117.9	109.5	101.1	92.7	84.2	75.8	67.4
	4.1	6.5	9.3	12.3	15.9	19.9	24.7	30.3	37.0	45.3	55.6
2.71	152.2	143.7	135.3	126.8	118.4	109.9	101.5	93.0	84.6	76.1	67.6
	4.1	6.5	9.2	12.3	15.8	19.9	24.6	30.2	36.9	45.1	55.4
2.72	152.8	144.3	135.8	127.3	118.8	110.3	101.8	93.4	84.9	76.4	67.9
	4.1	6.5	9.2	12.3	15.8	19.8	24.6	30.1	36.8	44.9	55.2
2.73	153.3	144.8	136.3	127.8	119.3	110.7	102.2	93.7	85.2	76.7	68.1
	4.1	6.4	9.2	12.2	15.7	19.7	24.4	29.9	36.6	44.7	55.0
2.74	153.9	145.3	136.8	128.2	119.7	111.1	102.6	94.0	85.5	76.9	68.4
	4.1	6.4	9.1	12.2	15.7	19.7	24.4	29.9	36.5	44.6	54.8

Table X2. – Points for curve of complete saturation—Continued.

Percent voids	Percent voids										
	10	15	20	25	30	35	40	45	50	55	60
Specific gravity	Dry unit weight in pounds force per cubic foot Moisture content in percent										
2.75	154.4	145.9	137.3	128.7	120.1	111.5	103.0	94.4	85.8	77.2	68.6
	4.0	6.4	9.1	12.1	15.6	19.6	24.3	29.8	36.4	44.4	54.6
2.76	155.0	146.5	137.8	129.1	120.6	111.9	103.3	94.7	86.2	77.5	68.9
	4.0	6.4	9.1	12.1	15.7	19.5	24.2	29.7	36.2	44.3	54.4
2.77	155.6	147.0	138.3	129.6	121.0	112.4	103.7	95.1	86.5	77.8	69.2
	4.0	6.4	9.0	12.0	15.5	19.4	24.0	29.5	36.2	44.2	54.2
2.78	156.1	147.5	138.8	130.1	121.4	112.8	104.1	95.4	86.8	78.1	69.4
	4.0	6.4	9.0	12.0	15.4	19.4	23.9	29.4	36.0	44.0	54.0
2.79	156.8	148.1	139.3	130.6	121.9	113.2	104.5	95.8	87.1	78.4	69.7
	4.0	6.3	9.0	12.0	15.3	19.3	23.8	29.3	35.9	43.8	53.8
2.80	157.4	148.6	139.8	131.0	122.3	113.6	104.8	96.1	87.5	78.7	70.0
	4.0	6.3	8.9	11.9	15.3	19.2	23.8	29.2	35.7	43.6	53.5
2.81	157.8	149.0	140.0	131.5	122.7	114.0	105.2	96.4	87.7	78.9	70.1
	4.0	6.3	8.9	11.9	15.2	19.2	23.7	29.1	35.6	43.4	53.4
2.82	158.4	149.6	140.8	132.0	123.2	114.4	105.6	96.8	88.0	79.2	70.4
	3.9	6.3	8.9	11.8	15.2	19.1	23.6	29.0	35.5	43.3	53.2
2.83	159.0	150.2	141.3	132.4	123.6	114.8	106.0	97.1	88.3	79.5	70.7
	3.9	6.2	8.8	11.8	15.1	19.0	23.6	28.9	35.3	43.2	53.0
2.84	159.6	150.7	141.8	132.9	124.1	115.2	106.3	97.5	88.7	79.8	70.9
	3.9	6.2	8.8	11.7	15.1	18.9	23.5	28.8	35.2	43.0	52.8
2.85	160.1	151.2	142.2	133.4	124.5	115.6	106.7	97.9	89.0	80.1	71.2
	3.9	6.2	8.8	11.7	15.0	18.9	23.4	28.7	35.1	42.9	52.6
2.86	160.7	151.8	142.8	134.9	124.9	116.0	107.1	98.2	89.3	80.3	71.4
	3.9	6.2	8.7	11.6	15.0	18.8	23.3	28.6	35.0	42.8	52.5
2.87	160.1	151.2	143.3	134.3	125.4	116.4	107.5	98.5	89.6	80.7	71.7
	3.9	6.2	8.7	11.6	14.9	18.8	23.2	28.5	34.8	42.5	52.3
2.88	161.8	152.8	143.8	134.8	125.8	116.8	107.8	98.8	89.9	80.9	71.9
	3.9	6.1	8.7	11.6	14.9	18.7	23.2	28.4	34.7	42.4	52.1
2.89	162.4	153.4	144.2	135.2	126.2	117.2	108.2	99.2	90.2	81.2	72.2
	3.8	6.1	8.7	11.5	14.8	18.6	23.0	28.3	34.6	42.3	51.9
2.90	162.9	153.9	144.8	135.7	126.7	117.6	108.6	99.5	90.5	81.5	72.4
	3.8	6.1	8.6	11.5	14.8	18.6	23.0	28.2	34.5	42.1	51.7

UNITED STATES DEPARTMENT OF THE INTERIOR
BUREAU OF RECLAMATION

USBR 5515-89

PROCEDURE FOR

PERFORMING LABORATORY COMPACTION OF SOILS CONTAINING GRAVEL

INTRODUCTION

This procedure is under the jurisdiction of the Geotechnical Services Branch, code D-3760, Research and Laboratory Services Division, Denver Office, Denver, Colorado. The procedure is issued under the fixed designation USBR 5515. The number immediately following the designation indicates the year of acceptance or the year of last revision.

1. Scope

1.1 This designation outlines the procedure for performing laboratory compaction of soils using a 185.7-lbm hammer and an 18.0-inch drop. It exerts 12,375 ft·lbf/ft^3 compactive effort on a specimen having an approximate volume of 1.5 ft^3.

1.2 This procedure is performed to determine the relationship between the moisture content of soils containing gravel [3-in (75-mm) maximum size] and the resulting dry unit weight when the soil is compacted using a large mechanical compactor.

1.3 The maximum dry unit weight and optimum moisture content of the minus No. 4 (4.75-mm) fraction of soil in the sample may be determined in accordance with USBR 5500 or USBR 7240.

1.4 The large mechanical compactor is designed to impart approximately the same energy per unit volume (12,375 ft·lbf/ft^3) to a soil as the mechanical compactor described in USBR 5500.

1.5 This procedure may be used to prepare test specimens to determine the permeability of soil containing gravel as described in USBR 5605.

1.6 This procedure is normally performed for soils containing more than 15-percent fines. It may be used, under certain circumstances for soils containing 5 to 15 percent fines.

2. Auxiliary Tests

2.1 A test sample must be prepared in accordance with USBR 5205 prior to performing this procedure.

2.2 The gradation analysis must be determined in accordance with USBR 5325.

2.3 The optimum moisture content and maximum dry unit weight of the minus No. 4 (4.75-mm) fraction may be determined in accordance with USBR 5500 or USBR 7240.

2.4 The bulk specific gravity (ovendry) of the plus No. 4 (4.75-mm) fraction and percent absorption of the plus No. 4 (4.75-mm) fraction must be determined in accordance with USBR 5320.

2.5 The moisture content must be determined in accordance with USBR 5300 as part of performing this designation.

3. Applicable Documents

3.1 *USBR Procedures*:

USBR 1007 Calibrating Dial Indicators
USBR 1010 Calibrating Unit Weight Measures
USBR 1012 Calibrating Balances or Scales
USBR 1415 Calibrating Laboratory Mechanical Compactors
USBR 3900 Standard Definitions of Terms and Symbols Relating to Soil Mechanics
USBR 5000 Determining Unified Soil Classification (Laboratory Method)
USBR 5205 Preparing Soil Samples by Splitting or Quartering
USBR 5300 Determining Moisture Content of Soil and Rock by the Oven Method
USBR 5320 Determining Specific Gravity of Soils
USBR 5325 Performing Gradation Analysis of Gravel Size Fraction of Soils
USBR 5500 Performing Laboratory Compaction of Soils — 5.5-lbm Rammer and 18-inch Drop
USBR 5605 Determining Permeability and Settlement of Soils Containing Gravel
USBR 7240 Performing Rapid Method of Construction Control

4. Summary of Method

4.1 Gravelly soil is placed in three equal layers and compacted in a mold to a volume of 1.487±0.057 ft^3. Compaction is obtained using a 185.7-lbm hammer dropped 22 times per layer from a height of 18 inches. This imparts a total energy per unit volume of material of 12,368±481 ft·lbf/ft^3.

4.2 The compacted specimen height and mass are determined and the specimen removed from the mold. The moisture content is determined and the dry unit weight calculated.

4.3 Three or more specimens are compacted at different moisture contents—varying by approximately 2 percentage points—to establish a relationship between the dry unit weight and the moisture content of the soil when compacted with the given compactive energy.

4.4 The moisture content–dry unit weight data points are plotted and a smooth curve is visually fitted to the data. Optimum moisture content and maximum unit weight values are determined.

4.5 Specimens may be prepared using this procedure for subsequent determination of permeability of soils containing gravel using USBR 5605. A 1/4-inch (6.3-mm) thick compressible closed cell rubber liner is attached to the inside perimeter of the mold to inhibit leakage between the test cylinder wall and compacted soil specimen.

5. Significance and Use

5.1 The optimum moisture content–maximum dry unit weight relationship is used to evaluate the state of compactness of most cohesive soil masses which occur naturally or are placed mechanically (fill).

5.2 The moisture content for most efficient compaction (referred to as optimum moisture content), at which the maximum dry unit weight is achieved using a given compactive effort, can be determined from the moisture content–dry unit weight relationship established by the test results.

5.3 The engineering properties of a given soil mass, such as shear strength, compressibility, and permeability can vary considerably when compacted by various methods and at various moisture contents.

6. Terminology

6.1 Definitions are in accordance with USBR 3900. Terms of particular significance are:

6.1.1 *Compaction Curve.*–The curve showing the relationship between the dry unit weight and the moisture content of a soil compacted with a given compactive effort (ASTM definition).

6.1.2 *Maximum Unit Weight* (γ_{max}).–The dry unit weight defined by the peak of a compaction curve.

6.1.3 *Optimum moisture content* (w_o).–The moisture content at which a soil can be compacted to the maximum dry unit weight by a given compactive effort (ASTM).

6.1.4 *Zero air voids curve.*–The curve showing the relationship between dry unit weights and corresponding moisture contents, assuming that all of the voids are completely filled with water.

7. Interferences

7.1 Variations in hammer drop height, hammer mass, number of blows per soil layer, mass of a soil layer, or specimen volume will result in erroneous test data because of nonstandard compactive effort. To ensure a standard compactive effort, the large mechanical compactor must be inspected, the hammer drop height and mass checked yearly, and the compaction mold must be inspected and calibrated in accordance with USBR 1010.

8. Apparatus

8.1 *General Apparatus*:

8.1.1 *Balances or Scales.*–Typical balances or scales used for this designation are:

Application	*Readable to*	*Approximate capacity*
Moisture content	0.1 g	500 g
Mass of compaction specimen (100 lbm or less)	0.01 lbm	100 lbm
Mass of compaction specimen (greater than 100 lbm)	0.1 lbm	500 lbm

8.1.2 *Bar, Digging.*–A metal bar about 4 feet long by 1-1/2 inches in diameter.

8.1.3 *Desiccator.*–An enclosed container, with a moisture absorbing chemical compound inside, in which a heated soil sample is cooled while maintaining zero change in moisture content.

8.1.4 *Dish, Evaporating.*–A suitable dish resistant to corrosion or changes in mass when subjected to repeated heating, cooling, or cleaning.

8.1.5 *Drying Oven.*–An oven, thermostatically controlled, preferably of the forced-draft type, and capable of maintaining a uniform temperature of 230±9 °F (110±5 °C) throughout the drying chamber.

8.1.6 *Graduated Cylinder.*–1000-mL capacity, graduated to 10 mL.

8.1.7 *Micrometer, Inside.*–Caliper, rule, or other suitable device having a range to at least 20 inches, readable to 1/32-inch.

8.1.8 *Mixing Pans* (fig 1).–Two large metal mixing pans, approximately 3- by 2-feet by 4-inches deep.

8.1.9 *Moisture Proof Containers* (fig. 1).–Large moisture proof bag or container for storing material.

8.1.10 *Rod.*–A straight metal rod, 1/2-inch diameter, about 2 feet long.

8.1.11 *Rubber Mallet* (fig. 2).–A rubber mallet having approximately a 5-inch-diameter face.

8.1.12 *Shovel* (fig 1).–D-handle, No. 4 scoop shovel.

8.1.13 *Sieve.*–U.S.A. Standard series No. 4 sieve (4.75 mm) with stand, conforming to the requirements of USBR 1025.

8.1.14 *Spatula.*–A spatula or scraper, 4-inch blade.

8.1.15 *Sponge Rubber Liner.*–1/4-inch-thick closed cell, medium density (12 to 16 lbm/ft^3) sponge rubber liner with skin on both sides.

8.1.16 *Sprinkler Can.*–With spout, approximate capacity of 2 gallons.

8.1.17 *Straightedge* (fig. 2).–A stiff metal straightedge about 24-inches long. The scraping edge must be beveled if it is thicker than 1/8 inch.

8.1.18 *Tamping Hammer* (fig. 2).–Small tamping hammer having a mass of about 9 lbm and a 4-inch-diameter face.

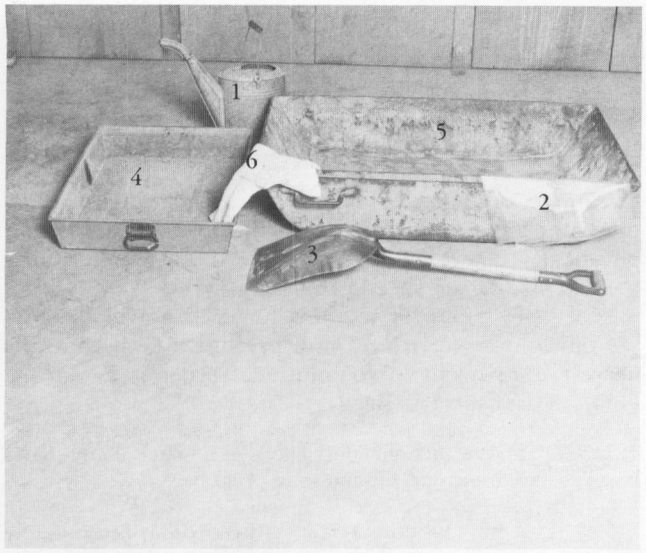

Figure 1. – Mixing equipment: 1) sprinkler can, 2) moisture bag, 3) shovel, 4) large moisture pan, 5) mixing pan, and 6) towel.

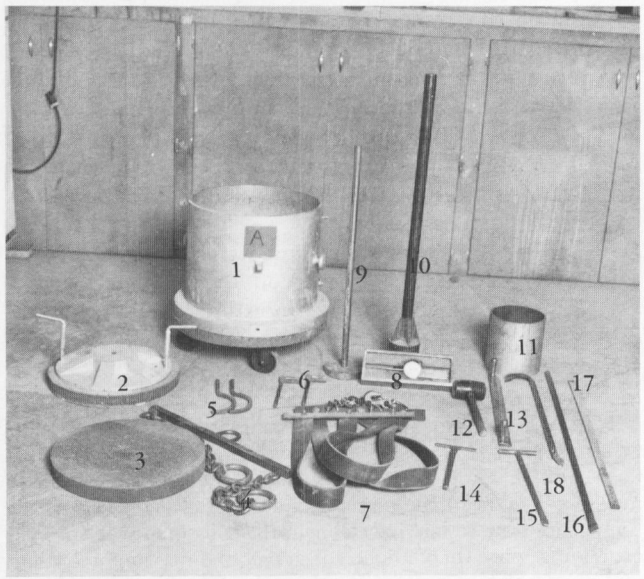

Figure 2. – Compaction equipment: 1) compaction mold, 2) loading plate with porous disc attached, 3) porous disc, 4) yoke — use to lift mold, 5) collar wrench, 6) modified spanner wrench, 7) four-point sling, 8) dial indicator with case, 9) small tamping hammer, 10) large tamping hammer, 11) 9-inch ring gauge, 12) rubber mallet, 13) straightedge, 14) scraper, 15) T-bar, 16) digging bar, 7) yardstick, and 18) pry bar.

8.1.19 *Tamping Hammer* (fig 2).–Large tamping hammer having a mass of about 40 lbm and a 6-inch-diameter face.

8.1.20 *T-Bar* (fig. 2).–A T-bar with chisel point, 18-inches long.

8.1.21 *Towels* (fig. 1).–Large cotton bath towels.

8.1.22 *Yardstick* (fig. 2).–A 36-inch yardstick having at least 1/4-inch markings.

8.2 *Equipment Unique to This Procedure* (figs. 2 and 3):

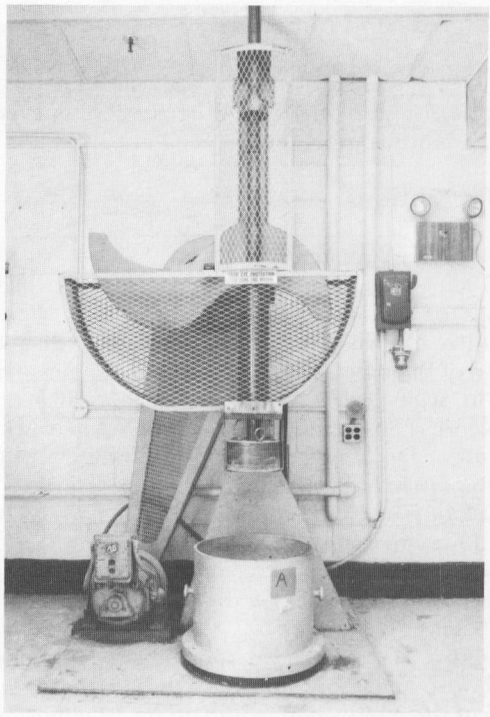

Figure 3. – Large mechanical compactor and compaction mold.

8.2.1 *Compaction Mold.*–A 20-inch nominal inside-diameter steel or aluminum cylinder, a minimum of 16-inches deep. A 1/4-inch thick, compressible, closed-cell rubber liner may be attached to the inside wall of the mold.

8.2.2 *Dial Indicator.*–Dial indicator with holders for 20-inch cylinder, continuous dial, 0.001-inch graduations, 3.000-inch travel.

8.2.3 *Loading Plate.*–A steel or aluminum loading plate with a porous disk attached to place on top of compacted specimen. (Porous disk may be attached to the loading plate with weather-stripping adhesive.)

8.2.4 *Mechanical Compactor.*–A large mechanical device with a 185.7-lbm hammer, fabricated to achieve an 18-inch drop. The stem of the hammer is grooved at 3-inch intervals. A locking collar is secured in the groove. The position of the collar is adjusted to maintain an 18-inch drop for successive soil layers.

8.2.5 *Spanner Wrench* (modified).–A 10-inch metal "F"-shaped wrench used to rotate the mold approximately one-sixth revolution after each blow of the large mechanical compactor.

8.2.6 *Porous Disk.*–Coarse grade carborundum porous disks, 19-1/8-inch diameter by 2-inch thick.

8.2.7 *Ring Gauge.*–A specimen thickness ring gauge, 10-inch outside diameter by 9.000±0.001-inch high made from metal pipe.

8.2.8 *Yoke.*–A yoke used to lift the compaction mold, 26-inch long by 1-inch square metal bar with 5-inch diameter metal rings attached to ends of 24-inch long 1/2-inch logging chain.

9. Reagents and Materials

9.1 Tapwater that is free of acids, alkalies, or oils and is suitable for drinking should be used whenever water is required in this procedure.

10. Precautions

10.1 *Safety Precautions*:

10.1.1 This designation may involve hazardous materials, operations, and equipment.

10.1.2 To ensure that the hammer will not strike the edge of the mold, the compaction mold must be seated firmly in place on the center pin of the compaction base plate before the machine is started.

10.1.3 Do not place hands near the top of the mold when the mechanical compactor is in operation.

10.1.4 The compaction mold should always be lifted by the hoist apparatus using the lifting yoke.

10.1.5 Care must be taken to ensure that the yoke is fastened to both sides of the compaction mold before lifting begins.

10.1.6 The suspended compaction mold should be rotated with the T-bar and the straight rod to improve control of the mold when it is in an inverted position.

10.2 *Technical Precautions*:

10.2.1 The test specimen should be kept covered, and placed and compacted as quickly as possible to minimize unrecorded moisture loss.

10.2.2 Due to the effects of sampling, handling, processing, and testing on some materials, results of this test may not reflect in-place conditions or the properties of the material after processing and placement during construction. Of particular concern are materials such as soft and/or friable decomposed granite, sandstone, shale, limestone, claystone, etc. or soils affected by air and/or oven drying. Such materials must be identified before processing and the person requesting the test should verify whether standard procedures are to be followed, whether modifications are appropriate, or whether the material should be processed and test at all. Cautionary statements must be made on test data forms and in reporting the test data.

11. Sampling, Test Specimens, and Test Units

11.1 All data are to be recorded on the "Large Scale Compaction Test" data sheets 1 and 3, figures 4 and 5, respectively.

11.2 *Sample Preparation*:

11.2.1 Prepare a test sample in accordance with USBR 5205. Approximately 800 lbm of minus 3-inch (75 mm) material is required to prepare 3 compaction specimens. An additional 200 lbm of minus 3-inch material is required for each additional specimen.

11.2.2 If sufficient new material is unavailable, the material may be reused if the coarse grained fraction is not friable (see subpar. 10.2.2) and the specimen is screened before reuse. If material must be reused, indicate this fact on the data sheets.

11.2.3 Perform the following soil tests prior to preparing the compaction test specimens.

11.2.3.1 Perform a gradation analysis on the entire sample according to USBR 5325. Record the following results on the indicated forms:

(a) Percent minus No. 4 (4.75 mm) material in sample, and percent plus No. 4 (4.75 mm) material in sample; record the values to the nearest 0.1 percent on lines (1) and (2) on data sheet 1 (fig. 4) and on lines (4) and (5) on data sheet 3 (fig. 5).

(b) Percent retained for each gravel size and percent minus No. 4 (4.75 mm); record the values to the nearest 0.1 percent in columns (a) through (e) on line (15a) on data sheet 1 (fig. 4).

NOTE 1.–Store the individual gravel size material and minus No. 4 material separately in moisture proof bags.

11.2.3.2 Obtain a test sample of approximately 0.5 lbm of the minus No. 4 material and determine the moisture content in accordance with USBR 5300—if not previously determined in subparagraph 11.2.3.1.

11.2.3.3 Obtain a test sample of approximately 45 lbm of the minus No. 4 (4.75 mm) material and determine the maximum dry unit weight and optimum moisture content in accordance with USBR 5500 or USBR 7240. Record the following results on the indicated forms:

(a) Maximum dry unit weight of minus No. 4 (4.75 mm) material and optimum moisture content to 0.1 lbf/ft^3 and 0.1 percent respectively, on lines (4) and (6), respectively (data sheet 1).

(b) Maximum dry unit weight of minus No. 4 (4.75 mm) material to 0.1 lbf/ft^3 on line (3) (data sheet 3).

11.2.3.4 Select the moisture content for the minus No. 4 material for compacting the first specimen and record the value on line (7) (data sheet 1).

NOTE 2.–For soils with gravel contents less than or equal to 40 percent, it is suggested that the minus No. 4 material for the first compaction specimen be prepared at optimum moisture content of the minus No. 4 material (w_o). Large scale compaction test results have shown that on some types of soils containing more than 40-percent gravel, the maximum dry unit weight of total material was achieved when the minus No. 4 moisture content was three percentage points wet of optimum (w_o+3.0).

11.2.3.5 Obtain a test sample of plus No. 4 material and determine the average apparent specific gravity and the average absorption in accordance with USBR 5320. The mass of the test sample required is determined by the maximum size of gravel in the sample.

Particle sizes in	*Test sample mass required, lbm*
No. 4 - 3/4	5
No. 4 - 3/8	5
No. 4 - 1-1/2	11
No. 4 - 3	33

Record the value of specific gravity of the plus No. 4 (4.75 mm) material on line (5) on data sheet 1, and on line (1) on data sheet 3.

7-2374 (10-86) Bureau of Reclamation	LARGE SCALE COMPACTION TEST-DATA SHEET 1		Designation USBR 5515-89
SAMPLE NO. 38A-18	PROJECT Example	FEATURE Example	
TESTED BY DATE	COMPUTED BY DATE	CHECKED BY DATE	

(1) PERCENT MINUS NO. 4 (4.75 mm) MATERIAL IN SAMPLE	(%)	64.6
(2) PERCENT PLUS NO. 4 (4.75 mm) MATERIAL IN SAMPLE	(%)	35.4
(3) PERCENT OF MAXIMUM DRY UNIT WEIGHT OF MINUS NO. 4 (4.75 mm) MATERIAL EXPRESSED AS A DECIMAL = $(1/\gamma_d \times 100^*)$	(%)	0.90
(4) MAXIMUM DRY UNIT WEIGHT OF MINUS NO. 4 (4.75 mm) (γ_d)	(lbf/ft^3)	111.1
(5) AVERAGE BULK SPECIFIC GRAVITY (OVENDRIED MATERIAL)		2.50
(6) OPTIMUM MOISTURE CONTENT	(%)	14.5
(7) DESIRED COMPACTION MOISTURE CONTENT OF MINUS NO. 4 (4.75 mm)	(%)	14.5
(8) AVERAGE ABSORPTION OF PLUS NO. 4 (4.75 mm) MATERIAL	(%)	1.6
(9) MAXIMUM DRY UNIT WEIGHT OF TOTAL MATERIAL = $\frac{100^*}{\frac{(1)}{(3)(4)} + \frac{(2)}{(5)\,62.43^{**}}}$	(lbf/ft^3)	114.6
(10) AREA OF COMPACTION MOLD ☐ WITH LINER ☒ WITHOUT LINER	(ft^2)	2.080
(11) RING GAUGE HEIGHT	(in)	9.000
(12) TOTAL DRY MASS OF MATERIAL REQUIRED FOR ONE SPECIMEN = $\frac{(9)(10)(11)}{12^{***}}$	(lbm)	178.78
(13) THEORETICAL MOISTURE CONTENT OF TOTAL MATERIAL = $\frac{(1)(7)}{100^*} + \frac{(2)(8)}{100^*}$	(%)	9.9
(14) MASS OF DRY MATERIAL REQUIRED FOR A SINGLE LIFT = $\frac{(12)}{3}$	(lbm)	59.59

MASS OF INDIVIDUAL PARTICLE SIZES REQUIRED:

SIEVE SIZE		1 1/2-inch (37.5 mm) (a)	3/4-inch (19.0 mm) (b)	3/8-inch (9.5 mm) (c)	NO. 4 (4.75 mm) (d)	MINUS NO. 4 (4.75 mm) (e)
(15a) PERCENT RETAINED	(%)	4.3	8.7	9.6	12.8	64.6
(15b) DRY MASS REQUIRED PER SPECIMEN[1] (lbm) = (12)(15a)[2](.011)****		9.46	17.11	18.88	25.17	127.04
(15c) DRY MASS REQUIRED PER LIFT[1] (lbm) = $\frac{(14)(15a)}{100^*}$[2]		2.56	5.18	5.72	7.63	38.50
(15d) MOISTURE CONTENT	(%)	1.6	1.6	1.6	1.6	14.5
(15e) WET MASS REQUIRED PER LIFT [1] (lbm) = (15c) $[1 + \frac{(15d)}{100^*}]$		2.60	5.26	5.81	7.75	44.08

100 * = Constant to convert percent to decimal
62.43 lbf/ft^3 ** = Unit weight of water at 4° C
12*** = Constant to convert in to ft, and lbf to lbm
0.011**** = Constant to convert percent to decimal, and to provide excess test material

1Mass of material plus 10 percent excess for one compaction specimen
2Use each size of material in line (15a) respectively

REMARKS: _____

GPO 852-310

Figure 4. – Large scale compaction test — data sheet 1 — example.

7-2376 (10-86)
Bureau of Reclamation

LARGE SCALE COMPACTION TEST-DATA SHEET 3

Designation USBR 5515-89

SAMPLE NO.	PROJECT	FEATURE
38A-18	Example	Example
TESTED BY DATE	COMPUTED BY DATE	CHECKED BY DATE

SPECIMEN NO.		1	2	3	4	5
(1) AVERAGE BULK SPECIFIC GRAVITY (OVENDRY MATERIAL)		2.50	2.50	2.50		
(2) AVERAGE ABSORPTION OF PLUS NO. 4 (4.75 mm) MATERIAL	(%)	1.6	1.6	1.6		
(3) MAXIMUM DRY UNIT WEIGHT OF MINUS NO. 4 (4.75 mm) MATERIAL	(lbf/ft^3)	111.1	111.1	111.1		
(4) PERCENT OF MINUS NO. 4 (4.75 mm) MATERIAL IN SAMPLE	(%)	64.6	64.6	64.6		
(5) PERCENT OF PLUS NO. 4 (4.75 mm) MATERIAL IN SAMPLE	(%)	35.4	35.4	35.4		
(6) DRY UNIT WEIGHT OF COMPACTION SPECIMEN	(lbf/ft^3)	119.7	114.2	115.2		
(7) MOISTURE CONTENT OF COMPACTION SPECIMEN (TOTAL)	(%)	9.6	12.0	7.6		
(8) MOISTURE CONTENT OF MINUS NO. 4 (4.75 mm) MATERIAL = (7) - (2)	(%)	8.0	10.4	6.0		
(9) CORRECTED MOISTURE CONTENT OF MINUS NO. 4 (4.75 mm) MATERIAL = $\frac{(8)\ 100^{*}}{(4)}$	(%)	12.4	16.1	9.3		
(10) DRY MASS OF PLUS NO. 4 (4.75 mm) PER CUBIC FOOT OF TOTAL MATERIAL = $\frac{(5)(6)^{**}}{100^{*}}$	(lbm)	42.37	40.43	40.78		
(11) VOLUME OF PLUS NO. 4 (4.75 mm) MATERIAL PER CUBIC FOOT OF TOTAL MATERIAL MATERIAL = $\frac{(10)}{(1)\ 62.43^{***}}$	(ft^3)	0.271	0.259	0.261		
(12) VOLUME OF MINUS NO. 4 (4.75 mm) PER CUBIC FOOT OF TOTAL MATERIAL = 1.000 - (11)	(ft^3)	0.729	0.741	0.739		
(13) DRY MASS OF MINUS NO. 4 (4.75 mm) MATERIAL PER CUBIC FOOT = $\frac{(4)(6)^{**}}{100^{*}}$	(lbm)	77.3	73.7	74.4		
(14) COMPUTED DRY UNIT WEIGHT OF MINUS NO. 4 (4.75 mm) MATERIAL = $\frac{(13)^{**}}{(12)}$	(lbf/ft^3)	106.0	99.6	100.7		
(15) COMPUTED MOISTURE CONTENT OF MINUS NO. 4 (4.75 mm) MATERIAL = (2) + (9)	(%)	14.0	17.7	10.9		
(16) D VALUE (PERCENT OF MAXIMUM COMPACTED DRY UNIT WEIGHT = $\frac{(14)\ 100^{*}}{(3)}$	(%)	95.4	89.6	90.6		

100* = Constant to convert percent to decimal
** = Implies 1 lbm = 1 lbf
62.43 lbf/ft^3 *** = Unit weight of water at 4° C

REMARKS: _____

GPO 852-236

Figure 5. – Large scale compaction test — data sheet 3 — example.

Record the average absorption of plus No. 4 (4.75 mm) material on line (8) and on line (15d), columns (a) through (d) on data sheet 1, and on line (2) of data sheet 3.

11.2.4 Estimate the desired maximum dry unit weight of total material.

$$\gamma_t = \frac{100}{\frac{P_s}{D\,\gamma_d} + \frac{P_g}{62.43\,G}} \quad (1)$$

where:

γ_t = desired maximum dry unit weight of total material, lbf/ft³
γ_d = maximum dry unit weight of minus No. 4 fraction (see USBR 5500), lbf/ft³
G = average bulk specific gravity, ovendry material, (see USBR 5320)
P_s = percent minus No. 4 in sample (see USBR 5325), %
P_g = percent plus No. 4 in sample (see USBR 5325), %
D = desired percent of maximum dry unit weight of minus No. 4 material, expressed as a decimal (see note 3)
100 = convert from percent to decimal
62.43 = unit weight of water at 4 °C, lbf/ft³

Record the value to 0.1 lbf/ft³ on line (9) on data sheet 1 as *Maximum dry unit weight of total material.*

NOTE 3.–If more precise data are not available, the value of D may be estimated from the curves shown on figure 6 using the following guide:

Enter the graph on the abscissa with a known percentage of gravel and follow that percentage up to its intersection with one of the three curves characteristic of the gravel type. Traverse the graph horizonatally to the left to intersect the ordinate; read a value of D. Record the value to the nearest 0.01 on line (3) on data sheet 1 as *Percent of maximum dry unit weight of minus No. 4 (4.75 mm) material expressed as a decimal.*

11.2.5 Obtain the area of the compaction mold from the calibration data and record it to the nearest 0.001 ft² on line (10) on data sheet 1 as *Area of compaction mold.* Check the box to indicate if a liner is used. Obtain the ring gauge height from the calibration data and record it to the nearest 0.001 inch on line (11) on data sheet 1 as *Ring gauge height.*

11.2.6 Calculate the total dry mass of material required for one test specimen.

$$m_s = \frac{(2)(3)(4)\,1}{12} \quad (2)$$

where:

m_s = total dry mass of material required for one test specimen, lbm
(2) = maximum dry unit weight of total material, lbf/ft³
(3) = area of compaction mold, ft²
(4) = ring gauge height, in
12 = change inch to foot
1 = change pound force to pound mass

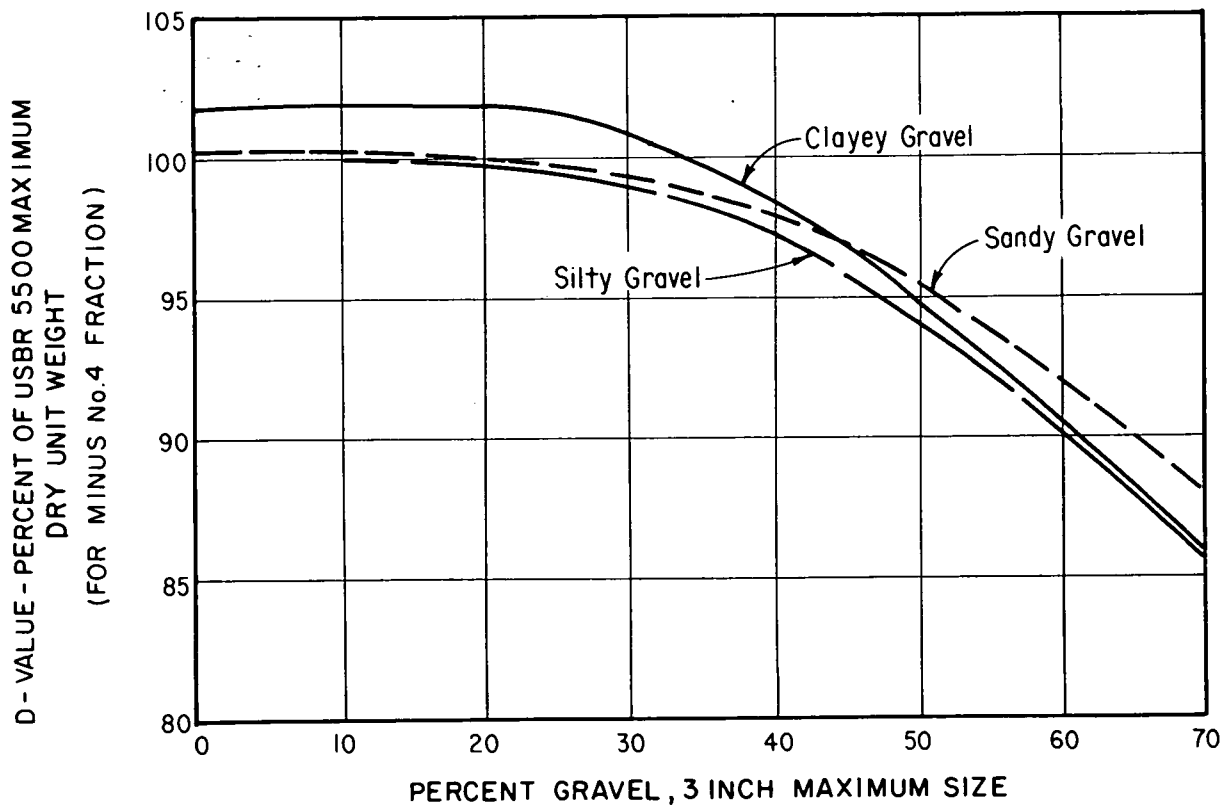

Figure 6. – Percent gravel versus D-value. 101-D-390

Record the value to 0.01 lbm on line (12) on data sheet 1 as *Total dry mass of material required for one specimen.*

11.2.7 Calculate the theoretical moisture content of total material.

$$W_t = \frac{P_s W_{(-4)}}{100} + \frac{P_g W_g}{100} \quad (3)$$

where:

W_t = theoretical moisture content of total material, %
P_s = percent minus No. 4 in sample, %
P_g = percent plus No. 4 in sample, %
$W_{(-4)}$ = desired moisture content of minus No. 4 material, %
W_g = average absorption of plus No. 4, %
100 = Convert from percent to decimal

Record the value to 0.1% on line (13) on data sheet 1 as *Theoretical moisture content of total material.*

11.2.8 Calculate the mass of dry material required for a single lift of a specimen.

$$m_1 = \frac{m_s}{3} \quad (4)$$

where:

m_1 = mass of dry material required for a single lift, lbm
m_s = total dry mass of material required for one test specimen, lbm
3 = number of compaction lifts

Record the value to 0.01 lbm on line (14) on data sheet 1 as *Mass of dry material required for a single lift.*

11.2.9 Prepare the plus No. 4 (4.75 mm) and minus No. 4 (4.75 mm) material for testing using either of the following methods.

11.2.9.1 Bulk sample preparation:

11.2.9.1.1 Place each size of plus No. 4 material from the bulk sample into separate buckets or other suitable containers and soak according to USBR 5320.

11.2.9.1.2 Using the moisture content of the minus No. 4 (4.75 mm) material previously determined in subparagraph 11.2.3.1 or 11.2.3.2, prepare the mass of minus No. 4 material to the initial moisture content desired for compacting the first specimen as outlined in appendix X1. Place the minus No. 4 (4.75 mm) material in a moisture proof container and store in accordance with the following standing times;

Classification USBR 5000 or 5005	*Minimum standing time, hour*
SM	3
ML, CL, OL, SC	18
MH, CH, OH, Pt	36

11.2.9.2 Individual specimen preparation:

11.2.9.2.1 Calculate the total dry mass of each screen size of plus No. 4 and minus No. 4 (4.75-mm) material required to prepare a single specimen.

$$(1) = \frac{1.10(2)\, m_s}{100} \quad (5)$$

where:

(1) = total dry mass of each screen size or mass of minus No. 4 material, lbm
(2) = percent of material retained on each screen size or the percent of minus No. 4 material, %
m_s = total dry mass of material required for one test specimen, lbm
1.10 = constant to add 10-percent additional material to test specimen
100 = convert from percent to decimal

Record the values to 0.01 lbm on line (15b) on data sheet 1 as *Mass required.*

NOTE 4.–Multiplying the mass required on line (15b) by 3 provides the total mass of each material size required to prepare three compaction specimens plus approximately 10-percent excess material.

11.2.9.2.2 Prepare the plus No. 4 material for testing as described in subparagraph 11.2.9.1.1.

11.2.9.2.3 Prepare the minus No. 4 material for testing as described in subparagraph 11.2.9.1.2.

11.2.10 Calculate the dry mass of each screen size of plus No. 4 and the minus No. 4 (4.75 mm) material required for a single lift.

$$(1) = \frac{(2)\, m_1}{100} \quad (6)$$

where:

(1) = dry mass of material of each screen size or mass of minus No. 4 material for one lift, lbm
(2) = percent of material retained on each screen size or the percent of minus No. 4 material, %
m_1 = mass of dry material required for one lift, lbm
100 = convert from percent to decimal

Record the values to the nearest 0.01 lbm on line (15c) on data sheet 1 as *Dry mass required per lift.*

11.2.11 Determine the moisture content of the minus No. 4 material previously prepared in subparagraph 11.2.9. If the moisture content is within ±0.5 percentage point of the desired compaction moisture content, record the value in column (e) on line (15d) and proceed. If the moisture content difference is greater than 0.5 percentage point from the desired moisture content, add or remove moisture from the specimen until it meets this criteria.

11.2.12 Calculate the wet mass of each screen size of the plus No. 4 and the minus No. 4 (4.75 mm) material required for a single lift.

$$(1) = (2)\left[1 + \frac{(3)}{100}\right] \quad (7)$$

where:

(1) = mass of wet material of each screen size or mass of minus No. 4 material for one lift, lbm

(2) = mass of dry material of each screen size or mass of minus No. 4 material for one lift, lbm
(3) = moisture content of each material size, %
100 = convert from percent to decimal

Record the values to the nearest 0.01 lbm in columns (a) through (e) on line (15e) on data sheet 1 as *Wet mass required per lift.*

11.3 *Reprocessed Soil:*

11.3.1 If reprocessing of soil is necessary, soil that has been previously compacted should be mixed with as much "new soil" as is available. The use of reprocessed soil should be avoided when testing plastic clay soils, which tend to form lumps, or when the soil is friable and the particles breakdown during testing.

11.3.2 If reprocessed soil must be used, a note is to be made on the data sheets and compaction curve indicating that reprocessed soil was used.

12. Calibration and Standardization

12.1 Verify that equipment is currently calibrated in accordance with the applicable calibration procedure. If the calibration is not current, perform the calibration before using the equipment for this procedure:

USBR 1000 Standards for Linear Measurement Devices
USBR 1010 Calibrating Unit Weight Measures
USBR 1012 Calibrating Balances or Scales

12.2 *Compaction Mold:*

12.2.1 Determine the average inside area of the compaction mold.

12.2.1.1 This calibration is to be performed upon receipt of the compaction mold, biennially, or before reuse after any event that might have affected the diameter of the mold.

12.2.1.2 The data used to calculate the area of the compaction mold are to be recorded on the calibration form used in USBR 1010 (applicable portion of fig. 7).

12.2.1.3 Using an inside micrometer, determine the inside diameter of the compaction mold. Make three measurements of the diameter; one about 1 inch from the bottom of the mold, one about 4 to 5 inches from the bottom of the mold, and one about 8 inches from the bottom of the mold. These measurements should be spaced equally around the circumference of the mold. Record these values to the nearest 0.001 inch.

12.2.1.4 Calculate the average inside diameter of the mold and record the value to the nearest 0.001 inch.

12.2.1.5 Calculate the average inside area of the mold.

$$A = \frac{0.7854\, d^2}{144} \qquad (8)$$

where:

A = average inside area, ft²
d = average inside diameter, in
0.7854 = $\pi/4$
144 = change in² to ft²

Record the value on line (10) on data sheet 1 to the nearest 0.001 ft².

12.2.2 Determine average height of the ring gauge.

12.2.2.1 The data used to calculate the average height of the ring gauge are to be recorded on the calibration form used in USBR 1010 (applicable portion).

12.2.2.2 Using a caliper or outside micrometer, determine the height of the ring gauge. Make three measurements of the height equally spaced around the perimeter of the ring gauge. Record the values to the nearest 0.001 inch.

12.2.2.3 Calculate the average ring gauge height and record the value to the nearest 0.001 inch on line (11) on data sheet 1.

NOTE 5.–The compaction mold may or may not be lined with a closed cell rubber liner. The measurement shall be made to surface of the liner if a liner is present.

13. Conditioning

13.1 Place the minus No. 4 (4.75-mm) material for each specimen as prepared in accordance with subparagraph 11.2.9 in a moisture proof container, and store in accordance with the minimum standing times outlined in subparagraph 11.2.9.1.2.

13.2 Place the plus No. 4 (4.75mm) material for each specimen in water and wet in accordance with USBR 5320.

14. Procedure

14.1 All data are to be recorded on the "Large Scale Compaction Test" data sheets 2 and 3 (figs. 5 and 8).

14.2 Place the bottom porous disk in the compaction mold, and wipe the disk with a very wet towel to prevent significant migration of moisture from the specimen to the disk.

14.3 Determine the combined mass of the compaction mold and porous disk. Record the value on line (9) on data sheet 2 as *Mass of compaction mold.*

14.4 Place the 9-inch-high ring gauge inside the compaction mold, in the center of the porous disk.

14.5 Place the top porous disk and loading plate on top of the ring gauge. Align the handles of the loading plate over the shoulders of the compaction mold.

14.6 Place the dial indicators between the handles of the loading plate and the shoulders on the compaction mold (fig. 9).

14.7 Read the dial indicators and record the readings as A (for the indicator on the left, when facing the mold) and B (indicator on the right) to 0.001 inch on line (2) of data sheet 2 as *Initial dial reading.* Remove the loading plate, the top porous disk, and the ring gauge.

14.8 Position the compaction mold under the hammer of the large mechanical compactor using the hoist apparatus and yoke.

14.9 From the materials stored in subparagraph 11.2.9 obtain the quantities of materials calculated in subparagraph 11.2.12. In a mixing pan, mix these materials together thoroughly.

14.10 Shovel the mixed material obtained in subparagraph 14.9 into the compaction mold, and spread it evenly over the bottom.

7-1708 (9-86)
Bureau of Reclamation

UNIT WEIGHT MEASURE CALIBRATION

Designation USBR 1010-89

MEASURE NO.	NOMINAL VOLUME	DIAL INDICATOR NO.
A6 Large compaction mold	3.0 ☒ ft³ ☐ cm³	

CALIBRATION PERFORMED BY	DATE	COMPUTED BY	DATE	CHECKED BY	DATE

DETERMINATION OF MEASURE VOLUME USING MICROMETER

			TRIAL NO.	
Inside diameter of measure			1	19.610
			2	19.540
			3	19.440
(1) Average inside diameter	☒ in	☐ mm		19.530
~~Inside height of measure~~ Ring gauge height			1	9.000
			2	9.000
			3	9.000
(2) Average ~~inside height~~ ring gauge height	☒ in	☐ mm		9.000
(3) Volume of measure = $\frac{\pi (1)^2 (2)}{4C^*}$	☐ ft³	☐ cm³		

DETERMINATION OF MEASURE VOLUME BY WATER FILLING METHOD

(4) Mass of measure + glass plate + water	☐ lbm	☐ g	
(5) Mass of measure + glass plate	☐ lbm	☐ g	
(6) Mass of water (4) - (5)	☐ lbm	☐ g	
(7) Temperature of water °C			
**(8) Absolute density of water	☐ lbm/ft³	☐ g/cm³	
(9) Volume of measure = $\frac{(6)}{(8)}$	☐ ft³	☐ cm³	
(10) Volume per unit height = $\frac{(9)}{(2)}$	☐ ft³/in	☐ cm³/mm	

DETERMINATION OF REFERENCE DIAL READING CONSTANT

Dial indicator readings, left side			1	
			2	
			3	
right side			1	
			2	
			3	
(11) Average dial indicator reading	☐ in	☐ mm		
(12) Calibration bar thickness	☐ in	☐ mm		

Surcharge base plate thickness			1	
			2	
			3	
			4	
(13) Average base plate thickness	☐ in	☐ mm		
(14) Specimen height at zero dial = (2) - [(11) - (12) + (13)]	☐ in	☐ mm		

(15) Reference bracket reading	☐ in	☐ mm	

*For inch pound application, C = 1,728 and converts in^3 to ft^3
For SI metric applications, C = 1,000 and converts mm^3 to cm^3
**Absolute density value obtained from Table 1, USBR 1010

Figure 7. – Compaction mold calibration — example.

7-2375 (10-86) Bureau of Reclamation	LARGE SCALE COMPACTION TEST-DATA SHEET 2	Designation USBR 5515-89
SAMPLE NO. 38A-18	PROJECT Example	FEATURE Example
TESTED BY DATE	COMPUTED BY DATE	CHECKED BY DATE
(1) COMPACTION MOLD NO. A6		

VOLUME DETERMINATION							
		DIAL READINGS					
SPECIMEN NO.		A	B	A	B	A	B
(2) INITIAL DIAL READING	(in)	0.400	0.250	0.500	0.330	0.450	0.600
(3) FINAL DIAL READING	(in)	0.340	0.310	0.350	0.300	0.540	0.630
(4) DIFFERENCE IN DIAL READINGS = (2) - (3)	(in)	0.060	-0.060	0.150	0.030	-0.090	-0.030
(5) AVERAGE DIFFERENCE IN DIAL READINGS = $\frac{(4)A + (4)B}{2}$	(in)	0.000		0.090		-0.060	
(6) COMPACTED SPECIMEN HEIGHT = 9.000 + (5)	(in)	9.000		9.090		8.940	
(7) TOTAL SPECIMEN VOLUME = (10)1/(6)(.0833*)	(ft^3)	1.559		1.575		1.549	

WET UNIT WEIGHT DETERMINATION				
(8) MASS OF COMPACTION MOLD AND WET SOIL	(lbm)	507.04	503.94	494.58
(9) MASS OF COMPACTION MOLD	(lbm)	302.50	302.50	302.50
(10) MASS OF WET COMPACTED SPECIMEN = (8) - (9)	(lbm)	204.54	201.44	192.08
(11) WET UNIT WEIGHT = $\frac{(10)^{**}}{(7)}$	(lbf/ft^3)	131.2	127.9	124.0

MOISTURE CONTENT AND DRY UNIT WEIGHT DETERMINATION										
MATERIAL		TOTAL		-4	TOTAL		-4	TOTAL		-4
CONTAINER NO.		L-6	L-8	A-4	L-20	L-3	A-8	L-8	L-12	A-6
(12) MASS OF CONTAINER AND WET SOIL	(lbm)	133.68	113.24	8.86	109.37	133.72	3.85	126.00	108.19	2.56
(13) MASS OF CONTAINER AND DRY SOIL	(lbm)	123.85	105.16	7.96	99.87	121.64	3.42	118.58	102.04	2.45
(14) MASS OF CONTAINER	(lbm)	21.42	20.96	1.45	20.65	21.00	1.00	20.96	21.15	1.03
(15) MASS OF WATER = (12) - (13)	(lbm)	9.83	8.08	0.90	9.50	12.08	0.43	7.42	6.15	0.11
(16) MASS OF DRY SOIL = (13) - (14)	(lbm)	102.43	84.20	6.51	79.22	100.64	2.42	97.62	80.89	1.42
(17) MOISTURE CONTENT = $\frac{(15)}{(16)\ 0.01}$ ***	(%)	9.6		13.8	12.0		17.8	7.6		7.7
(18) DRY UNIT WEIGHT = $\frac{(11)}{1 + (17)\ 0.01}$ ***	(lbf/ft^3)	119.7		—	114.2		—	115.2		—

0.0833* = Constant to convert in to ft
** = Implies 1 lbm = 1 lbf
0.01 *** = Constant to convert decimal to percent, convert percent to decimal

1/From Data Sheet 1

GPO 852-311

Figure 8. - Large scale compaction test — data sheet 2 — example.

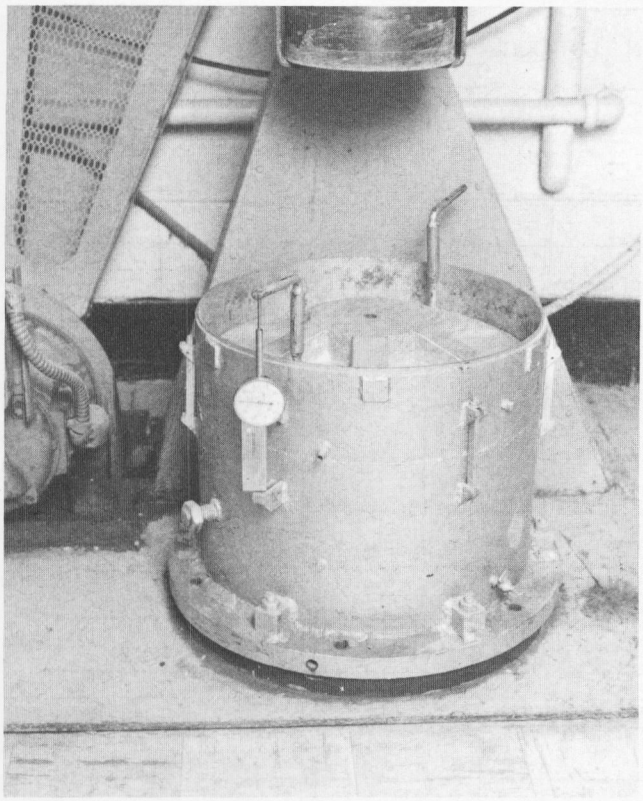

Figure 9. – Initial dial gauge measurement.

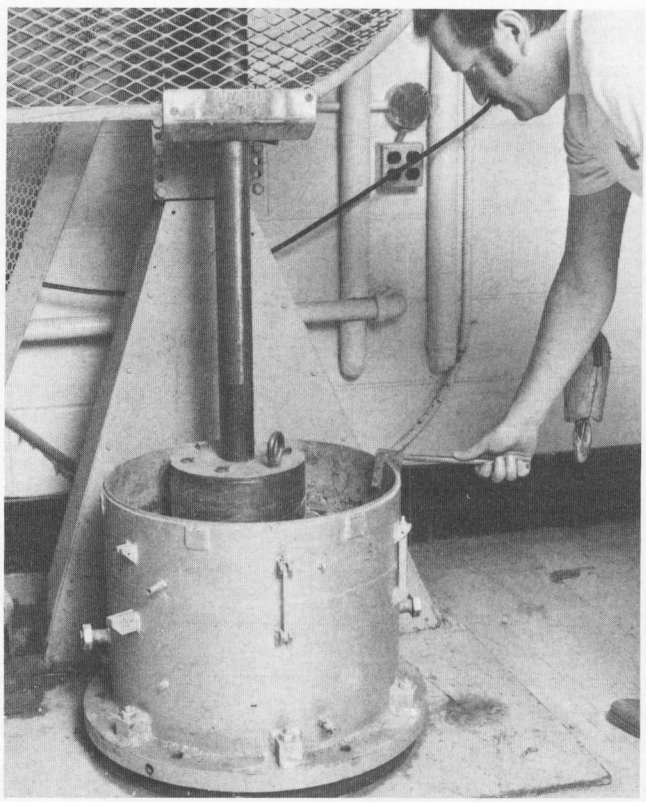

Figure 10. – Rotation of compaction mold using modified spanner wrench.

14.11 Distribute any large pieces of gravel evenly throughout the layer.

14.12 Lower the large mechanical compactor hammer onto the soil.

14.13 Set the collar on the stem of the hammer to obtain an 18-inch drop as follows.

14.13.1 *First Lift*:

14.13.1.1 Place the collar clamp and collar base on the fourth groove from the bottom on the stem of the hammer.

14.13.1.2 Screw the collar lock onto the collar clamp and collar base.

14.13.2 *Second, Third, and Fourth* (if used) *Lifts*:–

14.13.2.1 Loosen the collar lock with the spanner wrench and unscrew the collar lock.

14.13.2.2 Slide the collar base and collar clamp down one groove on the stem of the hammer until the collar clamp slips into the groove on the stem of the hammer.

14.13.2.3 Screw the collar lock onto the collar clamp and collar base.

14.14 Secure the collar lock by tightening with the spanner wrench.

14.15 Start the mechanical compactor with the electric switch.

14.16 Using the modified spanner wrench, rotate the mold approximately one-sixth of a turn after each blow (fig. 10).

14.17 If uncompacted soil appears around the perimeter of the mold, shut off the compactor and scrape the uncompacted soil toward the center of the specimen where it will be compacted by the hammer.

NOTE 6.–If large amounts of material stick to the hammer, the mechanical compactor should be stopped and the hammer cleaned with a spatula or scraper.

14.18 Continue the compaction process until a total of 22 blows have been delivered to the layer.

14.19 Stop the mechanical compactor with the electric switch after 22 blows have been delivered to the layer.

14.20 Hoist the hammer out of the compaction mold, and secure the hammer to the compactor with the hammer support bracket.

14.21 Place and compact the second and third lifts by repeating subparagraphs 14.9 through 14.20.

14.22 Place the compaction mold with compacted soil specimen on a scale using the hoist apparatus and yoke.

14.23 Determine the mass of the compaction mold plus the bottom porous disk and wet soil. Record the value to 0.01 lbm on line (8) on data sheet 2 as *Mass of compaction mold and wet soil.*

14.24 Obtain a portion of the minus No. 4 (4.75-mm) fraction not used in the compaction test for a moisture content determination. The moisture content determination should be performed in accordance with USBR 5300. The data obtained are to be recorded to 0.1 percent on

lines (12) through (17) in the column noted as "-4" on data sheet 2 (fig. 8).

14.25 Use the hoist apparatus and yoke to move the compaction mold from the scale to the floor or vice versa.

14.26 Use the small tamping hammer and a spatula to level the surface of the specimen. The surface of the specimen must be leveled before the total height of specimen can be measured. It is important to use only a light tapping action with the hammer because significant compactive energy must not be added to the specimen during the leveling process.

14.27 Place the top porous disk and loading plate on top of the specimen in the same position it occupied when placed on the 9.000-inch ring gauge.

14.28 Strike the loading plate with three light blows using the large tamping hammer to ensure proper seating.

14.29 Leave the hammer on the loading plate while the dial readings are taken.

14.30 Place the dial indicator into position.

14.31 Obtain and record the final dial readings. Record the values to the nearest 0.001 inch on data sheet 2 on line (3) as *Final dial reading* in columns marked A and B.

14.32 Using the hoist apparatus, yoke, T-bar, and straight rod, lift and invert the compaction mold over a mixing pan.

14.33 Lower the compaction mold into the mixing pan.

14.34 Remove the specimen by striking the mold with a rubber mallet. If the specimen cannot be removed this way, an air-pressure line should be attached to the bottom of the mold and air pressure used to extrude the specimen.

14.35 Break the specimen into small pieces using the T-bar and the digging bar.

14.36 Use the entire specimen for the moisture content determination. Two mixing pans will be required to hold the specimen. The moisture content determination should be performed in accordance with USBR 5300. Record the values on data sheet 2 on lines (12) through (17) in the *Total* column (fig. 8). Record the value of moisture content to 0.1 percent.

14.37 Calculate the wet and dry unit weights for the compacted specimen and record on lines (11) and (18) respectively.

14.38 Repeat the procedure outlined in subparagraphs 14.1 through 14.37 until at least three specimens have been compacted.

NOTE 7: If a permeability test is to be performed on the compacted specimen, a compaction mold lined with closed cell rubber sheeting must be used, and the first and second layers must be scarified before placing the next layer. If the specimen is expected to have a permeability higher than that of the porous disks, use a layer of sand or gravel on the top and bottom of the specimen instead of the porous disks.

14.39 Plot the moisture contents and corresponding dry unit weights as shown on figure 11.

14.40 If the plotted points do not fall on both sides of the optimum moisture content (e.g., there is no apparent peak to the curve) additional specimens must be prepared and compacted at appropriate moisture contents.

14.41 If additional material is not available, see subparagraph 11.3.

14.42 Calculate the apparent specific gravity of the total specimen as shown in subparagraph 15.9.

14.43 Plot the zero air voids curve as shown on figure 11 and outlined in USBR 5500 (app. X1).

15. Calculations

15.1 Calculate the difference in height of the compacted specimen from the ring gauge height. Use dial indicator readings A and B obtained in subparagraphs 14.7 and 14.31.

$$\text{Diff} = \text{Dial}_i - \text{Dial}_f \qquad (9)$$

where:

Diff = difference in dial readings, in
Dial_i = initial dial reading from line (2) data sheet 2, fig. 8, in
Dial_f = final dial reading from line (3) data sheet 2, fig. 8, in

Record the value to 0.001 in on line (4) on data sheet 2 as *Difference in dial readings.*

15.2 Calculate the average difference in dial readings.

$$\text{Diff}_a = \frac{\text{Diff}(A) + \text{Diff}(B)}{2} \qquad (10)$$

where:

Diff_a = average difference in dial reading, in
Diff(A) = difference in dial reading A, in
Diff(B) = difference in dial reading B, in

Record the value to 0.001 in on line (5) on data sheet 2 as *Average difference in dial readings.*

15.3 Calculate the final compacted specimen height.

$$\text{Height} = 9.000 + \text{Diff}_a \qquad (11)$$

where:

Height = final compacted specimen height, in
9.000 = constant, ring gauge height (subpar. 8.2.7), in
Diff_a = average difference in dial readings, in

NOTE 8.- Maintain the sign convention of positive (+) or negative (-) for the value of Diff_a. Diff(A) and Diff(B) are algebraically correct and carry the correct sign convention, as does Diff_a.

Record the value to 0.001 on line (6) on data sheet 2 as *Compacted specimen height.*

15.4 Determine the volume of compacted specimen.

$$\text{Vol} = 0.0833\ (\text{Height})\ (\text{Area}_c) \qquad (12)$$

where:

Vol = volume of compacted specimen, ft^3
Height = compacted specimen height, in
Area_c = cross-sectional area of compaction mold, ft^2
0.0833 = change inch to foot, ft/in

7-1414 (9-85)
Bureau of Reclamation

COMPACTION - PENETRATION RESISTANCE CURVES

Designation USBR 5515-89

SAMPLE NO.	FEATURE	PROJECT
38A-18	Example	Example

Hole No. Test Pit No. 3 Plotted by _____ Date _____

Depth 0-5 ft ☒ m ☐ Checked by _____ Date _____

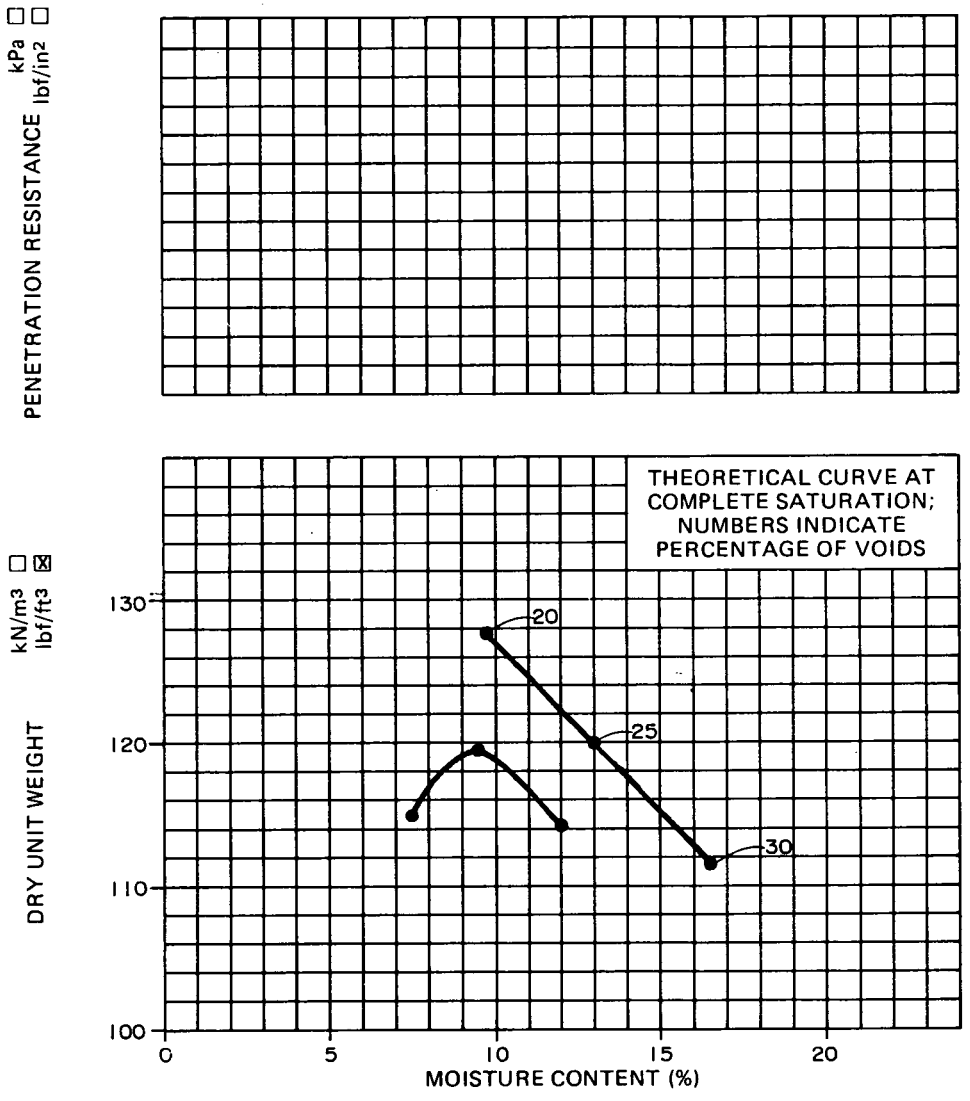

CLASSIFICATION _____

Gravel _____ %
Sand _____ %
Fines _____ %

ATTERBERG LIMITS

Liquid Limit _____ %
Plasticity Index _____ %
Shrinkage Limit _____ %

SPECIFIC GRAVITY

Minus No. 4 2.60
Plus No. 4 --
Bulk 2.50
Apparent 2.56
Absorption 1.6 %

Remarks _____

COMPACTION

Method USBR 5515
Percent larger than tested 0
Maximum dry unit weight 119.7 ☐ kN/m³ ☒ lbf/ft³
Optimum moisture content 9.6 %
Degree of saturation @ opt --- %
Penetration resistance @ opt NA ☐ kPa ☐ lbf/in²

GPO 848-759

Figure 11. – Compaction-penetration resistance curves — example.

Record the value to 0.001 ft³ on line (7) on data sheet 2 as *Total specimen volume.*

15.5 Calculate the mass of wet compacted specimen.

$$m_w = m_{ms} - m_m \quad (13)$$

where:
m_w = mass of wet compacted specimen, lbm
m_{ms} = mass of compaction mold and wet soil, lbm
m_m = mass of compaction mold, lbm

Record the value to 0.01 lbm on line (10) on data sheet 2 as *Mass of wet compacted specimen.*

15.6 Calculate the wet density of compacted specimen.

$$\rho_{wet} = \frac{m_w}{\text{Vol}} \quad (14)$$

where:
ρ_{wet} = wet density of compacted specimen, lbm/ft³
m_w = mass of wet compacted specimen, lbm
Vol = volume of compacted specimen, ft³

15.6.1 Convert wet density to wet unit weight by changing lbm/ft³ to lbf/ft³ (assume 1 lbf=1 lbm) and record to the nearest 0.1 lbf/ft³ on line (11) on data sheet 2 as *Wet unit weight.*

15.7 Calculate the dry unit weight of compacted specimen.

$$\gamma_{dc} = \frac{\gamma_{wet}}{1 + \frac{w}{100}} \quad (15)$$

where:
γ_{dc} = dry unit weight of compacted specimen, lbf/ft³
γ_{wet} = wet unit weight of compacted specimen, lbf/ft³
w = moisture content of total specimen, %
100 = convert from percent to decimal

Record the value to 0.1 lbf/ft³ on line (18) on data sheet 2 as *Dry unit weight.*

15.8 Calculate the dry unit weight and moisture content of the minus No. 4 (4.75-mm) material as follows.

15.8.1 Record the values of moisture content and dry unit weight of the total specimen from lines (17) and (18) data sheet 2 onto lines (7) and (6) respectively, on data sheet 3 as *Dry unit weight of compaction specimen* and *Moisture content of compaction specimen (Total).*

15.8.2 Calculate the moisture content of minus No. 4 material.

$$w_a = w_t - w_g \quad (16)$$

where:
w_a = moisture content of minus No. 4 material, %
w_t = moisture content of compaction specimen, total, %
w_g = average absorption of plus No. 4 material, %

Record the value to 0.1 percent on line (8) on data sheet 3 as *Moisture content of minus No. 4 (4.75 mm) material.*

15.8.3 Calculate the corrected moisture content of minus No. 4 material.

$$w_c = 100 \left(\frac{w_a}{P_s} \right) \quad (17)$$

where:
w_c = corrected moisture content of minus No. 4 material, %
P_s = percent passes No. 4 screen, %
100 = convert from decimal to percent

Record the value to 0.1 percent on line (9) on data sheet 3 as *Corrected moisture content of minus No. 4 (4.75 mm) material.*

15.8.4 Calculate the dry mass of plus No. 4 per cubic foot of total material.

$$m_g = \frac{P_g \gamma_{dc}}{100} 1 \quad (18)$$

where:
m_g = dry mass of plus No. 4 per cubic foot of total material, lbm/ft³
P_g = percent retained on No. 4 screen, %
γ_{dc} = dry unit weight of compacted specimen, lbf/ft³
100 = convert from percent to decimal
1 = change pound force to pound mass

Record the value to 0.01 lbm on line (10) on data sheet 3 as *Dry mass of plus No. 4 (4.75 mm) per cubic foot of total material.*

15.8.5 Calculate the volume of plus No. 4 (4.75 mm) material per cubic foot of total material.

$$V_g = \frac{m_g}{62.43\ G_g} \quad (19)$$

where:
V_g = volume of plus No. 4 (4.75 mm) material per cubic foot of total material, ft³/ft³
m_g = dry mass of gravel per cubic foot of total material, lbm/ft³
62.43 = density of water at 4 °C, lbm/ft³
G_g = specific gravity of gravel

Record the value to 0.001 ft³ on line (11) on data sheet 3 as *Volume of plus No. 4 per cubic foot of total material.*

15.8.6 Calculate the dry mass of minus No. 4 material per cubic foot of total material.

$$m_{(-4)} = \frac{P_g \gamma_{dc}}{100} \times 1 \quad (20)$$

where:
$m_{(-4)}$ = dry mass of minus No. 4 material per cubic foot of total material, lbm/ft³
P_s = percent passing No. 4 screen, %
γ_{dc} = dry unit weight of compacted specimen, lbf/ft³
100 = convert from percent to decimal
1 = change pound force to pound mass

Record the value to 0.1 lbm on line (13) on data sheet 3 as *Dry mass of minus No. 4 (4.75 mm) material per cubic foot material.*

15.8.7 Calculate the volume of minus No. 4 per cubic foot of total material.

$$V_{(-4)} = 1 - V_g \quad (21)$$

where:

$V_{(-4)}$ = volume of minus No. 4 per cubic foot of total material, ft^3/ft^3
V_g = volume of gravel per cubic foot of total material, ft^3/ft^3
1 = unit volume, ft^3/ft^3

Record the value to 0.001 ft^3 on line (12) of data sheet 3 as *Volume of minus No. 4 (4.75 mm) per cubic foot of total material.*

15.8.8 Calculate the computed dry density of minus No. 4 fraction.

$$\rho_d\,(c) = \frac{M_{(-4)}}{V_{(-4)}} \quad (22)$$

where:

ρ_d (c) = computed dry density of minus No. 4 fraction, lbm/ft^3
$M_{(-4)}$ = dry mass of minus No. 4 material per cubic foot of total material, lbm/ft^3
$V_{(-4)}$ = volume of minus No. 4 per cubic foot of total material, ft^3/ft^3

15.8.8.1 Convert dry density to dry unit weight by changing lbm/ft^3 to lbf/ft^3 (assume that 1 lbm = 1 lbf) and record to the nearest 0.1 lbf/ft^3 on line (14) on data sheet 3 as *Computed dry unit weight of minus No. 4 (4.75 mm) material.*

15.8.9 Calculate the computed moisture content of minus No. 4 fraction.

$$w_{(-4)}(c) = w_g + w_c \quad (23)$$

where:

$w_{(-4)}$ (c) = computed moisture content of minus No. 4 fraction, %
w_g = average absorption of plus No. 4 material, %
w_c = corrected moisture content of minus No. 4 material, %

Record the value to 0.1 percent on line (15) on data sheet 3 as *Computed moisture content of minus No. 4 (4.75 mm) material.*

15.8.10 Calculate the D-value (percent of maximum compacted dry unit weight).

$$D = 100\left[\frac{\gamma_d(c)}{\gamma_d}\right] \quad (24)$$

where:

D = percent of maximum compacted dry unit weight, %
$\gamma_d(c)$ = computed dry unit weight of minus No. 4 material, lbf/ft^3
γ_d = maximum dry unit weight of minus No. 4 fraction, lbf/ft^3
100 = convert from decimal to percent, %

Record the value on line (16) on data sheet 3 as *D value (percent of maximum compacted dry unit weight).*

15.9 Theoretical curve at complete saturation (zero air voids curve).–

15.9.1 Values of dry unit weight and corresponding moisture content for plotting the zero air voids curve are computed.

$$\gamma t = 62.43\,G_a\left(1 - \frac{n}{100}\right) \quad (25)$$

and

$$w = 62.43\,\frac{n}{\gamma_t} \quad (26)$$

where:

γ_t = dry unit weight of total material, lbf/ft^3
62.43 = unit weight of water at 4 °C, lbf/ft^3
n = porosity, %
w = moisture content of total material, %
G_a = apparent specific gravity of total material

NOTE 9.–Values of γ_t and w are determined by inputing selected increments of n into the equations given in subpar. 15.9.1, and the value of the apparent specific gravity of the total material is calculated as follows.

$$G_a = \frac{100}{\frac{P_s}{G_s} + \frac{P_g}{G_g}} \quad (27)$$

where:

G_a = apparent specific gravity of total material
G_s = specific gravity of minus No. 4 fraction
G_g = apparent specific gravity of plus No. 4 fraction
P_s = percent passing No. 4 screen, %
P_g = percent retained on No. 4 screen, %
100 = convert from percent to decimal

NOTE 10.–In USBR 5500, appendix X1 has been prepared to provide values of dry unit weight and moisture content at complete saturation for specific gravities between 2.45 and 2.90 and percent voids between 10 and 60 percent. Materials compacted by the usual field and laboratory compaction methods contain entrapped air; therefore, the field roller unit weight curves and laboratory test curves may approach but never cross the zero air voids curve.

16. Report

16.1 The report is to consist of the following completed and checked forms:

"Large Scale Compaction Test"—data sheet 1 (fig. 4).
"Large Scale Compaction Test"—data sheet 2 (fig. 8).
"Large Scale Compaction Test"—data sheet 3 (fig. 5).
"Compaction–Penetration Resistance Curves" (fig. 11).

16.2 All calculations are to show a checkmark and all plotting must be checked.

17. Background References

"Moisture-Density Relationship of Soils," Geotechnical Branch Training Manual No. 1, Bureau of Reclamation, Denver, Colorado.

"Earthwork Construction Control," Geotechnical Branch Training Manual No. 2, Bureau of Reclamation, Denver, Colorado.

"Research on Compaction Control Testing for Gravelly Soils", Earth Research Program. Soils Engineering Report No. EM-662, Bureau of Reclamation, Denver, Colorado, August 1963.

"Compaction Characteristics of Gravelly Soils," Earth Laboratory Report EM-509, Bureau of Reclamation, Denver, Colorado, September 1957.

"Compaction Characteristics of Earth-Rock Mixtures; Vicksburg Silty Clay and DeGray Dam Clayey Sandy Gravel," Miscellaneous Paper S-73-25, Report 1, U.S. Army Engineer Waterways Experiment Station, Corps of Engineers, Vicksburg, Mississippi, May 1973.

Donaghe, R. T., and F. C. Townsend, "Compaction Characteristics of Earth-Rock Mixtures; Report 2, Blended Material," Miscellaneous paper S-73-25, Report 2, U.S. Army Engineer Waterways Experiment Station, Corps of Engineers, Vicksburg, Mississippi, August 1975.

APPENDIX

X1. ADDED WATER DETERMINATION FOR COMPACTED SOIL SPECIMENS

X1.1 Scope

X1.1.1 This appendix outlines the procedure for determining the mass of water to add to or remove from a soil in order to prepare the soil to a specific moisture content.

X1.2 Procedure

X1.2.1 All data are to be recorded on the "Added Water Determination" form as shown on figure X1.1.

X1.2.2 The natural or air-dried moisture content of the soil specimens is to be determined in accordance with USBR 5300. Record the moisture content value in column (1) on the form as *Moisture content (%), Initial.*

X1.2.3 The desired moisture content for each specimen is determined. Record the value in column (2) on the form as the *Moisture content (%), Desired.*

X1.2.4 Calculate the moisture content difference for each test specimen.

$$(3) = (2) - (1) + 0.3 \qquad \text{(X1)}$$

where:
(3) = moisture content difference, %
2) = desired moisture content, %
(1) = initial moisture content, %
0.3 = moisture content added for handling and evaporation loss, % (optional)

Record the value for each test specimen in column (3) of the form as *Moisture content (%), Difference.*

X1.2.5 Determine the mass of the container and record the value in column (5) of the form as *Mass g, container.*

X1.2.6 Determine the mass of the soil and container. Record the value in column (4) of the form as *Mass g, specimen and container.*

X1.2.7 Calculate the mass of specimen.

$$(6) = (4) - (5) \qquad \text{(X2)}$$

where:
(6) = mass of specimen, g
(4) = mass of specimen and container, g
(5) = mass of container, g

Record the value in column (6) of the form as *Mass g, Specimen.*

NOTE X1.1.–If a container is not needed, subparagraphs X1.2.5 through X1.2.7 may be omitted and the mass of the specimen recorded directly.

X1.2.8 Calculate the dry mass of specimen.

$$(7) = \frac{(6)}{1 + \frac{(1)}{100}} \qquad \text{(X3)}$$

where:
(7) = dry mass of specimen, g.
100 = convert from percent o decimal

Record the value in column (7) of the form as *Mass g, Dry mass of specimen.*

X1.2.9 Calculate the mass of water to add to each soil specimen.

$$(8) = (7)\frac{(3)}{100} \qquad \text{(X4)}$$

where:
(8) = mass of water to add, g
100 = convert from percent to decimal

Record the value in column (8) of the form as *Mass g, Water to add.*

NOTE X1.2.–The water may be measured by volume, rather than mass. For the purpose of this procedure, assume one gram equal to one milliliter equal to one cubic centimeter.

7-2327 (10-85) Bureau of Reclamation	ADDED WATER DETERMINATION		Designation USBR - 5515-. 89
SAMPLE NO. 38A-18	PROJECT Example		FEATURE Example
COMPUTED BY	DATE	CHECKED BY	DATE

Specimen No.	Moisture Content %			Mass g lbm				
	Initial (1)	Desired (2)	Difference (3)	Specimen and Container (4)	Container (5)	Specimen (6)	Dry Mass of Specimen (7)	Water to Add (8)
1	6.8	16.4	9.6	189.28	44.65	144.63	135.42	13.00
			(2) – (1)			(4) – (5)	$100\left[\frac{(6)}{100+(1)}\right]$	$(7)\left[\frac{(3)}{100}\right]$

Remarks: For large scale compaction test

Auxiliary Tests:

USBR 5300 - 89

GPO 848-762

Figure X1.1 - Added water determination — example.

UNITED STATES DEPARTMENT OF THE INTERIOR
BUREAU OF RECLAMATION

USBR 5525-89

PROCEDURE FOR

DETERMINING THE MINIMUM INDEX UNIT WEIGHT OF COHESIONLESS SOILS

INTRODUCTION

This procedure is under the jurisdiction of the Geotechnical Services Branch, code D-3760, Research and Laboratory Services Division, Denver Office, Denver, Colorado. The procedure is issued under the fixed designation USBR 5525. The number immediately following the designation indicates the year of acceptance or the year of last revision.

1. Scope

1.1 This designation outlines the procedure for determining the minimum index unit weight of cohesionless free-draining soils using a pouring device (method A) or a hand scoop (method B) for placing the soil into a unit weight measure.

1.2 This procedure is normally performed for soils containing less than 5-percent fines. It may be used, under certain circumstances, for soils containing 5 to 15 percent fines. This procedure is limited to soils having a maximum particle size of 3 inches.

1.3 Method A is applicable for determining the minimum index unit weight of soils for which a pouring device is used. Method B is applicable for determining the minimum index unit weight of soils for which a hand scoop is used. Table 1 provides specimen mass and placement device requirements based on maximum particle size in the material being tested.

NOTE 1.–There may be special cases when evaluation of applicability of percent relative density may be necessary for some cohesionless silts or sandy silts even though they may not be considered free-draining materials.

2. Auxiliary Tests

2.1 A test sample must be obtained in accordance with USBR 5205 prior to performing this procedure. USBR 5530 and 7250 must be performed in order to determine the percent relative density of the soil specimen.

3. Applicable Documents

3.1 *USBR Procedures*:
USBR 1010 Calibrating Unit Weight Measures
USBR 1012 Calibrating Balances or Scales
USBR 1020 Calibrating Ovens
USBR 3900 Standard Definitions of Terms and Symbols Relating to Soil Mechanics
USBR 5205 Preparing Soil Samples by Splitting or Quartering
USBR 5300 Determining Moisture Content of Soil and Rock by the Oven Method
USBR 5500 Performing Laboratory Compaction of Soils — 5.5-lbm Rammer and 18-in Drop
USBR 5510 Performing Laboratory Compaction of Soils — Harvard Miniature
USBR 5515 Performing Laboratory Compaction of Soils Containing Gravel
USBR 5530 Determining the Maximum Index Unit Weight of Cohesionless Soils
USBR 7250 Determination of Percent Relative Density

4. Summary of Method

4.1 An ovendried soil specimen is loosely deposited in a calibrated unit weight measure using a scoop or pouring device. Excess material is carefully removed, the mass of the measure and material is determined, and the minimum index unit weight of the soil is calculated.

5. Significance and Use

5.1 The minimum index unit weight is the dry unit weight of a soil placed at the loosest state of compactness using a standard laboratory procedure which prevents bulking and minimizes particle segregation. An absolute minimum unit weight is not necessarily obtained using this procedure.

5.2 To determine the percent relative density of a cohesionless free-draining soil at any given unit weight, the unit weight of the soil in its loosest and densest states must be obtained using standard laboratory procedures. USBR 5530 must be performed to determine the unit weight of the soil in its densest state. USBR 7250 is performed to determine the percent relative density.

5.3 Construction placement control of cohesionless soil is often based on percent relative density of that soil.

5.4 The compaction characteristics of soils vary depending on the gradation of the soil and the cohesiveness

of any fines. Generally, the laboratory compaction test is most applicable for soils containing more than 15-percent fines. For construction control of these soils, percent compaction is used to determine the adequacy of compaction. For soils containing less than 5-percent fines, the minimum and maximum index unit weight tests are used to evaluate the compaction characteristics. For construction control of these soils, percent relative density is used to determine the adequacy of compaction.

Soils containing 5 to 15 percent fines may need to be tested using both the laboratory compaction test and the combination of the minimum–maximum index unit weight tests to see which is most appropriate. Whether percent compaction or percent relative density is used, for construction control, depends on the test results and how the soil is being used. See USBR 7250 or 7255 (app. X1) for further discussion.

6. Terminology

6.1 Definitions are in accordance with USBR 3900. A term of particular significance is:

6.1.1 *Relative Density* (D_d).–The ratio of: (1) the difference between the void ratio of a cohesionless soil in the loosest state and any given void ratio, to (2) the difference between its void ratios in the loosest state and densest state (ASTM definition).

NOTE 2.–The term "relative density" is used even though it is calculated using dry unit weights. This is because of broad usage of the term and to prevent confusion by using a new term. Technically, if densities rather than dry unit weights were used to calculate the term, the value of percent relative density would be identical.

6.2 Terms not included in USBR 3900 specific to this designation are:

6.2.1 *Maximum Index Unit Weight*, γ_{dmax}.–The reference dry unit weight of a soil in the densest state of compactness that can be attained using a standard laboratory compaction procedure that minimizes particle segregation and breakdown (USBR 5530).

6.2.2 *Minimum Index Unit Weight*, γ_{dmin}.–The reference dry unit weight of a soil placed at the loosest state of compactness using a standard laboratory procedure which prevents bulking and minimizes particle segregation (USBR 5525).

7. Apparatus

7.1 *General Apparatus*:

7.1.1 *Balance or Scale.*–Typical balances or scales used for this designation are:

Application	*Readable to*	*Approximate capacity*
Method A	0.01 lbm	50 lbm
Method B	0.01 lbm	150 lbm

7.1.2 *Brush.*–Hair-bristled dusting brush.

7.1.3 *Drying Oven.*–An oven, thermostatically controlled, preferably of the forced-draft type, and capable of maintaining a uniform temperature of 230±9 °F (110±5 °C) throughout the drying chamber.

7.1.4 *Hand Scoops.*–Flat bottom hand scoops with handle; small scoop, approximate bowl dimensions, 3-1/2 by 6 inches; large scoop, approximate bowl dimensions, 5-1/4 by 7-1/2 inches.

7.1.5 Metal Straightedge.–Metal straightedge, about 15 inches (35 cm) long.

7.1.6 *Mixing Pans.*–Large metal mixing pans, about 36 by 24 by 4 inches (90 by 60 by 10 cm); or medium metal mixing pans, about 16 by 16 by 2 inches (40 by 40 by 5 cm).

7.2 *Equipment Unique to This Procedure*:

7.2.1 *Unit Weight Measures*:

7.2.1.1 *Standard Unit Weight Measures.*–Cylindrical metal measures having nominal volumes of 0.100 ft³ (2830 cm³) and 0.500 ft³ (14 200 cm³). The measures shall conform to the requirements as shown on figure 1. The actual volume of the measures shall be within ±1.5 percent of the specified nominal volume.

7.2.1.2 *Special Unit Weight Measures.*–Cylindrical metal measures having a capacity less than 0.100 ft³ (2830 cm³), an inside diameter equal to or greater than 2-3/4 inches (70 mm) but less than 4 inches (100 mm), and conforming to the design methodology shown on figure 2. Such measures may only be used when test results are to be used in conjunction with design and/or other special studies and there is not enough soil to use the 0.100-ft³ measure.

7.2.2 *Pouring Device.*–A device consisting of:

7.2.2.1 *Pouring Spouts.*–One of two pouring spouts conforming to the requirements shown on figure 3 may be used, one having an inside pouring spout diameter of 1/2-inch (13 mm) and another having an inside pouring spout diameter of 1-inch (25 mm).

7.2.2.2 *Specimen Container.*–A metal container conforming to the requirements shown on figure 3.

8. Precautions

8.1 *Safety Precautions.*–This procedure may expose persons performing the test to hazardous materials, operations, equipment, and handling heavy loads. It is the responsibility of the person using this procedure to establish appropriate safety practices and to determine the applicability of regulatory limitations prior to use.

8.2 *Technical Precautions*:

8.2.1 Extreme care must be exercised when placing the specimen so that the loosest possible state will be achieved using this procedure. If the unit weight measure is vibrated or jarred in any way during the test, the unit weight measure should be emptied and a new specimen placed.

8.2.2 Due to the effects of sampling, handling, processing, and testing on some materials, results of this test may not reflect in-place conditions or the properties of the material caused by processing and placement during construction. Of particular concern are materials such as soft and/or friable decomposed granite, sandstone, shale, limestone, claystone, etc., or soils affected by air and/or

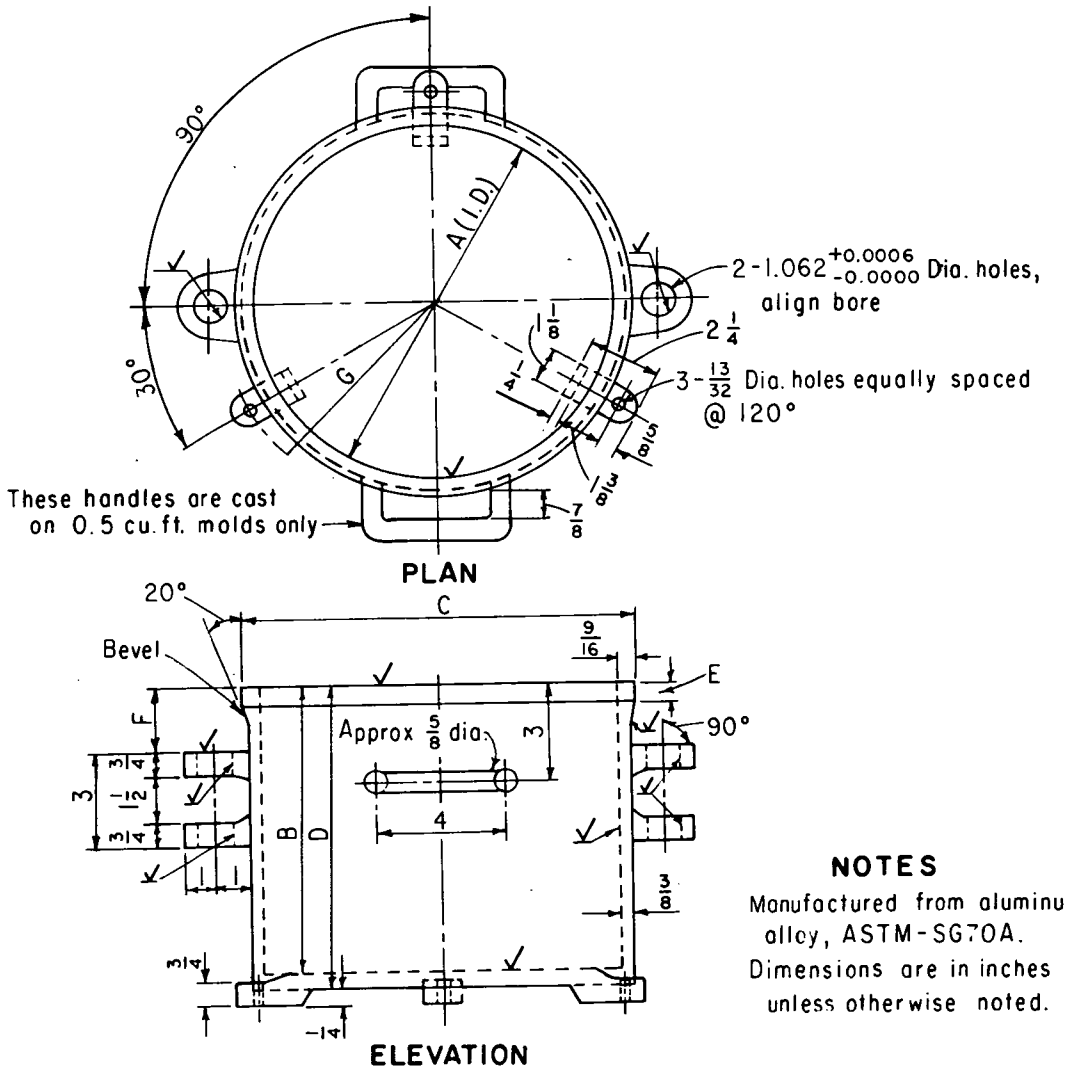

SIZE MEASURE FT^3 (cm^3)	DIMENSIONS, IN. (mm)						
	A	B	C	D	E	F	G
0.1 (2831)	6.000(152.4)	6.112(155.2)	7 1/8(181.0)	6 1/2(165.1)	1/2 (12.7)	1 1/8(28.6)	4.0(101.6)
0.5(14158)	11.000(279.4)	9.092(230.9)	12 1/8(308.0)	9 1/2(241.3)	5/8 (15.9)	2 (50.8)	6.5(165.1)

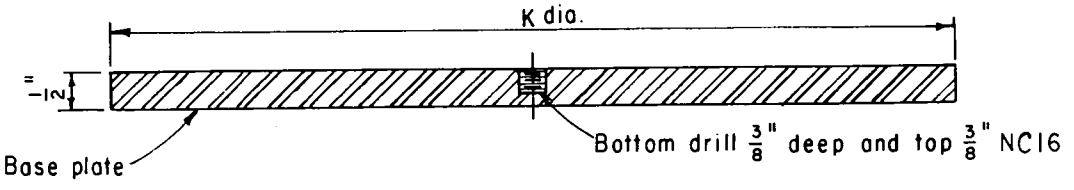

MEASURE SIZE ft^3 (cm^3)	K Dimensions in (mm)
0.1(2831)	5.969 (152)
0.5(14158)	10.938(278)

Figure 1. – Standard unit weight measures.

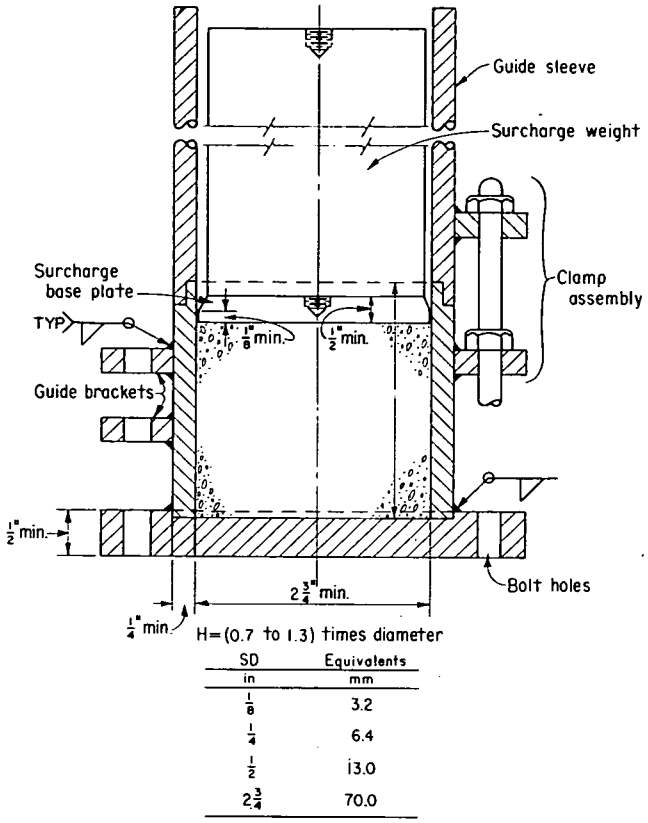

SD	Equivalents
in	mm
1/8	3.2
1/4	6.4
1/2	13.0
2 3/4	70.0

Figure 2. – Special unit weight measures [ASTM D 4254].

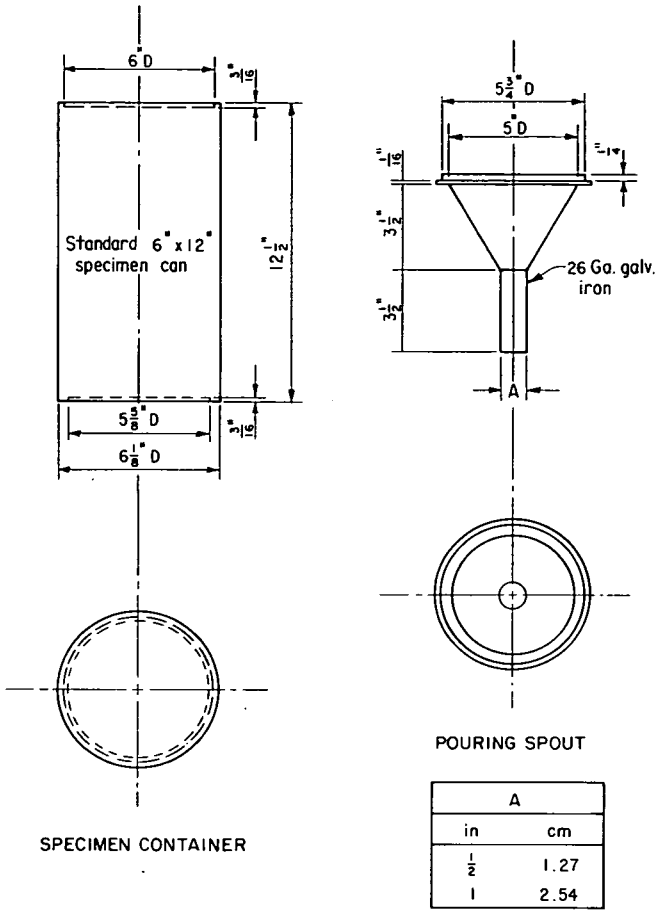

A	
in	cm
1/2	1.27
1	2.54

Figure 3. – Minimum index unit weight pouring device.

oven drying. Such materials must be identified before processing and the person requesting the test should verify whether standard procedures are to be followed, whether modifications are appropriate, or whether the material should be processed and tested at all. Cautionary statements must be made on test data forms and in reporting the test data.

9. Sampling, Test Specimens, and Test Units

9.1 *Sample Preparation.*–Prepare a test sample in accordance with USBR 5205 using only the minus 3-inch (75-mm) fraction of the soil.

9.2 *Specimen Preparation*:

9.2.1 Select the appropriate amount of material for the test specimen according to the requirements of table 1.

9.2.2 Dry the material obtained in subparagraph 9.2.1 in accordance with the procedure outlined in USBR 5300.

NOTE 3.–For rapid drying of soils containing less than 15-percent fines (minus No. 200), a suitable source of heat such as an electric or gas hotplate may be used. If a source of heat other than a controlled temperature is used, stir the specimen to accelerate drying and to avoid localized overheating. The soil may be considered dry when further heating causes, or would cause, less than 0.1 percent additional loss in mass.

Table 1. – Specimen and equipment requirements.

Maximum size soil particle		Specimen mass required		Placement	Size of unit weight measure	
in	mm	lbm	kg	device used	ft³	cm³
No. 4 sieve or less	4.75	25	12	1/2-inch spout	0.1	2 830
3/8	9.5	25	12	1-inch spout	0.1	2 830
3/4	19.0	25	12	1-inch spout	0.1	2 830
1-1/2	37.5	75	35	Scoop	0.5	14 200
3	75	75	35	Scoop	0.5	14 200

10. Calibration and Standardization

10.1 Verify that equipment is currently calibrated in accordance with the applicable calibration procedure. If the calibration is not current, perform the calibration before using the equipment for this procedure.

USBR 1010 Calibrating Unit Weight Measures
USBR 1012 Calibrating Balances or Scales
USBR 1020 Calibrating Ovens

11. Conditioning

11.1 Allow the specimen, as dried in subparagraph 9.2.2, to cool to near room temperature before beginning the procedure.

11.2 In humid environments, the specimen may absorb enough moisture from the air to alter test results. In such cases, special steps should be taken to ensure that the specimen does not absorb undue amounts of moisture, such as placing in a desiccator during cooling.

12. Procedure

12.1 All data are to be recorded on the "Relative Density Determination" form, Minimum Index Unit Weight Determination section as shown on figure 4 (method A) or figure 5 (method B).

12.2 Select the required unit weight measure and placement device in accordance with table 1.

12.2.1 Determine and record the mass of the measure to the nearest 0.01 lbm.

12.3 Break up any aggregations of individual soil particles caused by the drying procedure.

12.4 Thoroughly mix the dried specimen to ensure an even distribution of particle sizes.

12.5 *Method A — Minimum Index Unit Weight Determination Using a Pouring Device*:

12.5.1 Place the dried soil specimen into the specimen container using a scoop; be careful to minimize segregation of the material during filling.

12.5.2 Attach the pouring spout to the specimen container.

12.5.3 Position the unit weight measure in a mixing pan large enough to hold the measure and any excess soil that will subsequently be trimmed from the surface of the soil specimen. The pan must be placed on a firm surface to avoid any movement of the unit weight measure during placement and trimming procedures.

12.5.4 Hold a finger over the pouring spout and invert the pouring device to a vertical, or near vertical position, within the measure.

12.5.5 Remove the finger from the pouring spout and allow the soil to pour from the pouring device into the unit weight measure in a steady stream.

NOTE 4.–Occasionally, clogging of the spout may occur. Generally, this is caused from bulking of the material due to: (a) moisture in the soil, (b) cementation or aggregation of individual soil particles, or (c) angularity of the particles. These conditions may be remedied by attention to proper sample and specimen preparation for cases (a) and (b). If clogging is due to angular particles, such as shells, crushed rock, slag, etc., the use of a placement device designated for a larger maximum size soil particle is required. Note in the *Remarks* section on the test data form if a placement device, other than that specified, was used.

12.5.6 Keep the end of the pouring spout above the soil surface to maintain a free fall of soil between 1/2 to 1 inch (10 to 25 mm), or just high enough to maintain continuous flow of the soil without the pouring spout contacting the already deposited soil.

12.5.7 Move the pouring device in a spiral-like path from the outside wall to the center of the measure and back to the outside to form layers of nearly uniform thickness. The spiral-like motion should be just sufficient to minimize particle segregation.

12.5.8 Fill the unit weight measure approximately 1/2 to 1 inch (10 to 25 mm) above the top of the measure or until all points of the soil surface are above the plane of the measure rim.

12.5.9 Screen off the excess soil level with the measure rim by carefully trimming the soil surface with the straightedge.

NOTE 5.–Great care must be exercised during filling and trimming operations to avoid jarring the measure or excessively disturbing the soil surface, thereby causing rearrangement and settlement of soil particles.

12.5.10 Make one, or if necessary, two passes of the straightedge to level the soil surface with the top of the measure.

12.5.11 Use a brush to remove any soil residue remaining on the rim or exterior protusions of the measure.

12.5.12 Lightly tap the side of the measure so the specimen settles slightly to ensure that no soil is lost from the measure.

12.5.13 Determine and record the mass of the soil and the measure to the nearest 0.01 lbm.

12.5.14 Record the volume of the unit weight measure (determined in calibration procedure USBR 1010) to the nearest 0.0001 ft^3.

12.5.15 Calculate and record the mass of soil contained in the measure to the nearest 0.01 lbm.

12.5.16 Calculate dry density of the soil to the nearest 0.1 lbm/ft^3.

12.5.17 Convert the value of dry density obtained in subparagraph 12.5.16 to dry unit weight by changing lbm/ft^3 to lbf/ft^3 (assume 1 lbm = 1 lbf) and record the value to the nearest 0.1 lbf/ft^3.

12.5.18 Empty the unit weight measure and brush away any soil residue.

12.5.19 Repeat subparagraphs 12.1 through 12.5.17 to obtain a second value of dry unit weight.

12.5.20 Determine the uniformity of the two unit weight values obtained by dividing either value by the other. The ratio must be between 0.990 and 1.010, inclusive. If it is not, the procedure is to be repeated until two successive values of dry unit weight are obtained which fall within the specified tolerance.

12.5.21 Select the dry unit weight having the lower numerical value from the two values meeting the criteria specified in subparagraph 12.5.20 and record the value as the minimum index unit weight to the nearest 0.1 lbf/ft^3.

12.5.22 If required, convert the minimum index unit weight value obtained in subparagraph 12.5.21 to SI units and record to the nearest 0.02 kN/m^3.

NOTE 6.–Typically, the unit weight measure filled with soil for the minimum index unit weight determination is used for the maximum index unit weight determination (dry method) without refilling the measure. If the maximum index unit weight (dry method) is to be determined, the last specimen placed should be retained.

12.6 *Method B — Minimum Index Unit Weight Determination Using a Hand Scoop*:

12.6.1 Position the unit weight measure in a mixing pan as described in subparagraph 12.5.3.

12.6.2 Place the soil into the unit weight measure using a scoop; be careful to minimize segregation of the material.

12.6.3 Place the soil as loosely as possible by holding the scoop just above the measure bottom or the already deposited soil.

12.6.4 Allow the soil to slide rather than fall onto the previously placed soil. If necessary, hold back large particles with the fingers to prevent them from rolling off the scoop. The placed soil is to be a nearly homogenous mass throughout the measure (see note 5).

12.6.5 Do not segregate large and small particles within the measure; this may be convenient for the screeding or leveling operation but it is not representative of the soil properties.

12.6.6 Fill the measure to overflowing, but not more than 1 inch (25 mm) above the top of the measure.

12.6.7 For soils where the maximum particle size passes the 3/4-inch (19.0-mm) sieve, use the steel straightedge, and fingers (when required) to level the surface of the soil with the top of the measure. For soils with larger maximum particle sizes, use the fingers to condition the soil surface in such a way so that slight projections of the larger maximum sized particles above the top of the measure are approximately balanced by voids in the surface below the plane established by the top of the measure. Use the steel straightedge to establish the plane if necessary. (Be careful not to compress or disturb the soil.) Visualize that the projecting material would exactly fill the voids if the soil could be divided at the plane.

12.6.8 Use a brush to remove any soil residue remaining on the rim or exterior protusions of the measure.

12.6.9 Calculate and record the value of dry unit weight in accordance with subparagraphs 12.5.13 through 12.5.17.

12.6.10 Repeat subparagraphs 12.1 through 12.4 and 12.6.1 through 12.6.9 to obtain a second value of dry unit weight.

12.6.11 Determine and record the minimum index unit weight in accordance with subparagraphs 12.5.20 through 12.5.22.

13. Calculations

13.1 Calculations are shown on the "Relative Density Determination" form, Minimum Index Unit Weight Determination section (fig. 4 or 5).

14. Report

14.1 The report is to consist of a completed and checked "Relative Density Determination" form, Minimum Index Unit Weight Determination section (fig. 4 or 5).

14.2 All calculations are to show a checkmark.

15. Background Reference

"Standard Test Method for Minimum Index Density of Soils and Calculation of Relative Density," *Annual Book of ASTM Standards*, D 4254.

7-1709A (8-86)
Bureau of Reclamation

RELATIVE DENSITY DETERMINATION

Designation USBR 5525-89
Designation USBR 5530-__
Designation USBR 7250-__

SAMPLE NO.	PROJECT	FEATURE
1	Example	Example

% GRAVEL	% SAND	% FINES	MAX. PARTICLE SIZE	NOMINAL VOLUME OF MEASURE
——	97	3	No. 4	[X] 0.1 ft³ [ ] 0.5 ft³

TESTED BY	DATE	COMPUTED BY	DATE	CHECKED BY	DATE

MINIMUM INDEX UNIT WEIGHT DETERMINATION (USBR 5525)

Measure No.			5	5
Specimen No.			1	1
(1)	Mass of soil + measure	(lbm)	17.22	17.15
(2)	Mass of measure	(lbm)	7.45	7.45
(3)	Volume of measure*	(ft^3)	0.1004	0.1004
(4)	Mass of soil (1)-(2)	(lbm)	9.77	9.70
(5)	Dry unit weight** (4)/(3)	(lbf/ft^3)	97.3	96.6
(6)	Minimum index unit weight	(lbf/ft^3)	96.6	
(7)	Minimum index unit weight = (6) x 0.1571***	(kN/m^3)	15.2	

PLACEMENT DEVICE USED
1/2-inch spout [X] 1-inch spout [ ] Scoup [ ]

MOISTURE CONTENT DETERMINATION

(16)	Container No.		
(17)	Mass of container + wet soil	lbm	
(18)	Mass of container + dry soil	lbm	
(19)	Mass of container	lbm	
(20)	Mass of water = (17) - (18)	lbm	
(21)	Mass of dry soil = (18) - (19)	lbm	
(22)	Moisture content = [(20)/(21)] x 100	%	

MAXIMUM INDEX UNIT WEIGHT DETERMINATION (USBR 5530)

			DRY METHOD	WET METHOD
Specimen No.				
(1)	Left dial reading	in		
(2)	Right dial reading	in		
(3)	Average dial reading	in		
(4)	Specimen height at zero dial*	in		
(5)	Specimen height = (3) + (4)	in		
(6)	Volume per unit height*	ft^3/in		
(7)	Specimen volume = (5) x (6)	ft^3		
(8)	Mass of measure + soil	lbm		
(9)	Mass of measure	lbm		
(10)	Mass of dry soil = (8) - (9) [dry method]	lbm		
(11)	Mass of wet soil = (8) - (9) [wet method]	lbm		
(12)	Mass of dry soil = (11)/[1+((22)/100)]	lbm		
(13)	Dry unit weight** = (10)/(7) or (12)/(7)	lbf/ft^3		
(14)	Maximum index unit weight	(lbf/ft^3)		
(15)	Maximum index unit weight (14) x 0.1571*** =	(kN/m^3)		

REMARKS:

PERCENT RELATIVE DENSITY (USBR 7250 METHOD A)

(1)	In-place unit weight minus 3-inch (75 mm)	
(2)	Maximum index unit weight USBR 5530 (14) or (15)	
(3)	Minimum index unit weight USBR 5525 (6) or (7)	
(4)	(2) x [(1) - (3)]	
(5)	(1) x [(2) - (3)]	
(6)	Percent Relative Density = [(4)/(5)] x 100	

*Values obtained from Designation USBR 1010
**Implies 1 lbm = 1 lbf
***0.1571 converts lbf/ft^3 to kN/m^3

AUXILIARY TESTS
USBR 5300-89
USBR 1010-89
IN PLACE UNIT WEIGHT PERFORMED IN ACCORDANCE WITH USBR ____ __

GPO 852 - 183

Figure 4. – Relative density determination (method A) — example.

7-1709A (8-86)
Bureau of Reclamation

RELATIVE DENSITY DETERMINATION

Designation USBR 5525-89
Designation USBR 5530-__
Designation USBR 7250-__

SAMPLE NO.	PROJECT	FEATURE
2	Example	Example

% GRAVEL	% SAND	% FINES	MAX. PARTICLE SIZE	NOMINAL VOLUME OF MEASURE
100	____	____	1 1/2 inches	☐ 0.1 ft³ ☒ 0.5 ft³

TESTED BY	DATE	COMPUTED BY	DATE	CHECKED BY	DATE

MINIMUM INDEX UNIT WEIGHT DETERMINATION (USBR 5525)

Measure No.			2	2
Specimen No.			1	2
(1)	Mass of soil + measure	(lbm)	64.65	64.25
(2)	Mass of measure	(lbm)	20.30	20.30
(3)	Volume of measure*	(ft^3)	0.4989	0.4989
(4)	Mass of soil (1)-(2)	(lbm)	44.35	43.95
(5)	Dry unit weight** (4)/(3)	(lbf/ft^3)	88.9	88.1
(6)	Minimum index unit weight	(lbf/ft^3)	88.1	
(7)	Minimum index unit weight = (6) x 0.1571***	(kN/m^3)	13.8	

PLACEMENT DEVICE USED
1/2-inch spout ☐ 1-inch spout ☐ Scoop ☒

MOISTURE CONTENT DETERMINATION

(16)	Container No.		
(17)	Mass of container + wet soil	lbm	
(18)	Mass of container + dry soil	lbm	
(19)	Mass of container	lbm	
(20)	Mass of water = (17) - (18)	lbm	
(21)	Mass of dry soil = (18) - (19)	lbm	
(22)	Moisture content = [(20)/(21)] x 100	%	

MAXIMUM INDEX UNIT WEIGHT DETERMINATION (USBR 5530)

			DRY METHOD	WET METHOD
Specimen No.				
(1)	Left dial reading	in		
(2)	Right dial reading	in		
(3)	Average dial reading	in		
(4)	Specimen height at zero dial*	in		
(5)	Specimen height = (3) + (4)	in		
(6)	Volume per unit height*	ft^3/in		
(7)	Specimen volume = (5) x (6)	ft^3		
(8)	Mass of measure + soil	lbm		
(9)	Mass of measure	lbm		
(10)	Mass of dry soil = (8) - (9) [dry method]	lbm		
(11)	Mass of wet soil = (8) - (9) [wet method]	lbm		
(12)	Mass of dry soil = (11)/[1+((22)/100)]	lbm		
(13)	Dry unit weight** = (10)/(7) or (12)/(7)	lbf/ft^3		
(14)	Maximum index unit weight	(lbf/ft^3)		
(15)	Maximum index unit weight (14) x 0.1571***	(kN/m^3)		

REMARKS: ____

PERCENT RELATIVE DENSITY (USBR 7250 METHOD A)

(1)	In-place unit weight minus 3-inch (75 mm)	
(2)	Maximum index unit weight USBR 5530 (14) or (15)	
(3)	Minimum index unit weight USBR 5525 (6) or (7)	
(4)	(2) x [(1) - (3)]	
(5)	(1) x [(2) - (3)]	
(6)	Percent Relative Density = [(4)/(5)] x 100	

*Values obtained from Designation USBR 1010
**Implies 1 lbm = 1 lbf
***0.1571 converts lbf/ft^3 to kN/m^3

AUXILIARY TESTS
USBR 5300-89
USBR 1010-89
IN PLACE UNIT WEIGHT PERFORMED IN ACCORDANCE WITH USBR ____ __

GPO 852 - 183

Figure 5. – Relative density determination (method B) — example.

UNITED STATES DEPARTMENT OF THE INTERIOR
BUREAU OF RECLAMATION

USBR 5530-89

PROCEDURE FOR

DETERMINING THE MAXIMUM INDEX UNIT WEIGHT OF COHESIONLESS SOILS

INTRODUCTION

This procedure is under the jurisdiction of the Geotechnical Services Branch, Code D-3760, Research and Laboratory Services Division, Denver Office, Denver, Colorado. The procedure is issued under the fixed designation USBR 5530. The number immediately following the designation indicates the year of acceptance or the year of last revision.

1. Scope

1.1 This designation outlines the procedure for determining the maximum index unit weight of cohesionless, free-draining soils using an electromagnetic, vertically vibrating table.

1.2 Two alternative procedures are outlined to determine the maximum index unit weight.

1.2.1 *Dry Method.*–Using oven dried soil and an electromagnetic, vertically vibrating table.

1.2.2 *Wet Method.*–Using wet soil and an electromagnetic, vertically vibrating table.

1.3 It is recommended that both the dry and wet methods be performed when beginning a new test program or when a change in soil type is encountered as the value of maximum index unit weight—when considered along with the minimum index weight—affects the calculated value of relative density. While the dry method often is preferred because results can be obtained more quickly, the wet method should be used if it produces a maximum index unit weight more than 3 percent greater than that obtained by the dry method.

1.4 This procedure is normally performed for soils containing less than 5-percent fines. It may be used, under certain circumstances, for soils containing 5- to 15-percent fines. This procedure is limited to soils with a maximum particle size of 3 inches.

1.5 For many types of free-draining, cohesionless soils, the vibratory procedure causes a moderate amount of degradation (particle breakdown). When degradation occurs, there is often an increase in the maximum index unit weight obtained and comparable test results may not be obtained when different size measures are used to test a given soil.

NOTE 1.–There may be special cases when evaluation of applicability of percent relative density may be appropriate for some cohesionless silts or sandy silts even though they may not be considered free-draining materials.

2. Auxiliary Tests

2.1 A test sample must be obtained in accordance with USBR 5205 prior to performing this procedure. USBR 5525 and 7250 must be performed in conjunction with this procedure in order to determine percent relative density.

2.2 Maximum index unit weight values are sensitive to the amplitude of vibration produced by the vibratory table. Therefore, the table must be currently calibrated in accordance with USBR 1440.

3. Applicable Documents

3.1 *USBR Procedures*:

USBR 1007 Calibrating Dial Indicators
USBR 1010 Calibrating Unit Weight Measures
USBR 1012 Calibrating Balances or Scales
USBR 1020 Calibrating Ovens
USBR 1440 Calibrating the Vibratory Table for Maximum Index Unit Weight Testing
USBR 3900 Standard Definitions of Terms and Symbols Relating to Soil Mechanics
USBR 5205 Preparing Soil Samples by Splitting or Quartering
USBR 5300 Determining Moisture Content of Soil and Rock by the Oven Method
USBR 5500 Performing Laboratory Compaction of Soils — 5.5-lbm Rammer and 18-in Drop
USBR 5510 Performing Laboratory Compaction of Soils — Harvard Miniature
USBR 5515 Performing Laboratory Compaction of Soils Containing Gravel
USBR 5525 Determining the Minimum Index Unit Weight of Cohesionless Soils
USBR 7240 Performing Rapid Method of Construction Control
USBR 7250 Determination of Percent Relative Density

4. Summary of Method

4.1 The maximum index unit weight of a given cohesionless free-draining soil is determined by placing either oven-dried or wet soil in a measure, applying a 2-lbf/in^2 (14-kPa) surcharge to the surface of the soil and then vertically vibrating the measure, soil, and surcharge using an electromagnetic, vibrating table having a

sinusoidal time-vertical displacement relationship at a double amplitude of vertical vibration (peak-to-peak displacement) of 0.013±0.002 inch (0.33±0.05 mm) for 8 minutes at 60 hertz (Hz). The soil is then dried, if required, and the maximum index density is calculated by dividing the ovendried mass of the densified soil by its volume. The maximum index unit weight is calculated from the maximum index density.

5. Significance and Use

5.1 The maximum index unit weight is the dry unit weight of a soil placed at the densest state of compactness using a standard laboratory procedure which minimizes particle segregation and breakdown. An absolute maximum unit weight is not necessarily obtained using this procedure.

5.2 To determine the percent relative density of a cohesionless free-draining soil at any given unit weight, the unit weight of the soil in its loosest and densest states must be obtained using standard laboratory procedures. USBR 5525 must be performed to determine the unit weight of the soil in its loosest state. USBR 7250 is performed to determine the percent relative density.

5.3 Construction control of cohesionless soil is often based on percent relative density of that soil.

5.4 The compaction characteristics of soils vary depending on the gradation of the soil and the cohesiveness of any fines. Generally, the laboratory compaction test is most applicable for soils containing more than 15-percent fines. For construction control of these soils, percent compaction is used to determine the adequacy of compaction. For soils containing less than 5-percent fines, the minimum and maximum index unit weight tests are used to evaluate the compaction characteristics. For construction control of these soils, percent relative density is used to determine the adequacy of compaction.

Soils containing 5 to 15 percent fines may need to be tested using both the laboratory compaction test and the combination of the minimum-maximum index unit weight tests to see which is most appropriate. Whether percent compaction or percent relative density is used for construction control depends on the test results and how the soil is being used. See USBR 7250 or 7255 (app. X1) for further discussion.

6. Terminology

6.1 Definitions are in accordance with USBR 3900. A term of particular significance is:

6.1.1 *Relative Density* (D_d).-The ratio of: (1) the difference between the void of a cohesionless soil in the loosest state and any given void ratio, to (2) the difference between its void ratios in the loosest and in the densest states (ASTM).

NOTE 2.-The term "relative density" is used even though it is calculated using dry unit weights. This is because of broad usage of the term and to prevent confusion by using a new term. Technically, if densities rather than dry unit weights were used to calculate the term, the value of percent relative density would be identical.

6.2 Terms not included in USBR 3900 specific to this designation are:

6.2.1 *Maximum Index Unit Weight*, γ_{dmax}.-The reference dry unit weight of a soil in the densest state of compactness that can be attained using a standard laboratory compaction procedure that minimizes particle segregation and breakdown (USBR 5530).

6.2.2 *Minimum Index Unit Weight*, γ_{dmin}.-The reference dry unit weight of a soil placed at the loosest state of compactness using a standard laboratory procedure which prevents bulking and minimizes particle segregation (USBR 5525).

7. Apparatus

7.1 *General Apparatus*:

7.1.1 *Balance or Scale.*-Typical balances or scales used for this designation are:

Application	*Readable to*	*Approximate capacity*
0.1 ft³ Measure	0.01 lbm	50 lbm
0.5 ft³ Measure	0.01 lbm	150 lbm
Special measures	0.01 lbm	50 lbm

7.1.2 *Brush.*-Hair-bristled dusting brush.

7.1.3 *Drying Oven.*-An oven, thermostatically controlled, preferably of the forced-draft type, and capable of maintaining a uniform temperature of 230±9 °F (110±5 °C) throughout the drying chamber.

7.1.4 *Hand Scoops.*-Flat bottom hand scoops with handle; small scoop, approximate bowl dimensions, 3-1/2 by 6 inches; large scoop, approximate bowl dimensions, 5-1/2 by 7-1/2 inches.

7.1.5 *Hoist.*-A rope, chain, or cable hoist of at least 300-lbm (140-kg) capacity.

7.1.6 *Mixing Pans.*-Large metal mixing pans about 36 by 24 by 4 inches (900 by 600 by 100 mm), or medium metal mixing pans about 16 by 16 by 2 inches (400 by 400 by 50 mm).

7.1.7 *Stopwatch.*-Watch readable to 1 second.

7.2 *Equipment Unique to This Procedure*:

7.2.1 *Unit Weight Measures*:

7.2.1.1 *Standard Unit Weight Measures.*-Cylindrical metal measures having nominal volumes of 0.100 ft³ (2830 cm³) and 0.500 ft³ (14 200 cm³). The measures shall conform to the requirements as shown on figure 1. The actual volume of the measures shall be within ±1.5 percent of the specified nominal volume.

7.2.1.2 *Special Unit Weight Measures.*-Cylindrical metal measures having a capacity less than 0.100 ft³ (2830 cm³), an inside diameter equal to or greater than 2-3/4 inches (70 mm) but less than 4 inches (100 mm), and conforming to the design methodology presented on figure 2. Such measures may be used only when the test results are to be used in conjunction with design and/or other special studies and there is not enough soil to use the 0.100-ft³ measure.

7.2.2 *Guide Sleeves.*-One guide sleeve with clamp assembly, or other suitable attachment devices (see figs. 3 and 4), for each size measure.

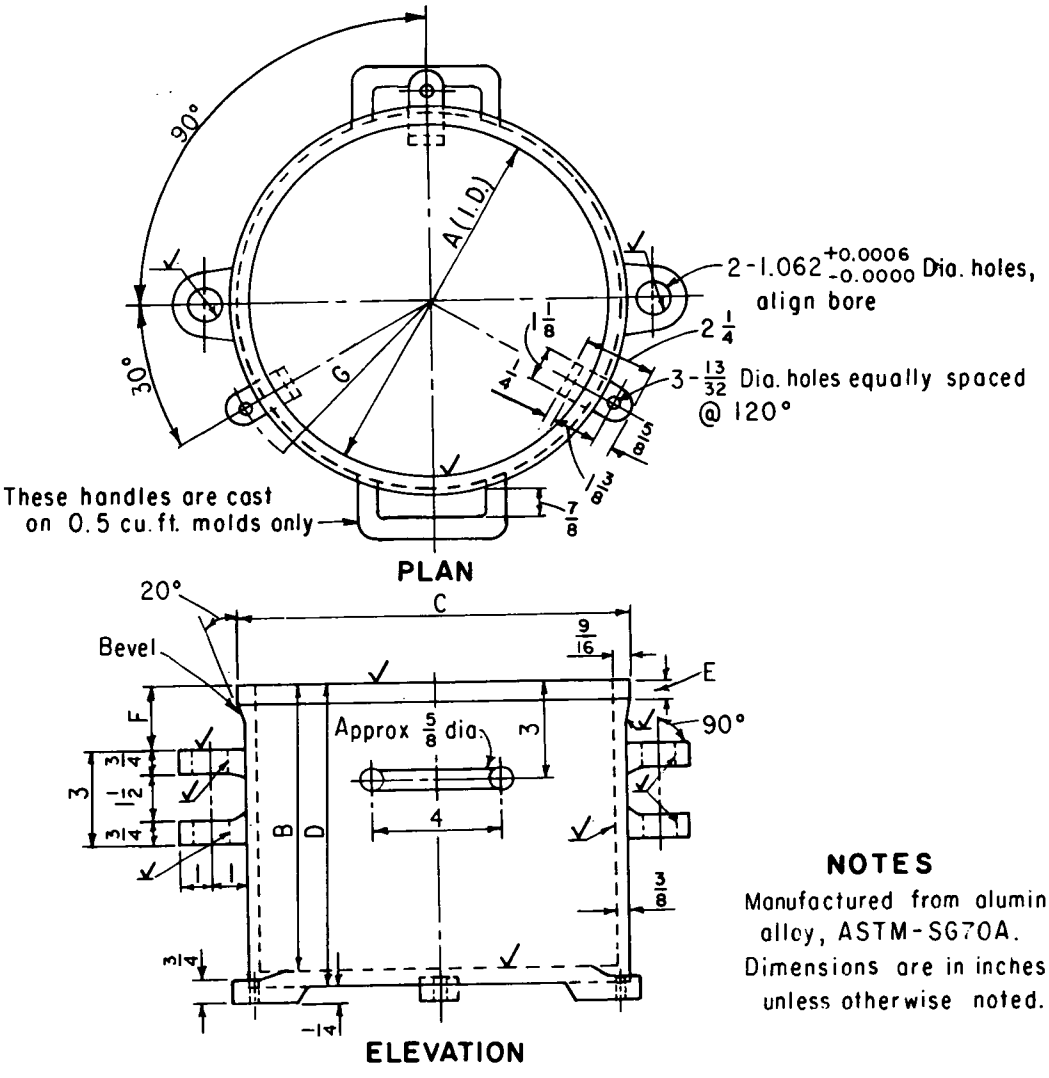

NOTES

Manufactured from aluminum alloy, ASTM-S670A.
Dimensions are in inches unless otherwise noted.

SIZE MEASURE FT³ (cm³)	DIMENSIONS, IN. (mm)						
	A	B	C	D	E	F	G
0.1 (2831)	6.000(152.4)	6.112(155.2)	7 1/8(181.0)	6 1/2(165.1)	1/2 (12.7)	1 1/8(28.6)	4.0(101.6)
0.5(14158)	11.000(279.4)	9.092(230.9)	12 1/8(308.0)	9 1/2(241.3)	5/8 (15.9)	2 (50.8)	6.5(165.1)

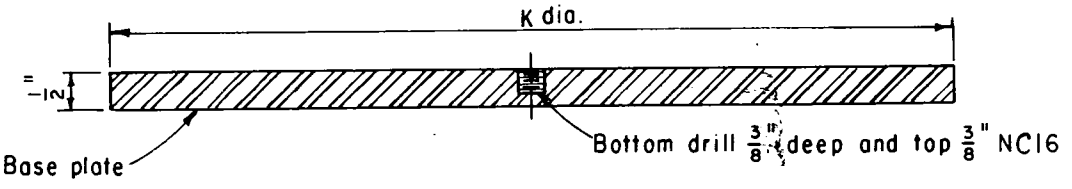

MEASURE SIZE ft³ (cm³)	K Dimensions in (mm)
0.1(2831)	5.969 (152)
0.5(14158)	10.938(278)

Figure 1. – Standard unit weight measure and surcharge baseplate.

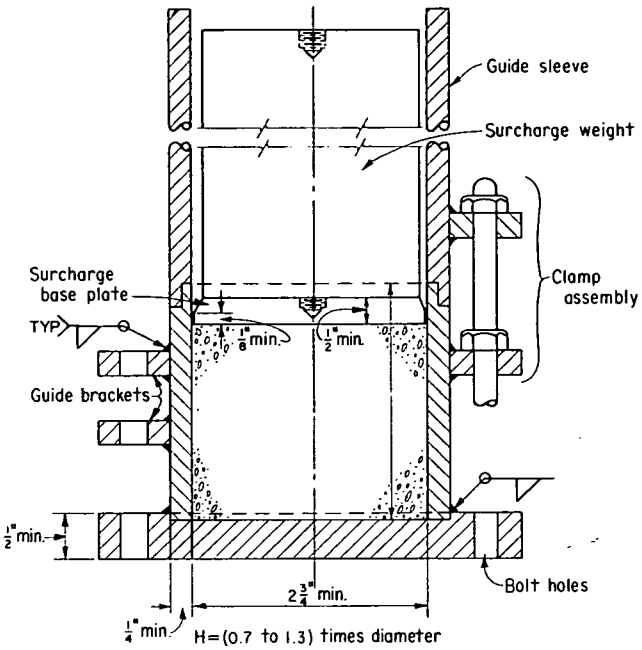

SD	Equivalents
in	mm
1/8	3.2
1/4	6.4
1/2	13.0
2 3/4	70.0

Figure 2. – Special cylindrical unit weight measure. [ASTM D 4253]

7.2.3 *Surcharge Baseplates.*–One surcharge baseplate for each standard size or special measure conforming to the requirements of figure 5 or 2.

7.2.4 *Surcharge Masses.*–One surcharge mass for each size measure. See figure 5 for tolerances related to the 0.100-ft³ (2830-cm³) and 0.500-ft³ (14 200-cm³) measures. For special measures, similar tolerances should be maintained. The total mass of the surcharge baseplate and surcharge mass shall be equivalent to a surcharge pressure of 2.00±0.02 lbf/in² (13.8±0.1 kPa) for the measure being used. For special measures, the surcharge mass can be composed of a single solid mass of metal.

7.2.5 *Surcharge Baseplate Handle.*–A device used to initially place and then to remove the surcharge baseplate upon completion of compaction. Any convenient hooking device may be used.

7.2.6 *Vibrating Table* (fig. 6).–The table shall be mounted to a concrete floor or mass of sufficient size and configuration such that excess vibrations are not transmitted to other testing areas. The vertically vibrating deck of the table is to be of sufficient size and rigidity that the measure assembly being used can be attached and rigidly supported during the test. The electromagnetic vibratory table is to be capable of vertically vibrating the measure assembly with a sinusoidal time-vertical displacement relationship at an average double amplitude (peak-to-peak displacement) of 0.013±0.002 inch (0.33±0.05 mm) at a frequency of 60±2 Hz under test conditions. The table shall have the capability for adjustment of the double amplitude of vibration between about 0.005 inch (0.15 mm) and 0.013 inch (0.33 mm) at 60 Hz.

7.2.7 *Electromagnetic Vibrating Table.*–A table conforming to the general requirements of 7.2.6 with a vertically vibrating cushioned steel deck, generally about 30 by 30 by 3/8 inch (760 by 760 by 9.5 mm) thick, actuated by an electromagnetic vibrator of the solid impact type with a net mass over 100 lbm (45 kg). The table shall be mounted to a concrete floor or slab of at least 950 lbm (430 kg).

7.2.8 *Controller.*–An electrical control unit suitable for use with the electromagnetic vibrating table (subpar. 7.2.6). The unit must include an operating switch, a rheostat, and rectifier. In addition, the control unit should be equipped with a 0 to 300 volt a-c voltmeter wired to the power supply side and a 0 to 15 amp ammeter wired to the equipment side of the terminal.

7.2.9 *Dial Indicator (Gauge) Assembly.*–A device used for specimen volume measurement. The assembly shall consist of a dial indicator (gauge) having a 2.000-inch, or greater, range with 0.001-inch, or finer, graduations; mounted on a dial indicator holder such that the indicator stem is parallel with the vertical axis of the measure. The assembly may be equipped with a spacer ring(s), used to extend the range of the assembly, if required.

7.2.10 *Calibration (Gauge) Bar* (fig. 6).–A straight metal bar about 2 by 12 by 1/4 inch (50 by 300 by 6 mm).

7.2.11 *Reference Bracket* (fig. 6).–A bracket to hold the dial indicator gauge and provide a reference reading.

7.2.12 *Hold Down Bolts* (fig. 6).–Eye and hook bolts for attaching measure assembly to vibratory table.

7.2.13 *Gauge Case* (fig. 6).–A case to hold and protect the dial indicator gauge.

7.2.14 *Pouring Device.*–A device meeting the specifications as given in subparagraph 7.2.2 of USBR 5525.

8. Precautions

8.1 *Safety Precautions*:

8.1.1 This procedure may expose persons performing the test to hazardous materials, operations, equipment, and handling heavy loads. It is the responsibility of the person using this procedure to establish appropriate safety practices and to determine the applicability of regulatory limitations prior to use.

8.1.2 Use of vibratory tables in certain acoustic environments may produce noise levels above those considered acceptable. In areas where such conditions exist or where acoustic monitoring surveys have not been conducted, suitable hearing protection devices should be used. In addition, testing personnel should adhere also to any additional personal safety requirements in accordance with individual laboratory policies.

8.2 *Technical Precautions*:

8.2.1 Maximum index unit weight values are sensitive to the amplitude of vibration. The vibratory table

must be calibrated in accordance with USBR 1440 before using it. The table must be operated at the recommended rheostat setting for the measure in use.

8.2.2 Care must be exercised in placing the specimen when using the wet method. Excessive moisture in the soil may cause particle segregation and/or loss of fines. The gradation of the densified soil should be similar to that of the soil prior to testing.

8.2.3 Due to the effects of sampling, handling, processing, and testing on some materials, results of this test may not reflect in-place conditions or the properties of the material caused by processing and placement during construction. Of particular concern are materials such as soft and/or friable decomposed granite, sandstone, shale, limestone, claystone, etc., or soils affected by air and/or oven drying. Such materials must be identified before processing and the person requesting the test should verify whether standard procedures are to be followed, whether modifications are appropriate, or whether the material should be processed and tested at all. Cautionary statements must be made on test data forms and in reporting the test data.

9. Sampling, Test Specimen, and Test Units

9.1 If the specimen placed and tested in accordance with USBR 5525 is to be used in this procedure, use that specimen as directed in accordance with subparagraphs 13.3.4. through 13.3.19, instead of preparing an additional one. Otherwise, prepare a specimen in accordance with the following steps.

9.2 *Sample Preparation.*–Using only the minus 3-inch (75-mm) fraction of the soil sample, prepare a representative soil sample in accordance with USBR 5205.

9.3 *Specimen Preparation*:

9.3.1 For standard measures, select the appropriate amount of material for the specimen according to the requirements of table 1.

Table 1. – Specimen and equipment requirements.

Maximum size soil particle		Specimen mass required		Placement device used	Size of unit weight measure	
in	mm	lbm	kg		ft^3	cm^3
No. 4 sieve or less	4.75	25	12	1/2-inch spout	0.1	2 830
3/8	9.5	25	12	1-inch spout	0.1	2 830
3/4	19.0	25	12	1-inch spout	0.1	2 830
1-1/2	37.5	75	35	Scoop	0.5	14 200
3	75	75	35	Scoop	0.5	14 200

9.3.2 When it is applicable to use special measures (see subpar. 7.2.1.2), 100 percent of the sample must pass the 3/4-inch (19-mm) sieve and have less than 10 percent retained on the 3/8-inch (9.5-mm) sieve.

9.3.3 If the dry method is to be performed, dry the material in accordance with the procedure outlined in USBR 5300.

NOTE 3.–For rapid drying of soils containing less than 15-percent fines (minus No. 200), a suitable source of heat such as an electric or gas hotplate may be used. If a source of heat other than the controlled temperature is used, stir the specimen to accelerate drying and avoid localized overheating. The soil may be considered dry when further heating causes, or would cause, less than 0.1 percent additional loss in mass.

10. Calibration and Standardization

10.1 Verify that equipment is currently calibrated in accordance with the applicable calibration procedure. If the calibration is not current, perform the calibration before using the equipment for this test procedure.

USBR 1007 Calibrating Dial Indicators
USBR 1010 Calibrating Unit Weight Measures
USBR 1012 Calibrating Balances or Scales
USBR 1020 Calibrating Ovens
USBR 1440 Calibrating the Vibratory Table for Maximum Index Unit Weight Testing

11. Conditioning

11.1 Allow the specimen, as dried in subparagraph 9.3.3, to cool to near room temperature before beginning the test (dry method).

11.1.1 In humid environments, the ovendried specimen may absorb enough moisture from the air to alter test results. In such cases, special steps should be taken to ensure that the specimen does not absorb undue amounts of moisture, such as placing it in a desiccator during cooling.

11.2 The wet method may be conducted on ovendried soil to which sufficient water is added or, if appropriate, on wet soil from the field. Mix the sample to provide an even distribution of particle sizes and moisture content with as little segregation as possible. If water is added to dry soil, allow a minimum conditioning period of one-half hour. The amount of water added should be just sufficient such that free water does not accumulate in the mixing pan.

12. Preparation of Apparatus

12.1 For a measure assembly in which the alignment of the guide sleeve on top of the measure is controlled by the position of the set screws, assemble the guide sleeve on top of the measure and tighten the clamp assemblies so that the inner wall of the sleeve is in line with the inner wall of the mold. Tighten the lock nuts on the two set screws so equipped. Loosen the set screw having no lock nut, and remove the guide sleeve.

12.2 Verify that the vibrating table is in good working condition in accordance with requirements of USBR 1440.

13. Procedure

13.1 All data are to be recorded on the "Relative Density Determination" form Maximum Index Unit Weight Determination section as shown on figure 7 (dry method) or figure 8 (wet method).

13.2 Select the required unit weight measure and placement device in accordance with table 1.

13.2.2 Determine and record the mass of the measure to the nearest 0.01 lbm.

13.3 *Dry Method*:

13.3.1 Break up any aggregations of individual soil particles caused by the drying procedure.

13.3.2 Thoroughly mix the dried specimen to ensure an even distribution of particle sizes.

13.3.3 Dependent upon the maximum size soil particle, place the soil in the measure according to USBR 5525 subparagraphs 12.5 through 12.5.12 or 12.6 through 12.6.8.

13.3.4 Attach the measure to the vibrating table.

13.3.5 Place the appropriate surcharge baseplate on the surface of the soil and twist it slightly several times so that it is firmly and uniformly in contact with the surface of the soil. Remove the surcharge baseplate handle.

13.3.6 Firmly attach the guide sleeve to the measure, and lower the appropriate surcharge mass onto the surcharge baseplate. Use a hoist if necessary.

13.3.7 Set the vibrator control (rheostat) at the appropriate setting determined in accordance with USBR 1440 for the measure assembly being used to obtain a double amplitude of vertical vibration of 0.013±0.002 inch (0.33±0.05 mm) at 60 Hz.

13.3.8 Vibrate the measure assembly and specimen for 8±1/4 minute at 60±2 Hz. Remove the surcharge mass and guide sleeve from the measure. Check that the surcharge baseplate is firmly and uniformly in contact with the surface of the soil; i.e., does not wobble when pressed at the edges. If it wobbles, this should be noted on the data form.

13.3.9 Place the dial indicator assembly in the reference bracket. Compare the reading obtained with the reference bracket reading established in USBR 1010. Adjust the dial indicator gauge if necessary.

13.3.10 Brush aside any fines that might have collected on the surcharge baseplate where dial indicator gauge readings will be taken. Obtain dial indicator gauge readings to the nearest 0.001 inch on opposite sides (left and right) of the surcharge baseplate by alternately placing the dial indicator assembly in each of the guide brackets on the unit weight measure. The dial indicator assembly should be placed such that the matchmarks on the guide brackets and assembly are aligned. Record the dial readings as shown on figure 7 or 8.

13.3.11 Remove the surcharge baseplate from the measure, and detach the measure from the vibratory table. During this step, prevent (as much as possible) any fines that have collected on top of the surcharge baseplate and the rim of the measure from entering the measure. If the mass of these fines is greater than about 0.2 percent of the total mass of the specimen, determine this mass and note it on the data form.

13.3.12 Determine and record the mass of the measure and soil to the nearest 0.01 lbm.

13.3.13 Record the specimen height at zero dial, and the volume per unit height (determined in accordance with USBR 1010).

13.3.14 Calculate and record the average dial reading to the nearest 0.001 inch.

13.3.15 Calculate and record the specimen height to the nearest 0.001 inch.

13.3.16 Calculate and record the specimen volume to 0.0001 ft^3 for the 0.1-ft^3 measure, or 0.001 ft^3 for the 0.5-ft^3 measure.

13.3.17 Calculate and record the mass of dry soil to the nearest 0.01 lbm.

13.3.18 Calculate the dry density of the soil to the nearest 0.1 lbm/ft^3.

13.3.19 Convert the value of dry density obtained in subparagraph 13.3.18 to dry unit weight by changing lbm/ft^3 to lbf/ft^3 (assume 1 lbm = 1 lbf) and record the value to the nearest 0.1 lbf/ft^3.

13.4 *Wet Method*:

13.4.1 Attach the measure to the vibrating table.

13.4.2 Thoroughly mix the conditioned specimen to ensure an even distribution of particle sizes and moisture content.

13.4.3 With the vibrating table turned on and at low amplitude, slowly fill the unit weight measure with wet soil using a scoop. After each increment of soil is added, ensure that a small amount of free water has accumulated on the soil surface (see note 4), if not, add sufficient water by squeezing from a sponge, pouring from a small container, or by other means. During this filling process, which should take 5 to 6 minutes, the amplitude of vibration must be adjusted to prevent excessive boiling and fluffing of the soil.

NOTE 4.–Light rodding of the soil with the scoop or other tool and/or application of the surcharge plate (with handle attached) to the soil surface will aid in migrating free water to the soil surface.

13.4.4 Fill the measure to a level about one-half inch below the top. During and just after the final minute of vibration, any water appearing above the surface of the soil should be removed using means which prevent, as much as possible, the removal of soil. A sponge, paper, or other absorbent material may be used to remove excess water. Turn the vibrating table off.

13.4.5 Assemble the surcharge baseplate, surcharge guide sleeve and mass as specified in 13.3.5 and 13.3.6.

13.4.6 Vibrate the measure assembly and specimen as specified in subparagraphs 13.3.7 and 13.3.8. After the vibration period, remove the surcharge mass and guide sleeve from the measure. Remove any free water and excess soil appearing above and around the surcharge baseplate.

13.4.7 Check the dial indicator assembly and obtain and record dial indicator gauge readings in accordance with subparagraphs 13.3.9 and 13.3.10.

13.4.8 Remove the surcharge baseplate from the measure and detach the measure from the vibrating table. Any soil particles clinging to the bottom of the surcharge baseplate must be removed and placed in the measure. Carefully wipe off all soil particles clinging to the outside surface of the measure. Dry the exterior of the measure.

13.4.9 Determine and record the mass of the measure and wet soil to the nearest 0.01 lbm.

13.4.10 Remove the wet specimen from the measure, dry the soil and determine the moisture content in accordance with subparagraph 9.3.3. Ensure that all particles clinging to the inside of the measure are removed and placed in the moisture content specimen container.

NOTE 5.–Normally the entire soil specimen is used for the moisture content determination. A representative sample meeting the requirements of USBR 5205 may be used to determine the moisture content if appropriate.

13.4.11 Record the specimen height at zero dial and the volume per unit height (as determined in accordance with USBR 1010).

13.4.12 Calculate and record the specimen volume in accordance with subparagraphs 13.3.14 through 13.3.16.

13.4.13 Calculate and record the mass of wet soil to the nearest 0.01 lbm.

13.4.14 Calculate and record the mass of dry soil to the nearest 0.01 lbm.

13.4.15 Calculate the dry density of soil to the nearest 0.1 lbm/ft³.

13.4.16 Convert the value of dry density obtained in subparagraph 13.4.15 to dry unit weight by changing lbm/ft³ to lbf/ft³ (assume 1 lbm = 1 lbf) and record the value to the nearest 0.1 lbf/ft³.

13.5 Select and record the appropriate value of dry unit weight determined in either 13.3.19 or 13.4.16 as the "maximum index unit weight." If required, convert and record the dry unit weight to the nearest 0.02 kN/m³.

14. Calculations

14.1 The following symbols are used in the calculations for this procedure.

R_{ave} = average dial reading, in
h_o = specimen height at zero dial (from USBR 1010), in
h_s = specimen height, in
V_c = volume per unit height (from USBR 1010), ft³/in
V_s = specimen volume, ft³
m_1 = mass of measure and soil, lbm
m_2 = mass of measure, lbm
m_s = mass of soil (wet or dry), lbm
m_d = mass of dry soil, lbm
w = moisture content, %
ρ = dry density, lbm/ft³
γ_d = dry unit weight, lbf/ft³

14.2 Calculate the specimen height.

$$h_s = h_o + R_{ave} \quad (1)$$

14.3 Calculate the specimen volume.

$$V_s = V_c\, h_s \quad (2)$$

14.4 Calculate the specimen mass (wet or dry).

$$m_s = m_1 - m_2 \quad (3)$$

14.5 Calculate the mass of the dry soil.

$$m_d = m_s, \text{ dry method} \quad (4)$$

$$m_d = \frac{m_s}{1 + \left(\frac{w}{100}\right)}, \text{ wet method} \quad (5)$$

14.6 Calculate the dry density of the soil.

$$\rho_d = \frac{m_d}{V_s} \quad (6)$$

14.7 In the procedure, the value of dry unit weight is determined. To convert dry density in lbm/ft³ to dry unit weight in lbf/ft³ assume 1 lbm = 1 lbf.

$$\gamma_d = \rho_d, \text{ in-lb units} \quad (7)$$

14.7.1 Convert dry unit weight in in-lb units to SI units if required.

$$\text{Unit weight, kN/m}^3 = \frac{0.1571 \text{ kN/m}^3}{\text{lbf/ft}^3} \times (\text{unit weight, lbf/ft}^3) \quad (8)$$

15. Report

15.1 The report is to consist of a completed and checked "Relative Density Determination" form, Maximum Index Unit Weight Determination section (fig. 7 or 8).

15.2 All calculations are to show a checkmark.

16. Background Reference

Evaluation of Relative Density and its Role in Geotechnical Projects Involving Cohesionless Soils, E. T. Selig and R. S. Ladd, eds., ASTM STP 523, American Society for Testing Materials, Philadelphia, PA, 1973.

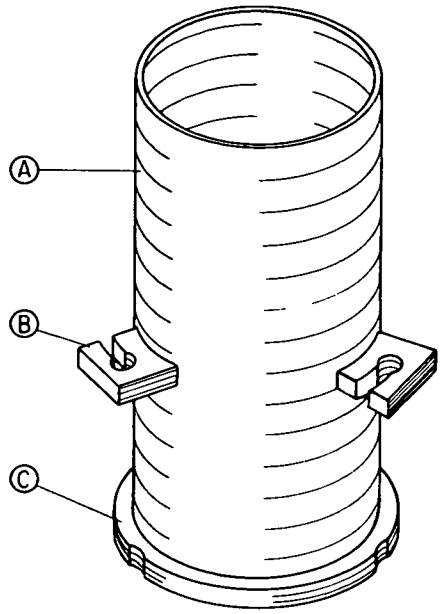

NOTE

Sleeve material: Round mechanical tubing - Carbon Steel, Tabs and ring - Mild steel.

Dimensions are in inches unless otherwise noted.

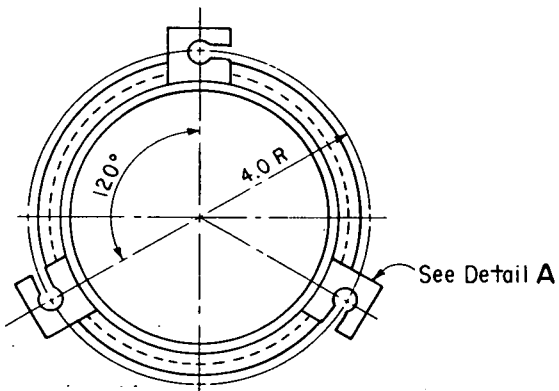

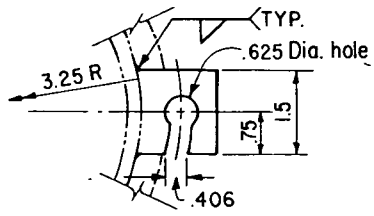

DETAIL A
HOLD DOWN TAB
PART B
3 REQUIRED(EQUALLY SPACED)

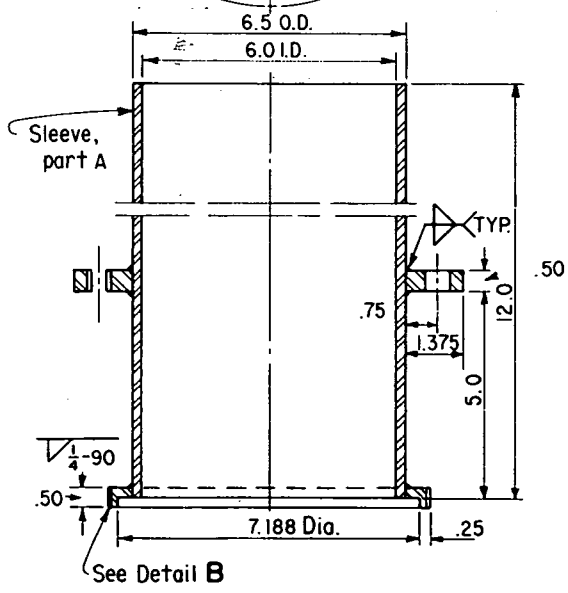

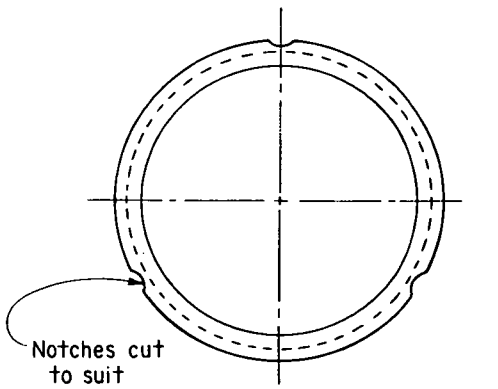

DETAIL B
ALIGNMENT RING
PART C, ONE REQUIRED

Figure 3. - Surcharge guide sleeve for 0.10 ft³ (2831 cm³) measure.

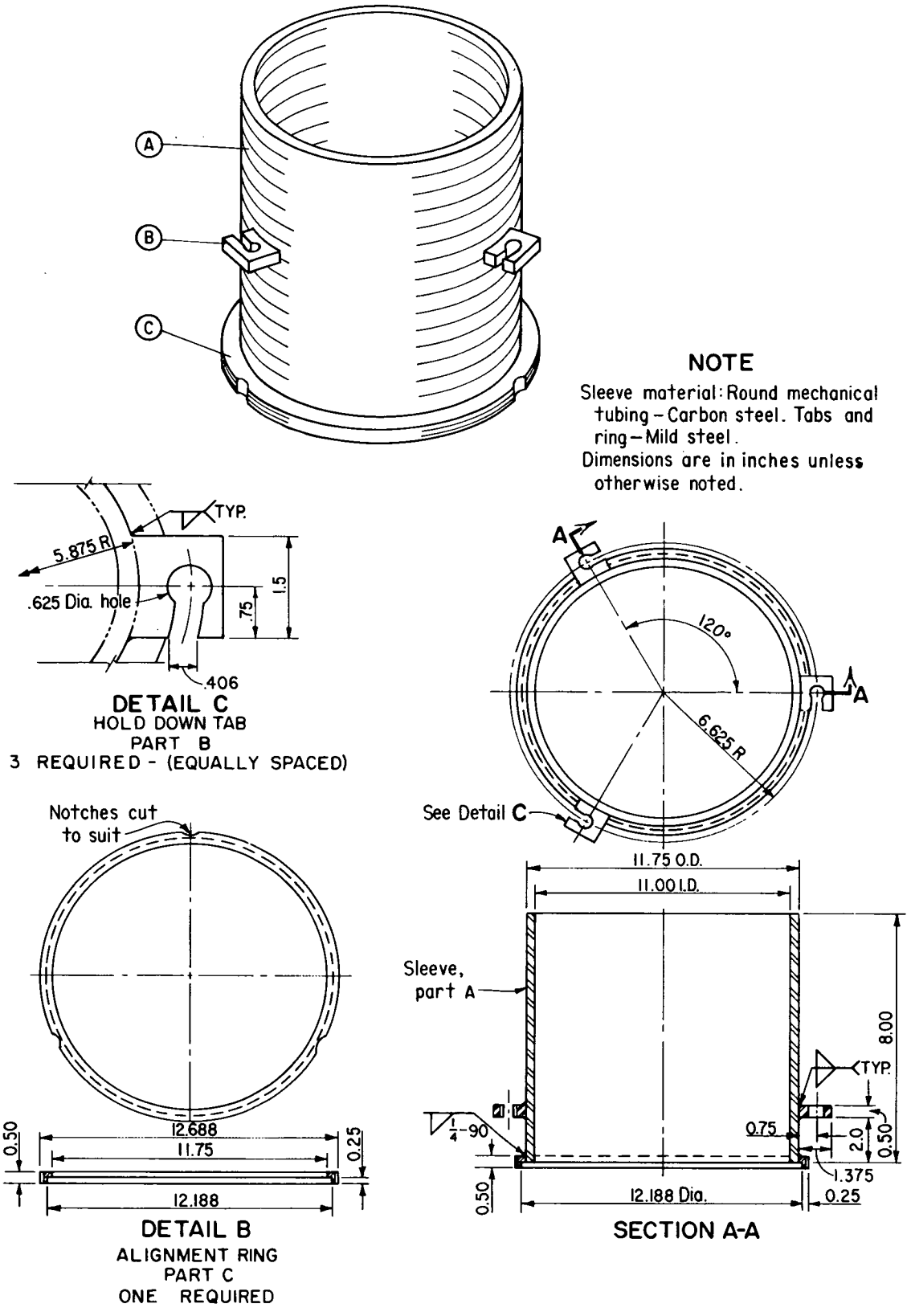

Figure 4. – Surcharge guide sleeve for 0.5 ft³ (14 158 cm³) measure.

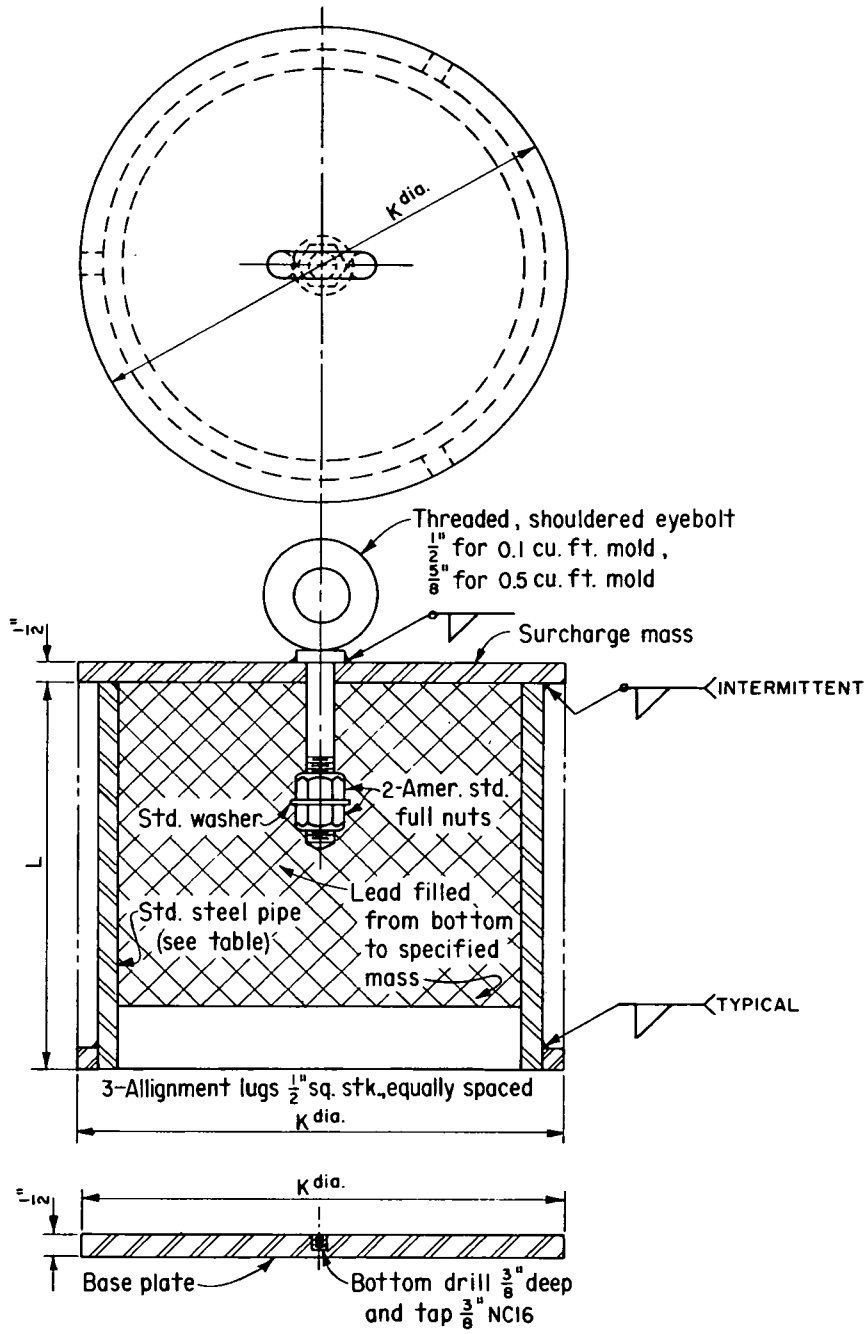

MOLD SIZE $ft^3(cm^3)$	DIMENSIONS IN (mm)			MASS POUNDS (kg)
	K	L	STD. PIPE	TOTAL MASS REQUIRED
0.1 (2831)	5.969 (152)	9(229)	4 (102)	57±0.5 (25.9±0.23)
0.5 (14 158)	10.938 (278)	6(152)	10 (254)	190±1.0 (86.2±0.45)

NOTE

Dimensions are in inches unless otherwise noted.

Figure 5. – Surcharge mass and baseplate.

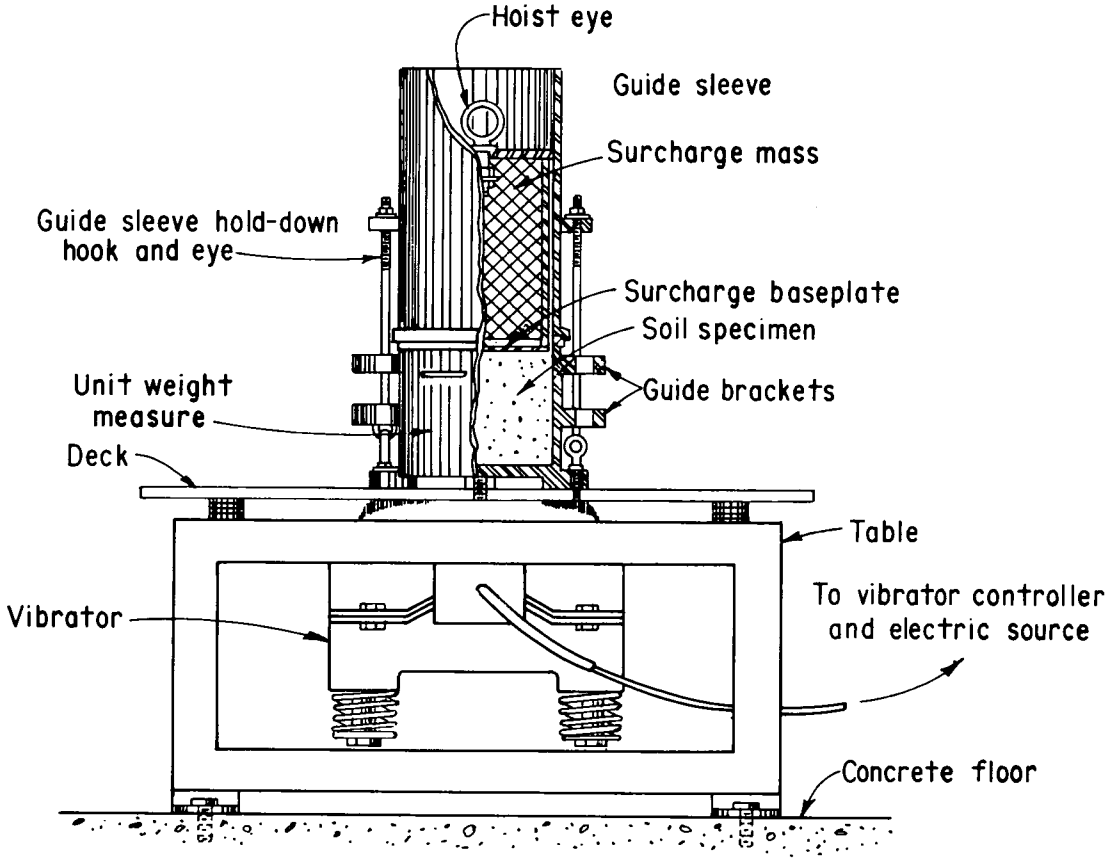

Figure 6. – Schematic of maximum index unit weight test equipment (sheet 1 of 4).

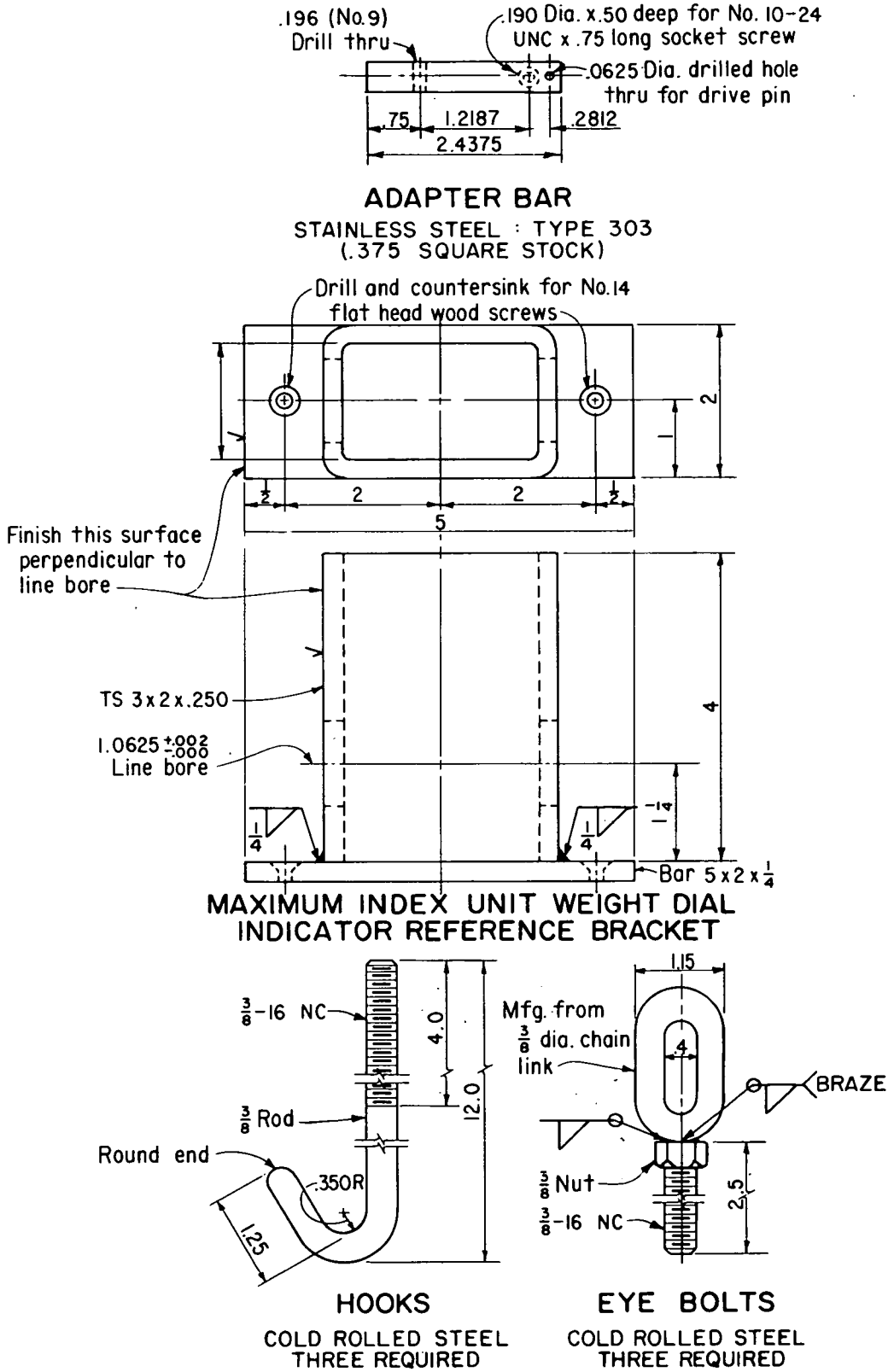

Figure 6. – Maximum index unit weight test equipment (sheet 2 of 4).

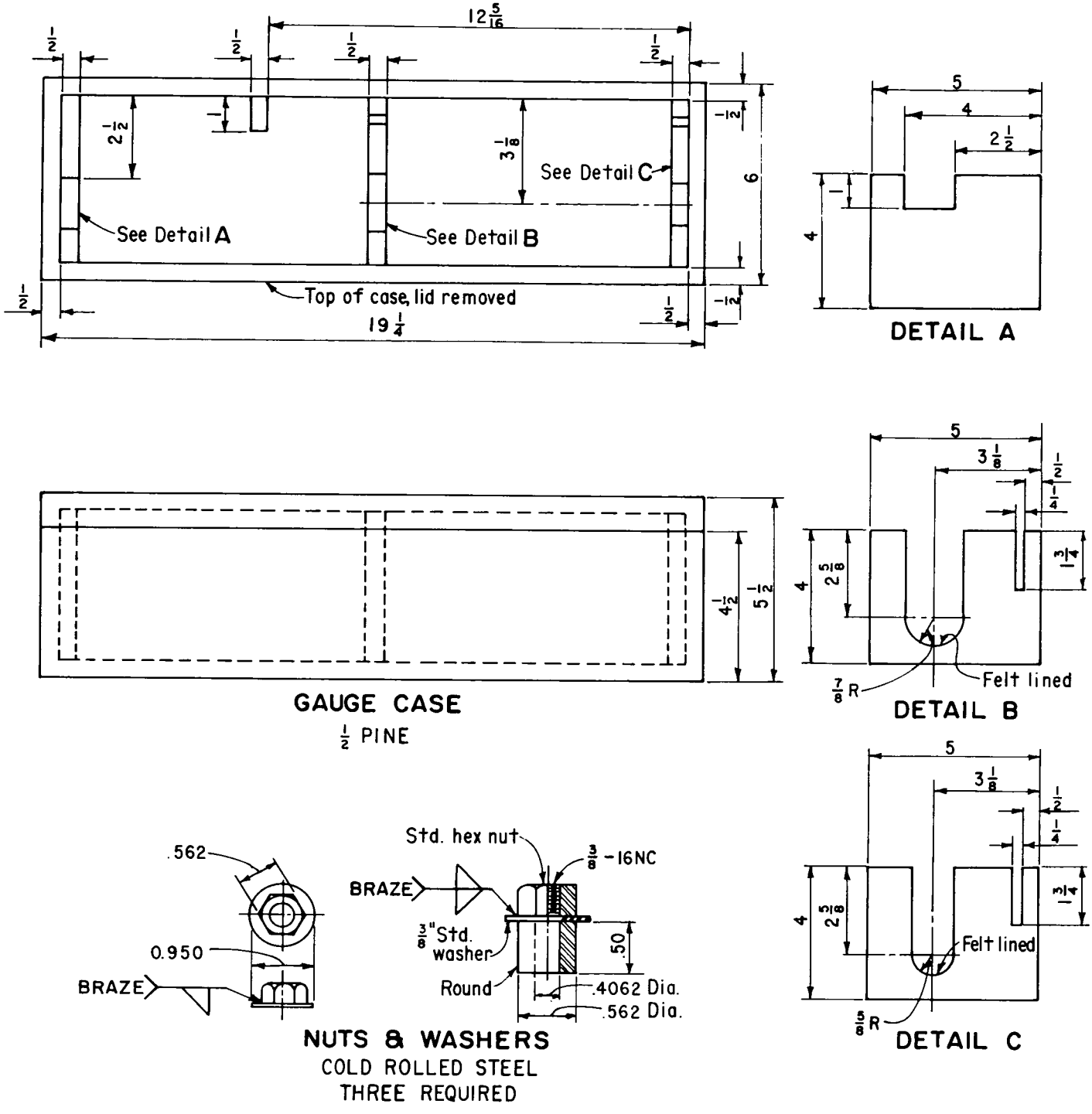

Figure 6. – Maximum index unit weight test equipment (sheet 3 of 4).

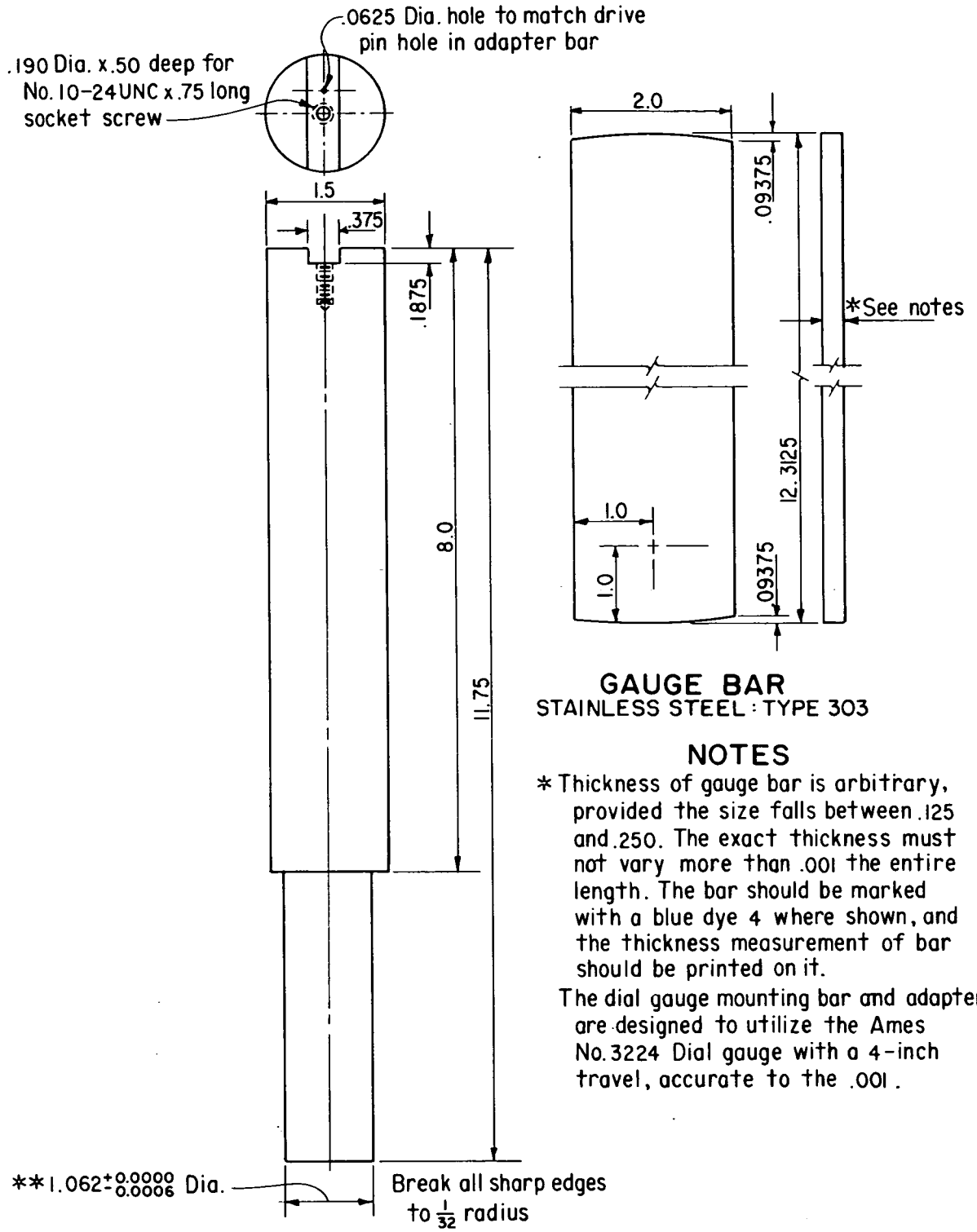

DIAL GAUGE MOUNTING SHAFT

STAINLESS STEEL : TYPE 303

** Shaft must slide fit into Unit Weight Measure

GAUGE BAR

STAINLESS STEEL : TYPE 303

NOTES

* Thickness of gauge bar is arbitrary, provided the size falls between .125 and .250. The exact thickness must not vary more than .001 the entire length. The bar should be marked with a blue dye 4 where shown, and the thickness measurement of bar should be printed on it.

The dial gauge mounting bar and adapter are designed to utilize the Ames No. 3224 Dial gauge with a 4-inch travel, accurate to the .001.

Figure 6. - Maximum index unit weight test equipment (sheet 4 of 4).

7-1709A (8-86)
Bureau of Reclamation

RELATIVE DENSITY DETERMINATION

Designation USBR 5525-__
Designation USBR 5530-89
Designation USBR 7250-__

SAMPLE NO.	PROJECT	FEATURE
1	Example	Example

% GRAVEL	% SAND	% FINES	MAX. PARTICLE SIZE	NOMINAL VOLUME OF MEASURE
——	97	3	No.4	[X] 0.1 ft³ [ ] 0.5 ft³

TESTED BY	DATE	COMPUTED BY	DATE	CHECKED BY	DATE

MINIMUM INDEX UNIT WEIGHT DETERMINATION (USBR 5525)

Measure No.				
Specimen No.				
(1) Mass of soil + measure	(lbm)			
(2) Mass of measure	(lbm)			
(3) Volume of measure*	(ft^3)			
(4) Mass of soil (1)-(2)	(lbm)			
(5) Dry unit weight** (4)/(3)	(lbf/ft^3)			
(6) Minimum index unit weight	(lbf/ft^3)			
(7) Minimum index unit weight = (6) x 0.1571***	(kN/m^3)			

PLACEMENT DEVICE USED
1/2-inch spout [ ] 1-inch spout [ ] Scoop [ ]

MOISTURE CONTENT DETERMINATION

(16) Container No.			
(17) Mass of container + wet soil	lbm		
(18) Mass of container + dry soil	lbm		
(19) Mass of container	lbm		
(20) Mass of water = (17) - (18)	lbm		
(21) Mass of dry soil = (18) - (19)	lbm		
(22) Moisture content = [(20)/(21)] x 100	%		

MAXIMUM INDEX UNIT WEIGHT DETERMINATION (USBR 5530)

			DRY METHOD	WET METHOD
Specimen No.			1	
(1) Left dial reading	in		0.598	
(2) Right dial reading	in		0.630	
(3) Average dial reading	in		0.614	
(4) Specimen height at zero dial*	in		4.145	
(5) Specimen height = (3) + (4)	in		4.759	
(6) Volume per unit height*	ft^3/in		0.01652	
(7) Specimen volume = (5) x (6)	ft^3		0.0786	
(8) Mass of measure + soil	lbm		16.35	
(9) Mass of measure	lbm		7.45	
(10) Mass of dry soil = (8) - (9) [dry method]	lbm		8.90	
(11) Mass of wet soil = (8) - (9) [wet method]	lbm			
(12) Mass of dry soil = (11)/[1+((22)/100)]	lbm			
(13) Dry unit weight** = (10)/(7) or (12)/(7)	lbf/ft^3		113.2	
(14) Maximum index unit weight	(lbf/ft^3)			
(15) Maximum index unit weight (14) x 0.1571***	(kN/m^3)			

REMARKS: _____

PERCENT RELATIVE DENSITY (USBR 7250 METHOD A)

(1) In-place unit weight minus 3-inch (75 mm)		
(2) Maximum index unit weight USBR 5530 (14) or (15)		
(3) Minimum index unit weight USBR 5525 (6) or (7)		
(4) (2) x [(1) - (3)]		
(5) (1) x [(2) - (3)]		
(6) Percent Relative Density = [(4)/(5)] x 100		

*Values obtained from Designation USBR 1010
**Implies 1 lbm = 1 lbf
***0.1571 converts lbf/ft^3 to kN/m^3

AUXILIARY TESTS
USBR 5300-89
USBR 1010-89
IN PLACE UNIT WEIGHT
PERFORMED IN ACCORDANCE
WITH USBR _____

GPO 852 - 163

Figure 7. – Relative density determination (dry method) — example.

7-1709A (8-86)
Bureau of Reclamation

RELATIVE DENSITY DETERMINATION

Designation USBR 5525-__
Designation USBR 5530-89
Designation USBR 7250-__

SAMPLE NO.	PROJECT	FEATURE
1	Example	Example

% GRAVEL	% SAND	% FINES	MAX. PARTICLE SIZE	NOMINAL VOLUME OF MEASURE
—	97	3	No.4	[X] 0.1 ft³ [ ] 0.5 ft³

TESTED BY	DATE	COMPUTED BY	DATE	CHECKED BY	DATE

MINIMUM INDEX UNIT WEIGHT DETERMINATION (USBR 5525)

Measure No.				
Specimen No.				
(1) Mass of soil + measure	(lbm)			
(2) Mass of measure	(lbm)			
(3) Volume of measure*	(ft^3)			
(4) Mass of soil (1)-(2)	(lbm)			
(5) Dry unit weight** (4)/(3)	(lbf/ft^3)			

(6) Minimum index unit weight (lbf/ft^3) _____

(7) Minimum index unit weight = (6) x 0.1571*** (kN/m^3) _____

PLACEMENT DEVICE USED
1/2-inch spout [ ] 1-inch spout [ ] Scoop [ ]

MOISTURE CONTENT DETERMINATION

(16) Container No.			3
(17) Mass of container + wet soil	lbm		13.65
(18) Mass of container + dry soil	lbm		12.57
(19) Mass of container	lbm		2.95
(20) Mass of water = (17) - (18)	lbm		1.08
(21) Mass of dry soil = (18) - (19)	lbm		9.62
(22) Moisture content = [(20)/(21)] x 100	%		11.2

MAXIMUM INDEX UNIT WEIGHT DETERMINATION (USBR 5530)

		DRY METHOD	WET METHOD
Specimen No.			2
(1) Left dial reading	in		0.844
(2) Right dial reading	in		0.804
(3) Average dial reading	in		0.824
(4) Specimen height at zero dial*	in		4.145
(5) Specimen height = (3) + (4)	in		4.969
(6) Volume per unit height*	ft^3/in		0.01652
(7) Specimen volume = (5) x (6)	ft^3		0.0821
(8) Mass of measure + soil	lbm		18.16
(9) Mass of measure	lbm		7.45
(10) Mass of dry soil = (8) - (9) [dry method]	lbm		
(11) Mass of wet soil = (8) - (9) [wet method]	lbm		10.71
(12) Mass of dry soil = (11)/[1+((22)/100)]	lbm		9.63
(13) Dry unit weight** = (10)/(7) or (12)/(7)	lbf/ft^3		117.3

(14) Maximum index unit weight (lbf/ft^3) _____

(15) Maximum index unit weight (14) x 0.1571*** = (kN/m^3) _____

REMARKS: _____

PERCENT RELATIVE DENSITY (USBR 7250 METHOD A)

(1) In-place unit weight minus 3-inch (75 mm)	
(2) Maximum index unit weight USBR 5530 (14) or (15)	
(3) Minimum index unit weight USBR 5525 (6) or (7)	
(4) (2) x [(1) - (3)]	
(5) (1) x [(2) - (3)]	
(6) Percent Relative Density = [(4)/(5)] x 100	

*Values obtained from Designation USBR 1010
**Implies 1 lbm = 1 lbf
***0.1571 converts lbf/ft^3 to kN/m^3

AUXILIARY TESTS
USBR 5300-89
USBR 1010-89
IN PLACE UNIT WEIGHT
PERFORMED IN ACCORDANCE
WITH USBR _____

GPO 852 - 183

Figure 8. - Relative density determination (wet method) — example.

UNITED STATES DEPARTMENT OF THE INTERIOR
BUREAU OF RECLAMATION

USBR 5600-89

PROCEDURE FOR

DETERMINING PERMEABILITY AND SETTLEMENT OF SOILS [8-IN (203-MM) DIAMETER CYLINDER]

INTRODUCTION

This procedure is under the jurisdiction of the Geotechnical Services Branch, code D-3760, Research and Laboratory Services Division, Denver Office, Denver, Colorado. The procedure is issued under the fixed designation USBR 5600. The number immediately following the designation indicates the year of acceptance or the year of last revision.

1. Scope

1.1 This designation outlines the procedure for determining the permeability and settlement of soils. Soil passing the No. 4 (4.75 mm) sieve is placed and tested in an 8-inch i.d. (inside-diameter) cylinder. The coefficient of permeability and amount of settlement of the specimen, when loaded, are determined.

1.2 The permeability test specimens may be prepared from compacted cohesive or cohesionless soils or undisturbed cohesive soil samples.

1.3 A procedure also is described in which the coefficient of permeability is determined for specimens subjected to zero load.

2. Auxiliary Tests

2.1 A test sample must be obtained in accordance with USBR 5205 prior to performing this procedure. The moisture content must be determined in accordance with USBR 5300 as a part of performing this procedure.

3. Applicable Documents

3.1 *USBR Procedures*:
USBR 1007 Calibrating Dial Indicators
USBR 1012 Calibrating Balances or Scales
USBR 1020 Calibrating Ovens
USBR 1420 Calibrating Head Tanks
USBR 1425 Calibrating Permeability Test Equipment
USBR 1430 Calibrating the Loading Device for Permeability Tests
USBR 3900 Standard Definitions of Terms and Symbols Relating to Soil Mechanics
USBR 5205 Preparing Soil Samples by Splitting or Quartering
USBR 5300 Determining Moisture Content of Soil and Rock by the Oven Method
USBR 5500 Performing Laboratory Compaction of Soils — 5.5-lbm Rammer and 18-in Drop
USBR 5505 Determining Moisture Content–Penetration Resistance Relationships of Fine Grained Soils
USBR 5525 Determining the Minimum Index Unit Weight of Cohesionless Soils
USBR 5530 Determining the Maximum Index Unit Weight of Cohesionless Soils
USBR 5610 Determining Permeability of Soils by the Back Pressure Test Method
USBR 5615 Performing Radial Vacuum Permeability Test for Soil–Cement or Porous Rock
USBR 5700 Determining the One-Dimensional Consolidation Properties of Soil (Incremental Stress)
USBR 7250 Determination of Percent Relative Density
USBR 7305 Field Permeability Test (Shallow Well Permeameter Method)

3.2 *ASTM Standard*:
D 2434 Standard Test Method for Permeability of Granular Soils (Constant Head).

4. Summary of Method

4.1 A 3-inch thick soil specimen is placed in an 8-inch i.d. permeability cylinder. An appropriate load is selected and the required pressure applied to the specimen. Water is permeated through the specimen until it is thoroughly wetted. Water, under selected hydraulic gradients, is applied to the specimen and flow rates are measured periodically until they stabilize. For a specimen tested under an applied normal pressure, settlement measurements are also periodically obtained. The coefficient of permeability is calculated from the flow rate, specimen dimensions, and the applied hydraulic gradient.

5. Significance and Use

5.1 The permeability and settlement characteristics of soils can have a significant effect on many construction project operations.

5.2 Seepage problems typically encountered in civil engineering deal with the flow of water through undisturbed or compacted soil.

5.3 Primary use of the permeability test, in which a normal pressure is applied to the test specimen, is for embankment construction where overburden pressure can be simulated by selection of an appropriate normal load. The permeability test at zero pressure was developed to obtain an approximate permeability coefficient of soil proposed for canal linings or other near ground-surface

applications not subject to significant normal pressures (see subpar. 9.2.5).

6. Terminology

6.1 Definitions are in accordance with USBR 3900. Terms of particular significance are:

6.1.1 *Permeability.*–The capacity of a rock or soil to conduct liquid or gas.

6.1.2 *Coefficient of Permeability* (*k*).–The rate of discharge of water under laminar flow conditions through a unit cross-sectional area of a porous medium under a unit hydraulic gradient and standard temperature conditions (usually 20 °C) (ASTM definition).

6.1.3 *Hydraulic Gradient* (*i*).–The loss of hydraulic head per unit distance of flow, $\Delta H/\Delta L$ (ASTM).

6.1.4 *Piping.*–The progressive removal of soil particles from a mass by percolating water leading to the development of channels (ASTM).

6.1.5 *Cohesionless Soil.*–A soil that, when unconfined, has little or no strength when air-dried and that has little or no cohesion when submerged (ASTM).

6.1.6 *Cohesive Soil.*–A soil that, when unconfined, has considerable strength when air-dried and that has significant cohesion when submerged (ASTM).

6.1.7 *Laminar Flow.*–Flow in which the head loss is proportional to the first power of the velocity (ASTM).

6.2 Terms not included in USBR 3900 specific to this designation are:

6.2.1 *Head.*–Pressure at a point in a liquid, expressed in terms of the vertical distance of the point below the surface of the liquid (ASTM).

6.2.2 *Viscosity.*–The property of a fluid to resist flow under an applied force.

7. Apparatus

7.1 *General Apparatus*:

7.1.1 *Cans.*–Sample storage cans, round with cover, 6-inches diameter by 12-inches high (150-mm dia. by 300-mm high).

7.1.2 *Clamps.*–Rubber hose clamps for 3/8-inch (10-mm) rubber tubing as described in subparagraph 7.1.9.

7.1.3 *Mixing Pans.*–Metal mixing pans, about 16- by 16- by 2-inches (400- by 200- by 50-mm).

7.1.4 *Balances or Scales.*–Typical balances or scales used for this designation are:

Application	*Readable to*	*Approximate capacity*
Moisture content	0.1 g	1000 g
Mass of permeability specimen	0.01 lbm	50 lbm

7.1.5 *Scoops.*–Small or large hand scoop.

7.1.6 *Combination Square.*–A 12-inch (305-mm) combination square.

7.1.7 *Metal Straightedge.*–A 15-inch (380-mm) metal straightedge.

7.1.8 *Connectors.*–T-connectors of 3/16-inch (5-mm) bore for 3/8-inch-i.d. (10-mm) hose.

7.1.9 *Tubing.*–About 50 feet (30 m) of 3/8-inch (10-mm) i.d., thick wall plastic or rubber tubing.

7.1.10 *Hose Clamps.*–Twelve hose clamps for 3/8-inch (10-mm) tubing.

7.2 *Equipment Unique to This Procedure*:

7.2.1 *Permeability Cylinder and Accessories for Specimens Subject to Normal Pressures* (figs. 1 and 2).–Steel (fig. X1.1) or aluminum (fig. X1.2) 8-inch-i.d. permeability cylinder, including piston with gauge arms and attached porous disk, bottom and top load plates, load spring, tension rods, and dial gauge supports.

7.2.2 *Permeability Cylinder for Specimens at Zero Normal Pressure* (fig. 3).–Plastic (fig. X1.3) or aluminum 8-inch-i.d. permeability cylinder for permeability tests performed under zero load.

7.2.3 *Porous Disks.*–Coarse grade carborundum porous disks, 7-15/16-inch-diameter by 1-inch thick (202 by 25-mm).

7.2.4 *Dial Gauges With Holders.*–Dial gauges with holders for 8-inch-i.d. permeability cylinder, continuous dial, 0.001-inch (0.025-mm) graduations, 1.00-inch (25-mm) travel, set of two.

7.2.5 *Calibration Ring.*–Metal calibration ring 4 to 7 inches (100 to 180 mm) outside diameter by 3.000-inch (76.20-mm) high, made from metal pipe or tubing.

7.2.6 *Dial Gauge Reference Bracket* (fig. X1.4).–Dial gauge reference bracket for 8-inch i.d. permeability cylinders.

7.2.7 *Loading System.*–Hydraulic loading device, equivalent to Porto-Power pump model No. P-85, fitted with a 10,000-lbf (45-kN) capacity gauge and including flexible hose with quick-connect couplings for connecting to ram and a 3/4-inch (20-mm) diameter steel ball. One ram equal to Porto-Power Ram No. RC-159 having a capacity of 7-ton (62-kN) force is required.

7.2.8 *Load Spring.*–Coiled steel loading spring meeting the following USBR designation requirements:

Steel coil spring No.	Coil o.d. ±1/4 in (±5 mm) in	mm	Free height, ±1/4 in (±5 mm) in	mm	Staticload at deflections of 2-1/4 in ±1/4 in (65 mm ±5 mm) lbf	kN
2	4	100	10	255	1,200	5
3	6	150	10	255	2,400	11
5	6	150	10	255	7,200	32
6	6	150	10	255	9,000	40
7	6	150	12	305	15,000	67

NOTE 1.–The spring number (a USBR designation) is to be stamped on the outside of the coil. Spring ends are to be machined or ground so that the ends are perpendicular to the axis. Springs are to have two coats of aluminum paint.

7.2.9 *Head Tank Supports.*–Adjustable head tank supports.

7.2.10 *Head Tanks.*–Glass head tanks (sets), one set each of 20-, 30-, 40-, 50-, and 60-mm-i.d. tanks. Rubber stoppers with one hole in the center, sized to fit the outside diameter of the air intake tube, including one stopper each

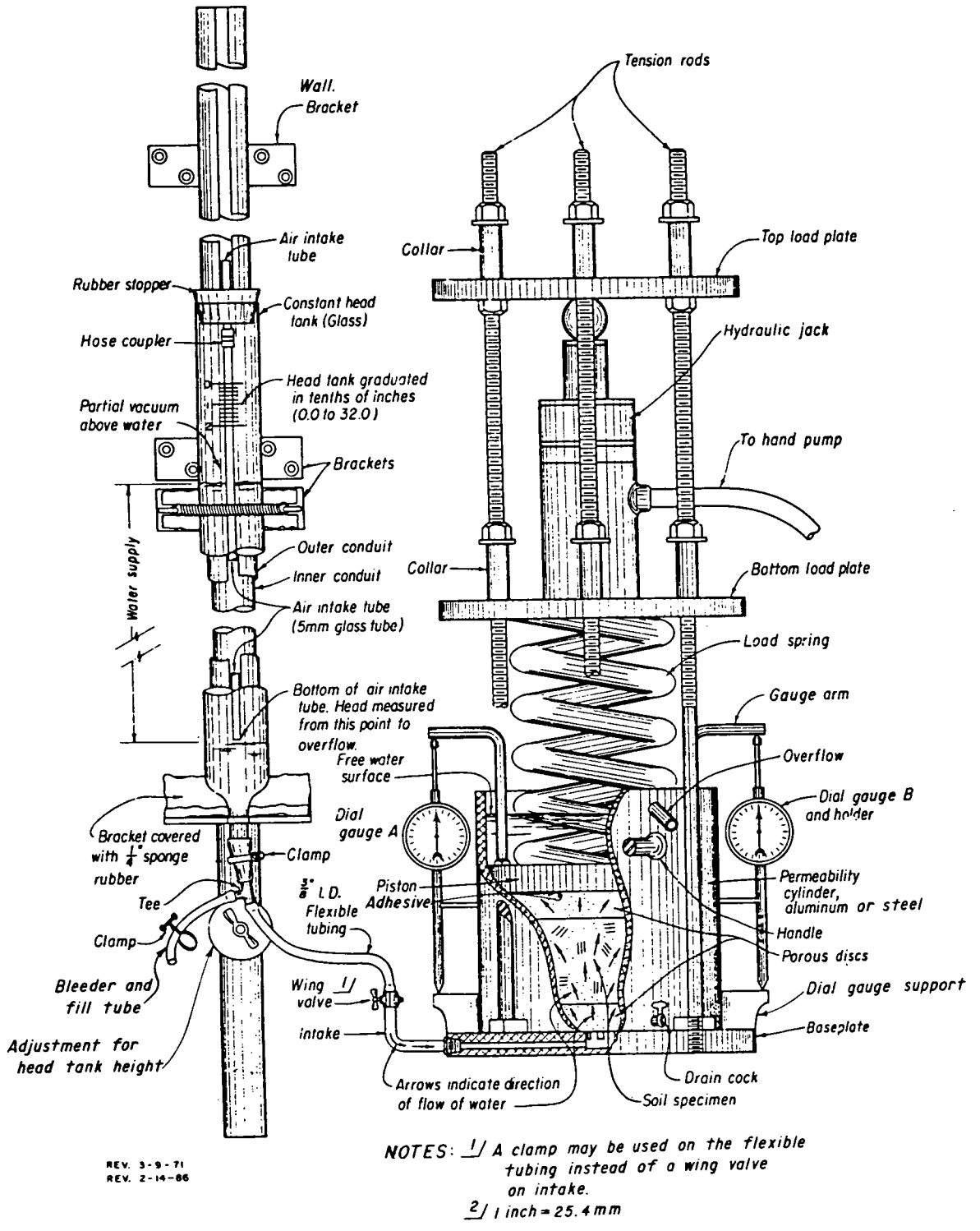

Figure 1. – An 8-inch-inside-diameter permeability apparatus for specimens subjected to normal pressures. 101-D-110

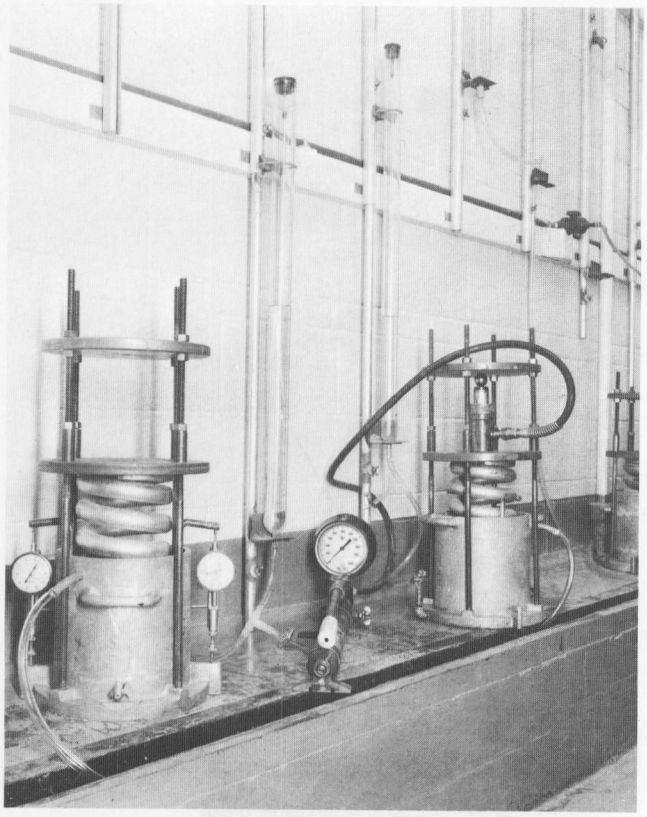

Figure 2. – An 8-inch-inside diameter permeability apparatus with hydraulic cylinder for applying normal pressure.

of sizes 2, 6, 9, 10, and 12. Head tanks are to be readable to 1 mL.

7.2.11 *Air Intake Tubes.*–Five 3-foot (900-mm) lengths of 3/16-inch-i.d. (5-mm) glass or straight, rigid plastic tubing for air intake tubes.

7.2.12 *Tamper.*–A 9-lbm (4-kg) tamper with 4-inch (100-mm) diameter face for packing permeability test specimens.

7.2.13 *Tamping Rod.*–A 3/16-diameter by 12-inch (5- by 300-mm) long rod for tamping sealant around specimens tested under zero load.

8. Reagents and Materials

8.1 Tapwater that is free of acids, alkalies, or oils and is suitable for drinking should be used for performing this procedure.

8.2 Industrial adhesive (such as solvent type, rubber-based adhesive) is required for attaching the top porous disk to the piston.

9. Precautions

9.1 *Safety Precautions*:

9.1.1 Care should be taken, when applying loads on the specimen, not to overstress the tension rods. For 4 one-half inch (13-mm) diameter rods (of mild steel) the maximum safe pressure that can be applied to the specimen is about 100 lbf/in^2.

9.1.2 The tension rods must be screwed the entire threaded length into the baseplate. Gloves should be worn to avoid cutting hands on the threads.

9.2 *Technical Precautions*:

9.2.1 It is possible that a specimen may leak or "pipe" along the side of the cylinder when the applied hydraulic gradient is too high. If this happens, stop the test, prepare another specimen, and perform the test at a lower hydraulic gradient. Sometimes piping can be detected by an excessive accumulation of soil on the top plate or a sudden increase in apparent permeability.

9.2.2 The initial hydraulic gradient for pervious soils should be as low as possible while still maintaining flow through the soil.

9.2.3 When readings cannot be taken daily (e.g., weekends or holidays), the head should be reduced so the permeability test is not interrupted. However, if the test specimen permeability is such that the head tank may drain during an unattended period, close the clamp in the line from head tank to cylinder and cover the specimen with water as noted in subparagraph 14.1.38 during the interim.

9.2.4 Care should be taken to ensure that the temperature of the water in the head tank is maintained at a temperature the same as that in the room where the test is performed—preferably at a temperature of about 5 °F (3 °C) above that of the room. If water colder than the specimen is used, air dissolved in the water comes out of solution and becomes trapped in the voids of the specimen as air bubbles; consequently, an erroneously low permeability value is obtained.

9.2.5 The equipment and procedure used in this test may not result in a completely saturated specimen. The major use of this test is for construction control and evaluation work, and for instances when an approximate permeability value is acceptable. For more exact permeabilty determinations, USBR 5610 or 5615 should be used.

9.2.6 Using the compaction technique outlined in this procedure the average unit weight of each layer placed may vary by as much as 4 percent of that desired. The permeability will essentially be governed by the layer with greatest unit weight.

9.2.7 Due to the effects of sampling, handling, proessing, and testing on some materials, results of this test may not reflect in-place conditions or the properties of the material caused by processing and placement during construction. Of particular concern are materials such as soft and/or friable decomposed granite, sandstone, shale, limetone, claystone, etc., or soils affected by air and/or oven drying. Such materials must be identified before processing and the person requesting the test should verify whether standard procedures are to be followed, whether modifications are appropriate, or whether the material should be processed and tested at all. Cautionary statements must be made on test data forms and in reporting the test data.

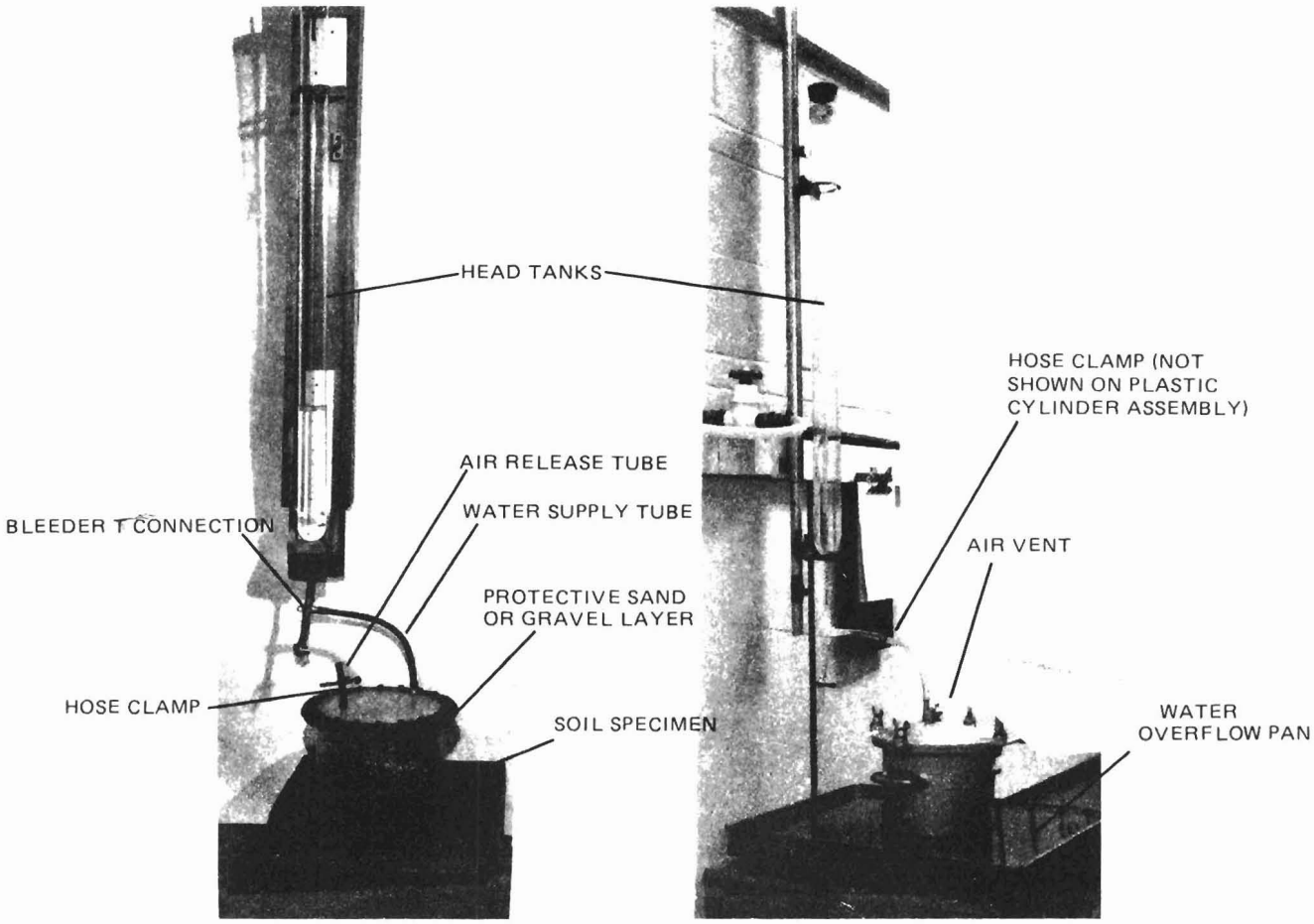

(a) Plastic cylinder. (b) Aluminum cylinder.

Figure 3. – Permeability cylinders with zero normal pressure.

10. Sampling, Test Specimens, and Test Units

10.1 Depending upon testing requirements, compacted or undisturbed specimens may be used to determine the permeability and settlement characteristics of a soil.

10.1.1 *Compacted Soil Sample.*–A 15-lbm (6.8-kg) sample is obtained from a thoroughly mixed portion of the material passing the U.S.A. Standard series No. 4 (4.75 mm) sieve and may be used for either the normally loaded or zero loaded permeability test.

10.1.2 *Undisturbed Soil Sample.*–An undisturbed specimen is trimmed to approximately 7-1/2-inch (190-mm) diameter by 3-inch (76-mm) thick and sealed in the normally loaded or zero loaded apparatus with a mixture of bentonite and sand or plaster of paris.

10.2 *Compacted Soil Specimen*:

10.2.1 Prepare the sample in accordance with USBR 5205.

10.2.2 Obtain 15-lbm (6.8-kg) of soil from a thoroughly mixed portion of the material passing the No. 4 (4.75 mm) sieve.

10.2.3 Obtain the moisture content of the soil in accordance with USBR 5300.

10.2.4 Place the soil in an airtight storage can.

10.2.5 Determine the quantity of water to add to or remove from the stored soil to obtain the specified moisture content. The form shown on figure 4 may be used.

10.2.6 Add or remove water as necessary to obtain the specified moisture content. Add water to the specimen in a pan by evenly sprinkling water over the surface and mixing thoroughly. Remove water by air-drying in a pan. After the desired amount of water has been added or removed, place the material back into the storage can and store in accordance with the following minimum standing times:

Soil classification	*Minimum standing time, hours*
SM, SW, SP	3
ML, CL, OL, SC	18
MH, CH, OH, Pt	36

10.2.7 Determine the moisture content of the soil in accordance with USBR 5300. Repeat subparagraphs 10.2.5 through 10.2.7 until the actual moisture content is within ±0.5 percent of that specified.

10.2.8 Record the desired dry unit weight and the moisture content of the soil as shown on figure 5.

7-2327 (10-85) Bureau of Reclamation	ADDED WATER DETERMINATION		Designation USBR · 5600 · 89
SAMPLE NO. Example	PROJECT	FEATURE	
COMPUTED BY	DATE	CHECKED BY	DATE

Specimen No.	Moisture Content %			Mass g				
	Initial (1)	Desired (2)	Difference (3)	Specimen and Container (4)	Container (5)	Specimen (6)	Dry Mass of Specimen (7)	Water to Add (8)
1	8.3	14.3	6.3*	7525	408.2	7117	6572	414.0
			(2) – (1)			(4) – (5)	$100\left[\frac{(6)}{100+(1)}\right]$	$(7)\left[\frac{(3)}{100}\right]$

Remarks: * Estimated evaporation loss 0.3% in Denver

Auxiliary Tests:

USBR 5300 · 89

GPO 848-762

Figure 4. – Added water determination — example.

7-2377 (10-86)
Bureau of Reclamation

COMPACTED PERMEABILITY SPECIMEN PREPARATION SHEET

Designation USBR 5600-89

SAMPLE NO.	PROJECT	FEATURE
Example		
TESTED BY DATE	COMPUTED BY DATE	CHECKED BY DATE

SPECIMEN HEIGHT (a) 3.00 in

SPECIMEN AREA (b) 50.3 in^2

SPECIMEN VOLUME (c) = [(a)x(b)]/1728* 0.0873 ft^3

NUMBER OF LAYERS (d) 3

SPECIMEN NO.	DESIRED DRY UNIT WEIGHT lbf/ft^3 (1)	MOISTURE CONTENT OBTAINED** (%) (2)	WET UNIT WEIGHT = [(1)x{1+(2)/100}] lbf/ft^3 (3)	WET MASS REQUIRED = (3) x (c) lbm*** (4)	WET MASS OF EACH LAYER = (4)/(d) lbm (5)
1	113.3	14.5	129.7	11.3	3.77

REMARKS: Moisture content desired is 14.3%

AUXILIARY TEST
USBR 5300-89

*1728, constant to convert in^3 to ft^3
**Must be within 0.5% of that specified
***Implies lbm = lbf

GPO 852-306

Figure 5. – Compacted permeability specimen preparation sheet — example.

NOTE 2.–For cohesive soils, to simulate particular field placement conditions, the specimen is generally placed at a specified percentage of the maximum unit weight and optimum moisture content as determined by USBR 5500. For cohesionless soils, the specimen is placed at a specified relative density as determined in accordance with USBR 5525 and 5530 and calculated in accordance with USBR 7250.

10.3 *Undisturbed Soil Specimen.*–See subparagraph 14.1.11 for placement of an undisturbed test specimen.

10.4 *Zero-Loaded Soil Specimens*:

10.4.1 Compact or trim a specimen as described in subparagraph 10.2 or 10.3, whichever is appropriate.

10.4.2 Place the specimen in a cylinder (see subpar. 7.2.2 and fig. 3) on a wetted porous disk. (See subpar. 14.1.1 through 14.1.4.) If an undisturbed specimen is being placed, seal the specimen in accordance with subparagraph 14.1.11.3.

10.4.3 Place a 1 to 4 inch thick (25 to 102 mm) protective layer of uniformly graded coarse sand or pea gravel on the specimen to help prevent soil surface erosion when water is added.

10.4.4 Close the clamp on the water supply tube extending from the head tank to the permeability cylinder.

11. Preparation of Apparatus

11.1 *Permeability Apparatus for Specimens Tested Under an Applied Normal Pressure*:

11.1.1 Refer to figure 1 to correctly assemble the permeability apparatus.

11.1.2 Select the size of head tank based on the anticipated permeability of the specimen. The tank size should be such that a full tank of water will flow through the specimen in about a 24-hour period under the hydraulic gradient selected for the test. Record the *Head tank No.* and the *Calibration factor F*, cm^3/in for the head tank selected as determined by USBR 1420 as shown on figure 6.

11.1.3 Clean the head tank to remove any impurities that may clog lines and restrict free waterflow.

11.1.4 Check the tubing for leakage and/or restrictions and clean, or replace, if necessary.

11.1.5 Clean the air intake tube to ensure unrestricted flow.

11.1.6 Ensure that the drain cock at the bottom of the permeability cylinder is open.

11.2 *Permeability Apparatus for Specimens Under Zero Normal Pressure*:

11.2.1 Refer to figure 3 to correctly assemble the permeability apparatus.

11.2.2 For selecting the head tank, and cleaning and checking the tubing, follow subparagraphs 11.1.2 through 11.1.5.

12. Calibration and Standardization

12.1 Verify that equipment is currently calibrated in accordance with the applicable calibration procedure. If the calibration is not current, perform the calibration before using the equipment for this procedure.

USBR 1007 Calibrating Dial Indicators
USBR 1012 Calibrating Balances or Scales
USBR 1020 Calibrating Ovens
USBR 1420 Calibrating Head Tanks
USBR 1425 Calibrating Permeability Test Equipment
USBR 1430 Calibrating the Loading Device for Permeability Tests

13. Conditioning

13.1 Because of the sensitivity of the coefficient of permeability to the properties of the soil and the liquid, it is important that the area where the permeability testing is performed not be subject to significant temperature changes during the duration of the test.

14. Procedure

14.1 *Test With an Applied Normal Pressure*:

14.1.1 Place the bottom porous disk and top porous disk with attached piston into a pan of water and soak them for a minimum of 30 minutes.

14.1.2 Remove the disks and allow free water to drain for 10 to 15 minutes.

14.1.3 Place the bottom porous disk in the permeability cylinder.

14.1.4 Carefully center the 3-inch-high (76-mm) calibration ring on the bottom porous disk.

14.1.5 Place the upper disk and piston over the calibration ring so that the gauge arms are directly above the dial gauge supports. The positions of the piston and cylinder are matchmarked so they may be identically reassembled.

14.1.6 Place the load spring on top of the piston to hold it firmly in place.

14.1.7 Place dial gauges A and B (see fig. 1) in the dial gauge reference bracket (see fig. X1.4) and record the gauge reading as shown on figure 7. Throughout the test, check the dial gauges—as necessary—in the dial gauge reference bracket to ensure that the initial dial gauge readings have not changed. Readjust the gauges to the initial readings if necessary.

14.1.8 Position the dial gauges as shown on figure 1; read the gauges and record as *ring* readings in the *Settlement Data* section as shown in column (3) on figure 7. The sum and average of these two gauge readings (A and B) are recorded as *Dial reading A + B, w/ring, Total, in* and *1/2 Total, in,* respectively, in the *Placement Data* section.

14.1.9 Remove the dial gauges, load spring, piston, top porous disk, and calibration ring.

14.1.10 *Compacted Specimen Preparation*:

14.1.10.1 Determine and record the wet mass of soil needed for each 1-inch (25.4-mm) layer as shown in column (5) on figure 5.

14.1.10.2 Place into the cylinder the amount of soil calculated for the first of three 1-inch (25.4-mm) layers.

14.1.10.3 Carefully level the soil while it is in a loose state.

7-2378 (12-86)
Bureau of Reclamation

PERMEABILITY-SETTLEMENT TEST DATA SHEET 1

Designation USBR 5600 - 89

SAMPLE NO.	PROJECT	FEATURE
Example		
TESTED BY / DATE	COMPUTED BY / DATE	CHECKED BY / DATE

CYLINDER NO. 15-8 inch diameter

TIME INSTALLED		HEAD TANK		HEAD-(H_{wc}) (SEE REMARKS COLUMN) (ft)	CONSOLIDATED THICKNESS - (L') (DATA SHEET NO. 2) (in)	CONSTANT $C = 0.0738 \frac{L'}{H_{wc}}$ 1/ $C = 0.013 \frac{L'}{H_{wc}}$ 2/	CONSTANT CF
DATE 19—	HOUR	NO.	CALIBRATION FACTOR (F) (cm^3/in)				
9-10	8:24	613	60.6	5.00	2.956	0.044	2.67
9-13	8:24	613	60.6	1.67	2.956	0.131	7.94
9-16	8:00	613	60.6	5.00	2.956	0.044	2.67

TIME OF OBSERVATION		ELAPSED TIME (t') (hr)	HEAD TANK READING (in)	DIFFERENCE IN READING (R) (in)	R/t' (in/hr)	COEF. OF PERM. ($k = CF \frac{R}{t'}$) (ft/yr)	REMARKS (RECORD HEAD IN FEET, CHANGES IN HEAD, AND OTHER OBSERVATIONS)
19 —	HOUR						
9-10	8:24	—	1.00	—	—	—	Head at 5.00 ft.- Test started.
9-11	8:30	24.10	24.80	23.80	0.988	2.6	Water temperature at 80°F , Room
	8:45	—	1.60	—	—	—	temperature at 76°F
9-12	8:00	23.25	26.60	25.00	1.075	2.9	
	8:12	—	1.50	—	—	—	
9-13	8:00	23.80	22.60	21.10	0.887	2.4	
	8:24	—	1.40	—	—	—	Head lowered to 1.67 ft.
9-16	7:45	71.35	23.00	21.60	0.303	2.4	
	8:00	—	1.90	—	—	—	Head raised to 5.00 ft.
9-17	7:45	23.75	22.00	20.10	0.846	2.3	
	8:00	—	1.80	—	—	—	
9-18	7:45	23.75	21.70	19.90	0.838	2.2	
	8:00	—	1.00	—	—	—	
9-19	8:00	24.00	21.30	20.30	0.846	2.3	
	8:12	—	1.00	—	—	—	
9-20	8:00	23.80	21.70	20.70	0.870	2.3	Test stopped. Water temperature at 78°F, Room temperature at 76°F

1/Constant for USBR 5600 (8-inch diameter permeability cylinder)
2/Constant for USBR 5605 (19-inch diameter permeability cylinder)

GPO 855 - 090

Figure 6. – Permeability-settlement test data sheet 1 — example.

7-2379 (12-86) Bureau of Reclamation

PERMEABILITY-SETTLEMENT TEST DATA SHEET 2

Designation USBR 5600-89

SAMPLE NO.	PROJECT	FEATURE
Example		
TESTED BY / DATE	COMPUTED BY / DATE	CHECKED BY / DATE

CYLINDER NO. 15-8 inch diameter

PLACEMENT DATA

MASS OF CONTAINER + WET SOIL 21.42 lbm	FINAL MASS OF CONTAINER +WET SOIL 10.08 lbm	SPECIMEN AREA 50.27 in²
MASS OF 1ST LAYER 3.78 lbm	MASS OF WET SOIL 11.34 lbm	SPECIFIED PRESSURE 20 lbf/in²
MASS OF CONTAINER + WET SOIL 17.64 lbm	WET UNIT WEIGHT 129.7 lbf/ft³	OR 22 FEET OF FILL
MASS OF 2ND LAYER 3.78 lbm	PLACEMENT MOISTURE CONT. 14.5 %	REQUIRED INITIAL LOAD ON SPECIMEN 1005 lbf
MASS OF CONTAINER + WET SOIL 13.86 lbm	PLACEMENT DRY UNIT WEIGHT* 113.3 lbf/ft³	HYDRAULIC CYLINDER NO. 845
MASS OF 3RD LAYER 3.78 lbm	DESIRED MOISTURE CONT. 14.3 %	GAUGE READING 340

	TOTAL (in)	½ TOTAL (in)	SPECIMEN THICKNESS (INCHES)	
DIAL READING A + B, W/RING	0.718	0.359		
DIAL READING A + B, NO LOAD	0.712	0.356		
DIFFERENCE		0.003	3.000 ⊕ 0.003 =	3.003 INITIAL
DIAL READING A + B, W/L, WET			3.003 ⊖ 0.047 =	2.956 (L_1) CONSOL., WET

SETTLEMENT DATA

DATE 19—	HOUR OBSERVED	PRESSURE lbf/in²	TRAVEL (in) DIAL AT A READING	DIAL AT A AMOUNT	DIAL AT B READING	DIAL AT B AMOUNT	SETTLEMENT AVERAGE AMOUNT (in)	SETTLEMENT PERCENT
(1)	(2)	(3)	(4)	(5)	(6)	(7)	(8)	(9)
9-7	7:40	3"ring	0.377	—	0.341	—	—	—
9-7	8:10	No load	0.286	0.000	0.426	0.000	0.000	0.000
	8:20	20	0.316	0.030	0.471	0.045	0.038	1.27
	9:20	"	0.320	0.034	0.483	0.057	0.046	1.53
	10:20	"	0.322	0.036	0.489	0.063	0.050	1.67
9-8	8:00	w/load	0.322	0.036	0.489	0.063	0.050	1.67
9-10	8:30	w/L,wet	0.317	0.031	0.488	0.062	0.047	1.57
9-11	8:30	"	0.317	0.031	0.487	0.061	0.046	1.53
9-12	8:00	"	0.316	0.030	0.488	0.062	0.046	1.53
9-16	7:45	"	0.312	0.026	0.485	0.059	0.043	1.43
9-17	7:45	"	0.310	0.024	0.485	0.059	0.042	1.40
9-18	7:45	"	0.310	0.024	0.485	0.059	0.042	1.40
9-20	8:00	"	0.310	0.024	0.485	0.059	0.042	1.40 ▲
9-20	10:00	No load	0.311	0.025	0.482	0.056	0.041	1.37
REBOUND								

AFTER PERCOLATION DATA

MOISTURE CONTENT DETERMINATION

CONTAINER NUMBER	4
MASS OF CONTAINER + WET SOIL	15.03 lbm
MASS OF CONTAINER + DRY SOIL	13.55 lbm
MASS OF CONTAINER	3.74 lbm
MASS OF WATER	1.48 lbm
MASS OF DRY SOIL	9.81 lbm
MOISTURE CONTENT	15.1 %

CONSOLIDATED DRY UNIT WEIGHT

$$= \frac{\text{PLACEMENT DRY UNIT WEIGHT}}{\frac{100 - \%\ \text{SETTLEMENT}}{100}} = \frac{113.3}{\frac{100 - 1.40\ ▲}{100}}$$

$$= 114.9 \text{ lbf/ft}^3$$

NEEDLE NO. 40 NEEDLE READ. 47 PEN. RES. 1880 lbf/in²

MOISTURE CONTENT 15.1 % PENETRATION RESISTANCE 1880 lbf/in² CONSOLIDATED DRY UNIT WEIGHT 114.9 lbf/ft³

*MAXIMUM LABORATORY DRY UNIT WT. OR OTHER AS SPECIFIED.

REMARKS:

GPO 855-159

Figure 7. - Permeability-settlement test data sheet 2 — example.

14.1.10.4 Compact the soil uniformly by hand with a 9-lbm (4-kg) tamper.

14.1.10.5 Determine the depth to the top of the layer using a metal straight-edge and combination square.

14.1.10.6 Continue the compaction process until the soil layer is within 1/32 inch (1.0 mm) of the required 1-inch (25.4-mm) thickness.

14.1.10.7 Scarify the surface of each layer to a depth of 1/8 to 1/4 inch (3 to 6 mm) before placing the next layer.

14.1.10.8 Place and compact the soil for the next layer. The compacted depth after placement of the second layer should be within 1/32 inch (1.0 mm) of the required 2-inch (50.8-mm) thickness for 2 layers.

14.1.10.9 Repeat the compaction process until the three layers have been compacted.

14.1.11 *Undisturbed Specimen*:

NOTE 3.–The permeability and settlement characteristics of an undisturbed soil are usually determined by the procedures outlined in designations USBR 5610, 5615, or 5700. However, the 8-inch-i.d. permeability procedure for specimens under an applied normal pressure or the procedure for specimens under zero applied pressure may be used to determine the permeability of undisturbed soils.

14.1.11.1 Trim an undisturbed specimen to 7-1/2-inch diameter by 3-inch (190- by 75-mm) thick. A tolerance of ±1/32 inch (1.0 mm) for both the diameter and height is acceptable..

14.1.11.2 Place a wetted porous disk in the bottom of the permeability cylinder and carefully place and center the specimen on the disk.

14.1.11.3 Fill the annular space between the specimen and the cylinder wall with a sealant. A mixture of 10 percent dry powdered bentonite and 90 percent fine, dry sand by mass, or plaster of paris may be used. If the bentonite/sand mixture is used, compact it using a small tamping rod. The bentonite/sand mixture swells upon wetting and forms an effective seal.

14.1.11.4 Place and lightly compact a thin layer of uniformly graded fine sand over the soil and sealant to form a seating surface for the top porous disk.

14.1.12 Place the piston and top porous disk unit on top of the specimen so the dial gauge arms are directly over the dial gauge supports.

14.1.13 Lightly tap the piston into final position with the end of the tamper handle.

14.1.14 Place the load spring on top of the piston to hold it firmly in place.

14.1.15 Position and read the dial gauges and record as "no load" readings in column (3) of the *Settlement Data* section as shown on figure 7. The sum of these two gauge readings (A and B) is recorded as *Dial reading A + B, No load, Total, in*, in the *Placement Data* section. Calculate the average of A + B readings (divide by 2) and record as *1/2 Total, in*, as shown on figure 7.

14.1.16 Verify that the specimen thickness indicated by the dial gauges is within ±0.015 inch (0.381 mm) of that indicated by the 3.000-inch (76.20-mm) calibration ring (see subpars. 14.1.7 and 14.1.8).

14.1.17 If the specimen thickness is not within the tolerance specified in subparagraph 14.1.16, the specimen should be removed and a new specimen prepared and compacted.

14.1.18 Complete assembly of the permeability apparatus as shown on figure 1. Make sure the tension rods are securely screwed into the baseplate of the permeability cylinder.

14.1.19 Record the following information in the *Placement Data* section as shown on figure 7:

14.1.19.1 The *Specimen area, in*^{2} as calculated from the specimen diameter.

14.1.19.2 The *Specified pressure, lbf/in*^{2} on the specimen, generally calculated from the height and unit weight of the fill material being investigated, or as otherwise directed.

14.1.19.3 The *Required initial load on specimen, lbf* from the piston as determined from the specified pressure and the specimen area. (Generally, allowances are made for the mass of the top porous stone, piston, load spring, and bottom load plate, provided the mass of these items is considered to be a significant part of the required total pressure.)

14.1.19.4 Record under the *Placement Data* section the *Hydraulic Cylinder No.* and the appropriate *Gauge reading* from the spring calibration curve (USBR 1430) corresponding to the required load as shown on figure 7.

14.1.20 Place the cylinder of the appropriate hydraulic cylinder [usually 7 ton-force (62 kN)] between the bottom and the top load plates of the permeability apparatus as shown on figure 2.

14.1.21 Using the hydraulic pump, increase the pressure in the hydraulic cylinder until the correct pressure gauge reading is achieved.

14.1.22 Tighten the nuts on the tension rods against the bottom load plate. Do not overtighten since that would increase the load on the piston.

14.1.23 Release the pressure in the hydrualic cylinder and remove the ram.

14.1.24 Immediately after the pressure is applied, read and record dial readings A and B.

14.1.25 Continue reading and recording dials A and B until there is less than a 0.002-inch (0.05-mm) change during a 16-hour period. Identify the final reading as *w/load*, as shown in column (3) on figure 7. Maintain the specified pressure on the piston by checking it with the jack (subpars. 14.1.21 through 14.1.23) at the end of the 1st and 2d hour after load application and daily thereafter–adjusting the load as necessary.

14.1.26 Using the equations in subparagraphs 15.1 and 15.2, calculate the *initial thickness* and the *Consolidated thickness L', in*, and record the values as shown on figure 7.

14.1.27 Using the equations in subparagraphs 15.9 through 15.15, calculate the constants *C* and *CF* and record the values as shown on figure 6.

14.1.28 Release the rubber stopper that holds the air intake tube, and fill the head tank from the bottom

by forcing water through the flexible bleeder tube tubing at the bottom of the head tank.

14.1.29 After filling the tank, clamp the flexible tubing and slip the lower end of the tubing over the intake in the baseplate of the permeability cylinder.

14.1.30 Carefully insert the rubber stopper at the top of the head tank until it is tightly sealed.

14.1.31 Open the clamp on the connecting flexible tubing.

14.1.32 Allow the water to fill the tubing and flow through the bottom porous disk.

14.1.33 Tip the permeability cylinder slightly so the drain cock is raised and air bubbles can escape through the drain cock.

14.1.34 Continue the flow of water until there is no evidence of air in the system.

14.1.35 Position the head tank and close the drain cock so water at a low gradient permeates slowly upward through the specimen.

NOTE 4.–The head to be used during the soaking period depends upon the permeability of the soil as placed; it should range from 1 inch (25 mm) or less for specimens having *high* permeability to 1 foot (305 mm) or more for those having *low* permeability.

14.1.36 Continue slow permeation until the piston is completely covered with water, or for a period of 3 days, whichever occurs first.

14.1.37 Read dial gauges A and B after the specimen is thoroughly wetted or has been wetted for 3 days. Record these readings *W/L, wet* as shown on figure 7.

14.1.38 Pour water into the top of the permeability cylinder until it flows out of the overflow.

14.1.39 Securely clamp the connecting tubing between the tank and the cylinder.

14.1.40 Adjust the head tank to achieve the specified hydraulic gradient and record the *Head,* H_{wc} as shown on figure 6.

14.1.41 Loosen the rubber stopper on top of the head tank and refill the head tank as described in subparagraph 14.1.28.

14.1.42 Reset the stopper.

14.1.43 Lower the water level in the head tank to the 0.0 mark (near the top of the head tank) or below—by carefully opening and closing the clamp on the bleeder tube; continue withdrawing water until the water is removed from the air intake tube.

14.1.44 Record the test data as shown on figure 6.

14.1.45 Start the test by opening the clamp on the flexible tubing between the constant head tank and the baseplate of the permeability cylinder. Record the *Head tank reading, in.* Record the *Difference in reading, R, in,* and the various times as shown on figure 6. Read and record water and room temperatures as shown in the *Remarks* column of figure 6. Repeat these temperature measurements occasionally throughout the test.

NOTE 5.–If a head tank is operating properly, the air intake tube remains empty. A rise in water level in the air intake tube usually indicates leakage between the rubber stopper and head tank or air intake tube that must be corrected. Occasionally, when soil permeability is very low, a slight rise in water level in the air intake tube may be caused by changes in temperature or atmospheric pressure. Observations should not be recorded unless the water level is very near the bottom of the air intake tube.

14.1.46 Continue the test until the permeability rate becomes approximately constant or for a minimum of 10 days, taking daily readings—or more frequently if the flow rate is relatively high—of settlement, date, time, and head tank level as shown on figures 6 and 7.

14.1.47 Take dial gauge readings when the flow rate becomes virtually constant.

14.1.48 If tests using other hydraulic gradients are required, refill the head tank (see subpars. 14.1.40 through 14.1.43) and repeat subparagraphs 14.1.45 through 14.1.47.

14.1.49 After completion of the test runs, close the clamp on the flexible tubing between the constant head tank and the baseplate of the permeability cylinder, disconnect the tubing from the cylinder baseplate, and remove the cylinder from the head tank.

14.1.50 Remove the load on the piston by compressing the spring slightly and loosening the nuts on the tension rods.

14.1.51 After the load is removed, read dials A and B and record as *no load* readings as shown on figure 7. Also record the date and time.

14.1.52 Remove the dials and pour the water off the top of the specimen.

14.1.53 Remove the load plates, tension rods, load spring, piston, and top porous disk.

14.1.54 Perform a penetration resistance test on the specimen in accordance with USBR 5505 and record as shown on figure 7.

14.1.55 Remove a representative portion from the center of the specimen and determine the soil moisture content in accordance with USBR 5300.

14.2 *Test With Zero Applied Normal Pressure*:

14.2.1 After releasing the rubber stopper that holds the air intake tube and closing the clamp to the water supply tube, fill the head tank from the bottom by forcing water through the flexible bleed tube below the head tank.

14.2.2 After filling the head tank, close the clamp on the bleeder tube.

14.2.3 Carefully insert the stopper at the top of the head tank until it is tight.

14.2.4 Open the hose clamp attached to the water supply tubing so that water fills the tubing and fills the space in the cylinder above the specimen. Leave the air release tube open during initial filling to remove air from the space above the soil specimen.

14.2.5 After water starts to drain out the air release tube, close the hose clamp on the water supply tube, and close the air release valve.

14.2.6 Begin the test by opening the clamp to the water supply tube. Record the *Head tank reading, in* and time as shown on figure 6. Read and record water and room temperatures in the *Remarks* column as shown on figure 6. Repeat these temperature measurements occasionally during the test.

14.2.7 Continue the test until the permeability rate becomes approximately constant or for a minimum of 10 days. Obtain daily head tank level readings—or more frequent if the flow rate is relatively high.

14.2.8 If tests using other hydraulic gradients are required, repeat subparagraphs 14.2.1 through 14.2.7.

14.2.9 After completion of the test, disassemble the apparatus to expose the specimen.

14.2.10 Perform a penetration resistance test on the specimen in accordance with USBR 5505 and record as shown on figure 7.

14.2.11 Remove a representative portion from the center of the specimen and determine the moisture content in accordance with USBR 5300.

14.3 After completion of the permeability test, compare the permeability test results with the equivalent permeability of the equipment without soil as determined in accordance with USBR 1425. If the soil permeability test result is within 10 percent of the equivalent equipment value, the soil permeability result may have been influenced by the equipment. If appropriate, the test should be repeated in other permeability equipment having a higher water flow rate capacity.

15. Calculations

15.1 For a specimen tested under applied normal pressure in the 8-inch-i.d. permeability cylinder, calculate the initial specimen thickness.

$$H_i = 3.000 + \frac{1}{2}d_1 - \frac{1}{2}d_2 \quad (1)$$

where:

H_i = initial specimen thickness, in
3.000 = height of calibration ring, in
d_1 = dial reading A + B, w/ring (fig. 7), in
d_2 = dial reading A + B, no load (fig. 7), in

15.2 Calculate the amount of "travel" for dial at A.

$$S_A = d_A - d_3 \quad (2)$$

where:

S_A = amount of "travel" (col. 5, fig. 7), in
d_A = any given dial reading for dial at A (col. 4, fig. 7), in
d_3 = no load dial reading for dial at A (col. 4, fig. 7), in

15.3 Calculate the amount of "travel" for dial at B.

$$S_B = d_B - d_4 \quad (3)$$

where:

S_B = amount of "travel" (col. 7, fig. 7), in
d_B = any given dial reading for dial at B (col. 6, fig. 7), in
d_4 = no load dial reading for dial at B (col. 6, fig. 7), in

15.4 Calculate the average amount of settlement (col. 8, fig. 7).

$$d_{a_v} = \frac{S_A + S_B}{2} \quad (4)$$

where d_{a_v} equals amount of movement (col. 8, fig. 7), which occurred due to wetting and loading (dial gauge readings identified as w/L, wet), inches

15.5 Determine the settlement, expressed as a percentage of the initial thickness of specimen (col. 9, fig. 7).

$$\text{Settlement, \%} = 100 \left(\frac{d_{a_v}}{H_i} \right) \quad (5)$$

15.6 Calculate the consolidated thickness L′.

$$L' = H_i \pm d_{a_v} \quad (6)$$

where L' equals consolidated thickness, inches. Add d_{a_v} to H_i if the specimen expanded. If settlement occurred, subtract d_{a_v} from H_i.

15.7 Calculate the consolidated dry unit weight, lbf/ft^3 corresponding to the particular settlement.

$$\text{Consolidated dry unit weight, lbf/ft}^3 \quad (7)$$

$$= \frac{\text{placement dry unit weight, lbf/ft}^2}{\frac{(100 - \text{settlement, \%})}{100}}$$

15.8 Calculate the coefficient of permeability as follows from Darcy's Law:

$$Q = kiA \quad (8)$$

then

$$k = \frac{Q}{iA}$$

since

$$Q = \frac{V}{t} \quad \text{and} \quad i = \frac{H_{wc}}{L}$$

thus

$$k = \frac{\frac{V}{At}}{\frac{H_{wc}}{L}}$$

or

$$k = \frac{VL}{At\,H_{wc}}$$

where:

k = coefficient of permeability, ft/yr
V = volume of water discharge, ft^3 in time t
L = consolidated thickness (or length) of specimen, ft
A = area of specimen, ft^2
t = elapsed time during measurement, yr
H_{wc} = constant head = difference between headwater and tailwater levels, ft

15.9 To simplify the computations, the general equation given above has been partially solved and constants are introduced as follows:

$$V = \frac{RF}{28{,}320} \quad (9)$$

where:
R = difference in readings of head tank levels, in
F = calibration factor for the head tank, cm³/in
28,320 = change from cm³ to ft³

15.10 Calculate the consolidated thickness of the specimen.

$$L = \frac{L'}{12} \quad (10)$$

where:
L' = consolidated thickness of the specimen, in
12 = change from inches to feet

15.11 Calculate the elapsed time between head tank readings.

$$t = \frac{t'}{8{,}760} \quad (11)$$

where:
t' = elapsed time between head tank readings, hour
8,760 = change from hour to year

15.12 The area A equals 0.3491 ft² for an 8-inch i.d. permeability cylinder.

15.13 Substituting the expressions from subparagraphs 15.9 through 15.12 into the equation of subparagraph 15.8 yields:

$$k, \text{ ft/yr} = 0.0738 \left(\frac{RFL'}{t' H_{wc}} \right) \quad (12)$$

where:
$$0.0738 = \frac{8{,}760}{(28{,}320)\ 12\ (0.3491)}$$

15.14 Since the value L'/H_{wc} is constant for any particular head, let

$$C = 0.0738 \left(\frac{L'}{H_{wc}} \right) \quad (13)$$

15.15 This results in the following equation for the coefficient of permeability.

$$k, \text{ ft/yr} = CF \left(\frac{R}{t'} \right) \quad (14)$$

15.16 This method for computing the permeability is based on use of a constant head. If a "falling head" is used for special tests, the rate may be calculated on the basis of an equation presented in USBR 5700.

15.17 For tests on specimens under zero normal pressures, calculations for the coefficient of permeability are similar to those for the test under applied normal pressure, exclusive of thickness and settlement measurements for the value of L' (consolidated length of specimen). The original measurement of specimen length made after specimen placement is generally used. If measurements of specimen length after the test have been completed, indicate that the specimen either expanded or settled significantly; then, the final value of L' should be used for permeability calculations.

16. Report

16.1 The report is to consist of the following completed and checked forms:
"Added Water Determination" (fig. 4).
"Compacted Permeability Specimen Preparation Sheet" (fig. 5).
"Permeability–Settlement Test" data sheet 1 (fig. 6).
"Permeability–Settlement Test" data sheet 2 (fig. 7).

16.2 All calculations are to show a checkmark.

APPENDIX

X1. DRAWINGS OF 8-INCH-INSIDE DIAMETER (203-MM) PERMEABILITY CYLINDERS AND DIAL GAUGE REFERENCE BRACKET

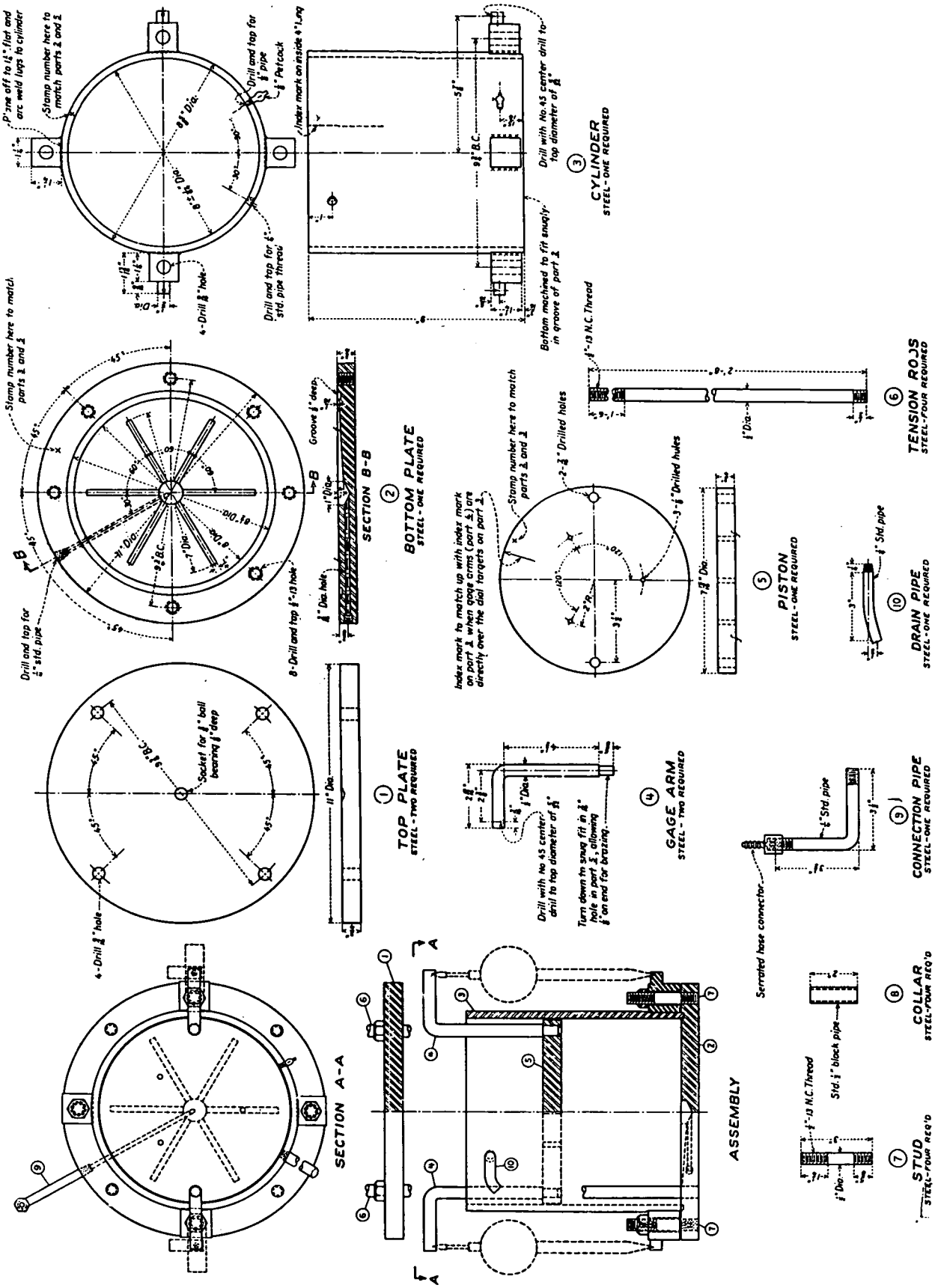

X1.1 – An 8-inch-inside-diameter steel permeability cylinder. 101-D-94

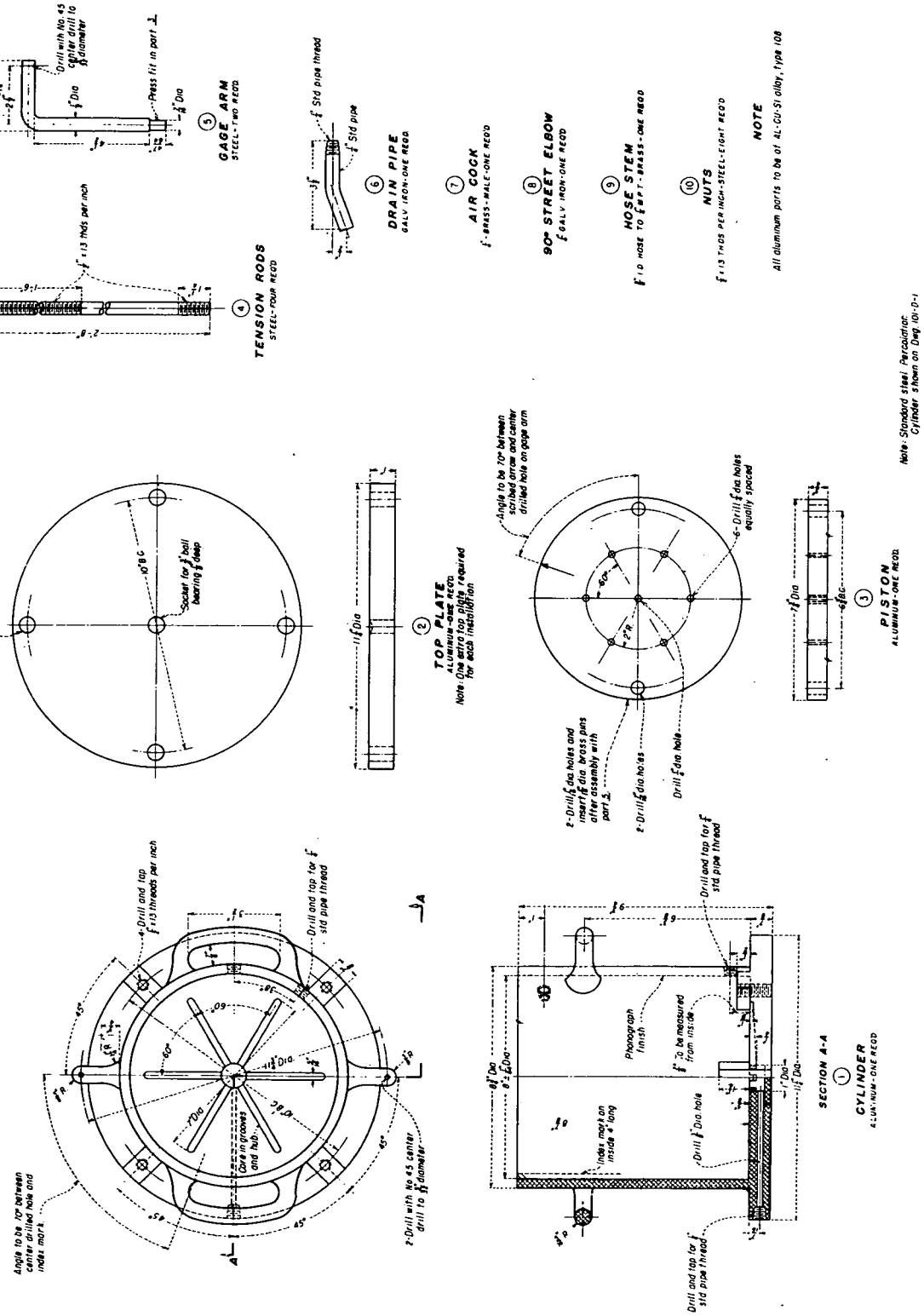

X1.2 – An 8-inch-inside-diameter aluminum permeability cylinder. 101-D-2

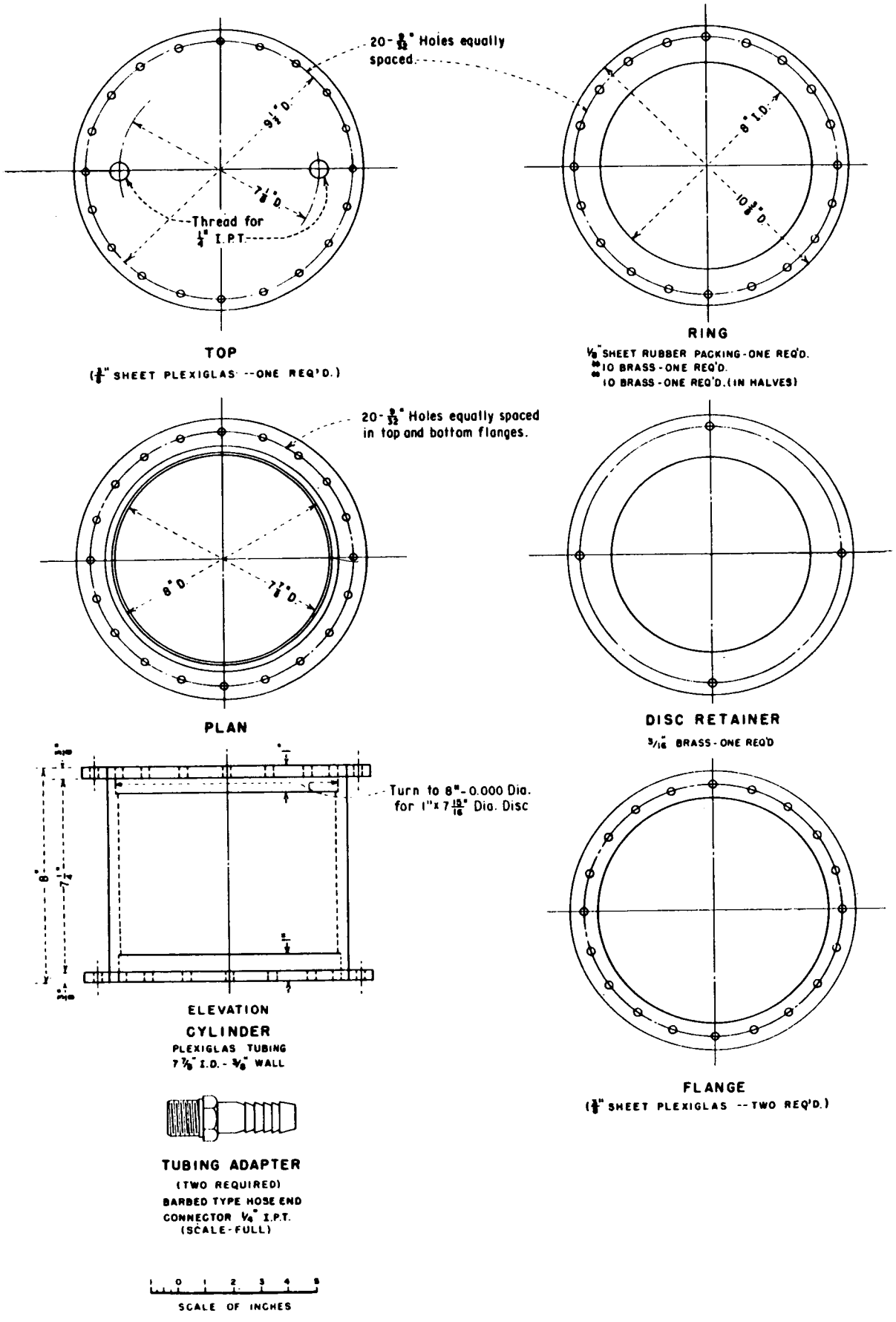

X1.3 – An 8-inch-inside-diameter plastic permeability cylinder. 101-D-51

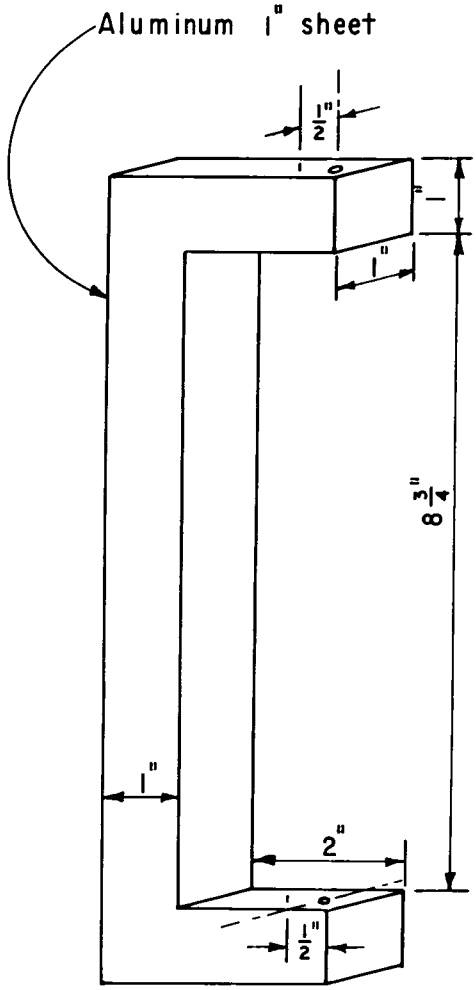

X1.4 – A dial gauge reference bracket for 8-inch permeability test.

UNITED STATES DEPARTMENT OF THE INTERIOR
BUREAU OF RECLAMATION

USBR 5605-89

PROCEDURE FOR

DETERMINING PERMEABILITY AND SETTLEMENT OF SOILS CONTAINING GRAVEL

INTRODUCTION

This procedure is under the jurisdiction of the Geotechnical Services Branch, code D-3760, Research and Laboratory Services Division, Denver Office, Denver, Colorado. The procedure is issued under the fixed designation USBR 5605. The number immediately following the designation indicates the year of acceptance or the year of last revision.

1. Scope

1.1 This designation outlines the procedure for determining permeability and settlement characteristics of compacted soils containing gravel particles 3 inches (75 mm) or less in diameter. A soil specimen is placed and tested under load in a 19-inch nominal inside diameter cylinder.

2. Auxiliary Tests

2.1 A test sample must be processed in accordance with USBR 5205 prior to performing this procedure. The moisture content must be determined in accordance with USBR 5300 as a part of performing this procedure.

3. Applicable Documents

3.1 *USBR Procedures*:
USBR 1007 Calibrating Dial Indicators
USBR 1012 Calibrating Balances or Scales
USBR 1020 Calibrating Ovens
USBR 1420 Calibrating Head Tanks
USBR 1425 Calibrating Permeability Test Equipment
USBR 1430 Calibrating the Loading Device for Permeability Tests
USBR 3900 Standard Definition of Terms and Symbols Relating to Soil Mechanics
USBR 5205 Preparing Soil Samples by Splitting or Quartering
USBR 5300 Determining Moisture Content of Soil and Rock by the Oven Method
USBR 5320 Determining Specific Gravity of Soils
USBR 5325 Performing Gradation Analysis of Gravel Size Fraction of Soils
USBR 5500 Performing Laboratory Compaction of Soils — 5.5-lbm Rammer and 18-in Drop
USBR 5515 Performing Laboratory Compaction of Soils Containing Gravel
USBR 5525 Determining the Minimum Index Unit Weight of Cohesionless Soils
USBR 5530 Determining the Maximum Index Unit Weight of Cohesionless Soils
USBR 5600 Determining Permeability and Settlement of Soils [8-in (203-mm) Diameter Cylinder]
USBR 7240 Performing Rapid Method of Construction Control

4. Summary of Method

4.1 A 9-inch-thick soil specimen is placed in a 19-inch nominal i.d. (inside diameter) permeability cylinder. An appropriate load is selected and the required pressure applied to the specimen. Water is permeated through the specimen until it is wetted. Water, under selected hydraulic gradients, is applied to the specimen and flow rates are measured periodically until they stabilize. Settlement measurements are also periodically obtained. The coefficient of permeability is calculated from the flow rate, specimen dimensions, and the applied hydraulic gradient.

5. Significance and Use

5.1 Permeability and settlement characteristics of soils can have a significant effect on many water resources project operations.

5.2 Seepage problems typically encountered in civil engineering deal with the flow of water through undisturbed or compacted soil.

5.3 This procedure is used for such purposes as investigations for compacted soil linings or earth embankment dams where a coefficient of permeability is required and the results of tests on the minus No. 4 (4.75 mm) or other fraction of soil in a smaller specimen would not be representative of the total material containing gravel. Using a standard compactive effort, an increasing proportion of gravel in a finer soil matrix will decrease the permeability until the gravel fraction becomes sufficiently large so the larger particles interfere with one another during compaction; this will cause an increase in permeability. This procedure should generally be limited to soils having coefficients of permeability higher than about 10 feet per year (1×10^{-5} centimeters/second).

5.4 Test specimens may be compacted using manual compaction (hand tamping) whereby equal soil masses are compacted to equal volumes to achieve the desired placement dry unit weight, or test specimens may be compacted using a mechanical compactor which inputs a constant compaction energy (USBR 5515) to each soil lift.

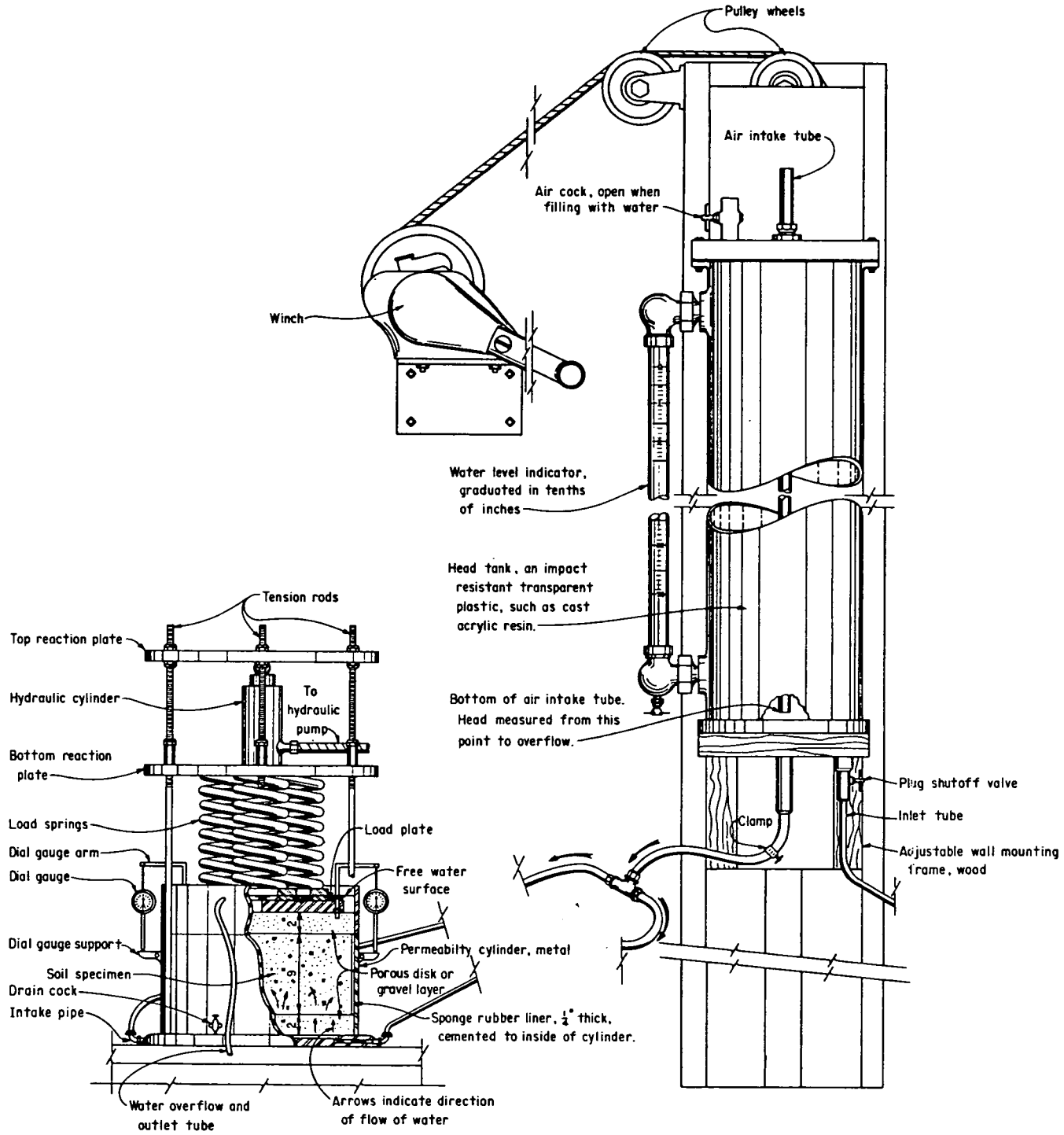

Figure 1. – 19-inch inside diameter permeability apparatus illustration.

6. Terminology

6.1 Definitions are in accordance with USBR 3900. Terms of particular significance are:

6.1.1 Coefficient of Permeability (k).–The rate of discharge of water under laminar flow conditions through a unit cross-sectional area of a porous medium under a unit hydraulic gradient and standard temperature conditions (usually 20 °C) (ASTM definition).

6.1.2 Cohesionless Soil.–A soil that, when unconfined, has little or no strength when air-dried and that has little or no cohesion when submerged (ASTM).

6.1.3 Cohesive Soil.–A soil that, when unconfined, has considerable strength when air-dried and that has significant cohesion when submerged (ASTM).

6.1.4 Hydraulic Gradient (i).–The loss of hydraulic head per unit distance of flow, $\Delta H/\Delta L$ (ASTM).

6.1.5 Laminar Flow.–Flow in which the head loss is proportional to the first power of the velocity (ASTM).

6.1.6 Permeability.–The capacity of a rock or soil to conduct liquid or gas.

6.1.7 Piping.–The progressive removal of soil particles from a mass by percolating water leading to the development of channels (ASTM).

6.2 Terms not included in USBR 3900 specific to this designation are:

6.2.1 *Head.*–Pressure at a point in a liquid, expressed in terms of the vertical distance of the point below the surface of the liquid (ASTM).

6.2.2 *Viscosity.*–The property of a fluid to resist flow under an applied force.

7. Apparatus

7.1 *General Apparatus*:

7.1.1 *Balances or Scales.*–Typical balances or scales used for this designation are:

Application	*Readable to*	*Approximate capacity*
Moisture content	0.1 g	1000 g
Mass of compaction specimen	0.01 lbm	500 lbm

7.1.2 *Metal Straightedge.*–A stiff metal straightedge 24-inches long. The scraping edge must be beveled if it is thicker than 1/8 inch.

7.1.3 Knife or screwdriver used to scarify the surfaces of soil layers.

7.1.4 *Moisture-proof Containers*–Large moisture-proof bags or containers for storing material.

7.1.5 *Mixing Pans.*–Metal mixing pans, about 3- by 2-feet by 4-inches deep.

7.1.6 *Shovel.*–D-handle, No. 4 scoop shovel.

7.1.7 *Tubing.*–Approximately 10-feet of 5/8-inch i.d. plastic or rubber tubing.

7.1.8 *Connectors.*–T-connector for 5/8-inch i.d. rubber tubing.

7.1.9 *Towels.*–Large, cotton, bath towels for surface drying the plus No. 4 (4.75 mm) soil fraction.

7.1.10 *Sieve.*–U.S.A. Standard Series No. 4 sieve (4.75 mm) with stand, conforming to requirements of USBR 1025.

7.1.11 *Yardstick.*–A 36-inch yardstick having at least 1/16-inch markings.

7.1.12 *Tape.*–A pocket tape graduated in inches.

7.1.13 *Digging Bar.*–A metal bar about 4 feet long by 1-1/2 inches in diameter.

7.2 *Equipment Unique to This Procedure* (see figs. 1 and 2; and app. X1):

7.2.1 *Dial Indicator Reference Bracket* (fig. X1.1).–Dial indicator reference bracket for 19-inch i.d. permeability cylinder.

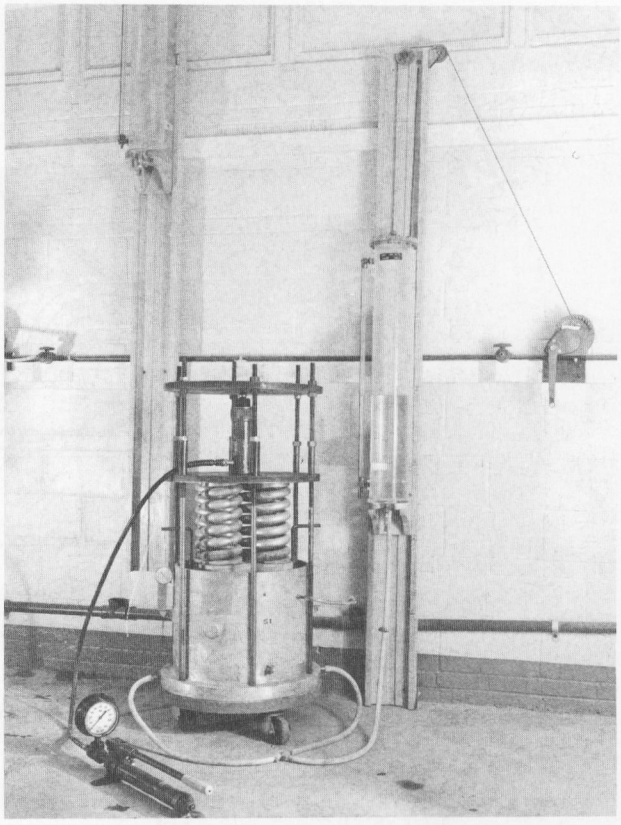

Figure 2.–19-inch permeability test being performed in the laboratory.

7.2.2 *Permeability Cylinder*(figs. X1.2 and X1.3).–A 19-inch nominal i.d. steel or aluminum cylinder, a minimum of 16 inches deep, with a 1/4-inch thick, compressible, closed-cell rubber liner attached to the inside wall of the cylinder.

7.2.3 *Porous Disk.*–Coarse grade carborundum porous disks, 19-inch diameter by 2-inch thick, two required.

7.2.4 *Load Plate With Porous Disk Attached.*–A steel or aluminum plate, 17-inches diameter, with a porous disk attached. Porous disk may be attached to the load plate with industrial adhesive.

7.2.5 *Calibration Ring.*–A specimen thickness calibration ring of 7 to 10 inch outside diameter by 9.000±0.001 inches high, made from metal pipe.

7.2.6 *Dial Indicator.*–Dial indicator with holders for 20-inch cylinder, continuous dial, 0.001-inch graduations, 3.000-inch travel.

7.2.7 *Reaction Plate.*–A steel or aluminum plate having six 13/16-inch diameter holes drilled for tension rods, two required.

7.2.8 *Tension Rods.*–Steel rods, 3/4 inch diameter by 45 inches long; top 18 inches threaded and bottom 1-3/4 inches threaded, six required.

7.2.9 *Loading System.*–Hydraulic loading device, equivalent to Porto-Power pump model No. P-85, fitted with a 10,000- lbf (45-kN) capacity gauge and including

flexible hose with quick connect couplings for connecting to ram and a 3/4-inch (20-mm) diameter steel ball. One ram equal to Porto-Power Ram RC-210 having a capacity of 7-ton (62-kN) force is required.

7.2.10 *Loading Spring.*–Coiled steel loading spring meeting the following USBR designation requirements:

Steel coil spring No.	*Coil o.d* ±1/4 in in	*Free height* ±1/4 in in	*Static load at deflections of* 2-1/4 in±¼ in lbf
2	4	10	1,200
3	6	10	2,400
5	6	10	7,200
6	6	10	9,000
7	6	12	15,000

NOTE 1.–The spring number (it is a USBR designation) is to be stamped on the outside of the coil. Spring ends are to be machined or ground so that the ends are perpendicular to the axis. Springs are to have two coats of aluminum paint.

7.2.11 *Tamper.*–A 9-lbm tamper with 4-inch-diameter face for packing permeability test specimens.

7.2.12 *Tamper.*–A 40-lbm tamper with 6-inch-diameter face.

7.2.13 *Head Tank.*–Plexiglas cylinder, 6-inch diameter by 40 inches long (fig. X1.3).

7.2.14 *Screen.*–U.S.A. Standard series No. 8 screen, 19-inch diameter, to use on top of a 2-inch layer of uniform fine gravel (if needed) in the bottom of the permeability cylinder.

7.2.15 *Dolly.*–One heavy metal dolly for each permeability cylinder.

7.2.16 *Liner.*–A sponge rubber liner, 1/4-inch-thick closed cell, medium density (12 to 16 lbm/ft^3) with skin on both sides.

7.2.17 *Hoist.*–1,000-lbf capacity, for lifting permeability cylinders, load plate, reaction plates, etc., with yoke for lifting permeability cylinders.

7.2.18 *Porous Soil.*–Clean, uniform, fine gravel, such as 3/8-inch to No. 4 (9.5 to 4.75 mm) (when needed) in place of porous disks.

8. Reagents and Materials

8.1 Tapwater, at or slightly above room temperature, that is free of acids, alkalies, or oils and is suitable for drinking should be used for performing this procedure.

8.2 Industrial adhesive (such as solvent type, rubber-based adhesive) is required for attaching the top porous disk to the piston.

8.3 Sponge rubber sheet, 1/4-inch thick closed cell for cylinder liners.

8.4 Rubber cement for attaching the sponge rubber liner to the inside of the permeability cylinder.

9. Precautions

9.1 *Safety Precautions*:

9.1.1 Care should be taken, when applying loads on the specimen, not to over stress the tension rods. For six 3/4-inch diameter rods (of mild steel) the maximum safe pressure that can be applied to the specimen is about 120 lbf/in^2.

9.1.2 The tension rods must be screwed the entire threaded length into the baseplate. Gloves should be worn to avoid cutting hands on the threads.

9.2 *Technical Precautions*:

9.2.1 It is possible that a specimen may leak or "pipe" along the side of the cylinder when the applied hydraulic gradient is too high. If this happens, the test should be stopped, prepare another specimen, and perform the test at a lower hydraulic gradient. Sometimes piping can be detected by an excessive accumulation of soil on the top plate or a sudden increase in apparent permeability.

9.2.2 The initial hydraulic gradient for pervious soils should be as low as possible while still maintaining flow through the soil specimen.

9.2.3 When readings cannot be made daily (e.g., on weekends or holidays), the head should be reduced so that the permeability test is not interrupted. However, if the test specimen permeability is such that the head tank may drain during an unattended period, close the clamp in the line from head tank to cylinder and cover the specimen with water as noted in subparagraph 14.29 during the interim.

9.2.4 Care should be taken to ensure that the temperature of the water in the head tank is maintained at the same temperature as that in the room where the test is performed—preferably at a temperature of about 5 °F above that of the room. If water colder than the specimen is used, air dissolved in the water comes out of solution and becomes trapped in the voids of the specimen as air bubbles; consequently, an erroneously low permeability value is obtained.

9.2.5 Due to the effects of sampling, handling, processing, and testing on some materials, results of this test may not reflect in-place conditions or the properties of the material after processing and placement during construction. Of particular concern are materials such as soft and/or friable decomposed granite, sandstone, shale, limestone, claystone, etc. or soils affected by air and/or oven drying. Such materials must be identified before processing and the person requesting the test should verify whether standard procedures are to be followed, whether modifications are appropriate, or whether the material should be processed and tested at all. Cautionary statements must be made on test data forms and in reporting the test data.

10. Sampling, Test Specimen and Test Units

10.1 All data are to be recorded on the "Preparation of Permeability Test Specimen Containing Gravel" form as shown on figure 3.

10.2 Process a test sample of about 200 lbm of minus 3-inch material in accordance with USBR 5205.

10.3 Determine whether the compaction characteristics and properties of the test sample are defined by USBR 5515 or 5525 and 5530. For this procedure, refer to materials

7-2394 (12-86) Bureau of Reclamation	PREPARATION OF PERMEABILITY TEST SPECIMEN CONTAINING GRAVEL	Designation USBR 5605-89
SAMPLE NO. 29L-15	PROJECT Example	FEATURE Example
TESTED BY DATE	COMPUTED BY DATE	CHECKED BY DATE

		COHESIVE	COHESIONLESS
(1)	PERCENT MINUS NO. 4 MATERIAL IN SAMPLE, P_s (%)	65.0	
(2)	PERCENT PLUS NO. 4 MATERIAL IN SAMPLE, P_g (%)	35.0	
(3)	MAXIMUM DRY UNIT WEIGHT OF MINUS NO. 4, γ MAX (lbf/ft^3)	111.1	
(4)	OPTIMUM MOISTURE CONTENT OF MINUS NO. 4 (%)	14.5	
(5)	DESIRED COMPACTION MOISTURE CONTENT, MINUS NO. 4 (%)	14.5	
(6)	AVERAGE BULK SPECIFIC GRAVITY (OVENDRIED MATERIAL)	2.50	
(7)	AVERAGE ABSORPTION OF PLUS NO. 4 MATERIAL (%)	1.6	
(8)	PERCENT OF MAXIMUM DRY UNIT WEIGHT OF MINUS NO. 4 MATERIAL, EXPRESSED AS A DECIMAL, D	0.96	
(9)	MAXIMUM DRY UNIT WEIGHT OF TOTAL MATERIAL = $\frac{100}{\frac{(1)}{(8)\,(3)} + \frac{(2)}{(6)\,62.43}}$ (lbf/ft^3)	119.9	
(10)	DESIRED PLACEMENT DRY UNIT WEIGHT (lbf/ft^3)	119.9	
(11)	AREA OF CYLINDER (ft^2)	1.982	
(12)	CALIBRATION RING HEIGHT (in)	9.000	
(13)	TOTAL MASS OF DRY MATERIAL REQUIRED FOR ONE SPECIMEN = $\frac{(10)\,(11)\,(12) \times 1}{12}$ (lbm)	178.23	
(14)	MASS OF DRY MATERIAL REQUIRED FOR A SINGLE LIFT = $\frac{(13)}{3}$ (lbm)	59.41	

MASS OF INDIVIDUAL PARTICLE SIZE REQUIRED

	SIEVE SIZE	1 1/2-inch (37.5 mm) (a)	3/4-inch (19.0 mm) (b)	3/8-inch (9.5 mm) (c)	No. 4 (4.75 mm) (d)	Minus No. 4 (4.75 mm) (e)
(15a)	PERCENT RETAINED (%)	4.3	8.7	9.6	12.8	64.6
(15b)	DRY MASS REQUIRED PER SPECIMEN 1/2/ = (13) (15a) (.011) (lbm)	8.43	17.06	18.82	25.09	126.65
(15c)	DRY MASS REQUIRED PER LIFT = $\frac{(14) \times (15a)\ 2/}{100}$ (lbm)	2.55	5.17	5.70	7.60	38.38
(15d)	ABSORPTION (+ NO. 4) OR MOISTURE CONTENT (-NO. 4) %	1.6	1.6	1.6	1.6	14.5
(15e)	WET MASS REQUIRED PER LIFT 3/ = (15c) $\left[1 + \frac{(15d)}{100}\right]$ 2/ (lbm)	2.59	5.25	5.79	7.72	43.95

CONSTANTS

100	CONVERT PERCENT TO DECIMAL OR DECIMAL TO PERCENT	1	CONVERT lbf TO lbm OR lbm TO lbf
62.43	UNIT WEIGHT OF WATER AT 4°C	3	NUMBER OF COMPACTION LIFTS
12	CONVERT In TO ft	0.011	CONVERT PERCENT TO DECIMAL AND PROVIDE 10% EXCESS TEST MATERIAL

1/CALCULATES MASS OF MATERIAL PLUS 10 PERCENT EXCESS FOR ONE SPECIMEN
2/USE EACH SIZE OF MATERIAL IN COLUMNS (a) THROUGH (e), RESPECTIVELY
3/NOT REQUIRED FOR COHESIONLESS MATERIAL

REMARKS: _____

GPO 853 - 485

Figure 3. – Preparation of permeability test specimen containing gravel — example.

defined by USBR 5515 as "cohesive," and refer to materials defined by USBR 5525 and 5530 as "cohesionless."

10.4 Perform a gradation analysis on the entire test sample according to USBR 5325. Record on figure 3 (to the nearest 0.1 %) the percent minus No. 4 (4.75 mm) material in sample on line (1), percent plus No. 4 in sample on line (2), percent retained for each gravel size on line (15a) in columns (a) through (d), and percent minus No. 4 in column (e). Store the individual gravel size material and minus No. 4 material in separate moisture-proof containers.

10.5 The desired placement dry unit weight and moisture content of the test specimen is usually (a) a specified dry unit weight and moisture content, (b) a percent of maximum unit weight and a moisture content for cohesive materials (i.e. 95% maximum unit weight), or (c) a percent relative density for cohesionless materials (i.e. 70% relative density). If alternative (a) is required, the total dry unit weight and moisture content can be obtained from an in-place density test or as directed by the responsible engineer. Alternatives (b) and (c) require the maximum unit weight or the maximum and minimum index unit weights of the materials to be determined.

10.5.1 *Cohesive Materials.*–If the desired placement dry unit weight and moisture content are specified, follow the procedures in subparagraph 10.6. If a percent of maximum unit weight is specified, determine the maximum unit weight of the total material either by following the procedures in USBR 5515 or by estimating the maximum unit weight of total material by following procedures in subparagraphs 10.5.1.1 through 10.5.1.4, then continue with subparagraph 10.6.

10.5.1.1 Obtain a test sample of about 45 lbm of the minus No. 4 (4.75 mm) material and determine the maximum dry unit weight and optimum moisture content in accordance with USBR 5500 or 7240. Record the maximum dry unit weight and optimum moisture content of minus No. 4 material to 0.1 lbf/ft³ and 0.1 percent, respectively, on lines (3) and (4), respectively on figure 3.

10.5.1.2 Record desired moisture content of minus No. 4 material needed for compacting the permeability specimen on line (5) figure 3.

10.5.1.3 Determine average bulk specific gravity and average absorption of the plus No. 4 material in accordance with USBR 5320. Record the average bulk specific gravity and the average absorption of the plus No. 4 material (to the nearest 0.01 and 0.1 %, respectively) on line (6) and line (7), respectively.

10.5.1.4 Calculate maximum dry unit weight of total material.

$$\gamma_t = \frac{100}{\frac{P_s}{D\,\gamma_d} + \frac{P_g}{62.43\,G}} \qquad (1)$$

where:

γ_t = maximum dry unit weight of total material, lbf/ft³

γ_d = maximum dry unit weight of minus No. 4 fraction from USBR 5500, lbf/ft³

G = average bulk specific gravity (ovendry material) from USBR 5320

P_s = percent minus No. 4 in sample from USBR 5320, %

P_g = percent plus No. 4 in sample from USBR 5320, %

D = percent of maximum dry unit weight of minus No. 4 material, expressed as a decimal (see note 2)

100 = convert from percent to decimal

62.43 = unit weight of water at 4 °C, lbf/ft³

Record γ_t to 0.1 lbf/ft³ on line (9) (fig. 3).

NOTE 2.–If more precise data are not available, the value of D may be estimated from the curves shown on figure 4 using the following guide:

> Enter the graph on the abscissa with a known percentage of gravel and follow that percentage up to its intersection with one of the three curves that is characteristic of the gravel type. Traverse the graph horizontally to the left to intersect the ordinate, and read the value of D. Record the value of D (to the nearest 0.01) on line (8) as "Percent of maximum dry unit weight of minus No. 4 material, expressed as a decimal."

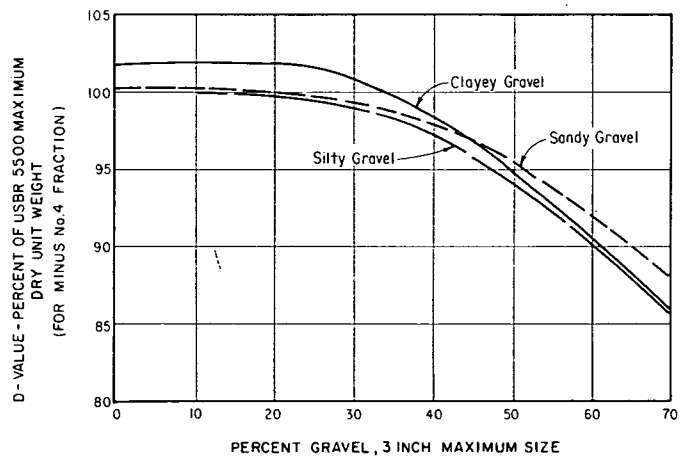

Figure 4. – Percent gravel versus D-value. 101-D-390

10.5.2 *Cohesionless Material.*–If the desired placement dry unit weight and moisture content are specified, follow the procedures in subparagraph 10.6. If the percent relative density of the total material is specified, determine the maximum and minimum index unit weight of the total material by following procedures in USBR 5525 and 5530, respectively, then continue with subparagraph 10.6.

10.6 Record the desired placement dry unit weight of the total material to the nearest 0.1 lbf/ft³ on line (10) (fig. 3).

10.7 Obtain the area of the permeability cylinder from the calibration data and record to the nearest 0.001 ft² on figure 3, line (11). Obtain the calibration ring height from the calibration data and record to the nearest 0.001 inch on line (12).

10.8 Calculate total mass of dry material required for one specimen.

$$M_T = \frac{\gamma_p A_c H_r (1)}{12} \quad (2)$$

where:

M_T = total mass of dry material required for one specimen, lbm
γ_p = desired placement dry unit weight of total material, lbf/ft³
A_c = area of permeability cylinder, ft²
H_r = calibration ring height, in
12 = change inch to foot
1 = convert from lbf to lbm

Record M_T to the nearest 0.01 lbm on line (13) (fig. 3).

10.9 Calculate mass of dry material required for a single lift of a specimen.

$$M_L = \frac{M_T}{3} \quad (3)$$

where:

M_L = mass of dry material required for a single lift, lbm
M_T = total mass of dry material required for one specimen, lbm
3 = number of compaction lifts

Record M_L to the nearest 0.01 lbm on line (14) (fig. 3).

10.10 Prepare the plus No. 4 and minus No. 4 material for testing.

10.10.1 *Cohesive Materials*:

10.10.1.1 Place each size of plus No. 4 material into a separate bucket or other suitable container and prepare SSD (saturated surface dried condition) in accordance with USBR 5320.

10.10.1.2 Prepare the minus No. 4 material to the desired placement moisture content.

10.10.1.2.1 Obtain the moisture content of the minus No. 4 material in accordance with USBR 5300.

10.10.1.2.2 Determine the quantity of water to add or to remove from the stored soil to obtain the desired moisture content. The form on figure 5 may be used.

10.10.1.2.3 Add or remove water as necessary to obtain the desired moisture content. Add water to the specimen in a pan by evenly sprinkling water over the surface and mixing thoroughly. Remove water by air drying in a pan. After the desired amount of water has been added or removed, place the material in a storage can and store in accordance with the standing times specified in USBR 5500.

10.10.1.2.4 Determine the moisture content of the soil in accordance with USBR 5300. Repeat subparagraphs 10.10.1.2.2 through 10.10.1.2.4 until the desired moisture is within ±0.5 percent of that specified.

10.10.1.3 Calculate total dry mass of material required for one specimen of each screen size of plus No. 4 or minus No. 4 (4.75 mm).

$$m_s = \frac{1.10 (M_T P_r)}{100} \quad (4)$$

where:

m_s = dry mass of material required for one specimen of each screen size (plus No. 4) or minus No. 4 (4.75 mm), lbm
P_r = percent of material retained on each screen size (plus No. 4) or the percent of minus No. 4 material from line (15a)
M_T = total mass of dry material required for one specimen, from line (13), lbm
1.10 = increases 10 percent additional material to test specimen for providing excess test material
100 = convert from percent to decimal

Record m_s to the nearest 0.01 lbm on line (15b) (fig. 3).

10.10.1.4 Calculate dry mass of material required for a single lift of each screen size of plus No. 4 and minus No. 4 (4.75 mm).

$$m_l = \frac{P_r M_L}{100} \quad (5)$$

where:

m_l = dry mass of material required for a single lift of each screen size of plus No. 4 or minus No. 4 (4.75 mm), lbm
P_r = percent of material retained on each screen size plus No. 4 or the percent of minus No. 4 material from line (15a)
M_L = mass of dry material required for a single lift from line (14), lbm
100 = convert from percent to decimal

Record m_l to the nearest 0.01 lbm on line (15c) (fig. 3).

10.10.1.5 Determine the average absorption of the plus No. 4 material in accordance with USBR 5320. Record the value to the nearest 0.1 percent on line (15d), columns (a) through (d).

10.10.1.6 Determine the moisture content of the minus No. 4 material previously prepared in subparagraph 10.10.1.2. Record the value to the nearest 0.1 percent on line (15d) column (e).

10.10.1.7 Calculate wet mass of material required for a single lift of each screen size of plus No. 4 and minus No. 4 (4.75 mm).

$$m_w = m_l \left(1 + \frac{w}{100}\right) \quad (6)$$

where:

m_w = wet mass of material required for a single lift of each screen size of plus No. 4 or minus No. 4 (4.75 mm), lbm
m_l = dry mass of material required for a single lift of each screen size of plus No. 4 or minus No. 4 (4.75 mm) from line (15c), lbm
w = moisture content or absorption of each material size from line (15d), %
100 = convert from percent to decimal

Record m_w to the nearest 0.01 lbm on line (15e) columns (a) through (e).

7-2327 (10-85) Bureau of Reclamation

ADDED WATER DETERMINATION

Designation USBR - 5605 - 89__

SAMPLE NO.	PROJECT	FEATURE
29L-15	Example	Example

COMPUTED BY	DATE	CHECKED BY	DATE

Specimen No.	Moisture Content %			Mass g (lbm)				
	Initial	Desired	Difference	Specimen and Container	Container	Specimen	Dry Mass of Specimen	Water to Add
	(1)	(2)	(3)	(4)	(5)	(6)	(7)	(8)
1	6.7	14.5	8.1*	216.6	24.7	191.9	179.9	14.6
			(2) – (1)			(4) – (5)	$100\left[\frac{(6)}{100+(1)}\right]$	$(7)\left[\frac{(3)}{100}\right]$

Remarks: *0.3 percent added for evaporation loss

Auxiliary Tests:

USBR 5300 - 89 __

GPO 848-762

Figure 5. - Added water determination — example.

10.10.2 *Cohesionless Materials*:

10.10.2.1 Oven dry or air dry each size of plus No. 4 material.

NOTE 3.–The addition of moisture to cohesionless materials for facilitating compaction requires judgement. As a guideline, most cohesionless materials can be placed without moisture at relative densities up to 75 or 80 percent. Placement at greater relative densities may be enhanced by adding moisture during the compaction process.

10.10.2.2 Calculate total dry mass required per specimen of each screen size of plus No. 4 and the minus No. 4 (4.75 mm) material, and calculate the dry mass required per lift of each screen size of plus No. 4 and minus No. 4 material, as described in subparagraphs 10.10.1.3 and 10.10.1.4, respectively.

10.11 *Reprocessed Soil*:

10.11.1 If reprocessing of soil is necessary, soil previously compacted should be mixed with as much "new soil" that is available. This practice should be avoided when testing plastic clay soils which tend to form lumps or when the soil is friable and the particles break down during testing.

10.11.2 A note must be made on the data sheets and the compaction curve indicating reprocessed soil was used.

11. Preparation of Apparatus

11.1 Refer to figure 1 to correctly assemble the permeability apparatus.

11.2 Record the head tank number and its calibration factor, F, as determined by USBR 1420 on the "Permeability-Settlement Test Data Sheet 1" as shown on figure 6.

11.3 Clean the head tank to remove any impurities that may clog lines or restrict free waterflow.

11.4 Check the air intake tube and clean if necessary.

11.5 Check the tubing for leakage and replace if necessary.

11.6 For the outlet tube on the water overflow nipple (fig. 1), cut a small hole in the tube just beyond the end of the nipple. This will provide an inlet for air and prevent the tube from acting as a siphon.

11.7 Check the sponge rubber liner in the permeability cylinder. Remove the liner if it is in poor condition; cut a new piece of sponge rubber to fit inside the cylinder and attach it with rubber cement.

12. Calibration and Standardization

12.1 Verify that equipment is currently calibrated in accordance with the applicable calibration procedure. If the calibration is not current, perform the calibration before using the equipment for this procedure.

USBR 1000 Standards for Linear Measurement Devices
USBR 1010 Calibrating Unit Weight Measures
USBR 1012 Calibrating Balances or Scales
USBR 1420 Calibrating Head Tanks
USBR 1425 Calibrating Permeability Test Equipment
USBR 1430 Calibrating the Loading Device for Permeability Tests

12.2 Determine the average inside area of the permeability cylinder and the average height of the calibration ring in accordance with USBR 5515.

13. Conditioning

13.1 Place the minus No. 4 (4.75 mm) material in a moisture-proof container, and store in accordance with the minimum standing times outlined in USBR 5500.

13.2 For cohesive material, place each size of the plus No. 4 (4.75 mm) material in water and saturate in accordance with USBR 5320.

14. Procedure

14.1 Submerge the bottom porous disk and load plate with attached porous disk in pans of water for a minimum of 30 minutes.

14.2 Remove the bottom porous disk from the water, allow it to drain for about 15 minutes, and place it in the permeability cylinder.

NOTE 4.–If the permeability of the material to be tested is estimated to be near or greater than that of the porous disk, the bottom porous disk should be replaced with a 2-inch thick layer of uniform fine gravel such as 3/8-inch to No. 4 (9.5- to 4.75-mm) gravel, which is more pervious than the soil to be tested. If a pervious gravel layer is used, place a No. 8 wire screen on top of the uniform gravel layer. Also, for specimens of very high permeability a pervious layer may be needed to replace the top porous disk.

14.3 Place dial gauges A and B in the dial gauge reference bracket and note the gauge readings. Throughout the test, check the dial gauges—as necessary—to ensure that the initial dial gauge readings have not changed. Readjust the gauges to the initial readings if required.

14.4 Determine the initial dial reading as described in USBR 5515. Record the date, time, and initial dial readings to the nearest 0.001 inch as shown on figure 7. In the "Settlement Data" section, record initial dial readings (A and B) in columns (4) and (6) and label as *Ring* in column (3) of figure 7. In the "Placement Data" section, the sum of A and B readings is recorded as *Dial reading A + B, w/ring* under *Total*. Calculate the average of the A and B readings by dividing the *Total* by two, and record under *1/2 Total*.

14.5 *Place and Compact the Specimen*:

NOTE 5.–Compaction of the specimen is normally performed by hand using the large and small tamping hammers. Techniques for using the large mechanical compactor (USBR 5515) to compact the test specimen are described in appendix X2.

14.5.1 Measure—to the nearest 1/32 inch—the depth from the top of the permeability cylinder to the top of the bottom porous disk.

14.5.2 Place the mass (wet or dry) of material required for one 3-inch thick lift into the permeability cylinder.

7-2378 (12-86)
Bureau of Reclamation

PERMEABILITY-SETTLEMENT TEST DATA SHEET 1

Designation USBR 5605-89

SAMPLE NO.	PROJECT	FEATURE
29L-15	Example	Example
TESTED BY / DATE	COMPUTED BY / DATE	CHECKED BY / DATE

CYLINDER NO. 12

TIME INSTALLED		HEAD TANK		HEAD-(H_{wc}) (SEE REMARKS COLUMN) (ft)	CONSOLIDATED THICKNESS - (L') (DATA SHEET NO. 2) (in)	CONSTANT $C = 0.0738 \frac{L'}{H_{wc}}$ 1/ $C = 0.013 \frac{L'}{H_{wc}}$ 2/	CONSTANT CF
DATE 1989	HOUR	NO.	CALIBRATION FACTOR (F) (cm^3/in)				
5-16	13:00	2	425.85	0.75	8.962	0.155	66.0
5-18	12:00	2	425.85	3.00	8.962	0.039	16.6

TIME OF OBSERVATION		ELAPSED TIME (t') (hr)	HEAD TANK READING (in)	DIFFERENCE IN READING (R) (in)	R/t' (in/hr)	COEF. OF PERM. ($k = CF \frac{R}{t'}$) (ft/yr)	REMARKS (RECORD HEAD IN FEET, CHANGES IN HEAD, AND OTHER OBSERVATIONS)
1989	HOUR						
5-16	13:04	--	33.0	--	--	--	Head at 0.75 ft. (i=1)
5-16	14:43	1.65	6.5	26.5	16.06	1100	Water temperature at 72°F
5-17	6:48	--	33.0	--	--	--	Room temperature at 70°F
	8:05	1.28	5.6	27.4	21.4	1400	
	8:15	--	33.0	--	---	--	
	9:38	1.38	4.0	29.0	21.0	1400	
	9:50	--	33.0	--	--	--	
	10:15	1.42	3.0	30.0	21.1	1400	
	10:25	--	33.0	--	--	--	
	11:40	1.25	6.5	26.5	21.2	1400	
	11:50	--	33.0	--	--	--	
	13:02	1.20	6.3	26.7	22.3	1500	
	13:15	--	33.0	--	--	--	
	14:30	1.25	5.5	27.5	22.0	1500	
5-18	6:40	--	33.0	--	--	--	
	8:00	1.33	3.8	29.2	22.0	1500	
	8:10	--	33.0	--	--	--	
	9:27	1.28	4.3	28.7	22.4	1500	
	9:40	--	33.0	--	--	--	
	10:55	1.25	5.6	27.4	22.0	1500	
	12:15	--	33.0	--	--	--	Head raised to 3.00 ft. (i=4)
5-18	12:35	0.33	5.5	27.5	83.3	1400	
	12:50	--	33.0	--	--	--	
	13:09	0.32	6.2	26.8	83.3	1400	
	13:20	--	33.0	--	--	--	
	13:40	0.33	5.5	27.5	83.3	1400	
	13:55	--	33.0	--	--	--	
	14:15	0.33	4.7	28.3	85.8	1400	
	14:30	--	33.0	--	--	--	
	14:50	0.33	5.0	28.0	84.8	1400	
	15:00	--	33.0	--	--	--	Water temperature at 71°F
	15:20	0.33	5.4	27.6	83.6	1400	Test stopped - Room temp. at 70°F

1/Constant for USBR 5600 (8-inch diameter permeability cylinder)
2/Constant for USBR 5605 (19-inch diameter permeability cylinder)

GPO 855-090

Figure 6. – Permeability-settlement test data sheet 1 — example.

7-2379 (12-86) Bureau of Reclamation

PERMEABILITY-SETTLEMENT TEST DATA SHEET 2

Designation USBR 5605-89

SAMPLE NO.	PROJECT	FEATURE
29L-15	Example	Example
TESTED BY / DATE	COMPUTED BY / DATE	CHECKED BY / DATE

CYLINDER NO. 12

PLACEMENT DATA

MASS OF CONTAINER + WET SOIL ____ lbm	FINAL MASS OF CONTAINER +WET SOIL ____ lbm	SPECIMEN AREA 283.5 in²
MASS OF 1ST LAYER ____ lbm	MASS OF WET SOIL ____ lbm	SPECIFIED PRESSURE 50 lbf/in²
MASS OF CONTAINER + WET SOIL ____ lbm	WET UNIT WEIGHT ____ lbf/ft³	OR — FEET OF FILL
MASS OF 2ND LAYER ____ lbm	PLACEMENT MOISTURE CONT. ____ %	REQUIRED INITIAL LOAD ON SPECIMEN 14,175 lbf
MASS OF CONTAINER + WET SOIL ____ lbm	PLACEMENT DRY UNIT WEIGHT 119.9 lbf/ft³	HYDRAULIC CYLINDER NO. 850
MASS OF 3RD LAYER ____ lbm	DESIRED MOISTURE CONT. ____ %	GAUGE READING 2900

	TOTAL (in)	½ TOTAL (in)	SPECIMEN THICKNESS (INCHES)			
DIAL READING A + B, W/RING	1.671	0.836				
DIAL READING A + B, NO LOAD	1.668	0.834				
DIFFERENCE		0.002	9.000	⊕ 0.002 =	9.002	INITIAL
DIAL READING A + B, W/L, WET			9.002	⊖ 0.040 =	8.962	(L^1) CONSOL., WET

SETTLEMENT DATA

DATE 19 89	HOUR OBSERVED	PRESSURE lbf/in²	TRAVEL (in) DIAL AT A READING	DIAL AT A AMOUNT	DIAL AT B READING	DIAL AT B AMOUNT	SETTLEMENT AVERAGE AMOUNT (in)	SETTLEMENT PERCENT
(1)	(2)	(3)	(4)	(5)	(6)	(7)	(8)	(9)
5-14	7:00	9" ring	0.822	--	0.849	--	--	--
5-15	8:00	No load	0.849	--	0.819	--	--	--
	9:00	50	0.892	0.043	0.839	0.020	0.032	0.36
5-16	10:45	50	0.892	0.043	0.839	0.020	0.032	0.36
	12:45	W/load	0.900	0.051	0.847	0.028	0.040	0.44
	13:00	W/L, wet	0.900	0.051	0.847	0.028	0.040	0.44
5-17	10:42	" "	0.902	0.053	0.851	0.032	0.043	0.48
5-18	8:10	" "	0.904	0.055	0.857	0.038	0.047	0.52
	10:20	" "	0.904	0.055	0.857	0.038	0.047	0.52
	14:30	" "	0.904	0.055	0.857	0.038	0.047	0.52 ▲
	15:30	No load	0.900	0.051	0.855	0.036	0.044	0.49
REBOUND								

AFTER PERCOLATION DATA

MOISTURE CONTENT DETERMINATION

CONTAINER NUMBER	A-8
MASS OF CONTAINER + WET SOIL	225.5 lbm
MASS OF CONTAINER + DRY SOIL	203.5 lbm
MASS OF CONTAINER	33.5 lbm
MASS OF WATER	22.0 lbm
MASS OF DRY SOIL	170.0 lbm
MOISTURE CONTENT	12.9 %

CONSOLIDATED DRY UNIT WEIGHT

$$= \frac{\text{PLACEMENT DRY UNIT WEIGHT}}{\frac{100 - \%\ \text{SETTLEMENT}}{100}} = \frac{119.9}{\frac{100 - 0.52\ ▲}{100}}$$

$$= 120.5 \text{ lbf/ft}^3$$

NEEDLE NO. ____ NEEDLE READ. ____ PEN. RES. ____ lbf/in²

MOISTURE CONTENT 12.9 % PENETRATION RESISTANCE ____ lbf/in² CONSOLIDATED DRY UNIT WEIGHT 120.5 lbf/ft³

*MAXIMUM LABORATORY DRY UNIT WT. OR OTHER AS SPECIFIED.

REMARKS: ____

GPO 855-159

Figure 7. - Permeability-settlement test data sheet 2 — example.

14.5.3 Carefully level the soil while it is in a loose state.

14.5.4 Compact the layer of soil uniformly with a hand tamper.

14.5.5 Check the uniformity of the thickness of the layer with the straightedge and yardstick or pocket tape.

14.5.6 Continue the compaction process until the soil layer is within ±1/16-inch of the 3-inch thickness.

14.5.7 Scarify the top of the layer with a knife or screwdriver to a depth of approximately 1/8 to 1/4 inch before placing the next layer.

14.5.8 Repeat subparagraphs 14.5.2 through 14.5.7 for two additional layers to produce a 9-inch thick soil specimen. The thickness of the first two layers should be within ±1/16 inch of 6 inches and the thickness of the three layers should be within 1/16 inch of 9 inches.

14.5.9 If the thickness of the specimen after any lift does not fall within the limits given in paragraphs 14.5.6 and 14.5.8 the specimen should be removed from the cylinder and a new specimen compacted with new material.

14.5.10 Remove the load plate, with attached porous disk, from the pan of water and let it drain for about 15 minutes. Using the matchmarks, place the load plate on the specimen while making sure it is in complete contact with the soil.

14.6 Position and read the dial gauges and record as *No Load* readings in the "Settlement Data" section in columns (4) and (6) and label as *No Load* in column (3) as shown on figure 7. The sum of A and B readings is recorded as *Dial Reading A + B, No Load* under *Total* in the "Placement Data" section. Calculate the average of the A and B readings by dividing the *Total* by two, and record under *1/2 Total*. Record the date and time in the appropriate columns.

14.7 Record the following information in the "Placement Data" section as shown on figure 7.

14.7.1 Locate the cylinder area recorded on the Preparation of Permeability Test Specimen Containing Gravel form, line (11) (fig. 3); convert to square inch and record the value as specimen area to the nearest 0.1 in^2.

14.7.2 Record the specified pressure to be applied to the specimen during testing.

14.7.3 Record the required load to be applied to the specimen as determined from the specified pressure and the specimen area.

14.7.4 Record the hydraulic cylinder number and appropriate gauge reading from the spring calibration curve (USBR 1430) corresponding to the required load.

14.7.5 Record the placement dry unit weight as obtained in subparagraph 10.6.

14.8 Complete assembly of bottom reaction plate (with nuts finger tight), four springs, and the top reaction plate, as shown in figure 1.

NOTE 6.–The size of load springs (see subpar. 7.2.10) selected depends on the load required to provide the required pressure on the specimen. For example, if the soil represented by the test specimen is to be placed at a certain level in an embankment dam, the applied pressure should be equivalent to the estimated weight of overlying soil. For compacted soil lining applications, a small pressure of approximately 1 lbf/in^2 would be appropriate. The mass of the load plate with attached porous disk, four springs, and bottom reaction plate will apply about 1 lbf/in^2 pressure on the specimen.

14.9 Place the cylinder of the appropriate hydraulic cylinder (usually 20-ton force) between the bottom and top reaction plates of the permeability apparatus as shown on figures 1 and 2.

14.10 Using the hydraulic pump, increase the pressure in the hydraulic cylinder until the correct pressure gauge reading is achieved.

14.11 Tighten the nuts on the tension rods against the bottom reaction plate. Do not overtighten since that would increase the load on the springs.

14.12 Release the pressure in the hydraulic cylinder and remove from the bottom reaction plate.

14.13 Immediately after the load is applied read dial gauges A and B. Record readings in the "Settlement Data" section in columns (4) and (6) and label with appropriate applied normal pressure in column (3) (fig. 7). Record the date and time.

14.14 Monitor dials A and B until there is less than 0.002-inch change during a 16-hour period. Identify the final reading as *w/load* as shown in column (3) (fig. 7). Maintain the specified load on the load plate by checking it with the hydraulic cylinder (subpar. 14.10 through 14.13) at the end of the first and second hour after load application and daily thereafter—adjusting the load as necessary.

14.15 Close the valve at the bottom of the head tank. (In place of this valve, some tanks have only a clamp on the rubber tubing connecting the head tank and permeability cylinder).

14.16 Open the air cock at the top of the head tank to allow air to escape.

14.17 Open the valve on the inlet at the bottom of the head tank and fill the tank through the bottom.

14.18 After filling the tank, close both the valve on the inlet pipe and the air cock and push the two ends of the connecting tubing onto the intake pipes of the permeability cylinder.

14.19 Open the drain cocks on the permeability cylinder opposite the bottom porous disk at the bottom of the permeability cylinder.

14.20 Open the valve on the inlet pipe at the bottom of the head tank to bleed off air, then close it.

14.21 Adjust the head tank so the bottom of the air intake tube is slightly above the bottom porous disk.

14.22 Open the valve (or clamp) on the line connecting the head tank with the permeability cylinder and allow water to fill the connected tubing and flow slowly through the bottom porous disk.

14.23 Continue flowing water until evidence of air is not in the system.

14.24 Close the drain cocks so water at low hydraulic gradient will permeate slowly upward through the specimen.

NOTE 7.–The hydraulic head to be used during the wetting period depends on the permeability of the soil as placed; it should range from 1 inch or less for specimens having "high" permeability to 1 foot or more for those having "low" permeability.

14.25 Continue permeation until the top porous disk and load plate are completely covered with water or for a period of 3 days, whichever occurs first.

14.26 Read dial gauges A and B after the specimen is wetted. Record these readings as *w/L, wet* as shown on figure 7. Repeat these readings occasionally throughout the test and at any change in hydraulic gradient.

14.27 Calculate the specimen initial thickness and record to the nearest 0.001 inch in the "Placement Data" section as shown on figure 7. For each set of dial readings calculate amount of travel and record accordingly in columns (5) and (7), and average amount and percent settlement and record to the nearest 0.001 inch and 0.01 percent in columns (8) and (9), respectively.

14.28 Calculate the consolidated thickness L', and record the value in the "Placement Data" section as shown on figure 7. Also record the consolidated thickness for each hydraulic gradient as shown on figure 6.

14.29 Pour water into the top of the permeability cylinder until it flows out the overflow.

14.30 Close the valve (or clamp) on the line connecting the head tank to the permeability cylinder.

14.31 Adjust the head tank to obtain the specified hydraulic gradient between the bottom of the air intake tube in the head tank and the overflow pipe on the permeability cylinder. Refill the head tank as instructed in subparagraphs 14.15 through 14.18. Read and record the *Head,* H_{wc} as shown on figure 6.

14.32 Close the air cock and valve on the inlet pipe.

14.33 Lower the water level in the head tank to the top mark (or just below) on the water level indicator by carefully opening and closing the valve on the inlet pipe.

14.34 Note the date, time, and head tank level (to the nearest 0.1 inch) and record in appropriate columns as shown on figure 6. Read and record water and room temperatures as shown in the *Remarks* column of figure 6. Repeat these temperature measurements occasionally throughout the test.

14.35 Start the test by opening the valve (or clamp) on the line leading from the head tank to the permeability cylinder.

NOTE 8.–If head tank is operating properly, the air intake tube remains empty. A rise in water level in the air intake tube usually indicates a leak at the top of the tank which must be corrected. Occasionally, when soil permeability is very low, a slight rise in water level in the air intake tube may result due to changes in temperature or atmospheric pressure. Observations should not be recorded unless the water level in the head tank is very near the bottom of the air intake tube. Also, do not allow the water level in the head tank to fall below the spider on the air intake tube (see fig. X1.3).

14.36 Continue the test until the permeability becomes approximately constant or for a minimum of 10 days. Take daily readings—or more frequently if the flow rate is relatively high—of date, time, and head tank level (to the nearest 0.1 inch) and record in appropriate columns as shown on figure 6. Determine the *Difference in Reading,* R and record as shown on figure 6. Calculate C, CF, and R/t', and record values as shown on figure 6. Calculate the coefficient of permeability, k, as outlined in subparagraph 15.8. Using the following table, record the coefficient of permeability as shown on figure 6.

k, ft/yr	*Record to nearest*
10 to 100	1 ft/yr
100 to 1,000	10 ft/yr
1,000 to 10,000	100 ft/yr
10,000	1,000 ft/yr

Calculate the consolidated dry unit weight and record in the "After Percolation Data" section and record as shown on figure 7.

14.37 Take final dial gauge readings, when the flow rate becomes virtually constant, and record as shown on figure 7.

14.38 If tests using other hydraulic gradients on the specimen are required, repeat the procedure in subparagraphs 14.15 through 14.37.

14.39 When the test is completed, close the valve (or clamp) at the bottom of the head tank on the line leading to the permeability cylinder.

14.40 Release the pressure on the specimen by placing the hydraulic cylinder between the reaction plates; use the hydraulic cylinder and pump to remove the load from the nuts on the bottom reaction plate.

14.41 Remove the hydraulic cylinder, reaction plates, springs, and tension rods.

14.42 Read dials A and B and record as *no load* readings as shown on figure 7. Also, record the date and time.

14.43 Remove the load plate with top porous disk and disconnect the tubes on the permeability intake pipes.

14.44 Remove the entire specimen or a representative portion from the center of the specimen and determine the moisture content in accordance with USBR 5300. Record the moisture content results in the "After Percolation Data" section as shown on figure 7.

15. Calculations

15.1 Calculate the initial specimen thickness.

$$H_i = 9.000 + \frac{1}{2} d_1 - \frac{1}{2} d_2 \qquad (7)$$

where:

H_i = initial specimen thickness, in
9.000 = height of calibration ring, in
d_1 = dial reading A + B, w/ring (fig. 7), in
d_2 = dial reading A + B, no/load (fig. 7), in

15.2 Calculate the amount of *travel* for dial A.

$$S_A = d_A - d_3 \qquad (8)$$

where:

S_A = amount of *travel* (col. 5, fig. 7), in
d_A = any given dial reading for dial A (col. 4, fig. 7), in
d_3 = no load dial reading for dial A (col. 4, fig. 7), in

15.3 Calculate the amount of *travel* for dial B.

$$S_B = d_B - d_4 \quad (9)$$

where:
S_B = amount of *travel* (col. 7, fig. 7), in
d_B = any given dial reading for dial B (col. 6, fig. 7), in
d_4 = no load dial reading for dial B (col. 6, fig. 7), in

15.4 Calculate the average amount of settlement.

$$d_{av} = \frac{S_A + S_B}{2} \quad (10)$$

where:
d_{av} = average amount of settlement (col. 8, fig. 7), which occurred due to wetting and loading (dial gauge readings identified as w/L, wet), inches.

15.5 Determine settlement expressed as a percentage of the initial thickness of the specimen (col. 9, fig. 7).

$$\text{Settlement, \%} = 100 \left(\frac{d_{av}}{H_i} \right) \quad (11)$$

15.6 Calculate the consolidated thickness of the specimen.

$$L' = H_i \pm d_{av} \quad (12)$$

where L' equals consolidated thickness, inches. Add d_{av} to H_i if the specimen expanded. If settlement occurred, subtract d_{av} from H_i.

15.7 Calculate the consolidated dry unit weight, lbf/ft³, corresponding to the last settlement reading before the applied pressure is removed.

(13)

$$\text{Consolidated dry unit weight, lbf/ft}^3 = \frac{\text{placement dry unit weight (lbf/ft}^3\text{)}}{\frac{100 - \text{settlement \%}}{100}}$$

15.8 Calculate the coefficient of permeability as follows, from Darcy's Law.

$$Q = k\, i\, A \quad (14)$$

then

$$k = \frac{Q}{i\, A}$$

since

$$Q = \frac{V}{t} \quad \text{and} \quad i = \frac{H_{wc}}{L}$$

thus

$$k = \frac{\frac{V}{At}}{\frac{H_{wc}}{L}}$$

or

$$k = \frac{VL}{A\, t\, H_{wc}}$$

where:
k = coefficient of permeability, ft/yr
V = volume of water discharge, ft³ in time t
L = consolidated thickness (or length) of specimen, ft
A = area of specimen, ft²
t = elapsed time during measurement, yr
H_{wc} = constant head, equals difference between headwater and tailwater levels, ft

15.9 To simplify the computations, the general equation given above has been partially solved and constants are introduced as follows.

$$V = \frac{RF}{28{,}320} \quad (15)$$

where:
R = difference in readings of head tank levels, in
F = calibration factor for the head tank, cm³/in
28,320 = change from cm³ to ft³

15.10 Calculate the consolidated thickness of the specimen.

$$L = \frac{L'}{12} \quad (16)$$

where:
L' = consolidated thickness of the specimen, in
12 = change from inches to feet

15.11 Calculate the elapsed time between head tank readings.

$$t = \frac{t'}{8{,}760} \quad (17)$$

where:
t' = elapsed time between head tank readings, hours
8,760 = change from hour to year

15.12 The area A equals 1.97 ft² for a 19-inch i.d. permeability cylinder.

15.13 Substituting the expressions from subparagraphs 15.9 through 15.12 into the equation of subparagraph 15.8 yields:

$$k, \text{ ft/yr} = 0.013 \left(\frac{RFL'}{t'\, H_{wc}} \right) \quad (18)$$

where:

$$0.013 = \frac{8{,}760}{(28{,}320)\ 12\ (1.97)}$$

15.14 Since the value L'/H_{wc} is constant for any particular head, let

$$C = 0.013 \left(\frac{L'}{H_{wc}} \right) \quad (19)$$

15.15 This results in the following equation for the coefficient of permeability.

$$k, \text{ ft/yr} = C\, F \left(\frac{R}{t'} \right) \quad (20)$$

16. Report

16.1 The report is to consist of the following completed and checked forms:

"Preparation of Permeability Test Specimen Containing Gravel" (fig. 3)
"Added Water Determination" (fig. 5)
"Compaction Data for Permeability Test Specimen Containing Gravel" (fig. X2.1)
"Permeability–Settlement Test Data Sheet 1" (fig. 6)
"Permeability–Settlement Test Data Sheet 2" (fig. 7)

16.2 All calculations are to show a checkmark.

APPENDIX

X1. EQUIPMENT DRAWINGS

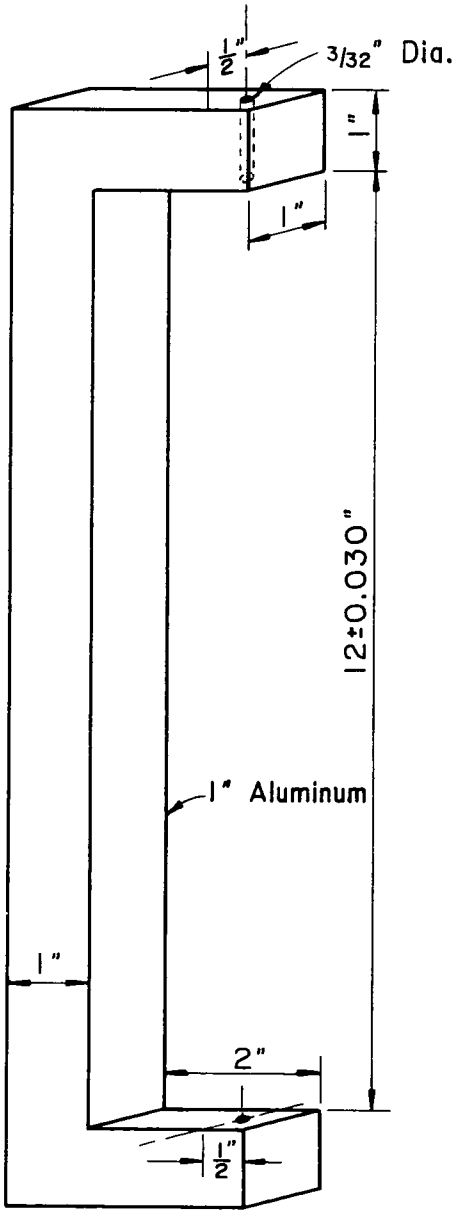

Figure X1.1. – Dial indicator reference bracket for 19-inch permeability cylinder.

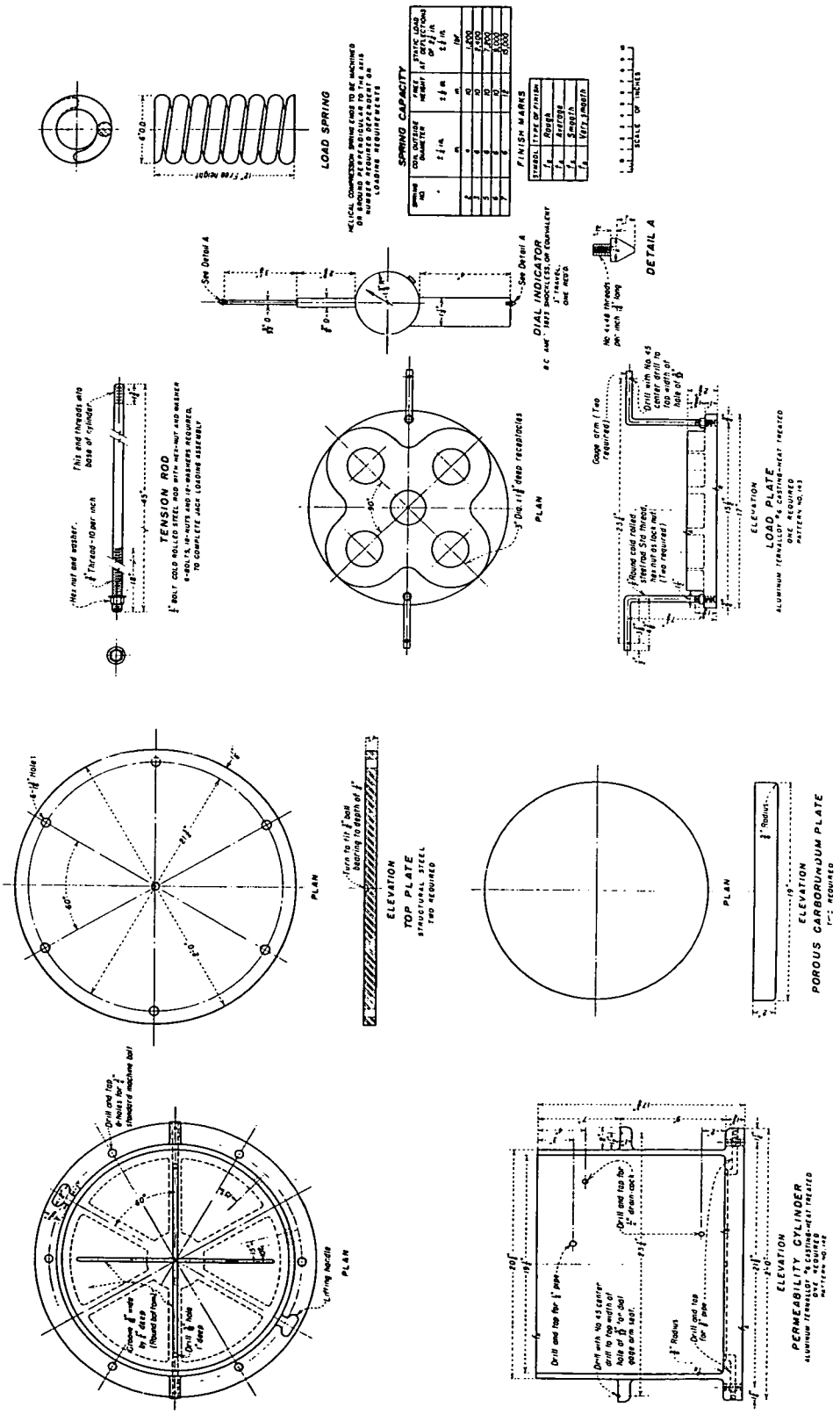

Figure X1.2. – 19-inch inside diameter permeability aluminum cylinder details. 101-D-192

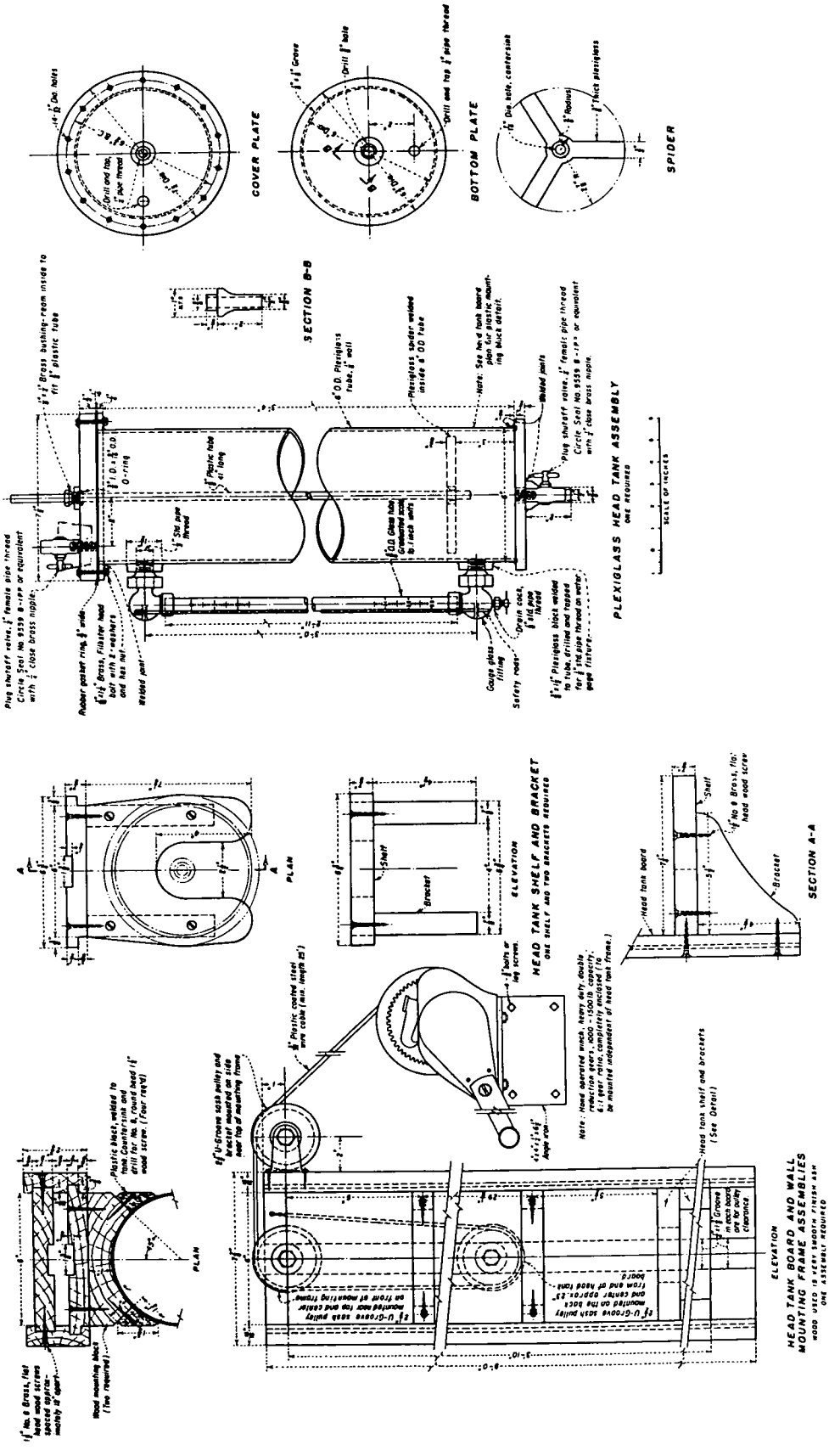

Figure X1.3. – 19-inch inside diameter permeability apparatus — Plexiglas head tank and mounting frame. 101-D-193

X2. PREPARING PERMEABILITY TEST SPECIMENS USING THE LARGE MECHANICAL COMPACTOR

X2.1 Scope

X2.1.1 This appendix outlines the procedure for preparing permeability test specimens using the large mechanical compactor described in USBR 5515.

X2.1.2 This appendix also describes the calculations required to prepare specimens of three lifts—of approximately equal dry unit weights.

X2.1.3 The procedure described in USBR 5515 is followed through the compaction of the first lift of the specimen. The thickness of the first lift is determined, then used to calculate the dry mass required for the second lift which will duplicate the dry unit weight obtained in the first compacted lift. After compacting the second lift, this procedure is repeated for the third lift.

X2.2 Procedure

X2.2.1 All data are to be recorded on the "Compaction Data for Permeability Test Specimen Containing Gravel" form as shown on figure X2.1.

X2.2.2 Review and perform applicable paragraphs in USBR 5515.

X2.2.3 Record the following information from the "Preparation of Permeability Test Specimen Containing Gravel," form (fig. 3) onto "Compaction Data for Permeability Test Specimen Containing Gravel" form.

X2.2.3.1 Record the percent retained of each size of plus No. 4 and the percent minus No. 4 (4.75 mm) in column (a) on lines (2a) through (2e).

X2.2.3.2 Record the absorption of the plus No. 4 and desired compaction moisture content of the minus No. 4 material in column (b) on lines (2a) through (2e).

X2.2.3.3 Record the mass of dry material required for the first lift on line (6a).

X2.2.4 Measure the depth from the top of the permeability cylinder to the top of the bottom porous disk. Record the value to the nearest 1/32 (0.030) inch on line (3a).

X2.2.5 Place and compact the first lift of the specimen as described in USBR 5515.

X2.2.6 Using straight edge and yardstick, determine the depth from the surface of the compacted lift to the top of the permeability cylinder at 10 locations selected at random on the surface of the lift. Record the values to the nearest 1/16 inch on the back of the form as "Depth to surface of compacted lift."

X2.2.7 Determine the average depth by summing the individual depth measurements and dividing by 10. Record the value (to the nearest 0.01 inch) on the back of the data form as *Average depth*, and on line (3b) on the front of data form as *Top of permeability cylinder to top of first lift.*

X2.2.8 Calculate the thickness of the first lift.

$$3c = 3a - 3b \qquad \text{(X2.1)}$$

where:

3c = thickness of the first lift, in
3a = measurement from top of the permeability cylinder to top of bottom porous disk, in
3b = measurement from top of permeability cylinder to top of first lift, in

Record the value to the nearest 1/16 inch on line (3c) on the form as *Thickness of first lift.*

X2.2.9 Verify that the height of the specimen falls within the following limits:

X2.2.9.1 Thickness after first lift 3±1/16 inches
X2.2.9.2 Thickness after second lift 6±1/16 inches
X2.2.9.3 Thickness after third lift 9±1/16 inches

X2.2.10 If the thickness of the specimen after any lift does not fall within the limits given in paragraph X2.2.9 the specimen should be removed and a new specimen compacted with new material.

X2.2.11 Determine the mass of dry material required for the second lift.

$$m_2 = m_1 \frac{[6.000 - 3c]}{3c} \qquad \text{(X2.2)}$$

where:

m_2 = dry mass in second lift, lbm
m_1 = dry mass in first lift, lbm
6.000 = constant, in
3c = thickness of first lift, in

Record the value to the nearest 0.01 lbm on line (6b) on the form as *Dry mass in second lift*, and on line (1) under "Lift No. 2" of the data form as *Dry mass, m_2.*

X2.2.12 Determine the mass of SSD (saturated surface dry) plus No. 4 (4.75 mm) and moistened minus No. 4 material for the second lift of the test specimen.

X2.2.13 Calculate the dry mass of each gravel size and the minus No. 4 material as follows:

$$c = \frac{a\, m_2}{100} \qquad \text{(X2.3)}$$

where:

c = dry mass, lbm
a = percent retained on each screen size or the percent of minus No. 4 (4.75 mm) material, %
m_2 = dry mass in second lift, lbm
100 = convert from percent to decimal

Record the values to the nearest 0.01 lbm in column (c), lines (2a) through (2e) on the data form as *Dry mass.*

X2.2.14 Sum the individual dry mass of each material size. Record the results to the nearest 0.01 lbm in column (c) on line (2f) on the form as *Total.*

X2.2.15 Calculate the wet masses of each material size.

$$d = c\left(1 + \frac{b}{100}\right) \qquad \text{(X2.4)}$$

where:

d = wet mass of each screen size or minus No. 4 material (4.75 mm), lbm

7-2395 (12-86)
Bureau of Reclamation

COMPACTION DATA FOR PERMEABILITY TEST SPECIMEN CONTAINING GRAVEL

Designation USBR 5605-89

SAMPLE NO.	PROJECT	FEATURE
29L-15	Example	Example
TESTED BY DATE	COMPUTED BY DATE	CHECKED BY DATE

		LIFT NO. 2			LIFT NO. 3		
(1)		DRY MASS, m_2 = 57.08 lbm			DRY MASS, m_3 = 56.80 lbm		
SCREEN SIZE (in)	(a) PERCENT RETAINED (%)	(b) MOISTURE CONTENT1/ (%)	(c) DRY MASS (lbm) (a) m_2/100	(d) WET MASS (lbm) (c) [1+(b)/100]	(e) CUM. WET MASS (lbm) (d)+(e) prev	(f) DRY MASS (lbm) (a)m_3/100	(g) WET MASS (lbm) (f) [1+(b)/100]	(h) CUM. WET MASS (lbm) (g)+(h) prev
(2a) 1-1/2	4.3	1.6	2.45	2.49	2.49	2.44	2.48	2.48
(2b) 3/4	8.7	1.6	4.97	5.05	7.54	4.94	5.02	7.50
(2c) 3/8	9.6	1.6	5.48	5.57	13.11	5.45	5.54	13.04
(2d) NO. 4	12.8	1.6	7.31	7.43	20.54	7.27	7.39	20.43
(2e) -NO. 4	64.6	14.5	36.87	42.22	62.76	36.69	42.01	62.44
(2f) TOTAL	100		57.08	62.76		56.80	62.44	

100 CONVERTS PERCENT TO DECIMAL
1/PERCENT ABSORPTION FOR GRAVEL SIZES, ACTUAL MOISTURE CONTENT FOR MINUS NO. 4 MATERIAL.

MEASUREMENTS

(3a) TOP OF PERMEABILITY CYLINDER TO BOTTOM POROUS DISC	14.03 in
(3b) TOP OF PERMEABILITY CYLINDER TO TOP OF 1st LIFT	10.97 in
(3c) THICKNESS OF FIRST LIFT (3a) - (3b)	3.06 in
(4a) TOP OF PERMEABILITY CYLINDER TO TOP OF SECOND LIFT	7.98 in
(4b) HEIGHT OF SPECIMEN AFTER SECOND LIFT (3a) - (4a)	6.05 in
(4c) THICKNESS OF SECOND LIFT (3b) - (4a)	2.99 in
(5a) TOP OF PERMEABILITY CYLINDER TO TOP OF THIRD LIFT	4.97 in
(5b) HEIGHT OF SPECIMEN AFTER THIRD LIFT (3a) - (5a)	9.06 in
(5c) THICKNESS OF THIRD LIFT (4a) - (5a)	3.01 in

MASS PER LIFT (lbm)

(6a) DRY MASS IN FIRST LIFT: 59.41 lbm (m_1)

(6b) DRY MASS IN SECOND LIFT: $\frac{(6a)\,[6.000-(3c)]}{(3c)} = \frac{59.41\quad[6.00-3.06]}{(3c)} = 57.08$ lbm (m_2)

(6c) DRY MASS IN THIRD LIFT: $\frac{(6a)+(6b)}{(3c)+(4c)}\,[9.000-(3c)-(4c)] =$ (m_3)

$$\frac{59.41 + 57.08}{3.06 + 2.99}\,[9.000 - 3.06 - 2.99] = 56.80 \text{ lbm}$$

Figure X2.1. – Compaction data for permeability test specimen containing gravel — example.

LIFT NO.	DEPTH TO SURFACE OF COMPACTED LIFT (in)										AVERAGE DEPTH (in)
	1	2	3	4	5	6	7	8	9	10	
1	11 1/16	11 9/16	10 12/16	10 13/16	11 9/16	11 1/16	11 2/16	10 12/16	11 9/16	11 2/16	10.97
2	8 2/16	8 9/16	7 12/16	8 3/16	8 1/16	8 9/16	7 13/16	7 12/16	8 9/16	8 1/16	7.98
3	5 9/16	4 13/16	4 12/16	5 9/16	5 1/16	4 12/16	5 9/16	5 2/16	5 2/16	5 1/16	4.97

Figure X2.1. – Compaction data for permeability test specimen containing gravel — example (back of form) — Continued.

b = absorption of plus No. 4 (4.75 mm) or moisture content of minus No. 4 (4.75 mm) material, %
c = dry mass, lbm
100 = convert from percent to decimal

Record the values to the nearest 0.01 lbm in column (d) on lines (2a) through (2e) on the form as *Wet mass.*

X2.2.16 Sum the individual wet mass for each material size. Record the result to the nearest 0.01 lbm in column (d) on line (2f) on form as *Total.*

X2.2.17 Calculate the cumulative wet mass of the sample.

$$e = d + e_{prev} \qquad \text{(X2.5)}$$

where:
e = cumulative wet mass, lbm
d = wet mass, lbm
e_{prev} = cumulative wet mass of previous material size, lbm

Record the values to the nearest 0.01 lbm in column (e), lines (2a) through (2e) on the data form as *Cum. wet mass.*

X2.2.18 Prepare the material required for the second lift using the data calculated in subparagraph X2.2.17. Place and compact the second lift using the principles procedures specified in USBR 5515.

X2.2.19 Determine the thickness of the compacted specimen using the procedures described in subparagraphs X2.2.6 through X2.2.10. Record the data and calculations on lines (4a), (4b), and (4c).

X2.2.20 Determine the mass of soil required for the third lift.

$$m_3 = \frac{m_1 + m_2}{3c + 4c}(9.000 - 3c - 4c) \qquad \text{(X2.6)}$$

where:
m_3 = mass of dry material in third lift, lbm
m_1 = mass in first lift, lbm
m_2 = mass in second lift, lbm
3c = thickness of first lift, in
4c = thickness of second lift, in
9.000 = constant; i.e., final desired thickness of specimen, in

Record the value to 0.01 lbm on line (6c) on form as *Dry mass in third lift* and on line (1) under "Lift No. 3" on the form as *Dry mass,* m_3.

X2.2.21 Determine the mass of SSD plus No. 4 (4.75 mm) and moistened minus No. 4 material for the third lift of the test specimen as outlined in subparagraphs X2.2.12 through X2.2.17. Record the values in columns (f), (g), and (h) on lines (2a) through (2e).

X2.2.22 Prepare the material required for the third lift using the data calculated in subparagraph X2.2.20. Place and compact the specimen using the procedures specified in USBR 5515.

X2.2.23 Determine the final thickness of the compacted specimen using the procedures described in subparagraphs X2.2.6 through X2.2.10. Record the values on lines (5a), (5b), and (5c) as shown on the form.

X2.2.24 Remove the load plate with attached porous disk from the pan of water and let it drain for about 15 minutes. Using the matchmarks, place the load plate on the specimen making sure it is in complete contact with the soil.

UNITED STATES DEPARTMENT OF THE INTERIOR
BUREAU OF RECLAMATION

USBR 5610-89

PROCEDURE FOR

DETERMINING PERMEABILITY OF SOIL BY THE BACK-PRESSURE TEST METHOD

INTRODUCTION

This procedure is under the jurisdiction of the Geotechnical Services Branch, code D-3760, Research and Laboratory Services Division, Denver Office, Denver, Colorado. The procedure is issued under the fixed designation USBR 5610. The number immediately following the designation indicates the year of acceptance of the year of last revision.

1. Scope

1.1 This procedure describes the test method to be used for determining the coefficient of permeability of a soil specimen when a high degree of saturation has been achieved using back pressure, followed by flow of water through the soil in a back pressure (flexible-wall) permeameter.

2. Auxiliary Tests

2.1 A test sample must be processed in accordance with USBR 5205 prior to performing this procedure. A soil specimen may be prepared in accordance with either USBR 5210 or 5215. As a part of performing this procedure, unit weight of the specimen must be obtained in accordance with USBR 5370 and moisture content must be determined in accordance with USBR 5300.

3. Applicable Documents

3.1 *USBR Procedures*:
USBR 1000 Standards for Linear Measurement Devices
USBR 1007 Calibrating Dial Indicators
USBR 1008 Calibrating Linear Variable Differential Transformers
USBR 1009 Calibrating Compaction Molds
USBR 1012 Calibrating Balances or Scales
USBR 1040 Calibrating Pressure Gauges
USBR 1050 Calibrating Pressure Transducers
USBR 1055 Calibrating Differential Pressure Transducers
USBR 1455 Calibrating Volume and Drain Tubes
USBR 5205 Preparing Soil Samples by Splitting or Quartering
USBR 5210 Preparing Compacted Soil Specimens for Laboratory Use
USBR 5215 Preparing Soil Specimens for Laboratory Use From Undisturbed Samples
USBR 5300 Determining Moisture Content of Soil and Rock by the Oven Method
USBR 5320 Determining Specific Gravity of Soils
USBR 5370 Determining Unit Weight of Cylindrical Soil Specimens
USBR 5525 Determining the Minimum Index Unit Weight of Cohesionless Soils
USBR 5530 Determining the Maximum Index Unit Weight of Cohesionless Soils

4. Summary of Method

4.1 The back pressure permeability method involves attaining a high degree of saturation by increasing the pore water pressure (back pressure) of the specimen to compress free air in the voids and to increase the amount of air that can be dissolved in the pore fluid. End plates, with porous inserts, are placed on each end of a specimen. A membrane is placed over the specimen and is sealed to the end plates. The end plates—with porous inserts—and the membrane form a flexible-wall permeameter. The sealed specimen is then placed in a chamber and is confined by pressurized water in the chamber. To maintain a positive effective lateral pressure, the chamber (lateral) pressure is kept slightly higher than the back pressure.

4.2 Between application of lateral pressure increments, de-aired water (usually under gravity head) flows through the specimen while the increased back pressure is maintained. This procedure serves a twofold function (1) to flush out air remaining in the specimen, and (2) to fill the space formerly occupied by air not dissolved in the pore water with de-aired water.

4.3 When Skempton's pore pressure coefficient B is determined to be at or above 0.92, a nondischarging special falling headwater-rising tailwater permeability test is performed. De-aired water—usually under gravity head only—is percolated through the specimen from a falling head in one head tank (headwater) to a rising head in a second head tank (tailwater) of the same nominal size. The head tanks and specimen form a closed system. The test is continued until steady state flow is achieved through the specimen. This may require reversing the flow of water through the specimen by alternate use of differential heads in headwater and tailwater tanks.

4.4 During testing, elevated air pressure (back pressure) is maintained over the water in both headwater

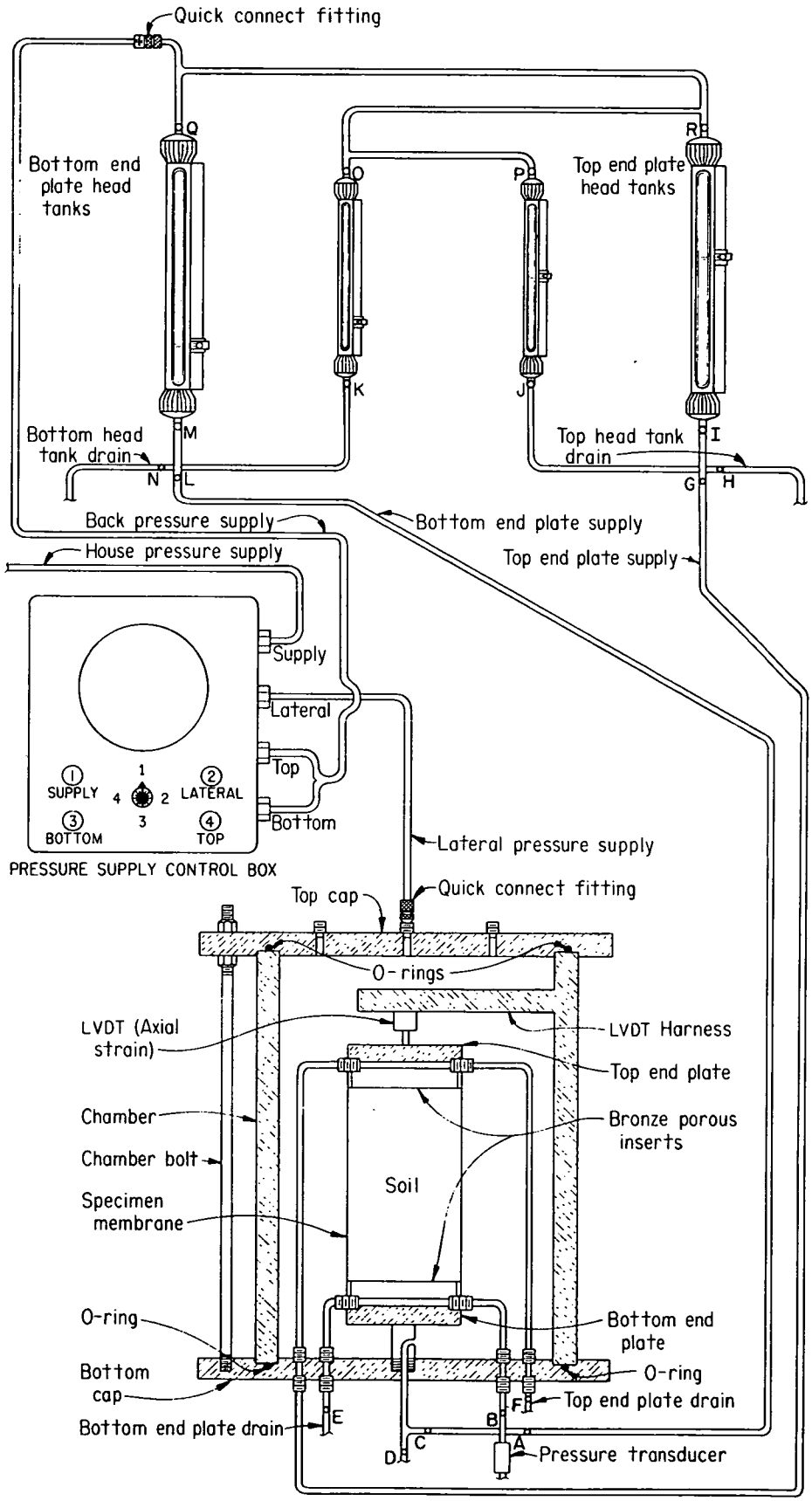

Figure 1. – Back pressure permeability schematic.

and tailwater tanks. The pressure is usually set equal in both tanks to prevent air from coming out of solution as water leaves the specimen. However, differential air pressures may be set between the tanks to augment the gravity head.

5. Significance and Use

5.1 The coefficient of permeability is an important soil parameter. Accurate measurement of permeability under varying stress conditions is necessary for proper design. The back pressure permeability test method allows assessment of this parameter at various combinations of effective confining pressure and hydraulic gradients. Generally, this procedure results in a more reliable and accurate coefficient of permeability — particularly for fine-grained soils—than is obtained from falling head or constant head tests in rigid-wall permeameters where provisions are not available to remove air trapped in the soil voids.

6. Terminology

6.1 Definitions are in accordance with USBR 3900. Terms of particular significance are:

6.1.1 *Coefficient of Permeability* (k).–The rate of discharge of water under laminar flow conditions through a unit cross-sectional area of a porous medium under a unit hydraulic gradient and standard temperature conditions (usually 20 °C) (ASTM definition).

6.1.2 *Hydraulic Gradient* (i).–The loss of hydraulic head per unit distance of flow, $\Delta H/\Delta L$ (ASTM).

6.1.3 *Percent Saturation* (S_r).–The ratio, expressed as a percentage, of (1) the volume of water in a given soil or rock mass, to (2) the total volume of intergranular space (voids) (ASTM).

6.1.4 *Permeability.*–The capacity of a rock or soil to conduct liquid or gas.

6.1.5 *Pore Pressure* (u).–Stress transmitted through the pore water (water filling the voids of soil) (ASTM).

6.2 Terms not included in USBR 3900 specific to this procedure are:

6.2.1 *Back Pressure.*–Pressure applied to the pore fluid in a specimen to increase the degree of saturation by dissolving air in the pore spaces into the pore fluid.

6.2.2 *Effective Pressure.*–The numerical difference between lateral pressure and back pressure.

6.2.3 *Head.*–Pressure at a point in a liquid, expressed in terms of the vertical distance of the point below the surface of the liquid (ASTM).

6.2.4 *Lateral Pressure* (confining pressure, cell pressure).–Pressure applied to the fluid in a chamber surrounding a specimen enclosed in a membrane and end plates.

6.2.5 *Skempton's Pore Pressure Coefficient B.*–The pore pressure coefficient B is the ratio of the increase in pore pressure in undrained loading due to an increase in lateral pressure.

7. Apparatus

7.1 *General Apparatus*:

7.1.1 *Applicators.*–Cotton-tipped applicators, about 6 inches long.

7.1.2 *Axial Deformation Indicator.*–The axial deformation indicator should be a dial indicator or LVDT (linear variable differential transformer) having 0.001 inch resolution and a travel range of at least 20 percent of the initial height of the test specimen. Other measuring devices meeting these requirements for precision and range may be used. The device must be waterproof.

7.1.3 *Balance or Scale.*– Typical balances or scales used for this designation are:

Application	*Readable to*	*Approximate capacity*
Moisture content	0.1 g	1000 g
Mass of compacted specimen	0.1 g	4000 g

7.1.4 *Basket.*–A brass wire basket, No. 6 screen or finer, container large enough to hold a 3.25-inch diameter by 4-inch high specimen.

7.1.5 *Drying Oven.*–An oven, thermostatically controlled, preferably of the forced-draft-type, and capable of maintaining a uniform temperature of 230±9 °F (110±5 °C) throughout the drying chamber.

7.1.6 *Pi Tape.*–A scaled pi (π) tape, 2 to 12 inches outside diameter, readable to 0.001 inch.

7.1.7 *Pressure Measurement Device.*–Pressure gauge or electrical transducer having a capacity 200 lbf/in^2 with data acquisition system, accurate to ±0.25 percent of full range, and associated electronic equipment.

7.1.8 *Tubing.*–Flexible tubing capable of withstanding a pressure of 200 lbf/in^2. Clear flexible tubing should be used so that visual inspection confirms that air bubbles are not present in the system.

NOTE 1.–The pressures given in this procedure are for test systems operational in the Bureau's Denver Office Geotechnical Laboratory. Other test systems may have different pressure requirements.

7.1.9 *Wrench.*–Torque wrench of 150 ft-lbf capacity graduated in 5 ft-lbf increments.

7.1.10 *Vacuum Pump.*–Hand-operated vacuum pump having a minimum capacity of 30 inches of mercury.

7.1.11 *Vacuum Source.*–Source to provide vacuum to approximately 20 lbf/in^2.

7.1.12 Water bulb with stem.

7.2 *Equipment Unique to this Procedure* (figs. 1, 2, and 3):

7.2.1 *Pressure chamber assembly* (figs. X1.1 and X1.2).–An aluminum pressure cylinder 14-inches high, 8-inches i.d. (inside diameter), and 9-inches o.d. (outside diameter), top and bottom caps to fit on the ends of the cylinder, two 3.25-inch diameter specimen end plates containing porous bronze inserts, plumbing fixtures, and an LVDT support bracket. The top and bottom caps are held together by four equally spaced tie-down bolts.

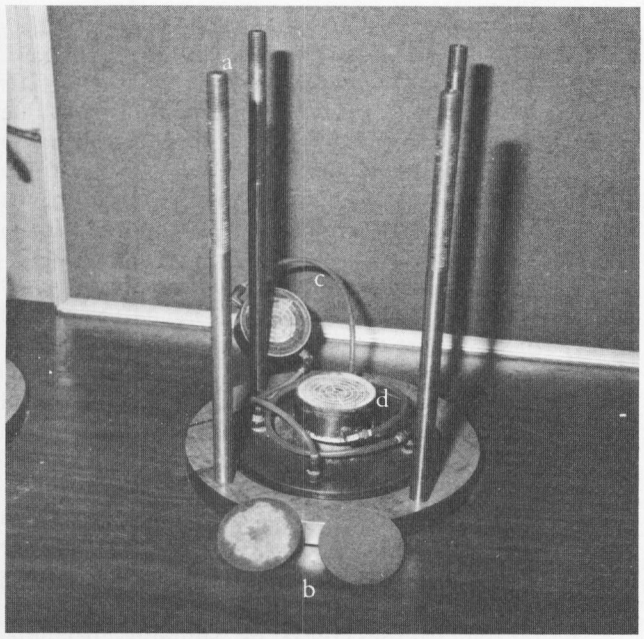

(a) Pressure chamber components–exposed. a) top cap tie down rods (4), b) bronze porous inserts, c) top end plate, and d) bottom end plate.

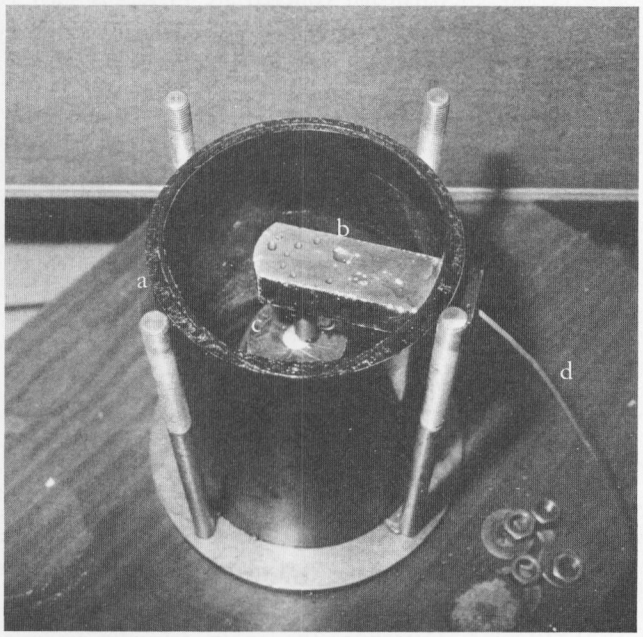

(b) Pressure chamber assembly. a) pressure chamber cylinder, b) LVDT support bracket, c) LVDT casing, and d) LVDT wiring harness.

Figure 2. – Back pressure permeability chamber assembly components.

7.2.2 *Head Tanks* (fig. X1.3).–Two sets of plastic head tanks; one set containing two each of 2-inch nominal i.d., and a second set containing two each of 15-mm nominal i.d., all head tanks graduated to 0.1 inch. The head tanks should be capable of withstanding 150-lbf/in^2 pressure.

7.2.3 *Vacuum Cylinder for Membrane Placement.*–An anodized aluminum cylinder having a valve threaded into a hole in the side. The cylinder is to be large enough to fit over a specimen 3.25-inches diameter by about 4-inches high.

7.2.4 *Gauge Block.*–A stainless steel gauge block measuring 4.000±0.001 inches long.

7.2.5 *Dial Gauge Assembly.*–A dial gauge graduated to 0.001 inch, with stand, to determine the height of the specimen.

7.2.6 *Plastic End Plates.*–Solid plastic end plates, about 1-inch thick by 3.25-inch diameter to be placed on the specimen ends prior to placement of the specimen for the permeability test.

7.2.7 *O-Ring Expander.*–Approximately 3-inch diameter split ring-shaped O-ring expander to place O-rings on specimen.

7.2.8 *O-Rings.*–Two 0.210-inch diameter by 8.225-inch i.d. O-rings to seal the caps to the ends of the pressure cylinder and four 0.278-inch diameter by 2.984-inch i.d. O-rings to seal the specimen membrane to the specimen end plates.

7.2.9 *Specimen Membrane.*–Rubber membrane, 3.25-inch diameter by 6-inch long, and 0.03-inch thick, for placement around the specimen.

8. Reagents and Materials

8.1 *Permeant Water.*–Tapwater that is free of acids, alkalies, or oils, and suitable for drinking should be used for performing the procedure.

8.1.1 *De-Aired Water.*–It is recommended that de-aired water be used to aid in removing as much air from the test specimen as possible. The water shall be de-aired by a vacuum method and stored in a vacuum to prevent air from redissolving into the water.

8.1.2 *Calcium Sulfate Solution.*–An aqueous solution of 0.005 N (normal) calcium sulfate in distilled water may be used for the permeant water.

8.2 *Lubricant.*–Heavy consistency, high vacuum, silicon lubricant compound for sealing O-rings.

8.3 *Plasticene Modeling Clay.*–Used to hold and seal the LVDT core in place.

9. Precautions

9.1 *Safety Precautions*:

9.1.1 Safety glasses must be worn by all personnel in the vicinity of back pressure permeability apparatus during application of pressure.

9.1.2 The pressure capacity of the equipment must be prominently posted at the equipment locations; this capacity must not be exceeded.

9.1.3 Clear, rigid plastic shields must be attached in front of volume tubes and head tanks to protect the operator against flying particles in the event of explosion of pressurized equipment (see fig. X1.3).

9.1.4 Pressures should be applied slowly to allow time for stresses in the equipment and specimen to adjust and equalize.

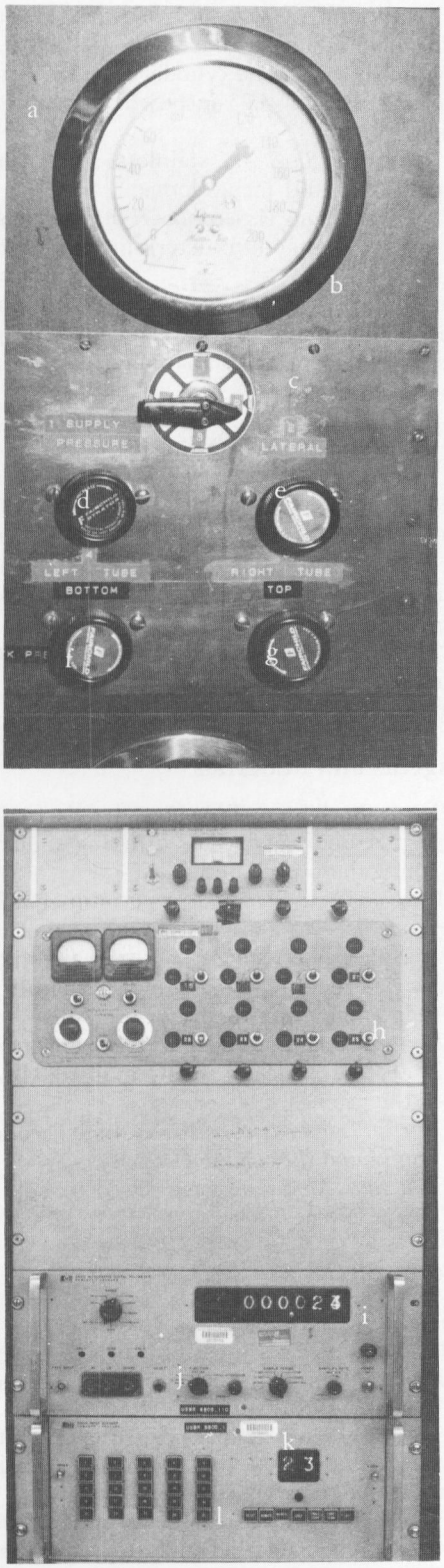

Figure 3. – Pressure control box and data aquisition system for back pressure permeability testing. a) pressure control box, b) pressure gauge, c) pressure function selector, d) supply regulator, e) lateral regulator, f) bottom regulator, g) top regulator, h) balance controls, i) voltmeter readout, j) function selector, k) period selector, and l) channel selector.

9.1.5 The floor should be kept dry to prevent electrical shocks to personnel and to minimize slipping hazard.

9.2 *Technical Precautions*:

9.2.1 *Seepage Consolidation.*–Soft to firm, fine grained soil specimens may undergo seepage consolidation when the permeant fluid is percolated through the specimen. Excessive consolidation of the specimen can result in a coefficient of permeability inaccurate by up to two orders of magnitude.

9.2.2 *Soil-Permeant Chemical Interaction.*–Interaction of a soil with the permeant fluid should be assessed when using laboratory test results for determining seepage under field conditions.

9.2.3 *Test System Leakage.*–Loss of permeant fluid from the test system through leakage can result in an erroneous coefficient of permeability.

9.2.4 *Plugging of Porous Insert.*–Continuous flow from one head tank to the other may move fines from the specimen into the porous insert, thereby reducing the permeability of the insert. This can result in an erroneous coefficient of permeability.

9.2.5 Due to the effects of sampling, handling, processing, and testing on some materials, results of this test may not reflect in-place conditions or the properties of the material after processing and placement during construction. Of particular concern are materials such as soft and/or friable decomposed granite, sandstone, shale, limestone, claystone, etc. or soils affected by air and/or oven drying. Such materials must be identified before processing and the person requesting the test should verify whether standard procedures are to be followed, whether modifications are appropriate, or whether the materials should be processed and tested at all. Cautionary statements must be made on test data forms and in reporting the test data.

10. Sampling, Test Specimens, and Test Units

10.1 Prepare a test specimen as follows.

10.1.1 *Undisturbed Specimen*:

10.1.1.1 Prepare a 3.25-inch diameter by 4.0-inch high undisturbed specimen in accordance with USBR 5215.

NOTE 2.–The top and bottom of a specimen should be identified relative to position as oriented in the undisturbed sample from which it was cut. Throughout the test, the identity should be maintained by numbers or letters placed on the specimen membrane.

10.1.1.2 Determine the length, diameter, volume, and dry mass of the specimen as described in USBR 5370 or 5210. Record the values of length, volume, and dry mass on figure 4 (data sheet 2) lines (e), (f), and (g).

10.1.1.3 Seal the specimen in a membrane and blank end plates as described in USBR 5215.

10.1.2 *Compacted Specimens*:

10.1.2.1 Obtain about 4 lbm of dry soil by reducing and quartering in accordance with USBR 5205.

10.1.2.2 Prepare a 3.25-inch diameter by 4.00-inch high specimen in accordance with USBR 5210. Compact the specimen in four lifts.

7-2412(3-89) Bureau of Reclamation

BACK-PRESSURE PERMEABILITY – DATA SHEET 2

Designation USBR 5610- 8 9

SAMPLE NO. 1	SPECIMEN NO 1	PROJECT Example	FEATURE Example
TESTED BY	DATE	COMPUTED BY DATE	CHECKED BY DATE

Initial Specimen Conditions

(e) - Length	3.942	in
(f) - Volume	32.5	in^3
(g) - Dry mass	1.940	lbm
(h) - Specific gravity	2.62	
(i) - Volume of solids; (27.68 6/ (g)] / (h)	20.496	in^3
(j) - Volume of voids; (36) 7/ (i)	11.683	in^3

NOTES:

* Subscript L denotes initial reading, subscript i denotes any current reading

1/ Constant to convert decimal to percent

2/ Constant to convert in/min to ft/yr; (1 ft/12 in)(60 min/1 hr)(24 h/1 day)(365 day/1 yr)

3/ Convert and applied pneumatic head to equivalent hydraulic head, add to col. (18) and (23)

4/ Temperature Coefficient, R_T, $R_T = \mu_T / \mu_{20}$

5/ Constant to convert ft^3 to in^3; ($1728\ in^3 / 1\ ft^3$)

6/ Constant to convert lbm to ft^3, ft^3 to in^3; ($1\ ft^3/62.43$ lbm)($1728\ in^3/1\ ft^3$)

7/ Value represents consolidated void ratio prior to permeability testing

	Axial Deformation* $[(17_f) - (7_f)]$ (a)	Average Axial Strain* $[100\delta/(11_f)]/e$	Specimen Area* $(11)/[(e) - (11_f)]$	Specimen Volume Change* $[(5_f - 1) - (5_f)]$ (c) + $[(6_f - 1) - (6_f)]$ (b)	Specimen Volume* $(11) - (14_f)$	Segment Duration* $(2_f - (2_i - 1)$	Geometric - Time Factor $(4.380 \times 10^{-4})2/[(e) - (11_f)](d)/(13_f)(16_f)$	Direction of Flow: Top to Bottom — Initial Hydraulic Head* 3/ $(6_i - 1) - (5_i - 1)$	Top to Bottom — Final Hydraulic Head* 3/ $(6_f) - (5_f)$	Top to Bottom — Hydraulic Head Ratio* $(18_f)/(19_f)$	Top to Bottom — Inflow Volume* $[(5_f - 1) - (5_i - 1)]$ (c)	Top to Bottom — Outflow Volume* $[(6_i - 1) - (6_f)]$ (b)	Bottom to Top — Initial Hydraulic Head* 3/ $(5_i - 1) - (6_i - 1)$	Bottom to Top — Final Hydraulic Head* 3/ $(5_f) - (6_f)$	Bottom to Top — Hydraulic Head Ratio* $(23_f)/(24_f)$	Bottom to Top — Inflow Volume* $[(6_f) - (6_i - 1)]$ (b)	Bottom to Top — Outflow Volume* $[(5_i - 1) - (5_f)]$ (c)	Effective Confining Pressure* $(3_f) - (4_f)$	Hydraulic Gradient* Initial $[(18_i)$ or $(23_i)]/[(e) - (11_i - 1)]$	Hydraulic Gradient* Final $[(19_f)$ or $(24_f)]/[e - (11_f - 1)]$	Coefficient of Permeability* K_T Flow: T – B $(17_f)\ln(20_f)$	Coefficient of Permeability* K_T Flow: B – T $(17_f)\ln(25_f)$	Temperature Correction Coefficient 4/ R_T	Coefficient of Permeability K_{20}* $[(31_f)$ or $(32_f)](33_f)$	Dry Unit Weight* $(17285/(g)]/(15_f)$	Void Ratio* $[(15_f)/(i)] - 1$	Void Ratio Function* $[(36_f)^{3}]/[1 + (36_f)]$	Inflow - Outflow Ratio* $(21_f)/(22_f)$ or $(26_f)/(27_f)$
	in	%	in^2	in^3	in^3	min	ft/yr	in	in		in^3	in^3	in	in			in^3	lbf/in^2			ft/yr	ft/yr		ft/yr	lbf/ft^3			
	(11)	(12)	(13)	(14)	(15)	(16)	(17)	(18)	(19)	(20)	(21)	(22)	(23)	(24)	(25)	(26)	(27)	(28)	(29)	(30)	(31)	(32)	(33)	(34)	(35)	(36)	(37)	(38)
1	0.029	0.7	8.31	0.33	32.17	—	—	—	—	—	—	—	—	—	—	—	—	—	—	—	—	—	—	—	104.2	0.570	0.118	—
2																												
3	—	—	—	—	—	—	—	—	—	—	2.19	2.84	—	—	—	—	—	—	—	—	—	—	—	—	—	—	—	0.77
4	0.030	0.8	8.31	0.29	32.21	30.97	1047.3	—	—	—	—	—	4.00	1.50	2.67	3.78	4.07	25.0	1.0	0.4	—	1028.5	0.976	2186.2	104.1	0.572	0.119	0.93
5	0.030	0.8	8.31	0.34	32.16	28.50	1138.0	4.00	1.50	2.67	3.76	4.10	—	—	—	—	—	25.0	1.0	0.4	1117.6	—	0.976	2375.7	104.2	0.569	0.117	0.92
6	0.030	0.8	8.31	0.29	32.21	24.05	1348.6	—	—	—	—	—	4.00	1.50	2.67	3.78	4.07	25.0	1.0	0.4	—	1384.4	0.976	2815.3	104.1	0.572	0.119	0.93
7																												
8	0.030	0.8	8.31	0.06	32.44	25.70	1262.0	8.00	2.40	3.33	8.78	8.84	—	—	—	—	—	25.0	2.0	0.6	1518.2	—	0.976	1481.8	103.3	0.583	0.125	0.99
9	0.030	0.8	8.31	0.38	32.54	21.62	1500.2	—	—	—	—	—	8.00	2.50	3.20	8.84	8.46	25.0	2.0	0.6	—	1745.0	0.976	1703.1	103.0	0.588	0.128	1.04
10	0.030	0.8	8.31	0.06	32.44	21.27	1524.9	8.00	2.60	3.08	8.46	8.53	—	—	—	—	—	25.0	2.0	0.7	1715.4	—	0.976	1674.2	103.3	0.583	0.125	0.99
11																												
12	0.030	0.8	8.31	0.13	32.37	11.95	2714.1	16.00	5.00	3.20	17.24	17.37	—	—	—	—	—	25.0	4.1	1.3	3156.9	—	0.953	3008.5	103.6	0.579	0.123	0.99
13	0.030	0.8	8.31	-0.44	32.94	19.80	1638.1	—	—	—	—	—	16.0	4.70	3.40	17.56	18.00	25.0	4.1	1.2	—	2004.7	0.953	1910.5	101.8	0.607	0.139	0.98
14	0.030	0.8	8.31	0.13	32.37	22.72	1427.6	16.00	5.00	3.20	17.24	17.37	—	—	—	—	—	25.0	4.1	1.3	1657.0	—	0.953	1579.1	103.6	0.579	0.123	0.99
15																												
16	0.030	0.8	8.31	0.29	32.21	19.27	1683.1	—	—	—	—	—	4.00	1.50	2.67	4.08	3.79	25.0	1.0	0.4	—	1652.9	0.953	1575.2	104.1	0.572	0.119	1.08
17	0.030	0.8	8.31	0.34	32.16	21.03	1542.3	4.00	1.50	2.67	3.76	4.10	—	—	—	—	—	25.0	1.0	0.4	1514.7	—	0.976	1478.3	104.2	0.569	0.117	0.92
18	0.030	0.8	8.31	0.29	32.21	20.17	1608.0	—	—	—	—	—	4.00	1.50	2.67	4.08	3.79	25.0	1.0	0.4	—	1579.2	0.976	1541.3	104.1	0.572	0.119	1.08

Figure 4. – Back-pressure permeability — data sheet 2 — example.

10.1.2.3 Determine the length, diameter, volume, and dry mass of the specimen as described in USBR 5210. Record the values of length, volume, and dry mass on figure 4 (data sheet 2) lines (e), (f), and (g).

10.2 Calculate the initial specimen moisture content, dry unit weight, void ratio, and degree of saturation as described in USBR 5210 (if not already calculated).

10.3 Determine the specific gravity of the soil in accordance with USBR 5320. Record the value on data sheet 2 line (h) (fig. 4).

11. Preparation of Apparatus

11.1 *De-air the Pressure Chamber Assembly.*

11.1.1 Place about 4 gallons of de-aired water in a bucket.

11.1.2 Verify that the vacuum source to be used is working properly.

11.1.3 Inspect the head tanks for debris. If there is residue in the bottom of the tanks, disassemble and clean the tanks. Reassemble the tanks and recalibrate in accordance with USBR 1455. (Calibration of drain tubes is applicable to head tanks as used in this procedure.)

11.1.4 Fill the head tanks with de-aired water.

11.1.4.1 Close all valves in the system (fig. 1) prior to initially filling the head tanks. For subsequent filling of the head tanks, close valves L and G.

11.1.4.2 When initially filling the head tanks, open valves M, I, Q, O, P, and R.

11.1.4.3 Connect a flexible pneumatic hose to vacuum source.

11.1.4.4 Connect the other end of the pneumatic hose to the quick connect fitting on the top of the bottom end plate head tanks (referred to as "bottom head tanks").

11.1.4.5 Turn on the vacuum source.

11.1.4.6 Fill the bottom head tanks.

11.1.4.6.1 Place the container with de-aired water beneath the bottom head tank's drain. Place the flexible drain tubing into the de-aired water.

11.1.4.6.2 Apply vacuum to the de-aired water supply and fill the large bottom head tank by opening valve N. Fill the large head tank three-fourths full and close valves M and N.

11.1.4.6.3 Fill the small bottom head tank by opening valves K, and N. Fill the small head tank three-fourths full and close valves K and N.

11.1.4.7 Fill the top head tanks.

11.1.4.7.1 Place the container with de-aired water beneath the top end plate head tank (referred to as "top head tank") drain. Insert the flexible drain tubing into the de-aired water.

11.1.4.7.2 Apply vacuum to the de-aired water supply and fill the large top head tank by opening valve H. Fill the large head tank three-fourths full and close valves I and H.

11.1.4.7.3 Fill the small top head tank by opening valves J and H. Fill the small head tank three-fourths full and close valves J and H.

11.1.5 Assemble the pressure chamber assembly.

11.1.5.1 Remove the bronze porous inserts from the top and bottom end plates and inspect for soil intrusion. Place the insert under a faucet and run water onto the insert under intermediate water pressure. Droplets of water should collect in the area beneath the stream of water from the faucet. If the droplets do not appear, clean or replace the inserts. Place the porous inserts back into the end plates.

11.1.5.2 Remove the large O-ring from the bottom cap of pressure chamber assembly. Clean the O-ring and the O-ring groove.

11.1.5.3 Coat the O-ring with silicon lubricant and insert the O-ring into the groove in the bottom cap.

11.1.5.4 Place silicon lubricant on the bottom edge of the chamber and slide the chamber into the groove of the bottom cap.

11.1.6 Fill the head tank supply lines and pressure chamber assembly supply lines with de-aired water.

11.1.6.1 Disconnect the pnuematic hose between the vacuum source and the top of the head tanks at the vacuum source. The pneumatic hose to the top of the head tank should be open to the atmosphere.

11.1.6.2 Introduce water from the large top head tank to the top end plate and chamber by opening valves I and G.

11.1.6.3 Introduce water from the large bottom head tank to the bottom end plate and chamber by opening valves M, L, A, and B.

11.1.6.4 Fill the chamber with de-aired water from the head tanks until the top end plate is submerged in about 3 inches of water. Close valves G and L.

NOTE 3.–The head tanks will require refilling with de-aired water. Close valves G and L and refill the head tanks as described in subparagraph 11.1.4. Continue filling the chamber as described in subparagraph 11.1.6.

11.1.7 De-air the pressure chamber assembly supply system and end plates.

11.1.7.1 Isolate the head tanks by closing valves I and M.

11.1.7.2 Apply a vacuum to the head tanks by reconnecting the pneumatic hose to the vacuum source.

11.1.7.3 Draw water from the chamber through the top and bottom end plates into the large head tanks by opening valves I and G, and M and L.

NOTE 4.–Do not let the water level in the chamber fall below the top of the top end plate.

11.1.7.4 Close valves M and I. Draw water from the chamber through the top and bottom end plates into the small head tanks by opening valves K and J.

11.1.7.5 Close valves K, J, G, and L. Disconnect the pneumatic hose from the vacuum source.

11.1.7.6 Drain water from the head tanks through the top and bottom end plates by opening valves M, I, G, and L.

11.1.7.7 After water is flushed through the end plates, close valve G and L.

11.1.8 Flush water through the end plates and out the end plate drains and pressure transducer drain.

11.1.8.1 Flush water through the top end plate drain by opening valves G and F. Allow water to flow for about 15 seconds. Close valves G and F.

11.1.8.2 Flush water through the bottom end plate drain by opening valves L and E. Allow water to flow for about 15 seconds. Close valve E.

11.1.8.3 Flush water through the chamber drain by opening valve D for about 15 seconds. Close valve D.

11.1.8.4 Flush water through the pressure transducer tree by opening valves B, C, and D. Allow water to flow for about 15 seconds. Close valves D and L.

11.1.9 De-air the pore pressure transducer.

11.1.9.1 Close valves A, B, and C. Detach the pore pressure transducer from the apparatus. Using a syringe, fill the transducer with de-aired water.

11.1.9.2 Open valve L and slowly open valves A, B, and C to allow a small flow of water through the system. With water flowing, reattach and secure the transducer. Close valves B and C.

11.2 *Initialize and Check the Pressure Transducer Data Acquisition System.*

NOTE 5.–This procedure calibrates the pressure transducer data acquisition system at the Bureau's Denver Office Geotechnical Laboratory for the range of back pressures applied to the system.

11.2.1 Turn on the data acquisition system and allow to warm up for about 1 hour.

11.2.2 Set the system voltmeter to "10V" range (fig. 3).

11.2.3 Set the system scanner to "1 Second Sample Period."

11.2.4 Set the function selection knob to "Auto Range."

11.2.5 Select the system channel for monitoring pressure transducer output.

	Readout Channels	
Permeability System No.	*Axial strain (LVDT)*	*Pressure transducers*
1	14	15
2	16	17
3	18	19
4	20	21
5	22	23

Press the desired system number button on the input scanner. Press the "Step" button until the desired channel number is displayed in the readout.

NOTE 6.–"Manual" button remains depressed.

11.2.6 Verify that all pressure chamber assembly system supply valves are closed (valves A, B, C, D, E, and F).

11.2.7 Check the pressure transducer electronic readout. The pressure transducer electronic readout is adjusted to the maximum pressure which can be applied to the system.

11.2.7.1 Adjust the large or small bottom head tank to read a convenient level by adding water to or draining water from the head tank. Record the water level to the nearest 0.1 inch as the *Water level in head tank* as shown on figure 5 line (1) of "Back-Pressure Permeability Test—Data Sheet 1."

11.2.7.2 Disconnect the pneumatic hose between the vacuum source and head tank sytem (if not already done).

11.2.7.3 Open valve A to the pressure transducer tree.

11.2.7.4 Verify that valves M and L on the bottom head tank are open.

11.2.7.5 Allow the voltage output from the pressure transducer to stabilize. If the output is erratic, check for a loose connection between the pressure transducer wiring harness and plug connecting the data acquisition system. If the readings remain erratic, rewire and/or replace as necessary.

11.2.7.6 Measure the height of the water surface in the head tank, above the floor, in inches. Record the value to the nearest 0.1 inch as the *Height of water column above floor* as shown on figure 5 line (2).

11.2.7.7 Measure the height from the floor to the pressure transducer water-membrane interface in inches. Record the value to the nearest 0.1 inch as the *Height of pressure transducer above floor* as shown on figure 5 line (3).

11.2.7.8 Calculate difference in height.

$$(4) = (2) - (3) \qquad (1)$$

where:

(4) = height of water column above pressure transducer, in
(2) = height of water column above floor, in
(3) = height of pressure transducer above floor, in

Record the value to the nearest 0.1 inch as shown on figure 5 line (4).

11.2.7.9 Calculate pressure applied to the transducer by the water column.

$$\sigma_w = 0.0361\ (4) \qquad (2)$$

where:

σ_w = pressure applied to pressure transducer, lbf/in²
(4) = height of water above pressure transducer, in
0.0361 = constant pressure in lbf/in² exerted per inch of hydraulic head

Record the value to the nearest 0.01 lbf/in² as shown on figure 5 line (5).

11.2.7.10 Set the voltmeter readout (in millivolts) to the applied pressure (σ_w) calculated in subparagraph 11.2.7.9, using the balance control for the system being monitored.

NOTE 7.–The voltage readout is shown on the model HP 2401C integrating digital voltmeter as one one-thousandth of

7-2411 (3-89) Bureau of Reclamation	**BACK-PRESSURE PERMEABILITY TEST DATA SHEET 1**	Designation USBR 5610 - 8 9

SAMPLE NO.	SPECIMEN NO.	PROJECT	FEATURE
1	1	Example	Example

TESTED BY	DATE	COMPUTED BY	DATE	CHECKED BY	DATE

SYSTEM NO. 5

		Small	Large
(a) LVDT Factor	0.02 (in/V)		
(b) Top head tank area	(in^2)	0.116	3.158
(c) Bottom head tank area	(in^2)	0.124	3.135
(d) Head tank constant	(b) (c)/[(b) + (c)] (in^2)	0.060	1.573

	Date	Time [1]	Applied Lateral Pressure	Back-Pressure	Bottom Head Tank	Top Head Tank	LVDT Reading	Temp	Pore pressure Coefficient $\frac{(4_i) - (4_{i-1})}{(3_i) - (3_{i-1})}$ *	Direction of Flow
	M/D/Y	H:M:S	lbf/in^2	lbf/in^2	in	in	V	°C		
	(1)	(2)	(3)	(4)	(5)	(6)	(7)	(8)	(9)	(10)
1	7/23/89	11:38:05	0.00	0.00	3.7	4.3	7.037	—	—	—
2		11:43:26	5.07	3.09	4.6	4.3	6.795	—	—	—
3		12:13:00	10.05	8.01	4.9	4.4	6.669	—	—	—
4		12:39:00	20.01	18.03	5.2	4.5	6.603	—	—	—
5		13:12:00	30.09	28.00	5.5	4.5	6.481	—	—	—
6		13:42:00	40.07	38.08	5.6	4.5	6.379	—	—	—
7		14:17:00	50.14	48.29	5.9	10.1	6.285	—	—	—
8			55.33	50.98	—	—	—	—	0.52	—
9	7/25/89	07:00:00	54.94	53.54	6.8	10.8	6.331	—	—	—
10			60.07	57.09	—	—	—	—	0.69	—
11	7/27/89	07:09:31	60.04	58.23	7.6	11.6	6.240	—	—	—
12			65.18	63.03	—	—	—	—	0.93	—
13										
14										
15										
16										
17										
18										

[1] Record in military time

* Subscript i denotes current reading
Subscript i-1 denotes any previous reading

Figure 5. – Back-pressure permeability test — data sheet 1 — example.

Pressure Transducer Readout Calibration Data

(1) Water level in head tank	(in)	24.0
(2) Height of water column above floor	(in)	56.5
(3) Height of Pressure transducer above floor	(in)	16.4
(4) Height of water column above pressure transducer; (2) - (3)	(in)	40.1
(5) Pressure applied to pressure transducer; 0.0361 a/ (4)	(lbf/in^2)	1.44

a/ Constant to convert hydraulic head (in) to pressure (lbf/in^2)

Figure 5. - Back-pressure permeability test — data sheet 1 — example — Continued.

the true value, e.g., 0.150 millivolts equals 150.0 lbf/in², 0.003 millivolts equals 3.0 lbf/in².

11.2.7.11 Connect the pneumatic hose attached to the head tank system to port number 4 (labeled "Back-pressure") on the side of the pressure control box.

11.2.7.12 Turn the pressure control box selector to "System number 4" (back pressure). Ensure that the toggle on-off switch is on (the valve is open).

11.2.7.13 Using the pressure regulator, raise the back pressure at a rate of 40 to 50 lbf/in² per minute until the maximum system back pressure is reached.

11.2.7.14 Using the voltage control on the voltmeter, adjust the readout to read the sum of the back pressure supplied to the system and the pressure applied by the water column (e.g., 100 lbf/in² applied back pressure plus 1.45 lbf/in² of water pressure equals 0.101±0.001 mV output).

11.2.7.15 Lower the back pressure to zero; disconnect the head tank pressure supply line from port number 4 on the side of the pressure control box. (The head tanks are open to atmospheric pressure.)

11.2.7.16 Repeat subparagraphs 11.2.7.10 through 11.2.7.15 until the pressure transducer output is within ±0.5 lbf/in² of the limiting pressures.

11.2.7.17 Close valves A, L, and M.

11.3 *Initialize and Check the Axial Deformation Indicator.*

11.3.1 Select the appropriate channel for monitoring the LVDT voltage output (refer to subpar. 11.2.5).

11.3.2 Set the "Function" selection switch to "Volt."

11.3.3 Turn on the signal amplifier for the system being used.

11.3.4 Remove the LVDT core for the test system from its storage container. Make sure that the brass core extension is screwed tightly to the core.

11.3.5 Insert the LVDT core all the way into the body of the LVDT. (The body is housed in the pressure chamber assembly system.) A positive voltage reading of about 10.0 to 12.0 volts should be displayed. Slowly remove the core. The reading should decrease and become negative.

NOTE 8.–If this does not occur, a problem exists with the LVDT or voltmeter. Check the system wiring for loose connections.

11.3.6 Drain water out of the pressure chamber assembly cylinder by opening valve D.

11.3.7 Verify that the head tanks are three-fourths full with fresh de-aired water.

11.4 To aid in installing a specimen, remove one of the tie down bolts used to secure the pressure chamber assembly caps.

12. Calibration and Standardization

12.1 Verify that equipment is currently calibrated in accordance with the applicable calibration procedure. If the calibration is not current, perform the calibration before using the equipment for this procedure by the following appropriate procedure.

USBR 1000 Standards for Linear Measurement Devices
USBR 1007 Calibrating Dial Indicators
USBR 1008 Calibrating Linear Variable Differential Transformers
USBR 1009 Calibrating Compaction Molds
USBR 1012 Calibrating Balances or Scales
USBR 1040 Calibrating Pressure Gauges
USBR 1050 Calibrating Pressure Transducers
USBR 1055 Calibrating Differential Pressure Transducers
USBR 1455 Calibrating Volume and Drain Tubes

13. Conditioning

13.1 Water levels are affected by temperature change so the back pressure permeability apparatus should be in an area of stable temperature. Where significant temperature variation cannot be prevented, temperature corrections are to be used as outlined in paragraph 15.

14. Procedure

14.1 All test data are recorded on the "Back-Pressure Permeability Test—Data Sheet 1" as shown on figures 5 and 7.

14.1.1 Record the system calibrations:

- Test system No.
- LVDT factor to the nearest 0.01 in/V
- Top head tank areas to the nearest 0.001 in²
- Bottom head tank areas to the nearest 0.001 in²

14.2 Place the bronze porous inserts into the top and bottom end plates with the smooth side out.

14.3 Place a light coat of silicon lubricant around the outside circumference of the bottom end plate.

14.4 Place the test specimen between the end plates.

14.4.1 Undisturbed or compacted specimens encased with membrane, blank plastic end plates, and O-rings follow.

14.4.1.1 Remove the two O-rings that were placed on the bottom blank plastic end plate during specimen preparation.

14.4.1.2 Turn back the membrane at the bottom of the soil specimen and remove the blank plastic end plate from the specimen.

14.4.1.3 Remove any material remaining on the membrane or the side of the bottom end plate that could cause leakage.

14.4.1.4 Place a light coating of silicon lubricant around the circumference of the turned-back portion of the membrane.

14.4.1.5 Carefully place the specimen on the bottom end plate attached to the bottom cylinder cap.

14.4.1.6 Fold the membrane down over the bottom end plate.

14.4.1.7 Using the O-ring expander, place two O-rings over the membrane to hold it firmly to the bottom end plate. Be careful to avoid disturbing the specimen.

14.4.1.8 Place the remaining two O-rings on the O-ring expander; slip the expander over the specimen in such a position that, when the top end plate is in place, the O-ring can be rolled onto the top end plate.

14.4.1.9 Remove the two O-rings from the top of the specimen. Turn down the top of the membrane and remove the blank plastic end plate from the specimen.

14.4.1.10 Remove any material on the rubber membrane and on the circumference of the top end plate. Apply a light coat of silicon lubricant on the circumference of the top end plate and on the turned back portion of the membrane.

14.4.1.11 Carefully position the top end plate on top of the specimen and fold the rubber membrane up over the top end plate.

14.4.1.12 Slide the O-ring expander up to the edge of the top end plate; roll the O-rings onto the membrane to seal the specimen. Remove the O-ring expander.

14.4.2 Refer to USBR 5210 for compacted specimens prepared on the bottom end plate using the stand-up vacuum mold system.

14.5 Replace the tie-down bolt that was removed in subparagraph 11.4.

14.6 Place the pressure chamber cylinder on the base cap.

14.6.1 Apply a thin coating of silicon lubricant on the large O-ring and insert it into the groove in the bottom cap of the pressure chamber assembly.

14.6.2 Invert the pressure chamber cylinder and apply a thin coating of silicon lubricant on the bottom edge.

14.6.3 Using a syringe, fill the LVDT chamber in the pressure chamber cylinder with de-aired water (fig. 6).

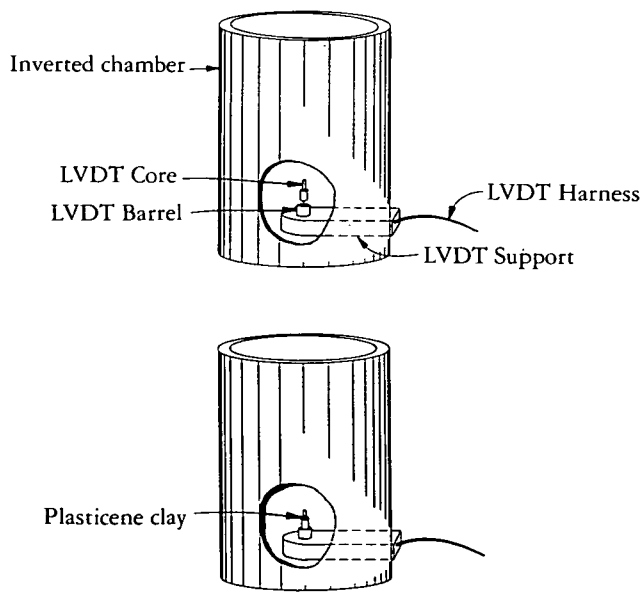

Figure 6. - LVDT placement in back pressure chamber cylinder.

14.6.4 Insert the large diameter end of the LVDT core all the way into the LVDT chamber.

14.6.5 Check the LVDT voltage output on the voltmeter and verify that the reading is approximately equal to that previously determined in subparagraph 11.3.5. If the reading is not within ±1.0 volt of the previous reading, the LVDT wiring and connections to the amplifier and voltmeter should be checked and repaired as necessary.

14.6.6 Ensure that the LVDT chamber is full of de-aired water. Seal the LVDT core to the chamber using a ball of plasticiene clay (fig. 6).

14.6.7 Invert the pressure chamber cylinder and place the bottom edge into the groove in the bottom cap of the pressure chamber assembly.

14.6.8 Rotate the pressure chamber cylinder slightly to help ensure a proper seal between the cylinder and the bottom cap.

14.7 Fill the pressure chamber cylinder with de-aired water.

14.7.1 Obtain a bucket of de-aired water and a siphon hose.

14.7.2 Elevate the bucket above the cylinder level; put one end of the siphon in the bucket and start the waterflow.

14.7.3 With water flowing in the siphon, attach the other end of the hose to the chamber (center) drain tube at the bottom of the bottom cap. Leave the hose attached to the drain tube.

14.7.4 Open valve D so that water flows into the cylinder. When the cylinder fills above the LVDT and plasticene clay seal, close valve D.

14.7.5 Remove the plasticene clay and release the LVDT core by slowly pushing the clay down from the LVDT casing. The tip of the LVDT core is left resting on the top of the top end plate.

14.8 Set the LVDT voltage readout range on the voltmeter.

14.8.1 Using a small screwdriver, adjust the "zero" on the amplifer until the maximum positive voltmeter reading is achieved.

14.9 Open valve D and continue to fill the pressure chamber cylinder. Continue filling the cylinder with water until the meniscus holds the water slightly above the top of the cylinder. Close valve D.

14.10 Place and seal the pressure chamber top cap on the pressure chamber cylinder.

14.10.1 Insert a quick connect insert sleeve into the quick connection on the top plate to ensure the chamber is open to atmospheric pressure.

14.10.2 Clean and lubricate the O-ring for the top cap of the pressure chamber and place the O-ring in the groove in the top cap. Apply a thin coating of silicon lubricant on the top edge of the cylinder.

14.10.3 Align the four holes in the top cap with the four tie down bolts. Slip the top cap over the bolts and insert the top edge of the cylinder into the groove in the top cap.

NOTE 9.-If the top cap has not sealed properly, remove the cap and repeat subparagraphs 14.9 and 14.10.

14.10.4 Put the four nuts on the tie-down bolts and hand tighten; then, torque each nut to 25 ft-lbf by sequentially tightening nuts in a crisscross pattern.

14.10.5 Follow the same nut-tightening pattern and torque each bolt to 50 ft-lbf.

14.11 Check the zero pressure reading and the maximum back pressure reading on the system as described in subparagraph 11.2.7.

14.12 Take a set of readings at zero lateral and zero back pressure. Record the date, time (use military time), top and bottom head tank levels (±0.02 in.), LVDT reading (±0.001 volts), and applied lateral and back pressure (±0.1 lbf/in²) as shown on figure 5.

14.13 Saturate the specimen as follows.

14.13.1 Turn the pressure control box selection to system number 2, "Lateral" and verify that the lateral pressure equals zero. Ensure that the toggle on-off switch is on (the valve is open).

14.13.2 Attach the lateral pressure supply line to the quick connection on the top cap of the chamber cylinder.

14.13.3 Attach the lateral pressure supply line to the lateral pressure port on the side of the pressure control box.

14.13.4 Using the pressure regulator, apply 5 lbf/in² lateral pressure inside the chamber and monitor the pressure using the pressure transducer (close valves A and B, open valve C).

NOTE 10.–It is important to open and close valves in the sequence prescribed in this procedure. Reversing or changing the sequence could adversely affect test results.

14.13.5 Turn the pressure control box selector to "Back pressure."

14.13.6 Monitor the back pressure using the pressure transducer (close valve C, open valves A and B); apply 3 lbf/in² back pressure to the back pressure supply system using the pressure regulator.

NOTE 11.–The difference between the applied lateral pressure and back pressure should be 2 to 5 lbf/in² for most soils. This differential should be increased if soils with swell pressures greater than 2 lbf/in² are tested to prevent the specimen from swelling. Never let the back pressure exceed the lateral pressure.

14.13.7 Allow specimen pore pressure to stabilize.

NOTE 12.–Time required for the pore fluid to reach an equilibrium condition under the applied back pressure can vary greatly depending on soil type, initial degree of saturation, and size of specimen. Normally, the back pressure can be raised to 60 lbf/in² over a period of 30 minutes.

14.13.8 Take a set of readings as described in subparagraph 14.12.

14.13.9 Increase the lateral pressure to 10 lbf/in² as described in subparagraphs 14.13.1 and 14.13.4.

14.13.10 Increase the back pressure to 8 lbf/in² by switching the pressure control box selector to the back pressure, and applying back pressure using the pressure regulator as described in subparagraph 14.13.6. Allow the specimen to stabilize and take a set of readings (subpar. 14.12).

14.13.11 Raise the lateral pressure to 20 lbf/in² and the back pressure to 18 lbf/in² using the procedures described in subparagraphs 14.13.1, and 14.13.4 through 14.13.6. Take another set of readings.

14.13.12 Repeat this procedure of raising the lateral and back pressures in increments of 10 lbf/in²—keeping a 2 lbf/in² pressure differential—until the system is at a 60 lbf/in² lateral pressure and a 58 lbf/in² back pressure.

14.13.13 Determine Skempton's pore pressure coefficient *B*. Skempton's coefficient *B* is determined by comparing the change in pore pressure to a change in confining (lateral) pressure and is used as an indicator of specimen saturation. As *B* approaches 1.0, the degree of saturation approaches 100 percent. The following steps outline the general procedure to determine *B*. The exact method depends on the particular setup and apparatus used.

14.13.13.1 Isolate the test specimen from the back pressure supplied to the head tanks by closing valves A, B, L, and G.

14.13.13.2 Open valve B and read the pore pressure at the bottom end plate using the voltmeter. Record the value as the *Back pressure* as shown on data sheet 1 col. (4) (fig. 5).

NOTE 13.–Be sure to set the voltmeter to the proper channel to obtain the reading.

14.13.13.3 Close valve B to isolate the specimen.

14.13.13.4 Open valve C and read the applied lateral pressure using the voltmeter. Record the value as the *Applied lateral pressure* as shown on data sheet 1 col. (3) (fig. 5).

14.13.13.5 Increase the lateral pressure by approximately 10 lbf/in² using the regulator on the pressure control box and monitoring the increase on the voltmeter.

14.13.13.6 Read the applied lateral pressure on the voltmeter, and record the value as shown. Close valve C.

14.13.13.7 Release and vent the pressure retained in the transducer tree by opening and closing valve A.

14.13.13.8 Open valve B and read the pore pressure in the specimen using the voltmeter. Record the value in the *Back pressure* column as shown on the form.

14.13.13.9 Calculate pore pressure coefficient.

$$B = \frac{\Delta u}{\Delta \sigma_3} = \frac{BP_2 - BP_1}{LP_2 - LP_1} \qquad (3)$$

where:

B = Skempton's pore pressure coefficient, dimensionless
Δu = change in pore pressure, lbf/in²
$\Delta \sigma_3$ = change in lateral pressure, lbf/in²
BP_1 = initial pore pressure, lbf/in²
LP_1 = initial lateral pressure, lbf/in²
BP_2 = final pore pressure, lbf/in²
LP_2 = final lateral pressure, lbf/in²

Record the value as shown on figure 5 data sheet 1.

14.13.13.10 If the value of B obtained in subparagraph 14.13.12.9 is equal to or greater than 0.92, the specimen is sufficiently saturated for testing. Proceed to subparagraph 14.14.

14.13.13.11 If the value of B is less than 0.92, increase the back pressure and maintain a 2 lbf/in² differential between the lateral pressure and back pressure using the procedures described in subparagraphs 14.13.5 and 14.13.6.

14.13.13.12 Open valves A, L, and G and allow the specimen to stabilize.

14.13.13.13 Determine another pore pressure coefficient value as described in subparagraphs 14.13.13.1 through 14.13.13.10 until the B value equals or exceeds 0.92.

14.14 Apply the desired effective confining pressure for testing the specimen. The effective confining pressure σ_3' is equal to the difference between the applied lateral pressure and the applied back pressure.

14.14.1 Open valves K and J, and take a complete set of readings. On a new data sheet record the date, time (use military time), top and bottom small head tank levels (±0.02 in), LVDT reading (±0.001 V), applied lateral pressure and back pressure (0.1 lbf/in²), and temperature (±1.0 °C) as shown on figure 7.

NOTE 14.–Consolidation of the saturated specimen is monitored by collecting pore fluid expelled from the specimen. The volume of fluid is measured using the small head tanks to maximize the accuracy of the measurement.

14.14.2 Open valves A and G (if not already open).

14.14.3 Increase the lateral pressure until the difference between the lateral pressure and back pressure equals the desired effective confining pressure.

14.14.4 Allow the specimen to stablize until the small head tank readings and LVDT reading remain essentially constant.

14.14.5 Take a complete set of readings and record the time, applied lateral pressure, back pressure, bottom head tank level, top head tank level, LVDT reading, and temperature (subpar. 14.14.1).

14.14.6 Calculate the following as described in subparagraph 14.16.3.

Axial deformation	Average axial strain
Specimen area	Specimen volume change
Specimen volume	Dry unit weight
Void ratio	Void ratio function

Record the values as shown on figure 4.

14.14.7 Calculate consolidated specimen pore volume; i.e., volume of voids.

$$V_v = eV_s \quad (4)$$

where:

V_v = volume of voids in specimen, in³
e = consolidated specimen void ratio, dimensionless
V_s = specimen solid volume, in³

Record the value to the nearest 0.001 on figure 4 data sheet 2 line (J).

14.15 Set the hydraulic gradient.

14.15.1 Select the hydraulic gradient(s) for the tests.

14.15.1.1 The hydraulic gradient should reflect field conditions of the situation under study. Generally, hydraulic gradients from 1 to 2 cover most field conditions. However, using hydraulic gradients of this magnitude may require long periods of time to obtain a sufficient volume of permeant fluid to determine the coefficient of permeability. It is possible to reduce the length of time required to obtain a test result by either reducing the length (height) of the test specimen, increasing the hydraulic gradient, or decreasing the volume of permeant fluid required to calculate the coefficient of permeability.

Increasing the hydraulic gradient is appropriate only for relatively stiff materials such as compacted embankment or overconsolidated materials. Softer soils may undergo seepage consolidation when exposed to high hydraulic gradients and can result in an error in the coefficient of permeability of up to two orders of magnitude.

The following table is presented as a guideline for selecting hydraulic gradients for stiff soils.

Coefficient of permeability, ft/yr	*Suggested hydraulic gradient*
> 1000	1
100 to 1000	5
10 to 100	10
1 to 10	20
0.1 to 1	50

14.15.2 Select the head tank for the test.

14.15.2.1 Use the following guidelines for selecting the size of head tanks for the permeability portion of the test.

Coefficient of permeability, ft/yr	*Size of head tank*
> 10	large
≤ 10	small

These guidelines reflect the volume of permeant fluid that can accurately be measured to permit computation of a coefficient of permeability valid to ±10 percent.

14.15.2.2 Close valves L and G to isolate the head tanks from the specimen. If the large head tanks are to be used, open valves I and M and close valves K and J. If the small head tanks are to be used, open valves K and J and close valves M and I.

14.15.3 Flow from top head tank to bottom head tank follows.

14.15.3.1 Set the water level in the top head tank at a convenient level by either adding water to or draining water from the top head tank.

14.15.3.1.1 Add water to the top head tank as follows.

14.15.3.1.1.1 Release the back pressure from the head tank supply system as follows; lock in the applied back pressure by closing the toggle on-off switch marked "Back-Pressure," and disconnect the pneumatic hose at the quick connect fitting at the pressure control box.

7-2411 (3-89) Bureau of Reclamation	BACK-PRESSURE PERMEABILITY TEST DATA SHEET 1		Designation USBR 5610 - 8 9
SAMPLE NO. 1	SPECIMEN NO. 1	PROJECT Example	FEATURE Example
TESTED BY DATE	COMPUTED BY DATE	CHECKED BY DATE	

SYSTEM NO. 5

		Small	Large
(a) LVDT Factor	0.02 (in/V)		
(b) Top head tank area	(in^2)	0.116	3.158
(c) Bottom head tank area	(in^2)	0.124	3.135
(d) Head tank constant	(b) (c)/[(b) + (c)] (in^2)	0.060	1.573

	Date	Time [1]	Applied Lateral Pressure	Back-Pressure	Bottom Head Tank	Top Head Tank	LVDT Reading	Temp	Pore pressure Coefficient $\frac{(4_i) - (4_{i-1})}{(3_i) - (3_{i-1})}$*	Direction of Flow
	M/D/Y	H:M:S	lbf/in^2	lbf/in^2	in	in	V	°C		
	(1)	(2)	(3)	(4)	(5)	(6)	(7)	(8)	(9)	(10)
1	7/29/89	7:09:10	85.00	60.00	L 8.3	L 10.8	5.611	21		
2										
3	8/1/89	8:23:18	85.00	60.00	10.0	14.0	5.538	21		T → B
4	8/2/89	8:00:02	85.00	60.00	10.7	13.1	5.528	21		
5	8/2/89	8:05:07	85.00	60.00	14.0	10.0	5.528	21		B → T
6	8/2/89	8:36:05	85.00	60.00	12.7	11.2	5.530	21		
7	8/2/89	8:39:52	85.00	60.00	10.0	14.0	5.529	21		T → B
8	8/2/89	9:08:22	85.00	60.00	11.2	12.7	5.531	21		
9	8/2/89	9:11:22	85.00	60.00	14.0	10.0	5.528	21		B → T
10	8/2/89	9:35:25	85.00	60.00	12.7	11.2	5.529	21		
11	8/2/89	9:49:20	85.00	60.00	10.0	18.0	5.529	21		T → B
12	8/2/89	10:15:02	85.00	60.00	12.8	15.2	5.526	21		
13	8/2/89	10:20:14	85.00	60.00	18.0	10.0	5.525	21		B → T
14	8/2/89	10:41:51	85.00	60.00	15.3	12.8	5.526	21		
15	8/2/89	10:46:52	85.00	60.00	10.0	18.0	5.527	21		T → B
16	8/2/89	11:08:08	85.00	60.00	12.7	15.3	5.526	21		
17	8/2/89	11:56:05	85.00	60.00	10.0	26.0	5.527	21		B → T
18	8/2/89	12:18:08	85.00	60.00	15.5	20.5	5.527	22		

[1] Record in military time

* Subscript i denotes current reading
Subscript i-1 denotes any previous reading

Figure 7. - Back-pressure permeability test — data sheet 1 — example — Continued.

14.15.3.1.1.2 Connect the pneumatic hose to the vacuum source (make sure the vacuum is turned on).

14.15.3.1.1.3 Place a container of de-aired water beneath the drain for the top head tank and place the flexible tubing into the de-aired water.

14.15.3.1.1.4 Open valve H and fill the top head tank to the desired level.

14.15.3.1.1.5 Close valve H. Disconnect the pneumatic hose from the vacuum source and reconnect the pneumatic hose to the back pressure port on the pressure control box. Slowly open the toggle switch to reestablish pressure in the head tank system.

14.15.3.1.1.6 Check the level of water in the top head tank.

NOTE 15.–If the small head tanks are used, use the procedure outlined above except close valve I and open valve J.

14.15.3.1.2 Drain water from the top head tanks as follows.

14.15.3.1.2.1 Place a container beneath the drain associated with the top head tank.

14.15.3.1.2.2 Slowly open valve H and lower the water level in the top head tank to the desired level.

NOTE 16.–If the small head tanks are used, follow the above procedure but close valve I and open valve J.

14.15.3.2 Set the water level in the bottom head tank.

14.15.3.2.1 Calculate height of the tailwater in the bottom head tank.

$$H_b = H_t + i\ (L_o - \Delta L_i) \qquad (5)$$

where:

H_b = bottom head tank reading, in
H_t = top head tank reading, in
i = hydraulic gradient selected for test, dimensionless
L_o = initial specimen length, in
ΔL_i = current specimen axial deformation, in

NOTE 17.– For the current configuration of test equipment, the measurement system shows increasing measurement units (inches) with a decrease in height of water column, e.g. a measured value of 0 inch corresponds with a 76-inch height above datum (floor) while a measured value of 40 inches corresponds with 36-inches height above datum (floor).

NOTE 18.– If hydraulic heads greater than about 40 inches (hydraulic gradients greater than about 10) are required, differential pressure may be applied through the pneumatic pressure supply system. The required pneumatic pressure may be determined as follows:

Calculate head to be supplied by pneumatic pressure.

$$H_{hp} = \Delta H - 40 \qquad (6)$$

where:

H_{hp} = hydraulic head supplied by pneumatic pressure, in
ΔH = total differential head to be applied, in
40 = maximum hydraulic head available, in

Convert the head to be supplied by pneumatic pressure from hydraulic head (inches) to pneumatic pressure (lbf/in^2).

$$Hp = 0.0361\ H_{hp} \qquad (7)$$

where:

Hp = pneumatic head to be applied, lbf/in^2
H_{hp} = hydraulic head supplied by pneumatic pressure, in
0.0361 = constant, converts 1 inch of head to equivalent pneumatic pressure, (0.0361 lbf/in^2 = 1 inch hydraulic head)

14.15.3.3 Set the water level in the bottom head tank to the value calculated in subparagraph 14.15.3.2.1 using the procedure in subparagraph 14.15.4.1 (below).

14.15.4 Flow from bottom head tank to top head tank follows.

14.15.4.1 Set the water level in the bottom head tank at a convenient level by either adding water to or draining water from the bottom head tank.

14.15.4.1.1 Add water to the bottom head tank as described in subparagraph 14.15.3.1.1. Instead of valve H, use valve N for filling the large head tanks. Use valve M instead of I and valve K instead of J.

14.15.4.1.2 Drain water from the bottom head tank as described in subparagraph 14.15.3.1.2. Use valve N instead of valve H.

14.15.4.2 Set the water level in the top head tank.

14.15.4.2.1 Calculate height of tailwater in the top head tank.

$$H_t = H_b + i\ (L_o - \Delta L_i) \qquad (8)$$

where:

H_t = top head tank reading, in
H_b = bottom head tank reading, in
i = hydraulic gradient selected for test, dimensionless
L_o = initial specimen length, in
ΔL_i = current specimen axial deformation, in

14.15.4.2.2 Set water level in the top head tank to the value calculated in subparagraph 14.15.3.2.1 using the procedure in subparagraph 14.15.3.1.2.

14.15.5 Take a complete set of readings except for time as shown on the form (fig. 7). Denote which head tank is used (small or large) by writing either an "S" or "L" in front of the first head tank reading.

14.15.6 Denote direction of flow through the specimen as "T → B" or "B → T" for "top to bottom" or "bottom to top," respectively, as shown on figure 7 column (10).

14.16 Start the permeability test.

14.16.1 Begin each segment of the permeability test by simultaneously opening valves L and G. Record the start time with the line of data previously recorded in subparagraph 14.15.4.

14.16.2 Terminate each segment of the test and obtain a complete set of data readings when one of the following criteria have been met:

14.16.2.1 Minimum time intervals required to determine coefficient of permeability are:

Estimated coefficient of permeability, ft/yr	*Time internal,* minutes*
> 1000	1
100 to 1000	5
10 to 100	10
1 to 10	30
0.1 to 1	300
< 0.1	3000

*Minimum time required to determine coefficient of permeability to within ±10 percent for a 3.25-inch diameter by 4.0-inch high specimen under a hydraulic gradient of 1 (one). If this criteria is met, close valves L and G.

NOTE 19.–The time required to determine the coefficient of permeability to within ±10 percent can be reduced by increasing the hydraulic gradient. The reduced test time is equivalent to the original test time multiplied by the reciprocal of the increased hydraulic gradient.

14.16.2.2 Reduction in Hydraulic Head.–The final hydraulic head on the test specimen shall not be less than 75 percent of the initial hydraulic head.

14.16.2.2.1 The final hydraulic head on the test specimen shall not be less than 75 percent of the initial hydraulic head ($H_f = 0.75\ H_i$). If this criteria is met, close valves L and G.

14.16.3 Calculate the following quantities from data recorded at the beginning and end of each segment of the test.

14.16.3.1 Calculate and record the inflow volume to the nearest 0.001 in^3 if the small head tanks are used and to the nearest 0.01 in^3 if the large head tanks are used.

14.16.3.2 Calculate and record the outflow volume to the nearest 0.001 in^3 if the small head tanks are used and to the nearest 0.01 in^3 if the large head tanks are used.

14.16.3.3 Calculate and record the inflow/outflow ratio to the nearest 0.01.

14.16.4 Continue the permeability test until inflow/outflow ratio from three successive segments satisfies the following criteria.

$$0.90 < Q_r < 1.10 \qquad (9)$$

where Q_r equals inflow/outflow ratio, dimensionless.

NOTE 20.– If the criteria in subparagraph 14.16.2.2 is met, reset the hydraulic head as described in subparagraphs 14.15.3 or 14.15.4, and continue testing as described in subparagraphs 14.15.5 through 14.16.4. If the criteria in subparagraph 14.16.2.2 is not met, the test may be continued as described in subparagraphs 14.15.5 through 14.16.4.

14.16.5 Calculate the following quantity from the data recorded at the end of the each segment which satisfied the criteria of subparagraph 14.16.4.

14.16.5.1 Calculate and record the axial deformation to the nearest 0.001 inch.

14.16.6 Calculate the following quantities from the data recorded at the end of each segment.

14.16.6.1 Calculate and record the axial deformation to the nearest 0.001 inch.

14.16.6.2 Calculate and record the axial strain to the nearest 0.1 percent.

14.16.6.3 Calculate and record the specimen area to the nearest 0.01 in^2.

14.16.6.4 Calculate and record the specimen volume change to the nearest 0.01 in^3.

14.16.6.5 Calculate and record the specimen volume to the nearest 0.01 in^3.

14.16.7 Calculate the following parameters from the data recorded on data sheet 1 (fig. 7) and on data sheet 2 (fig. 4).

14.16.7.1 Calculate and record the test segment duration to the nearest 0.01 min.

14.16.7.2 Calculate and record the geometric time factor to the nearest 0.1 ft/yr.

14.16.7.3 Calculate and record the initial hydraulic head to the nearest 0.02 in.

14.16.7.4 Calculate and record the final hydraulic head to the nearest 0.02 in.

14.16.7.5 Calculate and record the hydraulic head ratio to the nearest 0.01.

14.16.7.6 Calculate and record the effective confining pressure to the nearest 0.1 lbf/in^2.

14.16.7.7 Calculate and record the initial and final hydraulic gradients to the nearest 0.1.

14.16.7.8 Calculate and record the coefficient of permeability at the test temperature to the nearest 0.1 ft/yr.

14.16.7.9 Determine and record the temperature correction coefficient to the nearest 0.01 (table 1).

14.16.7.10 Calculate and record the coefficient of permeability corrected to 20 °C to the nearest 0.1 ft/yr.

14.16.7.11 Calculate and record the dry unit weight to the nearest 0.1 lbf/ft^3.

14.16.7.12 Calculate and record the void ratio to the nearest 0.001.

Table 1.–Viscosity of water correction factor versus temperature. From *Smithsonian Physical Tables*, 8th ed., table 17: R_t equals viscosity of water at test temperature divided by the viscosity of water at 20 °C.

Temperature t, °C	Correction factor, R_t	Temperature t, °C	Correction factor, R_t
10.0	1.301	25.0	.899
11.0	1.265	26.0	.869
12.0	1.230	27.0	.850
13.0	1.197	28.0	.832
14.0	1.165	29.0	.814
15.0	1.135	30.0	.797
16.0	1.106	31.0	.780
17.0	1.077	32.0	.764
18.0	1.051	33.0	.749
19.0	1.025	34.0	.733
20.0	1.000	35.0	.719
21.0	0.976	36.0	.705
22.0	.953	37.0	.691
23.0	.931	38.0	.678
24.0	.910	39.0	.665

14.16.7.13 Calculate and record the void ratio function to the nearest 0.001.

14.17 Repeat subparagraphs 14.15 and 14.16 for each hydraulic gradient under which the specimen was tested.

14.18 Repeat subparagraph 14.14 through 14.17 for each confining pressure under which the specimen was tested.

15. Calculations

15.1 Perform all calculations on "Back Pressure Permeability" forms; figure 4 data sheet 2, figure 5 data sheet 1, and figure 7 data sheet 1 as specified and record in the appropriate column or line.

15.2 All calculations are performed using data recorded on data sheet(s) 1 and 2.

15.3 *Axial Deformation* [col. (11)].–Calculate axial deformation of specimen at any point during the test.

$$\Delta L = a\,(z_o - z_i) \tag{10}$$

where:

ΔL = axial deformation of specimen, in
z_o = initial LVDT voltage reading, V
z_i = current LVDT voltage reading, V
a = LVDT factor, in/V

15.4 *Average Axial Strain* [col. (12)].–Calculate average axial specimen strain.

$$\epsilon_a = \frac{\Delta L_i}{L_o}\,(100) \tag{11}$$

where:

ϵ_a = average axial strain, %
ΔL_i = current axial deformation of specimen, in
L_o = initial specimen length, in
100 = converts from decimal to percent

15.5 *Specimen Area* [col. (13)].–Calculate current specimen area.

$$A_i = \frac{V_o}{L_o - \Delta L_i} \tag{12}$$

where:

A_i = current specimen area, in^2
V_o = initial specimen volume, in^3

15.6 *Specimen Volume Change* [col. (14)].–Calculate specimen volume change due to consolidation.

$$\Delta V = A_b\,(B_1 - B_2) + A_t\,(T_1 - T_2) \tag{13}$$

where:

ΔV = specimen volume change, in^3
B_1 = bottom head tank reading before consolidation, in
B_2 = bottom head tank reading after consolidation, in
A_b = area of bottom head tank, in^2
T_1 = top head tank reading before consolidation, in
T_2 = top head tank reading after consolidation, in
A_t = area of top head tank, in^2

15.7 *Specimen Volume* [col. (15)].–Calculate specimen volume after consolidation.

$$V_c = V_o - \Delta V \tag{14}$$

where:

V_c = consolidated specimen volume, in^3
V_o = initial specimen volume, in^3
ΔV = specimen volume change, in^3

NOTE 21. – If the specimen is consolidated under more than one lateral pressure, volume change from consolidation, ΔV, should be subtracted from the previous consolidated volume, V_c, to obtain the current consolidated volume.

15.8 *Segment Duration* [col.(16)].–Calculate duration of flow through the specimen for each test segment.

$$\Delta t = t_s - t_f \tag{15}$$

where:

Δt = flow duration, min
t_s = time at beginning of trial, day:hour:minute:second
t_f = time at end of trial, d:hr:min:s

Convert from (d:hr:min:s) to minutes and record the value to the nearest 0.01 min as shown on the form.

15.9 Calculate the following test system coefficients. (Refer to figures 4, 5, and 7.)

15.9.1 *Head Tank Constant* [data sheet 1 line (d)].–For the general solution to the flow equation, the constant—based on areas of the head tanks—for head tanks having unequal areas is calculated.

$$A_c = \frac{A_t\,A_b}{A_t + A_b} \tag{16}$$

where:

A_c = head tank constant, in^2
A_t = area of top head tank, in^2
A_b = area of bottom head tank, in^2

Record the value to the nearest 0.001 in^2.

15.9.2 *Volume of Solids* [data sheet 2 line (i)].–Calculate volume of solids in the specimen.

$$V_s = \frac{27.68\,m_d}{G} \tag{17}$$

where:

V_s = volume of solids in specimen, in^3
m_d = dry mass of specimen from line (g), lbm
G = specific gravity of solids in specimen from line h
27.68 = converts pound mass to volume, in^3

15.9.3 *Volume of Voids* [data sheet 2 line (j)].–Calculate volume of voids in the specimen.

$$V_v = eV_s \tag{18}$$

where:

V_v = volume of voids in specimens, in^3
e = consolidated specimen void ratio, dimensionless
V_s = volume of solids in specimen, in^3

15.10 *Geometric-Time Factor* [col. (17)].–Calculate geometric time parameter for a test segment.

$$GT = 4.380 \times 10^4 \frac{(L_o - \Delta L_i)\, A_c}{A\, \Delta t} \quad (19)$$

where:
GT = geometric time factor, ft/yr
A_c = head tank constant, in²
A = specimen area, in²
Δt = flow duration, min
L_o = initial specimen length, in
ΔL_i = current specimen axial deformation, in
4.380×10^4 = converts from in/min to ft/yr

15.11 Determine hydraulic heads and inflow/outflow volumes noted in columns (18) through (27).

15.11.1 *Direction of Flow.*–Bottom head tank to top head tank (see subpar. 14.15.16).

15.11.1.1 Calculate *initial hydraulic head* [col. (18)].

$$H_o = T_o - B_o \quad (20)$$

where:
H_o = initial hydraulic head, in
T_o = initial top head tank reading, in
B_o = initial bottom head tank reading, in

NOTE 22.–The calculations represent an increasing measurement value for decreasing hydraulic head.

15.11.1.2 Calculate *final hydraulic head* [col. (19)].

$$H_f = T_f - B_f \quad (21)$$

where:
H_f = final hydraulic head, in
T_f = final top head tank reading, in
B_f = final bottom head tank reading, in

15.11.1.3 Calculate *hydraulic head ratio* [col. (20)].

$$Hr_{bt} = \frac{H_o}{H_f} \quad (22)$$

where Hr_{bt} equals hydraulic head ratio (bottom to top), dimensionless.

15.11.1.4 Calculate *inflow volume* [col. (21)].

$$QI_{bt} = A_b\, (B_f - B_o) \quad (23)$$

where:
A_b = area of bottom head tank, in²
QI_{bt} = inflow volume (bottom to top), in³
B_o = initial top head tank reading, in
B_f = final top head tank reading, in

15.11.1.5 Calculate *outflow volume* [col. (22)].

$$QO_{bt} = A_t\, (T_o - T_f) \quad (24)$$

where:
A_t = area of top head tank, in²
QO_{bt} = outflow volume (bottom to top, in³
T_o = initial bottom head tank reading, in
T_f = final bottom head tank reading, in

15.11.2 *Direction of Flow.*–Top head tank to bottom head tank (see subpar. 14.15.6).

15.11.2.1 Calculate *initial hydraulic head* [col. (23)].

$$H_o = B_o - T_o \quad (25)$$

where:
H_o = initial hydraulic head, in
B_o = initial bottom head tank reading, in
T_o = initial top head tank reading, in

15.11.2.2 Calculate *final hydraulic head* [col. (24)].

$$H_f = B_f - T_f \quad (26)$$

where:
H_f = final hydraulic head, in
T_f = final top head tank reading, in
B_f = final bottom head tank reading, in

15.11.2.3 Calculate *hydraulic head ratio* [col. (25)].

$$Hr_{tb} = \frac{H_o}{H_f} \quad (27)$$

where Hr_{tb} equals hydraulic head ratio (top to bottom), dimensionless.

15.11.2.4 Calculate *inflow volume* [col. (26)].

$$QI_{tb} = A_t\, (T_f - T_o) \quad (28)$$

where:
A_t = area of top head tank, in²
QI_{tb} = inflow volume (top to bottom), in³
T_o = initial top head tank reading, in
T_f = final top head tank reading, in

15.11.2.5 Calculate *outflow volume* [col. (27)].

$$QO_{tb} = A_b\, (B_o - B_f) \quad (29)$$

where:
A_b = area of bottom head tank, in²
QO_{tb} = outflow volume (top to bottom), in³
B_o = initial bottom head tank reading, in
B_f = final bottom head tank reading, in

15.12 *Effective Lateral Pressure* [col. (28)].–Calculate effective lateral pressure.

$$\sigma_3' = \sigma_3 - u_b \quad (30)$$

where:
σ_3' = effective lateral pressure, lbf/in²
σ_3 = applied lateral pressure, lbf/in²
u_b = back pressure, lbf/in²

15.13 Determine the hydraulic gradients.

15.13.1 *Initial Hydraulic Gradient* [col. (29)].–Calculate initial hydraulic gradient.

$$i_o = \frac{H_o}{L_o - \Delta L_i} \quad (31)$$

where:
i_o = initial hydraulic gradient, dimensionless
H_o = initial hydraulic head, (in)
L_o = initial specimen length, in
ΔL_i = current specimen axial deformation, in

15.13.2 *Final Hydraulic Gradient* [col. (30)].–Calculate final hydraulic gradient.

$$i_f = \frac{H_f}{L_o - \Delta L_i} \quad (32)$$

where:
i_f = final hydraulic gradient, dimensionless
H_f = final hydraulic head, in

15.14 *Coefficient of Permeability, k_t*.–Calculate coefficient of permeability at the test temperature.

15.14.1 *Direction of Flow.*–Bottom head tank to top head tank [col. (31)].

$$k_t = GT \ln Hr_{bt} \quad (33)$$

where:
k_t = coefficient of permeability, ft/yr
GT = geometric time factor, ft/yr
Hr_{bt} = hydraulic head ratio (bottom to top), dimensionless

15.14.2 *Direction of Flow.*–Top head tank to bottom head tank [col. (32)].

$$k_t = GT \ln Hr_{tb} \quad (34)$$

where:
k_t = coefficient of permeability, ft/yr
GT = geometric time factor, ft/yr
Hr_{tb} = hydraulic head ratio (top to bottom), dimensionless

15.15 Determine and record the temperature correction factor, R_t. Enter table 1 with the average temperature at which the test was run and find the corresponding temperature correction factor. Record the value in column (33) to the nearest 0.001.

15.16 Calculate coefficient of permeability corrected to 20 °C [col. (34)].

$$k_{20} = k_t R_t \quad (35)$$

where:
k_{20} = coefficient of permeability corrected to 20 °C, ft/yr
k_t = coefficient of permeability at test temperature, ft/yr
R_t = temperature correction factor (see table 1), dimensionless

15.17 *Dry Unit Weight* [col. (35)].–Calculate dry unit weight of the specimen.

15.17.1 Calculate the dry density of the test specimen.

$$\rho_d = \frac{1{,}728\ m_d}{V_c} \quad (36)$$

where:
ρ_d = dry density of test specimen, lbm/ft³
m_d = dry mass of specimen, lbm
V_c = consolidated volume of test specimen, in³
1,728 = changes in³ to ft³

15.17.2 Convert the dry density to dry unit weight (assume 1 lbf = 1 lbm). Record the value to the nearest 0.1 lbf/ft³.

15.18 *Void Ratio* [col. (36)].–Calculate specimen void ratio.

$$e = \frac{V_c}{V_s} - 1 \quad (37)$$

where:
e = void ratio, dimensionless
V_c = consolidated volume of test specimen, in³
V_s = volume of solids in test specimen, in³
1 = unity

15.19 *Void Ratio Function* [col. (37)].–Calculate void ratio function.

$$e_f = \frac{e^3}{1 + e} \quad (38)$$

where:
e_f = void ratio function, dimensionless
e = void ratio, dimensionless
1 = unity

15.20 *Inflow/Outflow Ratio* [col. (38)].–Calculate inflow/outflow ratio.

$$QR = \frac{QI}{QO} \quad (39)$$

where:
QR = inflow/outflow ratio, dimensionless
QI = inflow volume, in³
QO = outflow volume, in³

16. Report

16.1 The report is to consist of the following completed and checked forms:

"Back-Pressure Permeability Test–Data Sheet(s)" (figs. 5 and 7).

"Back-Pressure Permeability–Data Sheet 2" (fig. 4).

16.2 A table of summary information and plot of coefficient of permeability versus a function of void ratio may be presented (figs. 8 and 9).

16.3 All calculations are to show a checkmark and all plotting must be checked.

17. Background Reference

Wenzel, L. K., *Methods for Determining Permeability of Water-Bearing Materials*, U.S. Geological Survey, Water-Supply paper 887, Washington, D.C., pp. 66-68, 1942.

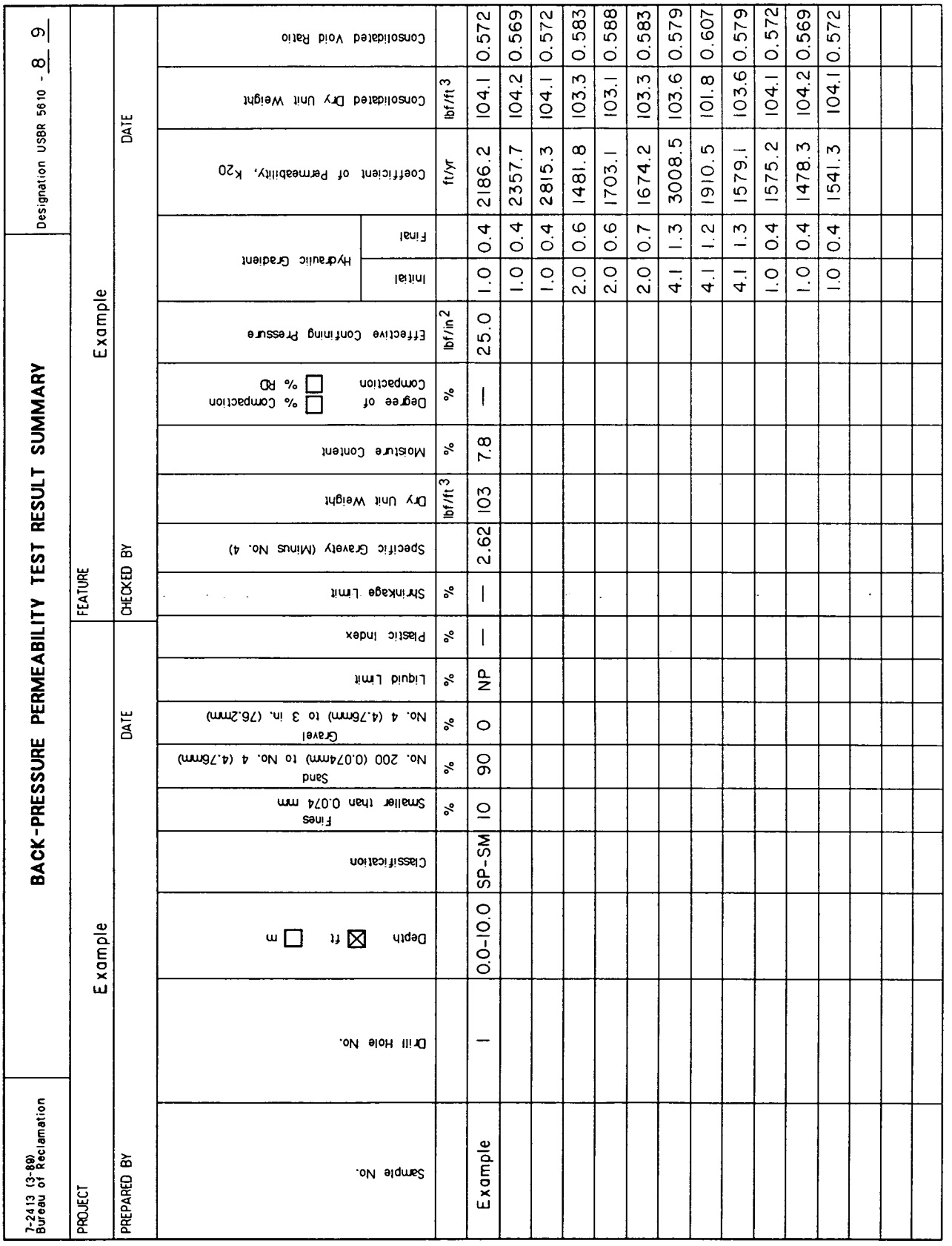

7-2413 (3-89) Bureau of Reclamation

BACK-PRESSURE PERMEABILITY TEST RESULT SUMMARY

Designation USBR 5610 - 8 9

PROJECT: Example — FEATURE: Example

PREPARED BY — DATE — CHECKED BY — DATE

Sample No.	Drill Hole No.	Depth ☒ ft ☐ m	Classification	Fines Smaller than 0.074 mm	Sand No. 200 (0.074mm) to No. 4 (4.76mm)	Gravel No. 4 (4.76mm) to 3 in. (76.2mm)	Liquid Limit	Plastic Index	Shrinkage Limit	Specific Gravity (Minus No. 4)	Dry Unit Weight	Moisture Content	Degree of ☐ % Compaction ☐ % RD Compaction	Effective Confining Pressure	Hydraulic Gradient Initial	Hydraulic Gradient Final	Coefficient of Permeability, k_{20}	Consolidated Dry Unit Weight	Consolidated Void Ratio
				%	%	%	%	%	%		lbf/ft^3	%	%	lbf/in^2			ft/yr	lbf/ft^3	
Example	1	0.0-10.0	SP-SM	10	90	0	NP	—	—	2.62	103	7.8	—	25.0	1.0	0.4	2186.2	104.1	0.572
															1.0	0.4	2357.7	104.2	0.569
															1.0	0.4	2815.3	104.1	0.572
															2.0	0.6	1481.8	103.3	0.583
															2.0	0.6	1703.1	103.1	0.588
															2.0	0.7	1674.2	103.3	0.583
															4.1	1.3	3008.5	103.6	0.579
															4.1	1.2	1910.5	101.8	0.607
															4.1	1.3	1579.1	103.6	0.579
															1.0	0.4	1575.2	104.1	0.572
															1.0	0.4	1478.3	104.2	0.569
															1.0	0.4	1541.3	104.1	0.572

Figure 8. – Back-pressure permeability test result summary — example.

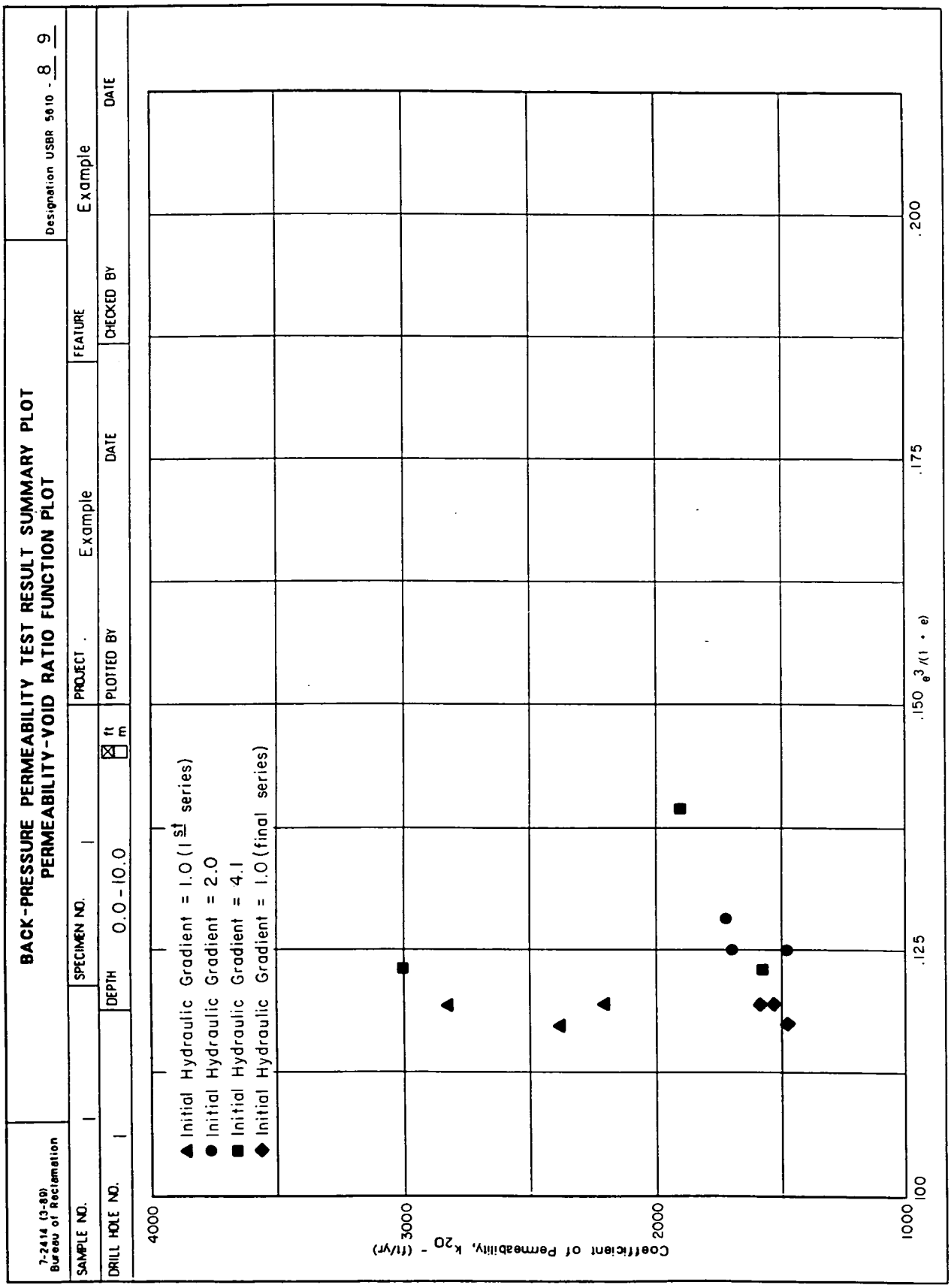

Figure 9. - Back-pressure permeability test result summary plot (permeability–void ratio function plot) — example.

APPENDIX

X1. BACK PRESSURE PERMEABILITY EQUIPMENT DRAWINGS

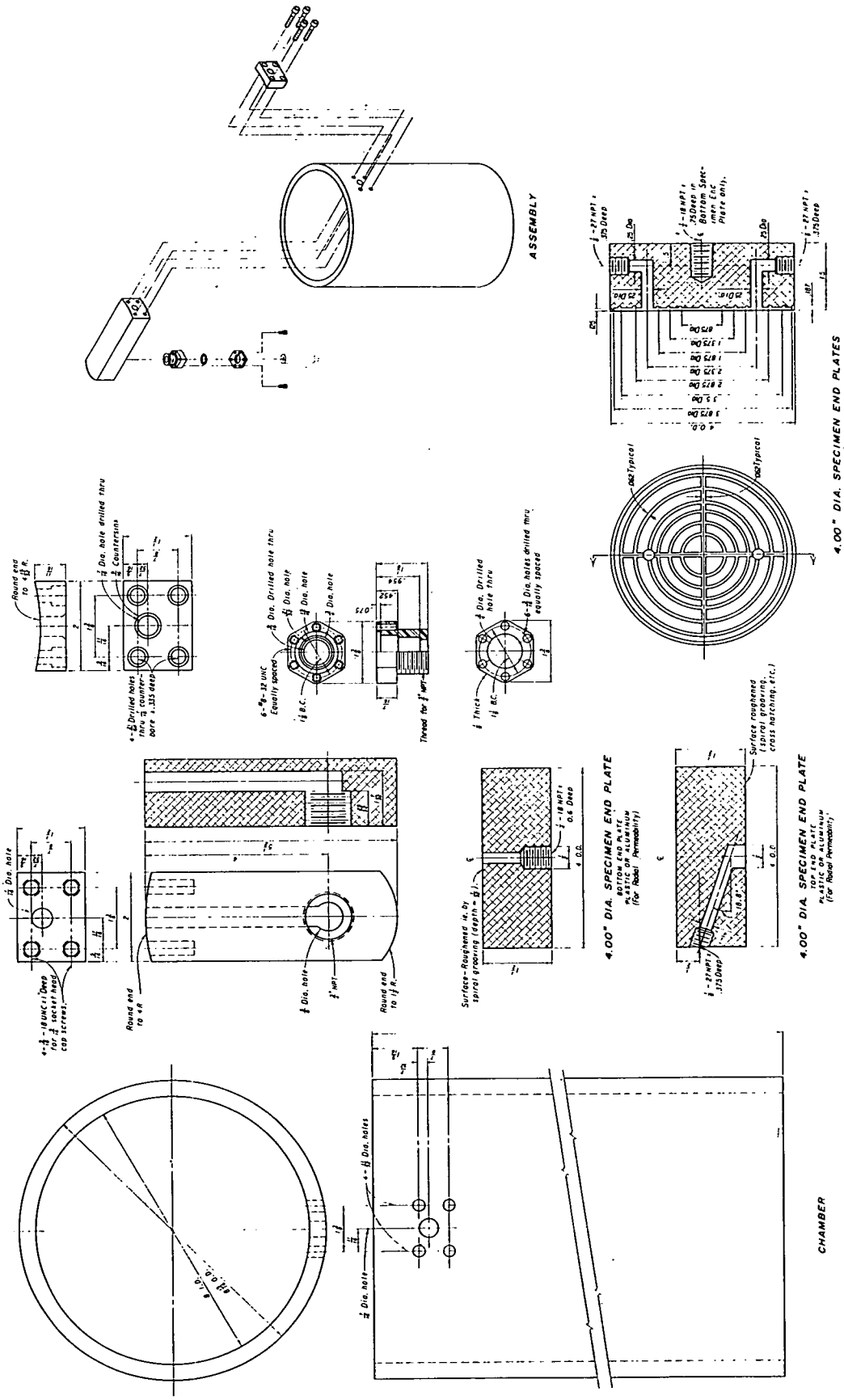

Figure X1.1.–Back-pressure permeability test chamber—details.

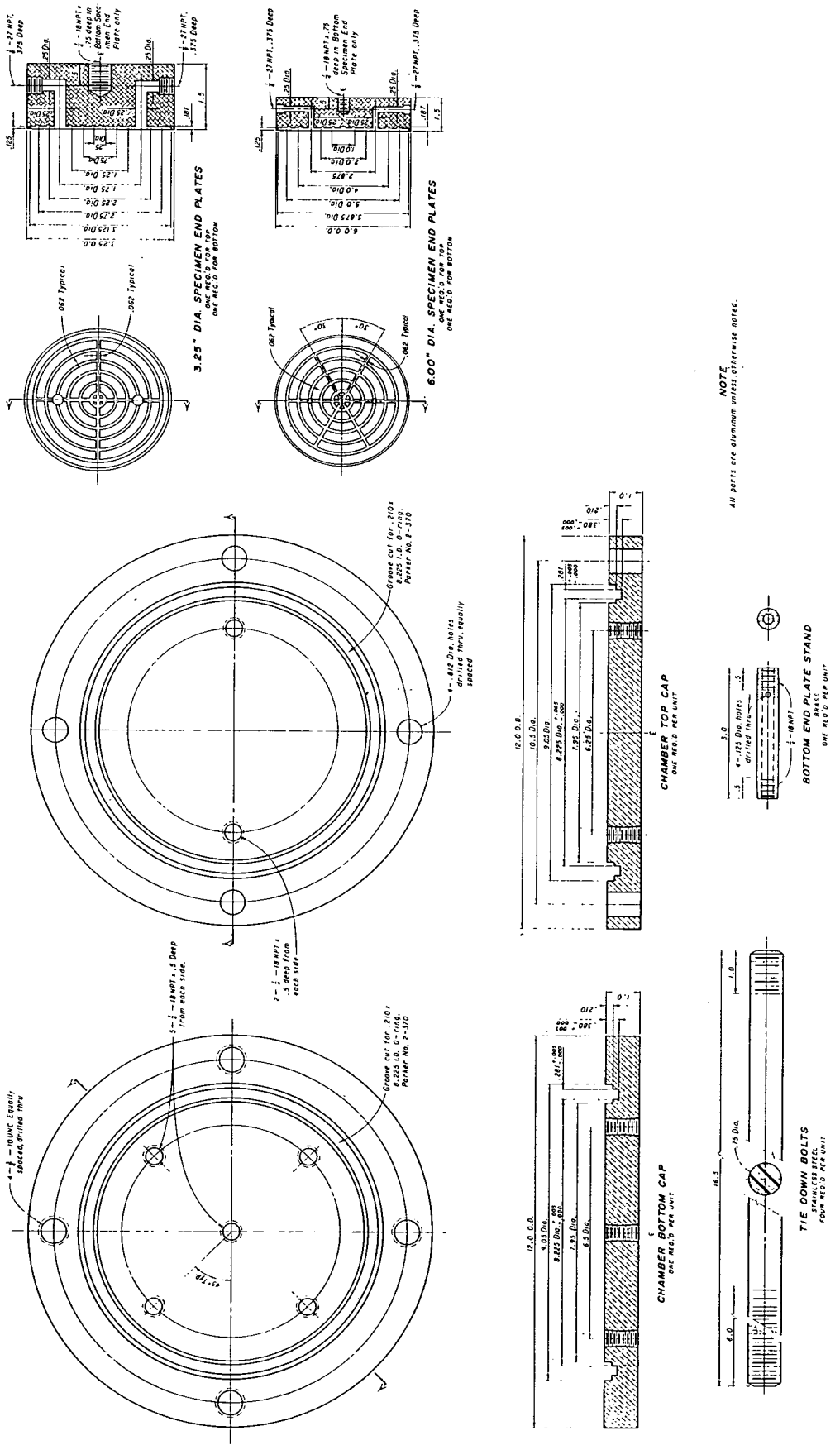

Figure X1.2.–Back-pressure permeability test chamber—details — Continued.

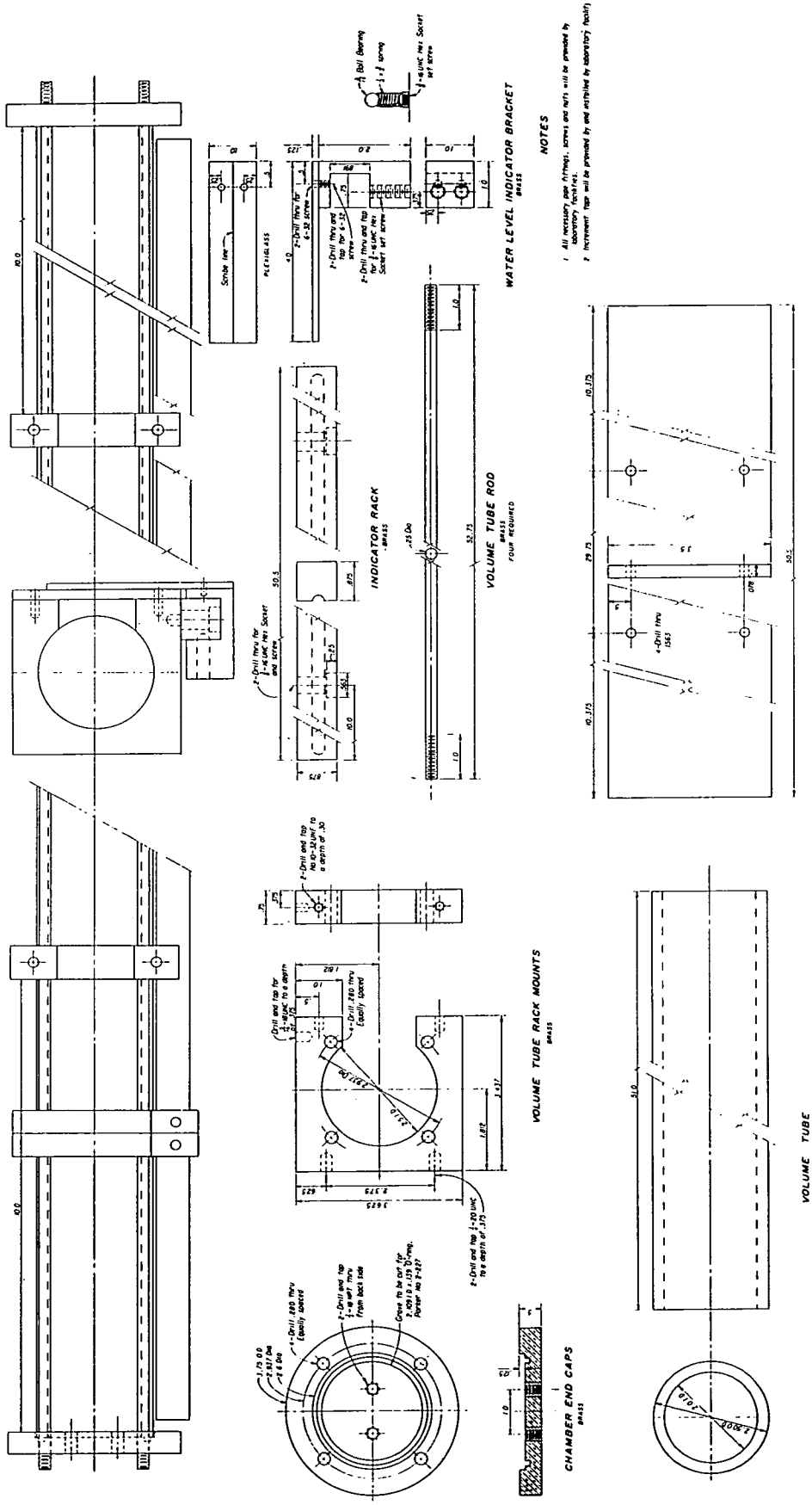

Figure X1.3.–Back-pressure permeability test—head tank—volume tube assembly details.

X2. COEFFICIENT OF PERMEABILITY DERIVATION (Falling Headwater-Rising Tailwater)

X2.1 Scope

X2.1.1 This appendix describes the derivation of the equation used to calculate the coefficient of permeability for the falling headwater-rising tailwater permeameters as derived by L. K. Wenzel.

X2.1.2 According to Darcy's Law, the quantity of water, dQ, that will flow through the saturated specimen in the time, dt, is:

$$dQ = \frac{kAH}{L}\,dt \qquad \text{(X2-1)}$$

where:

dQ = incremental flow, L^3
dt = incremental time, T
k = coefficient of permeability, L/T
A = specimen cross-sectional area, L^2
H = head causing flow, L
L = specimen length, L

X2.1.3 The drop in water level, X_L, in the left head tank (headwater) in time, t, will be:

$$X_L = \frac{Q}{a_L} \qquad \text{(X2-2)}$$

where:

X_L = left head tank drop, L
Q = total flow volume, L^3
a_L = left head tank cross sectional area, L^2

and the rise in the water level, X_R, in the right head tank (tailwater/collection) will be:

$$X_R = \frac{Q}{a_R} \qquad \text{(X2-3)}$$

where:

a_R = right head tank cross-sectional area, L^2
X_R = right head tank rise, L

X2.1.4 Given H_i as the initial head and H as the head at any subsequent time:

$$H_i - H = X_L + X_R = \frac{Q}{a_L} + \frac{Q}{a_R} = \frac{Q\,(a_L + a_R)}{a_L\,a_R} \qquad \text{(X2-4)}$$

and

$$-d_H = \frac{a_L + a_R}{a_L\,a_R}\,dQ \qquad \text{(X2-5)}$$

where dH equals change in head from initial L.

Note that dH is negative because the head on the specimen is decreasing with time.
Substituting (X2.5) in (X2.1)

$$-\frac{a_L\,a_R\,dH}{(a_L+a_R)\,H} = \frac{kA}{L}\,dt \qquad \text{(X2-6)}$$

Integrating yields

$$-\frac{a_L\,a_R}{a_L + a_R}\ln H = \frac{kAt}{L} + C \qquad \text{(X2-7)}$$

where C equals integration constant.

X2.1.5 When $t = 0$, $H = H_i$

$$C = -\frac{a_L\,a_R}{a_L+a_R}(\ln H_i) \qquad \text{(X2-8)}$$

Substituting (X2.8) in (X2.7)

$$-\frac{a_L\,a_R}{a_L+a_R}\ln H = \frac{kAt}{L} - \frac{a_L\,a_R}{a_L+a_R}(\ln H_i) \qquad \text{(X2-9)}$$

Rearrange terms

$$k = \frac{L\,a_L\,a_R}{A\,t\,(a_L+a_R)}\left(\ln \frac{H_i}{H_f}\right) \qquad \text{(X2-10)}$$

X2.1.6 When $t = t_f$, $H = H_f$

$$k = \frac{L\,a_L\,a_R}{A\,t_f\,(a_L + a_R)}\left(\ln \frac{H_i}{H_f}\right) \qquad \text{(X2-11)}$$

where H_f equals final head on specimen, L.

It is noted that a similar equation is derived in, *Permeability Tests With the Permeant Water Under Pressure* by C. W. Jones, in Bureau of Reclamation Report EM-559 (May 23, 1960).

X2.1.7 In terms of water level readings instead of hydraulic heads:

$$H_i = H_{Li} - H_{Ri} \qquad \text{(X2-12)}$$

and

$$H_f = H_{Lf} - H_{Rf} \qquad \text{(X2-13)}$$

then

$$k = \frac{a_L\,a_R}{a_L + a_R}\left(\frac{L}{At_f}\right)\ln \frac{H_{Li} - H_{Ri}}{H_{Lf} - H_{Rf}} \qquad \text{(X2-14)}$$

where:

H_{Li} = initial water level reading, left head tank, L
H_{Lf} = final water level reading, left head tank, L
H_{Ri} = initial water level reading, right head tank, L
H_{Rf} = final water level reading, right head tank, L
L = specimen length

X2.1.8 See figures X2.1 through X2.3.

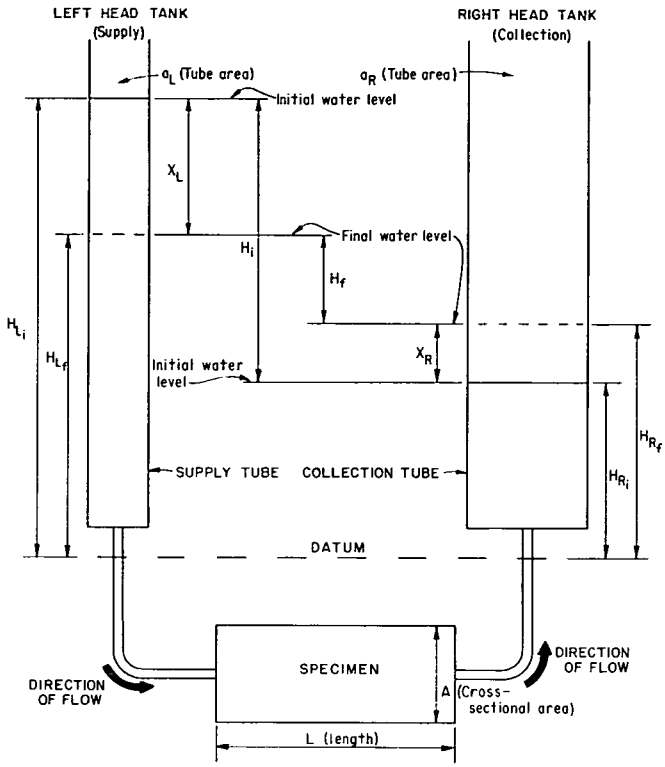

Figure X2.1.–Falling headwater–rising tailwater permeability test schematic.

$$k = \frac{L}{A\Delta t} A_c \left[\ln\left(\frac{H_i}{H_f}\right)\right] \mu_t \quad \text{, where } A_c = \left(\frac{a_t \cdot a_b}{a_t + a_b}\right) (\text{in}^2)$$

$H_i = (B_i - T_i)$ = Initial head (in)
$H_f = (B_f - T_i)$ = Head water drop (in)
T_i = Initial reading top end plate, head tank (in)
T_f = Final reading top end plate, head tank (in)
B_i = Initial reading bottom end plate, head tank (in)
B_f = Final reading bottom end plate, head tank (in)
μ_t = Temperature correction

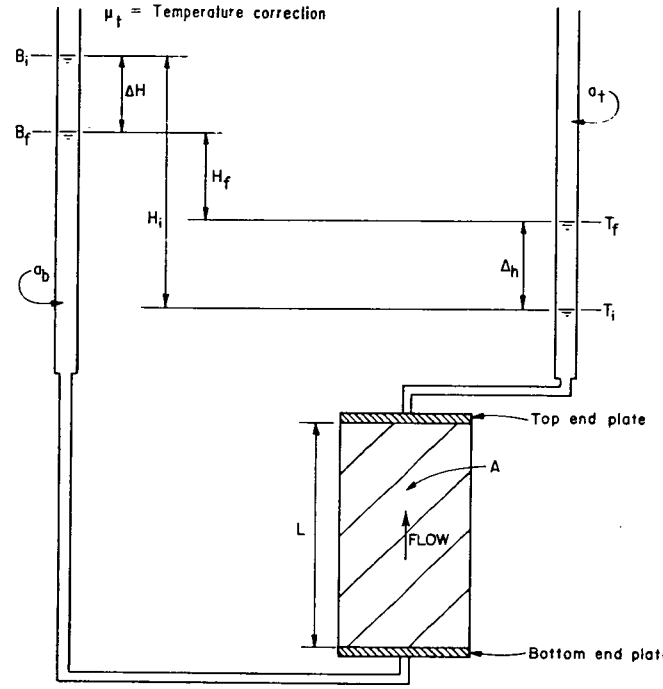

Figure X2.2.–Falling head permeameter with rising tailwater (flow from bottom end plate to top end plate).

$$k = \frac{L}{A\Delta t} A_c \left[\ln\left(\frac{H_i}{H_f}\right)\right] \mu_t \text{ , where } A_c = \left(\frac{a_t \cdot a_b}{a_t + a_b}\right) (in^2)$$

H_i = $(B_i - T_i)$ = Initial head (in)
H_f = $(B_f - T_i)$ = Head water drop (in)
T_i = Initial reading top end plate, head tank (in)
T_f = Final reading top end plate, head tank (in)
B_i = Initial reading bottom end plate, head tank (in)
B_f = Final reading bottom end plate, head tank (in)
μ_t = Temperature correction

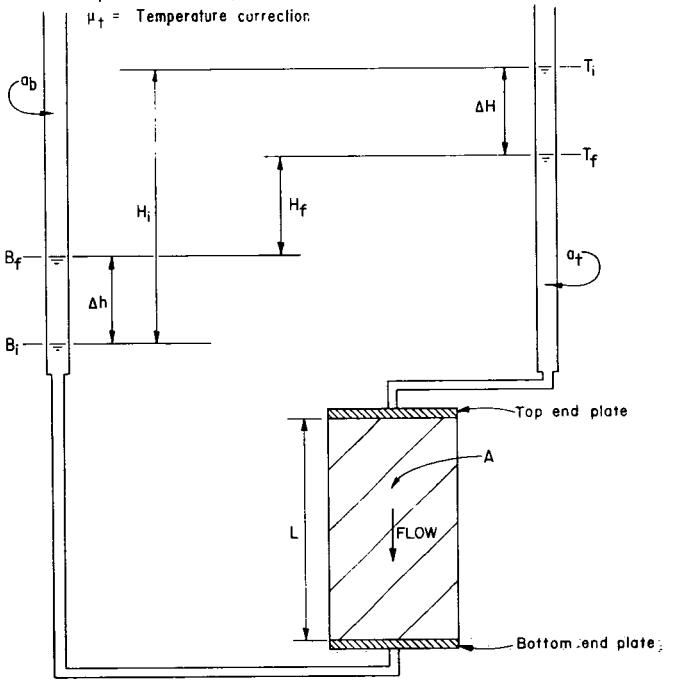

Figure X2.3.–Falling head permeameter with rising tailwater (flow from top end plate to bottom end plate).

UNITED STATES DEPARTMENT OF THE INTERIOR
BUREAU OF RECLAMATION

USBR 5615-89

PROCEDURE FOR

PERFORMING RADIAL VACUUM PERMEABILITY TEST FOR SOIL-CEMENT OR POROUS ROCK

INTRODUCTION

This procedure is under the jurisdiction of the Geotechnical Services Branch, code D-3760, Research and Laboratory Services Division, Denver Office, Denver, Colorado. The procedure is issued under the fixed designation USBR 5615. The number immediately following the designation indicates the year of acceptance or the year of last revision.

1. Scope

1.1 This designation outlines the procedure for performing the radial vacuum permeability test on soil-cement or porous rock specimens. This test method is used to determine the lateral permeability of cylindrical test specimens subjected to a vacuum. This procedure may be used to determine the permeability of homogeneous material, or to determine waterflow through a transverse joint in the specimen.

1.2 The procedure requires de-aired water and an effluent head under vacuum, which minimizes air entrapment in the specimen voids.

1.3 This procedure also may be used for other materials which retain their shape when immersed in water. Materials of very low permeability may require smaller specimen dimensions to decrease the length of flow through the specimens. Also, the amount of vacuum that can be applied to the specimen may limit the head that can be used to cause a measurable flow of water.

2. Applicable Documents

2.1 *USBR Procedures*:

USBR 1040 Calibrating Pressure Gauges
USBR 1050 Calibrating Pressure Transducers
USBR 1455 Calibrating Volume and Drain Tubes

3. Summary of Method

3.1 The coefficient of permeability is determined using cylindrically shaped specimens under vacuum and constant head. The fluid flows radially inward through the specimen to a 1/2-inch-diameter (13 mm) hole drilled lengthwise through the vertical axis of the specimen. After the specimen is placed in the chamber, a vacuum is applied to the specimen through the centrally drilled hole, and the waterflow is measured during a given time interval. By knowing the vacuum, constant head, and the flow of water—during a specific time period—the coefficient of permeability is determined.

4. Significance and Use

4.1 The ability to accurately measure permeability characteristics of a given specimen is of great importance to design engineers. This procedure is to be used for that purpose and should be limited to the use of soil-cement or porous rock.

4.2 Specimens that erode or change shape during performance of the test should not be used.

5. Apparatus

5.1 *Equipment Unique to This Procedure* :

5.1.1 *Specimen Container.*–A clear plastic cylinder with bottom and top plates and water inlets and outlets as shown on figures 1 and 2. The cylinder should be able to hold one or more specimens.

NOTE 1.–An 8-inch-diameter by 8-inch-high (200- by 200-mm) cylinder is convenient for testing two to four specimens at once. This allows for average test results to be obtained.

5.1.2 *Volume Tube.*–A glass volume tube with graduated marks to obtain volume readings of specified accuracy. The tube contains the supply of de-aired water for connection to the plastic cylinder to keep the cylinder full of water during the permeability test.

5.1.3 *Specimen End Plates.*–Plastic end plates having a diameter equal to or slightly larger than that of the specimen ends. The top end plate is to have a hole in the center with a short plastic tube for connecting the top end plate, through the top of the plastic cylinder, to the vacuum source. Thick-walled plastic or rubber tubing is to be used for connections from the test specimen to the vacuum source. Use regular plastic or rubber tubing to connect the glass volume tube to the plastic cylinder.

5.1.4 *Vacuum Source.*–The vacuum is applied by a vacuum pump with some means of closely regulating the amount of vacuum.

5.1.5 *Vacuum Measurement Device.*–A Bourdon-type gauge, mercury manometer, or transducer capable of measuring vacuum sensitive to ±1 inch of water (0.25 kPa).

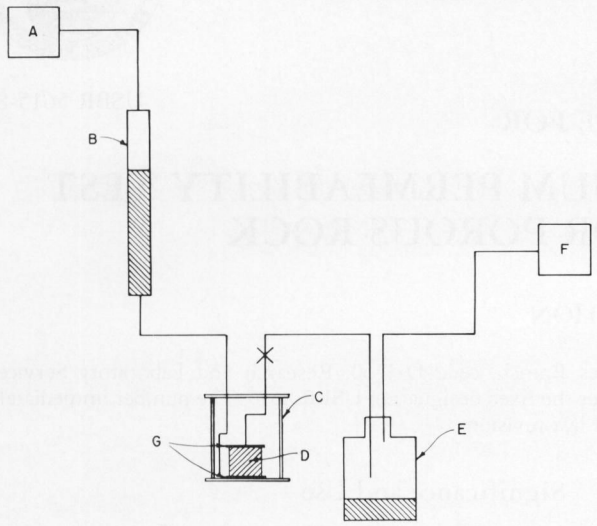

Figure 1. – Schematic of radial vacuum permeability test. A) pressure source and gauge, B) graduated volume tube, C) specimen container, D) specimen, E) graduated effluent container, F) vacuum source and gauge, G) specimen end plates, and ×) valve.

5.1.6 *Graduated Effluent Container.*–A graduated glass jar or other suitable container of 1- to 2-gallon (4- to 8-liters) capacity able to withstand one atmosphere of pressure.

6. Reagents and Materials

6.1 Distilled, de-aired water is to be used whenever the use of water is required.

7. Precautions

7.1 *Safety Precautions.*–Safety glasses should be worn when working near vacuum and pressure lines.

8. Sampling, Test Specimens, and Test Units

8.1 Obtain a cylindrical specimen as specified by the testing program. A specimen is generally 4 inches high by 4 inches (100 mm) in diameter.

8.1.1 A core of soil cement may be obtained. Trim the ends with a saw to provide a slightly rough surface for cementing the end plates to the specimen. Smooth other surfaces to remove rough spots that might affect test results.

8.1.2 There is no established procedure for preparing the specimen in a mold. The exact criteria depend upon testing requirements.

8.2 Drill a 1/2-inch-diameter hole ±1/8 inch (13 ±3 mm) through the vertical axis of the specimen. If necessary, the hole may be drilled before the specimen is trimmed.

8.3 Measure the specimen and record as shown on figure 3.

8.4 Cement the top and bottom end plates onto the specimen.

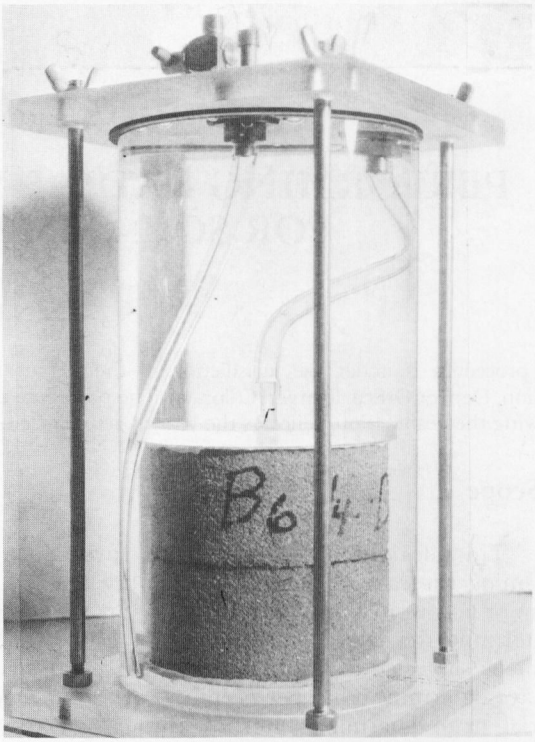

Figure 2. – Soil-cement test specimen placed in specimen container.

NOTE 2.–The cementing material should be an adhesive sealant which can be distributed evenly to cover surface irregularities and prevent waterflow between the end plates and the test specimen.

8.5 Take care not to plug the hole through the top end plate with cementing material. A small rod may be inserted through the tubing and end plate when the plate is pressed into place. However, make sure the rod can be removed after the cementing material is dry.

8.6 Allow the cementing material to dry thoroughly.

9. Calibration and Standarization

9.1 Verify that equipment is currently calibrated in accordance with the applicable calibration procedure. If the calibration is not current, perform the calibration before using the equipment for this procedure.

USBR 1040 Calibrating Pressure Gauges
USBR 1050 Calibrating Pressure Transducers
USBR 1455 Calibrating Volume and Drain Tubes

10. Conditioning

10.1 Not applicable, special conditioning requirements are not needed for this procedure.

11. Procedure

11.1 All data are to be recorded on the "Radial Vacuum Permeability Test for Soil-Cement or Porous Rock" form as shown on figure 3.

7-2326 (10-85) Bureau of Reclamation	RADIAL VACUUM PERMEABILITY TEST FOR SOIL-CEMENT OR POROUS ROCK	Designation USBR 5615 - 89
SAMPLE NO. 57G-10	SPECIMEN NO. 4	PROJECT Example
FEATURE Example	TESTED BY	DATE / CHECKED BY / DATE

		Units			Units
Specimen height, t	4.125	in	Specimen diameter	4.024	in.
Hole diameter	0.50	in	Volume tube area	0.119	$in.^2$
Radius of hole, r_1	0.25	in	Pressure head, h_o	3	ft.
Radius of specimen, r_2	2.012	in	Vacuum, h	-4	ft.
			$h_o - h$	7	ft.

Date	Time	Elapsed time (sec)	Volume tube reading (in.)	Change in volume tube reading (in.)	Volume change (ft^3)	Q (ft^3/s)	k (ft/yr)
2/14	9:36	----	0.40	----	----	----	----
	12:30	10,440	4.80	4.40	3.03×10^{-4}	2.90×10^{-8}	0.13
	12:35	----	4.80	----	----	----	----
	15:35	10,800	8.60	3.80	2.62×10^{-4}	2.43×10^{-8}	0.11
2/15	7:40	----	0.60	----	----	----	----
	10:40	10,800	4.90	4.30	2.96×10^{-4}	2.74×10^{-8}	0.12
	11:45	----	----	----	----	----	----
	14:45	10,800	9.00	4.10	2.82×10^{-4}	2.61×10^{-8}	0.11
2/16	7:30	----	0.20	----	----	----	----
	10:30	10,800	4.90	4.70	3.24×10^{-4}	3.00×10^{-8}	0.13

Remarks Average coefficient of permeability of 0.12 ft/yr.

GPO 848-761

Figure 3. – Radial vacuum permeability test for soil-cement or porous rock — example.

11.2 Place the test specimen(s) in the specimen container.

11.3 Assemble the apparatus as shown on figures 1 and 2.

11.4 Close the valve at the bottom of the volume tube. Fill the volume tube with fresh de-aired, distilled water.

11.5 Saturate the specimen:

11.5.1 The specimen is saturated by opening the valve at the bottom of the volume tube, which lets water into the specimen container. Slowly fill the container and saturate the specimen. Allow about 10 minutes to fill the container. Open the valve in the vacuum line leading to the specimen(s) and apply the specified vacuum.

11.5.2 Continue the saturation process until water has flowed through the specimen into the graduated effluent container and until air bubbles in the lines have disappeared.

11.6 Close the valve at the bottom of the volume tube and the valve on the vacuum line leading to the specimen(s).

11.7 Refill the volume tube with water.

11.8 With the valve between the specimen(s) and vacuum source closed, apply the specified vacuum.

11.9 Record the water level in the volume tube and open the valve at the bottom of the volume tube.

11.10 Record the time and start the test by opening the valve between the specimen(s) and the vacuum source.

11.11 Allow water to flow through the specimen(s) until the level in the volume tube has dropped approximately one-fifth the height of the tube.

11.12 After the required volume tube change, close the valve between the specimen(s) and the vacuum source, record the time and volume tube reading.

11.13 Repeat subparagraphs 11.8 through 11.12 until the specified number of trials has been completed.

NOTE 3.–About five trials are recommended for every filling of the volume tube.

12. Calculations

12.1 Determine the elapsed time.

$$T = T_c - T_i \quad (1)$$

where:

T = elapsed time, seconds
T_c = current time, seconds
T_i = initial time, seconds

12.2 Determine the change in volume tube readings.

$$V = V_c - V_i \quad (2)$$

where:

V = change in volume tube readings
V_c = current volume tube reading
V_i = initial volume tube reading

12.3 Determine the volume change.

$$V_v = \left(\frac{A_v V}{C}\right) \quad (3)$$

where:

V_v = change volume
A_v = area of volume tube
C = constant to convert to appropriate units (ft^3 or cm^3); when V is in inches and A_v is in square inches $C = 1{,}728$ and converts V_v to cubic feet (when V is in centimeters and A_v is in square centimeters, $C = 1$ and conversion is not necessary)

12.4 Determine the flow rate, Q.

$$Q = V_v / T \quad (4)$$

12.5 Determine the coefficient of permeability, k, (for a constant head test) (see also fig. 4).

$$k = \frac{Q \ln \left(\frac{r_2}{r_1}\right)}{2 \pi t (h_o - h)} \quad (5)$$

where:

Q = flow rate
r_2 = radius of specimen
r_1 = radius of hole in specimen
t = height of specimen
$h_o - h$ = head across specimen
h_o = head applied by pressure source
h = head applied by vacuum source
π = 3.14
ln = natural logarithm to the base e

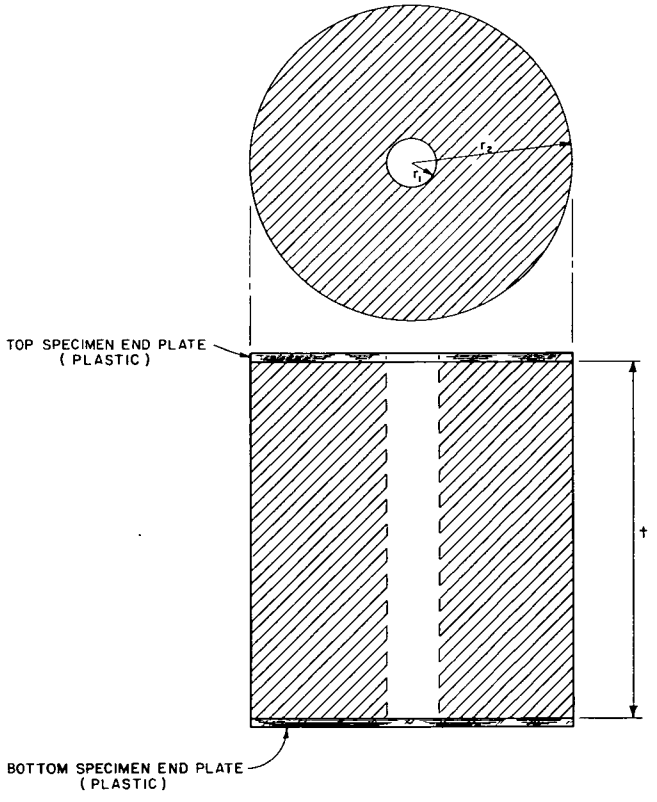

Figure 4. – Schematic showing specimen variables.

12.5.1 *Inch-Pound Units*:

$$k = \frac{Q' \ln \left(\frac{r_2}{r_1}\right)}{2 \pi t' (h_o - h)} \quad (6)$$

where:

k = coefficient of permeability, ft/yr
t' = specimen height, ft = $t/12$
t = specimen height, in
12 = change inch to foot
Q' = flow rate, ft³/yr = 31,536,000 Q
Q = flow rate, ft³/s
31,536,000 = change ft³/s to ft³/yr

12.5.2 *Metric Units*:

$$k = \frac{Q' \ln \left(\frac{r_2}{r_1}\right)}{2 \pi t (h_o - h)'} \quad (7)$$

where:

k = coefficient of permeability, cm/s
Q = flow rate cm³/s
t = specimen height, cm
$(h_o - h)'$ = 100 $(h_o - h)$
$(h_o - h)'$ = head across sample, cm
h_o - h = head across sample, m
100 = change m to cm

13. Report

13.1 The report is to consist of a completed and checked "Radial Vacuum Permeability Test for Soil-Cement or Porous Rock" form (fig. 3).

13.2 All calculations are to show a checkmark.

UNITED STATES DEPARTMENT OF THE INTERIOR
BUREAU OF RECLAMATION

USBR 5630-89

PROCEDURE FOR

PERFORMING FILTER TESTING

INTRODUCTION

This procedure is under the jurisdiction of the Geotechnical Services Branch, code D-3760, Research and Laboratory Services Division, Denver Office, Denver, Colorado. The procedure is issued under the fixed designation USBR 5630. The number immediately following the designation indicates the year of acceptance or the year of last revision.

1. Scope

1.1 This designation outlines the laboratory procedure for evaluating suitability of a soil material or geotextile to perform as a filter.

1.2 The procedure is applicable for soil intended to perform as filters for pipe drains, canal underdrains and linings, and filter zones in the foundation and internal zonings of earth embankment dams.

1.3 The procedure is used to determine if a soil or geotextile can prevent unrestrained erosion of an adjacent material that has a finer particle size distribution, while maintaining adequate hydraulic conductivity to prevent excess hydrostatic pressure.

2. Auxiliary Tests

2.1 Test samples must be prepared in accordance with USBR 5205 prior to performing this procedure. The moisture content, particle size distribution, liquid limit, plastic limit and plasticity index, specific gravity, moisture–unit weight relationship, and/or minimum and maximum index unit weights of the soils must be determined in accordance with USBR 5300, 5325 and/or 5330, 5320, 5360, 5500 and/or 5525, and 5530, respectively. These tests must be performed to prepare test specimens and to select placement conditions for the filter test. Permeability of soils should be determined in accordance with USBR 5600, 5605, and/or 5610. Durability of soil filter materials should be evaluated prior to performing the filter test to identify friable materials that could undergo significant particle-size breakdown due to construction processes and thereby diminish their effectiveness as a filter. The Los Angeles abrasion test [1][1] and/or the sand attrition test [2] can provide information about the breakdown of a soil filter material. The soundness or ability of sands and gravels to resist weathering can be determined by sodium sulphate testing [3].

3. Applicable Documents

3.1 *USBR Procedures*:

USBR 1000 Standards for Linear Measurement Devices
USBR 1010 Calibrating Unit Weight Measures
USBR 1012 Calibrating Balances or Scales
USBR 1020 Calibrating Ovens
USBR 1025 Checking Sieves
USBR 3000 Using Significant Digits in Calculating and Reporting Laboratory Data
USBR 3900 Standard Definitions of Terms and Symbols Relating to Soil Mechanics
USBR 5000 Determining Unified Soil Classification (Laboratory Method)
USBR 5005 Determining Unified Soil Classification (Visual Method)
USBR 5205 Preparing Soil Samples by Splitting or Quartering
USBR 5210 Preparing Compacted Soil Specimens for Laboratory Use
USBR 5300 Determining Moisture Content of Soil and Rock by the Oven Method
USBR 5320 Determining Specific Gravity of Soils
USBR 5325 Performing Gradation Analysis of Gravel Size Fraction of Soils
USBR 5330 Performing Gradation Analysis of Fines and Sand Size Fraction of Soils, Including Hydrometer Analysis
USBR 5350 Determining the Liquid Limit of Soils by the One-Point Method
USBR 5360 Determining the Plastic Limit and Plasticity Index of Soils
USBR 5500 Performing Laboratory Compaction of Soils — 5.5-lbm Rammer and 18-in Drop
USBR 5515 Performing Laboratory Compaction of Soils Containing Gravel
USBR 5525 Determining the Minimum Index Unit Weight of Cohesionless Soils
USBR 5530 Determining the Maximum Index Unit Weight of Cohesionless Soils
USBR 5600 Determining Permeability and Settlement of Soils [8-in (203-mm) Diameter Cylinder]
USBR 5605 Determining Permeability and Settlement of Soils Containing Gravel
USBR 5610 Determining Permeability of Soils by the Back Pressure Test Method
USBR 5890 Preparing Laboratory Bentonitic Slurry Sample
USBR 5891 Determining Coarse-Grained Portion of a Slurry by the Sand Content Test Method
USBR 5894 Determining Slurry Viscosity by the Marsh Funnel Test Method

[1] Number in brackets refers to the reference.

4. Summary of Method

4.1 A material—either soil or geotextile—that is designated to perform as a filter for a soil material, is compacted (soil) or placed (geotextile) in a test cylinder at conditions simulating those expected in the field application. The soil material, which is to be protected from erosion by the filter material, is referred to as the "base" material.

The base material can be tested either as a compacted specimen of soil or as a soil-water slurry. If the base material is a compacted soil specimen, it can be compacted in a solid cylindrical segment and placed on top of the filter material, or it can be placed on top of the filter material and then compacted. If the base material is cohesive, cylindrical holes are drilled through the compacted base specimen to provide seepage paths for base material to move into the filter. Water is then percolated downward through the compacted base specimen into the filter specimen under varying hydraulic heads. If the base material is a soil-water slurry specimen, the slurry is placed on top of the filter specimen and water is percolated through the slurry base specimen into the filter specimen under varying hydraulic heads.

The filter test configurations are shown on figure 1. For both types of base specimens, the volume of effluent from the system is measured at varying time intervals and recorded; and the visual turbidity of the effluent is determined and recorded. The total accumulated effluent volume is plotted as a function of total test time. Upon completion of testing, the base specimen is excavated and the base-filter interface inspected. The filter specimen is excavated in layers, and particle size analyses may be performed on portions of the filter specimen. The results are integrated into a qualitative assessment of the filter specimen performance.

Filter Test Configurations

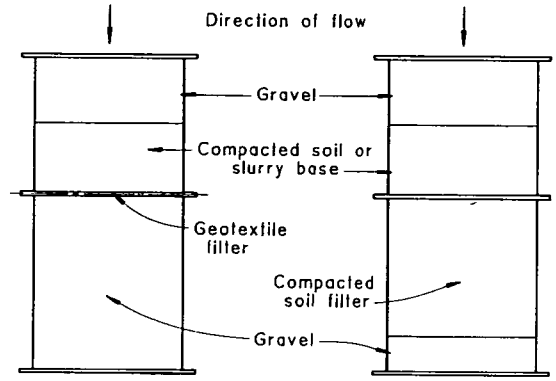

(a) Acrylic Cylinder System (subpar. 8.2.1.1)

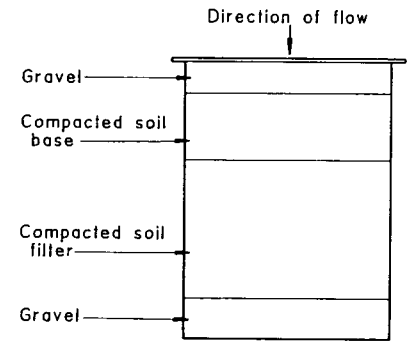

(b) Aluminum Cylinder System (subpar. 8.2.1.2)

Figure 1. – Filter test configurations.

5. Significance and Use

5.1 The filter test is performed to obtain data to evaluate the performance of a soil or geotextile filter.

5.2 Test results are both quantitative and qualitative and combined to determine the suitability of a soil or geotextile filter.

5.3 Conditions used in the filter test on a cohesive base material represent severe field conditions that simulate a crack (open seepage path) through the cohesive base material directly into the filter material.

5.4 The test does not ensure or assume that base and filter materials are saturated.

5.5 Filter test results are used to verify filter designs or design changes, and to study soil and equipment behavior to improve test equipment and techniques.

6. Terminology

6.1 Definitions are in accordance with USBR 3900.

6.1.1 *Hydraulic Gradient* (i).–Loss in hydraulic head per unit distance of flow, $\Delta H/\Delta L$ (ASTM definition).

6.1.2 *Percent Compaction.*–The ratio, expressed as a percentage of: (1) dry unit weight of a soil, to (2) maximum dry unit weight obtained in a laboratory compaction test (ASTM).

6.1.3 *Percent Saturation* (S_r).–The ratio, expressed as a percentage of: (1) the volume of water in a given soil or rock mass, to (2) the total volume of intergranular space (voids) (ASTM).

6.1.4 *Piping.*–The progressive removal of soil particles from a mass of soil by percolating water leading to the development of channels called "pipes" (ASTM).

6.1.5 *Relative Density* (D_d).–The ratio of: (1) the difference between the void ratio of a cohesionless soil in the loosest state and any given void ratio, to (2) the difference between the void ratios in the loosest and densest states.

6.2 Terms not included in USBR 3900 specific to this designation are:

6.2.1 *Base Material.*–The soil that is to be protected from erosion and drained by the filter material.

6.2.2 *Base Specimen.*–That portion of the base material in contact with the filter specimen. The base specimen can be either compacted soil or a soil-water slurry.

6.2.3 *Effluent.*–Fluid discharge from filter test.

6.2.4 *Filter Material.*–A layer or combination of layers of soil and/or geotextiles designed and installed to provide drainage, yet prevent movement of soil particles due to flowing water.

6.2.5 *Filter Specimen.*–That portion of the filter material in contact with the base specimen.

6.2.6 *Filter Test Cylinder System.*–Refers to the cylinder(s) (acrylic or aluminum) in which the specimen is placed during performance of the filter test.

6.2.7 *Geotextile.*–A synthetic fabric membrane designed to exhibit specific properties in a soil environment.

6.2.8 *Gravel Layer.*–A layer of fine gravel of minus 3/8-inch (9.5 mm) U.S.A. Standard sieve size placed in the top and bottom of the filter test cylinder system.

6.2.9 *Particle Size,* d_{15}.–The particle size (in millimeters) of a soil of which 15 percent by dry weight of soil particles are smaller.

7. Interferences

7.1 Erroneous flow rates and fluctuations in flow rates during the test can result from:

7.1.1 Changes in the permeant water viscosity because of changes in ambient air and/or water supply temperatures.

7.1.2 Changes in filter specimen permeability because of changing percentage of soil saturation caused by changes in the filter specimen percent saturation due to entrained air absorbed in the water going out of solution and depositing in soil voids.

7.1.3 Piping of water between the soil-cylinder interface because of poor sealing between the compacted specimen and the cylinder wall.

8. Apparatus

8.1 *General Apparatus*:

8.1.1 *Balance or Scale.*–A typical balance or scale used for this designation must be readable to 0.1 lbm and have a capacity of about 100 lbm.

8.1.2 *Bags.*–20 and 80 quart (23 and 91 L), moisture proof plastic bags.

8.1.3 *Drying Oven.*–Thermostatically controlled, preferably of the forced draft type, and capable of maintaining a uniform temperature of 230±9 °F (110±5 °C) throughout the drying chamber.

8.1.4 *Mixer.*–Electrically operated mechanical mixer with paddle or wire whisk, 3 to 5 gallon (14 to 23 L) capacity.

8.1.5 *Rule.*–Engraved metal or hardwood rule, calibrated in millimeters.

8.1.6 *Sieve.*–U.S.A. Standard series No. 4 (4.75 mm) sieve, conforming to the requirements of ASTM E 11.

8.1.7 *Straightedge.*–A stiff metal straightedge, 20 inches (500 mm) long. The scraping edge must be beveled if it is thicker than 1/8 inch (3 mm).

8.1.8 *Tamper.*–Metal tamper having a circular tamping surface and a minimum end area of 12 in^2 (7700 mm^2).

8.2 *Equipment Unique to This Procedure* (fig. 2):

8.2.1 *Filter Test Cylinder System.*–Two configurations of filter test cylinder systems are available. The type of system used depends on several factors: (a) maximum particle size of filter material, (b) type of filter (single zone or staged), and (c) amount of base and filter materials available for testing. A discussion of criteria for selecting the appropriate cylinder system is included in appendix X1. Test equipment is shown on figure 2.

8.2.1.1 *Acrylic Cylinder System*:

8.2.1.1.1 *Acrylic Cylinder Segments.*–12- or 15-inch high by 11-1/2-inch diameter by 1/4-inch thick clear acrylic cylinders [305- or 381- (high) by 292- (dia.) by 6.3-mm (thick) cylinders and 6.3- by 51-mm flanges] having 1/4-inch thick by 2-inch wide flanges on both ends. Holes equispaced around the perimeter of the flanges allow for joining additional cylinder segments and/or top or bottom plates.

8.2.1.1.2 *Top Plate.*–A 15-inch diameter by 1/4-inch (381- by 6.3-mm) thick clear acrylic plate. Holes are equispaced around the perimeter of the plate for fastening to the cylinder segment flange. A 1-inch diameter NPT (National pipe thread) threaded hole in the center of the plate is plumbed to the constant head tank water

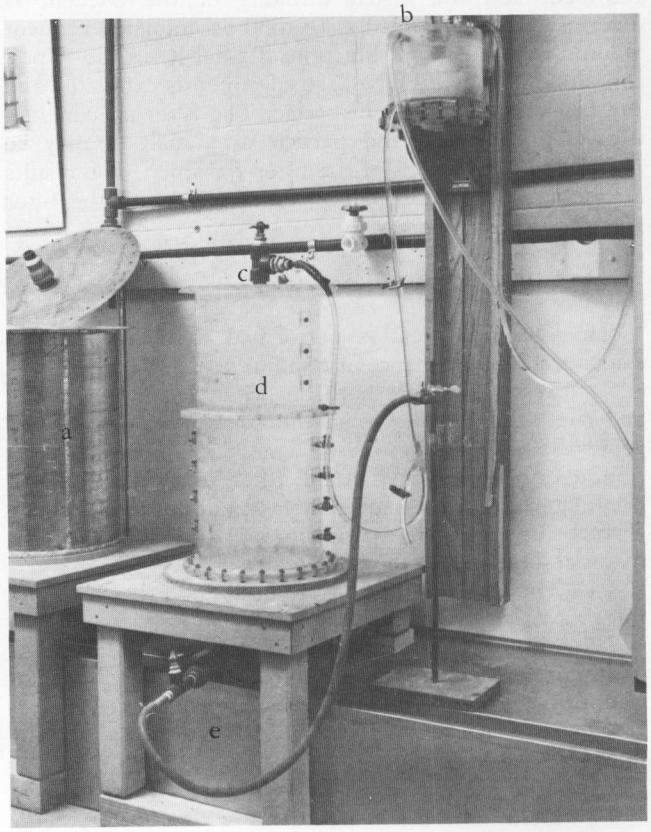

Figure 2. – Filter test cylinder system. a) aluminum test cylinder system, b) adjustable constant head tank, c) inflow plumbing, d) acrylic test cylinder system, and e) outflow plumbing.

supply system, and a 1/4-inch (6.3-mm) diameter NPT threaded hole is plumbed to a stopcock valve.

8.2.1.1.3 *Bottom Plate.*–A 15-inch diameter by 1/4-inch (381- by 6.3-mm) thick clear acrylic plate. Holes are equispaced around the perimeter of the plate for fastening to the cylinder segment flange. A 1-inch-diameter NPT threaded hole in the center of the plate is plumbed to the outflow system.

8.2.1.2 *Aluminum Cylinder System*:

8.2.1.2.1 *Aluminum Cylinder.*–A 23-1/2-inch high by 17-3/4-inch diameter by 1/4-inch thick aluminum cylinder [597- (high) by 451- (dia.) by 6.3-mm (thick) cylinder]. The bottom plate is welded to the cylinder, and a 1-inch-diameter NPT threaded hole is located in the center of the bottom plate. The hole is plumbed to the outflow system. The top of the cylinder has a 1/4-inch thick by 1-3/4-inch (6.3- by 44-mm) wide flange; holes are equispaced around the perimeter of the flange to allow for joining the top plate.

8.2.1.2.2 *Top Plate.*–A 22-inch diameter by 1/4-inch (559- by 6.3-mm) thick aluminum plate. Holes are equispaced around the perimeter of the plate for fastening to the cylinder flange. A 1-inch-diameter NPT threaded hole in the center of the plate is plumbed to the constant head water supply system.

8.2.2 *Inflow System*:

8.2.2.1 *Constant Head Water Supply Tank.*–A water tank system that controls water inflow by a flat valve and overflow tube. The supply tank is mounted so it can be moved in the vertical direction.

8.2.2.2 *Plumbing.*–Consisting of flexible tubing, pipe, elbows, reducers, and valves to provide (a) a shutoff valve for the constant head water supply tank, and (b) a stopcock valve for de-airing the inflow plumbing system.

8.2.3 *Outflow System Plumbing.*–Pipe, elbows, reducers, valves, and flexible tubing required to provide (a) a shutoff valve for the outflow system, (b) a stopcock valve for de-airing the outflow plumbing system, and (c) a vertically adjustable tailwater.

8.2.4 *Wire Screens.*–A U.S.A. Standard series No. 30 (600-mm) sieve (wire mesh), 11-1/2 or 17-3/4-inch (292- or 451-mm) diameter, and a No. 4 (4.75-mm) sieve size wire mesh screen, 11-1/2- or 17-3/4-inch diameter.

9. Reagents and Materials

9.1 Tapwater that is free of acids, alakalies, or oils and is suitable for drinking should be used for wetting the soil prior to compaction and for percolating through the specimen during the test.

9.2 De-aired water should be used for saturating the test specimen prior to performing the filter test.

10. Precautions

10.1 *Safety Precautions*:

10.1.1 The surface on which the test specimen is compacted must be strong enough to support the compactive effort.

10.1.2 Two persons should move the compacted test specimens to prevent a possible lifting injury.

10.1.3 This designation may involve hazardous materials, operations, and equipment.

10.2 *Technical Precautions*:

10.2.1 The filter specimen gravel base should be washed to remove fines before placing.

10.2.2 The surface of the holes drilled through a compacted cohesive base material should be roughened and scarified before introducing water into the base material.

10.2.3 The outflow system should be flushed with water to remove any sediments or air in the system.

10.2.4 The inflow system should be flushed with water to remove any air in the system.

10.2.5 Due to the effects of sampling, handling, processing, and testing on some materials, results of this test may not reflect in-place conditions or the properties of the material after processing and placement during construction. Of particular concern are materials such as soft and/or friable decomposed granite, sandstone, shale, limestone, claystone, etc., or soils affected by air and/or ovendrying. Such material must be identified before processing and the person requesting the test should verify whether standard procedures are to be followed, whether modifications are appropriate, or whether the material should be processed and tested at all. Cautionary statements must be made on test data forms and in reporting the test data.

11. Sampling, Test Specimens, and Test Units

11.1 *Sample Preparation.*–Prepare test samples of the base and filter materials in accordance with USBR 5205.

11.2 *Specimen Preparation*:

11.2.1 Select the proper filter test cylinder system using the guidelines and criteria in appendix X1.

11.2.2 Air dry the following quantities of soil (the amount depends on filter test cylinder system and filter configuration selected):

11.2.2.1 For the 11-1/2-inch (292-mm) diameter acrylic cylinder system (refer to subpar. 8.2.1.1):

Base material . . . 50 lbm (22.7 kg)
Filter material . . . 100 lbm (45.4 kg) per 12-inch (305-mm) high layer of filter specimen

11.2.2.2 For the 17-3/4-inch (451-mm) diameter aluminum cylinder system (refer to subpar. 8.2.1.2):

Base material . . . 125 lbm (56.7 kg)
Filter material . . . 225 lbm (102 kg)

NOTE 1.–If there is not enough filter or base material available, the thickness of the base and filter specimens can be reduced. However, the base specimen should not be less than 3.1 inches (80 mm) thick.

11.2.3 Prepare the base and filter materials for compaction in accordance with USBR 5210.

11.2.4 Determine the mass of soil required for either a compacted or a slurry base specimen and filter specimen in accordance with the procedure outlined in appendix X2.

11.2.5 Thoroughly mix the material for each lift of filter or base specimen to obtain an even distribution of particle sizes and moisture throughout.

11.2.6 Place each lift of base material in a plastic, moistureproof bag, and store in accordance with the following standing times:

Classification USBR 5005	*Minimum standing time, hours*
GP, SP, GM, GW	- -
GP-GM, GP-GC, GM-GM, GW-GC	- -
SP-SM, SP-SC, SW-SM, SW-SC	- -
SM	3
ML, CL, OL, SC	18
MH, CH, OH, Pt	36

12. Preparation of Apparatus

12.1 Prior to preparing the test apparatus, calibrate all necessary equipment according to paragraph 13.

12.2 Carefully inspect the filter test cylinder system selected in subparagraph 11.2.1, and repair or replace damaged parts. Thoroughly remove grease from the flanges of the filter test cylinders or cylinder segments, and flush the inflow and outflow plumbing systems with water.

12.3 *Assemble the Selected Filter Test Cylinder System*:

12.3.1 *Acrylic Cylinder System* (refer to subpar. 8.2.1.1):

12.3.1.1 Place bottom plate on the cylinder support stand and connect outflow plumbing assembly to center hole.

12.3.1.2 Spread a small amount of water-resistant sealing grease around the outside perimeter of the top surface of the bottom plate.

12.3.1.3 Place a 15-inch (381-mm) high acrylic cylinder segment on the bottom plate, and align the holes.

12.3.1.4 Insert bolts with washers through the holes in the perimeter of the bottom plate and cylinder flange.

12.3.1.5 Fasten the bolts with washers and wingnuts; fasten the bolts evenly to compress the sealing grease and prevent cracking the flange. Inspect the seal; if gaps are visible in the sealing grease remove the cylinder segment and repeat subparagraphs 12.3.1.2 through 12.3.1.4.

12.3.2 *Aluminum Cylinder System* (refer to subpar. 8.2.1.2):

12.3.2.1 Place the aluminum cylinder on the cylinder support stand.

12.3.2.2 Connect the outflow plumbing assembly to the center hole in the bottom of the aluminum cylinder.

12.4 Place a 3-inch (75-mm) diameter No. 4 (4.75-mm) sieve size screen over the outflow orifice.

13. Calibration and Standardization

13.1 Verify that equipment is currently calibrated in accordance with the applicable calibration procedure. If the calibration is not current, perform the calibration before using the equipment for this procedure:

USBR 1000 Standards for Linear Measurement Devices
USBR 1012 Calibrating Balances or Scales
USBR 1020 Calibrating Ovens
USBR 1025 Checking Sieves

14. Conditioning

14.1 Place material for each soil specimen as prepared in subparagraph 11.1 in a moistureproof plastic bag (soil) or a plastic pail (soil slurry). Store the specimens in accordance with minimum standing times outlined in subparagraph 11.2.6.

15. Procedure

15.1 All data are to be recorded on the "Filter Test Configuration Data" forms (figs. 3, 5, and 6; sheets 1, 2A, and 2B respectively), and on the "Filter Test Flow Data" form (fig. 4).

15.2 *Gravel Base Placement*:

15.2.1 Place the gravel base for the filter specimen using washed fine gravel, plus No. 4 (4.75-mm) sieve size to minus 3/8-inch (9.5-mm). Place the gravel base to a depth of approximately 1-3/16 inches (30 mm) in the bottom of the cylinder. Using a cylindrical tamper, *moderately* compact the gravel.

NOTE 2.–Forceful compaction can cause the gravel base material to bulk and displace adjacent to the point of compaction. If this occurs, decrease compactive effort until material ceases bulking and compacts tightly.

15.2.2 Place an additional 1-3/16 inches (30 mm) of gravel base in the cylinder, and moderately compact the gravel.

15.2.3 Place a circular-shaped No. 30 (600-μm) sieve size screen, with a diameter slightly smaller than the diameter of the cylinder, over the gravel base. Place a 1/2-inch (13-mm) diameter string of modeling clay around the perimeter of the cylinder on top of the screen. Press the clay against the cylinder wall and into the screen to make a seal.

NOTE 3.–The No. 30 (600-μm) sieve size screen prevents large quantities of the filter specimen from moving into the gravel base when the filter specimen is compacted. However, the screen should not act as a filter for the filter specimen. Plugging of the screen can produce inconsistent results.

15.2.4 Place the straightedge across the top cylinder segment flange, and measure the depth from the staightedge to the top of the wire screen at four places around the perimeter of the cylinder and one at the center. Record the values to the nearest 0.001 m [on line (1) of the form "Filter Test Configuration Data—Sheet 1" (fig. 3)] *Depth to top of compacted gravel base and screen, m: N, W, S, E,* and *C. Average depth to top of compacted gravel base and screen, m.*

15.2.5 Calculate and record to the nearest 0.001 m [on line (2) of the form] *Average depth to top of compacted gravel base and screen, m.*

7-2314 (9-85) Bureau of Reclamation	FILTER TEST CONFIGURATION DATA - SHEET 1	Designation USBR 5630 - 89

PROJECT	FEATURE
Example	Example

TESTED BY	DATE	COMPUTED BY	DATE	CHECKED BY	DATE

FILTER SPECIMEN PLACEMENT

Sample No. 61S-100 Classification SP

Test Cylinder System Acrylic Area 0.0670 (m^2)

(1) Depth to top of compacted gravel base and screen (m):

N W C E S — N = 0.288 W = 0.286 S = 0.285 E = 0.287 C = 0.287

(2) Average depth to top of compacted gravel base and screen (m) 0.287 (0.592)

(3) Mass of soil per compaction lift of filter specimen (lbm) 21.0

(4) Depth to top of each compacted lift of filter specimen (m):

Lift No.	Target lift thickness (m) (a)	Target depth to top of lift (m) (b)	Measured depth to top of lift (m) (c)	Average depth to top of lift (m) (d)
4-1	0.080	0.207 (0.512)	0.215,0.209,0.206	0.210 (0.515)
4-2	0.080	0.127 (0.432)	0.134,0.130,0.130	0.131 (0.436)
4-3	0.080	0.047 (0.352)	0.050,0.053,0.053	0.052 (0.357)
4-4	0.080	-0.033 (0.272)	0.278,0.269,0.278	0.275

NOTE - Acrylic tube added? ☒ Yes ☐ No (If yes, add 0.305 m to values in 4(b) and 4(d))

(5) Depth to top of compacted filter specimen (m)

N W C E S — N = 0.273 W = 0.270 S = 0.279 E = 0.276 C = 0.277

(6) Average depth to top of compacted filter specimen (m) 0.275

(7) Height of compacted filter specimen (m) 0.317

(8) Total wet mass of compacted filter specimen (lbm) 83.9

(9) Wet unit weight of compacted filter specimen (lbf/ft^3) 111.9

(10) Moisture content of compacted filter specimen (%) 0

(11) Dry unit weight of compacted filter specimen (lbf/ft^3) 111.9

(12) Comments Material compacted dry with moderate effort

GPO 848 - 365

Figure 3. - Filter test configuration data — sheet 1 — example.

7-2313 (9-85)
Bureau of Reclamation

FILTER TEST FLOW DATA SHEET

Designation USBR 5630 - 89

PROJECT: Example

FEATURE: Example

TESTED BY	DATE	COMPUTED BY	DATE	CHECKED BY	DATE

Base Material: Sample No. ———

Filter Material: Sample No. 61S-100

Type of base specimen: Gravel base

Comments:

Hydraulic head (ft): 0.5, 1.0, 2.0

Time (a)	Time increment (min) (b)	Total elapsed time (min) (c)	Flow increment (mL) (d)	Total flow (mL) (e)	Increment flow rate (mL/min) (f)	Elapsed flow rate (mL/min) (g)	Comments (h)
			0	0			
0830	10.0	10.0	20,700 / 20,700	20,700	2070	2070	Hydraulic Head
0840	10.0	20.0	19,950 / 19,950	40,650	1995	2033	= 0.5 ft.
0850	—	—	—	—	—	—	—
0855	5.0	5.0	21,460 / 21,460	21,460	4292	4292	Hydraulic Head
0900	5.0	10.0	20,980 / 20,980	42,440	4196	4244	= 1.0 ft.
0905	—	—	—	—	—	—	—
0915	1.0	1.0	8370	8370	8370	8370	Hydraulic Head
0916	1.0	2.0	8410	16,780	8410	8390	= 2.0 ft.
0917							

GPO 848-364

Figure 4. – Filter test flow data sheet — calibration example.

7-2315 (9-85) Bureau of Reclamation	FILTER TEST CONFIGURATION DATA - SHEET 2A (Compacted soil base)	Designation USBR 5630 - 89
PROJECT: Example	FEATURE: Example	

TESTED BY	DATE	COMPUTED BY	DATE	CHECKED BY	DATE

BASE SPECIMEN PLACEMENT

Sample No. 61S-200 Classification CL

Test Cylinder System Acrylic Area 0.0670 (m^2)

(13) Average depth to top of compacted filter specimen (m): 0.275

(14) Mass of soil per compaction lift of base specimen (lbm): 10.9

(15) Depth to top of each compacted lift of base specimen (m):

Lift No.	Target lift thickness (m) (a)	Target depth to top of lift (m) (b)	Measured depth to top of lift (m) (c)	Average depth to top of lift (m) (d)
15-1	0.040	0.235	0.240, 0.243, 0.231	0.238
15-2	0.040	0.195	0.203, 0.194, 0.200	0.199
15-3	0.040	0.155	0.160, 0.155, 0.156	0.157
15-4	0.040	0.115	0.120, 0.115, 0.119	0.118

(16) Depth to top of compacted base specimen (m):

N W C E S N = 0.120 W = 0.115 S = 0.116 E = 0.117 C = 0.117

(17) Average depth to top of compacted base specimen (m): 0.117

(18) Height of compacted base specimen (m): 0.158

(19) Total wet mass of compacted base specimen (lbm): 43.5

(20) Wet unit weight of compacted base specimen (lbf/ft^3): 116.4

(21) Moisture content of compacted base specimen (%): 16.5

(22) Dry unit weight of compacted base specimen (lbf/ft^3): 99.9

(23) Comments: Specimen compacted easily

GPO 848-366

Figure 5. - Filter test configuration data — sheet 2A (compacted soil base) — example.

7-2316 (9-85) Bureau of Reclamation	FILTER TEST CONFIGURATION DATA - SHEET 2B (Soil Slurry Base)	Designation USBR 5630 - 89
PROJECT: Example	FEATURE: Example	

TESTED BY	DATE	COMPUTED BY	DATE	CHECKED BY	DATE

BASE SPECIMEN PLACEMENT

Sample No. 61S-200 Classification CL

Test cylinder system Acrylic Area 0.0670 (m^2)

(13) Slurry moisture content (%) 112

(14) Slurry unit weight (lbf/ft^3) 88.4

(15) Slurry Marsh funnel viscosity (s) 52

(16) Depth to top of slurry base (m):

N W C E S N = 0.118 W = 0.118 S = 0.117 E = 0.117 C = 0.117

(17) Average depth to top of slurry base specimen (m) 0.117

(18) Comments Slurry did not appear to hold sand in suspension; required 17 minutes to place slurry, seal test specimen, and begin flow testing.

GPO 848-367

Figure 6. - Filter test configuration data — sheet 2B (soil slurry base) — example.

$$H_a = \frac{N + W + S + E + C}{5} \quad (1)$$

where:

H_a = average depth to top of compacted gravel base and screen, m

N, W, S, E, C = depth to the top of the compacted gravel base and screen (locations N, W, S, E, and C), m

15.3 *Filter Specimen Placement*:

15.3.1 *Soil Filter Specimen Placement*:

15.3.1.1 The mass of soil required for each lift of filter specimen was predetermined (refer to subpar. X2.2.3.8). Record the value to the nearest 0.1 lbm on line (3) of the form (fig. 3) *Mass of soil per compaction lift of filter specimen, lbm.*

15.3.1.2 Calculate the required depth from the top of the cylinder flange to the top of each lift; record the values to the nearest 0.001 m [on lines 4-1 through 4-4, col. (b) of the form] *Target depth to top of lift, m.*

$$H_1 = H_a - L \quad (2)$$

where:

H_1 = target depth to top of lift, m

H_a = average depth to top of compacted gravel base and screen, m

L = target lift thickness, m

15.3.1.3 Uniformly place and evenly distribute the mass of soil for each lift of the filter specimen in the cylinder on top of the gravel base and screen or preceding lift.

NOTE 4.–Well-graded filter material containing minus 3-inch (75-mm) gravel-size particles will segregate if dumped into the cylinder and will not produce a uniform specimen. To avoid segregation, place the larger pieces of gravel [3/4- to 3-inch (19.0- to 75-mm) size] by hand; place the remaining material onto and around the hand-placed particles, filling the voids.

15.3.1.4 Compact each lift of the filter specimen by hand using a large diameter tamper. Apply moderate effort, and distribute the compaction blows over the entire surface of the lift until a compact soil matrix is obtained.

NOTE 5.–Forceful compaction can cause the filter material to bulk and displace material adjacent to the point of impact. Note the occurence of this condition in the space provided for *Comments*. If the material bulks, it may not be possible to obtain the desired placement unit weight (wet or dry). Determine the actual lift thickness. A difference of about 3/16 inch (5 mm) from target lift thickness affects placement unit weight approximately 5 percent greater or less than desired placement unit weight. The engineer responsible for the testing program shall be contacted and will determine if the deviation from the desired placement unit weight is acceptable.

15.3.1.5 Place a 1/2-inch (13-mm) diameter string of modeling clay around the perimeter of the cylinder on the surface of the compacted lift. Press the clay against the cylinder wall and into the filter material to make a seal.

15.3.1.6 Measure the depth from the top of the cylinder flange to the surface of each compacted filter specimen lift, in at least three places in the cylinder — using the straightedge and rule — record the values to the nearest 0.001 m [on line (4-1), col. (c) of the form] *Measured depth to top of lift, m.*

NOTE 6.–Because of the uneven surfaces that can occur with coarse-grained filters containing gravel, an approximate depth may be appropriate to describe the irregular surface.

15.3.1.7 Calculate an average of the depth values recorded in subparagraph 15.3.1.6, and record the value to the nearest 0.001 m [on line (4-1), col. (d) of the form] *Average depth to top of lift, m.*

15.3.1.8 Repeat subparagraphs 15.3.1.3 through 15.3.1.7 for the remaining lifts of the filter specimen. Compact the last lift of the filter specimen, and measure the depth from the top of the cylinder flange to the surface of the compacted filter specimen at four points on the perimeter and one point in the center of the surface. Record the values to the nearest 0.001 m [on line (5), of the form] *Depth to top of compacted filter specimen, m: N, W, S, E,* and *C.*

NOTE 7.–If the last compacted lift of the filter specimen will clearly exceed the height of the cylinder flange of the acrylic cylinder system (refer to subpar. 8.2.1.1), attach a 12-inch (305-mm) high acrylic cylinder segment to the cylinder system. Seal the cylinder flanges with water-resistant grease and fasten the cylinders together with bolts (refer to procedures in subpars. 12.3.1.2, 12.3.1.3, and 12.3.1.5). Add 0.305 m to all depth measurements performed in subparagraphs 12.9, 12.10, 15.3.1.2, and 15.3.1.7. Note on the data form that the 12-inch (305-mm) high cylinder segment was added.

If the last compacted lift of the filter specimen is less than the height of the cylinder flange, place additional filter material on top of the compacted filter specimen and compact it. Repeat this process until the top of the compacted filter specimen is level with the surface of the cylinder flange.

If the last compacted lift of the filter specimen is level with the height of the cylinder flange, proceed to the next step.

15.3.1.9 Calculate and record to the nearest 0.001 m [on line (6) of the form] *Average depth to top of compacted filter specimen, m.*

$$H_b = \frac{N + W + S + E + C}{5} \quad (3)$$

where:

H_b = average depth to top of compacted filter specimen, m

N, W, S, E, C = depth to the top of the compacted filter specimen (locations N, W, S, E, and C), m

15.3.1.10 Calculate and record to the nearest 0.001 m [on line (7) of the form] *Average height of compacted filter specimen, m.*

$$H_c = H_a - H_b \quad (4)$$

where H_c equals average height of compacted filter specimen, m.

15.3.1.11 The total wet mass of filter specimen placed was predetermined (refer to subpar. X2.2.3.6). Record the value to the nearest 0.1 lbm [on line (8) of the form] *Total wet mass of compacted filter specimen, lbm.*

15.3.1.12 Calculate and record to the nearest 0.1 lbf/ft³ [on line (9) of the form] *Wet unit weight of compacted filter specimen, lb/ft³.*

$$\gamma_{wet} = \frac{2.832 \times 10^{-2} \, (1) \, m_t}{A \, H_c} \qquad (5)$$

where:

γ_{wet} = wet unit weight of compacted filter specimen, lbf/ft³
m_t = total wet mass of filter specimen, lbm
A = area of the cylinder test system, m² [A was predetermined (refer to subpar. X2.2.3)]
H_c = average height of compacted filter specimen, m
2.832×10^{-2} = convert from m³ to ft³
1 = convert from lbm to lbf

15.3.1.13 The moisture content of the filter material was predetermined (refer to subpar. X.2.2.3.1). Record the value [on line (10) of the form] *Moisture content of compacted filter material, %.*

15.3.1.14 Calculate and record to the nearest 0.1 lbf/ft³ [on line (11) of the form] *Dry unit weight of compacted filter specimen, lbf/ft³.*

$$\gamma_d = \frac{\gamma_{wet}}{1 + \frac{w}{100}} \qquad (6)$$

where:

γ_d = dry unit weight of compacted filter specimen, lbf/ft³
w = moisture content of filter specimen, %
100 = convert from percent to decimal

15.3.1.15 If the filter specimen height was less than or equal to the height of the cylinder flange (see note 7), attach a 12-inch (305-mm) high acrylic cylinder segment to the cylinder system. Seal the cylinder flanges with water-resistant grease; fasten the cylinders together with bolts. (Refer to procedures in subpars. 12.3.1.2, 12.3.1.3, and 12.3.1.5 and proceed to subpar. 15.4.)

15.3.2 *Geotextile Filter Placement*:

15.3.2.1 Assemble the acrylic filter test cylinder system in accordance with subparagraphs 12.2 and 12.3.

15.3.2.2 Place a layer of washed fine gravel plus No. 4 (4.75 mm) sieve size to minus 3/8 inch (9.5 mm) on the bottom of the assembled cylinder to a depth of 3-1/8 inches (80 mm). Moderately compact the gravel using a cylindrical tamper. (See note 2, subpar. 15.2.1 concerning moderate compaction.)

15.3.2.3 Place a 1/2-inch (13-mm) diameter string of modeling clay around the perimeter of the cylinder on the surface of the gravel layer. Press the clay against the cylinder wall and into the gravel to make a seal.

15.3.2.4 Repeat subparagraphs 15.3.2.2 and 15.3.2.3 until the surface of the compacted gravel layer is level with the top flange of the cylinder segment.

15.3.2.5 Spread a small amount of water-resistant sealing grease on the top surface of the cylinder flange.

15.3.2.6 Place the geotextile filter over the gravel and cylinder flange; spread the membrane and remove any wrinkles. The geotextile fabric should have a diameter of at least 15 inches (380 mm).

15.3.2.7 Spread a small amount of water-resistant sealing grease on the bottom flange of the 12-inch (305-mm) high acrylic cylinder segment. Place the cylinder segment on top of the membrane. Align the cylinder flange holes and perforate the membrane at the flange hole locations.

15.3.2.8 Fasten the cylinder segments with bolts as described in subparagraph 12.2.1.5.

15.4 *Filter Specimen Flow Calibration*:

NOTE 8.–The filter specimen flow calibration provides data about the flow rate which can be achieved through the test equipment and the compacted filter specimen or the geotextile filter. The data are helpful in evaluating results of the filter test.

15.4.1 All flow calibration data *Comments* are recorded on the "Filter Test Flow Data" form as shown on figure 4.

15.4.2 Attach the de-aired water supply source to the out-flow plumbing system.

15.4.3 Open the stopcock and shutoff valves in the outflow system plumbing.

15.4.4 Open the valve to the de-aired water source, and begin to fill the outflow plumbing and filter test cylinder system under low hydraulic head [0.5-foot (150-mm) head maximum].

15.4.5 Close the stopcock valve when all air is flushed from the plumbing system and only water emerges from the stopcock valve.

15.4.6 Continue filling the filter test cylinder system under low hydraulic head until water covers the surface of the filter specimen to a depth of about 2 inches (50 mm).

15.4.7 Carefully fill the cylinder to the top using tap-water (avoid disturbing the surface of the filter specimen).

15.4.8 Fasten the top plate to the cylinder using procedures described in subparagraphs 12.3.1.2, 12.3.1.3, and 12.3.1.5.

15.4.9 Open the stopcock and shutoff valves on the inflow system plumbing. Continue to fill the cylinder by adding water through the outflow system plumbing until all air is flushed from the filter test cylinder system and only water emerges from the valves in the inflow system plumbing. Close the inflow system stopcock and outflow system shutoff valve.

NOTE 9.–The stopcock valve may be located in the inflow system plumbing or on the top plate of the cylinder system.

15.4.10 Connect the flexible tubing from the constant head water supply system to the inflow system plumbing.

15.4.11 Flush water through the inflow system to the shutoff valve until only water emerges from that valve. Close the shutoff valve.

15.4.12 Set the outflow system tailwater about 2 inches (50 mm) higher than the top of the cylinder.

15.4.13 Raise the adjustable constant head water supply tank until the water surface elevation of the supply tank is 6 inches (150 mm) above the tailwater elevation. Record the difference in elevation on the "Filter Test Flow Data" form *Hydraulic head, ft.*

15.4.14 Open the outflow system shutoff valve, and allow water to percolate through the cylinder system for several minutes until the flow stabilizes.

15.4.15 Watch the water surface elevation in the constant head water supply tank. If the water surface elevation decreases to below the level of the overflow tube, close the outflow system shutoff valve. Repeat the flow calibration procedure beginning with subparagraph 15.4.11. Reduce the hydraulic head (difference in headwater and tailwater elevations) specified in subparagraph 15.4.13 by a factor of 2 and continue with subparagraph 15.4.14.

NOTE 10.–If the water surface elevation in the constant head water supply tank still does not remain stable, record the information on the data form in column (h) *Comments.*

15.4.16 Watch the clear plastic water supply tubing for air bubbles. If air is found, close the outflow system shutoff valve. Repeat the flow calibration procedure beginning with subparagraph 15.4.11.

15.4.17 Begin collecting effluent from the outflow system in a suitably sized container. Record the test starting time (use military time) in column (a) *Time* of the form.

NOTE 11.–The volume of flow through the cylinder system will vary as a function of the permeability of the filter specimen. Therefore, judgment should be used in selecting the size of containers to be used for collecting the effluent.

15.4.18 Collect effluent for a convenient time interval ranging from 1 to 10 minutes. Remove the container with effluent and replace it with an empty container. Record to the nearest 0.1 minute the time when the containers were changed in column (a) *Time* of the form.

15.4.19 Calculate and record to the nearest 0.1 minute [in col. (b) of the form] *Time increment, min.*

$$T = T_e - T_b \tag{7}$$

where:

T = time increment, hour and minute
T_e = time at end of collection interval, h and min
T_b = time at beginning of collection interval, h and min

15.4.20 Determine the volume of effluent (mL) collected during the time increment.

15.4.20.1 The volume of small flows can be measured directly using graduated cylinders. Determine the volume of effluent (mL) collected during the time increment and record to the nearest 1.0 mL [in col. (d) of the form] *Flow increment, mL.*

15.4.20.2 Large volumes can be collected in buckets and measured directly in graduated cylinders as in subparagraph 15.4.20.1, or the mass can be measured and the volume calculated. Determine the mass of effluent (kg) collected in the bucket. Draw a diagonal line in column (d) on the form, and record the *Flow increment, g* value to the nearest 0.1 lbm in the space above the diagonal line. Convert the mass of water to a volume.

$$V_w = \frac{m_w}{\rho_w} \tag{8}$$

where:

V_w = volume of water, mL
ρ_w = density of water equal to 1.0 g/mL
m_w = mass of water, g

Record the *Flow increment, mL* value to the nearest 10.0 mL in col. (d) below the diagonal line.

NOTE 12.–The influence of temperature on the density of water, for the ranges normally encountered in the laboratory (15 to 25 °C), results in a change in calculated volume of less than 0.21 percent. Therefore, a density of 1.0 g/mL is sufficiently accurate to convert the mass of water to volume.

15.4.21 Calculate and record to the nearest 0.1 min [in col. (c) of the form] *Total elapsed time, min.*

$$T_c = T_{cp} + T \tag{9}$$

where:

T_c = total elapsed time, min
T_{cp} = total elapsed time of previous time increment, min
T = time increment, min

15.4.22 Calculate and record to the nearest 0.1 min [in col. (e) of the form] *Total flow, mL.*

$$V_t = V_{tp} + V_i \tag{10}$$

where:

V_t = total flow, mL
V_{tp} = total flow from previous time increment, mL
V_i = flow increment, mL

15.4.23 Calculate and record to the nearest 1.0 mL/min [in col. (f) of the form] *Increment flow rate, mL/min.*

$$Q_i = \frac{V_i}{T} \tag{11}$$

where Q_i equals increment flow rate, mL/min.

15.4.24 Calculate and record to the nearest 1.0 mL/min [in col. (g) of the form] *Elapsed flow rate mL/min.*

$$Q_e = \frac{V_t}{T_c} \tag{12}$$

where Q_e equals elapsed flow rate, mL/min.

15.4.25 Repeat the procedures in subparagraph 15.4.18 through 15.4.24 for at least two time increments at each hydraulic head at which the filter will be tested.

NOTE 13.–It is possible to "blow" the fines (minus No. 200 sieve size material) out of the filter specimen during the calibration testing. If the effluent appears cloudy or there is visible evidence that the filter specimen is being cleaned by the calibration, discontinue the calibration testing.

15.4.26 Close the inflow system shutoff.

15.4.27 Lower the constant head water supply tank to the same height as the outflow system tailwater, disconnect the constant head water supply tank from the inflow system plumbing.

15.4.28 Open the stopcock valve on the inflow system plumbing.

15.4.29 Drain the cylinder by gradually lowering the outflow system tailwater until the cylinder system is drained to the gravel base.

15.4.30 Remove the cylinder top plate from the cylinder system.

15.5 *Base Specimen Placement*:

15.5.1 *Compacted Soil Base Specimen*:

15.5.1.1 All data are to be recorded on the "Filter Test Configuration Data—Sheet 2A (Compacted Soil Base)" form as shown on figure 5.

15.5.1.2 The average depth to the top of the compacted filter specimen was previously determined (refer to subpar. 15.3.1.7). Record [on line (13) of the form] *Average depth to top of compacted filter specimen, m* (fig. 5—sheet 2A).

15.5.1.3 The mass of soil required for each lift of base specimen was previously determined (refer to subpar. X2.2.3.8). Record [on line (14) of the form] *Mass of soil per compaction lift of base specimen, lbm.*

15.5.1.4 The target thickness of the base specimen lifts was predetermined (refer to subpar. X1.2.2). Record the lift thickness [on lines (15-1) through (15-4) in column (a) of the form] *Target lift thickness, m.*

15.5.1.5 Calculate and record to the nearest 0.001 m [on lines (15-1) through (15-4) in col. (b) of the form] *Target depth to top of lift, m.*

$$H_1 = H_b - L \qquad (13)$$

where:

H_1 = target depth to top of lift, m
H_b = average depth to top of compacted filter specimen, m
L = individual lift thickness, m

15.5.1.6 The base specimen may be either compacted on top of the soil filter specimen, or compacted in a cylinder segment on a hard surface and then placed on top of the cylinder segment containing the soil filter specimen. Compacting the base specimen on top of the filter specimen may cause the filter specimen to compact to a unit weight greater than desired for the test. The base specimen for use with a geotextile filter material should be compacted in a cylinder segment on a hard surface and then placed on top of the cylinder containing the geotextile filter specimen.

15.5.1.7 Place and uniformly distribute the soil mass for each lift of the base specimen on top of the filter specimen or on a hard surface. Compact each lift of the base specimen by hand using a large diameter tamper. Apply moderate effort and distribute the compaction blows over the entire surface of each lift.

15.5.1.8 Measure the depth from the top of the cylinder flange to the surface of each compacted base specimen lift, in at least three places—using the straightedge and rule—record the values to the nearest 0.001 m [on line (15-1), col. (c) of the form] *Measured depth to top of lift, m.*

15.5.1.9 Calculate an average of the values recorded in subparagraph 15.5.1.8; record the depth to the nearest 0.001 m [on line (15-1), col. (d) of the form] *Average depth to top of lift, m.*

15.5.1.10 Scarify and roughen the surface of each compacted base lift with a knife.

15.5.1.11 Repeat subparagraphs 15.5.1.7 through 15.5.1.10 for the remaining lifts of the base specimen. After the last lift is compacted, measure the depth from the top of the cylinder flange to the surface of the compacted base specimen at four points on the perimeter and one point in the center of the surface. Record to the nearest 0.001 m [on line (16) of the form] *Depth to top of compacted base specimen, m; N, W, S, E,* and *C.*

15.5.1.12 Calculate and record to the nearest 0.001 m [on line (17) of the form] *Average depth to top of compacted base specimen, m.*

$$H_d = \frac{N + W + S + E + C}{5} \qquad (14)$$

where H_d equals average depth to top of compacted base specimen, m.

15.5.1.13 Calculate and record to the nearest 0.001 m [on line (18) of the form] *Average height of compacted base specimen, m.*

$$H_e = H_b - H_d \qquad (15)$$

where:

H_e = average height (thickness) of compacted base specimen, m
H_b = average depth to top of compacted filter specimen, m
H_d = average depth to top of compacted base specimen, m

15.5.1.14 The total wet mass of base specimen placed was predetermined (refer to subpar. X2.2.3.6). Record the value [on line (19) of the form] *Total wet mass of compacted base specimen, lbm.*

15.5.1.15 Calculate and record to the nearest 0.1 lbf/ft³ [on line (20) of the form] *Wet unit weight of compacted base specimen, lbf/ft³.*

$$\gamma_{wet} = \frac{2.832 \times 10^{-2}\,(1)\,m_t}{A\,H_e} \qquad (16)$$

where:

γ_{wet} = wet unit weight of compacted base specimen, lbf/ft³

m_t = total wet mass of base specimen, lbm
A = area of the cylinder test system, m^2 [A was predetermined (refer to subpara. X2.2.3).]
2.832×10^{-2} = convert from m^3 to ft^3
1 = convert from lbm to lbf

15.5.1.16 The moisture content of the base material was predetermined (refer to subpar. X2.2.3.1). Record the value [on line (21) of the form] *Moisture content of compacted base specimen, %.*

15.5.1.17 Calculate and record to the nearest 0.1 lbf/ft^3 [on line (22) of the form] *Dry unit weight of compacted base specimen, lbf/ft^3.*

$$\gamma_d = \frac{\gamma_{wet}}{1 + \frac{w}{100}} \qquad (17)$$

where:
γ_d = dry unit weight of compacted base specimen, lbf/ft^3
w = moisture content of the compacted base specimen, %
100 = convert from percent to decimal

15.5.1.18 If the base material is cohesive, perforate the compacted base specimen with five 1/2-inch (13-mm) diameter holes as prescribed in the following subparagraphs.

15.5.1.18.1 *Base Specimen Compacted on Top of Soil Filter.*–Drill five 1/2-inch (13-mm) diameter holes through the base specimen using an electric twist drill. The holes should extend into the filter specimen about 1/4 to 1/2 inch (6 to 13 mm). Roughen the sides of the holes using a burette cleaner bristle brush.

NOTE 14.–It is not practical and/or possible to drill holes through some coarse-grained or cohesionless materials. If holes are not drilled, record this as *Comments* on the form.

15.5.1.18.2 *Base Specimen Compacted on Top of Geotextile Filter.*–Drill five 1/2-inch (13-mm) diameter holes into the base specimen using an electric twist drill. The holes should penetrate the base to within 1/4 to 1/8 inch (6 to 3 mm) of the base and geotextile interface and should be drilled with extreme care to avoid puncturing the geotextile filter. Roughen the sides of the holes using a burette cleaner bristle brush.

15.5.1.18.3 *Base Specimen Compacted on a Hard Surface.*–Drill five 1/2-inch (13-mm) diameter holes through the specimen as described in subparagraph 15.5.1.18.1. Spread a small amount of waterproof grease on the bottom flange of the test cylinder segment containing the base specimen. Place the cylinder segment on top of the cylinder segment containing either the compacted filter specimen or geotextile membrane. Align the flange bolt holes. Perforate the membrane through the flange bolt holes (geotextile membrane only). Fasten the cylinder segments with bolts as described in subparagraph 12.3.1.5.

Roughen the sides of the hole using a burette cleaner bristle brush.

15.5.1.19 Record observations made during the base specimen placement as *Comments* on the form.

15.5.1.20 Place a No. 4 standard sieve size screen, with a diameter slightly smaller than the test cylinder, on the top of the compacted base specimen.

15.5.1.21 Place a layer of fine gravel [plus No. 4 (4.75 mm) sieve size to minus 3/4-inch (19.0 mm) size] over the screen to within 1/4 inch (6 mm) of the top of the cylinder flange and proceed to paragraph 15.6.

15.5.2 *Slurry Base Specimen*:

15.5.2.1 All data are to be recorded on the "Filter Test Configuration Data—Sheet 2B" (soil slurry base) as shown on figure 6.

15.5.2.2 The slurry moisture content, unit weight, and Marsh funnel viscosity were previously determined (refer to subpar. X2.2.4.12 through X2.2.4.14). Record the values on line (13) of the form *Slurry moisture content, %*; on line (14) *Slurry unit weight, lbf/ft^3*; and on line (15) *Slurry Marsh funnel viscosity, s.*

15.5.2.3 Thoroughly mix the slurry in buckets (prepared in accordance with subpar. X2.2.4). Carefully pour the slurry base onto the top of the filter specimen from a height of 1 to 2 inches (25 to 50 mm) above the filter specimen surface to prevent erosion or disturbance of the filter specimen surface. Fill the cylinder with the remaining slurry.

15.5.2.4 Measure the depth from the top of the cylinder flange to the surface of the slurry base specimen at four points on the perimeter and one point in the center of the surface. Record the values to the nearest 0.001 m [on line (16) of the form] *Depth to top of slurry base, m; N, W, S, E,* and *C.*

15.5.2.5 Calculate and record [on line (17) of the form] *Average depth to top of slurry base specimen, m.*

$$H_f = \frac{N + W + S + E + C}{5} \qquad (18)$$

where H_f equals average depth to top of slurry base specimen, m.

15.5.2.6 Record any comments regarding the placing of slurry base specimen [on line (18) of the form] as *Comments.*

15.6 *Test Cylinder Saturation*:

15.6.1 *Compacted Base Specimen*:

15.6.1.1 Infiltrate the base and filter specimens with water using the procedures described in subparagraphs 15.4.2 through 15.4.7, until the entire filter test specimen is thoroughly wetted.

15.6.1.2 Fasten the cylinder top plate, flush the cylinder and inflow system plumbing, as described in subparagraphs 15.4.8 through 15.4.12, and proceed to paragraph 15.7.

15.6.2 *Slurry Base Specimen*:

15.6.2.1 Carefully fill the cylinder to the top flange with water as quickly as possible. Avoid disrupting or diluting the slurry, if possible.

15.6.2.2 Fasten the cylinder top plate, flush the test cylinder and inflow system plumbing as described in subparagraphs 15.4.8 through 15.4.12.

15.7 *Filter Testing*:

15.7.1 All flow test data and comments are recorded on the "Filter Test Flow Data" form shown on figures 7, 9, and 11.

15.7.2 Record on the form *Hydraulic head, ft* under which the test is to be performed.

15.7.3 Start the test by opening the outflow system shutoff valve; record [in col. (a) of the form] *Time*.

NOTE 15.–The volume of flow through the cylinder system will vary as a function of the permeability of the base specimen. Therefore, judgment should be used in selecting the size of containers to be used for collecting the effluent.

15.7.4 Approximately 1 minute after the test has begun, remove the container of effluent and replace it with an empty container.

15.7.5 Record [in col. (a) of the form] *Time* when the containers were changed.

15.7.6 Calculate the time increment, measure the flow volume, and calculate flow rates according to subparagraphs 15.4.19 through 15.4.25.

15.7.7 Comment on the clarity and color of the effluent using the following descriptors:

Clarity . . . Clear, slightly cloudy, or cloudy

Color . . . Brown, red, yellow, etc.

Record [in col. (h) of the form] any unusual behavior observed during the test increment, e.g., air lock developed in supply tube, water observed leaking from flange connections, etc., as *Comments*.

15.7.8 Plot the values of incremental flow rate as a function of total elapsed time on the "Soil Filter Test" form (increment flow rate versus total elapsed time summary plot) as shown on figures 8, 10, and 12.

NOTE 16.–During the initial time increments of the test, it may not be feasible to perform all of the calculations specified in subparagraphs 15.4.21 through 15.4.25 within the specified time increment. If there is not sufficient time within the current time increment, continue with the next step of the procedure. Perform the calculations specified in subparagraphs 15.4.21 through 15.4.25 as soon as possible.

15.7.9 Continue collecting the effluent from the cylinder system and recording values of time increment and effluent volume in accordance with subparagraphs 15.4.17 through 15.4.25, observing the clarity and color of effluent in accordance with subparagraph 15.7.7, and plotting the test data in accordance with subparagraph 15.7.8.

15.7.10 Increase the time increment specified in subparagraph 15.7.4 to 2, 4, 10, 20, and 60 minutes for subsequent flow measurements.

15.7.11 Review the increment flow rate versus total elapsed time data plotted as shown on figure 8. If the data show that a reasonably straight horizontal line has been obtained—indicating constant flow rates—the next hydraulic head may be applied to the specimen (refer to subpar. 15.4.13), and subparagraphs 15.7.4 through 15.7.11 repeated. If test data are erratic and/or continue to define a sloping line, continue collecting effluent according to the procedure specified in subparagraphs 15.7.4 through 15.7.9 using a time increment of 60 minutes.

NOTE 17.–The filter test should run continuously for 24 hours per day. The flow rate through the system should be recorded if possible. The size of container required to collect system effluent for a 16-hour period (overnight) can be estimated from the current increment flow rate, Q_i. For some filter tests the increment flow rate may be very high; consequently, it may be impractical to collect the effluent overnight. In that case, begin collecting effluent the following day using a time increment of 60 minutes (refer to subpar. 15.7.4 through 15.7.9). Record this information [in col. (h) on the form] as *Comments* (fig. 7).

15.7.12 Repeat subparagraphs 15.7.2 through 15.7.11 for each hydraulic head under which the specimen is to be tested.

15.8 *Filter Test Specimen Takedown*:

15.8.1 Reduce the hydraulic head on the cylinder and drain the base and filter specimens in accordance with subparagraphs 15.4.27 through 15.4.29.

NOTE 18.–It may not be possible to drain the water from a slurry base specimen.

15.8.2 Disconnect the inflow system supply tubing from the top cover plate; disconnect and remove the top cover plate from the cylinder system.

15.8.3 Remove the layer of fine gravel and the No. 4 (4.75-mm) sieve size screen (compacted base specimen only).

15.8.4 Photograph the surface of the base specimen, and record any observations concerning the physical appearance of the surface such as cracking, degradation of the drilled holes, etc.

15.8.5 Carefully excavate the base specimen using scoops. Place the excavated material into a pan or bucket. While excavating the base specimen, record any observations regarding the consistency and appearance of the base material.

NOTE 19.–Carefully remove the base material from the interface between the base and filter specimens; avoid disturbing the interface.

15.8.6 Carefully clean the base material from the base-filter interface. Photograph the surface of the interface, and record any comments about the physical appearance of the interface.

15.8.7 Carefully excavate the filter specimen in 1- to 3-inch (25- to 75-mm) thick layers using a scoop. Place each layer in a separate pan. Record any comments about the physical appearance of the filter specimen.

15.8.8 Remove and wash the wire screen and gravel base from the bottom of the test cylinder system.

15.9 Plot the values of elapsed flow rate for the final time increment versus hydraulic head for each hydraulic head as shown on the "Soil Filter Test" flow data summary (fig. 13).

15.10 Plot the values of total flow versus total elapsed time for all time increments for each hydraulic head as shown on the "Soil Filter Test" flow data summary (fig. 14).

16. Calculations

16.1 All required calculations are included in the procedure.

17. Report

17.1 The report is to consist of the following completed and checked forms:

"Filter Test Specimen and Test Equipment" (fig. X1.1).
"Mass of Soil Required for Filter Test Specimens (Compacted base and filter specimens)" (figs. X2.1 and/or X2.2).
"Filter Test Configuration Data — Sheet 1" (fig. 3).
"Filter Test Flow Data" (fig. 4).
"Soil Filter Test" (increment flow rate versus total elapsed time summary plot) (fig. 8).
"Soil Filter Test" flow data summary plot (fig. 13).
"Soil Filter Test" flow data summary plot (fig. 14).
"Filter Test Configuration Data — Sheet 2A" (compacted soil base) (fig. 5).
"Filter Test Configuration Data — Sheet 2B" (soil slurry base) (fig. 6).

17.2 All calculations are to show a checkmark and all plotting must be checked.

18. References

[1] *Concrete Manual*, 8th ed. rev. reprint, Water and Power Resources Service [Bureau of Reclamation], Washington, D.C., (appendix — test designation 21), 1981.

[2] *Significance of Tests and Properties of Concrete and Concrete Making Materials*, ASTM Special Technical Publication 169B, 1978.

[3] *Concrete Manual*, 8th ed. rev. reprint, Water and Power Resources Service [Bureau of Reclamation], Washington, D.C., (appendix — test designation 19) 1981.

7-2313 (9-85) Bureau of Reclamation	FILTER TEST FLOW DATA SHEET	Designation USBR 5630 · 89

PROJECT		FEATURE			
Example		Example			
TESTED BY	DATE	COMPUTED BY	DATE	CHECKED BY	DATE

Base Material: Sample No. 61S-200 — Filter Material: Sample No. 61S-100

Type of base specimen Compacted — Comments

Hydraulic head (ft) 0.5 ft.

Time (a)	Time increment (min) (b)	Total elapsed time (min) (c)	Flow increment (mL) (d)	Total flow (mL) (e)	Increment flow rate (mL/min) (f)	Elapsed flow rate (mL/min) (g)	Comments (h)
0730			0	0			
0731	1.0	1.0	45	45	45	45	Effluent slightly cloudy
0732	1.0	2.0	22	67	22	34	" "
0734	2.0	4.0	26	93	13	23	Effluent clear
0738	4.0	8.0	33	126	8.3	16	" "
0748	10.0	18.0	78	204	7.8	11	" "
0808	20.0	38.0	148	352	7.4	9.3	" "
0908	60.0	98.0	450	802	7.5	8.2	" "
1008	60.0	158.0	460	1262	7.7	8.0	" "
1108	60.0	218.0	453	1715	7.6	7.9	" "
1208	60.0	278.0	457	2172	7.6	7.8	" "

GPO 848-364

Figure 7. – Filter test flow data sheet — 0.5 ft head example.

7-2317 (12-85)
Bureau of Reclamation

Designation USBR 5630 - 89

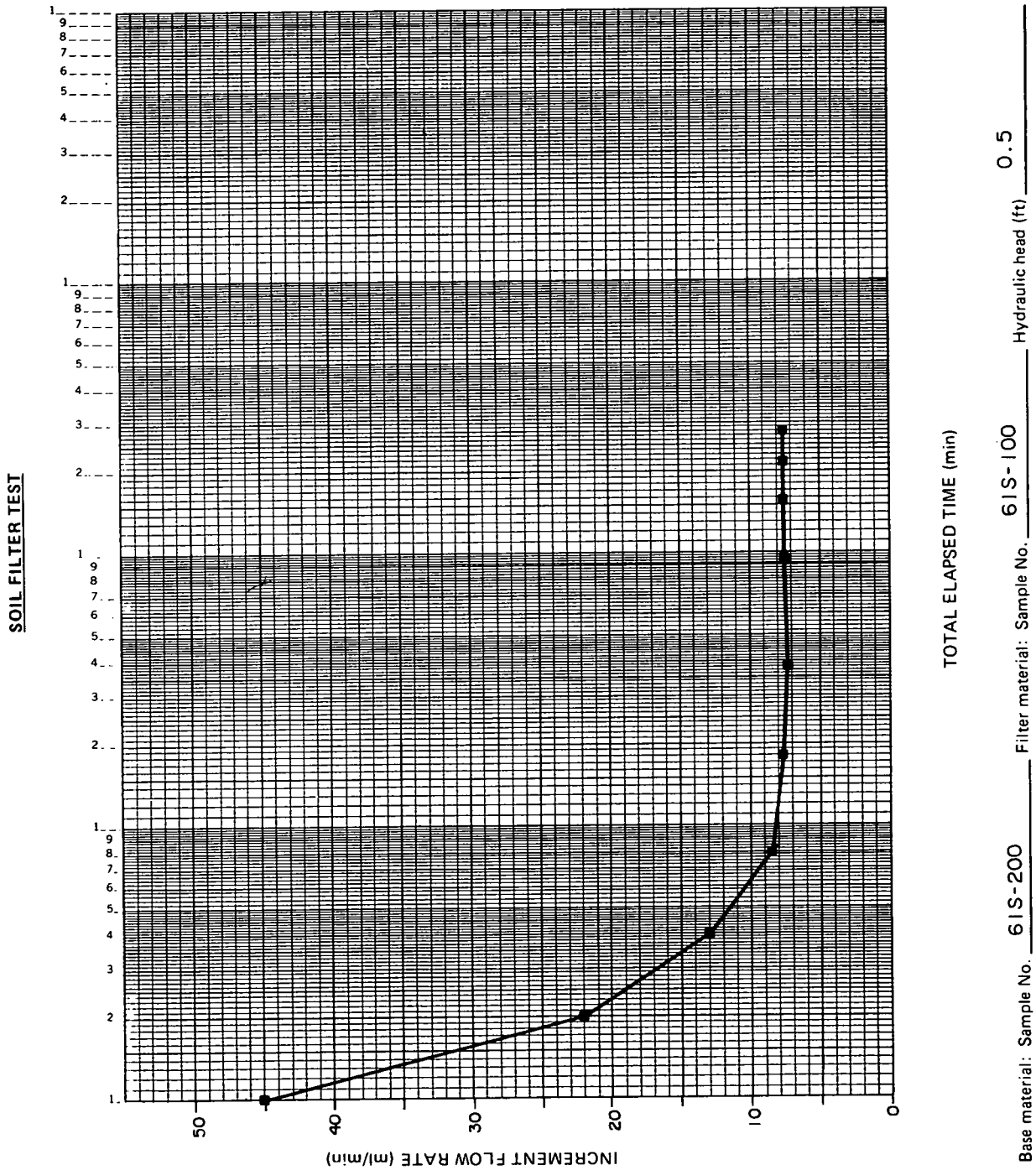

Figure 8. – Soil filter test — increment flow rate versus total elapsed time summary plot — 0.5 ft head example.

GPO 849 - 478

7-2313 (9-85) Bureau of Reclamation

FILTER TEST FLOW DATA SHEET

Designation USBR 5630 - 89__

PROJECT		FEATURE	
Example		Example	
TESTED BY	**DATE**	**COMPUTED BY**	**DATE**

CHECKED BY	DATE

Base Material: Sample No. 61S-200

Filter Material: Sample No. 61S-100

Type of base specimen Compacted

Comments

Hydraulic head (ft) 1.0 ft.

Time (a)	Time increment (min) (b)	Total elapsed time (min) (c)	Flow increment (mL) (d)	Total flow (mL) (e)	Increment flow rate (mL/min) (f)	Elapsed flow rate (mL/min) (g)	Comments (h)
1310			0	0			
1311	1.0	1.0	15	15	15	15	Effluent clear
1312	1.0	2.0	17	32	17	16	" "
1314	2.0	4.0	38	70	19	18	" "
1324	10.0	14.0	180	250	18	18	" "
1344	20.0	34.0	296	546	15	16	" "
1444	60.0	94.0	840	1386	14	15	" "
1544	60.0	154.0	850	2236	14	15	" "
1644	60.0	214.0	843	3079	14	14	" "

GPO 848-364

Figure 9. - Filter test flow data sheet — 1.0 ft head example.

7-2317 (12-85)
Bureau of Reclamation

Designation USBR 5630 - 89

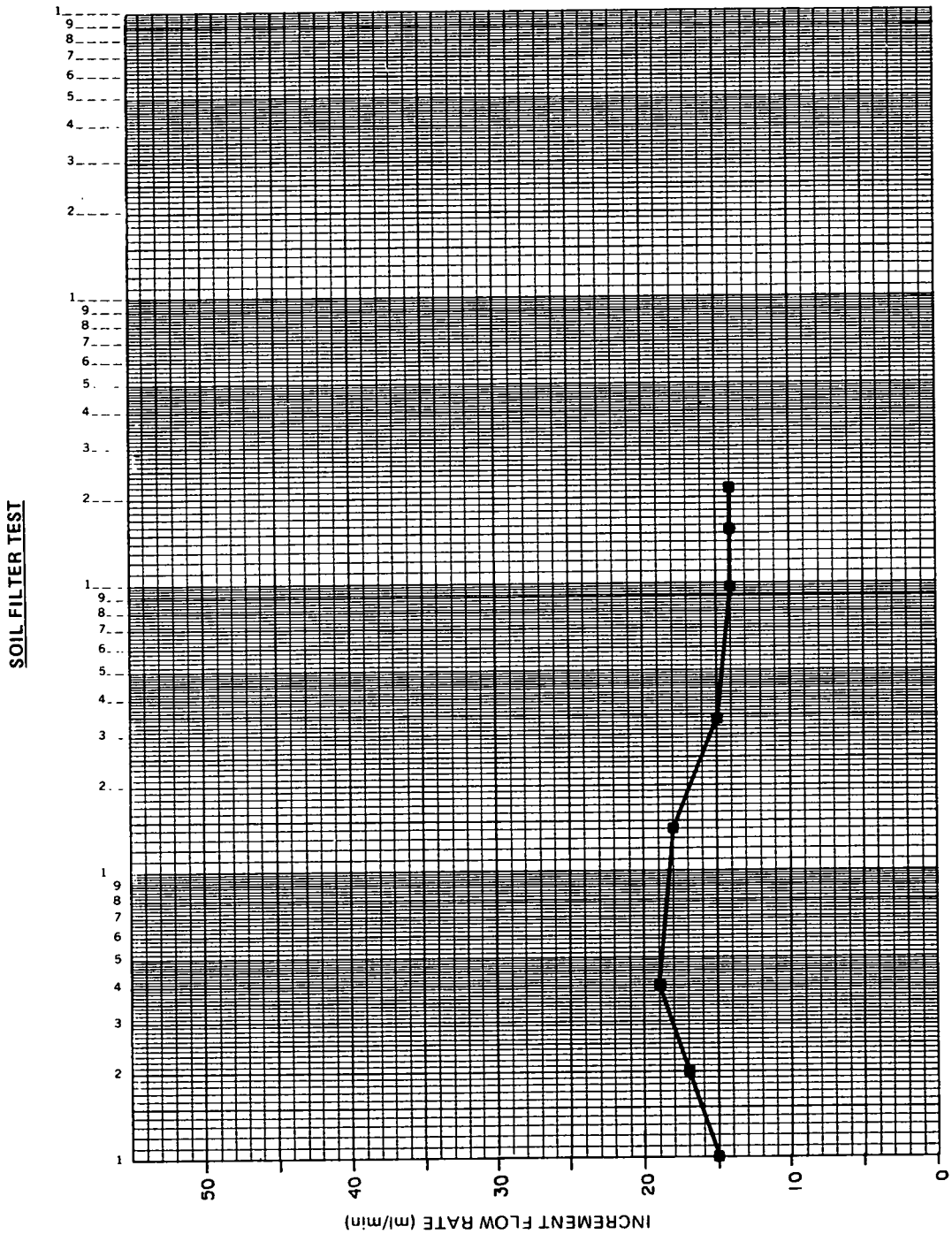

Figure 10. – Increment flow rate versus total elapsed time summary plot — 1.0 ft head example.

GPO 849 - 478

7-2313 (9-85)
Bureau of Reclamation

FILTER TEST FLOW DATA SHEET

Designation USBR 5630 - 89

PROJECT		FEATURE	
Example		Example	
TESTED BY	**DATE**	**COMPUTED BY**	**DATE**	**CHECKED BY**	**DATE**

Base Material: Sample No. 61S-200

Type of base specimen Compacted

Hydraulic head (ft) 2.0

Filter Material: Sample No. 61S-100

Comments

Time (a)	Time increment (min) (b)	Total elapsed time (min) (c)	Flow increment (mL) (d)	Total flow (mL) (e)	Increment flow rate (mL/min) (f)	Elapsed flow rate (mL/min) (g)	Comments (h)
0730			0	0			
0731	1.0	1.0	31	31	31	31	Effluent clear
0732	1.0	2.0	29	60	29	30	" "
0734	2.0	4.0	56	116	28	29	" "
0738	4.0	8.0	110	226	28	28	" "
0748	10.0	18.0	283	506	28	28	" "
0808	20.0	38.0	594	1100	30	29	" "
0908	60.0	98.0	1680	2780	28	28	" "
1008	60.0	158.0	1600	4380	27	28	" "
1108	60.0	218.0	1610	5990	27	27	" "
1208	60.0	278.0	1650	7640	28	27	" "

GPO 848-364

Figure 11. - Filter test flow data sheet — 2.0 ft head example.

7-2317 (12-85)
Bureau of Reclamation

Designation USBR 5630 - 89

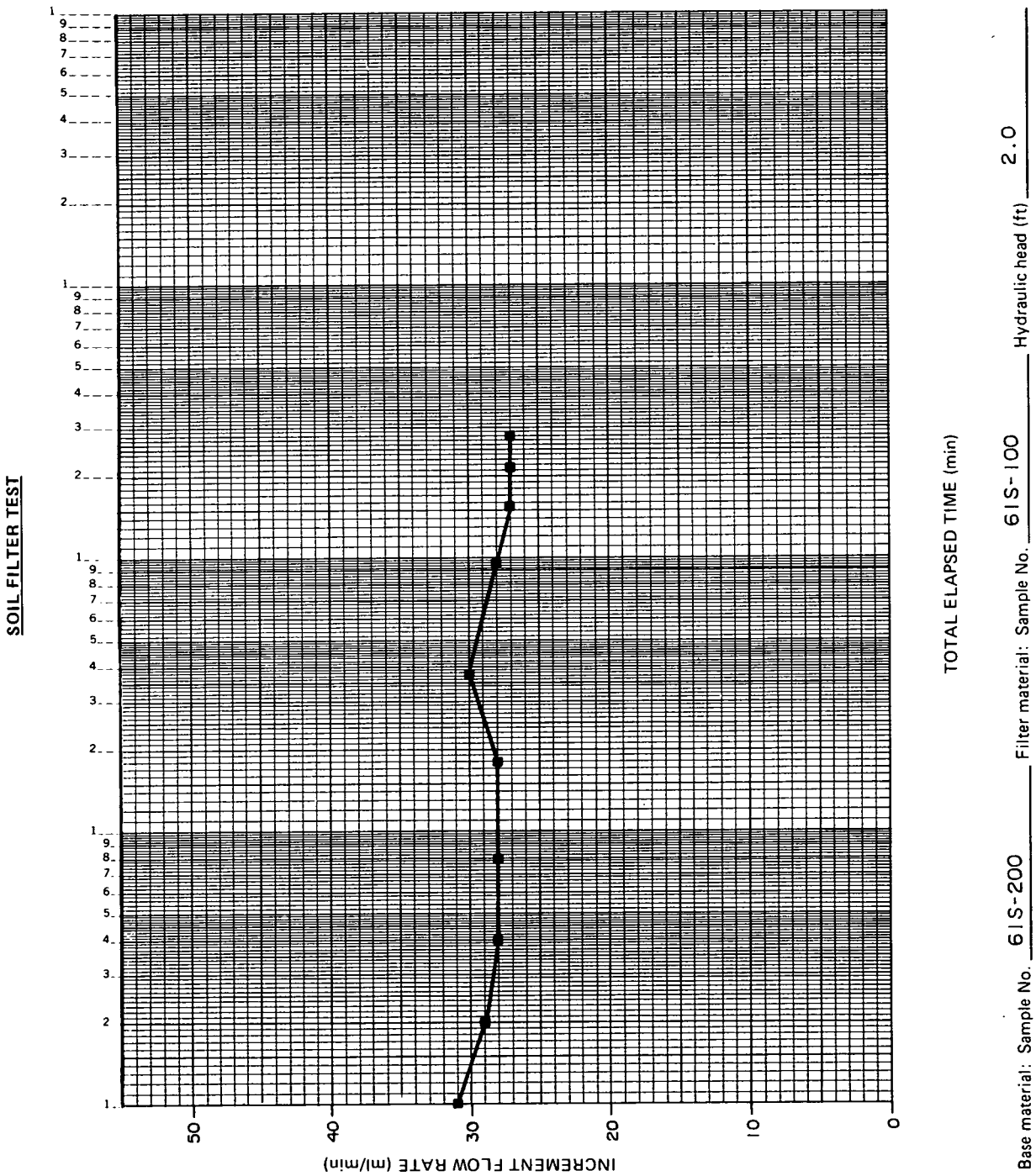

Figure 12. - Increment flow rate versus total elapsed time summary plot — 2.0 ft head example.

GPO 849 - 478

7-2318 (1-86)
Bureau of Reclamation

Designation USBR 5630 - 89

SOIL FILTER TEST

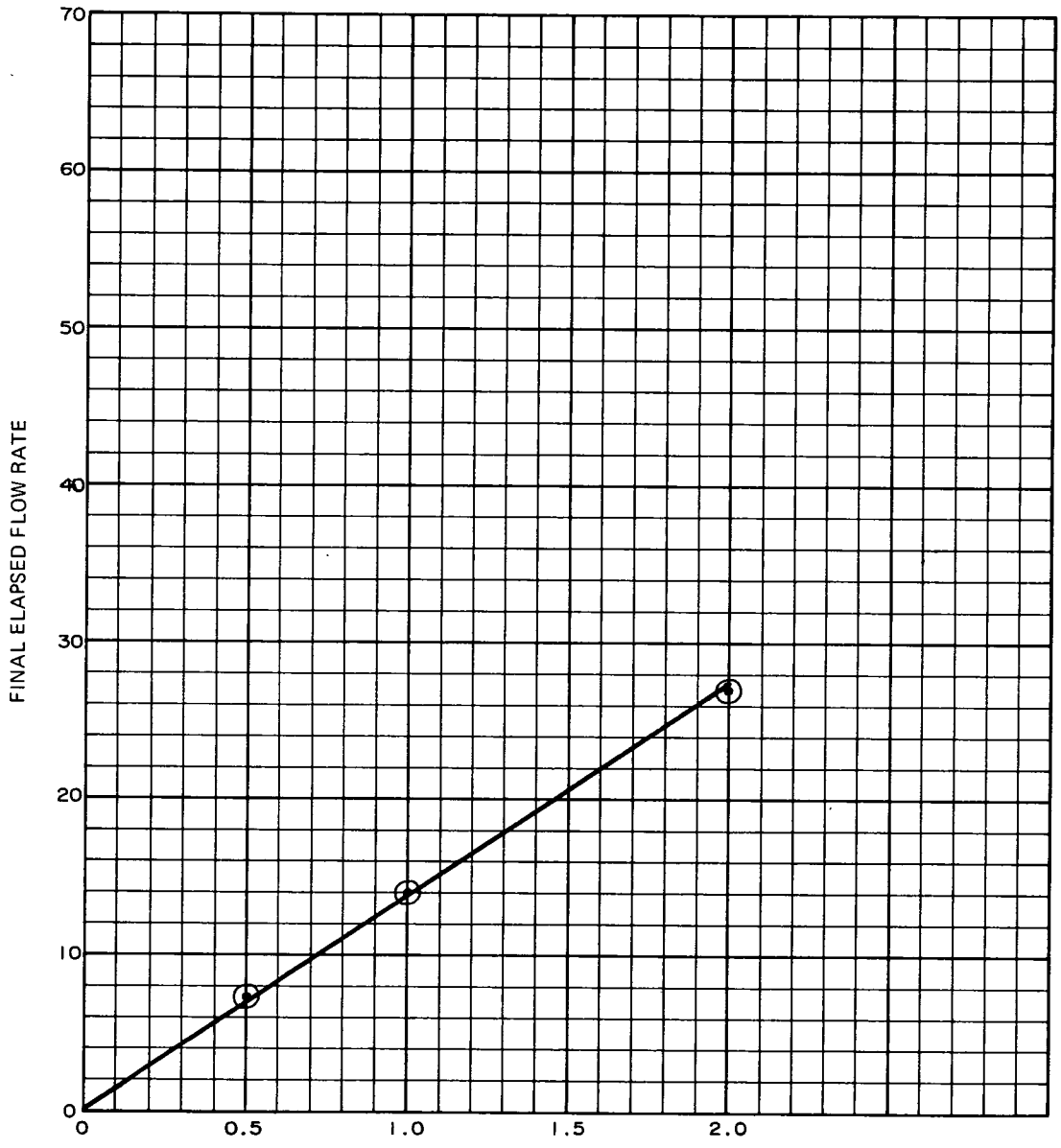

Base Material		Filter Material	
Sample No.	61S-200	Sample No.	61S-100
Classification	CL	Classification	SP
Placement:		Placement:	
Dry unit weight lbf/ft³	99.9	Dry unit weight lbf/ft³	111.9
Moisture content %	16.5	Moisture content %	0

GPO 849-608

Figure 13. - Soil filter test — final elapsed flow rate versus hydraulic head — example.

7-2319 (1-86)
Bureau of Reclamation

Designation USBR 5630- 89

SOIL FILTER TEST

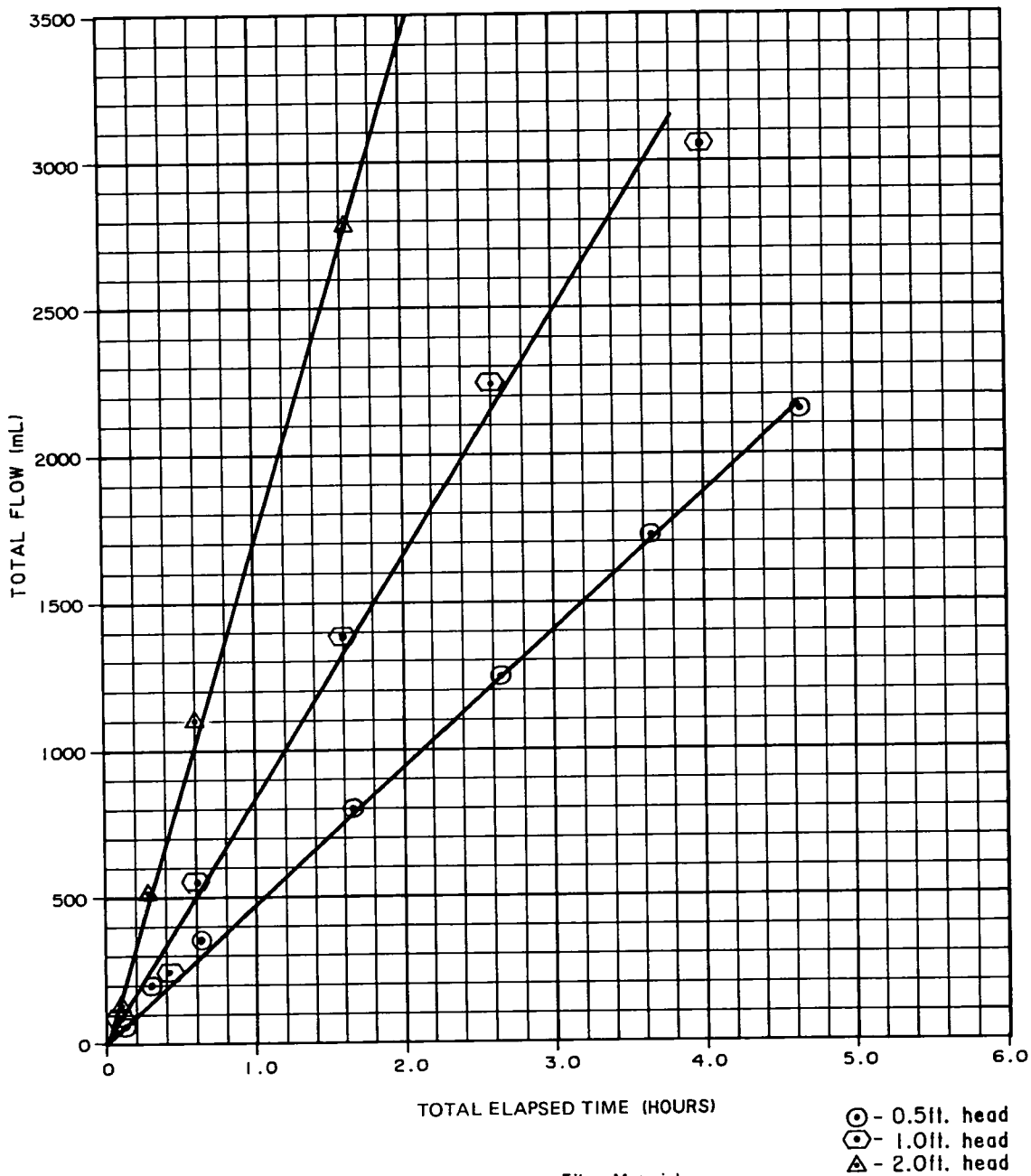

Base Material

Sample No. 61S-200
Classification CL
Placement:
Dry unit weight lbf/ft³ 99.9
Moisture content % 16.5

Filter Material

Sample No. 61S-100
Classification SP
Placement:
Dry unit weight lbf/ft³ 111.9
Moisture content % 0

GPO 849-609

Figure 14. - Soil filter test — total flow versus total elapsed time — example.

APPENDIX

X1. FILTER TEST SPECIMEN CONFIGURATION AND CYLINDER SYSTEM SELECTION GUIDELINES

X1.1 Scope

X1.1.1 This appendix gives guidelines for selecting the filter test specimen configuration and the cylinder system used for performing the tests.

X1.2 Guidelines

X1.2.1 All information is to be recorded on the "Filter Test Specimen and Test Equipment" form as shown on figure X1.1.

X1.2.2 The filter test specimen configuration used to evaluate a filter will depend on whether a soil or geotextile filter is to be tested, whether the filter is a single or multiple stage filter, and on the characteristics of the gradation of the base material to be protected. To evaluate a soil filter, the test specimen configuration should consist of a soil filter approximately 320 mm (12.6 in) thick and a soil base approximately 160 mm (6.3 in) thick. The soil filter should be compacted in lifts approximately 80 mm (3.1 in) thick to a dry unit weight equivalent to a relative density of approximately 65 to 70 percent. The soil can be compacted dry or wet, whichever facilitates placement and compaction.

The test specimen configuration for a geotextile filter is basically the same as soil filter except that the 320-mm (12.6-in) thick soil filter is replaced with a 320-mm thick compacted gravel base which provides bedding for the geotextile filter.

The base specimen can be either a compacted soil or a soil-water slurry. It is recommended that the soil-water slurry base specimen only be used when testing predominantly fine-grained soils that contain approximately 30 percent sand or less. Soils containing more than 30 percent coarse-grained soil (sand and gravel) should be tested as compacted base specimens. If a soil contains more than 30 percent sand, the sand will not remain in suspension in a soil-water slurry and will form a segregated filter on the surface of the filter specimen.

Placement conditions for the compacted base specimen can be guided by results of laboratory compaction tests or by test results from actual field conditions. In general, a compacted base specimen should be placed in 1.6-in (40-mm) thick compacted lifts to a dry unit weight equivalent to approximately 95 percent of the maximum laboratory compacted dry unit weight at a moisture content ranging from 0 to 2 percentage points dry of optimum moisture content.

A soil-water slurry base specimen should be thoroughly remolded to a consistency similar to motor oil, which may require a moisture content ranging from two to four times the liquid limit. The slurry should be prepared from dry to wet state; and when the desired consistency is obtained, the slurry moisture content, fluid density, and Marsh funnel viscosity should be measured (refer to subpar. X2.2.4).

X1.2.3 The filter test cylinder system used for filter testing depends on whether the filter is a single or staged filter, whether the filter is a soil or a geotextile, and on the maximum particle size of the filter material. Selection of the filter test cylinder system should be made using the following guidelines:

X1.2.3.1 A single stage filter can be tested in either the acrylic or aluminum cylinder systems; a multiple stage filter can be tested only in the acrylic cylinder system (refer to subpar. 8.2.1.1 and 8.2.1.2).

X1.2.3.2 The acrylic cylinder system is used for testing geotextile filters because the filter can be easily installed between two of the cylinder segments.

X1.2.3.3 Soil filter materials with maximum particle size less than 1-1/2 in (37.5 mm) can be tested in either cylinder system. Although particles up to 75 mm (3 in) in size can be tested in either system, it nears the practical limitations of the systems.

X1.2.4 A summary sheet containing information about the materials being tested, the placement conditions, and the filter configuration (specimen thickness and number of compacted lifts, etc.) is shown on figure X1.1.

7-2322 (9-85) Bureau of Reclamation	FILTER TEST SPECIMEN AND TEST EQUIPMENT	DESIGNATION USBR 5630 - 89
PROJECT Example	FEATURE Example	

TESTED BY	DATE	COMPUTED BY	DATE	CHECKED BY	DATE

BASE SPECIMEN

Sample No. 61S-200 Classification CL

Fines 25 % Sand 70 % Gravel 5 %

LL 36 % PI 18 %

Maximum laboratory compacted dry unit weight (lbf/ft³)		104
Minimum index unit weight (lbf/ft³)		–
Maximum index unit weight (lbf/ft³)		–

Type of base specimen: ☒ Compacted ☐ Slurry

Compacted

Desired placement dry unit weight (lbf/ft³)		98.8
Percent of maximum laboratory compacted dry unit weight	95	
Percent relative density	–	
Desired placement moisture content (%)		16.5
Specimen thickness (ft)		0.52
Number of compacted lifts		4

Slurry

Final slurry moisture content (%)	112
Final slurry unit weight (lbf/ft³)	88.4
Final slurry Marsh funnel viscosity (s)	52

FILTER SPECIMEN

Sample No. 61S-100 Classification SP

Fines 5 % Sand 95 % Gravel 0 %

Minimum index unit weight (lbf/ft³)	95.0
Maximum index unit weight (lbf/ft³)	120

Type of filter specimen: ☒ Compacted ☐ Geotextile

Compacted

Desired placement dry unit weight (lbf/ft³)		111
Percent relative density	70	
Desired placement moisture content (%)		0
Specimen th ickness (ft)		1.0
Number of compacted lifts		4

Geotextile

Name None used Manufacturer ——

Information

Figure X1.1. – Filter test specimen and test equipment — example.

X2. MASS OF SOIL REQUIRED FOR FILTER TEST SPECIMEN PLACEMENT

X2.1 Scope

X2.1.1 This appendix outlines the procedure for determining the mass of soil and water to be placed in each lift of the compacted soil filter and soil base specimens, and for determining the masses of soil and water required to make a soil-water slurry base specimen.

X2.2 Procedure

X2.2.1 All data are to be recorded on the "Mass of Soil Required for Filter Test Specimens (compacted base and filter specimens)" form as shown on figures X2.1 and X2.2, and on the "Mass of Soil Required for Filter Test Specimens (slurry base specimen)" form—if required—as shown on figure X2.3.

X2.2.2 The type of filter test cylinder system, the type of filter and base specimen, and the placement conditions for the test were predetermined (refer to app. X1).

X2.2.3 Compacted soil filter and soil base specimen:

X2.2.3.1 Record the values of the desired *Placement dry unit weight, lbf/ft³* and *Moisture content, %* of the compacted base and filter specimens to the nearest 0.1 lbf/ft³ and 0.1%, respectively on lines (1) and (2) of the form (figs. X2.1 and X2.2).

X2.2.3.2 Calculate and record [on line (3) of the form] *Placement wet unit weight, lbf/ft³* for the base and filter specimens to the nearest 0.1 lbf/ft³.

$$\gamma_{wet} = \gamma_d \left(1 + \frac{w}{100}\right) \qquad \text{(X2.1)}$$

where:

γ_{wet} = placement wet unit weight, lbf/ft³
γ_d = placement dry unit weight, lbf/ft³
w = placement moisture content, %

X2.2.3.3 The height of the base and filter specimens were predetermined (refer to app. X1). The area of the cylinder systems shall be obtained from previous calibrations. If the calibration of the area of the cylinder system is not current, calibrate the test cylinder according to procedures specified in USBR 1010. Record the correct cylinder area to the nearest 0.0001 m² [on line (4) of the form] *Area of filter test cylinder system, m².*

X2.2.3.4 Record the base and filter specimen heights to the nearest 0.001 m [on line (5) of the form] *Height of compacted test specimens, m.*

X2.2.3.5 Calculate and record the base and compacted filter specimens volume to the nearest 0.001 ft³ [on line (6) of the form] *Volume of compacted base or filter specimens, ft³.*

$$V = \frac{A\,H}{2.832 \times 10^{-2}} \qquad \text{(X2.2)}$$

where:

V = volume of the compacted base or filter specimens, ft³
A = area of the cylinder test system, m²
H = height of base or filter specimens, m
2.832×10^{-2} = convert from m³ to ft³

X2.2.3.6 Calculate and record the total wet mass for the base and filter specimens to the nearest 0.1 lbm [on line (7) of the form] *Total specimen mass, lbm.*

$$m_t = \gamma_{wet}\, V \qquad \text{(X2.3)}$$

where m_t equals total specimen mass of soil and water required to be placed in the base or filter specimens, lbm.

X2.2.3.7 The number of lifts for placing base and filter specimens is predetermined (refer to subpar. X1.2). Record the values for the base and filter specimens [on line (8) of the form] *Number of lifts per specimen.*

X2.2.3.8 Calculate the wet mass of soil and water to be placed in each lift and record the base or filter wet mass per lift [on line (9) of the form] *Wet mass of soil per compaction lift, lbm.*

$$m_l = \frac{m_t}{N} \qquad \text{(X2.4)}$$

where:

m_l = wet mass of soil per compaction lift to be placed in the base or filter(s), lbm
N = number of compaction lifts

X2.2.3.9 Record [on line (10) of the form] *Remarks.*

X2.2.4 Compacted soil filter and slurry base specimen:

X2.2.4.1 The mass of soil and water required for the filter specimen is calculated according to the procedures described in subparagraph X2.2.3.

X2.2.4.2 The volume of the slurry base specimen is equal to the volume of a compacted base specimen and is computed according to the procedures described in subparagraph X2.2.3.5. Record [on line (1) of the form (see fig. X2.3)] *Volume of equivalent compacted base specimen, ft³.*

X2.2.4.3 The slurry will be prepared to an initial moisture content equal to two times the LL (liquid limit) of the base material. Multiply the LL of the base soil by 2, and record to the nearest 0.1% [on line (2) of the form] *Initial slurry moisture content, %.*

X2.2.4.4 Calculate and record to the nearest 0.1 lbf/ft³ [on line (3) of the form] *Initial slurry unit weight, lbf/ft³.*

$$\gamma_f = \frac{62.4\, G_s \{1 + [2\,(LL)]\}}{1 + [2\, G_s\,(LL)]} \qquad \text{(X2.5)}$$

where:

γ_f = initial slurry unit weight, lbf/ft³
62.4 = unit weight of water, lbf/ft³
LL = liquid limit of base soil expressed as a decimal
G_s = specific gravity of base material (minus No. 4 material)

NOTE X2.1–If the specific gravity of the base material is unknown, use a specific gravity of 2.65.

X2.2.4.5 Calculate and record to the nearest 0.1 lbm [on line (4) of the form] *Initial slurry mass required, lbm* for the base specimen .

$$m_f = V_b \gamma_f \quad \text{(X2.6)}$$

where:

m_f = initial slurry mass required, lbm
V_b = volume of equivalent compacted base specimen, ft³

X2.2.4.6 Calculate and record to the nearest 0.1 lbm [on line (5) of the form] *Initial mass of soil in slurry, lbm.*

$$m_s = \frac{m_f}{1 + 2\ (\text{LL})} \quad \text{(X2.7)}$$

where m_s equals initial mass of soil required to make the slurry, lbm.

X2.2.4.7 Calculate and record to the nearest 0.1 lbm [on line (6) of the form] *Initial mass of water in slurry, lbm.*

$$m_w = 2\ (\text{LL})\ m_s \quad \text{(X2.8)}$$

where m_w equals initial mass of water in slurry, lbm.

X2.2.4.8 Place the required masses of soil and water together and mix thoroughly (a Hobart type mixer works well). Continue mixing the slurry until a homogeneous mixture with a viscosity similar to motor oil is obtained. If the mixture is judged to be too viscous (too thick) or if there is difficulty in blending the mixture, add water to the slurry mix. Record the mass of water added to the slurry to the nearest 0.1 lbm [on lines (7a) through (7d)] *Mass of water added to slurry during mixing, lbm.*

Determine the total mass of water added to the slurry during mixing and record to the nearest 0.1 lbm [on line (7e) of the form] *Total mass of water added to slurry, lbm.*

X2.2.4.9 Calculate and record to the nearest 0.1 lbm [on line (8) of the form] *Total mass of water in slurry, lbm.*

$$m_{wf} = m_w + m_{wa} \quad \text{(X2.9)}$$

where:

m_{wf} = total mass of water in slurry, lbm
m_w = initial mass of water in slurry, lbm
m_{wa} = total mass of water added to slurry, lbm

X2.2.4.10 Continue mixing the slurry. If the slurry becomes too thin, add soil to the slurry. Record the mass of soil added to the slurry during the mixing process to the nearest 0.1 lbm [on line(s) (9a) through (9d)]—as necessary—*Mass of soil added to slurry, lbm.*

Determine the total amount of soil added to the slurry during mixing and record to the nearest 0.1 lbm [on line (9e) of the form] *Total mass of soil added to slurry, lbm.*

X2.2.4.11 Calculate and record to the nearest 0.1 lbm [on line (10) of the form] *Total mass of soil in slurry, lbm.*

$$m_{sf} = m_s + m_{sa} \quad \text{(X2.10)}$$

where:

m_{sf} = total mass of soil in slurry, lbm
m_s = initial mass of soil in slurry, lbm
m_{sa} = total mass of soil added to slurry, lbm

X2.2.4.12 Calculate and record to the nearest 0.1 % [on line (11) of the form] *Final slurry moisture content, %.*

$$w_{final} = 100 \left(\frac{m_{wf}}{m_{sf}}\right) \quad \text{(X2.11)}$$

where w_{final} equals final slurry moisture content, %.

X2.2.4.13 Determine the final slurry unit weight in accordance with USBR 5891. Record to the nearest 0.1 lbf/ft³ [on line (12) of the form] *Final slurry unit weight, lbf/ft³.*

X2.2.4.14 Determine the final slurry Marsh funnel viscosity in accordance with USBR 5894. Record to the nearest 1 s [on line (13) of the form] *Final Marsh Funnel Viscosity, s.*

X2.2.4.15 Place the slurry in covered 5-gallon plastic buckets and store until ready to perform the filter test. The slurry should not be stored more than 5 days prior to use.

X2.2.4.16 Record [on line (14) of the form] *Remarks* regarding the mixing and testing of the slurry.

7-2320 (9-85) Bureau of Reclamation	MASS OF SOIL REQUIRED FOR FILTER TEST SPECIMENS (Compacted base and filter specimens)	Designation USBR 5630 - 89

PROJECT		FEATURE			
Example		Example			
TESTED BY	DATE	COMPUTED BY	DATE	CHECKED BY	DATE

FILTER SPECIMEN

Sample No. 61S-100 Classification SP

BASE SPECIMEN

Sample No. 61S-200 Classification CL

	Base	Filter	Filter
(1) Placement dry unit weight (lbf/ft³)	98.8	111	
(2) Moisture content (%)	16.5	0	
(3) Placement wet unit weight (lbf/ft³)	115	111	
(4) Area of filter test cylinder system	0.0670	0.0670	
(8.2.1.1 - Area = 0.0670 m²)			
(8.2.1.2 - Area = _____ m²)			
(5) Height of compacted test specimen (m)	0.160	0.320	
(6) Volume of compacted test specimen (ft³)	0.378	0.757	
(7) Total specimen mass (lbm)	43.5	84.0	
(8) Number of lifts per specimen	4	4	
(9) Wet mass of soil per compaction lift (lbm)	10.9	21.0	

(10) Comments

GPO 848 - 606

Figure X2.1. – Mass of soil required for filter test specimens (compacted base and filter specimens) — example.

7-2320 (9-85)
Bureau of Reclamation

MASS OF SOIL REQUIRED FOR FILTER TEST SPECIMENS
(Compacted base and filter specimens)

Designation USBR 5630 - 89

PROJECT		FEATURE			
Example		Example			
TESTED BY	DATE	COMPUTED BY	DATE	CHECKED BY	DATE

FILTER SPECIMEN

Sample No. 61S-100 Classification SP

BASE SPECIMEN

Sample No. 61S-200 Classification CL

	Base	Filter	Filter
(1) Placement dry unit weight (lbf/ft³)	–	111	
(2) Moisture content (%)	–	0	
(3) Placement wet unit weight (lbf/ft³)	–	111	
(4) Area of filter test cylinder system	0.0670	0.0670	
(8.2.1.1 - Area = 0.0670 m²)			
(8.2.1.2 - Area = _____ m²)			
(5) Height of compacted test specimen (m)	0.160	0.320	
(6) Volume of compacted test specimen (ft³)	0.378	0.757	
(7) Total specimen mass (lbm)	–	84.0	
(8) Number of lifts per specimen	–	4	
(9) Wet mass of soil per compaction lift (lbm)	–	21.0	

(10) Comments Slurry base specimen

GPO 848 - 606

Figure X2.2. – Mass of soil required for filter test specimens (compacted base and filter specimens) — slurry base example.

7-2321 (9-85) Bureau of Reclamation	MASS OF SOIL REQUIRED FOR FILTER TEST SPECIMENS (Slurry base specimen)	Designation USBR 5630 89

PROJECT		FEATURE			
Example		Example			
TESTED BY	DATE	COMPUTED BY	DATE	CHECKED BY	DATE

SLURRY BASE SPECIMEN

Sample No. 61S-200 Classification CL

Liquid limit (%) 36 Sand content (%) 25 Specific gravity of minus No. 4 2.65

(1)	Volume of equivalent compact base specimen (ft^3)	0.378
(2)	Initial slurry moisture content (%)	72.0
(3)	Initial slurry unit weight (lbf/ft^3)	97.8
(4)	Initial slurry mass required (lbm)	37.0
(5)	Initial mass of soil in slurry (lbm)	21.5
(6)	Initial mass of water in slurry (lbm)	15.5
(7)	Mass of water added to slurry during mixing (lbm)	
	(7a)	4.0
	(7b)	2.5
	(7c)	2.0
	(7d)	–
(7e)	Total mass of water added to slurry (lbm)	8.5
(8)	Total mass of water in slurry (lbm)	24.0
(9)	Mass of soil added to slurry (lbm)	
	(9a)	0
	(9b)	–
	(9c)	–
	(9d)	–
(9e)	Total mass of soil added to slurry (lbm)	0
(10)	Total mass of soil in slurry (lbm)	21.5
(11)	Final slurry moisture content (%)	111.6
(12)	Final slurry unit weight (lbf/ft^3)	88.4
(13)	Final slurry Marsh funnel viscosity (s)	52
(14)	Comments	Used estimated SpG value of 2.65
		Slurry was mixed and stored 3 days prior to testing.

GPO 848 - 607

Figure X2.3. – Mass of soil required for filter test specimens (slurry base specimen) — example.

UNITED STATES DEPARTMENT OF THE INTERIOR
BUREAU OF RECLAMATION

USBR 5700-89

PROCEDURE FOR

DETERMINING THE ONE-DIMENSIONAL CONSOLIDATION PROPERTIES OF SOILS (INCREMENTAL STRESS)

INTRODUCTION

This procedure is under the jurisdiction of the Geotechnical Services Branch, code D-3760, Research and Laboratory Services Division, Denver Office, Denver, Colorado. The procedure is issued under the fixed designation USBR 5700. The number immediately following the designation indicates the year of acceptance or last revision.

1. Scope

1.1 This designation outlines a procedure for determining one-dimensional consolidation properties of soils. This procedure can be performed using an undisturbed or a compacted specimen to determine the rate and amount of consolidation. Consolidation tests performed on sands or on varved or fractured soils may give less reliable results than tests performed on homogeneous specimens of cohesive soil.

1.2 This designation also outlines a procedure for determining the approximate permeability coefficient of a soil under a given pressure.

2. Auxiliary Tests

2.1 If the test is to be performed on an undisturbed specimen, a test sample must be obtained in accordance with USBR 7100 or 7105. If the test is to be performed using a compacted specimen, a soil sample must be prepared in accordance with USBR 5205. The initial and final moisture contents of the test specimen are to be determined in accordance with USBR 5300. The specific gravity of the soil must be determined in accordance with USBR 5320 in order to calculate the equivalent height of solids in the test specimen. The specimen must be prepared in accordance with USBR 5210 or 5215 prior to performing this procedure. The gradation analysis, liquid limit, plastic limit, and shrinkage limit are to be determined in accordance with USBR 5330, 5350, 5360, and 5365, respectively.

3. Applicable Documents

3.1 *USBR Procedures*:

USBR 1000 Standards for Linear Measurement Devices
USBR 1007 Calibrating Dial Indicators
USBR 1009 Calibrating Compaction Molds
USBR 1012 Calibrating Balances or Scales
USBR 1045 Calibrating Force Tranducers (Load Cells)
USBR 1420 Calibrating Head Tanks
USBR 5205 Preparing Soil Samples by Splitting or Quartering
USBR 5210 Preparing Compacted Soil Specimens for Laboratory Use
USBR 5215 Preparing Soil Specimens for Laboratory Use From Undisturbed Samples
USBR 5300 Determining Moisture Content of Soil and Rock by the Oven Method
USBR 5320 Determining Specific Gravity of Soils
USBR 5330 Performing Gradation Analysis of Fines and Sand Size Fractions of Soils, Including Hydrometer Analysis
USBR 5350 Determining the Liquid Limit of Soils by the One-Point Method
USBR 5360 Determining the Plastic Limit and Plasticity Index of Soils
USBR 5365 Determining Shrinkage Limit and Shrinkage Ratio of Soils
USBR 5705 Determining the One-Dimensional Expansion Properties of Soils
USBR 5715 Determining the One-Dimensional Uplift Properties of Soils
USBR 7100 Obtaining Undisturbed Block Samples by the Hand and Chain Saw Methods
USBR 7105 Performing Undisturbed Soil Sampling by Mechanical Drilling Methods

3.2 *ASTM Standard*:

D 2435 One-Dimensional Consolidation Properties of Soils

4. Summary of Method

4.1 A compacted or undisturbed soil specimen is prepared and placed in a fixed-ring consolidometer, which provides lateral restraint of the specimen but allows for axial loading and drainage, as shown on figure 1. A seating pressure (normally 1 lbf/in^2) is applied to the specimen and the initial height of the specimen is determined. Various predetermined pressure increments are applied to the specimen and each pressure increment is kept constant until primary consolidation is completed. Specimen height is measured at selected time intervals during each pressure increment. The specimen may be inundated with water at a predetermined pressure. After the selected pressure increments are completed, pressure on the specimen is decreased in selected decrements during which specimen height is measured to assess rebound characteristics.

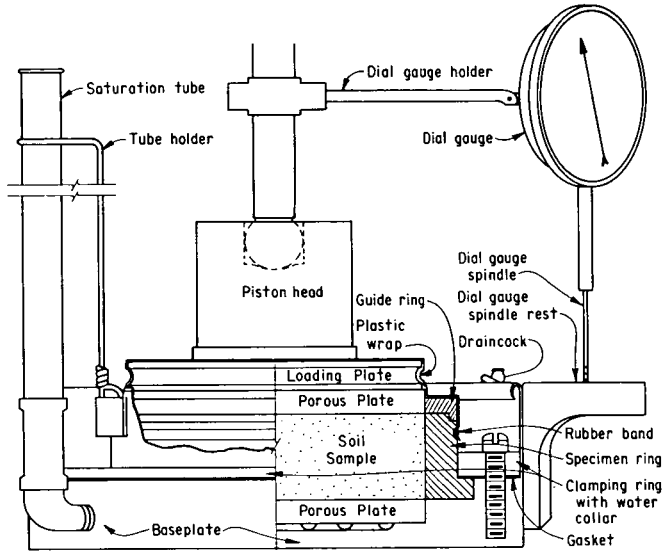

Figure 1. - Schematic of fixed-ring consolidometer.

5. Significance and Use

5.1 The one-dimensional consolidation test is performed to obtain data for predicting the rate and amount of settlement due to primary consolidation of a soil mass.

5.2 Field conditions that result in one dimensional strain can be modeled in this procedure. Various field conditions can be modeled by varying the pressure increments—the pressure increment at which water is added—or by including unload-reload cycles in the loading sequence.

6. Terminology

6.1 Definitions are in accordance with USBR 3900. Terms of particular significance are:

6.1.1 *Consolidation.*–The time-dependent reduction in volume of a soil mass resulting from an increase in effective stress.

6.1.2 *Initial Compression.*–An immediate reduction in volume of a loaded soil mass under an applied load due principally to expulsion and compression of gases in the soil voids.

6.1.3 *Primary Consolidation.*–The reduction in volume of a loaded soil mass due principally to expulsion of incompressible fluid from the void spaces of the mass and accompanied by a transfer of the load from the fluid to the soil solids.

6.1.4 *Secondary Consolidation.*–The reduction in volume of a loaded soil mass due to the time-dependent adjustment of the internal structure of the soil mass.

6.1.5 *Consolidation Curve.*–Any function relating volume change to time.

6.1.6 *Consolidometer.*–Apparatus used for one-dimensional consolidation/compression testing.

6.1.7 *Coefficient of Compressibility* (a_v, units depend on use).–The slope of a one-dimensional compression curve relating void ratio to effective stress.

$$a_v = -\frac{\Delta e}{\Delta \sigma'}$$

where:

Δe = change in void ratio
$\Delta \sigma'$ = change in effective stress

6.1.8 *Coefficient of Consolidation* (c_v, units depend on use).–A coefficient that relates the change in excess pore pressure with time to the excess pore pressure diffusion in the soil mass in terms of soil mass and pore fluid characteristics. The relationship corresponding to the linear one-dimensional infinitesimal strain consolidation theory is expressed as follows:

$$c_v = \frac{k\ (1 + e)}{a_v\ \gamma_w}$$

where:

k = coefficient of permeability
e = void ratio
a_v = coefficient of compressibility
γ_w = unit weight of water

6.1.9 *Coefficient of Permeability* (k, ft/yr or cm/s).–The rate of discharge of water under laminar flow conditions through a unit cross-sectional area of porous medium under a unit hydraulic gradient and standard temperature conditions (usually 20 °C) (ASTM definition).

6.1.10 *Void ratio* (e).–The ratio of: (1) the volume of void space, to (2) the volume of solid particles in a given soil mass (ASTM).

6.1.11 *Strain*(ϵ).–The change in length per unit length in a given direction (ASTM).

7. Interferences

7.1 *Friction*:

7.1.1 The specimen ring interior must be clean and smooth. The specimen ring may be made of brass or stainless steel.

7.1.2 Care must be taken when trimming a specimen to remove any coarse sand or fine gravel protruding from the sides of the specimen and to refill the void with fines. This reduces friction between the specimen and the sides of the specimen ring. Be sure to indicate in the report if any specimen voids were refilled.

7.1.3 Friction occurs between the specimen and specimen ring. The friction which occurs is not constant, but changes in part, due to soil variability. The Bureau's Geotechnical Services Laboratory does not correct the applied pressure to account for friction but does recognize that it exists and tries to minimize its effect.

7.2 *Height/Diameter Ratio.*–Specimen height to diameter ratio is to be between 1:2.5 and 1:3.5. If specimen height to diameter ratio is too low, the time to attain 100-percent consolidation may be too fast for defining the consolidation curve. If specimen height to diameter ratio

is too high, secondary consolidation may obscure the break in the consolidation curve.

7.3 *Porous Plates*:

7.3.1. Porous plates are to be cleaned to ensure maximum water flow to and from the specimen.

7.3.2 Top porous plates are to be smooth and level on the surface which faces the specimen. They are to fit into the specimen ring and guide ring with 0.015±0.005 inch clearance. This helps minimize loss of soil particles from around the edges of the plates.

7.3.3 Bottom porous plates are to be smooth and level on the surface which faces the specimen. They are to fit into the consolidometer baseplate with 0.015±0.005 inch clearance.

7.3.4 When testing specimens at pressures in excess of approximately 600 lbf/in^2, use sintered bronze porous plates because they are less brittle than either carborundum or ceramic porous plates. New sintered bronze porous plates should be preloaded to the maximum equipment load because some permanent deformation will occur.

NOTE 1.–If a permeability test is to be performed on a specimen with a small amount of fines, the porous plates will have to be checked for maximum measurable flow rate.

7.4 Permeability tests are to be performed using low heads to lessen the potential of piping or lifting of the specimen and to minimize the effect of changes in effective stress on the specimen.

7.5 *Sample Storage:*

7.5.1 Storage of samples in sampling tubes is not recommended for expansive soils even though stress relief may be minimized by keeping them confined in the tube. The influence of rust and the penetration of drilling fluid or free water into the sample may adversely influence laboratory test results.

7.5.2 If tube-type samples are to be stored prior to testing, the samples should be extruded from the tubes as soon as possible after sampling and thoroughly sealed to minimize further stress relief and moisture loss. The sample should be extruded from the sampling tube in the same direction as when sampled to minimize sample disturbance.

7.5.3 Soils susceptible to collapse upon disturbance, such as quick clays, or upon wetting should be handled with care.

8. Apparatus

8.1 *General Apparatus*:

8.1.1 *Balances or Scales.*–Typical balances or scales used for this designation are:

Application	*Readable to*	*Approximate capacity*
Moisture content	0.1 g	500 g
Mass of specimen	0.1 g	1000 g

8.1.2 *Dial gauge.*–A dial gauge readable to the nearest 0.0001 inch (0.003 mm) and having a minimum 1-inch (25-mm) travel.

8.1.3 *Drying Ovens.*–An oven, thermostatically controlled, preferably of the forced-draft type, and capable of maintaining a uniform temperature of 230±9 °F (110± 5 °C) throughout the drying chamber. Two ovens are recommended for this procedure.

8.1.4 *Stopwatch.*–A timing device readable to 1 second used to time test reading intervals.

8.1.5 Specimen preparation equipment as specified in USBR 5215.

8.1.6 Specimen compaction equipment as specified in USBR 5210.

8.2 *Equipment Specifically Used in This Procedure*:

8.2.1 *Pneumatic Load Frame.*–An air actuated loading device capable of applying a constant vertical load. The Bureau's laboratory uses a pneumatic load frame with dual range air pressure gauges as shown on figure 2. The pneumatic load frame has a 10,000 lbf maximum capacity, and may be equipped with two different sets of gauges as shown on figure 2. The smaller set of gauges (15 and 60 lbf/in^2) should be used wherever possible for increased accuracy.

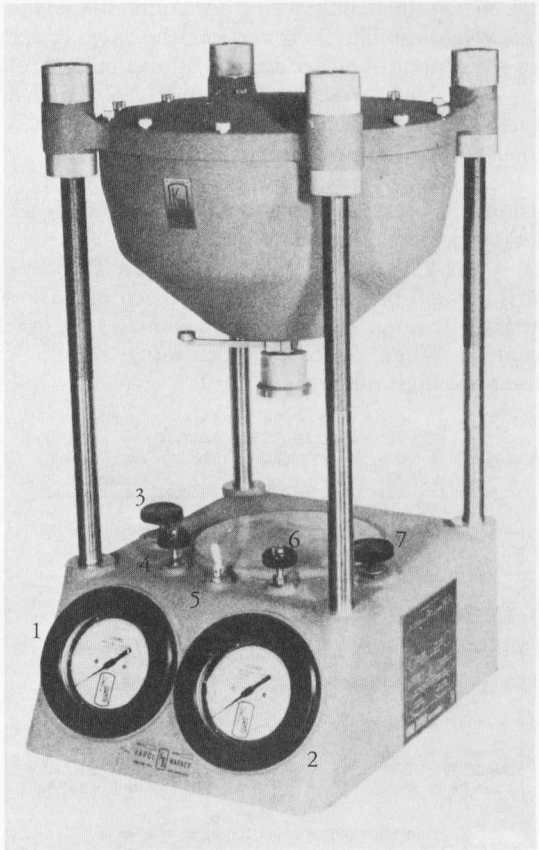

Figure 2. – Pneumatic load frame. (1) low range pressure gauge, (2) high range pressure gauge, (3) low range air control, (4) low range gauge shut-off, (5) load switch, (6) bleeder valve, (7) high range air control.

8.2.1.1 Controls for the pneumatic load frame are as follows and as shown on figures 2 and 3.

8.2.1.1.1 *Low Range Pressure Gauge.*-(1) — Pressure gauge used when applying loads from 0 to 1,500 or 0 to 3,000 lbf depending on the pneumatic load frame.

8.2.1.1.2 *High Range Pressure Gauge.*-(2) — Pressure gauge used when applying loads from 0 to 6,000 or 0 to 10,000 lbf. Visually used in conjunction with the low range pressure gauge to apply the lower load on the specimen.

8.2.1.1.3 *Low Range Air Control.*-(3) — A precision air pressure control valve. Turning this valve increases or decreases the air pressure.

8.2.1.1.4 *Low Range Gauge Shut-Off.*-(4) — This needle valve is located near the low range air control. Turning the handwheel clockwise shuts the valve. When open, this valve passes the output of the low range air control to the low range pressure gauge, and to the load switch. When closed it keeps the air pressure, when using the high range pressure gauge, from going through the low range pressure gauge.

8.2.1.1.5 *Load Switch.*-(5) — This quick opening globe valve is actuated by a 90° motion of a toggle handle. When the handle is in a horizontal plane, the valve is shut. When the handle is vertical, the valve is open and passes the output of either air control to the load cell.

8.2.1.1.6 *Bleeder Valve.*-(6) — The valve is used to vent air pressure from the load cell. When open it exhausts the high pressure air in the load cell.

8.2.1.1.7 *High Range Air Control.*-(7) — A precision air pressure control valve. Turning this valve clockwise increases the air pressure.

8.2.1.1.8 *Range Selector Switch.*-(8) — The valve is located on the back of the machine base. When pushed in, the range selector switch activates the low range air control. When pulled out, the range selector switch activates the high range air control.

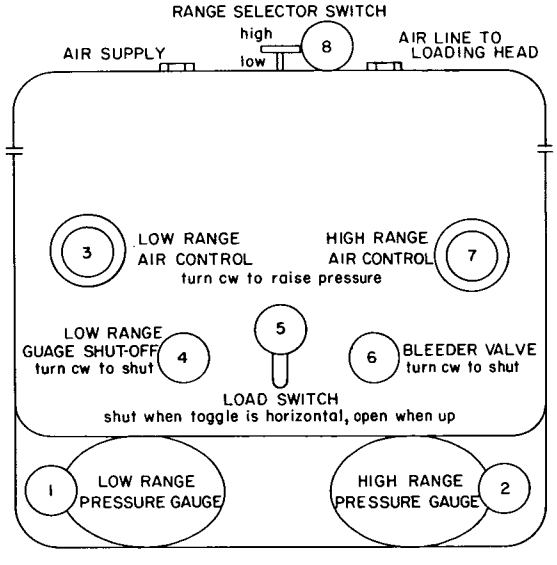

Figure 3. - Plan view of pneumatic load frame controls.

8.2.1.2 *Gauges.*-Gauges typically used for monitoring various pressures:

Specimen diameter *in*	*Maximum applied pressure to specimen* *lbf/in²*	*Recommended pressure gauge set* *lbf/in²*
2.00	1,900	15, 60
2.00	3,180	30, 100
4.25	420	15, 60
4.25	700	30, 100

8.2.2 *Fixed-Ring Consolidometer* (figs. 1 and 4).- A brass or stainless steel container designed to hold a soil specimen during a one-dimensional consolidation test. The specimen ring is securely clamped (fixed) to a baseplate. Change in height of the specimen is measured by means of a dial gauge attached to a dial gauge holder. A specimen ring restrains lateral expansion of the specimen, but allows unrestrained axial expansion or compression during testing. A clamping ring with a water collar holds the specimen ring in the baseplate and the water reservoir facilitates specimen wetting through the top porous plate. A rubber gasket prevents water loss between the baseplate and clamping ring. A guide ring holds the top porous plate in place and one or more loading plates distribute the applied load evenly over the specimen. Each fixed-ring consolidometer should be used as a set with alignment markings on the baseplate, porous plates, and loading plate(s).

8.2.2.1 *Specimen Ring.*-A brass or stainless steel ring with a highly polished inner surface. Specimen rings have an inside diameter of 4.250±0.001 inch and a height of 1.250±0.001 inch. Specimen rings having an inside diameter of 2.000±0.001 inch and a height of 0.750±0.001 inch may also be used. Other specimen ring sizes are acceptable if the height to diameter ratio is within limits stated in subparagraph 7.2.

8.2.2.2 *Porous Plates.*-Two porous plates, made of 340-grade sintered bronze or coarse-grade silicon carbide are required. The plates are to be clean and free of cracks, chips, or other nonuniformities and are to be air-dried prior to use. Porous plates are to have diameters of 4.220±0.001 inch for the top porous plate and 4.120±0.001 inch for the bottom porous plate for specimen rings with an inside diameter of 4.25 inches. For a specimen ring with an inside diameter of 2.00 inches the top porous plate are to have diameters of 1.980±0.001 inch. All porous plates are to have a thickness of 0.375±0.002 inch.

8.2.2.3 *Loading Plate.*-A brass or stainless steel loading plate, 0.375±0.002 inch thick and either 4.125±0.002 inch or 1.850±0.002 inch in diameter depending on the size of the specimen ring used.

8.2.3 *Gauge Blocks.*-Two gauge block reference standards are required. One block 1.25±0.0002 inch in height and 4.00±0.002 inch in diameter; one block 0.750±0.0002 inch in height and 1.75±0.002 inch in diameter.

8.2.4 *Cover Plates.*-Plastic or glass plates about 6-inches square and 0.25-inch thick. These are to be marked as pairs.

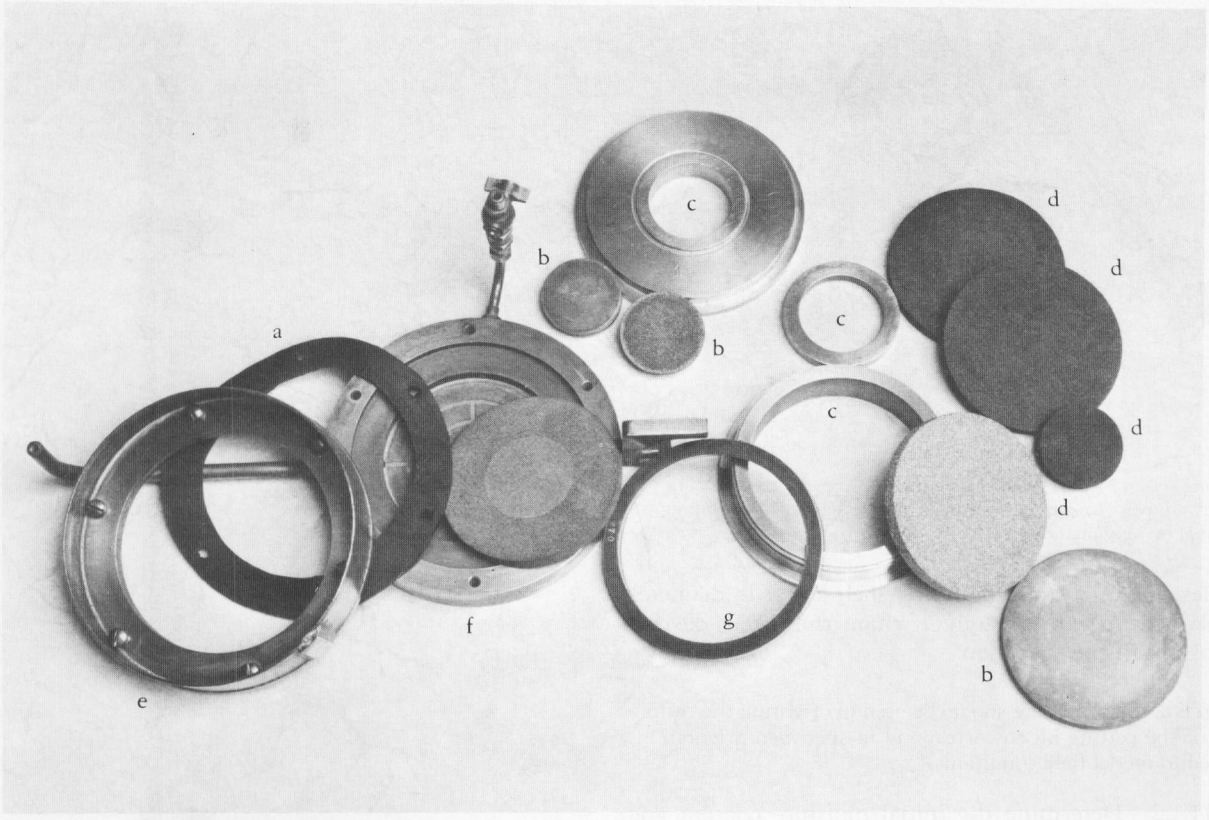

Figure 4. – Unassembled fixed-ring consolidometer. (a) gasket (rubber), (b) loading plates, (c) specimen ring, (d) porous plates, (e) water collar with clamping ring, (f) baseplate, (g) guide ring.

8.2.5 *Specimen (4.25-inch diameter) Compaction Equipment* (fig. 5):

8.2.5.1 *Compaction Collar.*–A metal collar 3.625±0.002 inch in height having an inside diameter of 4.25±0.005 inch and an outside diameter of 5.75±0.005 inch. A 4.25-inch diameter specimen rather than a 2.00-inch diameter specimen is normally compacted to obtain a more representative specimen.

8.2.5.2 *Clamping Ring.*–A brass ring 0.375±0.002 inch in height having an inside diameter of 5.01±0.002 inch and an outside diameter of 6.75±0.005 inch.

8.2.5.3 *Tamper.*–A metal tamper having a head diameter greater than one-half the inside diameter of the compaction collar (fig 5).

8.2.5.4 *Try Square.*–A tool capable of measuring depths and readable to 1/32 inch.

8.3 *Head Tank.*–A glass cylinder (fig. 6), 55-mm inside diameter, marked in 0.1-centimeter increments up to 80.0 cm. A rubber stopper with a 38-inch long and 4-mm inside diameter glass tube protruding through the top.

8.4 *Miscellaneous Equipment.*–Saturation tube and holder, rubber tubing, pipettes, a water container for adding water to the specimen; plastic wrap and rubberbands may be needed for maintaining the moisture content of the specimen prior to and during testing; porcelain and copper drying pans for drying the specimen and trimmings after testing; squeeze bottle and soft bristle brushes for cleaning the specimen container at the end of the test.

9. Reagents and Materials

9.1 Unless in-place water is requested, tapwater that is free of acids, alkalies, or oils and is suitable for drinking is to be used for wetting the soil specimen.

9.2 The air supply to the pneumatic load frame is to be filtered to remove any moisture, dust, and oil.

10. Precautions

10.1 *Safety Precautions*:

10.1.1 Spilled water is to be cleaned up immediately to prevent slipping.

10.1.2 Safety shoes are to be worn when transferring the consolidometer to or from the pneumatic load frame.

10.1.3 A ladder is to be used when reading the head tank during a permeability test.

10.1.4 Use asbestos gloves when removing containers from the drying ovens.

10.2 *Technical Precautions.*–Because of the large number of technical precautions in this procedure, CAUTION statements are noted throughout the text.

11. Sampling, Test Specimens, and Test Units

11.1 *Undisturbed Specimens.*

11.1.1 Prepare undisturbed specimens in accordance with USBR 5215. Specimens are to be prepared from

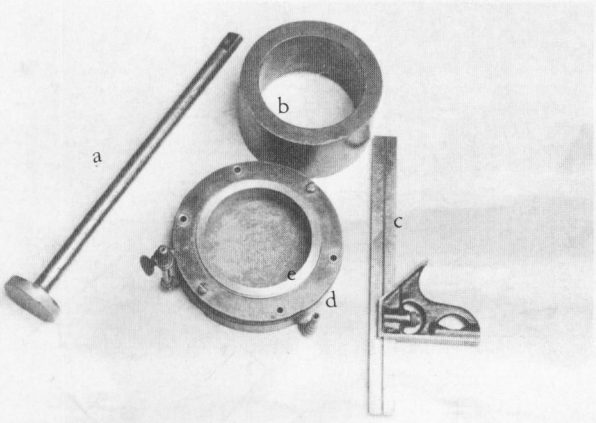

Figure 5. – 4.25-inch diameter specimen compaction equipment. (a) tamper, (b) compaction collar, (c) try square, (d) clamping ring, (e) specimen ring.

samples that are a minimum of 1-inch larger in diameter and 1-inch (25 mm) longer than the final desired dimensions of the specimen.

NOTE 2.–Extreme care should be used in orienting the cutting plane of the cutting bit to correspond to specimen orientations required to model field conditions.

11.1.2 Determine the initial moisture content and specific gravity of the specimen from specimen trimmings in accordance with USBR 5300 and 5320. The results should be recorded on the "One-Dimensional Consolidation Test" data sheet 1 (fig. 7).

11.1.3 If required, determine particle-size distribution, liquid limit, plastic limit, plasticity index, and shrinkage limit, in accordance with USBR 5330, 5350, 5360, and 5365, respectively. These tests should be performed using trimmings obtained when preparing the undisturbed specimen.

11.2 *Compacted Specimens*:

11.2.1 Prepare a soil sample in accordance with USBR 5205. A minimum 2-lbm (0.9-kg) [preferably 5 lbm (2.3 kg)] sample of soil passing the No. 4 (4.75 mm) sieve is required for each 4.25-inch (108-mm) diameter specimen; and at least 1 lbm (0.5 kg), [preferably 2 lbm (0.9 kg)] of soil passing the No. 4 (4.75 mm) sieve is required for each 2-inch (51-mm) diameter specimen.

11.2.2 Determine and record the initial moisture content in accordance with USBR 5300 as shown on lines 13 through 19 of data sheet 1 (fig. 7).

11.2.3 Prepare a soil sample for compaction in accordance with USBR 5210.

11.2.4 Obtain the consolidometer baseplate used for compacting a soil specimen. Make sure the baseplate has an air-dried porous plate located in the base.

11.2.5 Place a plastic film (mylar) over the bottom porous plate to ensure that the soil specimen does not adhere to the porous plate. The plastic film should be large enough to cover the bottom of the compacted specimen. Place the specimen ring into the baseplate.

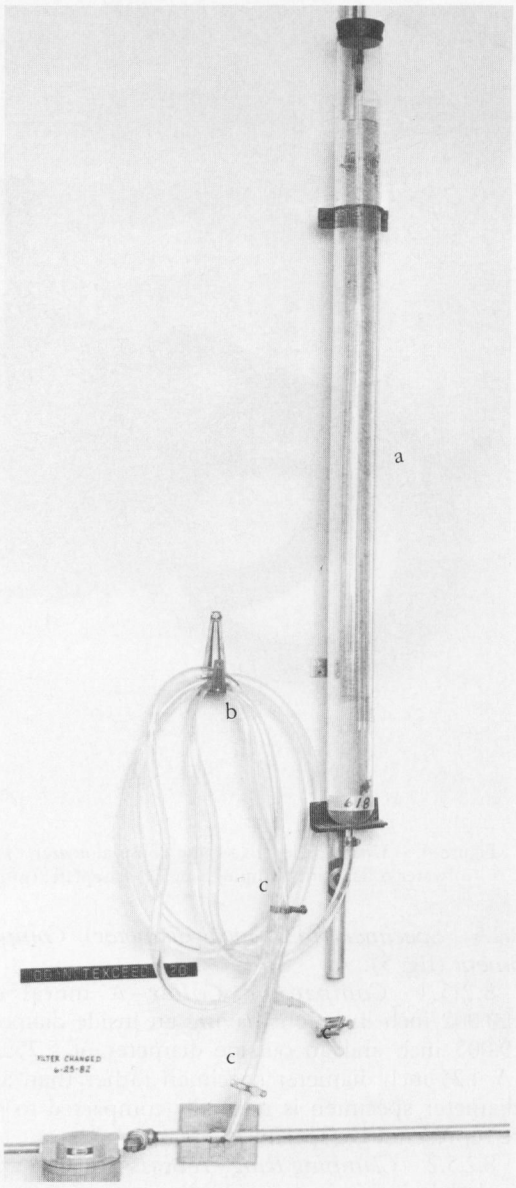

Figure 6. – Head tank apparatus for permeability testing. (a) glass head tank, (b) 1/8-inch plastic tubing, (c) hose clamps.

11.2.6 Ensure that the clamping ring gasket is not cracked and is flexible. Place the gasket on the baseplate and secure the clamping ring to the baseplate.

11.2.7 Place the compaction collar over the specimen ring and onto the clamping ring.

11.2.8 Compact the soil specimen in accordance to USBR 5210. Record the data required in subparagraph 11.2.8.1 through 11.2.8.4 on the appropriate form described in USBR 5210 and as shown on figure 8. Complete the "Compaction Data for Specimens of Minus No. 4 Material" form paying particular attention to subparagraphs 11.2.8.1 through 11.2.8.6.

11.2.8.1 Record the specimen ring number in the space provided for *Mold No.* (line 4, fig. 8).

7-2417 (3-89) Bureau of Reclamation	ONE-DIMENSIONAL CONSOLIDATION TEST (DATA SHEET 1)	Designation USBR 5700 - 89

Project: Example	Feature: Example	
Tested By / Date	Computed By / Date	Checked By / Date
Sample No.: 1	Specimen No.: 51	

PHYSICAL PROPERTIES:

Liquid Limit: 32 %	Plasticity Index: 20 %	Shrinkage Limit: ——— %
Specific Gravity (Gs): 2.69	Classification Symbol: CL	
Specimen Type: [X] Undisturbed [ ] Compacted	Type of Test: [X] Consolidation [ ] Uplift [ ] Expansion	

(1) Load Frame No.: 106	(3) Gauge Block No.: 1	
(2) Specimen Ring No.: 208	(4) Gauge Block Height: 1.25	[X] in [ ] cm
(5) Specimen Ring Diameter	4.25	[X] in [ ] cm
(6) Specimen Ring Area = $(5)^2 \frac{\pi}{4}$	14.19	[X] in^2 [ ] cm^2
(7) Specimen Ring Height /	1.25	[X] in [ ] cm
(8) Specimen Ring Volume = (6) (7)	17.74	[X] in^3 [ ] cm^3
(9) Dial Reading With Seating Pressure on Gauge Block	0.2595	[X] in [ ] cm
(10) Dial Reading With Seating Pressure on Specimen	0.2517	[X] in [ ] cm
(11) Initial Specimen Height = (4) - (9) + (10)	1.2422	[X] in [ ] cm
(12) Equivalent Height of Solids = (26) / [(6) $G_s \rho_w$] C [1/]	0.867	[X] in [ ] cm

MOISTURE CONTENT DETERMINATION OF SPECIMEN

		INITIAL	FINAL
(13) Drying Pan Number		119	11
(14) Mass of Drying Pan	g	204.0	200.3
(15) Mass of Drying Pan + Wet Specimen	g	454.5	817.4
(16) Mass of Drying Pan + Dry Specimen	g	425.3	732.9
(17) Mass of Water (15) - (16)	g	29.2	84.5
(18) Mass of Dry Specimen = (16) - (14)	g	221.3	532.6
(19) Moisture Content = [(17) / (18)] x 100	%	13.2	15.9

INITIAL WET MASS DETERMINATION OF SPECIMEN

(20) Mass if Specimen Ring + Cover Plates	g	1213.8
(21) Mass of Specimen Ring + Cover Plate + Wet Soil	g	1825.3
(22) Mass of Wet Soil = (21) - (20)	g	611.5

DRY UNIT WEIGHT OF SPECIMEN

(23) Mass of Wet Soil = (22)	g	611.5
(24) Initial Moisture Content = (19)	%	13.2
(25) Specimen Ring Volume = (8)	[X] in^3 [ ] cm^3	17.74
(26) Mass of Dry Soil = (23) / [1 + (24) / 100]	g	540.2
(27) Dry Unit Weight = [(26) / (25)] C [2/]	[X] lbf/ft^3 [ ] kN/m^3	116.0

1/ ρ_w is the density of water at 71.5 F. For inch pound applications ρ_w = 62.29 lbm/ft^3 For SI metric applications ρ_w = 1 g/cm^3
C is a conversion factor, for inch-pound applications C = 3.8095. For SI metric applications C = 1.000.
2/ For inch pound application, C = 3.8095 and converts g/in^3 to lbf/ft^3 assuming lbf = lbm. For SI metric application, C = 9.807 and converts g/cm^3 to kN/m^3

Figure 7. – One-dimensional consolidation test (data sheet 1) — example.

7-2388 (12-86)
Bureau of Reclamation

COMPACTION DATA FOR SPECIMENS OF MINUS NO. 4 MATERIAL (DATA SHEET 1)

Designation USBR 5210-89

PROJECT	FEATURE
Example	Example
COMPUTED BY / DATE	CHECKED BY / DATE

1. SAMPLE NO. 1
2. COMPACTION METHOD: [X] TAMPING COMPACTION [ ] POURING WITH VIBRATION
3. TEST DESIGNATIONS: 5700-89

4. COMPACTION MOLD SYSTEM: [ ] SPLIT MOLD [X] RIGID MOLD [ ] STAND-UP VACUUM MOLD NO. 208
   - 4a. [X] CIRCULAR MOLD
   - 4b. DIAMETER 4.25 (in) 4c. HEIGHT 1.25 (in)
   - 4d. LINER THICKNESS N/A (in)
   - 4e. AREA = 0.7854[a/] [(4b) - 2 x (4d)]^2 14.19 (in^2)
   - 4f. VOLUME = [(4c) - (4d)] x (4e) 17.74 (in^3)
   - 4g. [ ] SQUARE MOLD
   - 4h. LENGTH 1 (in) 4i. LENGTH 2 (in)
   - 4j. HEIGHT (in) 4k. LINER THICKNESS (in)
   - 4L. AREA = [(4h) - (2 x (4k))] [(4i) - (2 x (4k))] (in^2)
   - 4m. VOLUME = [(4j) - (4k)] (4L) (in^3)

5. PLACEMENT CONDITIONS
   - 5a. DESIRED DRY UNIT WEIGHT 95 (lbf/ft^3)
   - 5b. PERCENTAGE OF LABORATORY CONTROL TEST [ ] % Comp [ ] % RD 100
   - 5c. DESIRED MOISTURE CONTENT 13.0 (%)
   - 5d. SPECIFIC GRAVITY 2.69

6. COMPACTION DATA
   - 6a. MASS OF DRY SOIL PER SPECIMEN = (5a)(4f or 4m)(5.787 x 10^{-4})[b/] 0.975 (lbm)
   - 6b. NUMBER OF SPECIMENS PER TEST 1
   - 6c. MASS OF DRY SOIL PER TEST = (6a) (6b) [1.05 or 2.0][c/] 1.950 (lbm)
   - 6d. COMPACTION — MOISTURE CONTENT 13.2 (%)
   - 6e. NUMBER OF LIFTS PER SPECIMEN 3
   - 6f. MASS OF WET SOIL PER LIFT = $\frac{(6a)}{(6e)}\left[1 + \frac{(6d)}{100}\right]$[d/] 0.368 (lbm)
   - 6g. MASS OF WET SOIL PER LIFT = 453.6[e/] (6f) 166.9 (g)

7.

		LIFT NO.	MASS OF WET SOIL PLUS CONTAINER [ ] lbm [X] g			LIFT NO.	MASS OF WET SOIL PLUS CONTAINER [ ] lbm [ ] g
7a.			1000.0				
7b.	(7a) - (6g)	1	833.1	7g.	(7f) - (6g)	6	
7c.	(7b) - (6g)	2	666.2	7h.	(7g) - (6g)	7	
7d.	(7c) - (6g)	3	499.3	7i.	(7h) - (6g)	8	
7e.	(7d) - (6g)	4		7j.	(7i) - (6g)	9	
7f.	(7e) - (6g)	5		7k.	(7j) - (6g)	10	

a/ CONSTANT = $\pi/4$

b/ CONSTANT = $\frac{1 ft^3}{1728 in^3} \cdot \frac{1 lbm}{1 lbf}$

c/ CONSTANT = FACTOR TO PROVIDE EXCESS MATERIAL FOR MOISTURE CONTENT DETERMINATION
= 1.05 FOR LARGE SPECIMENS AND 2.0 FOR SMALL SPECIMENS

d/ CONSTANT = $\frac{1.00\%}{1.00}$

e/ CONSTANT = $\frac{453.6 g}{1 lbm}$

Figure 8. – Compaction data for specimens of minus No. 4 material (data sheet 1) — example.

11.2.8.2 Record the nominal height and diameter of the specimen ring (lines 4b and 4c, fig. 8).

11.2.8.3 Record the required placement dry unit weight and placement moisture content (line 5a, fig. 8).

11.2.8.4 Compact the specimen in three lifts unless otherwise stated in the testing program.

11.2.8.5 Record the moisture content at which the specimen was compacted as *Initial moisture content* on line 24 of the "One-Dimensional Consolidation Test" data sheet 1 (fig. 7).

11.2.8.6 After the compaction collar is removed, the specimen is trimmed level with the top of the specimen ring using a straightedge trimmer.

11.2.9 Remove the clamping ring and rubber gasket, and place a cover plate on top of the specimen.

11.2.10 Invert the consolidometer baseplate to allow removal of the specimen ring with specimen. Make sure the plastic film is removed from the bottom of the specimen. Trim the bottom of the specimen level with the bottom of the specimen ring and specimen. Place the second cover plate over the bottom of the specimen ring. Take care to minimize specimen moisture loss.

11.2.11 Calculate the specimen *Dry unit weight* as shown on lines 23 through 27 of data sheet 1 (fig. 7). If the specimen dry unit weight is within ±1 percent of the desired dry unit weight then proceed, if not recompact specimen using new material.

12. Calibration and Standardization

12.1 Verify that equipment is currently calibrated. If the calibrations are not current, perform the calibrations according to the appropriate following designations before using the equipment.

USBR 1000 Standards for Linear Measurement Devices
USBR 1007 Calibrating Dial Indicators
USBR 1012 Calibrating Balances or Scales
USBR 1020 Calibrating Ovens
USBR 1045 Calibrating Force Transducers (Load Cells)
USBR 1420 Calibrating Head Tanks

12.2 *Consolidometer Equipment Calibration* (deformation).–Prior to performing a one-dimensional consolidation test, determine the consolidation test equipment deformation. The procedure for determining consolidation test equipment deformation is described in appendix X2.

12.3 *Pneumatic Load Frame Calibration.*–Follow the procedure outlined in appendix X3 if the pneumatic load frame calibration is not current.

12.4 *Calibrating the Specimen Ring.*–If the specimen ring calibration is not current, calibration will be performed using a calibration plug. The procedure for calibration is described in appendix X4.

13. Conditioning

13.1 The test specimen is to be prepared, placed, and tested as quickly as possible to minimize unrecorded moisture loss.

14. Procedure

14.1 All data are to be recorded on the "One-Dimensional Consolidation Test" forms as shown on figures 7 and 9 (data sheets 1 and 2), respectively.

14.1.1 Record number and height of the gauge block at the seating pressure on lines 3 and 4, respectively, as shown on data sheet 1 (fig. 7).

14.1.2 Locate and record the pneumatic load frame number and the specimen ring number on lines 1 and 2, respectively, as shown on data sheet 1 (fig. 7). Record the nominal height and diameter of the specimen ring on lines 5 and 7, respectively, as shown on data sheet 1 (fig. 7). Calculate and record the specimen ring area and volume on lines 6 and 8, respectively, as shown on data sheet 1 (fig. 7).

14.1.3 Using one fixed-ring consolidometer, place the clean bottom porous plate in the consolidometer baseplate. Ensure that the porous plate is flush with and fits snugly into the recess in the baseplate with the smooth side toward the specimen and the plate aligned with the marks on the consolidometer baseplate.

14.1.4 Place the gauge block on the center of the bottom porous plate.

14.1.5 Place the specimen ring into the baseplate of the consolidometer.

14.1.6 Ensure the gasket is not cracked and is flexible. Place the gasket on the baseplate and secure the clamping ring with water collar to the baseplate.

14.1.7 Place the top porous plate on the gauge block, and place the guide ring on top of the specimen ring.

CAUTION.–If the fit of the porous plate is loose, soil may escape and result in erroneously high consolidation values. If the porous plate rubs on the inside of the guide ring or specimen ring it will result in an increase in side friction with a decrease in effective pressure and consolidation.

14.1.8 Place the loading plate on the top porous plate and ensure that the loading plate, top porous plate, and gauge block are in correct alignment and centered in the specimen ring.

14.1.9 Place the consolidometer with gauge block on the pneumatic load frame. Center the consolidometer under the piston head. Ensure that the dial gauge stem is centered on the dial gauge spindle rest. Figure 10 shows the one-dimensional consolidation apparatus assembled in a pneumatic load frame and ready for obtaining a seating pressure reading on a gauge block.

CAUTION.–If necessary, spacer plates should be placed under the consolidometer during testing to ensure that the pneumatic cylinder rod is extended approximately the same distance as it was when the pneumatic load frame was calibrated.

14.1.10 Cover the loading plate and specimen ring with plastic wrap. Secure the plastic wrap with a rubberband around the groove in the specimen ring.

14.1.11 Record the desired gauge block seating pressure in column 3, *Desired pressure* as shown on data

7-2418 (3-89) Bureau of Reclamation	ONE-DIMENSIONAL CONSOLIDATION TEST (DATA SHEET 2)	Designation USBR 5700 -89

Tested By	Date	Computed By	Date	Checked By	Date

Sample No. 1	Specimen No. 51
Load Frame No. 106	Specimen Ring No. 208

Type of Test: [X] Consolidation [ ] Expansion [ ] Uplift

DATE	TIME sec.	DESIRED PRESSURE [X] lbf/in² [ ] kPa	[ ] MASS REQ. [X] DEFORMATION CORRECTION [X] lbm [ ] N	PLF GAUGE NO.	PLF GAUGE READING	DIAL/LVDT GAUGE READING 1/ [X] in [ ] cm	HEIGHT OF SPECIMEN [X] in [ ] cm	AXIAL STRAIN %	VOID RATIO
(1)	(2)	(3)	(4)	(5)	(6)	(7)	(8)	(9)	(10)
5/19/89	4	1	0.000	1	0.64	0.2517	1.2422	0.00	0.4328
	4	6*				0.2518	1.2421	0.01	0.4326
	10					0.2518	1.2421	0.01	0.4326
	20					0.2518	1.2421	0.01	0.4326
	40					0.2518	1.2421	0.01	0.4326
	80					0.2518	1.2421	0.01	0.4326
	200					0.2518	1.2421	0.01	0.4326
	400					0.2518	1.2421	0.01	0.4326
	800					0.2518	1.2421	0.01	0.4326
	2000					0.2519	1.2420	0.02	0.4325
	4000					0.2519	1.2420	0.02	0.4325
	8000					0.2519	1.2420	0.02	0.4325
	20000					0.2519	1.2420	0.02	0.4325
5/20	86400					0.2519	1.2420	0.02	0.4325
	4	12.5	0.002		2.0	0.2520	1.2419	0.02	0.4325
	10					0.2522	1.2417	0.04	0.4322
	20					0.2524	1.2415	0.06	0.4317
	40					0.2526	1.2413	0.07	0.4317
	80					0.2528	1.2411	0.09	0.4315
	200					0.2530	1.2409	0.10	0.4313
	400					0.2534	1.2405	0.14	0.4308
	800					0.2538	1.2401	0.17	0.4303
	2000					0.2542	1.2397	0.20	0.4299
	4000					0.2546	1.2393	0.23	0.4294
	8000					0.2548	1.2391	0.25	0.4292
	20000					0.2549	1.2390	0.26	0.4291
5/21	86400					0.2550	1.2389	0.27	0.4290
	4	25	0.003		3.7	0.2588	1.2351	0.57	0.4246

* Indicates when specimen was wetted

1/ Adjusted for deformation correction

Sheet 1 of 7

Figure 9. – One-dimensional consoldiation test (data sheet 2) — example. (Only partial consolidation test data are shown.)

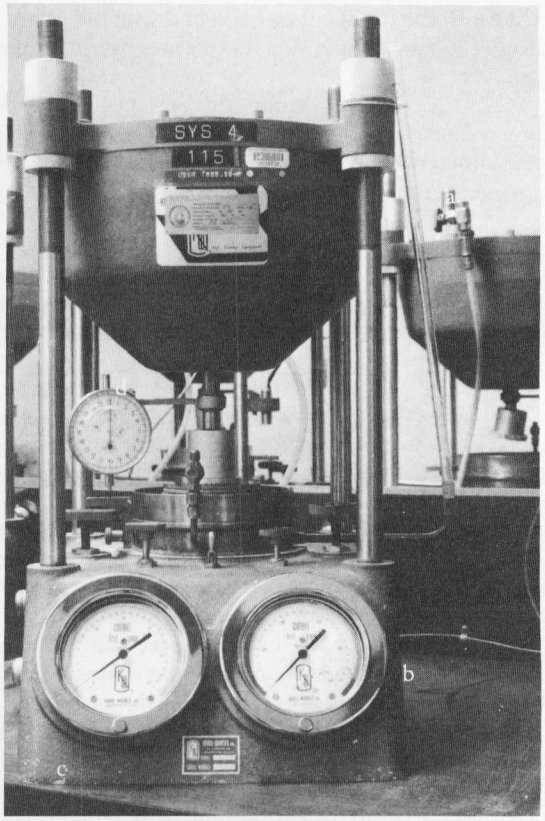

Figure 10. – One-dimensional consolidation test assembly. (a) saturation tube, (b) low range pressure gauge, (c) high range pressure gauge, (d) dial gauge.

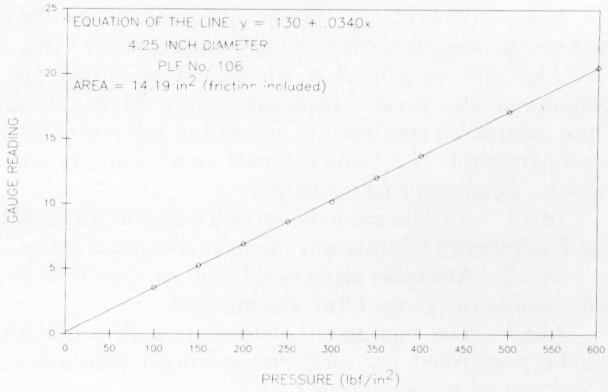

Figure 11. – Pneumatic load frame calibration (high range) — example.

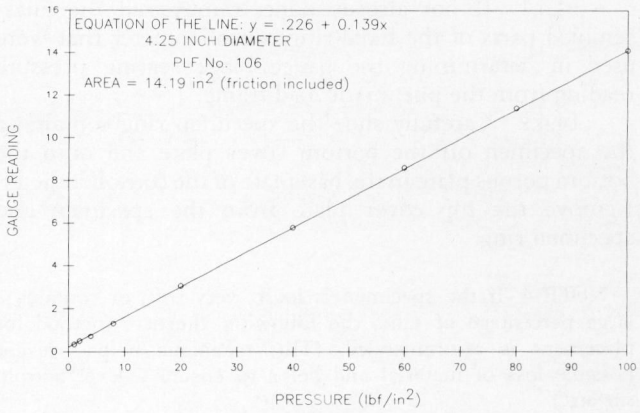

Figure 12. – Pneumatic load frame calibration (low range) — example.

sheet 2 (fig. 9). If gauge block seating pressure is not stated, use 1 lbf/in^2.

14.1.12 Using the pneumatic load frame calibration plot (fig. 11 or 12) for the correct diameter specimen, obtain the pressure gauge reading necessary to exert the required gauge block seating pressure. Record this pressure reaching in column 6, "PLF GAUGE READING" as shown on data sheet 2 (fig. 9).

NOTE 3.–Ensure that the pneumatic load frame is set to the low range pressure gauge, with the load switch up and the low range pressure gauge at zero.

14.1.13 Pull down the load switch (figs. 2 and 3).

14.1.14 Set the low range pressure gauge to the necessary reading by turning the low range air control clockwise.

14.1.15 Position the consolidometer as necessary to ensure that the piston head will be centered on the loading plate, and the dial gauge will be centered on the dial gauge spindle rest, move the load switch to the up position.

14.1.16 Record the dial gauge reading as the *Dial reading with seating pressure on gauge block* on line 9 of data sheet 1 (fig. 7).

14.1.17 Remove the rubberband from the specimen ring groove and use it to secure the plastic wrap about the piston head.

14.1.18 Raise the piston head by turning the low range air control counterclockwise until the low range pressure gauge reads zero.

14.1.19 Disassemble the consolidometer by removing the loading plate, guide ring, and upper porous plate. Remove the clamping ring with water collar, specimen ring, and gauge block from the consolidometer baseplate. Leave the lower porous plate in the baseplate of the consolidometer and place consolidometer parts on the pneumatic load frame.

14.1.20 Determine the mass of the specimen ring and a pair of cover plates to the nearest 0.1 gram. Record the mass as the *Mass of specimen ring + cover plates* on line 20 of data sheet 1 (fig. 7).

14.1.21 Prepare the test specimen as described in paragraph 11, and immediately cover the top and bottom of the specimen ring and specimen with the cover plates if not already done so in preparing the specimen.

14.2 *Preparing Data Sheets*:

14.2.1 Determine the mass of the specimen ring, wet soil, and the pair of cover plates to the nearest 0.1 gram. Record the value as the *Mass of specimen ring + cover plates + wet soil*, on line 21 of data sheet 1 (fig. 7).

14.2.2 Calculate the *Mass of wet soil* and record on line 22 of data sheet 1 (fig. 7).

14.2.3 If necessary, calculate and record on line 27 the *Dry unit weight* of the specimen on data sheet 1 (fig. 7). The *Dry unit weight* of a compacted specimen has a tolerance of ±0.5 percent from the desired dry unit weight. If the compacted specimen is not within tolerance, return to subparagraph 11.2.1 and compact another specimen.

14.3 *Equipment Deformation*:

14.3.1 All data are to be recorded on the "Consolidation Equipment Deformation" form as shown on figure 13.

14.3.2 Assemble all consolidation equipment used in determining the gauge block seating load.

14.3.3 The equipment deformation determination will be performed just prior to specimen placement in accordance with appendix X2.

14.3.4 As shown on figure 14, plot consolidation pressure versus deformation.

14.4 *Specimen Placement*:

14.4.1 If not already done, remove all the unassembled parts of the fixed-ring consolidometer that were used in determining the gauge block seating pressure reading from the pneumatic load frame.

14.4.2 Carefully slide the specimen ring containing the specimen off the bottom cover plate and onto the bottom porous plate in the baseplate of the consolidometer. Remove the top cover plate from the specimen and specimen ring.

NOTE 4.–If the specimen is loose, very soft, or contains a large percentage of sand, the following alternate method for placement is recommended. (This technique helps prevent possible loss of material and helps to ensure a level bottom surface.)

- With the cover plates securely in place, invert the specimen.
- Carefully remove the bottom cover plate, place the bottom porous plate on the specimen, invert the baseplate and place over the specimen ring.
- Hold the top cover plate in place and carefully turn the assembly right side up.
- Remove the top cover plate.

14.4.3 Place, center, and align the upper porous plate on top of the specimen with the smooth side facing the specimen.

14.4.4 Ensure that the gasket is not cracked and is flexible. Place the gasket on the baseplate, and secure the clamping ring with water collar to the baseplate. Ensure that the screws are tight to prevent waterflow between the baseplate and clamping ring.

14.4.5 Place the guide ring on top of the specimen ring.

14.4.6 Place and align a loading plate on top of the porous plate.

14.4.7 Cover the loading plate and specimen ring with the plastic wrap which was secured to the piston head in subparagraph 14.1.17. Hold the plastic wrap in place with a rubberband around the groove in the specimen ring.

14.4.8 Place the consolidometer baseplate with specimen, on the pneumatic load frame. If spacers were used beneath the baseplate, when obtaining the gauge block reading (refer to subpar. 14.1.9), center the baseplate on the spacers.

14.4.9 Center and align the top porous plate and loading plate over the specimen. Align and center the consolidometer beneath the piston head. Make sure the dial gauge spindle is centered on the dial gauge spindle rest.

CAUTION.–If the loading plate is not centered, it can slip sideways, when a load is applied, and catch on the guide ring during consolidation. This causes differential loading on the specimen.

14.4.10 Attach the saturation tube to the baseplate and cover the top of the tube with plastic wrap. This will help to keep the specimen from drying out prior to wetting.

14.5 *Pressure Sequence*:

14.5.1 Load and unload the specimen according to the desired pressure sequence outlined in the testing program. Common practice is for each new pressure to be twice the preceeding pressure.

14.5.2 An unload-reload sequence may be included in the pressure loading sequence. This is done to determine rebound and recompression characteristics of the soil.

14.5.3 The specimen is commonly unloaded back to the seating pressure by decreasing the previous pressure on the specimen by 75 percent. The unload sequence should be determined prior to testing and is dependent on how test results are to be used.

14.6 *Seating Pressure Application and Initial Height Determination*:

14.6.1 The first pressure on the specimen is the same as the gauge block seating pressure.

14.6.2 The correct gauge readings are determined—for a given pneumatic load frame and specimen ring diameter—from calibration plots of the high and low range pressure gauges for each pneumatic load frame (figs. 11 and 12).

14.6.3 The seating pressure is applied using the low range pressure gauge. Pull down the load switch and turn the low range air control clockwise until the low range pressure gauge is on the desired gauge reading.

14.6.4 Pull up the load switch until the piston head has come down to, but is not touching, the loading plate. Pull down the load switch to stop piston advance. Again, check that the specimen ring, top porous plate, and loading plate are centered under the piston head, and that the dial gauge is properly positioned.

14.6.5 Pull up the load switch and start the timer when the piston head seats firmly on the loading plate.

14.6.6 After 4 seconds, observe the dial gauge reading with seating pressure on the specimen. Record the reading as the *Dial gauge reading with seating pressure on specimen* on data sheet 1 (fig. 7). Also record this reading in column 7, *Dial/LVDT gauge reading* on data sheet 2 (fig. 9).

14.6.7 This pressure (with the specimen at natural moisture content) will be kept on the specimen for the required period of time according to the testing program.

7-2416 (3-89)
Bureau of Reclamation

CONSOLIDATION EQUIPMENT DEFORMATION

Designation USBR 5700 - 89

Performed By | Date | Checked By | Date

Porous Plate Diameter 4.25 [X] in [ ] mm | Specimen Height 1.25 [X] in [ ] mm | Consolidation Set No. 6

END PLATE MATERIAL

- [X] Sintered Bronze
- [ ] Carborundum
- [ ] Ceramic
- [ ] Other _____

LOADING UNIT

TYPE | NO.

- [ ] Compression _____
- [X] Pneumatic Load Frame 106
- [ ] Scale _____

MEASUREMENT DEVICE

- [X] LVDT
- [ ] Dial Gauge

Maximum axial strain due to equipment deflection is less than 2.0%? [X] Yes [ ] No

End porous plates stressed to maximum pressure prior to running deflection? [X] Yes [ ] No

PRESSURE [X] lbf/in^2 [ ] kPa	PRESSURE GAUGE READING OR SCALE LOAD	GAUGE USED H = High Range L = Low Range	MEASUREMENT DEVICE READING [X] in [ ] mm	DEFLECTION CORRECTION [X] in [ ] mm	AXIAL STRAIN (%)
(1)	(2)	(3)	(4)	(5)	(6)
1.0	0.36	L	0.1931	0.0000	0.0
12.5	1.96	L	0.1955	0.0024	0.2
25.0	3.70	L	0.1965	0.0034	0.3
50.0	7.17	L	0.1977	0.0046	0.4
100.0	14.11	L	0.1992	0.0061	0.5
200.0	6.95	H	0.2016	0.0085	0.7
400.0	13.76	H	0.2055	0.0124	1.0
600.0	20.55	H	0.2092	0.0161	1.3
400.0	13.76	H	0.2066	0.0135	1.1
100.0	14.30	L	0.1993	0.0062	0.5
50.0	7.31	L	0.1977	0.0046	0.4
12.5	2.07	L	0.1956	0.0025	0.2
1.0	0.46	L	0.1938	0.0007	0.1

Figure 13. - Consolidation equipment deformation — example.

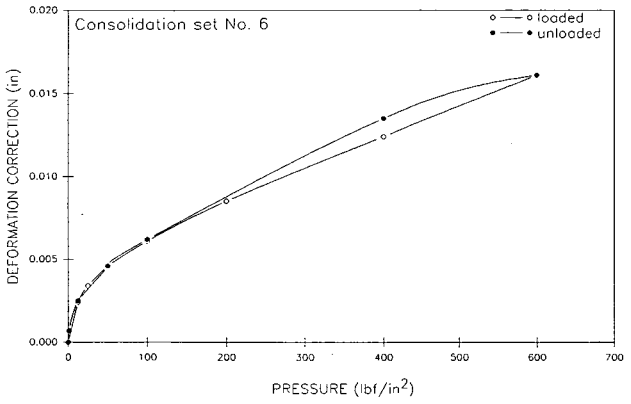

Figure 14. – Pressure versus equipment deformation correction — example.

Usually only a 4-second seating load reading is taken. If time limit is not specified, leave the seating pressure on the specimen for a period of 24 hours. Record dial gauge readings at time intervals specified in subparagraph 14.7.6.

14.6.8 Record the date, time, and desired seating pressure as shown in columns 1, 2, and 3 of data sheet 2 (fig. 9).

14.6.9 Record the equipment deformation in column 4 on data sheet 2 (fig. 9) from figure 13. The deformation correction should be zero.

14.6.10 Calculate the initial height of specimen, and the equivalent height of solids. Record the values on lines 11 and 12 on data sheet 1 (fig. 7).

14.6.11 Depending on the testing program, go to subparagraph 14.7 Specimen Loading, or if the specimen is to be wetted, proceed to subparagraph 14.8 Specimen Wetting.

14.7 *Specimen Loading* (dry specimen):

14.7.1 Record the *Desired pressure* from the testing program as shown in column 3 on data sheet 2 (fig. 9).

14.7.2 Determine the correct gauge reading for each desired pressure from the PLF (pneumatic load frame) calibration plots (shown on figs. 11 and 12) for the diameter of specimen being tested. If the desired pressure is too high for the low range calibration plot, use the high range calibration plot. Record the *PLF Gauge reading* and *PLF Gauge No.* in columns 5 and 6, respectively, on data sheet 2 (fig. 9). (This may already have been done for the gauge block seating pressure.)

14.7.3 Pull down the load switch to maintain a constant pressure on the specimen and to allow the next pressure to be applied instantly.

14.7.4 If the calculated pressure gauge value is from the low range calibration plot, and pressure is presently applied to the specimen using the low range pressure gauge, turn the low range air control clockwise until the low range pressure gauge needle is on the desired gauge reading.

14.7.5 If the calculated pressure gauge value is from the high range calibration plot, proceed as follows.

14.7.5.1 If the specimen is being loaded using the low range pressure gauge, turn the low range air control counterclockwise until the low range pressure gauge reads zero. Close the low range gauge shut-off, and pull out the range selector switch in the center back of the pneumatic load frame. If using the "gold knob" pneumatic load frames, open the high range gauge shut-off (presently the bleeder valve). Turn the high range air control clockwise until the desired high range pressure gauge reading is obtained.

14.7.5.2 If the specimen is presently being loaded using the high range pressure gauge, turn the high range air control clockwise to the desired high range pressure gauge reading.

14.7.6 Raise the load switch and start the timer. Read and record dial gauge readings at 4, 10, 20, 40, 80, 200, 400, 800, 2,000, 4,000, 8,000, 20,000, and 86,400 (24 hours) seconds from the start of timing.

14.7.7 Determine amount of deformation for the appropriate pressure from the consolidation equipment deformation form as shown on figure 13. Record this value in the deformation correction column (col. 4) as shown on data sheet 2 (fig. 9). If the deformation correction for the appropriate pressure cannot be found on figure 13 then obtain the value from the plot of consolidation pressures versus deformation (fig. 14).

NOTE 5.–If the loading sequence is changed during the one-dimensional consolidation test and the deformation cannot be obtained from the consolidation pressure versus deformation plot (on fig. 14) after the test is completed, a new equipment deformation versus added or changed consolidation pressure value(s) plot will need to be obtained.

14.7.8 Calculate and record in columns 8, 9, and 10 on data sheet 2 (fig. 9) the height of specimen, axial strain (percent), and void ratio, respectively, for each dial gauge reading. Plot specimen deformation in terms of axial strain (percent) or gauge reading (inches) versus the square root of time in minutes as shown on figure 15. Plot axial strain (percent) or gauge reading (inches) versus log time in seconds as shown on figure 16.

14.7.8.1 Primary consolidation is complete as indicated by the deformation versus square root of time curve flattening to a nearly horizontal position as shown on figure 15, and by the deformation versus log time where two straight portions of the curve are extended to intersect at 100 percent primary consolidation as shown on figure 16. When this occurs, loading under this pressure increment is complete unless otherwise stated in the testing program. One hundred percent primary consolidation may occur before 24 hours; if so, continue to the next load.

14.7.8.2 If 100 percent primary consolidation has not occurred after 24 hours, leave the specimen at the same pressure for another 24 hours and record the dial gauge reading at 48 hours on data sheet 2 (fig. 9). Add this data point to the plot generated in subparagraph 14.7.8. Repeat subparagraph 14.7.8 as necessary.

NOTE 6.–Generally, it is preferable that the duration of all pressure increments be the same.

NOTE 7.–Silt and organic soils often exhibit a significant amount of secondary consolidation and the deformation versus square root of time curve tends not to flatten out. Ordinarily,

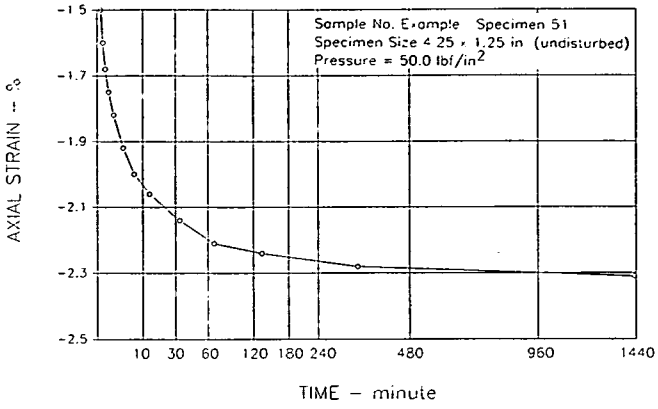

Figure 15. - Axial strain versus square root of time — example.

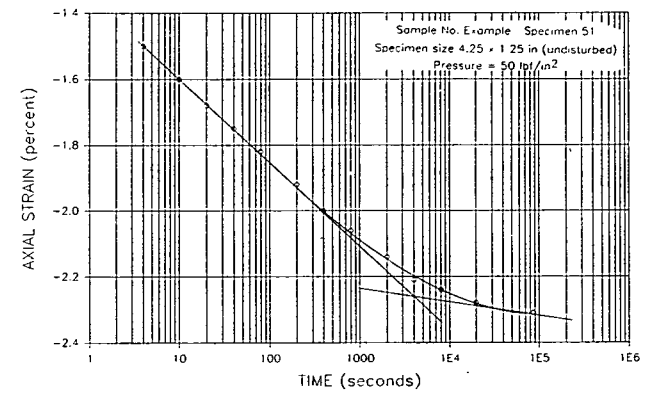

Figure 16. - Axial strain versus log-time — example.

care should be taken to limit secondary consolidation. However, secondary consolidation is critical to the design of structures on some soils and if needed, results should be carefully interpreted.

14.7.9 Calculate the coefficient of consolidation and axial strain at 100 percent of primary consolidation as specified in appendix X1 and record on figures 15 and 16.

14.7.10 Proceed in accordance with the testing program; go to subparagraph 14.7 Specimen Loading, to 14.8 Specimen Wetting, to 14.9 Rebound Upon Unloading, or to 14.10 Specimen Removal, as appropriate.

14.8 *Specimen Wetting:*

14.8.1 The specimen should be wetted according to instructions in the testing program. Testing should be performed to closely model the in-place field condition by wetting the specimen at a pressure dictated by design or field construction practices. If water is to be added at the same pressure as the seating pressure then begin to add water immediately after the 4 second seating pressure is obtained.

14.8.2 Record the desired pressure, PLF gauge No., and PLF gauge reading in columns 3, 5, and 6, respectively, on data sheet 2 (fig. 9). Add an * next to this reading to denote the pressure at which the specimen was wetted.

14.8.3 Remove the plastic wrap from around the specimen ring and from the saturation tube. Fasten the plastic wrap around the piston head so as not to change the dial gauge reading.

14.8.4 Attach flexible tubing to the drain cock (fig. 1) to allow water to flow into an overflow container.

14.8.5 Open the drain cock valve, and add tapwater (at room temperature) to the saturation tube using a pipette and bulb. Continue to add water until no air bubbles appear to be exiting through the drain cock.

14.8.6 Close the drain cock and remove the plastic tubing from the drain cock.

14.8.7 Keep the height of the water in the saturation tube low to prevent piping in the specimen, but keep the height at least level with the top of the drain cock to prevent possible air bubbles being trapped in the consolidometer.

14.8.8 Continue to add water as necessary to maintain the desired height. When water begins to come through the top porous plate or after three minutes, whichever comes first, submerge the specimen by filling the water collar to just below the rim with room temperature tapwater. Ensure that the specimen remains submerged.

14.8.9 After the specimen has been completely submerged, begin the timer. If during the wetting procedure the soil begins to consolidate as indicated by a changing dial gauge reading, begin the timer and take readings as given in subparagraph 14.8.10.

CAUTION.-Some soils will collapse or expand rapidly upon introduction of water. At no time should the specimen be allowed to expand above initial height unless specifically written in the testing program.

14.8.9.1 If, while adding water, the specimen begins to expand above initial specimen height, record a 4-second dial gauge reading. Increase the pressure on the specimen to the next pressure as given in the loading pressure sequence, and record a 4-second dial gauge reading. Repeat as necessary to maintain the specimen at or below initial specimen height and continue taking readings as necessary.

14.8.9.2 When the specimen is at or below initial height continue to add water.

14.8.9.3 If while adding water the specimen begins to consolidate, immediately begin recording dial gauge readings as noted in subparagraph 14.8.10 and continue adding water.

14.8.10 Record dial gauge readings in column 7 on data sheet 2, (fig. 9) at 4, 10, 20, 40, 80, 200, 400, 800, 2,000, 8,000, 20,000, and 86,400 seconds (24 hours) from the start of timing.

14.8.11 Determine the completion of primary consolidation in accordance with subparagraph 14.7.8.1.

14.9 *Rebound Upon Unloading*:

14.9.1 The specimen is unloaded either at the end of the pressure sequence, or during the pressure sequence to gather data for determining the preconsolidation pressure, or to model construction conditions in the field.

14.9.2 Record the *Desired pressure* from the testing program in column 3 on data sheet 2 (fig. 9).

14.9.3 Determine the correct pressure gauge reading for the *Desired pressure* from the pneumatic load frame calibration plots for the diameter of the specimen being tested as shown on figure 11 or 12.

14.9.4 If the specimen is presently being loaded using the low range pressure gauge, pull down the load switch and turn the low range air control counterclockwise to obtain the desired gauge value. Lift up on the load switch and record dial gauge readings in column 7 on data sheet 2 (fig. 9) at 4, 10, 20, 40, 80, 200, 400, 800, 2,000, 4,000, 8,000, 20,000, 86,400 (24 hours) seconds from the start of timing.

14.9.5 If pressure is presently being applied using the high range pressure gauge, proceed as follows.

14.9.5.1 If the low range calibration plot with the low range pressure gauge is to be used:

14.9.5.1.1 Pull down the load switch, and turn the high range air control knob counterclockwise. If using the "gold knob" pneumatic load frames, turn the high range gauge shut-off (previously the bleeder valve) clockwise fully closed.

14.9.5.1.2 Push in the range selector switch at the back of the base of the pneumatic load frame and open the low range gauge shut-off counterclockwise.

14.9.5.1.3 Adjust the low range air control until the low range pressure gauge shows the correct value. When pulling up on the load switch, be careful to lift slowly so as not to damage the gauges.

14.9.5.2 If loading is to continue using the high range calibration plot while applying pressure, adjust the high range air control to obtain the correct high range pressure gauge value.

14.9.6 Pull up on the load switch and begin the timer. Record the date, time, and dial gauge readings in columns 1,2, and 7, respectively, on data sheet 2 (fig. 9). Begin recording readings in the sequence of 4, 10, 20, 40, 80, 200, 400, 800, 2,000, 4,000, 8,000, 20,000, and 86,400 seconds (24 hours) from the start of timing.

14.9.7 Determine the equipment deformation for the appropriate pressure from the consolidation equipment deformation form as shown on figure 13. Record the value of *Deformation correction* in column 4 on data sheet 2 (fig. 9). If the equipment deformation for the appropriate pressure cannot be found on figure 13, then obtain the correct value from the plot of consolidation pressure versus deformation on figure 14.

14.9.8 Calculate and record in columns 8, 9, and 10 the height of specimen, axial strain in (percent), and void ratio, respectively, for each dial gauge reading.

14.9.9 Plot axial strain versus square root of time as shown on figure 17.

14.9.9.1 Proceed to subparagraph 14.9.11 if the curve has leveled off or after 24-hours—whichever occurs first. In most cases rebound occurs quickly.

CAUTION.-The 24-hour limit is placed on the rebound upon unloading sequence so as to not mistake expansion for rebound. While the final rebound pressure is applied, usually the seating pressure, it may be necessary to leave the load on the specimen longer than 24 hours if duplication of field conditions is required.

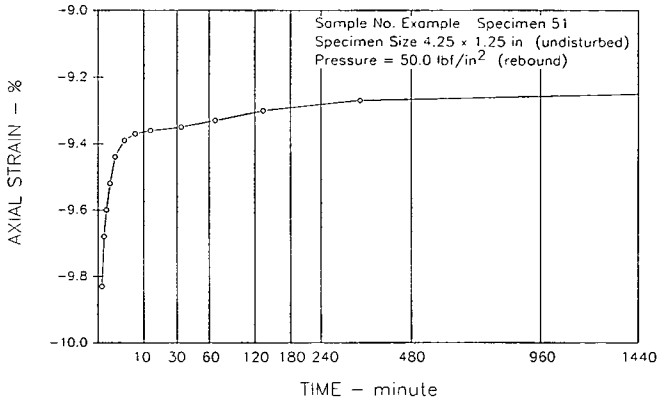

Figure 17. - Axial strain versus square root of time for specimen rebound upon unloading — example.

14.9.10 In accordance with the testing program; go to subparagraph 14.7 Specimen Loading, to 14.8 Specimen Wetting, to 14.9 Rebound Upon Unloading, or to 14.10 Specimen Removal, as appropriate.

14.10 *Specimen Removal*:

14.10.1 Ensure that the last required pressure increment or decrement has been applied to the specimen for an adequate length of time to allow complete primary consolidation or rebound, accordingly, before continuing.

14.10.2 Drain all standing water from the water collar using a suction bulb, be careful not to remove any fines which may have escaped around the top porous plate.

14.10.3 Remove the saturation tube from the consolidometer baseplate.

14.10.4 Ensure that the high range air control is adjusted counterclockwise until the high range pressure gauge reads zero. Turn the low range air control counterclockwise until the low range pressure gauge reads zero and the piston head is lifted off of the loading plate.

14.10.5 Carefully raise the dial gauge spindle and remove the consolidometer from the pneumatic load frame. Slowly lower the dial gauge spindle so as not to damage the gauge.

14.10.6 Remove the screws from the clamping ring and quickly remove, in the following order: loading plate, guide ring, clamping ring with water collar, gasket, and specimen ring with top porous plate and bottom porous plate from the baseplate.

14.10.7 Remove the porous plates from the specimen and drain any free water into a drying pan whose mass was previously determined and recorded on line 29 on data sheet 1 (back of form).

14.10.8 Place the loading plate on top of the specimen and press the specimen out of the specimen ring into another drying pan whose mass was predetermined also and recorded on line 14 on data sheet 1 (fig. 7).

14.10.9 Determine and record the wet mass of the specimen plus drying pan to the nearest 0.1 gram as shown on line 15, data sheet 1 (fig. 7).

14.10.10 Photograph the top of the specimen as shown on figure 18a. Break the specimen into halves and photograph the broken faces of the specimen as shown on figure 18b. Return all specimen pieces to the drying

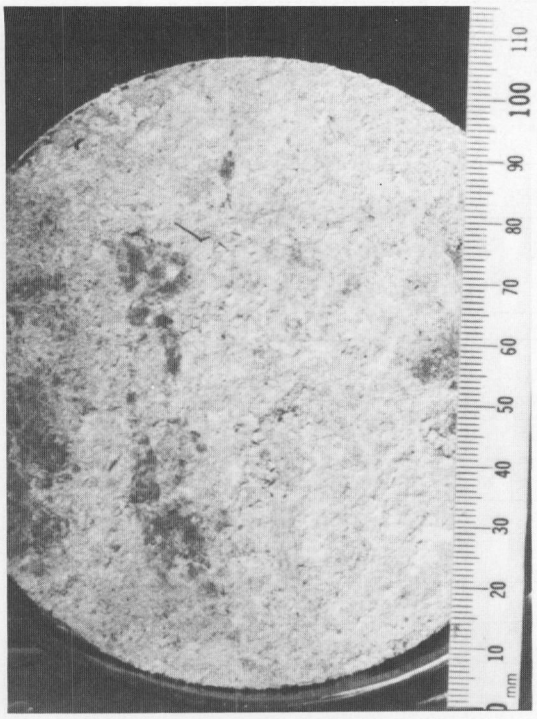

(a) Top view of test specimen.

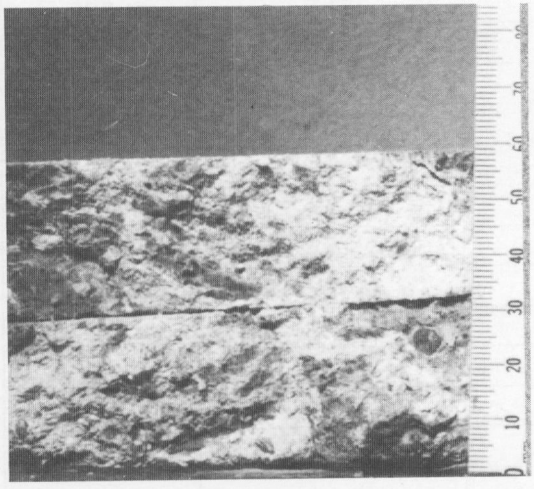

(b) Edge view of test specimen.

Figure 18. – Views of test specimen.

pan and determine the final moisture content of the entire specimen in accordance with USBR 5300 and record the calculations on data sheet 1 (back of form).

CAUTION.–An inaccurate final moisture content may result if the specimen is not removed from the specimen ring and its wet mass determined as quickly as possible after removing all pressure from the specimen.

14.10.11 Wash any soil from the porous plates, specimen ring, and guide ring, using a squeeze bottle filled with tapwater. Catch the wash water in the drying pan used in subparagraph 14.10.7.

14.10.12 Place the drying pan in a separate (if possible) drying oven overnight. (Evaporation of the large amount of free water in the washings may result in inaccurate final moisture contents if the washings are placed in the same oven as the specimen.) Determine and record the dry mass of the washings and the drying pan to the nearest 0.1 gram. Determine and record the mass of dry washings on line 31 data sheet 1.

14.10.13 Scrub the porous plates in running water using a soft nylon brush. Unless the porous plates are cleaned after each test, they become clogged with soil particles and slow the flow of water to or from the specimen.

14.10.14 Determine the final dry mass of soil and record the values as shown on line 34, data sheet 1.

14.10.15 Calculate dry unit weight, Degree of Saturation, and the maximum vertical expansion (percent rebound) of the specimen using the final dial gauge reading, and record equivalent heights of solids as shown on the "Summary of One-Dimensional Consolidation Test" form (fig. 19).

14.10.16 Using the final dial gauge reading for each pressure increment, record and/or calculate pressure, specimen height, void ratio, dry unit weight, and axial strain as shown on figure 19.

14.10.17 Plot axial strain (percent) versus log time for each reading as shown on figure 20.

14.10.18 Plot axial strain (percent) versus pressure for the final reading of each pressure increment or decrement. Also plot void ratio versus log of pressure for the final reading of each pressure increment or decrement as shown on figure 21.

14.11 *Determination of Permeability Coefficient*:

14.11.1 This portion of the procedure is only performed when specifically specified and usually follows primary consolidation of the saturated specimen at a given pressure.

14.11.2 Determine the height and area of the specimen at the beginning of the permeability test and enter these values as L and A, respectively, on the "Constant Head Permeability Test (One-Dimensional Consolidation)" data sheet as shown on figure 22. Calculate and record the head loss or drop H which is equal to the specified gradient times the height (thickness) of specimen as shown on figure 22.

14.11.3 Record the head tank calibration factor F from the head tank calibration form. Calculate and record the constant C as shown on figure 22.

14.11.4 If not already done, remove the saturation tube from the specimen baseplate (fig. 1).

14.11.5 Remove the stopper and fill the glass head tank with water at room temperature. Replace the stopper; make sure it is secure and there is no air leak (fig. 6).

14.11.6 Slightly open both clamps (top and bottom) on the plastic tube from the glass head tank, until water flows from the tube.

7-2419 (3-89) Bureau of Reclamation	SUMMARY OF ONE-DIMENSIONAL CONSOLIDATION TEST	Designation USBR 5700 - 89
Project Example	Feature Example	
Sample No. 1	Specimen 51	
Type of Test ☒ Consolidation ☐ Expansion ☐ Uplift		

PRESSURE ☒ lbf/in² ☐ kPa	SPECIMEN HEIGHT ☒ in ☐ mm	VOID RATIO	DRY UNIT WEIGHT ☒ lbf/ft³ ☐ kN/m³	AXIAL STRAIN ⊙ (%)
(1)	(2)	(3)	(4)	(5)
1.00	1.2422	0.4328	116.9	0.00
6.00	1.2420	0.4325	116.9	0.02
12.50	1.2389	0.4290	117.2	0.27
25.00	1.2295	0.4181	118.1	1.02
50.00	1.2135	0.3997	119.6	2.31
100.00	1.1904	0.3730	121.9	4.17
200.00	1.1598	0.3377	125.2	6.63
400.00	1.1290	0.3022	128.6	9.11
600.00	1.1102	0.2805	130.7	10.63
400.00	1.1124	0.2830	130.5	10.45
100.00	1.1241	0.2965	129.1	9.51
50.00	1.1278	0.3008	128.7	9.21
12.50	1.1385	0.3131	127.5	8.35
1.00	1.1551	0.3323	125.7	7.01

TEST SPECIMEN CONDITIONS	INITIAL	MAX. PRESSURE	FINAL
Dry Unit Weight ☒ lbf/ft³ ☐ kN/m³	116.9	130.7	——
Moisture Content %	13.2	11.2	15.3
Degree of Saturation %	77.9	100.4	——
Dry Mass ☐ lbf ☒ g	540.9	——	534.2

Maximum Vertical Expansion —— %		Rebound	34 %
Pressure Required to Return to Initial Height	N/A ☐ lbf/in² ☐ kPa	Equivalent Height of Solids	0.867 ☒ in ☐ mm

Figure 19. – Summary of one-dimensional consolidation test — example.

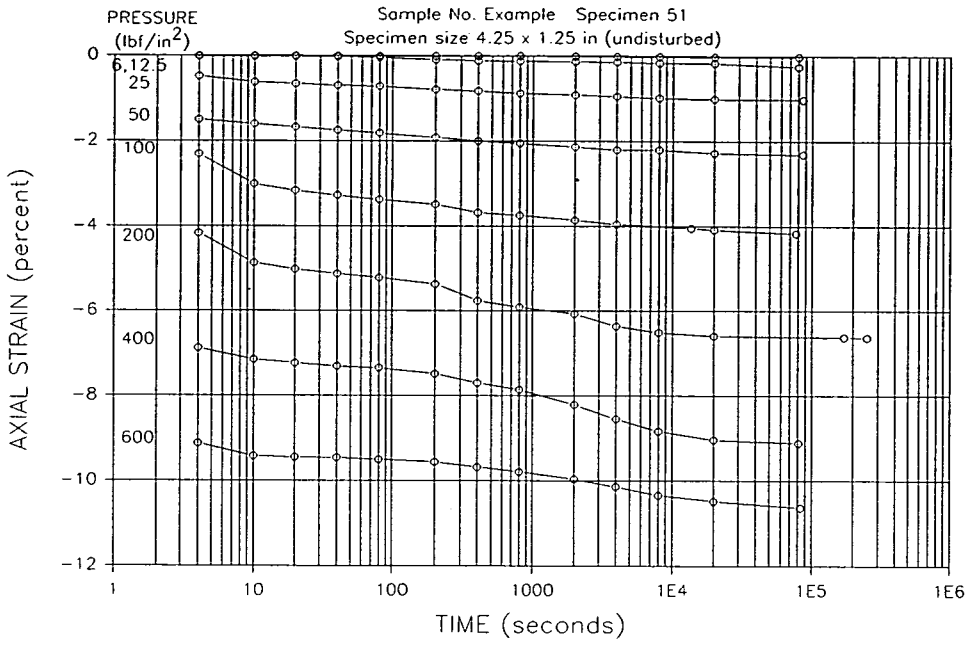

Figure 20. – Axial strain versus log-time summary — example.

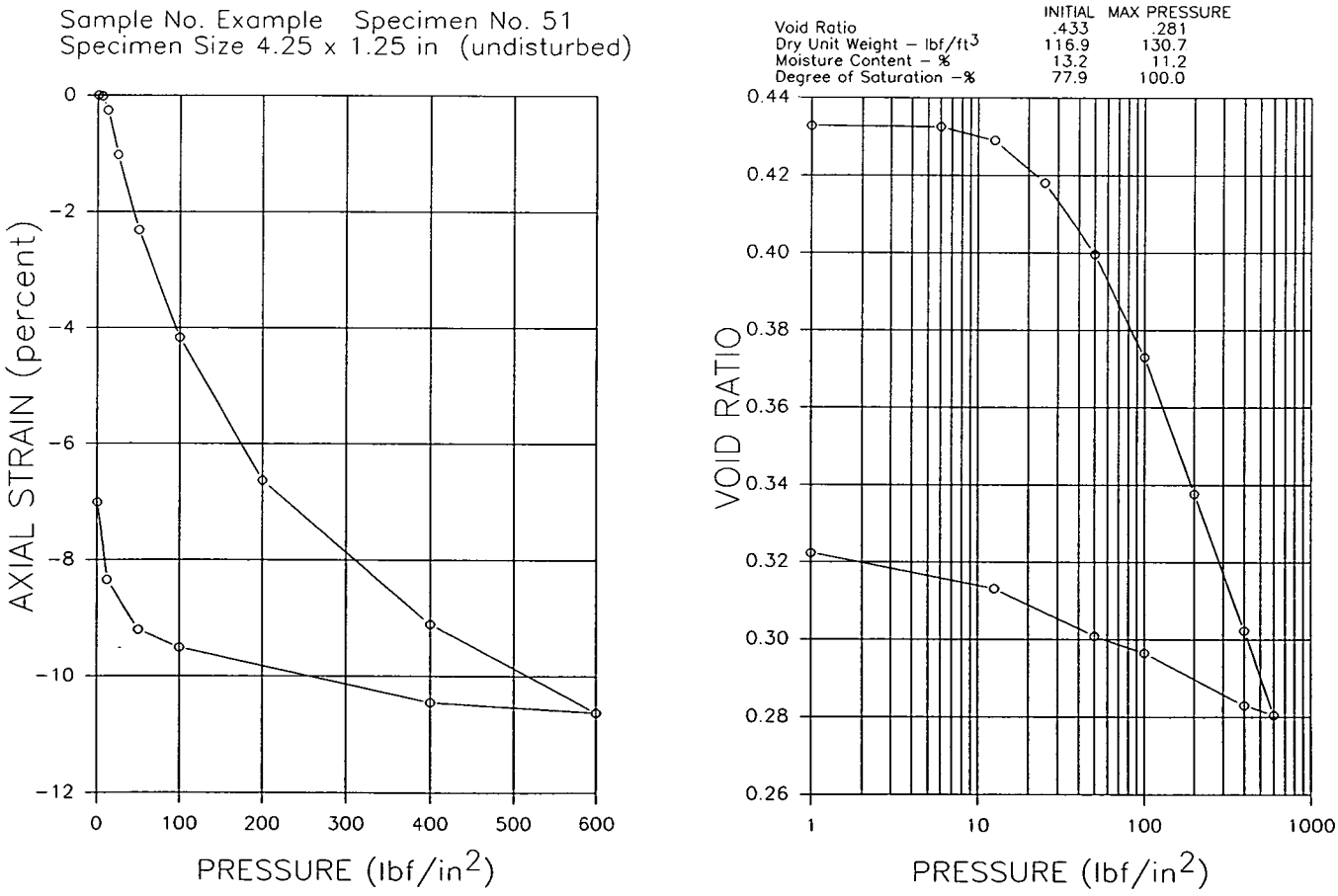

(a) Axial strain versus pressure.

(b) Void ratio versus log of pressure.

Figure 21. – One-dimensional consolidation test summary — example.

7-2421 (3-89)
Bureau of Reclamation

CONSTANT HEAD PERMEABILITY TEST (ONE DIMENSIONAL CONSOLIDATION)

Designation USBR 5700 - 89

Project	Feature
Example	Example

Tested By	Date	Computed By	Date	Checked By	Date

Sample No.	Specimen No.
1	1

BASIC EQUATIONS

From Darcy's Law: $q = kiA$

where
- q = The volume of flow, V, during time, t, or q = V/t
- k = A constant of proportionality called the coefficient of permeability
- i = The hydraulic gradient, which is the total head between two reference points (H) divided by the length of flow path between the two points (L) of i = H/L
- A = Cross-sectional area of flow

All the values except k can be measured. Therefore, k is determined form the other values.

$k = VL/AtH = (V/t)c$

CONSTANT TEST VALUES

L = Specimen thickness =	3.05	☐ in	☒ cm
H = Difference between headwater and tailwater =	105.5	☐ in	☒ cm
A = Area of specimen =	91.5	☐ in^2	☒ cm^2
C = Constant relating L, A, and H = L/AH =	0.000316	☐ $1/in^2$	☒ $1/cm^2$
F = Factor relating water level changes to volume =	23.5	☐ cm^3/cm	☒ cm^3/in

INITIAL TEST VALUES

t_1 = Time at start of test (HR:MIN) =	9:00	☒ am	☐ pm
h_1 = Head tank water level at t_1 =	5.36	☐ in	☒ cm

MEASURED VALUES

TIME OF NEXT READING t_2 (HR:MIN)	ELAPSED TIME 1/ $t=t_2-t_1$ (SEC)	HEAD TANK WATER LEVEL h_2 ☒ CM ☐ IN	CHANGE IN HEAD TANK WATER LEVEL $h=h_2-h_1$ ☒ CM ☐ IN	VOLUME OF FLOW $V=hF$ ☒ CM^4/CM ☐ CM^4/IN	COEFFICIENT OF PERMEABILITY 2/ 3/ $k=(VC)/t$ ☒ CM/SEC ☐ FT/YR	Remarks:
(1)	(2)	(3)	(4)	(5)	(6)	
9:00AM	0	5.36	0	0	0	
9:01	60	5.40	0.04	0.94	4.95×10^{-6}	
9:05	300	5.57	0.21	4.94	5.20×10^{-6}	
9:10	600	5.76	0.40	9.40	4.95×10^{-6}	
9:15	900	5.98	0.62	14.57	5.12×10^{-6}	
9:30	1800	6.56	1.20	28.20	4.95×10^{-6}	
10:00	3600	7.74	2.38	55.93	4.91×10^{-6}	
11:00	7200	10.11	4.75	111.63	4.90×10^{-6}	
2:00PM	18000	17.19	11.83	278.01	4.88×10^{-6}	Test complete

1/ For metric units, calculate t in seconds. For english units, calculate in years.
2/ To convert $cm^4/in^3 sec$ to ft/yr, multiply by 1.0946×10^8
3/ To convert from cm/sec to ft/yr, multiply by 1.0354×10^6

Figure 22. – Constant head permeability test (one-dimensional consolidation) — example.

14.11.7 Use a hose clamp to fasten the end of the tubing to the consolidometer specimen baseplate in place of the saturation tube (fig. 1).

14.11.8 Close the top clamp on the plastic tubing. Check that air is not trapped between the specimen baseplate and the bottom clamp on the tubing.

14.11.9 Close the bottom clamp on the plastic tubing.

14.11.10 Open the top clamp on the plastic tubing. Release water from the side tubing while working any visible air bubbles out of the tubing. Continue until bubbles come from the end of the small glass tube inside the glass head tank and no visible air bubbles remain in the plastic tubing.

14.11.11 Check that the glass head tank is still at least two-thirds full of water and that the meniscus in the small inner tube is within 0.25 inch (6 mm) from the bottom of the tube.

14.11.12 Use modeling clay to raise the height of the water collar about 2 inches (50 mm).

14.11.13 Lead a piece of plastic tubing through the modeling clay and into an overflow container. This allows excess water being used for the permeability test to drain.

CAUTION.–Do not allow the water level in the water collar to drop below the level of the top porous plate or the top of the specimen may become dry.

14.11.14 Enter the initial height of water in the head tank h_1 shown on figure 22.

14.11.15 Enter the time t_1 to the nearest minute on the form (fig. 22); then open the bottom clamp on the head tank tubing and begin timing. Allow water to flow from the head tank up through the bottom porous plate and through the specimen.

CAUTION.–Soil appearing on the guide ring indicates the specimen may be "piping." Further consolidation or permeability data may be unreliable.

14.11.16 Record the height of water in the head tank h_2 to the nearest 1 mm and the time of the reading to the nearest minute as shown on figure 22. Readings should be recorded at one minute intervals as soon as the bottom clamp is opened and the water level starts dropping in the head tank. If there is less than 10 centimeters change in the height of water in the head tank during the first 5 minutes, take readings at 5, 15, and 30 minutes and at 1, 2, 5, and 25 hours from the time the bottom clamp is opened.

NOTE 8.–The time intervals were derived from customary practice.

14.11.17 Stop the test when water in the head tank is near the bottom of the inner small glass tube or after 24 hours, unless otherwise specified in the testing program.

NOTE 9.–Very permeable soils may empty a standard head tank within 30 minutes.

14.11.18 Calculate and record the volume of flow and the coefficient of permeability for each reading as shown on figure 22. The test should continue until a relatively constant coefficient of permeability is reached or ten readings are recorded, whichever comes first.

15. Calculations

15.1 Calculate *Specimen ring area* (nominal specimen area).

$$A = \frac{\pi D^2}{4} \quad (1)$$

where:

A = nominal specimen ring area, in^2
D = specimen ring inside diameter, in
π = 3.14

15.2 Calculate *Initial moisture content* as shown on line 24 of figure 7 (data sheet 1).

15.3 Calculate *Mass of wet soil.*

$$m_w = m_x - m_y \quad (2)$$

where:

m_w = mass of wet soil, g
m_x = mass of specimen ring, cover plates, and wet soil, g
m_y = mass of specimen ring and cover plates, g

15.4 Calculate height(s) of specimen.

15.4.1 *Initial specimen height* as shown on line 11 of figure 7 (data sheet 1):

$$H_i = H_{gb} - R_{gb} + R_i \quad (3)$$

where:

H_i = initial specimen height, in
H_{gb} = height of gauge block, in
R_{gb} = dial gauge reading on the gauge block, in
R_i = initial dial reading on the soil specimen, in

15.4.2 Determinations of all other heights as shown in column 8 of figure 9 (data sheet 2):

$$H = H_i - R_i + R_2 - \Delta_d \quad (4)$$

where:

H = specimen height, in
H_i = initial specimen height, in
R_i = initial dial gauge reading on the specimen, in
R_2 = current dial gauge reading, in
Δ_d = deformation correction, in

15.5 Calculate initial dry mass of specimen.

$$m_d = \frac{m_w}{1 + w} \quad (5)$$

where:

m_d = initial dry mass of specimen, g
m_w = wet mass of specimen, g
w = initial moisture content expressed as a decimal

15.6 Calculate *Equivalent height of solids* in the specimen on line 12 of figure 7 (data sheet 1) and on figure 19 (summary of one-dimensional consolidation test).

$$H_s = C \left(\frac{m_d}{A\, G_s\, \rho_w} \right) \quad (6)$$

where:
H_s = equivalent height of solids in the specimen, in
m_d = initial dry mass of specimen, g
A = specimen area, in²
G_s = specific gravity of soil solids
ρ_w = density of water = 62.29 lbm/ft³ at 71.5 °F
C = 3.809 changes ft³ to in³ and g to lbm

15.7 Calculate *Axial strain* (percent) in column 9 of figure 9 (data sheet 2).

$$\epsilon = 100 \left(1 - \frac{H}{H_i}\right) \quad (7)$$

where:
ϵ = axial strain, %
H_i = initial specimen height, in
H = height of the specimen at any reading, in
100 = convert from decimal to percent

15.8 Calculate *Void ratio* in column 10 of figure 9 (data sheet 2).

$$e = \frac{H}{H_s} - 1 \quad (8)$$

where:
e = void ratio
H = height of specimen at any reading, in
H_s = equivalent height of solids in the specimen, in

15.9 Calculate *Dry unit weight* of the specimen at any reading in column 4 of figure 19 (summary of one-dimensional consolidation).

$$\rho_d = C \left(\frac{m_d}{HA}\right) \quad (9)$$

where:
ρ_d = dry density, lbm/ft²
m_d = initial dry mass of specimen, lbm
H = height of specimen at any reading, in
A = nominal specimen area, in²
C = 1,728 changes in³ to ft³

15.10 Calculate height of water in the specimen.

$$H_w = C \left(\frac{m_d\, w_c}{A\, \rho_w}\right) \quad (10)$$

where:
H_w = height of water in the specimen, in
m_d = initial dry mass of specimen, lbm
*w_c = moisture content expressed as a decimal
A = nominal specimen area, in²
ρ_w = density of water = 62.29 lbm/ft³ at 71.5 °F
C = 1,728 changes in³ to ft³

* Use initial moisture content w to calculate the height of water in the specimen prior to wetting, and final moisture content thereafter.

15.11 Calculate height of air in the specimen.

$$H_a = H - H_s - H_w \quad (11)$$

where:
H_a = height of air in the specimen, in
H = height of specimen at any reading, in
H_s = equivalent height of solids in the specimen, in
H_w = height of water in the specimen, in

15.12 If the height of air is less than zero, recalculate the height of water in the specimen.

$$H_w = H - H_s \quad (12)$$

where:
H_w = height of water in the specimen, in
H = height of specimen at any reading, in
H_s = equivalent height of solids in the specimen, in

15.12.1 Recalculate the moisture content.

$$w_c = 100 \left(\frac{A H_w\, \rho_w}{m_d\, C}\right) \quad (13)$$

where:
w_c = moisture content, percent
A = nominal specimen area, in²
H_w = height of water in the specimen, in
ρ_w = wet density of specimen, lbm/ft³
m_d = initial dry mass of specimen, lbm
C = 1,728 changes ft³ to in³
100 = convert from decimal to percent

15.13 Calculate *Rebound on* figure 19 (summary of one-dimensional consolidation test).

$$R = 100 \left(\frac{H_f - H_m}{H_i - H_m}\right) \quad (14)$$

where:
R = rebound, %
H_f = height of specimen at end of test, in
H_m = height of specimen at end of maximum pressure increment, in
H_i = initial specimen height, in
100 = convert from decimal to percent

15.13.1 Calculate the coefficient of consolidation c_v. Use the values derived from the table and graphical analysis in appendix X1 with the following equation:

$$c_v = C\left[\frac{T_v \left(\frac{H}{2}\right)^2}{t_v}\right] \quad (15)$$

where:
c_v = coefficient of consolidation, ft²/yr
T_v = time factor, from app. X1, table X1.1 (dimensionless)
H = length of maximum drainage path, in
t_v = time for degree of consolidation to occur, s
C = 2.19 × 10⁵ changes in²/s to ft²/yr

15.13.2 If using the axial strain versus log-time plot for graphical analysis:

$$c_v = C\left[\frac{T_{50} \left(\frac{H}{2}\right)^2}{t_{50}}\right] \quad (16)$$

where:

c_v = coefficient of consolidation, ft²/yr
T_{50} = 0.197, time factor at 50% of primary consolidation (dimensionless)
H = average height of specimen for pressure increment of interest, in
t_{50} = time at 50% of primary consolidation, s
C = 2.19×10^5 changes in²/s to ft²/yr

15.13.3 If using the axial strain versus square root of time plot for graphical analysis:

$$c^*_v = C\left[\frac{T_{90}\left(\frac{H}{2}\right)^2}{t_{90}}\right] \quad (17)$$

* Same as subparagraph 15.13.2 except $T_{90} = 0.848$ at 90 percent of primary consolidation and t_{90} is time in seconds also at 90 percent of primary consolidation.

16. Report

16.1 The report is to include the following completed and checked forms and plots, and photographs:

"One-Dimensional Consolidation Test" data sheets 1 and 2, figures 7 and 9, respectively.
"Summary of One-Dimensional Consolidation Test" form (fig. 19).
Plot of axial strain versus square root of time in minutes for each pressure increment (fig. 15 and 17).
Plot of dial reading or axial strain versus log time for a single pressure increment, including analysis of the coefficient of consolidation for that pressure (fig. 16).
Plot of axial strain (percent) versus log-time summary plot showing each pressure up to and including the maximum pressure (fig. 20).
Plot of axial strain versus pressure (fig. 21).
Plot of void ratio versus log of pressure (fig. 21).
Photographs of the consolidation specimen after testing and broken into halves after testing (fig. 18).

16.2 Optional information included in the report may be data showing calculation of the coefficient of permeability at a given load (fig. 22).

16.3 All calculations are to show a checkmark and all plotting must be checked.

17. Background Reference

Test Designation EM 1110-2-1906, app. VIII, *Consolidation Test*, U.S. Army Corps of Engineers, Vicksburg, Mississippi.

APPENDIX

X1. CALCULATION OF THE COEFFICIENT OF CONSOLIDATION BY GRAPHICAL ANALYSIS

X1.1 Scope

This appendix outlines the procedure for determining the coefficient of consolidation c_v for a pressure increment using either the log-time curve fitting method developed by A. Casagrande or the square root of time curve fitting method developed by D. W. Taylor. Both methods were originally developed based upon deformation in terms of dial gauge readings. The methods presented in this procedure have been modified to express deformation in terms of axial strain.

X1.2 Procedure

X1.2.1 *Log Method*:

X1.2.1.1 Plot axial strain (percent) versus log of time, in seconds, for the pressure increment of interest as shown on figure X1.1.

X1.2.1.2 Pick two points, *a* and *b*, on the curve before the point of maximum curvature such that log-time *b* is four times as great as log-time *a*. Draw a horizontal line through point *b* on the curve. Locate point *c* on the horizontal line through point *b* directly below point *a*. Draw a horizontal line ϵ_o above the curve through point *d* at log-time *a* where the vertical distance from *a* to *d* equals the vertical distance from *a* to *c* as shown on figure X1.1. Where line ϵ_o intersects the *y* axis is the axial strain in percent at zero percent consolidation. Several trials are usually advisable to obtain an average line for ϵ_o.

X1.2.1.3 Draw a line *AB* tangent to the linear portion of the curve below the point of maximum curvature.

X1.2.1.4 Draw a line *DE* tangent to the curve where it begins to flatten out. Lines *AB* and *DE* should intersect at point *C*.

X1.2.1.5 Draw a horizontal line ϵ_{100} through point *C* to the *y* axis. Where this line intersects the *y* axis is the axial strain in percent at 100 percent of primary consolidation.

X1.2.1.6 Calculate the axial strain at 50 percent of primary consolidation.

$$\epsilon_{50} = \frac{\epsilon_{100} + \epsilon_0}{2} \qquad \text{(X1-1)}$$

where:

ϵ_{50} = axial strain at 50% of primary consolidation, %
ϵ_{100} = axial strain at 100% of primary consolidation, %
ϵ_0 = axial strain at zero percent of primary consolidation, %

X1.2.1.7 Draw a horizontal line from the calculated axial strain at 50 percent consolidation to the consolidation curve. Draw a vertical line from the point of intersection to the log-time axis to determine the time t_{50} at 50 percent of primary consolidation.

X1.2.1.8 Find the time factor T_{50} from table X1.1.

Table X1.1.–Values of T_v for values of U.

Percent consolidation, U	* Time factor, T_v
0	0.000
5	.002
10	.008
15	.018
20	.031
25	.049
30	.071
35	.096
40	.126
45	.159
50	.197
55	.239
60	.286
65	.340
70	.403
75	.477
80	.567
85	.684
90	.848
100	0

* Average of values from [1].

X1.2.1.9 Calculate average height of the specimen for the pressure increment of interest.

$$H_{ave} = \frac{H_i}{2}\left(\frac{1-\epsilon_i}{100} + \frac{1-\epsilon_f}{100}\right) \qquad \text{(X1-2)}$$

where:

H_{ave} = average height of specimen for pressure increment of interest, in
H_i = initial specimen height, in
ϵ_i = axial strain at initial reading for pressure increment of interest, %
ϵ_f = axial strain at final reading for pressure increment of interest, %
100 = convert from percent to decimal

X1.2.1.10 Calculate the coefficient of consolidation.

$$c_v = C\left[\frac{T_{50}\left(\frac{H_{ave}}{2}\right)^2}{t_{50}}\right] \qquad \text{(X1-3)}$$

where:

c_v = coefficient of consolidation, ft²/yr
T_{50} = time factor at 50% of primary consolidation (dimensionless)
H_{ave} = average height of specimen for pressure increment of interest, in
t_{50} = time at 50% of primary consolidation, s
C = 2.19×10^5 changes in²/s to ft²/yr

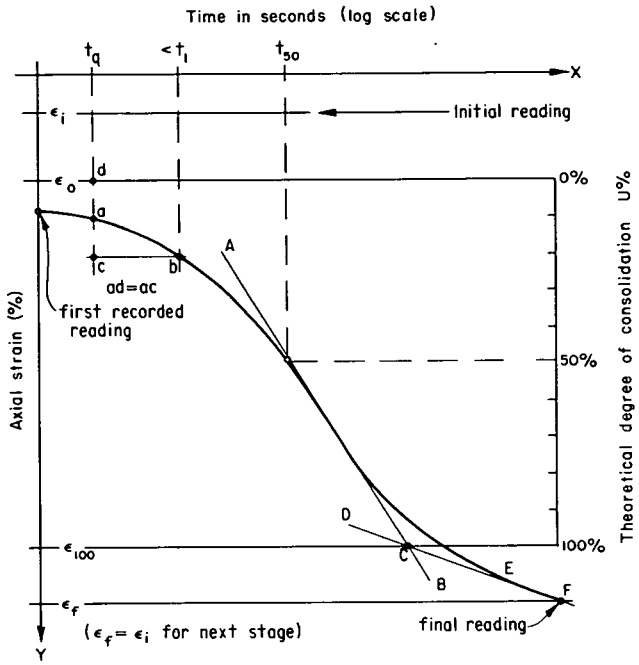

Figure X1.1.–Percent axial strain versus log time (log method) — example.

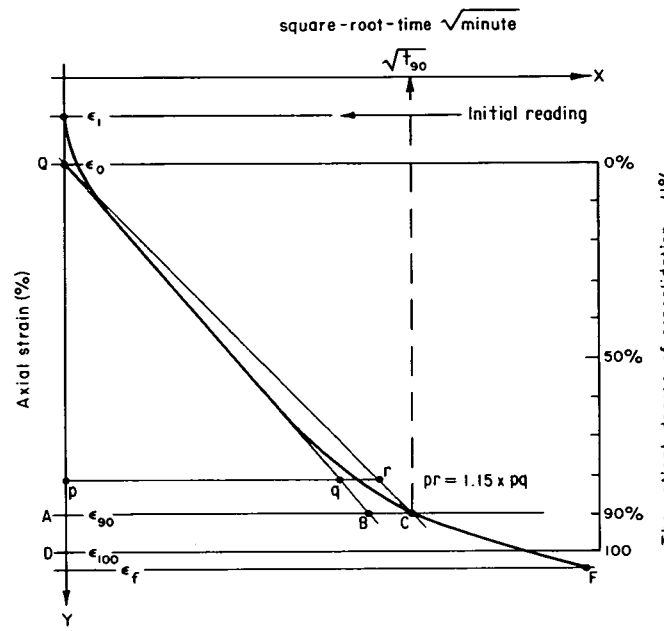

Figure X1.2.–Percent axial strain versus square root of time (square root of time method) — example.

X1.2.2 *Square Root of Time Method*:

X1.2.2.1 Plot axial strain (percent) versus the square root of time in minutes as shown on figure X1.2.

X1.2.2.2 Extend the straight line portion of the laboratory data curve to form line *QB* as shown on figure X1.2. Where the line intersects the *y* axis, point *Q*, is the corrected zero percent point ϵ_0.

X1.2.2.3 Choose a convenient point *q* on line *QB*. Draw a horizontal line through *q* such that the length of line segment $pr = 1.15 \times pq$ as shown on figure X1.2.

X1.2.2.4 Draw a straight line through *Q* and *r*. Extend this line to intersect the laboratory data curve of axial strain versus square root of time at point *C* corresponding to 90 percent of primary consolidation.

X1.2.2.5 Draw a horizontal line from point *C* to the *y* axis. Where this line intersects the *y* axis is the axial strain at 90 percent of primary consolidation ϵ_{90}.

X1.2.2.6 Draw a vertical line from *C* to the *x* axis. Where the line intersects the *x* axis is the time t_{90} to 90 percent of primary consolidation.

X1.2.2.7 Find the time factor at 90 percent of primary consolidation, T_{90} using table X1.1.

X1.2.2.8 Calculate the coefficient of consolidation.

$$c_v = C\left[\frac{T_{90}\left(\frac{H_{ave}}{2}\right)^2}{t_{90}}\right] \qquad \text{(X1-4)}$$

where:

c_v = coefficient of consolidation, ft²/yr
T_{90} = time factor at 90% of primary consolidation (dimensionless)
H_{ave} = average height of specimen for pressure increment of interest, in (see X1.2.1.9)
t_{90} = time at 90% of primary consolidation, min
C = 3,650 changes in²/min to ft²/yr

X1.3 Reference

[1] Das, B. M., *Advanced Soil Mechanics*, 1st ed., Hemisphere Publishing Corporation, Washington D.C., 1983.

X1.3.1 *Background References*:

Taylor, D. W., *Soil Mechanics*, 1st ed., John Wiley and Sons Inc., New York, New York, 1948.

Koltz and Kovacs, *Geotechnical Engineering*, 1st ed., Prentice Hall Inc., Englewood Cliffs, New Jersey, 1981.

Winterkorn and Fang, *Foundation Engineering Handbook*, Von Norstrand Reinhold Co., New York, New York, 1975.

Soil Mechanics, ch. 4, Settlement Analysis, EM 1110-2-21904, pt. CX1X, U.S. Army Corps of Engineers, U.S. Government Printing Office, 1969-0-364-987, Washington D.C., January 1953.

X2. DETERMINING CONSOLIDATION TEST EQUIPMENT DEFORMATION

X2.1 Scope

This appendix outlines the procedure for determining the deformation of the one-dimensional test equipment. The deformation test is performed immediately prior to performing the one-dimensional consolidation test and uses the same loading pressures and sequence as the one-dimensional consolidation test.

X2.2 Procedure

X2.2.1 All data are to be recorded on the "Consolidation Equipment Deformation" form as shown on figure 13.

NOTE X2.1–This procedure assumes that a pneumatic load frame is used to apply the required pressures. If another type of loading unit is used, changes in the procedure will need to be made accordingly in order to obtain the required data.

X2.2.2 Record the diameter of the porous plates to be tested and the height of the corresponding specimen. Place a check in the box—as on figure 13—for the following: end plate material, loading unit, and measurement device. If necessary, record the loading unit number.

X2.2.3 Locate the consolidometer baseplate, two porous plates, and loading plate to be tested, and record their consolidometer set number as on figure 13.

X2.2.4 Record the loading pressures required in the testing program. The pressures shall be in accordance with those for the one-dimensional consolidation test.

X2.2.5 Ensure, by any acceptable means, that the loading plates are within ±0.001 inch of being flat. If the tolerance is not met then machine the plates as necessary.

X2.2.6 Place the one-dimensional consolidation equipment on the pneumatic load frame such that the piston head is 2.75±0.125 inch above the pneumatic load frame base at the time the seating pressure is being applied. Table X2.1 will help in obtaining the correct height and sequence of equipment.

Table X2.1.–Consolidation test deformation equipment.

Equipment	*Height, inch*
Loading plate	0.375
Top porous plate	.375
Loading plate (extra)	.250
Bottom porous plate	.375
Consolidometer baseplate	.375
Brass spacers, 2 for 4.25-inch diameter specimens, 1 for 2.00-inch diameter specimen	.500

X2.2.7 Place the two brass spacers on the pneumatic load frame base. Place the consolidometer baseplate on the spacers, and the bottom porous plate into the depression in the consolidometer baseplate. Place the loading plate (extra) on the bottom porous plate. Place the top porous plate on the loading plate (extra). Place the loading plate on the top porous plate. Ensure that all equipment is centered on the pneumatic load frame.

X2.2.8 Apply the maximum pressure in column 1 to the one-dimensional test equipment prior to recording any readings. Check "yes" for porous plates stressed to maximum pressure prior to test. After one minute has elapsed, release the pressure on the one-dimensional consolidation test equipment.

X2.2.9 Apply the first pressure on the one-dimensional consolidation test equipment in accordance with the appropriate steps in subparagraph 14.6 Seating Pressure Application and Initial Height Determination. Record the pressure gauge reading in column 2. Read and record the measurement device reading in column 4. Readings should be recorded for the 10 second time interval.

X2.2.10 Continue to apply pressure in the sequence shown in column 1, in accordance with the appropriate steps in subparagraph 14.7 Specimen Loading (dry specimen), and 14.9 Rebound Upon Unloading. Record the pressure gauge reading in column 2. Indicate which gauge is used for each reading in column 3. Read and record the measurement device reading in column 4.

X2.2.11 Remove any remaining pressure from the one-dimensional consolidation equipment, and remove the equipment from the pneumatic load frame.

X2.2.12 Calculate and record the deformation correction in column 5.

X2.2.13 Calculate and record the axial strain (percent) in column 6. Use the nominal specimen height when calculating axial strain.

X2.2.14 If the maximum axial strain that occurs is less than 2.0 percent, check "yes" for *Maximum axial strain due to equipment deformation is less than 2.0 percent.* If not, then check "no" and systematically check for any parts that have excessive compression; repair and replace as necessary.

X2.2.15 Plot the pressure versus deformation as shown on figure 14.

X2.3 Calculations

X2.3.1 Calculate deformation.

$$\Delta_d = R_a - R_b \qquad \text{(X2-1)}$$

where:

Δ_d = deformation correction, in
R_a = current measurement device reading, in
R_b = initial measurement device reading, in

X2.3.2 Calculate axial strain.

$$\epsilon = 100 \left(\frac{\Delta_d}{H_i}\right) \qquad \text{(X2-2)}$$

where:

ϵ = axial strain, %
Δ_d = deformation, in
H_i = initial specimen height, in
100 = convert from decimal to percent

X3. PNEUMATIC LOAD FRAME CALIBRATION

X3.1 Scope

This appendix describes the procedure for calibrating a dual range pneumatic load frame of the type used by the Bureau's Denver Office, Soil and Rock Testing Laboratory, Denver, Colorado.

NOTE X3.1.–This procedure is performed annually and after any repairs or servicing of an individual pneumatic load frame.

X3.2 Procedure

X3.2.1 Determine and record on the "Pneumatic Load Frame Calibration" form (fig. X3.1) the required pressures for a 4.25-inch diameter specimen. These pressures are arbitrary and should be selected based on the typical required pressure sequence for one-dimensional consolidation testing and on the limits of the load frame and load cells available. These values are recorded in column 4.

X3.2.2 Using the required pressures and the area of a 4.25-inch diameter specimen (14.19 in^2), calculate and record the required forces to be measured by the load cells, record in column 1.

X3.2.3 Using the required forces calculated in subparagraph X3.2.2 and the area of a 2.0-inch diameter specimen (3.14 in^2), calculate and record in column 3 the required pressures for the 2.0 inch diameter specimen.

X3.2.4 Check that the pneumatic load frame pressure gauge needles for both gauges are on 0.0 lbf/in^2 and that the load switch is up.

X3.2.5 Select a 2,000-, 5,000-, or 10,000-lbf capacity load cell. Calibrate the load cells in accordance with USBR 1045. If the calibration is current, then proceed.

X3.2.5.1 Use the 2,000-lbf capacity load cell if using the 15-lbf/in^2 low range pressure gauge. Use a 5,000-lbf capacity load cell for the 30 lbf/in^2 low range gauges. For the example in this procedure a 2,000-lbf capacity load cell is used.

X3.2.6 From the load cell calibrations, calculate and record in column 2 the load cell voltage output required for each load.

X3.2.7 Center the load cell on the pneumatic load frame base under the piston head. Ensure that the height from the pneumatic load frame base to the top of the piston head is 2.75 inches. If necessary, use spaces to obtain this height.

X3.2.8 Calibrate the low range pressure gauge.

X3.2.8.1 Turn the low range air control, which regulates the pressure for the low range pressure gauge (gauge No. 1), clockwise and record the highest pressure on the low range pressure gauge at which the piston head does not come into contact with the load cell. Record the required pressure and voltage as zero.

X3.2.8.2 Turn the low range air control, which regulates the pressure for the low range pressure gauge (gauge No. 1), clockwise until the piston head just touches the load cell.

X3.2.8.3 While reading the voltage output from the load cell, adjust the low range air control until the voltage equals the required voltage as shown on figure X3.1 for a 1-lbf/in^2 pressure on a 4.25-inch diameter specimen.

X3.2.8.4 Read the low range pressure gauge and enter the reading in column 5 on figure X3.1.

X3.2.9 Turn the low range air control clockwise until the next required voltage reading is achieved on the load cell.

X3.2.9.1 Voltage readout will equal the required voltage for a 2-lbf/in^2 pressure on a 4.25-inch diameter specimen. Read the low range pressure gauge and record the gauge value in column 5 as shown on figure X3.1.

X3.2.10 Repeat paragraph X3.2.9 until there is approximately a 1,500-pound force on the load cell, which is equivalent to 15-lbf/in^2 on the low range pressure gauge.

X3.2.11 Turn the low range air control counterclockwise until the low range pressure gauge reads 0.0 lbf/in^2 and the piston head lifts off the load cell.

X3.2.12 Remove the load cell from the pneumatic load frame.

X3.2.13 Plot the gauge reading (lbf/in^2) versus applied pressure (lbf/in^2) for a 4.25-inch and a 2.00 inch diameter specimen as shown on figures X3.2 and X3.3.

X3.2.14 Calibrate the high range pressure gauge.

X3.2.14.1 Center the next required capacity load cell on the pneumatic load frame base under the piston head.

X3.2.14.2 Pull the load switch down, turn the low range gauge shut-off clockwise until it is closed.

X3.2.14.3 Pull out the range selector switch in the center back of the base of the pneumatic load frame. Pull up on the load switch slowly.

X3.2.14.4 Turn the high range air control, which regulates the pressure for the high range pressure gauge (gauge No. 2), clockwise and record the highest pressure on the high range pressure gauge at which the piston head does not come into contact with the load cell. Record the required pressure and voltage as zero.

X3.2.14.5 Turn the high range air control clockwise until the piston head just touches the load cell.

NOTE X3.2.–If the piston head does not come down, turn the bleeder valve counterclockwise.

X3.2.15 While reading the voltage output from the load cell, adjust the high-range air control until the required voltage for the first high range pressure on a 4.75-inch diameter specimen is obtained. Record the pressure gauge reading in column 5 as shown on figure X3.1. Proceed to the next voltage reading. Record high range pressure gauge readings at voltage outputs equivalent to about 50-lbf/in^2 increments on a 4.25-inch diameter specimen up to the capacity of the load cell or ten readings are taken.

CAUTION: Do not exert force on a load cell beyond its rated capacity.

7-2420 (3-89) Bureau of Reclamation	**PNEUMATIC LOAD FRAME CALIBRATION**	Designation USBR 5700 - 89
Calibrated By Example		Date
Checked By		Date
Load Frame No. 106	Area = 14.19 in^2 (9.155 x 10^{-3} m^2)	

LOW RANGE

Load Cell No. 25806	Maximum Load 2000 ☒ lbf ☐ N	Voltage 10 Volts	1 Volt = 200 ☒ lbf ☐ N

READING	REQUIRED FORCE ☒ lbf ☐ N	REQUIRED LOAD CELL OUTPUT (volts)	REQUIRED PRESSURES FOR 2.00 IN. SPECIMEN DIAMETER ☒ lbf/in^2 ☐ kPa	REQUIRED PRESSURES FOR 4.25 IN. SPECIMEN DIAMETER ☒ lbf/in^2 ☐ kPa	PRESSURE GAUGE READING ☒ lbf/in^2 ☐ kPa
	(1)	(2)	(3)	(4)	(5)
1	14.2	0.07	4.5	1	0.35
2	28.4	0.15	9.0	2	0.50
3	56.8	0.30	18.1	4	0.72
4	113.5	0.60	36.1	8	1.30
5	283.8	1.49	90.4	20	3.05
6	567.6	2.98	180.8	40	5.80
7	851.4	4.47	271.1	60	8.62
8	1135.2	5.96	361.5	80	11.40
9	1419.0	7.45	451.9	100	14.12
10	1844.7	9.68	587.5	130	18.20

HIGH RANGE

Load Cell No. 10-N15	Maximum Load 10000 ☒ lbf ☐ N	Voltage 10 Volts	1 Volt = 1000 ☒ lbf ☐ N

READING	REQUIRED FORCE ☒ lbf ☐ N	REQUIRED LOAD CELL OUTPUT (volts)	REQUIRED PRESSURES FOR 2.00 IN. SPECIMEN DIAMETER ☒ lbf/in^2 ☐ kPa	REQUIRED PRESSURES FOR 4.25 IN. SPECIMEN DIAMETER ☒ lbf/in^2 ☐ kPa	PRESSURE GAUGE READING ☒ lbf/in^2 ☐ kPa
	(1)	(2)	(3)	(4)	(5)
1	1419.0	1.49	451.9	100	3.55
2	2128.5	2.23	677.9	150	5.26
3	2838.0	2.98	903.8	200	6.95
4	3547.0	3.73	1129.6	250	8.66
5	4257.0	4.47	1355.7	300	10.20
6	4966.5	5.22	1581.7	350	12.05
7	5676.0	5.96	1807.6	400	13.76
8	7095.0	7.45	2259.6	500	17.15
9	8514.0	8.94	2711.5	600	20.55
10	9223.5	9.69	2937.4	650	22.26

Remarks: _____

Figure X3.1.–Pneumatic load frame calibration — example.

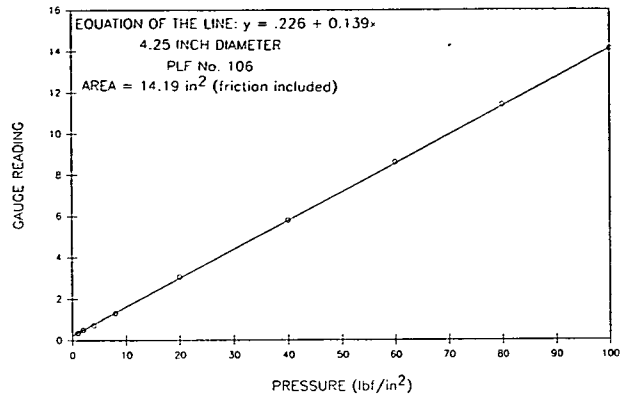

Figure X3.2.–Gauge reading versus applied pressure calibration (4.25-inch diameter specimen-low range) — example.

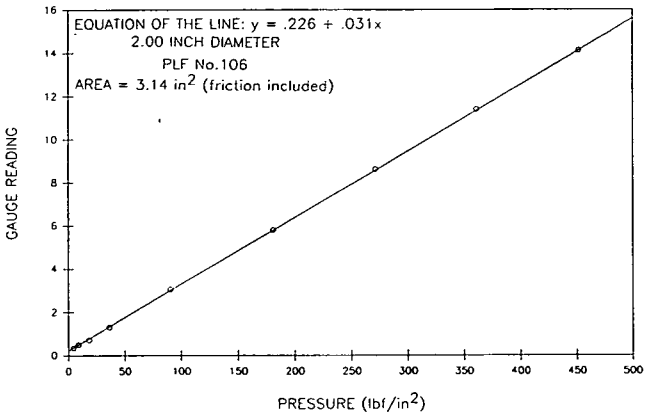

Figure X3.3.–Gauge reading versus applied pressure calibration (2.0-inch diameter specimen-low range) — example.

X3.2.16 Repeat paragraph X3.2.14 of this procedure until all pressure gauge readings have been recorded on figure X3.1.

X3.2.17 Turn the high range air control counterclockwise until the high range pressure gauge reads zero and the piston head lifts off the load cell.

X3.2.17.1 If the bleeder valve was opened in note X3.3, turn it clockwise until it closes.

X3.2.18 Pull down the load switch and press in the range selector switch in the center back of the pneumatic load frame.

X3.2.19 Turn the low range shut-off counterclockwise until it is fully open and slowly raise the load switch.

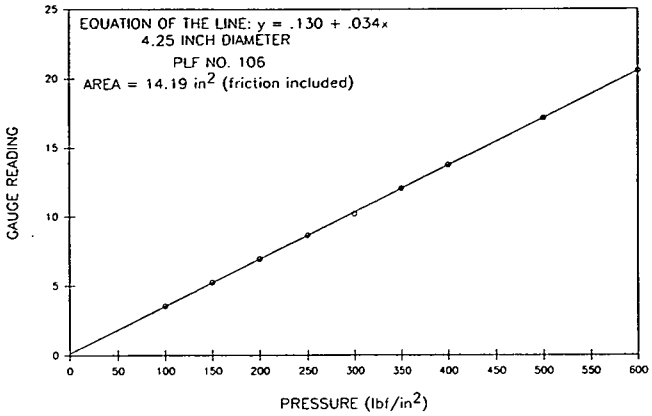

Figure X3.4.–Gauge reading versus applied pressure calibration (4.25-inch diameter specimen-high range) — example.

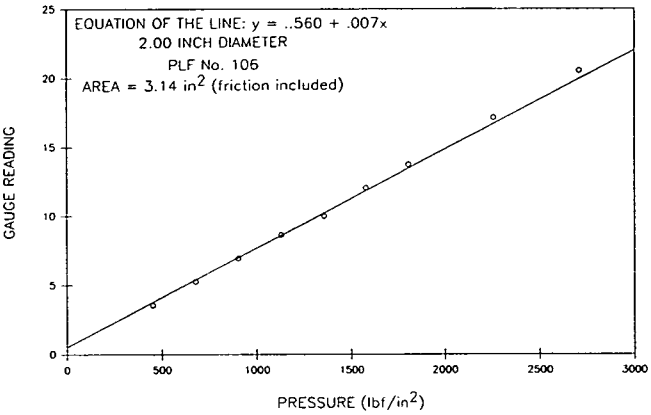

Figure X3.5.–Gauge reading versus applied pressure calibration (2.0-inch diameter specimen-high range) — example.

CAUTION.–Raise load switch very slowly so as not to damage the gauges.

X3.2.20 Remove the load cell from the pneumatic load frame base.

X3.2.21 Plot the high range pressure gauge readings (lbf/in²) versus applied pressure (lbf/in²).

X3.2.21.1 Plot the gauge readings versus applied pressure (lbf/in²) for a 4.25-inch diameter specimen as shown on figure X3.4. Plot the gauge readings versus applied pressure (lbf/in²) for a 2.00-inch diameter specimen as shown on figure X3.5.

X4. CALIBRATING THE CONSOLIDOMETER SPECIMEN RING

X4.1 Scope

This appendix outlines the procedure for calibrating the specimen rings described in subparagraph 8.2.2.1 of this designation.

X4.2 Significance and Use

X4.2.1 Specimen rings must be calibrated prior to use to ensure accurate laboratory test results. Specimen rings not within specified tolerance can result in specimen placement unit weights that can vary by ±0.5 percent or more. This calibration procedure is to be performed upon receipt of the specimen ring and annually thereafter or if the volume of the specimen ring is in question.

X4.3 Procedure

X4.3.1 All data are to be recorded in the "Specimen Ring Calibration form as shown on figure X4.1. For a 4.250-inch diameter by 1.25-inch high specimen ring, two calibration plugs; one 4.240±0.001 inch diameter and the other 4.260±0.001 inch diameter, each having a height of 1.25 inches are used. For a 2.000-inch diameter specimen ring, two calibration plugs; one 1.995±0.001 inch diameter and the other 2.005±0.001 inch diameter, each having a height of 0.75 inch are used.

X4.3.2 The specimen ring is accepted if the minimum diameter calibration plug will insert into the specimen ring but the maximum diameter calibration plug will not. If these criteria are not met the specimen ring should be discarded or remachined if appropriate.

X4.3.3 Attempt to insert the minimum diameter calibration plug into the specimen ring. If the minimum diameter calibration plug can be inserted into the specimen ring place a checkmark in the "yes" column as shown on figure X4.1. If not, check the "no" column and the rejected column.

X4.3.4 If the minimum diameter calibration plug can be inserted into the specimen ring, attempt to insert the maximum diameter calibration plug into the specimen ring. If it can be inserted, place a checkmark in the "yes" column and in the rejected column. If it cannot be inserted, place a checkmark in the "no" column.

X4.3.5 If there is a checkmark in the "yes" column below the insert minimum diameter calibration plug and in the "no" column below the "Insert maximum diameter calibration plug" place a checkmark in the "Accepted yes/no" column. If this is not the case place a checkmark in the "Rejected yes/yes or no/no" column.

X4.3.6 Specimen rings are to be calibrated annually and results recorded on "Specimen Ring Calibration" (fig. X4.1). Specimen rings also should be calibrated whenever they may have been damaged.

X4.4 Interpret Results

X4.4.1 If the specimen rings are accepted, nominal dimensions will be used for all specimen area and volume calculations. If the specimen rings are rejected, they are to be remachined if possible, or discarded and replaced with acceptable specimen rings. Results recorded on the "Specimen Ring Calibration" form should be filed in the laboratory calibration book corresponding to the one-dimensional test.

7-2415 (3-89) Bureau of Reclamation	SPECIMEN RING CALIBRATION	Designation USBR 5700 - 89
Calibrated by Example	Date	Next Calibration Date

Specimen Ring Diameter	4.25 ☒ in ☐ mm	Specimen Ring Height	1.25 ☒ in ☐ mm
Minimum Calibration Plug No.	1	Minimum Calibration Plug Dia.	4.240 ☒ in ☐ mm
Maximum Calibration Plug No.	2	Maximum Calibration Plug Dia.	4.260 ☒ in ☐ mm

SPECIMEN RING NO.	INSERT MINIMUM CALIBRATION PLUG YES	INSERT MINIMUM CALIBRATION PLUG NO	INSERT MAXIMUM CALIBRATION PLUG YES	INSERT MAXIMUM CALIBRATION PLUG NO	ACCEPTED YES/NO	REJECTED YES/YES NO/NO
111	✓			✓	✓	
116	✓			✓	✓	
114		✓		✓		✓
122	✓			✓	✓	
106	✓			✓	✓	

Figure X4.1.–Specimen ring calibration — example.

UNITED STATES DEPARTMENT OF THE INTERIOR
BUREAU OF RECLAMATION

USBR 5705-89

PROCEDURE FOR

DETERMINING THE ONE-DIMENSIONAL EXPANSION PROPERTIES OF SOILS

INTRODUCTION

This procedure is under the jurisdiction of the Geotechnical Services Branch, code D-3760, Research and Laboratory Services Division, Denver Office, Denver, Colorado. The procedure is issued under the fixed designation USBR 5705. The number immediately following the designation indicates the year of acceptance or the year of the last revision.

1. Scope

1.1 This designation outlines the procedure for determining the one-dimensional expansion properties of soils. The procedure can be performed using undisturbed or compacted specimens to determine (1) the magnitude of expansion after wetting under a known axial pressure, and (2) the magnitude of axial pressure required to return the wetted specimen to the initial void ratio (height) after primary expansion has occurred.

2. Auxiliary Tests

2.1 If the test is to be performed using a compacted specimen, a soil sample must be obtained in accordance with USBR 5205. The initial and final moisture contents of the test specimen are to be determined in accordance with USBR 5300. The specific gravity of the soil must be determined in accordance with USBR 5320 in order to calculate the height of solids in the test specimen. The specimen must be prepared in accordance with USBR 5210 or 5215 prior to performing this procedure. The gradation analysis, liquid limit, plastic limit, and shrinkage limit of the soil sample are to be determined in accordance with USBR 5330, 5350, 5360, and 5365, respectively.

3. Applicable Documents

3.1 *USBR Procedures*:
USBR 1000 Standards for Linear Measurement Devices
USBR 1007 Calibrating Dial Indicators
USBR 1009 Calibrating Compaction Molds
USBR 1012 Calibrating Balances or Scales
USBR 5205 Preparing Soil Samples by Splitting or Quartering
USBR 5210 Preparing Compacted Soil Specimens for Laboratory Use
USBR 5215 Preparing Soil Specimens for Laboratory Use From Undisturbed Samples
USBR 5300 Determining Moisture Content of Soil and Rock by the Oven Method
USBR 5320 Determining Specific Gravity of Soils
USBR 5330 Performing Gradation Analysis of Fines and Sand Size.Fraction of Soils, Including Hydrometer Analysis
USBR 5350 Determining the Liquid Limit of Soils by the One-Point Method
USBR 5360 Determining the Plastic Limit and Plasticity Index of Soils
USBR 5365 Determining Shrinkage Limit and Shrinkage Ratio of Soils
USBR 5700 Determining the One-Dimensional Consolidation Properties of Soils (Incremental Stress)

4. Summary of Method

4.1 A compacted or undisturbed soil specimen is prepared and placed in a fixed-ring consolidometer as shown on figure 1. A seating pressure, normally 1 lbf/in^2 (7 kPa), is applied to the specimen. The initial height of the specimen is determined, and the specimen is inundated with water. The specimen is allowed to expand until primary expansion is complete. After primary expansion, axial pressure on the specimen is increased until its initial void ratio (height) is reached (see fig. 2).

5. Significance and Use

5.1 The relative expansive potential determined from this procedure can be used to estimate heave of a foundation or of compacted earthwork for a given final moisture and loading condition. The initial moisture content and void ratio of the test specimen should be representative of anticipated in-place soil condition.

5.2 Soils containing the clay mineral *montmorillonite* are likely to have significant expansion potential and are commonly tested by this procedure.

5.3 Laboratory prepared test specimens should duplicate the in-place soil or field compacted soil conditions as closely as possible because relatively small variations in unit weight and moisture content can significantly alter expansion characteristics of the specimen. Differences in soil fabric of compacted specimens, such as obtained by kneading or static compaction, also can have a significant impact on the expansive behavior of cohesive soils.

5.4 Estimates of the expansion characteristics of soil obtained from this procedure are often of particular importance in designing tunnel or canal linings, floor slabs, or lightly loaded structures, and in evaluating their

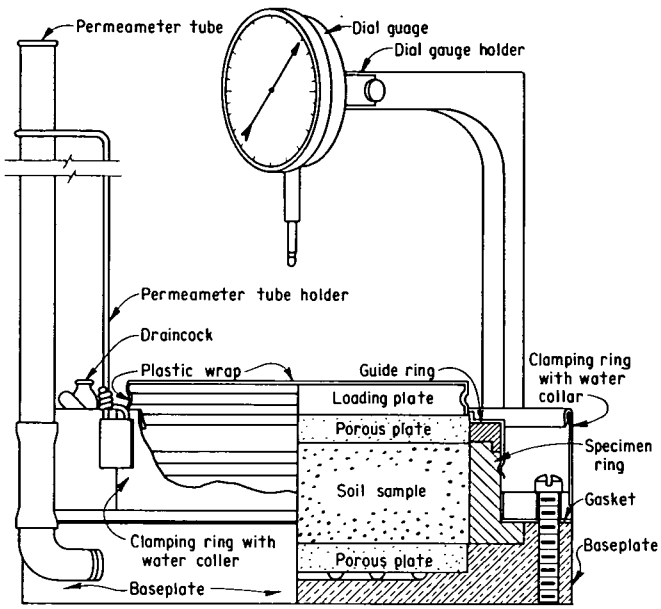

Figure 1. – Schematic of fixed-ring consolidometer.

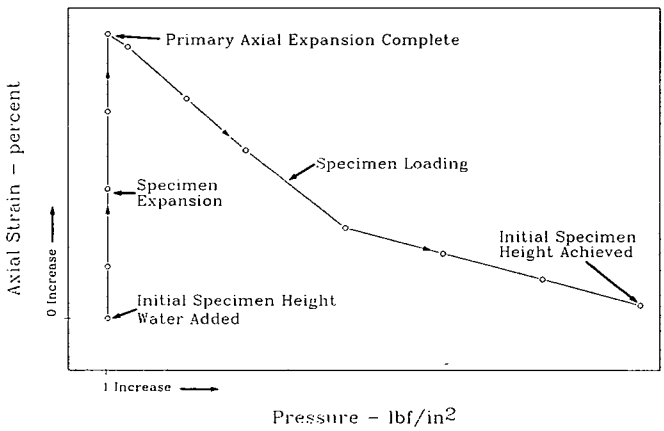

Figure 2. – Schematic of one-dimensional expansion test.

performance. However, when using these estimates, it is recognized that expansion parameters determined from these test methods for the purpose of estimating in-place heave of foundations and compacted soils may not be representative of many field conditions because:

5.4.1 Lateral expansion and lateral confining pressure are not simulated.

5.4.2 Rates of expansion indicated by the one-dimensional expansion tests are not always reliable indicators of field rates of heave due to fissures in the in-place soil mass and to inadequate simulation of the actual availability of water to the soil in place. The actual availability of water to the in-place soil may be cyclic, intermittent, or may depend on in-place situations such as pervious soil-filled trenches and broken water and drain lines.

5.4.3 Secondary or long-term expansion may be significant for some soils and should be added to primary expansion. Secondary expansion is not determined in this procedure.

5.4.4 Chemical content in the inundating water affects volume change and expansion pressure; i.e., field water containing large concentrations of calcium ions will produce less swelling than field water containing large concentrations of sodium ions or even rainwater.

5.5 This procedure provides a measure of the confined expansion, percent expansion under a given vertical confining pressure, and the recompression pressure.

6. Terminology

6.1 Definitions are in accordance with USBR 3900. A term of particular significance is:

6.1.1 *Expansion.*–The increase in volume of a soil mass.

6.2 Terms not included in USBR 3900 specific to this designation are:

6.2.1 *Axial Strain.*–The ratio, expressed as a percent, of the change in length in the axial direction to the original axial length.

6.2.2 *Confined Expansion.*–Axial expansion (axial strain) following absorption of water at a constant vertical (axial) pressure.

6.2.3 *Recompression Pressure.*–The vertical pressure required to compress a specimen back to its original void ratio (height) after primary expansion is complete.

7. Interferences

7.1 *Friction*:

7.1.1 The specimen ring interior must be clean and smooth. The specimen ring may be made of brass or stainless steel.

7.1.2 Care must be taken when trimming an undisturbed specimen to remove any coarse sand or fine gravel protruding from the sides of the specimen and to refill the voids with fines. This prevents added friction on the sides of the specimen ring. Be sure to indicate in the report if any specimen voids were refilled.

7.1.3 Height to diameter ratio is to be between 1:2.5 and 1:3.5. If the specimen is too thick, the time to wet the specimen completely is greatly increased.

7.2 *Porous Plates*:

7.2.1 Porous plates are to be cleaned to ensure maximum water flow to and from the specimen.

7.2.2 Porous plates are to be smooth and level on the surface of the specimen and are to fit into the specimen ring and guide ring with no more than 0.01 to 0.02 inch (0.3 to 0.5 mm) clearance. This prevents loss of the specimen around the edges of the plates.

7.2.3 When testing specimens for which pressures are likely to exceed 600 lbf/in^2 (4140 kPa), use sintered bronze porous plates because they are less likely to break.

7.3 *Sample Storage*:

7.3.1 Storing samples in sampling tubes is not recommended for expansive soils even though stress relief may be minimal. The influence of rust and penetration of drilling fluid or free water into the sample may adversely influence laboratory test results.

7.3.2 If tube type samples are to be stored prior to testing, they should be extruded from the sampling tubes

as quickly as possible after sampling and thoroughly sealed to minimize moisture loss. The sample should be extruded from the sampling tube in the same direction as when sampled to minimize sample disturbance.

8. Apparatus

8.1 *General Apparatus*:

8.1.1 *Drying Oven.*–An oven, thermostatically controlled, preferably of the forced-draft type, and capable of maintaining a uniform temperature of 110±5 °F (230±9 °C) throughout the drying chamber. Two ovens are recommended for this procedure.

8.1.2 *Balances or scales.*–Typical balances or scales used for this designation are:

Application	*Readable to*	*Approximate capacity*
Moisture content	0.01 g	500 g
Mass of compaction specimen	0.1 g	1000 g

8.1.3 *Dial Gauge.*–A dial gauge readable to the nearest 0.0001 inch (0.003 mm), having a minimum 1-inch (25-mm) travel.

8.1.4 *Stopwatch.*–A timing device readable to 1 second used to time test reading intervals.

8.1.5 Specimen preparation equipment as specified in USBR 5215.

8.1.6 Specimen compaction equipment as specified in USBR 5210.

8.2 *Equipment Used in This Procedure*:

8.2.1 *Load Frame.*–A device capable of applying a vertical (axial) load on the specimen to achieve a pressure of at least 200 percent of the maximum anticipated design pressure or the pressure required to return the specimen to its original void ratio (height) after expansion. A platform scale load frame suitable for this procedure is shown on figure 3. The device incorporates a 3,000-lbm (1360-kg) capacity platform scale mounted on a stand and equipped with a screw jack attached to the underside of the frame. The jack controls a loading yoke which extends through the scale platform and over the fixed-ring consolidometer (fig. 1) which rests on the scale platform. A pressure is applied to, or released from, the soil by operating the jack and moving the loading yoke up or down. The mass required to apply the desired pressure is measured on the scale beam and is fully effective when the scale beam is balanced.

8.2.2 *Fixed-Ring Consolidator.*–A container (figs. 1 and 4) made of brass or stainless steel, designed to hold a soil specimen during one-dimensional expansion or consolidation testing. The specimen ring is securely clamped (fixed) to a baseplate. A water collar allows wetting of the specimen through the porous plates. Change in height of the specimen is measured by means of a dial gauge attached to a dial gauge holder. A specimen ring restrains lateral expansion of the specimen, but allows unrestrained axial expansion or compression during testing. A clamping ring with a water collar holds the specimen ring in the baseplate and the water reservoir aids in wetting the specimen. A rubber gasket prevents water loss between the baseplate and clamping ring. A guide ring holds the

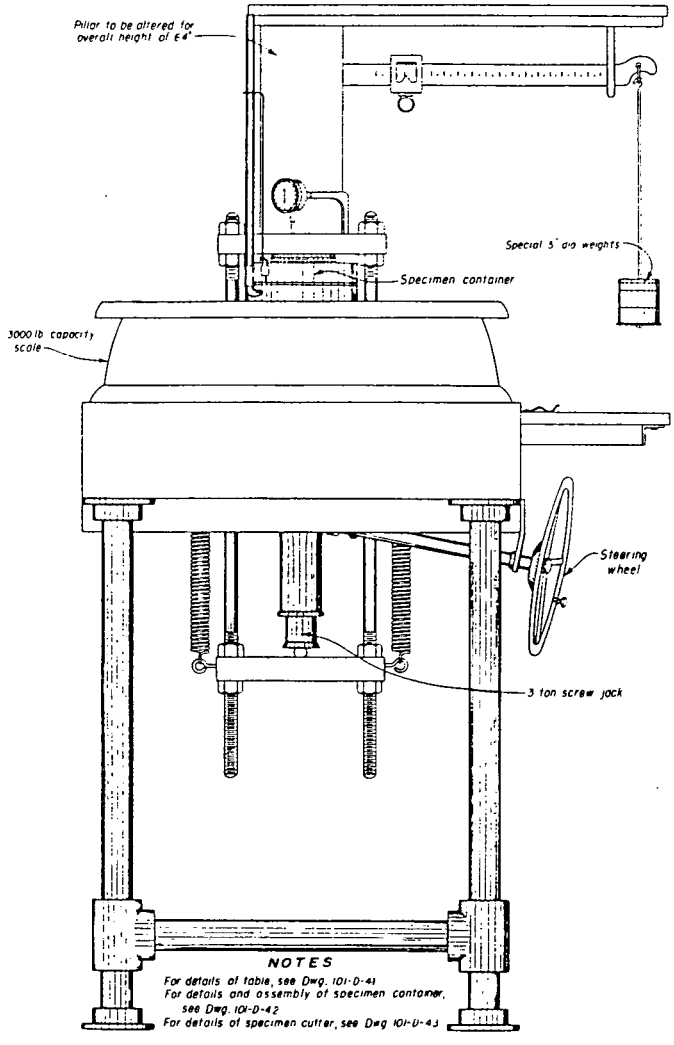

Figure 3. – Platform scale load frame with fixed-ring consolidometer in place. (101-D-40)

top porous plate in place while laterally restraining the specimen, and one or more loading plates distribute the applied load evenly over the specimen.

8.2.2.1 *Specimen Ring.*–A ring made of brass or stainless steel with a highly polished inner surface. Specimen rings are to have an inside diameter of 4.25±0.001 inch and a height of 1.25±0.001 inch (108.0±0.03 and 31.8±0.03 mm). Specimen rings having an inside diameter of 2.00±0.001 inch and a height of 0.75±0.001 inch (50.8±0.03 and 19.1±0.03 mm) also may be used.

8.2.2.2 *Porous Plates.*–Two porous plates, made of 340-grade sintered bronze or coarse-grade silicon carbide are required. The plates are to be clean and free of cracks, chips, or other nonuniformities and are to be air dried prior to use. Porous plates are to have a diameter of 4.23±0.001 inch (107.4±0.05 mm) for a specimen ring with an inside diameter of 4.25 inches (108.0 mm). For a specimen ring with an inside diameter of 2.00 inches (50.8 mm), the porous plates are to have a diameter of 1.98±0.002 inch (50.3±0.05 mm). Porous plates are to have a thickness of 0.375±0.002 inch (9.5±0.05 mm).

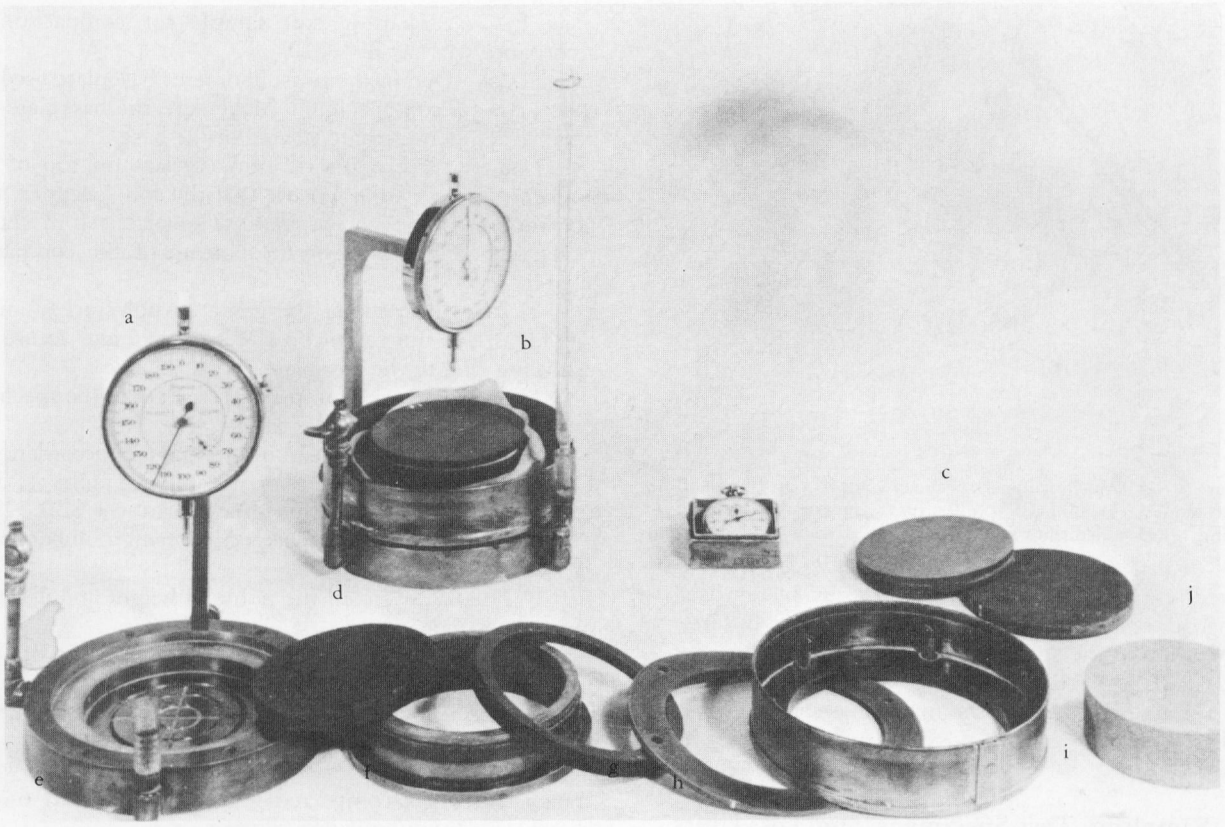

Figure 4. – Fixed-ring consolidometer. (a) dial gauge, (b) assembled consolidometer, (c) porous plates, (d) top load plate, (e) base plate, (f) specimen ring, (g) guide ring, (h) rubber gasket, (i) water collar with clamping ring, and (j) gauge block.

8.2.2.3 *Loading Plate.*–A loading plate, made of brass or stainless steel, 0.375±0.002 inch (9.5±0.05 mm) thick and either 4.125±0.002 inch or 1.875±0.002 inch (104.8±0.05 or 47.6±0.05 mm) in diameter depending on the size specimen ring used.

8.2.3 *Gauge Blocks.*–Two gauge block reference standards are required. One block, 1.25±0.002 inch in height and 4.00±0.002 inch in diameter (31.8±0.05 and 101.6±0.05 mm); and one block, 0.75±0.002 inch in height and 1.75±0.002 inch in diameter (19.1±0.05 and 44.5±0.05 mm).

8.2.4 *Cover Plates.*–Plastic or glass plates approximately 6 inches (152 mm) square and 0.25 inch (6.4 mm) thick. These are to be marked as pairs.

8.2.5 *Specimen (4.25-in dia.) Compaction Equipment* (fig. 5):

8.2.5.1 *Compaction Collar.*–A metal collar 3.625±0.002 inch in height and having an inside diameter of 4.25±0.005 inch (92.1±0.05 and 108.0±0.13 mm), and an outside diameter of 5.75±0.005 inch (146.1±0.13 mm).

8.2.5.2 *Clamping Ring.*–A brass ring 0.375±0.002 inch in height and an inside diameter of 5.01±0.002 inch (9.5±0.05 and 127.3±0.05 mm) and an outside diameter of 6.75±0.005 inch (171±0.13 mm).

8.2.5.3 *Tamper.*–A soil tamper having a head diameter greater than one-half the inside diameter of the compaction collar (fig. 5).

8.2.5.4 *Try square.*–A tool capable of measuring depths to 1/32 inch.

8.3 *Miscellaneous Equipment.*–Permeameter tube and holder, rubber tubing, pipettes, a water container for adding water to the specimen; plastic wrap and rubber bands may be needed for maintaining the moisture content of the specimen prior to testing; porcelain and copper drying pans for drying the specimen and trimmings after testing; squeeze bottle and soft bristle brushes for cleaning the specimen container at the end of the test.

9. Reagents and Materials

9.1 Unless in-place water is requested, tapwater that is free of acids, alkalies, or oils and is suitable for drinking should be used for wetting the soil specimen.

10. Precautions

10.1 *Safety Precautions*:

10.1.1 Spilled water is to be cleaned up immediately to prevent possible slipping.

10.1.2 Safety shoes are to be worn when transferring the consolidometer to or from the load frame.

10.1.3 Use asbestos gloves when removing containers from drying ovens.

10.2 *Technical Precautions*:

10.2.1 Porous plates are to be smooth ground and fine enough to minimize intrusion of soil into the plates.

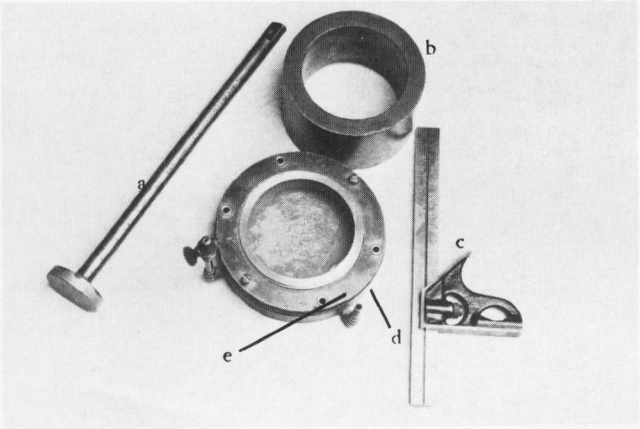

Figure 5. – 4.25-inch diameter specimen compaction equipment. (a) tamper, (b) compaction collar, (c) try square, (d) clamping ring, (e) specimen ring.

Cracked, chipped, or nonuniform porous plates used in testing can result in erroneous results or cause differential compression of the specimen during loading.

10.2.2 Different chemical constituents in water can have a dramatic effect on the expansive characteristics of a soil (see subpar. 5.4.4). If possible, in-place water should be used.

11. Sampling, Test Specimens, and Test Units

11.1 *Undisturbed Specimens*:

11.1.1 Prepare undisturbed specimens in accordance with USBR 5215. Specimens are to be prepared from samples which are a minimum of 1/2 inch (13 mm) larger in diameter and about 1 inch (25 mm) longer than the final desired dimensions of the specimen.

NOTE 1.–Extreme care should be used in orienting the cutting plane of the cutting bit to correspond to field conditions.

11.1.2 Determine the initial moisture content and specific gravity of the specimen from specimen trimmings in accordance with USBR 5300 and 5320. The results should be recorded on the back and front of figure 6 (data sheet 1).

11.1.3 If required, determine the particle size distribution, liquid limit, plastic limit and plasticity index, and shrinkage limit in accordance with USBR 5330, 5350, 5360, and 5365, respectively. These tests should be performed using the trimmings obtained when preparing the undisturbed specimen.

11.2 *Compacted Specimens*:

11.2.1 Prepare a soil sample in accordance with USBR 5205. A minimum 2-lbm (0.9-kg) [preferably 5-lbm (2.3-kg)] sample of soil passing the U.S.A. Standard series No. 4 (4.76 mm) sieve is required for each 4.25-inch (108.0-mm) diameter specimen; and at least 1 lbm (0.5 kg) [preferably 2 lbm (0.9 kg)] of soil passing the No. 4 (4.76 mm) sieve is required for each 2-inch (51-mm) diameter specimen.

11.2.2 Determine and record the initial moisture content in accordance with USBR 5300.

11.2.3 Prepare a soil sample for compaction in accordance with USBR 5210.

11.2.4 Obtain the consolidometer baseplate used for compacting a soil specimen. Make sure the baseplate has an air dried porous plate located in the base.

11.2.5 Place a plastic film (mylar) on top of the bottom porous plate to ensure that the soil specimen does not adhere to the porous plate. The plastic film should be large enough to cover the bottom of the compacted specimen.

11.2.6 Ensure that the gasket is not cracked and is flexible. Place the gasket on the baseplate and secure the clamping ring to the baseplate.

11.2.7 Place the compaction collar over the specimen ring and onto the clamping ring.

11.2.8 Compact the soil specimen in accordance to USBR 5210. Record the data in subparagraphs 11.2.8.1 through 11.2.8.6 on the appropriate form in USBR 5210.

11.2.8.1 Record the specimen ring number in the space for *Mold No.*

11.2.8.2 Record the nominal height and diameter of the specimen ring.

11.2.8.3 Record the required placement dry unit weight and placement moisture content.

11.2.8.4 Compact the specimen in three lifts unless otherwise stated in the testing program.

11.2.8.5 Record the moisture content—at which the specimen was compacted—on line 24 of figure 6 (data sheet 1) as *Initial moisture content*.

11.2.8.6 After the compaction collar is removed, the specimen is trimmed level with the top of the specimen ring using a straight edge trimmer.

11.2.9 Remove the clamping ring and rubber gasket, and place a cover plate on top of the specimen.

11.2.10 Invert the consolidometer baseplate to allow removal of the specimen ring with specimen. Make sure the plastic film is removed from the bottom of the specimen. Trim the bottom of the specimen level with the bottom of the specimen ring. Place the second cover plate over the bottom of the specimen ring and specimen. Take care to minimize specimen moisture loss.

12. Calibration and Standardization

12.1 Verify that equipment is currently calibrated in accordance with the applicable calibration procedure. If the calibration is not current, perform the calibration before using the equipment for this procedure.

USBR 1000 Standards for Linear Measurement Devices
USBR 1007 Calibrating Dial Indicators
USBR 1012 Calibrating Balances or Scales
USBR 1020 Calibrating Ovens

12.2 Calibrate the specimen rings using calibration plugs. The procedure for calibration is in appendix X1.

13. Conditioning

13.1 The test specimen is to be prepared, placed, and tested as quickly as possible to minimize unrecorded moisture loss.

14. Procedure

14.1 All data are to be recorded on the "One-Dimensional Consolidation Test" form as shown on figures 6 (data sheet 1) and 7 (data sheet 2).

14.2 Record the platform scale *Load frame number* and *Specimen ring No.* as shown on lines 1 and 2 (fig. 6). Record the *Specimen ring diameter* and *height* to the nearest 0.01 inch as shown on lines 5 and 7 (fig. 6). Calculate and record on lines 6 and 8 (fig. 6) the nominal specimen ring *area* and *volume* to the nearest 0.01 in^2 and 0.01 in^3, respectively.

14.3 Place all parts of the unassembled consolidometer (fig. 4) except the gauge block on a platform scale load frame.

14.4 Determine the consolidometer mass and record the value on line 35 (fig. 6) as *Equipment mass* to the nearest 0.1 lbm.

14.5 Remove the unassembled consolidometer parts from the scale.

14.6 Place the appropriate size gauge block for the size specimen to be tested on the platform scale and determine and record *Gauge block* mass to the nearest 0.1 lbm as shown on line 45 (fig. 6). Record the *Gauge block No.* and the *Gauge block height* as shown on lines 3 and 4 (fig. 6).

14.7 Calculate the mass required to apply a seating load of 1-lbf/in^2 pressure on the specimen. Record to the nearest 0.1 lbm the value obtained as *Mass for seating load* as shown on line 46 (fig. 6). The seating load may be changed if required for a particular specimen.

14.8 Calculate and record to the nearest 0.1 lbm the mass required for the *Gauge block pressure seating load* as shown on line 47 (fig. 6). This is the sum of the *Equipment mass* (subpar. 14.4), the *Gauge block mass* (subpar. 14.6), and the *Mass for seating load* (subpar. 14.7).

14.9 Place the consolidometer baseplate on the platform scale.

14.10 Place a clean, air-dried porous plate into the consolidometer baseplate. Position the gauge block on top of the porous plate, and place the specimen ring over the gauge block and into the baseplate.

14.11 Ensure that the gasket is not cracked and is flexible. Place the gasket on the baseplate and secure the clamping ring with water collar to the baseplate.

14.12 Place a clean, air-dried porous plate on top of the gauge block.

14.13 Place the guide ring on top of the specimen ring.

14.14 Place the loading plate on top of the porous plate and ensure that the loading plate, porous plate, and gauge block are centered in the specimen ring.

14.15 Slide and center the consolidometer under the loading yoke of the platform scale load frame as shown on figure 8. During centering of the consolidometer, lift the dial gauge spindle to avoid damaging the spindle.

14.16 Ensure that the scale beam pin is in place. Slide the scale beam mass on the scale beam (see fig. 3) to the *Gauge block pressure seating load* obtained in subparagraph 14.8

14.17 Apply the seating load to the loading plate by turning the wheel of the platform scale loading frame clockwise until the scale beam is level. Remove the scale beam pin.

14.18 Ensure that the bottom of the loading yoke is a minimum of 0.1 inch (3 mm) above the top of the water collar of the consolidometer. If it is not, the gauge block seating load must be removed, another loading plate placed on top of the first, and subparagraphs 14.3 through 14.18 repeated until the 0.1-inch (3-mm) minimum clearance requirement is met. Adding another loading plate will only be necessary for the smaller height specimens.

14.19 Ensure that the dial gauge spindle is centered on the loading yoke and is retracted about one-half its travel distance.

14.20 Read the dial gauge and record the value as *Dial reading with seating pressure on gauge block* to the nearest 0.0001 inch (0.003 mm) as shown on line 9 (fig. 6).

14.21 Insert the scale beam pin under the scale beam and release the load on the gauge block by turning the wheel of the platform scale loading frame counterclockwise until the loading yoke lifts off the loading plate.

14.22 Hold the dial gauge spindle and slide the consolidometer from under the loading yoke of the platform scale load frame. Release the dial gauge spindle slowly so as not to damage the gauge.

14.23 Disassemble the consolidometer. Remove the loading plate, guide ring, and upper porous plate. Remove the clamping ring with water collar, specimen ring, and gauge block from the consolidometer baseplate. Leave the lower porous plate in the baseplate of the consolidometer.

14.24 Determine and record the mass of the specimen ring and a pair of cover plates to the nearest 0.1 gram. Record the value as *Mass of specimen ring + cover plates* on line 20 of figure 6 (data sheet 1).

14.25 Prepare the test specimen as described in paragraph 11 and immediately cover the top and bottom of the specimen ring with cover plates if not already done in preparing the specimen.

14.26 Determine the mass of the wet specimen, the specimen ring, and the pair of cover plates to the nearest 0.1 gram. Record the value as *Mass of specimen ring + cover plates + wet soil* on line 21 of figure 6 (data sheet 1).

14.27 Calculate and record *Mass of wet soil* on lines 22 and 36 of figure 6 (data sheet 1).

14.28 Calculate and record *Dry unit weight* of the specimen to the nearest 0.1 lbf/ft^3 on line 27 of figure 6 (data sheet 1). The *Dry unit weight* has a tolerance of ±0.5 percent of the desired dry unit weight for compacted specimens. If the compacted specimen is not within tolerance, return to subparagraph 11.2.1 and compact another specimen.

14.29 Calculate and record to the nearest 0.1 lbm the *Dry tare* (lines 37, 38, and 48), *Wet tare* (line 40), *Specimen seating load* (line 41), and *Wet load* (line 43) in the "Testing loads" and "Seating loads" sections as shown on figure 6.

14.30 *Consolidometer Placement*:

14.30.1 Carefully slide the specimen ring containing the specimen off the bottom cover plate and onto the

7-2417 (3-89) Bureau of Reclamation	ONE-DIMENSIONAL CONSOLIDATION TEST (DATA SHEET 1)	Designation USBR 5705 - 89

Project: Example		Feature: Example
Tested By / Date	Computed By / Date	Checked By / Date
Sample No.: 1		Specimen No.: 1

PHYSICAL PROPERTIES:

Liquid Limit: 47 %	Plasticity Index: 28 %	Shrinkage Limit: %
Specific Gravity (Gs): 2.76		Classification Symbol: CL/CH
Specimen Type: ☐ Undisturbed ☒ Compacted		Type of Test: ☐ Consolidation ☐ Uplift ☒ Expansion

(1) Load Frame No.	9	(3) Gauge Block No.	1
(2) Specimen Ring No.	232	(4) Gauge Block Height	1.25 ☒ in ☐ cm
(5) Specimen Ring Diameter			4.25 ☒ in ☐ cm
(6) Specimen Ring Area = $(5)^2 \frac{\pi}{4}$			14.19 ☒ in^2 ☐ cm^2
(7) Specimen Ring Height			1.25 ☒ in ☐ cm
(8) Specimen Ring Volume = (6) (7)			17.74 ☒ in^3 ☐ cm^3
(9) Dial Reading With Seating Pressure on Gauge Block			0.5224 ☒ in ☐ cm
(10) Dial Reading With Seating Pressure on Specimen			0.5120 ☒ in ☐ cm
(11) Initial Specimen Height = (4) - (9) + (10)			1.2396 ☒ in ☐ cm
(12) Equivalent Height of Solids = (26) / [(6) $G_s \rho_w$] C [1/]			0.8679 ☒ in ☐ cm

MOISTURE CONTENT DETERMINATION OF SPECIMEN

		INITIAL	FINAL
(13) Drying Pan Number		12	68
(14) Mass of Drying Pan	g	236.8	319.4
(15) Mass of Drying Pan + Wet Specimen	g	503.1	968.0
(16) Mass of Drying Pan + Dry Specimen	g	487.8	871.4
(17) Mass of Water (15) - (16)	g	15.3	96.6
(18) Mass of Dry Specimen = (16) - (14)	g	251.0	552.0
(19) Moisture Content = [(17) / (18)] x 100	%	6.1	17.5

INITIAL WET MASS DETERMINATION OF SPECIMEN

(20) Mass if Specimen Ring + Cover Plates	g	1112.0
(21) Mass of Specimen Ring + Cover Plate + Wet Soil	g	1701.7
(22) Mass of Wet Soil = (21) - (20)	g	589.7

DRY UNIT WEIGHT OF SPECIMEN

(23) Mass of Wet Soil = (22)	g	589.7
(24) Initial Moisture Content = (19)	%	6.1
(25) Specimen Ring Volume = (8)	☒ in^3 ☐ cm^3	17.74
(26) Mass of Dry Soil = (23) / [1 + (24) / 100]	g	555.8
(27) Dry Unit Weight = [(26) / (25)] C [2/]	☒ lbf/ft^3 ☐ kN/m^3	119.4

1/ ρ_w is the density of water at 71.5 F. For inch pound applications ρ_w = 62.29 lbm/ft^3 For SI metric applications ρ_w = 1 g/cm^3
C is a conversion factor, for inch-pound applications C = 3.8095. For SI metric applications C = 1.000.

2/ For inch pound application, C = 3.8095 and converts g/in^3 to lbf/ft^3 assuming lbf = lbm. For SI metric application, C = 9.807 and converts g/cm^3 to kN/m^3

Figure 6. - One-dimensional conoslidation test (data sheet 1) — expansion test example.

DRY MASS DETERMINATION OF WASHINGS		
(28) Drying Pan Number		12
(29) Mass of Drying Pan	g	236.8
(30) Mass of Dry Washings + Drying Pan	g	237.4
(31) Mass of Dry Washings = (30) - (29)	g	0.6
FINAL DRY MASS OF SOIL		
(32) Mass of Dry Specimen (Final) = (18)	g	552.0
(33) Mass of Dry Washings = (31)	g	0.6
(34) Final Dry Mass of Soil = (32) + (33)	g	552.6

TESTING LOADS				SEATING LOADS			
(35) Equipment Mass	21.0	[X] lbm	[ ] g	With Gauge Block			
(36) Mass of Wet Soil	1.3	[X] lbm	[ ] g	(44) Equipment Mass (35)	21.0	[X] lbm	[ ] g
(37) Dry Tare = (35) + (36)	22.3	[X] lbm	[ ] g	(45) Gauge Block Mass	5.0	[X] lbm	[ ] g
(38) Dry Tare = (37)	22.3	[X] lbm	[ ] g	(46) Mass For Seating Load	14.2	[X] lbm	[ ] g
(39) Water Added	0.5	[X] lbm	[ ] g	(47) Gauge Block Pressure Seating Load	40.2	[X] lbm	[ ] g
(40) Wet Tare = (38) + (39)	22.8	[X] lbm	[ ] g	With Test Specimen			
(41) Specimen Seating Load = (50)	36.5	[X] lbm	[ ] g	(48) Dry Tare = (37)	22.3	[X] lbm	[ ] g
(42) Water Added (39)	0.5	[X] lbm	[ ] g	(49) Mass For Seating Load = (46)	14.2	[X] lbm	[ ] g
(43) Wet Load = (41) + (42)	37.0	[X] lbm	[ ] g	(50) Specimen Seating Load = (48) + (49)	36.5	[X] lbm	[ ] g

Remarks:

Figure 6. - One-dimensional conoslidation test (data sheet 1) — expansion test example—Continued.

7-2418 (3-89)
Bureau of Reclamation

ONE-DIMENSIONAL CONSOLIDATION TEST (DATA SHEET 2)

Designation USBR 5705 - 89

Tested By ____ Date ____ Computed By ____ Date ____ Checked By ____ Date ____

Sample No. 1 Specimen No. 1

Load Frame No. 9 Specimen Ring No. 232

Type of Test ☐ Consolidation ☒ Expansion ☐ Uplift

DATE	TIME sec.	DESIRED PRESSURE ☒ lbf/in² ☐ kPa	☒ MASS REQ. ☐ DEFORMATION CORRECTION ☒ lbm ☐ N	PLF GAUGE NO.	PLF GAUGE READING	DIAL/LVDT GAUGE READING 1/ ☒ in ☐ cm	HEIGHT OF SPECIMEN ☒ in ☐ cm	AXIAL STRAIN %	VOID RATIO
(1)	(2)	(3)	(4)	(5)	(6)	(7)	(8)	(9)	(10)
6/5	4	1.0	36.5			0.5120	1.2396	0.00	0.4283
6/6	86,400	1.0	36.5			0.5120	1.2396	0.00	0.4283
	4	1.0 *	37.0			0.5125	1.2401	-0.04	0.4289
	300	1.0	37.0			0.5264	1.2540	-1.16	0.4449
	900	1.0	37.0			0.5791	1.3067	-5.41	0.5056
	1800	1.0	37.0			0.6235	1.3511	-8.99	0.5567
	3600	1.0	37.0			0.6300	1.3576	-9.52	0.5642
	7200	1.0	37.0			0.6351	1.3627	-9.93	0.5701
	18,000	1.0	37.0			0.6358	1.3634	-9.99	0.5709
6/7	86,400	1.0	37.0			0.6370	1.3646	-10.08	0.5723
	4	2.0	51.2			0.6358	1.3634	-9.99	0.5709
	7200	2.0	51.2			0.6338	1.3614	-9.83	0.5686
	18,000	2.0	51.2			0.6336	1.3612	-9.81	0.5684
6/8	86,400	2.0	51.2			0.6332	1.3608	-9.78	0.5679
	4	4.0	79.6			0.6295	1.3571	-9.48	0.5637
	7200	4.0	79.6			0.6203	1.3479	-8.74	0.5531
	18,000	4.0	79.6			0.6200	1.3476	-8.71	0.5527
6/9	86,400	4.0	79.6			0.6196	1.3472	-8.68	0.5523
	4	8.0	136.3			0.6147	1.3423	-8.28	0.5466
	7200	8.0	136.3			0.6055	1.3331	-7.54	0.5360
	18,000	8.0	136.3			0.6010	1.3286	-7.18	0.5308
6/10	86,400	8.0	136.3			0.6002	1.3278	-7.12	0.5299
	4	16.0	249.8			0.5929	1.3205	-6.53	0.5215
	7200	16.0	249.8			0.5745	1.3021	-5.04	0.5003
	18,000	16.0	249.8			0.5739	1.3015	-4.99	0.4996
6/11	86,400	16.0	249.8			0.5736	1.3012	-4.97	0.4993
	4	32.0	476.9			0.5640	1.2916	-4.19	0.4882
	7200	32.0	476.9			0.5517	1.2793	-3.20	0.4740

* Indicates when specimen was wetted

1/ Adjusted for deformation correction

Sheet 1 of 2

Figure 7. – One-dimensional consolidation test (data sheet 2) — expansion test example.

7-2418 (3-89) Bureau of Reclamation	ONE-DIMENSIONAL CONSOLIDATION TEST (DATA SHEET 2)	Designation USBR 5705 - 89

Tested By	Date	Computed By	Date	Checked By	Date

Sample No. 1	Specimen No. 1
Load Frame No. 9	Specimen Ring No. 232

Type of Test ☐ Consolidation ☒ Expansion ☐ Uplift

DATE	TIME sec.	DESIRED PRESSURE ☒ lbf/in² ☐ kPa	☒ MASS REQ. ☐ DEFORMATION CORRECTION ☒ lbm ☐ N	PLF GAUGE NO.	PLF GAUGE READING	DIAL/LVDT GAUGE READING 1/ ☒ in ☐ cm	HEIGHT OF SPECIMEN ☒ in ☐ cm	AXIAL STRAIN %	VOID RATIO
(1)	(2)	(3)	(4)	(5)	(6)	(7)	(8)	(9)	(10)
6/11	18,000	32.0	476.9			0.5420	1.2696	-2.42	0.4628
6/12	86,400	32.0	476.9			0.5415	1.2691	-2.38	0.4623
	4	64.0	931.0			0.5294	1.2570	-1.40	0.4483
	7200	64.0	931.0			0.5186	1.2462	-0.53	0.4359
	18,000	64.0	931.0			0.5120	1.2396	0.00	0.4283

* Indicates when specimen was wetted

1/ Adjusted for deformation correction

Sheet 2 of 2

Figure 7. - One-dimensional consolidation test (data sheet 2) — expansion test example—Continued.

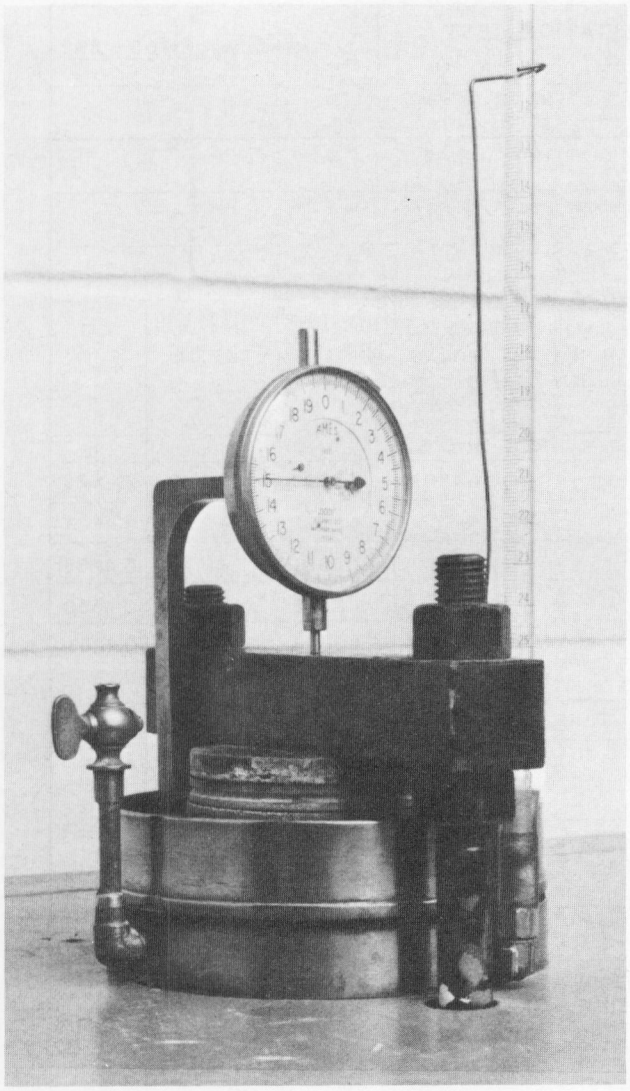

Figure 8. – Fixed-ring consolidometer with specimen placed in load frame.

bottom porous plate in the baseplate of the consolidometer. Remove the top cover plate from the specimen and specimen ring.

NOTE 2.–If the specimen is loose or contains a large percentage of sand, an alternate method for placement is recommended as follows: With the cover plates securely in place, invert the specimen. Carefully remove the bottom cover plate, invert the baseplate and place over the specimen ring, carefully turn the assembly right side up. Remove the top cover plate. This technique helps prevent possible loss of material and helps to ensure a level bottom surface.

14.30.2 Place the upper porous plate on top of the specimen.

14.30.3 Ensure that the gasket is not cracked and is flexible.

14.30.4 Place the gasket on the baseplate and secure the clamping ring with water collar to the baseplate. Ensure that the screws are tight to prevent waterflow between the baseplate and clamping ring.

14.30.5 Place the guide ring on top of the specimen ring.

14.30.6 Place a loading plate(s) (see subpar. 14.18) on top of the porous plate.

14.30.7 Lift the dial gauge spindle and slide and center the consolidometer under the loading yoke of the platform scale loading frame (shown on fig. 8) and attach the permeameter tube to the baseplate of the consolidometer. Lower and center the dial gauge spindle on top of the loading yoke.

14.31 *Initial Specimen Height Determination*:

14.31.1 Ensure that the scale beam pin is in place. Move the scale beam mass on the scale beam to the *Specimen seating load* (calculated in subpar. 14.29). Record to the nearest 0.1 lbm the *Specimen seating load*, in column 4, *Mass required*, on figure 7 (data sheet 2).

14.31.2 Balance the scale beam by turning the wheel of the platform scale loading frame until the scale beam is just removed from the scale beam pin. When applied and balanced, the *Specimen seating load* exerts the *Mass for seating load* on the specimen. Determine and record to the nearest 0.0001 in (0.003 mm) the dial gauge reading as *Dial reading with seating pressure on specimen* as shown on line 10 of figure 6 (data sheet 1).

14.31.3 Record the *Date, Time,* and the *Dial gauge reading* for the seating load in columns 1, 2, and 7 as shown on figure 7 (data sheet 2).

14.31.4 Leave the seating load on the specimen according to the testing program. Ensure that the scale beam is level by turning the wheel as necessary prior to taking a dial gauge reading. Record the date and time, and the dial gauge readings as required.

14.31.5 If time limit is not specified, leave the seating load on the specimen overnight and record the readings the following day.

14.31.6 Calculate and record to the nearest 0.0001 inch (0.003 mm) the *Initial specimen height* and the *Equivalent height of solids* as shown on lines 11 and 12 of figure 6 (data sheet 1).

14.31.7 Calculate and record to the nearest 0.0001 inch (0.003 mm) the *Height of specimen* and to the nearest 0.01 percent the *Axial strain* as shown on lines 8 and 9 of figure 7 (data sheet 2) for each dial gauge reading.

NOTE 3.–Certain circumstances may dictate the need to allow the specimen to expand under a pressure other than 1 lbf/in^2. The mass required to exert the desired pressure is calculated and specimen placement, initial height determination, and expansion procedure are the same as for the 1-lbf/in^2.

14.32 *Specimen Wetting*:

14.32.1 Record in columns 3 and 4 as shown on figure 7 (data sheet 2) the *Desired pressure* to the nearest 0.1 lbf/in^2 and the *Mass required* to the nearest 0.1 lbm to exert that pressure at which the specimen is to be wetted.

The *Desired pressure* is the same pressure as was used for the specimen seating load, if not stated otherwise in the testing program. The *Mass required* is the *Wet load* calculated in subparagraph 14.29.

14.32.2 Insert the scale beam pin. Move the scale beam mass on the scale beam to the *Mass required* as recorded in subparagraph 14.32.1.

14.32.3 Attach plastic tubing to the open drain cock (as shown on fig. 1) and lead the tubing to an overflow container.

CAUTION.–The overflow container, or any other object, should not be placed on the platform scale load frame at any time during the test.

14.32.4 Add water (see subpars. 5.4.4 and 9.1), which is at room temperature, to the permeameter tube using a pipette and bulb.

14.32.5 Allow water to flow through the bottom porous plate and out the drain cock until air bubbles no longer appear in the outflow.

14.32.6 With water in the permeameter tube—level with or slightly above the top of the drain cock—close the drain cock and remove the plastic tubing.

14.32.7 Continue to adjust the wheel of the platform scale load frame so the scale beam remains just removed from the lower scale beam pin.

14.32.8 Keep the head of water in the permeameter tube at least level with the top of the drain cock to prevent air entrapment in the consolidometer but as low as possible to prevent "piping" and uplift in low unit weight soils.

14.32.9 Continue to add water to the permeameter tube to maintain the desired head until water begins to come through the upper porous plate or until 5 minutes have elapsed.

14.32.10 Submerge the specimen by filling the water collar with tap water at room temperature to just below the rim of the water collar and ensure that it remains at that level throughout the test.

14.33 *Specimen Expansion*:

14.33.1 Allow the wetted specimen to expand for a minimum of 48 hours. Determine and record dial gauge readings at the time intervals specified in subparagraph 14.33.3.

NOTE 4.–Very plastic clays may require a week or more to complete the expansion phase of the procedure.

14.33.2 Maintain the load on the specimen by turning the wheel to again level the scale beam.

14.33.3 Record the *date* and *time*, and the *dial gauge reading* at time intervals of 4, 300, 900, 1,800, 3,600, 7,200, 18,000, and 86,400 seconds for the first 24 hours (4 seconds, 5-, 15-, 30-min.; 1-, 2-, 5-, 24-hours) of the test as shown in columns 1, 2, and 7 on figure 7 (data sheet 2). Level the scale beam before taking each dial gauge reading by using the wheel on the platform scale loading frame.

NOTE 5.–Additional readings may be taken if desired or as requested in the testing program.

14.33.4 Calculate and record to the nearest 0.0001 inch (0.003 mm) the *Height of specimen*, and to the nearest 0.01 percent the *Axial strain* as shown in columns 8 and 9 on figure 7 (data sheet 2) for each dial gauge reading.

14.33.5 As a guideline, allow the specimen to expand until the change in axial strain becomes less than 0.1 percent between consecutive readings. Continue to record the date and time, and dial gauge readings daily or as necessary; calculate and record *Height of specimen* and *Axial strain* as shown in columns 8 and 9 on figure 7 (data sheet 2).

NOTE 6.–It may be advantageous to plot *Axial strain* versus log time for expansive soils. The plot may be helpful in indicating whether expansion is complete by showing a change in slope of the resulting curve.

14.33.6 Ensure that the water level remains just below the rim of the water collar throughout the test.

14.34 *Load Application*.–After primary expansion is complete, the specimen is loaded to compress it back to its original void ratio (height). This is accomplished by continuously doubling the preceding pressure applied to the specimen until the specimen is at its initial height or slightly less.

14.34.1 The new *Desired pressure* will be obtained by doubling the previous *Desired pressure*. For example: to begin compression of the specimen, the initial *Desired pressure* used for seating and wetting the specimen will be doubled. Record the new *Desired pressure* to the nearest 0.1 lbf/in^2 as shown in column 3 on figure 7 (data sheet 2).

14.34.2 Calculate and record the *Mass required* to the nearest 0.1 lbm necessary to exert the *Desired pressure* on the test specimen as shown in column 3 on figure 7 (data sheet 2).

14.34.3 Insert the scale beam pin and rest the scale beam on the pin by turning the wheel of the platform scale load frame (fig. 3).

14.34.4 Move the scale beam mass on the scale beam and add mass to the hanger, if necessary, until the total mass equals the calculated mass (from subpar. 14.34.2) for the *Desired pressure*.

14.34.5 Turn the wheel of the platform scale load frame until the scale beam is level and not resting on the pin. Remove the scale beam pin and begin the timer.

14.34.6 On figure 7, columns 1 and 2, (data sheet 2), record the *date* and *time* of each reading. Record in column 7 (fig. 7) *dial gauge reading* at time intervals of 4, 7,200, 18,000, and 86,400 seconds (4 seconds; 2-, 5-, and 24-hours), unless otherwise stated on the testing program.

14.34.7 Compare the dial gauge readings obtained at the 5- and 24-hour readings. If the dial gauge has moved more than 0.001 inch (0.03 mm) between the 5- and 24-hour reading, leave the test specimen at the same pressure for another 24 hours and continue to read and record the dial gauge reading. If the dial gauge has moved less than 0.001 inch (0.03 mm), between the first 5- and 24-hour reading or any consecutive 24-hour readings, the load is complete.

14.34.7.1 Calculate and record the *Height of specimen* and the *Axial strain* for each dial gauge reading as shown in colums 8 and 9 on figure 7 (data sheet 2).

14.34.8 If the specimen has been compressed back to or beyond *Initial specimen height* go to subparagraph 14.35, and if not, repeat subparagraphs 14.34.1 through 14.34.7.

14.35 *Specimen Removal*:

14.35.1 Insert the scale beam pin under the scale beam of the platform scale loading frame. Remove any mass from the hanger and return the scale beam mass to the zero position.

14.35.2 Drain the water from the water collar, using a pipette and bulb, and remove the permeameter tube from the consolidometer baseplate.

14.35.3 Turn the wheel of the platform scale loading frame until the loading yoke lifts off of the loading plate.

14.35.4 Slide the consolidometer from beneath the loading yoke. Care should be taken with the dial gauge spindle to ensure that it is released slowly as it comes off the loading yoke.

14.35.5 Remove the screws from the consolidometer clamping ring and quickly remove, in the following order: loading plates, guide ring, clamping ring with water collar, gasket, and specimen ring with specimen and porous plates from the baseplate.

14.35.6 Remove the porous plates from the specimen and drain free water into a drying pan whose mass was previously determined and recorded on line 29 of figure 6 (data sheet 1).

14.35.7 Place the loading plate on top of the specimen and press the specimen out of the specimen ring into another drying pan whose mass was previously determined and recorded on line 14 of figure 6 (data sheet 1).

14.35.8 Determine and record the *Mass of the drying pan + wet specimen* to the nearest 0.1 gram as shown on line 15 of figure 6 (data sheet 1).

14.35.9 Photograph the top of the specimen (fig. 9a). Break the specimen in half and photograph the broken faces of the specimen as shown on figure 9b. Return all specimen pieces to the drying pan and determine the final moisture content of the entire specimen in accordance with USBR 5300. Record calculations on figure 6 (data sheet 1).

14.35.10 Wash any soil from the porous plates, specimen ring, guide ring, and loading plate using a squeeze bottle filled with tapwater. Catch the wash water in the drying pan used in subparagraph 14.35.6.

14.35.11 If possible place the drying pan in a separate drying oven overnight. Evaporation of the large amount of free water in the washings may result in inaccurate final moistures if the washings are placed in the same oven as the specimen. Determine and record on line 30 of figure 6 (data sheet 1) *Mass of the dry washings + drying pan* to the nearest 0.1 gram.

14.35.12 Scrub the porous plates in running water using a soft nylon brush. Unless the porous plates are cleaned after each test, they become clogged with soil particles and slow the flow of water to or from the specimen.

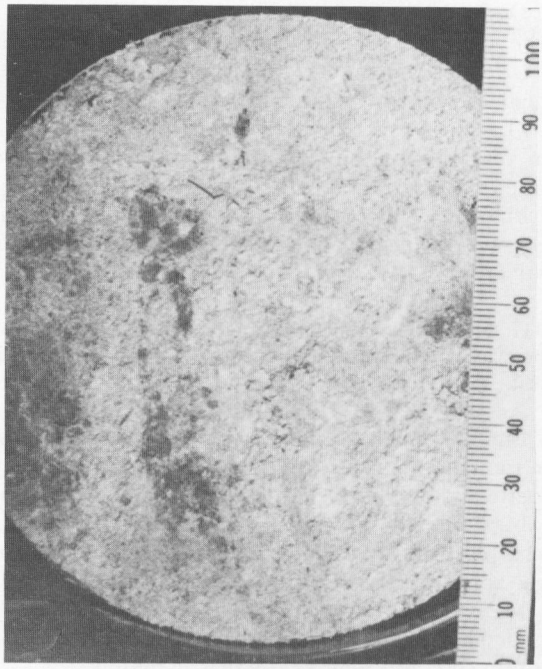

a. Top view of test specimen.

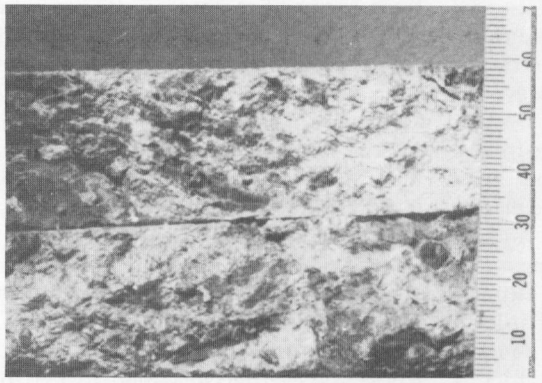

b. Edge view of test specimen.

Figure 9. – Views of test specimen.

14.35.13 Determine the *Final dry mass of soil* and record the value as shown on line 34 of figure 6 (data sheet 1).

14.35.14 Prepare a plot of axial strain versus pressure as shown on figure 10.

14.35.15 From the plot on figure 10, read the *Pressure required to return to initial height* and record on figure 11. This value is obtained from taking the difference between the pressure at which the specimen was wet and where the specimen loading line crosses the zero axial strain axis.

14.35.16 Prepare a summary table of one-dimensional expansion test results as shown on figure 11.

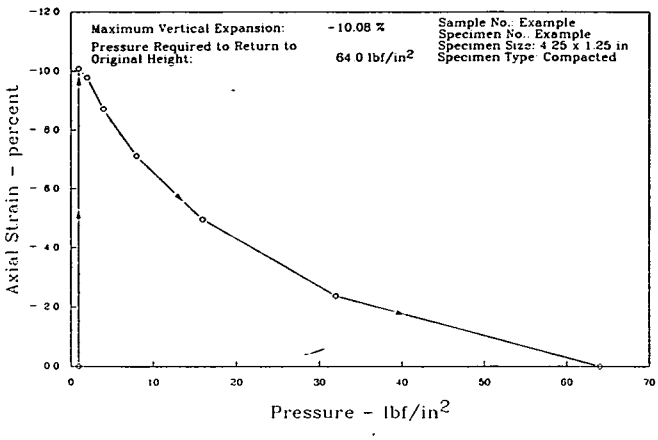

Figure 10. - Plot of test results — example.

All data are from figures 6 and 7, data sheets 1 and 2, respectively, or calculated in paragraph 15.

15. Calculations

15.1 Calculate *Specimen ring area* using the nominal specimen ring diameter as shown on line 6 of figure 6 (data sheet 1).

$$A = \frac{\pi D^2}{4} \quad (1)$$

where:
A = nominal specimen ring area, in²
D = specimen ring inside diameter, in
π = 3.14

15.2 Calculate mass required to exert desired load on the soil specimen as shown on line 49 of figure 6 (data sheet 1).

$$m_b = A\,P_d\,C + T \quad (2)$$

where:
m_b = mass required to exert desired load, lbm
A = nominal specimen area, in²
P_d = desired pressure, lbf/in²
T = tare mass,* lbm
C = 1 lbm/lbf

* Use the value calculated for *Dry tare* before the specimen is wetted; after wetting, use the calculated value of *Wet tare*. When calculating the mass necessary for the gauge block seating load, $T = 0$.

15.3 Calculate *Gauge block pressure seating load* as shown on line 47 of figure 6 (data sheet 1).

$$m_g = m_e + m_{gb} + m_b \quad (3)$$

where:
m_g = gauge block pressure seating load, lbm
m_e = mass of equipment (consolidometer), lbm
m_{gb} = mass of gauge block, lbm
m_b = mass required to exert desired seating load, lbm

15.4 Calculate *Initial moisture content* as shown on line 19 of figure 6 (data sheet 1).

15.5 Calculate *Mass of the wet soil* on line 36 of figure 6 (data sheet 1).

$$m_w = \frac{m_x - m_y}{453.6} \quad (4)$$

where:
m_w = mass of wet soil, lbm
m_x = mass of specimen ring, cover plates, and wet soil, g
m_y = mass of specimen ring and cover plates, g
453.6 = change gram to pound mass

15.6 Calculate *Dry tare* as shown on lines 37, 38, and 48 of figure 6 (data sheet 1).

$$T_d = m_e + m_w \quad (5)$$

where:
T_d = dry tare mass, lbm
m_e = mass of equipment (consolidometer), lbm
m_w = mass of wet specimen, lbm

15.7 Calculate *Wet tare* as shown on line 40 of figure 6 (data sheet 1).

$$T_w = T_d + W_m \quad (6)$$

where:
T_w = wet tare mass, lbm
T_d = dry tare mass, lbm
W_m = mass of water added to wet the specimen (Use 0.5 lbm for 4.25-inch diameter specimen or 1.0 lbm for 2.00-inch diameter specimen.)

15.8 Calculate *Specimen seating load* as shown on lines 41 and 50 of figure 6 (data sheet 1).

$$m_s = T_d + m_b \quad (7)$$

where:
m_s = specimen seating load, lbm
T_d = dry tare mass, lbm
m_b = mass required to exert desired seating load, lbm

15.9 Calculate *Wet load* as shown on line 43 of figure 6 (data sheet 1).

$$W_L = m_s + W_m \quad (8)$$

where:
W_L = wet load, lbm
m_s = specimen seating load, lbm
W_m = mass of water added to wet the specimen, lbm

15.10 Calculate height(s) of specimen.

15.10.1 *Initial specimen height* as shown on line 11 of figure 6 (data sheet 1).

$$H_i = H_{gb} - R_{gb} + R_i \quad (9)$$

where:
H_i = initial specimen height, in
H_{gb} = height of gauge block, in
R_{gb} = dial gauge reading on the gauge block, in
R_i = initial dial gauge reading on the specimen, in

15.10.2 Determination of all other heights as shown in column 8 of figure 7 (data sheet 2).

$$H = H_i - R_i + R_2 \quad (10)$$

where:
H = specimen height at any reading, in
H_i = initial height of specimen, in
R_i = initial dial gauge reading on the specimen, in
R_2 = current dial gauge reading, in

15.11 Calculate *Mass of dry soil* on line 26 of figure 6 (data sheet 1).

$$m_d = \left(\frac{m_w}{1 + w}\right) \quad (11)$$

where:
m_d = mass of dry soil, lbm
m_w = mass of wet specimen, lbm
w = initial moisture content, expressed as a decimal

15.12 Calculate *Equivalent height of solids* in the specimen on line 12 of figure 6 (data sheet 1).

$$H_s = C\left(\frac{m_d}{A\, G_s\, \rho_w}\right) \quad (12)$$

where:
H_s = equivalent height of solids, in
m_d = mass of dry soil, g
A = nominal specimen area, in^2
G_s = specific gravity of soil
ρ_w = density of water = 62.29 lbm/ft^3 at 71.5 °F
C = 3.8095 changes ft^3 to in^3 and lbm to g

15.13 Calculate *Axial strain* (percent) in column 9 of figure 7 (data sheet 2).

$$\epsilon = 100\left(1 - \frac{H}{H_i}\right) \quad (13)$$

where:
ϵ = axial strain, %
H_i = initial height of specimen, in
H = specimen height at any reading, in
100 = convert from decimal to percent

15.14 Calculate *Pressure* for a given mass in column 3 of figure 7 (data sheet 2).

$$P = C\left(\frac{m_b - T_w}{A}\right) \quad (14)$$

where:
P = pressure on specimen (desired pressure), lbf/in^2
m_b = mass on the scale beam and hanger, lbm
T_w = wet tare mass, lbm
A = nominal specimen area, in^2
C = 1 lbf/lbm (convert density to unit weight)

15.15 Calculate *Void ratio* in column 10 of figure 7 (data sheet 2).

$$e = \frac{H}{H_s} - 1 \quad (15)$$

where:
e = void ratio of specimen
H = specimen height at any reading, in
H_s = equivalent height of solids, in

15.16 Calculate *Dry unit weight* of the specimen at any reading in column 4 of figure 11.

$$\rho_d = C\left(\frac{m_d}{HA}\right) \quad (16)$$

where:
ρ_d = dry density of specimen, lb/ft^3
m_d = mass of dry soil, lbm
H = specimen height at any reading, in
A = nominal specimen area, in^2
C = 1,728 changes from in^3 to ft^3

$$\gamma_d = \rho_d C^* \quad (17)$$

where:
γ_d = dry unit weight, lbf/ft^3
C^* = 1 lbf/lbm (convert density to unit weight)

16. Report

16.1 The report is to consist of completed and checked:
"One-Dimensional Consolidation Test" forms (figs. 6 and 7) data sheets 1 and 2, respectively.
Photographs of the test specimen (fig. 9).
"Axial Strain–Pressure" plot (fig. 10) with a table: "Summary of One-Dimensional Consolidation Test" results (fig. 11).

16.2 All calculations are to show a checkmark and all plotting must be checked.

7-2419 (3-89) Bureau of Reclamation	SUMMARY OF ONE-DIMENSIONAL CONSOLIDATION TEST	Designation USBR 5705 - 89

Project	Example	Feature	Example
Sample No.	1	Specimen	1

Type of Test ☐ Consolidation ☒ Expansion ☐ Uplift

PRESSURE ☒ lbf/in^2 ☐ kPa	SPECIMEN HEIGHT ☒ in ☐ mm	VOID RATIO	DRY UNIT WEIGHT ☒ lbf/ft^3 ☐ kN/m^3	AXIAL STRAIN + Θ (%)
(1)	(2)	(3)	(4)	(5)
1.0	1.2396	0.4283	120.3	0.00
1.0	1.3646	0.5723	109.2	10.08
2.0	1.3608	0.5679	109.5	9.78
4.0	1.3472	0.5523	110.7	8.68
8.0	1.3278	0.5299	112.3	7.12
16.0	1.3012	0.4993	114.6	4.97
32.0	1.2691	0.4623	117.5	2.38
64.0	1.2396	0.4283	120.3	0.00

TEST SPECIMEN CONDITIONS	INITIAL	MAX. PRESSURE	FINAL
Dry Unit Weight ☒ lbf/ft^3 ☐ kN/m^3	120.3	——	120.3
Moisture Content %	6.1	——	17.5
Degree of Saturation %	38.2	——	100.0
Dry Mass ☐ lbf ☒ g	555.8	——	552.0

Maximum Vertical Expansion	− 10.08 %	Rebound	—— %
Pressure Required to Return to Initial Height	64.0 ☒ lbf/in^2 ☐ kPa	Equivalent Height of Solids	0.8679 ☒ in ☐ mm

Figure 11. – Summary of one-dimensional consolidation test — expansion test example.

APPENDIX

X1. CALIBRATING THE CONSOLIDOMETER SPECIMEN RING

X1.1 Scope

X1.1.1 This appendix outlines the procedure for calibrating the specimen rings as described in subparagraph 8.2.2.1 of this designation.

X1.2 Significance and Use

X1.2.1 Specimen rings must be calibrated to ensure accurate laboratory test results. Specimen rings not within specified tolerance can result in specimen placement unit weights that can vary by ±0.5 percent or more. This calibration procedure is to be performed upon receipt of the specimen ring and annually thereafter or if the volume of the specimen ring is in question.

X1.3 Procedure

X1.3.1 For a 4.250-inch diameter by 1.25-inch high specimen ring, two calibration plugs are used—one 4.240± 0.001-inch diameter and the other 4.260±0.001-inch diameter; each have a height of 1.25 inches. For a 2.000-inch diameter by 0.75-inch high specimen ring, two calibration plugs—one 1.995±0.001-inch diameter and the other 2.005± 0.001-inch diameter—each have a height of 0.75 inch.

X1.3.2 Attempt to insert the minimum diameter calibration plug into the specimen ring. If the *minimum dia. calibration plug* can be inserted into the specimen ring place a checkmark in the "Yes" column as shown on figure X1.1.

X1.3.3 Repeat subparagraph X1.3.2 using the maximum diameter calibration plug instead of the minimum diameter calibration plug.

X1.3.4 If there is a checkmark in the "YES" column below the *Insert minimum dia. calibration plug* and in the "NO" column below the *Insert maximum dia. calibration plug* place a checkmark in the "*Accepted YES/NO*" column. If this condition does not exist then place a checkmark in the "*Rejected Yes/Yes, No/Yes, No/No*" column.

X1.3.5 The specimen ring is accepted if the minimum diameter calibration plug will insert into the specimen ring but the maximum diameter calibration plug will not. If these criteria are not met the specimen ring should be discarded or remachined if appropriate.

X1.3.6 Specimen rings are to be calibrated annually and results recorded on the "Specimen Ring Calibration" form (fig. X1.1). Specimen rings also should be calibrated whenever they may have been damaged.

X1.4 Interpret Results

X1.4.1 If the specimen rings are accepted, nominal dimensions will be used for all specimen area and volume calculations. If the specimen rings are rejected, they are to be remachined if possible or discarded and replaced with acceptable specimen rings. Results recorded on the "Specimen Ring Calibration" form should be filed in the laboratory calibration book corresponding to the one-dimensional expansion test.

7-2415 (3-89) Bureau of Reclamation	SPECIMEN RING CALIBRATION	Designation USBR 5705 - 89
Calibrated by	Date	Next Calibration Date
Specimen Ring Diameter 4.25 ☒ in ☐ mm	Specimen Ring Height 1.25 ☒ in ☐ mm	
Minimum Calibration Plug No. 1	Minimum Calibration Plug Dia. 4.240 ☒ in ☐ mm	
Maximum Calibration Plug No. 2	Maximum Calibration Plug Dia. 4.260 ☒ in ☐ mm	

SPECIMEN RING NO.	INSERT MINIMUM CALIBRATION PLUG YES	INSERT MINIMUM CALIBRATION PLUG NO	INSERT MAXIMUM CALIBRATION PLUG YES	INSERT MAXIMUM CALIBRATION PLUG NO	ACCEPTED YES/NO	REJECTED YES/YES NO/NO
232	✓			✓	✓	
116		✓		✓		✓
114	✓			✓	✓	
108	✓			✓	✓	
122	✓			✓	✓	

Figure X1.1 – Specimen ring calibration — example.

UNITED STATES DEPARTMENT OF THE INTERIOR
BUREAU OF RECLAMATION

USBR 5715-89

PROCEDURE FOR

DETERMINING THE ONE-DIMENSIONAL UPLIFT PROPERTIES OF SOILS

INTRODUCTION

This procedure is under the jurisdiction of the Geotechnical Services Branch, code D-3760, Research and Laboratory Services Division, Denver Office, Denver, Colorado. The procedure is issued under the fixed designation USBR 5715. The number immediately following the designation indicates the year of acceptance of the last revision.

1. Scope

1.1 This designation outlines the procedure for determining the one-dimensional uplift properties of soils. The procedure can be performed using undisturbed or compacted specimens to determine (1) the magnitude of axial pressure required to maintain the initial void ratio (height) of a wetted, laterally constrained, axially loaded specimen, and (2) the magnitude of expansion after wetting under known axial pressures.

2. Auxiliary Tests

2.1 If the test is to be performed using a compacted specimen, a soil sample must be obtained in accordance with USBR 5205. The initial and final moisture contents of the test specimen are to be determined in accordance with USBR 5300. The specific gravity of the soil must be determined in accordance with USBR 5320 in order to calculate the height of solids in the test specimen. The specimen must be prepared in accordance with USBR 5210 or 5215 prior to performing this procedure. The gradation analysis, liquid limit, plastic limit, and shrinkage limit of the soil sample are to be determined in accordance with USBR 5330, 5350, 5360, and 5365, respectively.

3. Applicable Documents

3.1 *USBR Procedures*:
USBR 1000 Standards for Linear Measurement Device
USBR 1007 Calibrating Dial Indicators
USBR 1009 Calibrating Compaction Molds
USBR 1012 Calibrating Balances or Scales
USBR 5205 Preparing Soil Samples by Splitting or Quartering
USBR 5210 Preparing Compacted Soil Specimens for Laboratory Use
USBR 5215 Preparing Soil Specimens for Laboratory Use From Undisturbed Samples
USBR 5300 Determining Moisture Content of Soil and Rock by the Oven Method
USBR 5320 Determining Specific Gravity of Soils
USBR 5330 Performing Gradation Analysis of Fines and Sand Size Fraction of Soils, Including Hydrometer Analysis
USBR 5350 Determining the Liquid Limit of Soils by the One-Point Method
USBR 5360 Determining the Plastic Limit and Plasticity Index of Soils
USBR 5365 Determining Shrinkage Limit and Shrinkage Ratio of Soils
USBR 5700 Determining the One-Dimensional Consolidation Properties of Soils (Incremental Stress)

4. Summary of Method

4.1 A compacted or undisturbed soil specimen is prepared and placed in a fixed-ring consolidometer as shown on figure 1. A seating pressure, normally 1 lbf/in^2, is applied to the specimen. The initial height of the specimen is determined, and the specimen is inundated with water. As the specimen expands, sufficient pressure is applied to maintain the initial void ratio (height). This is continued until equilibrium is established; i.e., additional pressure is not required to maintain initial specimen height (see fig. 2). Pressure on the specimen is then decreased in selected decrements and specimen height is measured at each pressure decrement, after a minimum of 24 hours or until expansion is complete under that loading.

5. Significance and Use

5.1 The relative uplift (expansion) potential determined from this procedure can be used to estimate heave of a foundation or compacted earthwork for a given final moisture and loading condition. The initial moisture content and void ratio of the test specimen should be representative of anticipated in-place soil condition.

5.2 Soils containing the clay mineral *montmorillonite* are likely to have significant potential for uplift (expansion) and are commonly tested by this procedure.

5.3 Laboratory prepared test specimens should duplicate the in-place soil or field compacted soil conditions as closely as possible because relatively small variations in unit weight and moisture content can significantly alter uplift (expansion) characteristics of the specimen.

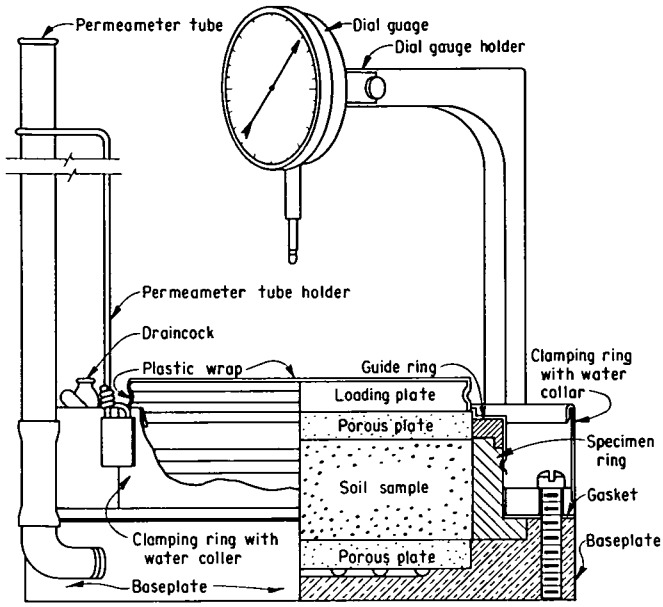

Figure 1. - Schematic of fixed-ring consolidometer.

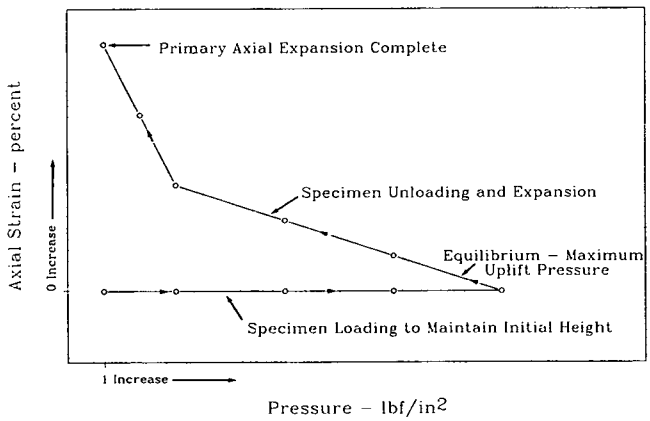

Figure 2. - Schematic of one-dimensional uplift test.

Differences in soil fabric of compacted specimens, such as obtained by kneading or static compaction, also can have a significant impact on the uplift (expansive) behavior of cohesive soils.

5.4 Estimates of the uplift (expansion) characteristics of soil obtained from this procedure are often of particular importance in designing canal or tunnel linings, floor slabs, or lightly loaded structures, and in evaluating their performance. However, when using these estimates, it is recognized that uplift (expansion) parameters determined from these test methods for the purpose of estimating in-place heave of foundations and compacted soils may not be representative of many field conditions because:

5.4.1 Lateral expansion and lateral confining pressure are not simulated.

5.4.2 Rates of expansion indicated by the one-dimensional uplift tests are not always reliable indicators of field rates of heave due to fissures in the in-place soil mass and inadequate simulation of the actual availability of water to the soil in place. The actual availability of water to the in-place soil may be cyclic, intermittent, or may depend on in-place situations such as pervious soil-filled trenches and broken water and drain lines.

5.4.3 Secondary or long-term expansion may be significant for some soils and should be added to primary expansion. Secondary expansion is not determined in this procedure.

5.4.4 Chemical content of the inundating water affects volume change and expansion pressure; i.e., field water containing large concentrations of calcium ions will produce less swelling than field water containing large concentrations of sodium ions or even rainwater.

5.5 This procedure provides a measure of the uplift pressure, preconsolidation pressure, and percent expansion under a given vertical confining pressure.

6. Terminology

6.1 Definitions are in accordance with USBR 3900.

6.1.1 *Expansion.*–The increase in volume of a soil mass.

6.2 Terms not included in USBR 3900 specific to this designation are:

6.2.1 *Axial Strain.*–The ratio, expressed as a percent, of the change in length in the axial direction to the original axial length.

6.2.2 *Confined Expansion.*–Axial expansion (axial strain) at a given axial pressure following absorption of water.

6.2.3 *Uplift Pressure.*–The vertical pressure required to maintain a specimen at the initial void ratio (height) after wetting.

7. Interferences

7.1 *Friction*:

7.1.1 The specimen ring interior must be clean and smooth. The specimen ring may be made of brass or stainless steel.

7.1.2 Care must be taken when trimming an undisturbed specimen to remove any coarse sand or fine gravel protruding from the sides of the specimen and to refill the voids with fines. This prevents added friction on the sides of the specimen ring. Be sure to indicate in the report if any specimen voids were refilled.

7.1.3 Height to diameter ratio is to be between 1:2.5 and 1:3.5. If the specimen is too thick, the time to completely wet the specimen is greatly increased.

7.2 *Porous Plates*:

7.2.1 Porous plates are to be cleaned to ensure maximum waterflow to and from the specimen.

7.2.2 Porous plates are to be smooth and level on the surface of the specimen and are to fit into the specimen ring and guide ring with no more than 0.01 to 0.02 inch (0.3 to 0.5 mm) clearance. This prevents loss of the specimen around the edges of the plates.

7.2.3 When testing specimens for which pressures are likely to exceed 600 lbf/in² (4140 kPa), use sintered bronze porous plates because they are less likely to break.

7.3 *Sample Storage*:

7.3.1 Storing samples in sampling tubes is not recommended for expansive soils even though stress relief may be minimal. The influence of rust and penetration of drilling fluid or free water into the sample may adversely influence laboratory test results.

7.3.2 If tube type samples are to be stored prior to testing, they should be extruded from the sampling tubes as quickly as possible after sampling and thoroughly sealed to minimize moisture loss. The sample should be extruded from the sampling tube in the same direction as when sampled to minimize sample disturbance.

8. Apparatus

8.1 *General Apparatus*:

8.1.1 *Drying Ovens.*–An oven, thermostatically controlled, preferably of the forced-draft type and capable of maintaining a uniform temperature of 230±9 °F (110±5 °C) throughout the drying chamber. Two ovens are recommended for this procedure.

8.1.2 *Balance or Scale.*–Typical balances or scales used for this designation are:

Application	*Readable to*	*Approximate capacity*
Moisture content	0.01 g	500 g
Mass of compaction specimen	0.1 g	1000 g

8.1.3 *Dial Gauge.*–A dial gauge readable to the nearest 0.0001 inch (0.003 mm), having a minimum 1-inch (25-mm) travel.

8.1.4 *Stopwatch.*–A timing device readable to 1 second used to time test reading intervals.

8.1.5 Specimen preparation equipment as specified in USBR 5215.

8.1.6 Specimen compaction equipment as specified in USBR 5210.

8.2 *Equipment Used in This Procedure*:

8.2.1 *Load Frame.*–A device capable of applying a vertical (axial) load on the specimen to achieve a pressure of at least 200 percent of the maximum anticipated design pressure or the pressure required to maintain the specimen at its original void ratio (height). A platform scale load frame suitable for this procedure is shown on figure 3. The device incorporates a 3,000-lbm (1360-kg) capacity platform scale mounted on a stand and equipped with a screw jack attached to the underside of the frame. The jack controls a loading yoke which extends through the scale platform and over the fixed-ring consolidometer (fig. 1) which rests on the scale platform. A pressure is applied to, or released from, the soil by operating the jack and moving the loading yoke up or down. The mass required to apply the desired pressure is measured on the scale beam and is fully effective when the scale beam is balanced.

8.2.2 *Fixed-Ring Consolidometer.*–A container (figs. 1 and 4) made of brass or stainless steel, designed to hold a soil specimen during a one-dimensional uplift test. The specimen ring is securely clamped (fixed) to a baseplate.

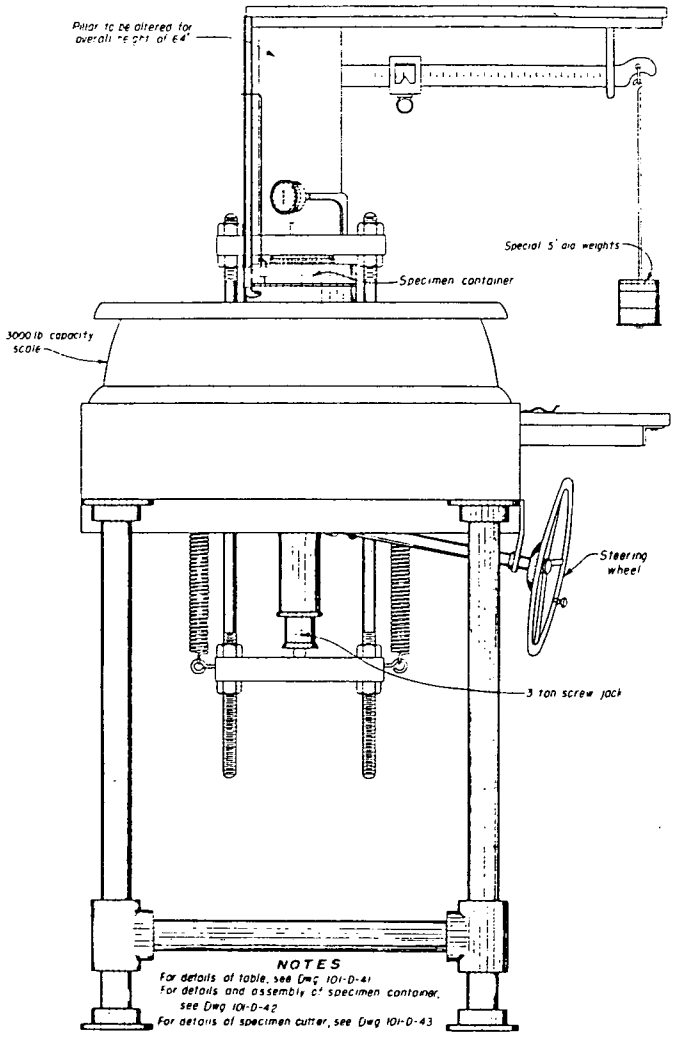

Figure 3. – Platform scale load frame with fixed-ring consolidometer in place. 101-D-40

A water collar allows wetting of the specimen through the porous plates. Change in height of the specimen is measured by means of a dial gauge attached to a dial gauge holder. A specimen ring restrains lateral expansion of the specimen, but allows unrestrained axial expansion or compression during testing. A clamping ring with a water collar holds the specimen ring in the baseplate and the water reservoir aids in wetting the specimen. A rubber gasket prevents water loss between the baseplate and clamping ring. A guide ring holds the top porous plate in place while laterally restraining the specimen, and one or more loading plates distribute the applied load evenly over the specimen.

8.2.2.1 *Specimen Ring.*–A ring made of brass or stainless steel with a highly polished inner surface. Specimen rings are to have an inside diameter of 4.25±0.001 inch and a height of 1.25±0.001 inch (108.0±0.03 and 31.8±0.03 mm). Specimen rings having an inside diameter of 2.00±0.001 inch and a height of 0.75±0.001 inch (50.8±0.03 and 19.1±0.3 mm) also may be used.

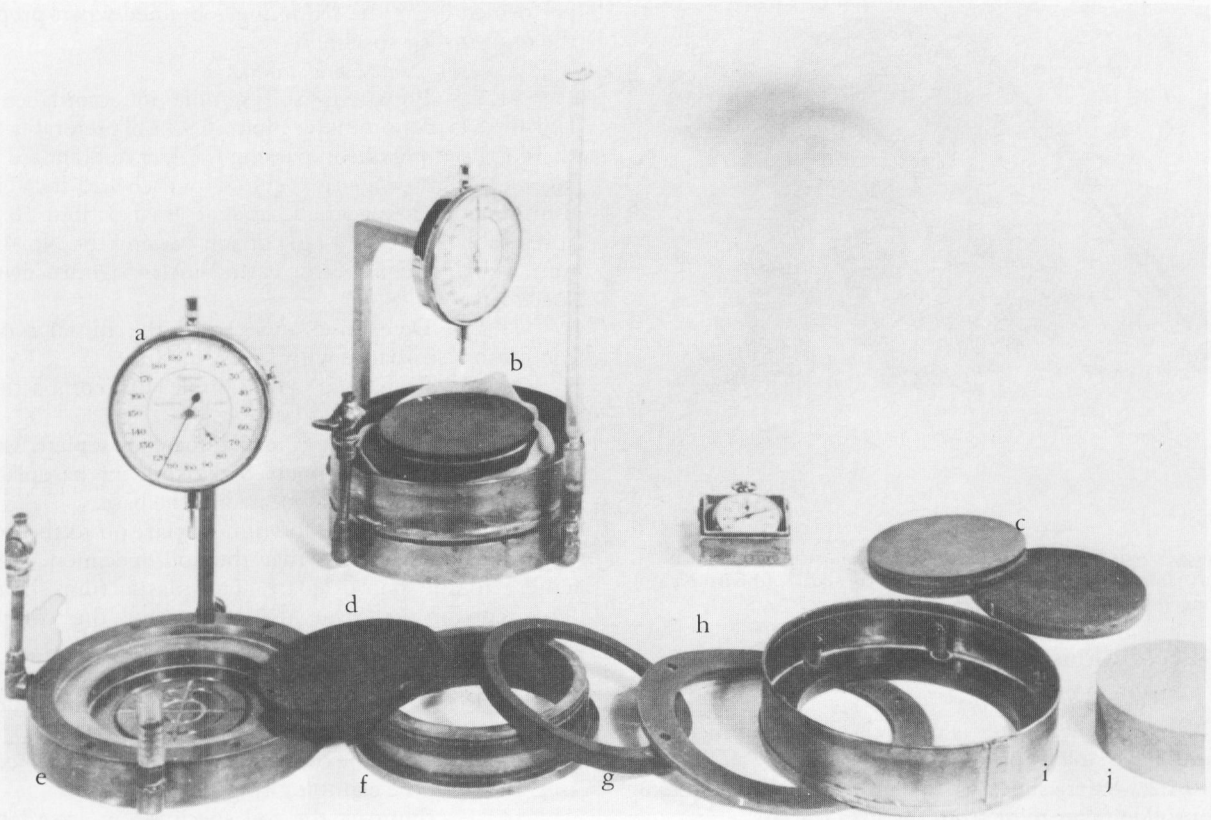

Figure 4. – Fixed-ring consolidometer. (a) dial gauge, (b) assembled consolidometer, (c) porous plates, (d) top load plate, (e) base plate, (f) specimen ring, (g) guide ring, (h) rubber gasket, (i) water collar with clamping ring, and (j) gauge block.

8.2.2.2 *Porous Plate.*–Two porous plates, made of 340-grade sintered bronze or coarse-grade silicon carbide are required. The plates are to be clean and free of cracks, chips, or other nonuniformities and are to be air dried prior to use. Porous plates are to have a diameter of 4.23±0.001 inch (107.4±0.05 mm) for a specimen ring with an inside diameter of 4.25 inches (108.0 mm). For a specimen ring with an inside diameter of 2.00 inches (50.8 mm), porous plates are to have a diameter of 1.98±0.002 inch (50.3±0.05 mm). Porous plates are to have a thickness of 0.375±0.002 inch (9.5 ±0.05 mm).

8.2.2.3 *Loading Plate.*–A loading plate made of brass or stainless steel, 0.375±0.002 inch (9.5±0.05 mm) thick and either 4.125±0.002 inch or 1.85±0.002 inch (104.8±0.05 or 47.6±0.05 mm) in diameter depending on the size specimen ring used.

8.2.3 *Gauge Blocks.*–Two gauge block reference standards are required. One block, 1.25±0.002 inch in height and 4.00±0.002 inch in diameter (31.8±0.05 and 101.6±0.05 mm); and one block, 0.75±0.002 inch in height and 1.75±0.002 inch in diameter(19.1±0.05 and 44.5±0.05 mm).

8.2.4 *Cover Plates.*–Plastic or glass plates approximately 6 inches (152 mm) square and 0.25 inch (6.4 mm) thick. These are to be marked as pairs.

8.2.5 *Specimen (4.25-in dia.) Compaction Equipment* (fig. 5):

8.2.5.1 *Compaction Collar.*–A metal collar 3.625±0.002 inch in height and having an inside diameter of 4.25±0.005 inch (92.1±0.05 and 108.0±0.13 mm) and outside diameter of 5.75±0.005 inch (146.1±0.13 mm).

8.2.5.2 *Clamping Ring.*–A brass ring 0.375±0.002 inch in height having an inside diameter of 5.01±0.002 inch (9.5±0.05 and 127.3±0.05 mm) and an outside diameter of 6.75±0.005 inch (171.3±0.05 mm).

8.2.5.3 *Tamper.*–A soil tamper having a head diameter greater than one-half the inside diameter of the compaction collar (fig. 5).

8.2.5.4 *Try Square.*–A tool capable of measuring depths and readable to 1/32 inch.

8.3 *Miscellaneous Equipment.*–Permeameter tube and holder, rubber tubing, pipettes, a water container for adding water to the specimen; plastic wrap and rubberbands may be needed for maintaining the moisture content of the specimen prior to testing; porcelain and copper drying pans for drying the specimen and trimmings after testing; squeeze bottle and soft bristle brushes for cleaning the specimen container at the end of the test.

9. Reagents and Materials

9.1 Unless in-place water is requested, tapwater that is free of acids, alkalies, or oils and is suitable for drinking should be used for wetting the soil specimen.

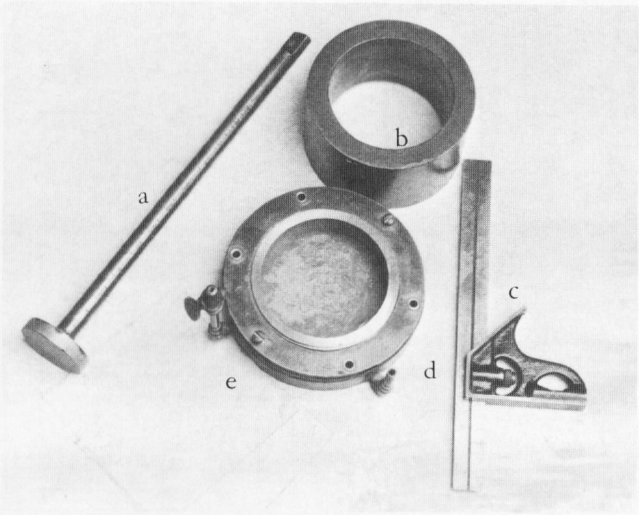

Figure 5. – 4.25-inch diameter specimen compaction equipment. (a) tamper, (b) compaction collar, (c) try square, (d) clamping ring, (e) specimen ring.

10. Precautions

10.1 *Safety Precautions*:

10.1.1 Spilled water is to be cleaned up immediately to prevent possible slipping.

10.1.2 Safety shoes are to be worn when transferring the consolidometer to or from the load frame.

10.1.3 Use asbestos gloves when removing containers from drying ovens.

10.2 *Technical Precautions*:

10.2.1 Porous plates are to be smooth ground and fine enough to minimize intrusion of soil into the plates. Cracked, chipped, or nonuniform porous plates used in testing can result in erroneous results or cause differential compression of the specimen during loading.

10.2.2 Different chemical constituents in water can have a dramatic effect on the expansive characteristics of a soil (see subpar. 5.4.4). If possible, in-place water should be used.

11. Sampling, Test Specimens, and Test Units

11.1 *Undisturbed Specimens*:

11.1.1 Prepare undisturbed specimens in accordance with USBR 5215. Specimens are to be prepared from samples which are a minimum of 1/2 inch (13 mm) larger in diameter and about 1 inch (25 mm) longer than the final desired dimensions of the specimen.

NOTE 1.–Extreme care should be used in orienting the cutting plane of the cutting bit to correspond to field conditions.

11.1.2 Determine the initial moisture content and specific gravity of the specimen from specimen trimmings in accordance with USBR 5300 and 5320. The results should be recorded on figure 6 (data sheet 1).

11.1.3 If required, determine the particle size distribution, liquid limit, plastic limit and plasticity index, and shrinkage limit in accordance with USBR 5330, 5350, 5360, and 5365, respectively. These tests should be performed using the trimmings obtained when preparing the undisturbed specimen.

11.2 *Compacted Specimens*:

11.2.1 Prepare a soil sample in accordance with USBR 5205. A minimum 2-lbm (0.9-kg) [preferably 5-lbm (2.3-kg)] sample of soil passing the U.S.A. Standard series No. 4 (4.76 mm) sieve is required for each 4.25-inch (108.0-mm) diameter specimen; and at least 1 lbm (0.5 kg) [preferably 2-lbm (0.9-kg)] of soil passing the No. 4 (4.76 mm) sieve is required for each 2-inch (51-mm) diameter specimen.

11.2.2 Determine and record the initial moisture content in accordance with USBR 5300.

11.2.3 Prepare a soil sample for compaction in accordance with USBR 5210.

11.2.4 Obtain the consolidometer baseplate used for compacting a soil specimen. Make sure the baseplate has an air dried porous plate located in the base.

11.2.5 Place a plastic film (mylar) on to the bottom porous plate to ensure that the soil specimen does not adhere to the porous plate. The plastic film should be large enough to cover the bottom of the compacted specimen.

11.2.6 Ensure that the gasket is not cracked and is flexible. Place the gasket on the baseplate and secure the clamping ring to the baseplate.

11.2.7 Place the compaction collar over the specimen ring and onto the clamping ring.

11.2.8 Compact the soil specimen in accordance to USBR 5210. Record the data in subparagraph 11.2.8.1 through 11.2.8.6 on the appropriate form in USBR 5210.

11.2.8.1 Record the specimen ring number in the space for *Mold No.*

11.2.8.2 Record the nominal height and diameter of the specimen ring.

11.2.8.3 Record the required placement dry unit weight and placement moisture content.

11.2.8.4 Compact the specimen in three lifts unless otherwise stated in the testing program.

11.2.8.5 Record the moisture content—at which the specimen was compacted—on line 24 of figure 6 (data sheet 1) as *Initial moisture content.*

11.2.8.6 After the compaction collar is removed, the specimen is trimmed level with the top of the specimen ring using a straight edge trimmer.

11.2.9 Remove the clamping ring and rubber gasket, and place a cover plate on top of the specimen.

11.2.10 Invert the consolidometer baseplate to allow removal of the specimen ring with specimen. Make sure the plastic film is removed from the bottom of the specimen. Trim the bottom of the specimen level with the bottom of the specimen ring. Place the second cover plate over the bottom of the specimen ring and specimen. Take care to minimize specimen moisture loss.

12. Calibration and Standardization

12.1 Verify that equipment is currently calibrated in accordance with the applicable calibration procedure. If the calibration is not current, perform the calibration before using the equipment for this procedure.

USBR 1000 Standards for Linear Measurement Devices
USBR 1007 Calibrating Dial Indicators
USBR 1012 Calibrating Balances or Scales
USBR 1020 Calibrating Ovens

12.2 Calibrate the specimen rings using calibration plugs. The procedure for calibration is in appendix X1.

13. Conditioning

13.1 The test specimen is to be prepared, placed, and tested as quickly as possible to minimize unrecorded moisture loss.

14. Procedure

14.1 All data are to be recorded on the "One-Dimensional Consolidation Test" forms as shown on figures 6 (data sheet 1) and 7 (data sheet 2).

14.2 Record the platform scale *Load frame No.* and *Specimen ring No.* as shown on lines 1 and 2 (fig. 6). Record the *Specimen ring height* and *diameter* to the nearest 0.01 inch as shown on lines 5 and 7 (fig. 6). Calculate and record on lines 6 and 8 (fig. 6) the nominal *specimen ring area* and *volume* to the nearest 0.01 in^2 and 0.01 in^3 respectively.

14.3 Place all parts of the unassembled consolidometer (fig. 4) except the gauge block on a platform scale load frame.

14.4 Determine the consolidometer mass and record the value on line 35 (fig. 6) as *Equipment mass* to the nearest 0.1 lbm.

14.5 Remove the unassembled consolidometer parts from the scale.

14.6 Place the appropriate size gauge block for the size specimen to be tested on the platform scale and determine and record *Gauge block* mass to the nearest 0.1 lbm as shown on line 45 (fig. 6). Record the *Gauge block No.* and the *Gauge block height* as shown on lines 3 and 4 (fig. 6).

14.7 Calculate the mass required to apply a seating load of 1-lbf/in^2 pressure on the specimen. Record to the nearest 0.1 lbm the value obtained as *Mass for seating load* as shown on line 46 (fig. 6). The seating load may be changed if required for a particular specimen.

14.8 Calculate and record to the nearest 0.1 lbm the mass required for the *Gauge block pressure seating load* as shown on line 47 (fig. 6). This is the sum of the *Equipment mass* (subpar. 14.4), the *Gauge block mass* (subpar. 14.6), and the *Mass for seating load* (subpar. 14.7).

14.9 Place the consolidometer baseplate on the platform scale.

14.10 Place a clean air-dried porous plate into the consolidometer baseplate. Position the gauge block on top of the porous plate, and place the specimen ring into the baseplate.

14.11 Ensure that the gasket is not cracked and is flexible. Place the gasket on the baseplate and secure the clamping ring with water collar to the baseplate.

14.12 Place a clean air-dried porous plate on top of the gauge block.

14.13 Place the guide ring on top of the specimen ring.

14.14 Place the loading plate on top of the porous plate and ensure that the loading plate, porous plate, and gauge block are centered in the specimen ring.

14.15 Slide and center the consolidometer under the loading yoke of the platform scale load frame as shown on figure 8. During centering of the consolidometer, lift the dial gauge spindle to avoid damage to the spindle.

14.16 Ensure that the scale beam pin is in place. Slide the scale beam mass on the scale beam (see fig. 3) to the *Gauge block pressure seating load* obtained in subparagraph 14.8.

14.17 Apply the seating load to the loading plate by turning the wheel of the platform scale loading frame clockwise until the scale beam is level. Remove the scale beam pin.

14.18 Ensure that the bottom of the loading yoke is a minimum of 0.1 inch (3 mm) above the top of the water collar of the consolidometer. If it is not, the gauge block seating load must be removed, another loading plate placed on top of the first, and subparagraphs 14.3 through 14.18 repeated until the 0.1-inch minimum clearance requirement is met. Adding another loading plate will be necessary for the smaller height specimens.

14.19 Ensure that the dial gauge spindle is centered on the loading yoke and is retracted approximately one-half its travel distance.

14.20 Read the dial gauge and record the value as *Dial reading with seating pressure on gauge block* to the nearest 0.0001 inch (0.003 mm) as shown on line 9 (fig. 6).

14.21 Insert the scale beam pin under the scale beam and release the pressure on the gauge block by turning the wheel of the platform scale loading frame counterclockwise until the loading yoke lifts off the loading plate.

14.22 Hold the dial gauge spindle and slide the consolidometer from under the loading yoke of the platform scale load frame. Release the dial gauge spindle slowly so as not to damage the gauge.

14.23 Disassemble the consolidometer. Remove the loading plate, guide ring, and upper porous plate. Remove the clamping ring with water collar, specimen ring and gauge block from the consolidometer baseplate. Leave the lower porous plate in the baseplate of the consolidometer.

14.24 Determine and record the mass of the specimen ring and a pair of cover plates to the nearest 0.1 gram. Record the value as *Mass of specimen ring + cover plates* on line 20 of figure 6 (data sheet 1).

14.25 Prepare the test specimen as described in paragraph 11, and immediately cover the top and bottom of the specimen ring with cover plates if not already done in preparing the specimen.

14.26 Determine the mass of the wet specimen, the specimen ring, and the pair of cover plates to the nearest 0.1 gram. Record the value as *Mass of specimen ring + cover plates + wet soil* on line 21 of figure 6 (data sheet 1).

14.27 Calculate and record *Mass of wet soil* on lines 22 and 36 of figure 6 (data sheet 1).

14.28 Calculate and record *Dry unit weight* of the specimen to the nearest 0.1 lbf/ft^3 on line 27 of figure 6

7-2417 (3-89) Bureau of Reclamation	ONE-DIMENSIONAL CONSOLIDATION TEST (DATA SHEET 1)	Designation USBR 5715 - 89

Project: Example	Feature: Example	
Tested By / Date	Computed By / Date	Checked By / Date
Sample No.: 1	Specimen No.: 1	

PHYSICAL PROPERTIES:

Liquid Limit: 47 %	Plasticity Index: 28 %	Shrinkage Limit: — %
Specific Gravity (Gs): 2.76	Classification Symbol: CL / CH	
Specimen Type: [X] Undisturbed [ ] Compacted	Type of Test: [ ] Consolidation [X] Uplift [ ] Expansion	

(1) Load Frame No.	10	(3) Gauge Block No.	1
(2) Specimen Ring No.	122	(4) Gauge Block Height	1.25 [X] in [ ] cm
(5) Specimen Ring Diameter			4.25 [X] in [ ] cm
(6) Specimen Ring Area = $(5)^2 \frac{\pi}{4}$			14.19 [X] in^2 [ ] cm^2
(7) Specimen Ring Height			1.25 [X] in [ ] cm
(8) Specimen Ring Volume = (6) (7)			17.74 [X] in^3 [ ] cm^3
(9) Dial Reading With Seating Pressure on Gauge Block			0.4585 [X] in [ ] cm
(10) Dial Reading With Seating Pressure on Specimen			0.4560 [X] in [ ] cm
(11) Initial Specimen Height = (4) - (9) + (10)			1.2475 [X] in [ ] cm
(12) Equivalent Height of Solids = (26) / [(6) $G_s \rho_w$] C [1/]			0.7609 [X] in [ ] cm

MOISTURE CONTENT DETERMINATION OF SPECIMEN

		INITIAL	FINAL
(13) Drying Pan Number		17	41
(14) Mass of Drying Pan	g	193.4	196.9
(15) Mass of Drying Pan + Wet Specimen	g	755.7	809.3
(16) Mass of Drying Pan + Dry Specimen	g	680.7	685.1
(17) Mass of Water (15) - (16)	g	75.0	124.2
(18) Mass of Dry Specimen = (16) - (14)	g	487.3	488.2
(19) Moisture Content = [(17) / (18)] x 100	%	15.4	25.4

INITIAL WET MASS DETERMINATION OF SPECIMEN

(20) Mass if Specimen Ring + Cover Plates	g	1323.8
(21) Mass of Specimen Ring + Cover Plate + Wet Soil	g	1886.2
(22) Mass of Wet Soil = (21) - (20)	g	562.4

DRY UNIT WEIGHT OF SPECIMEN

(23) Mass of Wet Soil = (22)	g	562.4
(24) Initial Moisture Content = (19)	%	15.4
(25) Specimen Ring Volume = (8)	[X] in^3 [ ] cm^3	17.74
(26) Mass of Dry Soil = (23) / [1 + (24) / 100]	g	487.3
(27) Dry Unit Weight = [(26) / (25)] C [2/]	[X] lbf/ft^3 [ ] kN/m^3	104.6

1/ ρ_w is the density of water at 71.5 F. For inch pound applications ρ_w = 62.29 lbm/ft^3 For SI metric applications ρ_w = $1 g/cm^3$
C is a conversion factor, for inch-pound applications C = 3.8095. For SI metric applications C = 1.000.
2/ For inch pound application, C = 3.8095 and converts g/in^3 to lbf/ft^3 assuming lbf = lbm. For SI metric application, C = 9.807 and converts g/cm^3 to kN/m^3

Figure 6. – One-dimensional consolidation test (data sheet 1) — uplift test example.

DRY MASS DETERMINATION OF WASHINGS		
(28) Drying Pan Number		9
(29) Mass of Drying Pan	g	178.1
(30) Mass of Dry Washings + Drying Pan	g	179.0
(31) Mass of Dry Washings = (30) - (29)	g	0.9
FINAL DRY MASS OF SOIL		
(32) Mass of Dry Specimen (Final) = (18)	g	488.2
(33) Mass of Dry Washings = (31)	g	0.9
(34) Final Dry Mass of Soil = (32) + (33)	g	489.1

TESTING LOADS			
(35) Equipment Mass	21.0	[X] lbm	[ ] g
(36) Mass of Wet Soil	1.2	[X] lbm	[ ] g
(37) Dry Tare = (35) + (36)	22.2	[X] lbm	[ ] g
(38) Dry Tare = (37)	22.2	[X] lbm	[ ] g
(39) Water Added	0.5	[X] lbm	[ ] g
(40) Wet Tare = (38) + (39)	22.7	[X] lbm	[ ] g
(41) Specimen Seating Load = (50)	36.4	[X] lbm	[ ] g
(42) Water Added (39)	0.5	[X] lbm	[ ] g
(43) Wet Load = (41) + (42)	36.9	[X] lbm	[ ] g

SEATING LOADS			
With Gauge Block			
(44) Equipment Mass (35)	21.0	[X] lbm	[ ] g
(45) Gauge Block Mass	5.0	[X] lbm	[ ] g
(46) Mass For Seating Load	14.2	[X] lbm	[ ] g
(47) Gauge Block Pressure Seating Load	40.2	[X] lbm	[ ] g
With Test Specimen			
(48) Dry Tare = (37)	22.2	[X] lbm	[ ] g
(49) Mass For Seating Load = (46)	14.2	[X] lbm	[ ] g
(50) Specimen Seating Load = (48) + (49)	36.4	[X] lbm	[ ] g

Remarks:

Figure 6. – One-dimensional consolidation test (data sheet 1) — uplift test example — Continued.

7-2418 (3-89) Bureau of Reclamation	ONE-DIMENSIONAL CONSOLIDATION TEST (DATA SHEET 2)	Designation USBR 5715 - 89

Tested By	Date	Computed By	Date	Checked By	Date

Sample No. 1	Specimen No. 1
Load Frame No. 10	Specimen Ring No. 122

Type of Test ☐ Consolidation ☐ Expansion ☒ Uplift

DATE	TIME sec.	DESIRED PRESSURE ☒ lbf/in² ☐ kPa	☒ MASS REQ. ☐ DEFORMATION CORRECTION ☒ lbm ☐ N	PLF GAUGE NO.	PLF GAUGE READING	DIAL/LVDT GAUGE READING 1/ ☒ in ☐ cm	HEIGHT OF SPECIMEN ☒ in ☐ cm	AXIAL STRAIN %	VOID RATIO
(1)	(2)	(3)	(4)	(5)	(6)	(7)	(8)	(9)	(10)
4/19	4	1.0	36.9			0.4560	1.2475	0.00	0.6395
	4	1.0*	36.9			0.4560	1.2475	0.00	0.6395
	4	3.5	72.4			0.4560	1.2475	0.00	0.6395
	4	8.6	144.7			0.4560	1.2475	0.00	0.6395
	4	10.0	164.6			0.4560	1.2475	0.00	0.6395
	4	10.2	167.4			0.4560	1.2475	0.00	0.6395
	4	10.4	170.3			0.4560	1.2475	0.00	0.6395
	4	10.7	174.5			0.4560	1.2475	0.00	0.6395
4/20	86,400	10.7	174.5			0.4560	1.2475	0.00	0.6395
	4	8.5	143.3			0.4564	1.2479	-0.03	0.6400
	19,800	8.5	143.3			0.4568	1.2483	-0.06	0.6406
4/21	86,400	8.5	143.3			0.4570	1.2485	-0.08	0.6408
	4	4.2	82.3			0.4600	1.2515	-0.32	0.6448
4/22	14,400	4.2	82.3			0.4620	1.2535	-0.48	0.6474
4/23	86,400	4.2	82.3			0.4627	1.2542	-0.54	0.6483
4/25	172,800	4.2	82.3			0.4633	1.2548	-0.59	0.6491
4/25	4	2.7	61.0			0.4651	1.2566	-0.73	0.6515
	10,800	2.7	61.0			0.4720	1.2635	-1.28	0.6605
4/26	86,400	2.7	61.0			0.4774	1.2689	-1.72	0.6676
4/27	172,400	2.7	61.0			0.4785	1.2700	-1.80	0.6691
4/30	519,300	2.7	61.0			0.4788	1.2703	-1.83	0.6695
5/1	4	1.0	36.9			0.4802	1.2717	-1.94	0.6713
5/1	900	1.0	36.9			0.4832	1.2747	-2.18	0.6753
5/2	86,400	1.0	36.9			0.4990	1.2905	-3.45	0.6960
5/4	345,600	1.0	36.9			0.5201	1.2936	-3.70	0.7000
5/5	432,000	1.0	36.9			0.5030	1.2945	-3.77	0.7013
5/6	518,400	1.0	36.9			0.5048	1.2963	-3.91	0.7036
5/7	604,800	1.0	36.9			0.5056	1.2971	-3.98	0.7047

* Indicates when specimen was wetted

1/ Adjusted for deformation correction

Sheet 1 of 1

Figure 7. - One-dimensional consolidation (data sheet 2) — uplift test example.

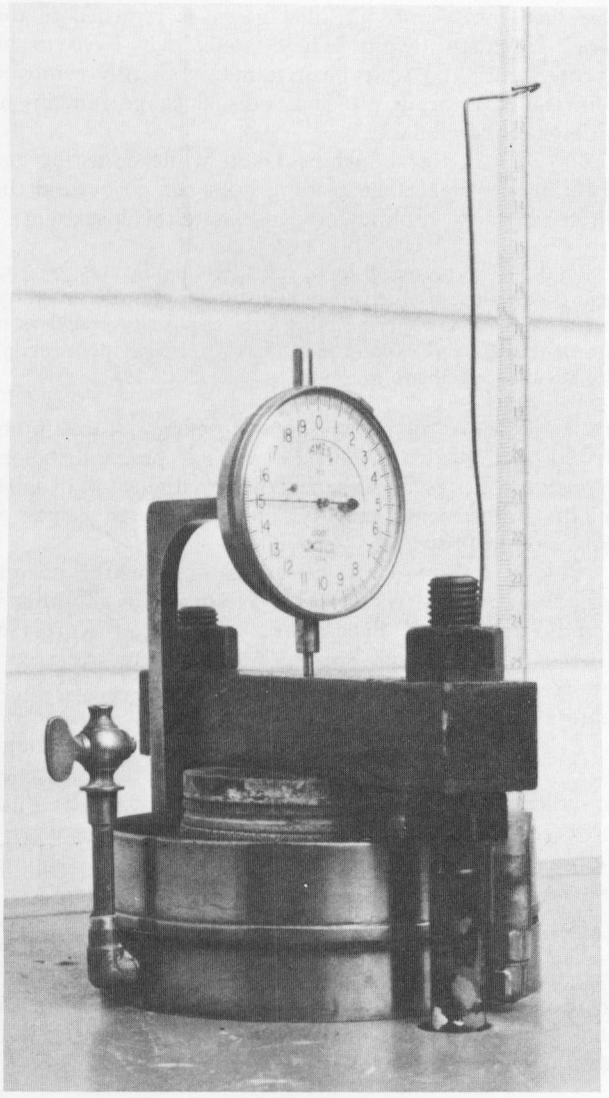

Figure 8. – Fixed-ring consolidometer with specimen placed in load frame.

(data sheet 1). The *Dry unit weight* has a tolerance of ±0.5 percent of the desired dry unit weight for compacted specimens. If the compacted specimen is not within tolerance, return to subparagraph 11.2.1 and compact another specimen.

14.29 Calculate and record to the nearest 0.1 lbm *Wet tare* (line 40), *Dry tare* (lines 37, 38, and 48), *Specimen seating load* (line 41), and *Wet load* (line 43) as shown on figure 6.

14.30 *Consolidometer Placement*:

14.30.1 Carefully slide the specimen ring containing the specimen off the bottom cover plate and onto the bottom porous plate in the baseplate of the consolidometer. Remove the top cover plate from the specimen and specimen ring.

NOTE 2.–If the specimen is loose or contains a large percentage of sand, an alternate method for placement is recommended as follows: With the cover plates securely in place, invert the specimen. Carefully remove the bottom cover plate, invert the baseplate and place over the specimen ring, carefully turn the assembly right side up. Remove the top cover plate. This technique helps to prevent possible loss of material and helps to ensure a level bottom surface.

14.30.2 Place the upper porous plate on top of the specimen.

14.30.3 Ensure that the gasket is not cracked and is flexible.

14.30.4 Place the gasket on the baseplate and secure the clamping ring with water collar to the baseplate. Ensure that the screws are tight to prevent waterflow between the baseplate and clamping ring.

14.30.5 Place the guide ring on top of the specimen ring.

14.30.6 Place a loading plate(s) (see subpar. 14.18) on top of the porous plate.

14.30.7 Lift the dial gauge spindle and slide and center the consolidometer under the loading yoke of the platform scale load frame (shown on fig. 8) and attach the permeameter tube to the baseplate of the consolidometer. Lower and center the dial gauge spindle on top of the loading yoke.

14.31 *Initial Specimen Height Determination*:

14.31.1 Ensure that the scale beam pin is in place. Move the scale beam mass on the scale beam to the *Specimen seating load* (calculated in subpar. 14.29). Record to the nearest 0.1 lbm the *Specimen seating load* in column 4, *Mass required*, on figure 7 (data sheet 2).

14.31.2 Balance the scale beam by turning the wheel of the platform scale loading frame until the scale beam is just removed from the scale beam pin. When applied and balanced, the *Specimen seating load* exerts the *Mass for seating load* on the specimen. Determine and record to the nearest 0.0001 inch (0.003 mm) the dial gauge reading as *Dial reading with seating pressure on specimen* as shown on line 10 of figure 6 (data sheet 1).

14.31.3 Record the *Date*, *Time*, and *Dial gauge reading* for the seating load in columns 1, 2, and 7 as shown on figure 7 (data sheet 2).

14.31.4 Leave the seating load on the specimen according to the testing program. Ensure that the scale beam is just removed from the lower scale beam pin by turning the wheel as necessary prior to taking a dial gauge reading. Record the date and time, and the dial gauge readings as required.

14.31.5 If a time limit is not specified, leave the seating load on the specimen overnight and record the readings on the following day.

14.31.6 Calculate and record to the nearest 0.0001 inch (0.003 mm) the *Initial specimen height* and the *Equivalent height of solids* as shown on lines 11 and 12 of figure 6 (data sheet 1).

14.31.7 Calculate and record to the nearest 0.0001 inch (0.003 mm) the *Height of specimen*, and to the nearest 0.01 percent the *Axial strain* as shown on lines 8 and 9 of figure 7 (data sheet 2) for each dial gauge reading.

14.32 *Specimen Wetting*:

14.32.1 Record in columns 3 and 4 as shown on figure 7 (data sheet 2) the *Desired pressure* to the nearest

0.1 lbf/in² and the *Mass required* to the nearest 0.1 lbm to exert that pressure at which the specimen is to be wetted. The *Desired pressure* is the same pressure as was used for the specimen seating load, if not stated otherwise in the testing program. This *Mass required* is the *Wet load* calculated in subparagraph 14.29.

14.32.2 Move the scale beam mass on the scale beam to the *Mass required* as recorded in subparagraph 14.32.1. Adjust the wheel of the platform scale load frame until the scale beam remains just removed from the lower scale beam pin.

14.32.3 Attach plastic tubing to an open drain cock (as shown on fig. 1) and lead the tubing to an overflow container.

CAUTION.–The overflow container, or any other object, should not be placed on the platform scale load frame at any time during the test.

14.32.4 Add water (see subpars. 5.4.4 and 9.1), which is at room temperature, to the permeameter tube using a pipette and bulb.

14.32.5 Allow water to flow through the bottom porous plate and out the drain cock until air bubbles no longer appear in the outflow.

14.32.6 With water in the permeameter tube—level with or slightly above the top of the drain cock—close the drain cock and remove the plastic tubing.

14.32.7 Continue to adjust the wheel of the platform scale load frame so the scale beam remains just removed from the lower scale beam pin.

14.32.8 Keep the head of water in the permeameter tube at least level with the top of the drain cock to prevent air entrapment in the consolidometer but as low as possible to prevent "piping" and uplift in low unit weight soils.

14.32.9 Continue to add water to the permeameter tube to maintain the desired head until water begins to come through the upper porous plate or until 5 minutes have elapsed.

14.32.10 Submerge the specimen by filling the water collar with tap water at room temperature to just below the rim of the water collar and ensure that it remains at that level throughout the test.

14.32.11 Ensure that the scale beam is level by turning the wheel of the platform scale load frame until the scale beam is just removed from the lower scale beam pin.

14.33 *Pressure Application to Maintain Initial Specimen Height* (uplift pressure):

14.33.1 As the dial gauge begins to move—indicating expansion of the specimen—increase the pressure on the specimen until the dial gauge indicates that the specimen is within 0.0002 inch (0.005 mm) of its initial height.

14.33.2 The pressure is increased on the specimen by steadily increasing the mass on the scale beam in response to specimen expansion. This is done with the scale beam pin in place. Slowly increase the scale beam mass and/or add weight to the scale beam hanger until the scale beam is slightly removed from the scale beam pin, and is level. Now adjust the wheel of the platform scale load frame until the dial gauge is returned to the initial specimen height. These steps may have to be repeated until the scale beam remains slightly removed from the scale beam pin and the dial gauge remains at initial specimen height.

14.33.3 Care should be taken while adjusting the wheel so the dial gauge reading does not go beyond the initial dial gauge reading and consolidate the specimen.

NOTE 3.–The permeability of the specimen dictates the time required for the specimen to react to the application of water. Specimens with low permeability may require several days to become wetted and expand. Soils having a high permeability may begin expanding in minutes.

14.33.4 Allow the specimen to expand a maximum of 0.01 inch (0.25 mm) in 24 hours if practical, before increasing the pressure to return the specimen to its original height. Adjustments may be made at lesser values of expansion to fit workday schedules.

14.33.5 Record the *Date*, the *Time* to the nearest minute, and the *Mass required* as shown in columns 1, 2, and 4 on figure 7 (data sheet 2). Calculate the pressure applied for each mass application. Calculate and record the *Height of specimen* and *Axial strain* as shown in columns 8 and 9 on figure 7 (data sheet 2).

14.33.6 Repeat subparagraphs 14.33.1 through 14.33.6 until maximum uplift pressure has been reached as indicated by no more than 0.0002 inch (0.005 mm) movement between two consecutive dial gauge readings—24 hours apart—at the same scale beam mass required to keep the specimen at its initial height.

14.34 *Specimen Expansion*:

14.34.1 Calculate and record the mass required for a pressure equal to one-fourth of the present axial pressure on the specimen. If the calculated mass is less than the *Mass required* for specimen seating load (wet tare), then use the mass required for specimen seating load.

NOTE 4.–If greater definition of the expansion characteristics of the specimen is required, smaller pressure decrements can be used.

14.34.2 Ensure that the scale beam pin is in place. Adjust the mass on the scale beam hanger and/or move the scale beam mass to the location on the scale beam corresponding to the calculated *Mass required*.

14.34.3 Turn the wheel of the consolidometer until the scale beam just lifts off the lower scale beam pin and is in the horizontal position.

14.34.4 Start the stopwatch, and record the *Date* and *Time* as shown in columns 1 and 2 on figure 7 (data sheet 2).

14.34.5 Record a *Dial gauge reading* 4 seconds after removing the scale beam pin as shown in column 7 on figure 4 (data sheet 2).

14.34.6 Whenever the scale beam rises above the horizontal, turn the wheel of the platform load frame until the scale beam is level.

14.34.7 Record a *Dial gauge reading* and the *Time* in seconds from the beginning of the load and at a minimum

of every 24 hours. Initially, readings may have to be taken every few minutes due to the rate of expansion. Be sure the scale beam is level before reading the dial gauge. Calculate and record the *Height of specimen* and *Axial strain* as shown in columns 8 and 9 on figure 7 (data sheet 2).

14.34.8 Compare the current dial gauge reading with a dial gauge reading taken 24 hours earlier at that pressure.

14.34.8.1 If the dial gauge has moved more than 0.001 inch (0.03 mm), level the scale beam and leave the specimen at the same pressure for an additional 24 hours; repeat subparagraphs 14.34.6 and 14.34.8.

14.34.8.2 If the dial gauge has moved less than 0.001 inch (0.03 mm), in 24 hours record the dial gauge reading and calculate *Height of specimen* and *Axial strain* as shown on figure 7 (data sheet 2).

14.34.9 Repeat subparagraphs 14.34.1 through 14.34.8 until the load on the specimen is approximately equivalent to the *Mass for seating load.*

14.34.10 At the end of the last load—*Mass for seating load*—stop the test.

14.35 *Specimen Removal:*

14.35.1 Insert the scale beam pin above the scale beam of the platform scale loading frame. Remove any mass from the hanger and return the scale beam mass to the zero position.

14.35.2 Drain the water from the water collar using a pipette and bulb, and remove the permeameter tube from the consolidometer baseplate.

14.35.3 Turn the wheel of the platform scale loading frame until the loading yoke lifts off of the loading plate.

14.35.4 Slide the consolidometer from beneath the loading yoke. Care should be taken with the dial gauge spindle to ensure that it is released slowly as it comes off the loading yoke.

14.35.5 Remove the screws from the consolidometer clamping ring and quickly remove, in the following order: loading plates, guide ring, clamping ring with water collar, gasket, and specimen ring with specimen and porous plates from the baseplate.

14.35.6 Remove the porous plates from the specimen and drain free water into a drying pan whose mass was previously determined and recorded on line 29 of figure 6 (data sheet 1).

14.35.7 Place the loading plate on top of the specimen and press the specimen out of the specimen ring into another drying pan whose mass was previously determined and recorded on line 14 (final) of figure 6 (data sheet 1).

14.35.8 Determine and record the *Mass of drying pan + wet specimen* to the nearest 0.1 gram as shown on line 15 of figure 6 (data sheet 1).

14.35.9 Photograph the top of the specimen (fig. 9a). Break the specimen in half and photograph the broken faces of the specimen as shown on figure 9b. Return all specimen pieces to the drying pan and determine the final moisture content of the entire specimen in accordance with USBR 5300. Record calculations on figure 6 (data sheet 1).

14.35.10 Wash any soil from the porous plates, specimen ring, guide ring, and loading plate using a squeeze bottle filled with tapwater. Save the wash water in the drying pan used in subparagraph 14.35.6.

14.35.11 If possible place the drying pan in a separate drying oven overnight. Evaporation of the large amount of free water in the washings may result in inaccurate final moistures if the washings are placed in the same

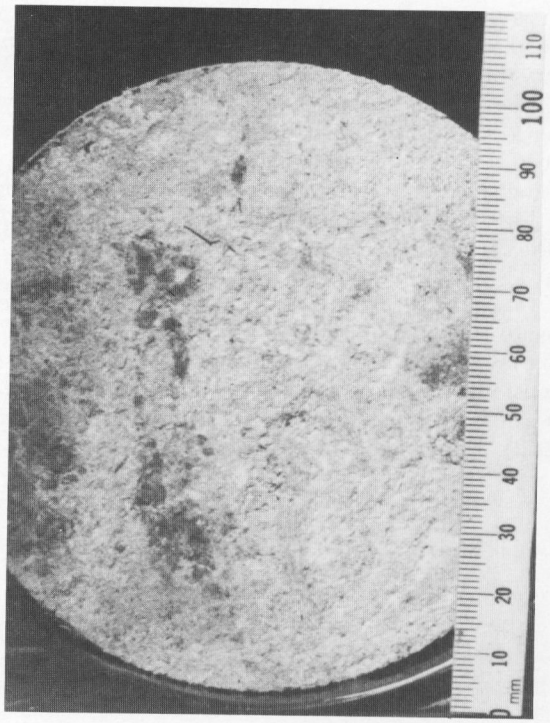

(a) Top view of test specimen.

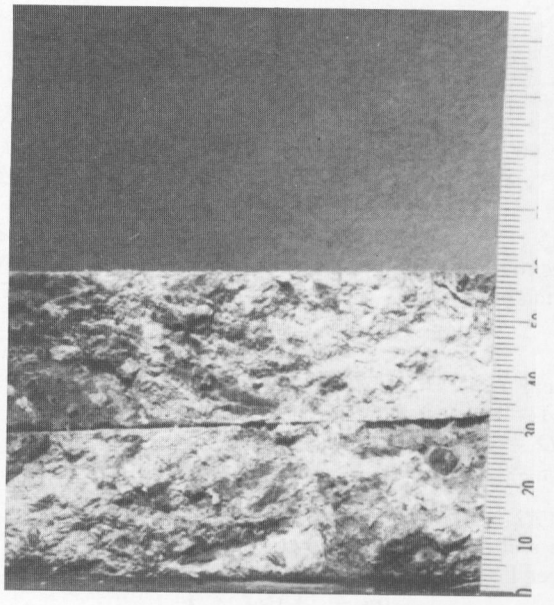

(b) Edge view of test specimen.

Figure 9. – Views of test specimen.

oven as the specimen. Determine and record on line 30 of figure 6 (data sheet 1) the *Mass of dry washings + drying pan* to the nearest 0.1 gram.

14.35.12 Scrub the porous plates in running water using a soft nylon brush. Unless the porous plates are cleaned after each test, they become clogged with soil particles and slow the flow of water to or from the specimen.

14.35.13 Determine the *Final dry mass of soil* and record the value as shown on line 34 of figure 6 (data sheet 1).

14.35.14 Prepare a plot of axial strain versus pressure as shown on figure 10.

14.35.15 Prepare a summary table of one-dimensional uplift test results as shown on figure 11. All data are from figure 6 (data sheet 1) and figure 7 (data sheet 2), or calculated in paragraph 15.

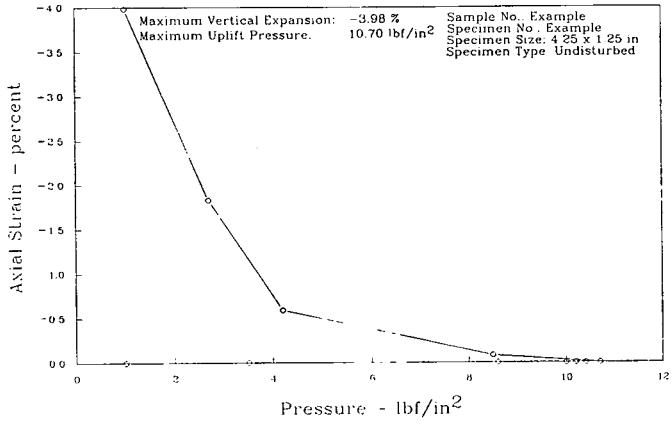

Figure 10. – Plot of test results — example.

15. Calculations

15.1 Calculate *Specimen ring area* using the nominal specimen ring diameter as shown on line 6 of figure 6 (data sheet 1).

$$A = \frac{\pi D^2}{4} \quad (1)$$

where:
A = nominal specimen ring area, in²
D = specimen ring inside diameter, in
π = 3.14

15.2 Calculate *Mass required* to exert desired load on the soil specimen as shown on line 49 of figure 6 (data sheet 1).

$$m_b = A\,P_d\,C + T \quad (2)$$

where:
m_b = mass required to exert desired load, lbm
A = nominal specimen area, in²
P_d = desired pressure, lbf/in²
T = tare mass,* lbm
C = 1 lbm/lbf

* Use the value calculated for *Dry tare* before the specimen is wetted; after wetting, use the calculated value of *Wet tare*. When calculating the mass necessary for the gauge block seating load, $T = 0$.

15.3 Calculate *Gauge block pressure seating load* as shown on line 47 of figure 6 (data sheet 1).

$$m_g = m_e + m_{gb} + m_b \quad (3)$$

where:
m_g = gauge block seating load, lbm
m_e = mass of equipment (consolidometer), lbm
m_{gb} = mass of gauge block, lbm
m_b = mass required to exert desired seating load, lbm

15.4 Calculate *Initial moisture content* as shown on line 19 of figure 6 (data sheet 1).

15.5 Calculate *Mass of wet soil* on line 36 of figure 6 (data sheet 1).

$$m_w = \frac{m_x - m_y}{453.6} \quad (4)$$

where:
m_w = mass of wet soil, lbm
m_x = mass of specimen ring, cover plates, and wet soil, g
m_y = mass of specimen ring and cover plates, g
453.6 = change gram to pound mass

15.6 Calculate *Dry tare* as shown on lines 37, 38, and 48 of figure 6 (data sheet 1).

$$T_d = m_e + m_w \quad (5)$$

where:
T_d = dry tare mass, lbm
m_e = equipment mass (consolidometer), lbm
m_w = mass of wet specimen, lbm

15.7 Calculate *Wet tare* as shown on line 40 of figure 6 (data sheet 1).

$$T_w = T_d + W_m \quad (6)$$

where:
T_w = wet tare mass, lbm
T_d = dry tare mass, lbm
W_m = mass of water added to wet the specimen (Use 0.5 lbm for 4.25-inch diameter specimen or 1.0 lbm for 2.00-inch diameter specimen.)

15.8 Calculate *Specimen seating load* as shown on lines 41 and 50 of figure 6 (data sheet 1).

$$m_s = T_d + m_b \quad (7)$$

where:
m_s = specimen seating load, lbm
T_d = dry tare mass, lbm
m_b = mass required to exert desired seating load, lbm

15.9 Calculate *Wet load* as shown on line 43 of figure 6 (data sheet 1).

$$W_L = m_s + W_m \quad (8)$$

where:
W_L = wet load, lbm
m_s = specimen seating load, lbm
W_m = mass of water added to wet the specimen, lbm

15.10 Calculate height(s) of specimen.

15.10.1 *Initial specimen height* as shown on line 11 of figure 6 (data sheet 1):

$$H_i = H_{gb} - R_{gb} + R_i \quad (9)$$

where:
H_i = initial specimen height, in
H_{gb} = height of gauge block, in
R_{gb} = dial gauge reading on the gauge block, in
R_i = initial dial gauge reading on the soil specimen, in

15.10.2 Determination of all other heights as shown in column 8 of figure 7 (data sheet 2):

$$H = H_i - R_i + R_2 \quad (10)$$

where:
H = specimen height at any reading, in
H_i = initial height of specimen, in
R_i = initial dial gauge reading on the specimen, in
R_2 = current dial gauge reading, in

15.11 Calculate *Mass of dry soil* on line 26 of figure 6 (data sheet 1).

$$m_d = \frac{m_w}{1 + w} \quad (11)$$

where:
m_d = mass of dry specimen, lbm
m_w = mass of wet specimen, lbm
w = initial moisture content, expressed as a decimal

15.12 Calculate *Equivalent height of solids* in the specimen on line 12 of figure 6 (data sheet 1).

$$H_s = C \left(\frac{m_d}{A\, G_s\, \rho_w} \right) \quad (12)$$

where:
H_s = equivalent height of solids, in
m_d = mass of dry specimen, g
A = nominal specimen area, in^2
G_s = specific gravity of soil
ρ_w = density of water = 62.29 lbm/ft^3 at 71.5 °F
C = 3.8095 changes ft^3 to in^3 and lbm to g

15.13 Calculate *Axial strain* (percent) in column 9 of figure 7 (data sheet 2).

$$\epsilon = 100 \left(1 - \frac{H}{H_i}\right) \quad (13)$$

where:
ϵ = axial strain, %
H_i = initial height of specimen, in
H = specimen height at any reading, in
100 = convert from decimal to percent

15.14 Calculate *Pressure* for a given mass in column 3 of figure 7 (data sheet 2).

$$P = C \left(\frac{m_b - T_w}{A} \right) \quad (14)$$

where:
P = pressure on specimen (desired pressure), lbf/in^2
m_b = mass on the scale beam and hanger, lbm
T_w = wet tare mass, lbm
A = nominal specimen area, in^2
C = 1 lbf/lbm (convert density to unit weight)

15.15 Calculate *Void ratio* in column 10 of figure 7 (data sheet 2).

$$e = \frac{H}{H_s} - 1 \quad (15)$$

where:
e = void ratio of specimen
H = specimen height at any reading, in
H_s = equivalent height of solids, in

15.16 Calculate *Dry unit weight* of the specimen at any reading in column 4 of figure 11.

$$\rho_d = C \left(\frac{m_d}{HA} \right) \quad (16)$$

where:
ρ_d = dry density of specimen, lbm/ft^3
m_d = mass of dry specimen, lbm
H = specimen height at any reading, in
A = nominal specimen area, in^2
C = 1,728 changes in^3 to ft^3

$$\gamma_d = \rho_d\, C^* \quad (17)$$

where:
γ_d = dry unit weight, lbf/ft^3
C^* = 1 lbf/lbm (convert density to unit weight)

16. Report

16.1 The report is to consist of completed and checked:
"One-Dimensional Consolidation Test" forms (figs. 6 and 7) data sheets 1 and 2, respectively.
Photographs of the test specimen (fig. 9).
"Axial Strain–Pressure" plot (fig. 10) with a table "Summary of One-Dimensional Consolidation Test" results (fig. 11).

16.2 All calculations are to show a checkmark and all plottings must be checked.

7-2419 (3-89) Bureau of Reclamation	SUMMARY OF ONE-DIMENSIONAL CONSOLIDATION TEST	Designation USBR 5715 - 89

Project	Example	Feature	Example
Sample No.	1	Specimen	1

Type of Test ☐ Consolidation ☐ Expansion ☒ Uplift

PRESSURE ☒ lbf/in^2 ☐ kPa	SPECIMEN HEIGHT ☒ in ☐ mm	VOID RATIO	DRY UNIT WEIGHT ☒ lbf/ft^3 ☐ kN/m^3	AXIAL STRAIN + Θ (%)
(1)	(2)	(3)	(4)	(5)
1.0	1.2475	0.6395	105.1	0.00
1.0	1.2475	0.6395	105.1	0.00
3.5	1.2475	0.6395	105.1	0.00
8.6	1.2475	0.6395	105.1	0.00
10.0	1.2475	0.6395	105.1	0.00
10.2	1.2475	0.6395	105.1	0.00
10.4	1.2475	0.6395	105.1	0.00
10.7	1.2475	0.6395	105.1	0.00
8.5	1.2485	0.6408	105.0	0.08
4.2	1.2548	0.6491	104.5	0.59
2.7	1.2703	0.6695	103.2	1.83
1.0	1.2971	0.7047	101.0	3.98

TEST SPECIMEN CONDITIONS	INITIAL	MAX. PRESSURE	FINAL
Dry Unit Weight ☒ lbf/ft^3 ☐ kN/m^3	105.1	---	101.0
Moisture Content %	15.4	---	25.4
Degree of Saturation %	66.5	---	99.1
Dry Mass ☐ lbf ☒ g	487.3	---	488.2

Maximum Vertical Expansion	3.98	%	Rebound	———	%
Pressure Required to Return to Initial Height	10.7	☒ lbf/in^2 ☐ kPa	Equivalent Height of Solids	0.7609	☒ in ☐ mm

Figure 11. – Summary of one-dimensional consolidation test — uplift test example.

APPENDIX

X1. CALIBRATING THE CONSOLIDOMETER SPECIMEN RING

X1.1 Scope

X1.1.1 This appendix outlines the procedure for calibrating the specimen rings as described in subparagraph 8.2.2.1 of this designation.

X1.2 Significance and Use

X1.2.1 Specimen rings must be calibrated to ensure accurate laboratory test results. Specimen rings not within specified tolerance can result in specimen placement unit weights that can vary by ±0.5 percent or more. This calibration procedure is to be performed upon receipt of the specimen ring and annually thereafter or if the volume of the specimen ring is questionable.

X1.3 Procedure

X1.3.1 For a 4.250-inch diameter by 1.25-inch high specimen ring, two calibration plugs are used—one 4.240±0.001-inch diameter and the other 4.260±0.001-inch diameter; each have a height of 1.25 inches. For a 2.000-inch diameter by 0.75-inch high specimen ring, two calibration plugs are used—one 1.995±0.001-inch diameter and the other 2.005±0.001-inch diameter—each have a height of 0.75 inch.

X1.3.2 Attempt to insert the minimum diameter calibration plug into the specimen ring. If the *minimum dia. calibration plug* can be inserted into the specimen ring place a checkmark in the "YES" column as shown on figure X1.1.

X1.3.3 Repeat subparagraph X1.3.2 using the maximum diameter calibration plug instead of the minimum diameter calibration plug.

X1.3.4 If there is a checkmark in the "YES" column below the *Insert minimum dia. calibration plug* and in the "NO" column below the *Insert maximum dia. calibration plug* place a checkmark in the *Accepted YES/NO* column. If this condition does not exist then place a checkmark in the *Rejected YES/YES, NO/NO* column.

X1.3.5 The specimen ring is accepted if the minimum diameter calibration plug will insert into the specimen ring but the maximum diameter calibration plug will not. If these criteria are not met the specimen ring should be discarded or remachined if appropriate.

X1.3.6 Specimen rings are to be calibrated annually and results recorded on the form "Specimen Ring Calibration" (fig. X1.1). Specimen rings also should be calibrated whenever they may have been damaged.

X1.4 Interpret Results

X1.4.1 If the specimen rings are accepted, nominal dimensions will be used for all specimen area and volume calculations. If the specimen rings are rejected, they are to be remachined if possible or discarded and replaced with acceptable specimen rings. Results recorded on the "Specimen Ring Calibration" form should be filed in the laboratory calibration book corresponding to the one-dimensional uplift test.

7-2415 (3-89) Bureau of Reclamation	SPECIMEN RING CALIBRATION					Designation USBR 5715 - 89
Calibrated by			Date			Next Calibration Date
Specimen Ring Diameter	4.25	☒ in ☐ mm	Specimen Ring Height	1.25	☒ in ☐ mm	
Minimum Calibration Plug No.	1		Minimum Calibration Plug Dia.	4.240	☒ in ☐ mm	
Maximum Calibration Plug No.	2		Maximum Calibration Plug Dia.	4.260	☒ in ☐ mm	

SPECIMEN RING NO.	INSERT MINIMUM CALIBRATION PLUG		INSERT MAXIMUM CALIBRATION PLUG		ACCEPTED	REJECTED
	YES	NO	YES	NO	YES/NO	YES/YES NO/NO
232	✓			✓	✓	
116		✓		✓		✓
114	✓			✓	✓	
108	✓			✓	✓	
122	✓			✓	✓	

Figure X1.1. – Specimen ring calibration — example.

UNITED STATES DEPARTMENT OF THE INTERIOR
BUREAU OF RECLAMATION

USBR 5720-89

PROCEDURE FOR

PERFORMING UNCONFINED COMPRESSIVE STRENGTH TESTING OF SOILS

INTRODUCTION

This procedure is under the jurisdiction of the Geotechnical Services Branch, code D-3760, Research and Laboratory Services Division, Denver Office, Denver, Colorado. The procedure is issued under the fixed designation USBR 5720. The number immediately following the designation indicates the year of acceptance or the year of last revision.

1. Scope

1.1 This designation outlines the procedure for performing unconfined compressive strength testing of soils in the undisturbed and compacted conditions.

2. Auxiliary Tests

2.1 The test specimen must be prepared in accordance with USBR 5210 or 5215 prior to performing this procedure. The moisture content and unit weight of the test specimen must be determined in accordance with USBR 5300 and 5370, respectively, as part of performing this procedure.

3. Applicable Documents

3.1 *USBR Procedures*:
USBR 1007 Calibrating Dial Indicators
USBR 1008 Calibrating Linear Variable Differential Transformers
USBR 1009 Calibrating Compaction Molds
USBR 1012 Calibrating Balances or Scales
USBR 1020 Calibrating Ovens
USBR 1045 Calibrating Force Transducers (Load Cells)
USBR 5210 Preparing Compacted Soil Specimens for Laboratory Use
USBR 5215 Preparing Soil Specimens for Laboratory Use From Undisturbed Samples
USBR 5300 Determining Moisture Content of Soil and Rock by the Oven Method
USBR 5370 Determining Unit Weight of Cylindrical Soil Specimens

3.2 *ASTM Standard*:
D 2166 Unconfined Compressive Strength of Cohesive Soil

4. Summary of Method

4.1 The test specimen is prepared in accordance with either USBR 5210 or 5215 and is loaded to failure using a compression device. Increments of stress and strain are calculated throughout the test and a curve is plotted. The moisture content and unit weight of the test specimen are determined.

5. Significance and Use

5.1 The unconfined compressive strength test is performed to obtain approximate quantitative values of the compressive strength of soils which possess sufficient cohesion to permit testing in the unconfined state.

5.2 In this designation, the unconfined compressive strength is taken as the maximum force attained per unit area or the force per unit area at 15 percent axial strain, whichever occurs first during performance of a test.

6. Terminology

6.1 Definitions are in accordance with USBR 3900. Terms of particular significance are:

6.1.1 *Strength.*–The maximum stress which a material can resist without failing for any given type of loading (International Society for Rock Mechanics definition).

6.1.2 *Compressive Strength.*–The load per unit area at which an unconfined cylindrical specimen of soil or rock will fail in a simple compression test. Commonly, the failure load is the maximum that the specimen can withstand in the test (ASTM definition).

7. Apparatus

7.1 *General Apparatus*:

7.1.1 *Balance or Scale.*–A typical balance or scale used for this designation must be readable to 0.01 g and have a capacity of about 1000 g.

7.1.2 *Drying Oven.*–An oven, thermostatically controlled, preferably of the forced-draft type, and capable of maintaining a uniform temperature of 230±9 °F (110±5 °C) throughout the drying chamber.

7.1.3 *Timer.*–A timer, generally a stopwatch, indicating the elapsed time to the nearest second, for establishing the rate of strain application.

7.1.4 *Vernier Caliper.*–A caliper, suitable for measuring the physical dimensions of the specimen to the nearest 0.01 inch (0.25 mm).

7.2 *Equipment Unique to This Procedure*:

7.2.1 Compressive strength testing apparatus consisting of the following apparatus.

7.2.1.1 *Compression Device.*–The compression device (loading frame) may be any device having sufficient capacity and control to provide the rate of loading prescribed in paragraph 12. When the compression device is set to advance at a specified rate, the actual rate should not deviate by more than ±10 percent from the required value. Vibration from the compression device should be minimal.

7.2.1.2 *Deformation Indicator.*–The deformation indicator is to be either a dial indicator or an LVDT. It should be graduated (readable) to 0.001 inch (0.025 mm) and should have a travel range of at least 20 percent of the length of the test specimen.

7.2.1.3 *Load Indicator.*–The load indicator is to be either an electronic load cell or a proving ring, and may be a part of the compression device. For soil having a compressive strength less than 15 lbf/in² (100 kPa), the load indicator should be capable of measuring the applied stress to within 0.1 lbf/in² (0.7 kPa). For soil with compressive strength of 15 lbf/in² (100 kPa) or greater, the load indicator should be capable of measuring the applied stress to the nearest 0.7 lbf/in² (5 kPa)

8. Precautions

8.1 *Safety Precautions.*–This designation may involve hazardous materials, operations, and equipment.

8.2 *Technical Precautions.*–If the test specimen is to be used for moisture determination, it should be protected to retain the moisture.

9. Sampling, Test Specimens, and Test Units

9.1 *Specimen Size*:

9.1.1 Test specimens should have a minimum diameter of 1.3 inches (33 mm). The maximum particle size recommended for various sizes of specimens follows.

Specimen diameter	*Maximum recommended ratio of specimen diameter to largest particle size*
1.3 inches (33 mm)	10
2.0 inches (51 mm)	8
2.8 inches (71 mm) or larger	6

The specimen size most commonly tested in USBR laboratories has a diameter of 2.0 inches (51 mm). If particles larger than recommended are found after completion of a test on an undisturbed specimen, indicate that information in the report of test data under *Remarks.*

9.1.2 The ratio of height to diameter of the test specimen should be between 2 and 2.5.

9.1.3 Measure the height and diameter of the specimen to the nearest 0.01 inch (0.25 mm) using a vernier caliper or other suitable device.

9.1.4 In instances where test specimens do not meet requirements of subparagraphs 9.1.1 or 9.1.2, a note indicating this information is to be included in the test data report.

9.2 *Undisturbed Specimens*:

9.2.1 Prepare undisturbed test specimens in accordance with USBR 5215.

9.2.2 Handle specimens carefully to prevent disturbance, changes in cross section, or loss of moisture.

9.2.3 Determine the moisture content of the test specimen in accordance with USBR 5300. If the entire test specimen is not used for determination of moisture content, secure a representative sample of cuttings for this purpose, and immediately place them in a covered container.

9.3 *Compacted Specimens*:

9.3.1 Prepare compacted test specimens in accordance with USBR 5210.

9.3.2 Handle specimens carefully to prevent disturbance, changes in cross section, or loss of moisture.

9.3.3 Determine the moisture content of the test specimen in accordance with USBR 5300.

9.3.4 Compacted specimens may be prepared at any predetermined moisture content and unit weight and, if required, may be saturated prior to testing. If the specimen is saturated prior to testing, it should be noted in the report of the test data.

10. Calibration and Standardization

10.1 Verify that equipment is currently calibrated in accordance with the applicable calibration procedure. If the calibration is not current, perform the calibration before using the equipment for this procedure.

USBR 1007 Calibrating Dial Indicators
USBR 1008 Calibrating Linear Variable Differential Transformers
USBR 1009 Calibrating Compaction Molds
USBR 1012 Calibrating Balances or Scales
USBR 1020 Calibrating Ovens
USBR 1045 Calibrating Force Transducers (Load Cells)

11. Conditioning

11.1 To ensure stability warm up all electronic equipment a minimum of 30 minutes prior to use.

12. Procedure

12.1 All data are to be recorded on the "Unconfined Compressive Strength Test" form as shown on figure 1.

12.2 Place the specimen in the compression device so that it is centered on the bottom platen.

12.3 Adjust the compression device carefully so that the upper platen just makes contact with the specimen.

12.4 Record the initial readings of the load indicator and deformation indicator.

12.5 Apply the load so as to produce axial strain at a rate of 1/2 to 2 percent per minute and record load, deformation, and time values at sufficient internals to define the shape of the stress–strain curve (usually 10 to 15 points are sufficient). Regulate the rate of strain so that the

approximate time to failure for unsealed specimens never exceeds 15 minutes.

NOTE 1.–Softer materials that exhibit larger deformations at failure should be tested at a higher rate of strain. Conversely, stiff or brittle materials that exhibit small deformations at failure should be tested at a lower rate of strain.

12.6 Continue loading the test specimen until several readings have been taken beyond the point where the load values decrease with increasing strain, or until 15 percent strain is reached.

12.7 Photograph—or make a sketch—the test specimen at failure showing the slope angle of the failure surface when possible.

12.8 Prepare a plot showing the relationship between compressive stress and axial strain as shown on figure 2.

13. Calculations

13.1 Calculate the strain of the test specimen.

$$\epsilon = \frac{\Delta H}{H_o} \quad (1)$$

where:

ϵ = axial strain, in/in or cm/cm
ΔH = change in height of specimen during testing, in or cm
H_o = initial height of specimen in units identical to those used with ΔH

NOTE 2.–To obtain strain in percent, multiply the value calculated in equation (1) by 100.

13.2 Calculate the average corrected cross-sectional area of the test specimen.

$$A_c = \frac{A_o}{1 - \epsilon} \quad (2)$$

where:

A_c = corrected average cross-sectional area of a specimen, in^2 or cm^2
A_o = initial cross-sectional area of a specimen in units identical to those used with A_c

13.3 Calculate the compressive stress on the test specimen using the following appropriate equation:

13.3.1 *Inch-Pound Units.*

$$\sigma = \frac{P}{A_c} \quad (3)$$

where:

σ = compressive stress on the specimen, lbf/in^2
P = axial load applied to the specimen, lbf
A_c = corrected average cross-sectional area of the specimen, in^2

13.3.2 *SI Units.*

$$\sigma = 10.000 \frac{P}{A_c} \quad (4)$$

where:

σ = compressive stress on the specimen, kPa
P = axial load applied to the specimen, N
A_c = corrected average cross-sectional area of the specimen, cm^2
10.000 = convert from N/cm^2 to kPa

14. Interpretation of Results

14.1 The maximum value of load per unit area or the load per unit area at 15 percent strain, whichever occurs first, is considered the unconfined compressive strength of the test specimen.

15. Report

15.1 The report is to consist of the following completed and checked form and plot:

"Unconfined Compressive Strength Test" form (fig. 1).

"Unconfined Compressive Strength Plot," compressive stress versus axial strain (fig. 2).

15.2 All calculations are to show a checkmark and all plotting must be checked.

7-2386 (11-86) Bureau of Reclamation	UNCONFINED COMPRESSIVE STRENGTH TEST	Designation USBR 5720-89

SAMPLE NO.	PROJECT	FEATURE
61S-464	Example	Example

SPECIMEN NO.	HOLE NO.	DEPTH
1A	DH-60	14.6-15.5 ft

TESTED BY	DATE	COMPUTED BY	DATE	CHECKED BY	DATE

SPECIMEN DIAMETER	2.00 in	INITIAL SPECIMEN HEIGHT	5.02 in
INITIAL SPECIMEN AREA	3.14 in^2	STRAIN RATE	0.03 in/min
WET UNIT WEIGHT	124.4 lbf/ft^3	DRY UNIT WEIGHT	107.9 lbf/ft^3
LOAD CELL CAPACITY	500 lbf	CALIBRATION FACTOR	50.00 lbf/v

SPECIMEN TYPE

LL=30
PI=12
SpG=2.73

COMPACTED		UNDISTURBED	
NATURAL MOISTURE	☐	NATURAL MOISTURE	☒
WETTED	☐	WETTED	☐

MOISTURE CONTENT

SPECIMEN LOCATION	ENTIRE SPECIMEN	TOP	MIDDLE	BOTTOM
CONTAINER NO.	CL-4			
MASS OF CONTAINER + WET SOIL (g)	677.0			
MASS OF CONTAINER + DRY SOIL (g)	609.7			
MASS OF CONTAINER (g)	169.7			
MASS OF WATER (g)	67.3			
MASS OF DRY SOIL (g)	440.0			
MOISTURE CONTENT %	15.3			

Figure 1. – Unconfined compressive strength test — example.

INITIAL SPECIMEN HEIGHT = H_o 5.02 in.

ELAPSED TIME ~~min~~ (sec)	DEFORMATION INDICATOR (in)	HEIGHT CHANGE ΔH (in)	AXIAL STRAIN $\Delta H/H_o \times 100$ (%)	CORRECTED AREA (in^2)	AXIAL LOAD (lbf)	COMPRESSIVE STRESS (lbf/in^2)
0	1.000	0.0	0.0	3.14	0.0	0
10	0.995	0.005	0.10	3.14	15.7	5.0
20	0.990	0.010	0.20	3.15	31.5	10.0
30	0.984	0.016	0.32	3.15	47.3	15.0
40	0.979	0.021	0.42	3.15	63.0	20.0
50	0.973	0.027	0.54	3.16	79.0	25.0
60 (1 min)	0.969	0.031	0.62	3.16	94.8	30.0
70	0.961	0.039	0.78	3.16	110.6	35.0
80	0.958	0.042	0.84	3.17	126.8	40.0
90	0.951	0.049	0.98	3.17	142.7	45.0
100	0.946	0.054	1.08	3.17	158.5	50.0
110	0.940	0.060	1.20	3.18	174.9	55.0
120(2 min)	0.935	0.065	1.30	3.18	190.8	60.0
130	0.930	0.070	1.39	3.18	206.7	65.0
140	0.925	0.075	1.49	3.19	223.3	70.0
150	0.919	0.081	1.61	3.19	239.3	75.0
160	0.914	0.086	1.71	3.19	255.2	80.0
170	0.907	0.093	1.85	3.20	272.0	85.0
180(3 min)	0.900	0.100	1.99	3.20	278.4	87.0
190	0.890	0.110	2.19	3.21	288.9	90.0
200	0.882	0.118	2.35	3.22	273.7	85.0
210	0.880	0.120	2.39	3.22	257.6	80.0
220	0.879	0.121	2.41	3.22	241.5	75.0

REMARKS Undisturbed test specimen @ natural moisture content.

GPO 852-640

Figure 1. - Unconfined compressive strength test — example — Continued.

7-2385 (11-86) Bureau of Reclamation	UNCONFINED COMPRESSIVE STRENGTH PLOT		Designation USBR 5720-89
SAMPLE NO. 61S-464	PROJECT Example	FEATURE Example	
SPECIMEN NO. 1A	HOLE NO. DH-60	DEPTH 14.6-15.5 ft	
TESTED BY DATE	COMPUTED BY DATE	CHECKED BY DATE	

SPECIMEN DIAMETER	2.00 in	INITIAL SPECIMEN HEIGHT	5.02 in
INITIAL SPECIMEN AREA	3.14 in^2	STRAIN RATE	0.03 in/min
WET UNIT WEIGHT	124.4 lbf/ft^3	DRY UNIT WEIGHT	107.9 lbf/ft^3
LOAD CELL CAPACITY	500 lbf	CALIBRATION FACTOR	50.00 lbf/v

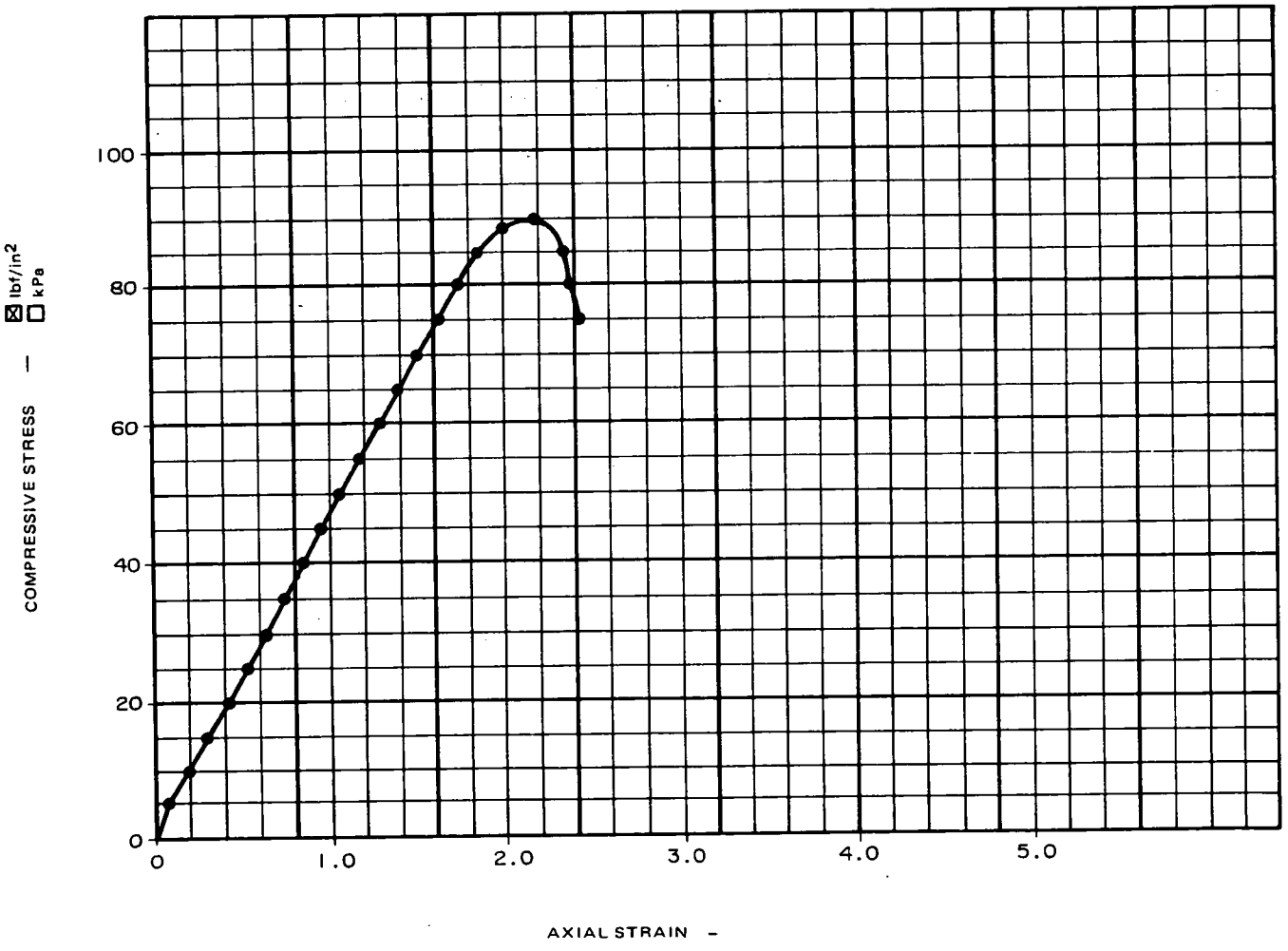

Figure 2. – Unconfined compressive strength plot — example.

UNITED STATES DEPARTMENT OF THE INTERIOR
BUREAU OF RECLAMATION

USBR 5725-89

PROCEDURE FOR

PERFORMING DIRECT SHEAR TESTING OF SOILS

INTRODUCTION

This procedure is under the jurisdiction of the Geotechnical Services Branch, code D-3760, Research and Laboratory Services Division, Denver Office, Denver, Colorado. The procedure is issued under the fixed designation 5725. The number immediately following the designation indicates the year of acceptance or the year of last revision.

1. Scope

1.1 This designation outlines the procedure for performing direct shear testing of soil. It is used primarily for determining the shear strength of soil under drained conditions. The test can be performed on undisturbed specimens at natural moisture content or on compacted specimens at specified moisture contents and unit weights.

1.2 This procedure also may be used as a general guide for determining shear strength between similar (e.g., soil on soil) or dissimilar (e.g., concrete on soil) materials.

1.3 The test is not suited for determination of exact stress–strain relationships within the test specimen because of nonuniform distribution of shearing stresses and displacements. The slow rate of displacement provides for dissipation of excess pore pressures, but it also permits plastic flow of soft, cohesive soils. Care should be taken that testing conditions simulate field conditions being investigated.

2. Auxiliary Tests

2.1 The moisture content must be determined in accordance with USBR 5300 as a part of performing this test.

3. Applicable Documents

3.1 *USBR Procedures*:
USBR 1000 Standards for Linear Measurement Devices
USBR 1007 Calibrating Dial Indicators
USBR 1008 Calibrating Linear Variable Differential Transformers
USBR 1009 Calibrating Compaction Molds
USBR 1012 Calibrating Balances or Scales
USBR 1040 Calibrating Pressure Gauges
USBR 1045 Calibrating Force Transducers (Load Cells)
USBR 3900 Standard Definitions of Terms and Symbols Relating to Soil Mechanics
USBR 5210 Preparing Compacted Soil Specimens for Laboratory Use
USBR 5215 Preparing Soil Specimens for Laboratory Use From Undisturbed Samples
USBR 5300 Determining Moisture Content of Soil and Rock by the Oven Method
USBR 5320 Determining Specific Gravity of Soils
USBR 5330 Performing Gradation Analysis of Fines and Sand Size Fraction of Soils, Including Hydrometer Analysis
USBR 5350 Determining the Liquid Limit of Soils by the One-Point Method
USBR 5360 Determining the Plastic Limit and Plasticity Index of Soils
USBR 5365 Determining Shrinkage Limit and Shrinkage Ratio of Soils
USBR 5700 Determining the One-Dimensional Consolidation Properties of Soils (Incremental Stress)

4. Summary of Method

4.1 A specimen is placed in the direct shear apparatus. A predetermined normal stress is applied and the specimen is consolidated. A lateral (shear) force is applied to the consolidated specimen to initiate a shearing failure. Three or more specimens are tested; each under a different normal stress, to determine the effect of normal stress on shear stress. The shear stress–normal stress relationship is used to determine shear strength. The range of normal stresses applied during the test series should encompass the range of normal stresses anticipated during the life of the structure so that extrapolation of shear strength to other normal stresses is not required during design.

5. Significance and Use

5.1 If the shearing stress in a soil exceeds the shear strength, failure occurs. If failure is caused by a structure load or by construction activities, buildings and equipment may be significantly damaged or persons may be injured. The direct shear test is a relatively simple method for investigating the shear strength of soils or the shear strength between dissimilar materials.

6. Terminology

6.1 Definitions are in accordance with USBR 3900. A term of particular significance is:

6.1.1 *Shear Stress.*–The stress component tangential to a given plane (ASTM definition).

6.2 Terms not included in USBR 3900 specific to this designation are:

6.2.1 *Nominal Shear Stress.*–The shear stress computed using the cross-sectional area of the shear box.

6.2.2 *Relative Lateral Displacement.*–Displacement of one-half of the shear box relative to the other half.

7. Apparatus

7.1 *General apparatus*:

7.1.1 *Balances or Scales.*–Typical balances or scales used for this designation are:

Application	*Readable to*	*Approximate capacity*
Moisture content	0.1 g	1000 g
Initial dry unit weight	1 g	4000 g

7.2 *Equipment Unique to This Procedure*:

7.2.1 *Direct Shear Apparatus.*–A device (fig. 1) to hold a specimen securely between two porous plates in such a way that torque cannot be applied to the specimen. The direct shear apparatus must provide means for applying a normal stress to two opposite faces of the specimen, for measuring change in thickness of the specimen, for permitting drainage of water through porous plates, and for submerging the specimen in water. The

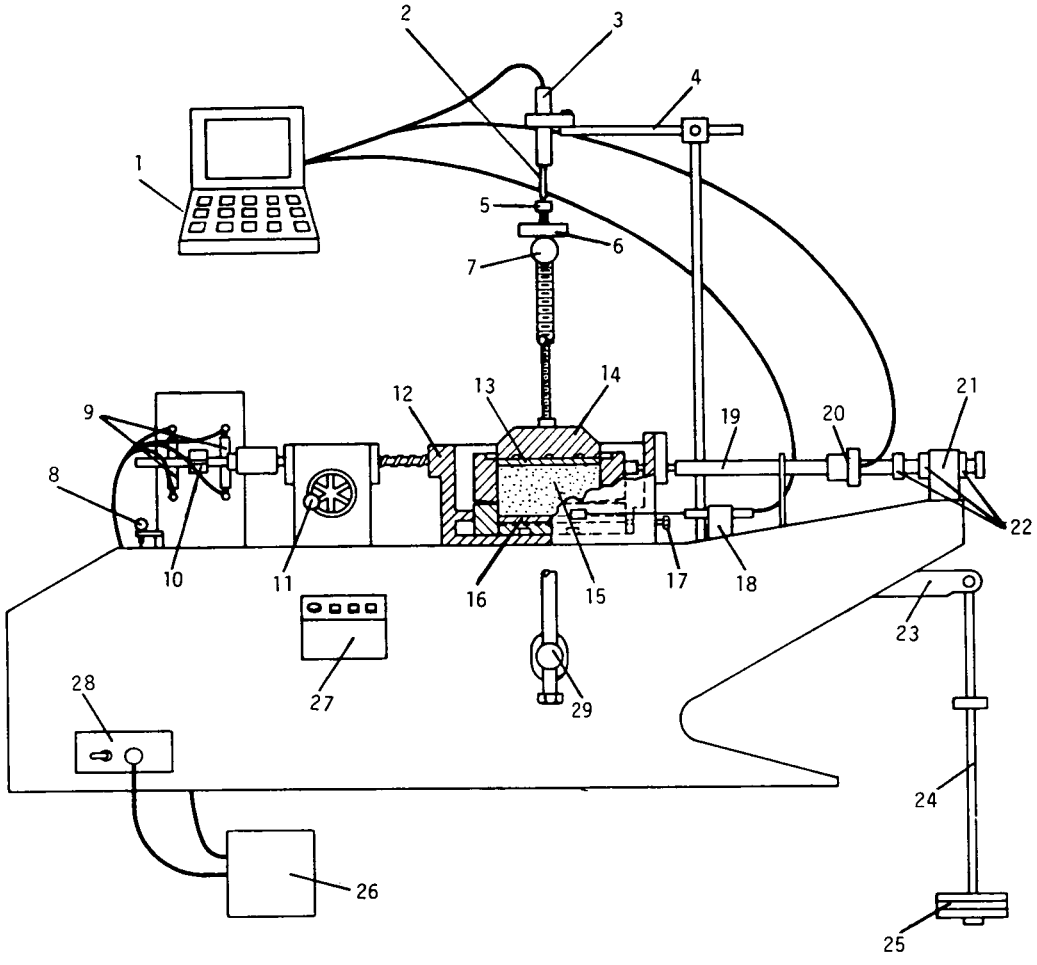

1. Data acquisition system
2. LVDT core
3. LVDT body
4. Consolidation LVDT arm
5. Yoke adjustment screw
6. Vertical yoke adjustment nut
7. Loading yoke
8. Gear change lever
9. Reversing microswitches
10. Reversing switch control bar
11. Handwheel
12. Shear box bowl
13. Top porous plate
14. Load transfer plate
15. Specimen
16. Bottom porous plate
17. Shear box lock screw
18. Horizontal strain LVDT bracket
19. Load cell coupling rod
20. Load cell retaining bolts
21. Tailstock
22. Adjusting nuts
23. Lever loading arm
24. Load hanger
25. Masses
26. Automatic reversing switch relays
27. Control panel
28. Selector switch — manual/automatic
29. Loading yoke pivot

Figure 1. – Schematic of direct shear apparatus.

apparatus must be capable of applying a shear force to the specimen along a predetermined plane parallel to the faces of the specimen that are subjected to normal stress. The frames that hold the specimen must be sufficiently rigid so they do not distort during shearing. The various parts of the direct shear apparatus that come into contact with the specimen must be made of material—e.g., bronze, stainless steel, etc.—not susceptible to corrosion by moisture or substances within the soil.

7.2.2 *Shear Box.*–A shear box (fig. 2), usually made of stainless steel, bronze, or aluminum, provides for specimen drainage from top and bottom. The box is divided horizontally into halves of equal thickness which are fitted together with alignment screws. The shear box is fitted with gap screws that are used to adjust the space (gap) between the top and bottom halves of the shear box. Specimen size may vary, but a 2 or 3 inch (50 or 75 mm) square specimen is usually used.

7.2.3 *Normal Loading Device.*–Normal stress is applied by a lever loading arm and yoke or a pneumatic loading device capable of maintaining normal stress within ±1 percent of the specified normal stress throughout the test.

7.2.4 *Controlled Displacement Equipment.*–Displacement equipment must be capable of applying a wide range of horizontal displacement rates from approximately 0.0001 to 0.1 in/min (0.0025 to 2.5 mm/min) and must shear the specimen at a uniform rate of displacement not to exceed ±10 percent of the specified displacement rate.

7.2.5 *Shear Force Measurement.*–Shear force is measured by a load cell or proving ring. The accuracy of the load cell must be ±0.25 percent or less of full scale.

7.2.6 *Displacement Measurement Device.*–Horizontal and vertical displacements are measured using LVDTs (linear variable differential transformers) or other displacement-measuring devices (dial gauges). The devices are to be readable to 0.001 inch (0.025 mm).

7.2.7 *Shear Box Bowl.*–Different kinds of shear box bowls are used (fig. 2a or 2d). One type simply holds the shear box in place (fig. 2a) and the shear box contains the porous plates for specimen drainage (fig. 2b). The other type (fig. 2d) holds the shear box in place and has a porous plate embedded in the bottom to allow drainage from the soil specimen.

7.2.8 *Specimen Trimmer.*–A trimmer used to cut oversize specimens to shear box dimensions (fig. 3).

7.2.9 *Porous Plates.*–Porous plates (two required) made of silicon carbide, aluminum oxide, or other materials not susceptible to corrosion from soil substances or moisture. Some porous plates are coarser on one side than on the other. The coarser side is to be placed against the soil specimen. The plates should be coarse enough to develop adequate interlock with the specimen but fine enough to prevent intrusion of soil into the pores. Exact criteria have not been established for this; however, permeability of the plate should be greater than the permeability of the soil.

7.2.10 *Spacer Plate.*–Spacer plates (two required), 2- by 2- by 0.375-inch (50- by 50- by 9.5 mm) thick, not susceptible to corrosion from soil substances or moisture.

7.2.11 *Try square.*–A tool with a linear scale readable to 1/32 inch.

7.2.12 *Cover Plates.*–Plastic or glass plates either 2.25 or 4.25 inches (57 or 108 mm) square and 0.25-inch (6-mm) thick. They are to be marked as pairs.

7.2.13 *Time Device.*–Timing devices readable to ±1 second are to be used to record elapsed time.

7.2.14 *Humidity Room.*–A controlled humidity room should be used for storing samples as well as for preparing specimens so that moisture loss during preparation is minimized.

7.2.15 *Automatic Data Acquisition and Reduction System.*–Any automatic data acquisition and/or reduction (computer) must be accomplished using a system capable of maintaining the accuracy of the individual measuring instruments.

7.3 *Miscellaneous Equipment.*–Trimming equipment (USBR 5215), compaction equipment (USBR 5210), level,

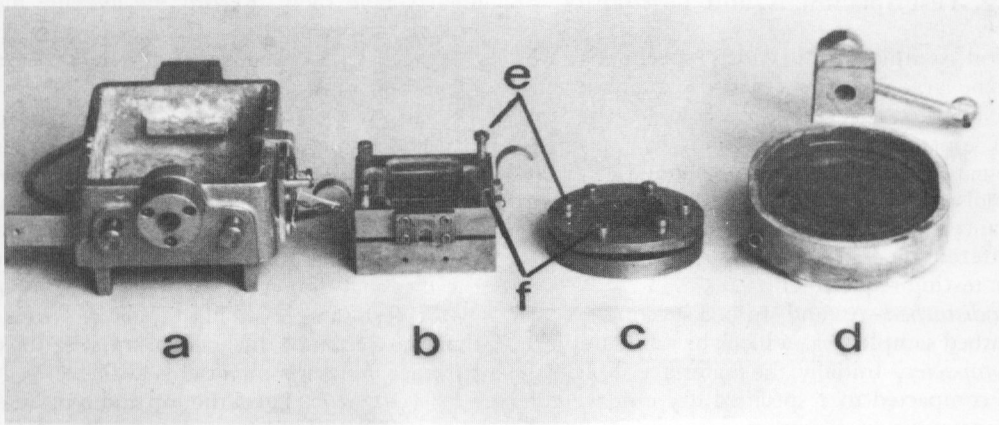

Note: Gap screws have screw driver heads, alignment screws have Allen heads, as shown.

Figure 2.–Shear box bowls with associated shear boxes with gap and alignment screws installed. (a) shear box bowl, (b) shear box with removable bottom porous plate, (c) shear box, (d) shear box with bottom porous plate attached, (e) gap screws, and (f) alignment screws.

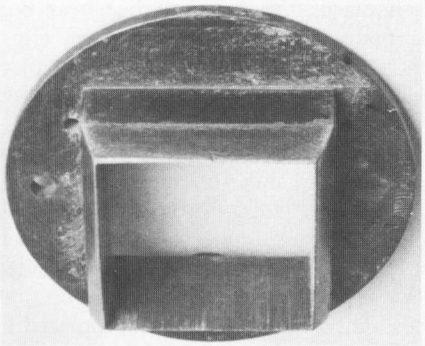

Figure 3. – Specimen trimmer bit.

ruler, screwdriver, Allen wrench, moisture-proof specimen containers for trimmings, distilled water, U.S.A. Standard series No. 4 (4.75 mm) sieve, and modeling clay.

8. Reagents and Materials

8.1 Distilled water is to be used whenever water is required.

9. Precautions

9.1 *Technical Precautions*:

9.1.1 Clean the porous plates after each test to remove soil particles or any other impurities that might impede water flow into or out of the specimen.

9.1.2 Ensure that the gap between the top and bottom halves of the shear box is 0.025 inch (0.64 mm). A larger gap may cause excessive extrusion of material as the test progresses. A smaller gap may result in the top and bottom halves coming into contact with each other.

9.1.3 A test specimen of largest practical area obtainable from the soil sample should be used to perform the test.

10. Sampling, Test Specimens, and Test Units

10.1 The soil sample from which specimens are prepared should be large enough so that similar specimens may be obtained if further testing is required. Prepare specimens in a controlled humidity room to minimize excess moisture gain or loss. Extreme care should be taken in preparing undisturbed specimens of sensitive soils to prevent disturbance of their natural structure.

10.2 The different types of specimens that may be used, depending upon testing requirements are:

10.2.1 *Undisturbed.*–An undisturbed specimen is cut from an undisturbed sample (e.g., a block or tube sample).

10.2.2 *Compacted.*–Initially, the material is disaggregated and then compacted to a specified dry unit weight at a predetermined moisture content.

10.2.3 *Dissimilar Materials.*–This type of specimen allows determination of shear strength along a surface between two different materials, e.g., soil and concrete, soil and geotextile, soil and rock, etc.

10.3 *Specimen Preparation*:

10.3.1 *Undisturbed Soil Specimens.*–There are several ways to prepare specimens for this procedure. The method described is recommended because it causes least disturbance to a specimen.

NOTE 1.–See USBR 5215 for more detailed information on preparing undisturbed soil specimens.

10.3.1.1 Record all required specimen information on the "Direct Shear Testing — Data Sheet 1, Specimen Information" form as shown on figure 4, including the location of the specimen in the original sample. Under *Remarks*, record a physical description of the soil; include such features as silt varves, fractures, slickensides, etc. Note any difficulties encountered while trimming the specimen.

10.3.1.2 Assemble the shear box (see note 2).

NOTE 2.–Before assembling the shear box, inspect the alignment screws, gap screws, and the hole for each screw for soil or other contaminants. If necessary, clean the threads with a tap or die to ensure that the two halves of the shear box fit flush with each other. Additionally, ensure that the insides of both halves of the shear box are clean and free of any obstructions (such as pins which may be present to hold removable porous plates in place) and that the gap screw holes are in proper alignment.

10.3.1.3 Determine the dimensions of the specimen. If the specimen will completely fill the shear box, measure and record the inside dimensions of the shear box to the nearest 0.1 inch. If a circular specimen is to be tested, measure the diameter of the specimen at several locations with calipers. Record the average measurement as *Specimen dimensions.*

10.3.1.4 Measure and record the height of the inside of the assembled shear box. If a shear box with a removable bottom porous plate is used, ensure that the measurement is taken from the top of the porous plate which is placed into the shear box. Take two measurements and average them. Record the average measurement as *Height of specimen.*

10.3.1.5 Determine the mass of the assembled shear box plus cover plates to the nearest 0.1 gram. If a shear box with a removable bottom porous plate is used, also determine the mass of the porous plate. Record the mass on data sheet 1 as *Mass of shear box + cover plates.*

10.3.1.6 If the specimen to be trimmed is cut from a parent sample, the width or diameter of the test sample should be about 1 to 2 inches (25 to 50 mm) greater than the diagonal dimension of the shear box and the height of the test sample should be about 1 to 2 inches longer than the combined thickness of the shear box and specimen trimmer if enough material is available.

10.3.1.7 Level the top and bottom of the sample.

10.3.1.8 Place the sample on a clean sturdy platform.

10.3.1.9 Wax the bottom of the sample to the platform to ensure that it will not move excessively during trimming.

7-2356 (8-86)
Bureau of Reclamation

DIRECT SHEAR TESTING - DATA SHEET 1
SPECIMEN INFORMATION

Designation USBR 5725 - 89

SAMPLE NO. Example PROJECT Example FEATURE Example

DRILL HOLE DH-8 LOCATION Area B DEPTH 10.0-20.0 [X] ft [ ] m

TEST TYPE: [X] DIRECT SHEAR [ ] REPEATED DIRECT SHEAR [ ] ROTATIONAL SHEAR

TESTED BY _____ DATE _____ COMPUTED BY _____ DATE _____ CHECKED BY _____ DATE _____

SPECIMEN DATA

SPECIMEN NO. 51 SPECIMEN DIMENSIONS 2.0 X 2.0 X 1.0 [X] in [ ] mm

SPECIMEN TYPE: [X] COMPACTED [ ] UNDISTURBED [ ] SLURRIED

SLIDING SURFACE: [X] INTACT [ ] PRECUT [ ] OTHER _____

SOIL CLASSIFICATION SYMBOL CH
PERCENT GRAVEL 0
PERCENT SAND 4
PERCENT FINES 96

LIQUID LIMIT 55 (%)
PLASTICITY INDEX 31 (%)
SPECIFIC GRAVITY 2.69
SOIL CONSISTENCY (NO. OF BLOWS) —

MOISTURE CONTENT DETERMINATION

	INITIAL (TRIMMINGS)		FINAL (SPEC.)	
CONTAINER NO.	CL-223		CL-115	
MASS OF CONTAINER AND WET SPECIMEN	568.1	g	349.5	g
MASS OF CONTAINER AND DRY SPECIMEN	506.6	g	322.6	g
MASS OF CONTAINER	276.1	g	245.4	g
MASS OF WATER	61.5	g	26.9	g
MASS OF DRY SPECIMEN	230.5	g	77.2	g
MOISTURE CONTENT	26.7	%	34.8	%

INITIAL DRY UNIT WEIGHT DETERMINATION

MASS OF SHEAR BOX + COVER PLATES	1914.8	g	
MASS OF SHEAR BOX + COVER PLATES + WET SOIL	2071.3	g	
MASS OF WET SOIL	156.5	g	
MASS OF DRY SOIL = (MASS OF WET SOIL)/(1 + INITIAL MOISTURE CONTENT/100)	123.5	g	
INSIDE AREA OF SHEAR BOX	4.00	[ ] mm^2	[X] in^2
HEIGHT OF SPECIMEN	1.32	[ ] mm	[X] in
VOLUME = (AREA x HEIGHT OF SPECIMEN)	5.28	[ ] mm^3	[X] in^3
INITIAL DRY UNIT WEIGHT = (C* x MASS OF DRY SOIL/VOLUME)	89.1	[ ] kN/m^3	[X] lbf/ft^3

*For SI metric application, C=.009807, which converts g/mm^3 to kN/m^3
For inch-pound application, C=3.810, which converts g/in^3 to lbf/ft^3.

REMARKS: Fat clay, gray-brown, iron staining on surfaces, minor amounts of fine sand, dry, no reaction with HCL.

Figure 4. – Direct shear testing — data sheet 1, specimen information — example.

10.3.1.10 Center and level the trimmer bit on top of the sample. Place the cutting spacer adapter on top of the trimmer bit. Insert the cutting rod into the cutting spacer adapter. The complete cutting assembly with soil sample is shown on figure 5.

10.3.1.11 Using the cutting lever, push the trimmer bit vertically into the sample no more than 1/4 inch (6 mm).

10.3.1.12 While maintaining a slight downward pressure with the cutting lever, trim the soil as close to the trimmer bit as possible without cutting through the vertical projection of the cutting edge of the trimmer bit to the platform. Trim the soil at least 1 inch (25 mm) below the bit and maintain a slight outward slope to avoid undercutting the specimen. Push the trimmer down into the sample about 1/4 inch.

10.3.1.13 Repeat subparagraph 10.3.1.12 until the specimen protrudes about 1/4 inch above the top of the trimmer bit.

10.3.1.14 With a knife, wire saw, or other appropriate tool, carefully separate the specimen—now contained within the trimmer bit—from the sample. If the trimmer bit has been pushed entirely through the sample to the platform, carefully separate the specimen from the platform.

10.3.1.15 Remove the cutting rod and spacer adapter.

10.3.1.16 With a knife, wire saw, or other appropriate tool, screed off any portion of the specimen which protrudes from the top of the trimmer bit.

10.3.1.17 Place a 1/4 inch thick spacer plate on top of the specimen.

10.3.1.18 Invert the trimmer bit with spacer plate and specimen and place on the platform.

10.3.1.19 Push down on the trimmer bit until the spacer plate is flush with the top of the trimmer.

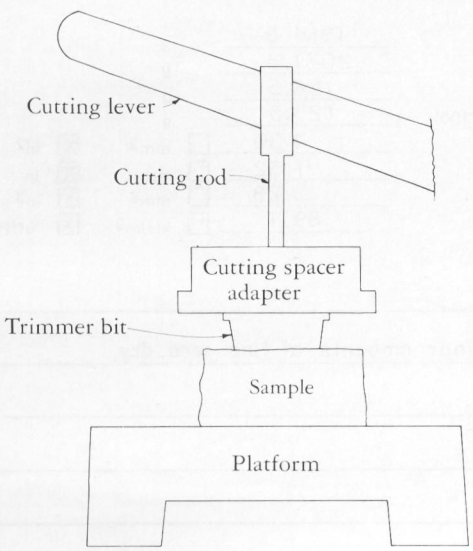

Figure 5. – Cutting assembly with soil sample.

10.3.1.20 With a knife, wire saw, or other appropriate tool, screed off any portion of the specimen which protrudes from the bottom of the trimmer bit.

10.3.1.21 The specimen is now ready to be inserted into the shear box. If the shear box has a removable bottom porous plate, place as described in paragraph 10.3.1.22. If the shear box does not have a removable bottom porous plate, place as described in paragraph 10.3.1.23.

10.3.1.22 Shear box with removable bottom porous plate:

10.3.1.22.1 Place a moist porous plate on the bottom of the specimen.

10.3.1.22.2 Invert the trimmer bit with porous plate, specimen, and spacer plate and push down on the trimmer bit until the porous plate is flush with the bottom of the trimmer bit.

10.3.1.22.3 Carefully remove the spacer plate from the top of the specimen.

13.3.1.22.4 Carefully align and attach the bottom of the shear box to the top of the trimmer bit using two screws.

10.3.1.22.5 With the shear box lower plate on the platform, align the shear box and trimmer bit with specimen and porous plate over the lower plate and push down until the lower plate is flush with the bottom of the trimmer bit.

10.3.1.22.6 Align this assembly over a 1.25-inch (32-mm) thick spacer and push down until the bottom of trimmer bit is flush with the platform.

10.3.1.22.7 Push in the retaining pins (see fig. 6) to lock the lower plate and porous plate in place.

10.3.1.22.8 Remove the shear box from the trimmer bit, cover the top and bottom of the shear box with cover plates, and proceed to subparagraph 10.3.1.24.

10.3.1.23 Shear box without removable bottom porous plate:

10.3.1.23.1 Invert the trimmer bit with specimen and spacer plate and carefully align and attach the

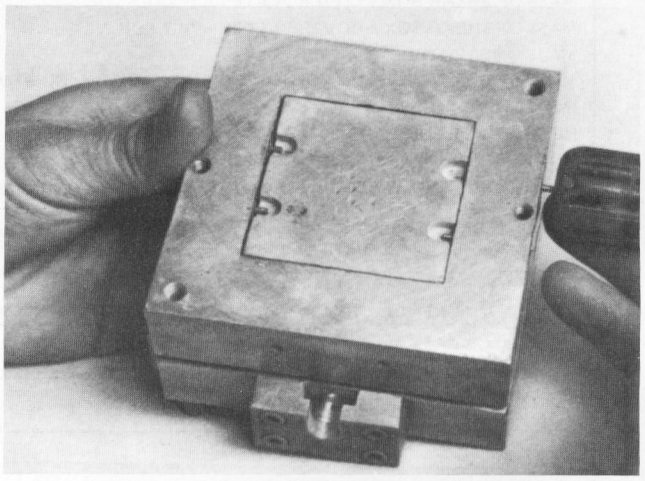

Figure 6. – Pushing in retaining pins over a correctly positioned lower plate.

bottom of the shear box to the trimmer bit using two screws.

10.3.1.23.2 Align this assembly over a 1.25-inch thick spacer and push down until the bottom of the trimmer bit is flush with the platform.

10.3.1.23.3 Carefully remove the 1/4-inch (6-mm) spacer plate from the top of the specimen in the shear box.

10.3.1.23.4 Carefully remove the trimmer bit with 1.25-inch spacer from shear box.

10.3.1.23.5 Immediately cover the top and bottom of the shear box with cover plates.

10.3.1.24 Retain trimmings in labeled, airtight containers for other laboratory tests as required.

10.3.1.25 Determine the initial moisture content and specific gravity of the specimen from specimen trimmings in accordance with USBR 5300 and 5320, respectively. Results of the initial moisture content determination should be noted on data sheet 1 (fig. 4).

10.3.1.26 If required, determine and record on data sheet 1 (fig. 4) soil classification; percentages of gravel, sand, and fines; liquid limit; plasticity index; and specific gravity.

10.3.1.27 Determine and record the initial dry unit weight of the specimen in the shear box.

10.3.1.27.1 Determine and record to the nearest 0.1 gram on data sheet 1 (fig. 4) the *Mass of shear box + cover plates + wet soil.*

10.3.1.27.2 Calculate and record *Mass of wet soil.*

10.3.1.27.3 Calculate and record *Mass of dry soil* by dividing the mass of wet soil by [1 + (initial moisture content in percent / 100)].

10.3.1.27.4 Calculate the density by dividing mass of dry soil by volume and then multiplying by the appropriate constant to convert to dry unit weight in either kN/m^3 or lbf/ft^3. Record the *Initial dry unit weight* of the specimen to the nearest 0.1 lbf/ft^3 or kN/m^3.

10.3.2 *Compacted Specimen*:

NOTE 3.–See USBR 5210 for more detailed information on preparing compacted soil specimens.

NOTE 4.–If required, soil may be compacted as outlined in USBR 5210, extruded from the mold, and a test specimen prepared as outlined in subparagraph 10.3.1.

10.3.2.1 Assemble the shear box (see note 2).

10.3.2.2 Attach compaction top to shear box.

10.3.2.3 Attach shear box to compaction base.

10.3.2.4 Pass the sample through a No. 4 (4.75 mm) sieve. Retain the minus No. 4 material in a labeled, airtight container. Unless otherwise instructed, only minus No. 4 material should be used for the compacted specimen. Determine the moisture content of the minus No. 4 material in accordance with USBR 5300. Check the measured moisture content against the moisture content specified for the compacted specimen. If the difference is greater than ±0.5 percentage point, correct the moisture content. This may be done by adding water to the sample if it is too dry or air drying the sample if it too moist. The amount of water to add to the sample to achieve the correct moisture content can be determined as shown on figure 7.

10.3.2.5 If the calculated mass of water to be added is positive, add the indicated amount. If the calculated mass of water to be added is negative, dry the sample until the necessary mass loss has been achieved. If water was added to the sample, place it in a labeled, airtight container for at least 16 hours before compacting it.

10.3.2.6 Again determine the moisture content in accordance with USBR 5300. Check the moisture content against the moisture content specified. If the difference is greater than ±0.5 percentage point, correct the moisture content until it is within the acceptable range.

10.3.2.7 Thoroughly mix the soil sample.

10.3.2.8 Determine the mass of moist soil required to obtain the specified dry unit weight.

10.3.2.8.1 To determine the total amount of soil required, and the amount of soil per layer, the following steps may be used in the inch-pound system of units:

10.3.2.8.2 Wet unit weight = (dry unit weight) × [(1 + moisture content / 100)].

10.3.2.8.3 Convert wet unit weight to wet density by changing lbf/ft^3 to lbm/ft^3 and record the nearest 0.1 lbm/ft^3 (assume 1 lbf = 1 lbm).

10.3.2.8.4 Mass of soil required equals wet density times volume of specimen (volume inside shear box).

10.3.2.8.5 Mass of soil per layer equals the mass of soil divided by the number of layers. (Typically, three layers are used when compacting a direct shear specimen.)

10.3.2.9 Obtain the required amount of soil as calculated in subparagraph 10.3.2.8.5 and place it into the shear box.

10.3.2.10 Spread the soil to a uniform depth and level the surface by pressing down lightly with a wood plunger or other suitable tamper.

10.3.2.11 Compact each soil layer using an appropriate size tamper and mallet; i.e., for a 2- by 2-inch (50- by 50-mm) shear box, use a tamper that is slightly undersize.

10.3.2.12 Place the tamper on top of the soil, and using the mallet, compact the soil to the required height.

NOTE 5.–It is recommended that the tamper used be scribed to indicate the appropriate height for each layer compacted. This helps to ensure a more uniform placement unit weight of the test specimen.

10.3.2.13 Repeat subparagraphs 10.3.2.9 through 10.3.2.12 until all the soil calculated in subparagraph 10.3.2.8.4 has been compacted into the shear box.

10.3.2.14 Remove the compaction top from the shear box and trim any portion of the specimen that protrudes above the shear box with a straightedge to ensure planeness. Save the trimmings and store them in an airtight container.

10.3.2.15 Remove the shear box from the compaction base and trim any portion of the specimen which protrudes below the shear box with a straightedge to ensure

7-2327 (10-85) Bureau of Reclamation

ADDED WATER DETERMINATION

Designation USBR - 5725 - 8 9

SAMPLE NO.	PROJECT	FEATURE
Example	Example	Example

COMPUTED BY	DATE	CHECKED BY	DATE

Specimen No.	Moisture Content %			Mass g				
	Initial	Desired	Difference	Specimen and Container	Container	Specimen	Dry Mass of Specimen	Water to Add
	(1)	(2)	(3)	(4)	(5)	(6)	(7)	(8)
51	16.3	26.5	10.2	893.7	172.1	721.6	620.5	63.3
			(2) – (1)			(4) – (5)	$100\left[\frac{(6)}{100+(1)}\right]$	(7) $\left[\frac{(3)}{100}\right]$

Remarks: Specimen used for direct shear testing.

Auxiliary Tests:

USBR 5300 - 8 9

GPO 848-762

Figure 7. – Added water determination — example.

planeness. Immediately cover the top and bottom of the shear box with cover plates.

10.3.2.16 Determine and record the physical properties, initial moisture content, and initial dry unit weight of the specimen by repeating subparagraphs 10.3.1.25 through 10.3.1.27.4.

10.3.3 *Specimens Having Dissimilar Materials*:

10.3.3.1 Because of the variation of materials and the possible different methods of placement of those materials; i.e., concrete cast against in-place soil, soil compacted against precast concrete, etc., the method of specimen preparation must be specified by the responsible engineer.

11. Calibration and Standardization

11.1 Verify that equipment is currently calibrated in accordance with the applicable calibration procedure. If the calibration is not current, perform the calibration before using the equipment for this procedure.

USBR 1007 Calibrating Dial Indicators
USBR 1008 Calibrating Linear Variable Differential Transformers
USBR 1040 Calibrating Pressure Gauges
USBR 1045 Calibrating Force Transducers (Load Cells)

11.2 Calibrate the normal loading device annually by loading a calibrated load cell placed in the shear box.

11.2.1 If a lever loading arm and yoke is used, then the vertical force recorded by the load cell is:

$$W = C_n\, m \qquad (1)$$

where:

W = vertical (normal) force acting on the specimen, lbf (assume 1 lbm = 1 lbf)
C_n = lever loading arm constant for the pneumatic loading device (2.5 for most machines)
m = hanger mass, lbf (assume 1 lbm = 1 lbf)

11.2.1.1 If C_n is not equal to 2.5, calculate a new constant by the relation $C_n = W/m$, after ensuring that the load cell is properly calibrated.

11.2.2 If a pneumatic loading device is used, W is the vertical force which corresponds to the pressure reading on a calibrated pressure gauge.

11.2.2.1 If the force recorded by the load cell does not equal the force determined by the pressure guage (i.e., $C_n = 1.0$) then either the load cell or the pressure gauge, or both, may need recalibration.

12. Preparation of Apparatus

12.1 Center the shear box bowl (fig. 1, part 12) using the handwheel (part 11) on the direct shear apparatus.

12.2 Place the shear box with specimen into the shear box bowl. Ensure it is properly seated and oriented. Make sure the porous plates (parts 13 and 16) are moist.

12.2.1 For some types of apparatus, the top half of the shear box is held in place by a notched rod connected to a load cell, which fits into a receptacle in the top half of the shear box. The bottom half of the shear box is held in place by a lock screw (part 17). When a shear load is applied to the specimen, the bottom half of the shear box is moved and the top half is held stationary.

12.2.2 For some types of apparatus, the top half is held in place by a top anchoring plate. Adjust the anchoring plate so that it is tight against the 0.08-inch (2-mm) thick spacer between the plate and frame by tightening the anchoring plate retaining bolts.

12.3 Adjust the load-cell coupling rod (part 19) by turning the adjusting nuts (part 22) so the shear box bowl is held rigid, but load is not imposed on the load cell.

12.4 Properly position and adjust the horizontal displacement measurement device, such as a dial gauge or LVDT, held by part 18. The LVDT is adjusted until a zero reading is obtained.

NOTE 6.–If a computer is used to read LVDT values, execute the necessary keystrokes to display the LVDT values and position the LVDT back and forth until the reading is zero.

12.5 Place a moist porous plate on top of the specimen (see subpar. 7.2.9).

12.6 Place the load transfer plate (part 14) in place over the top porous plate (part 13).

12.7 Put the loading yoke (part 7) in position and adjust it so the top bar is level as shown on figure 8.

12.8 For dead-load lever arm loading systems, turn the yoke adjustment screw (part 5) against the recess in the load transfer plate (part 14) so the lever loading arm (part 23) is level. For pneumatic loading systems, turn the yoke adjustment screw until it is snug against the recess in the load transfer plate. If there is no yoke adjustment screw then place a ball bearing of appropriate size in the recess

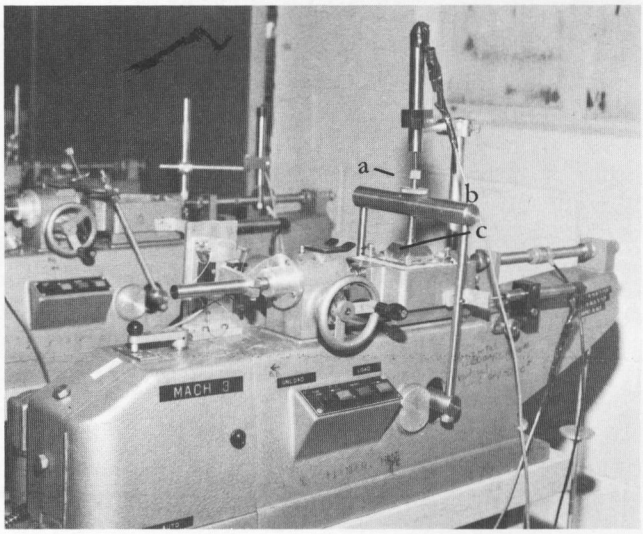

Figure 8. – Loading yoke in position for testing. (a) yoke adjustment screw, (b) loading yoke, and (c) load transfer plate.

in the load transfer plate and adjust the yoke so it is snug against the ball bearing.

12.9 Apply a 1/2 to 2 lbf/in^2 (3.5 to 14 kPa) pressure (seating pressure) on the specimen and make certain that all components of the loading system are properly seated and aligned. Ensure the top porous plate and load transfer plate are aligned so their movement into the shear box will not be inhibited.

12.10 Put a vertical displacement measurement device—such as a dial gauge or LVDT—in place. Position it so it bears on top of the yoke adjustment screw as shown on figure 9.

12.11 Adjust the vertical displacement measurement device until an initial zero reading is obtained (see note 6).

12.12 Check the entire apparatus to ensure that the equipment is aligned, seated, zeroed, etc.

NOTE 7.–If a computer is used, initialize it. This entails ensuring that the storage registers are empty. If they are not, old data should be purged. However, make sure a permanent copy of the old data is available before purging.

12.13 If required, fill the shear box bowl with distilled water and keep it full for the duration of the test.

NOTE 8.–If a computer is used, execute the necessary keystrokes to enter specimen physical properties and other specimen data as required.

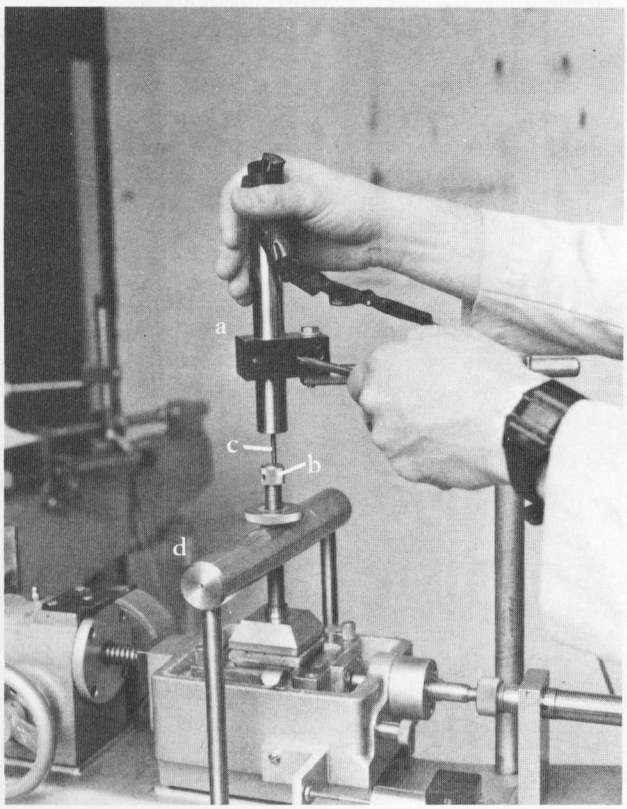

Figure 9. – Vertical displacement measurement device placement. (a) LVDT body, (b) yoke adjustment screw, (c) LVDT core and (d) loading yoke.

13. Conditioning

13.1 Specimens should be prepared in a controlled humidity room to minimize excessive moisture gain or loss.

13.2 Prior to testing, the sample should be stored in such a manner to prevent: (a) contamination with other material, (b) loss of soil, (c) loss of moisture, or (d) loss of identification.

13.3 If water is added to the soil sample to bring it to a specified moisture content, the wetted soil should be placed in an airtight container for approximately 16 hours prior to compacting a test specimen.

14. Procedure

14.1 All data are to be recorded on the "Direct Shear Testing" form as shown on figure 10 (data sheet 2a).

14.2 *Consolidation*:

14.2.1 Calculate and record the normal load required to achieve the required normal stress. Apply the required normal stress, or increment thereof, by adding the necessary masses to the hanger or by adjusting the pneumatic pressure regulator so the necessary normal stress is achieved (see subpar. 15.1.3). Always begin with the lowest normal stress and proceed to the highest.

NOTE 9.–The normal stress applied to the specimen depends upon the information required. Application of the normal stress in one increment may be appropriate for relatively firm soils. For relatively soft soils, however, several increments may be necessary to prevent damage to the specimen. The initial increment depends upon the strength and sensitivity of the soil. The normal stress should not be so large as to squeeze the soil out of the gap between the shear box halves.

14.2.2 Allow the specimen to drain and consolidate under the desired normal stress, or increment thereof, until the specimen is in a well-defined state of secondary consolidation. A computer can be used to automatically record time and vertical displacement readings; otherwise, manually record these readings (fig. 10).

14.2.2.1 Refer to USBR 5700 for guidelines on determining stages of primary consolidation and secondary consolidation.

14.2.2.2 Plot vertical displacement versus square root of time to confirm that primary consolidation has occurred (fig. 11).

14.2.3 After the specimen has consolidated, turn the gap screws clockwise until they contact the bottom half of the shear box. Remove the alignment screws (if water starts to drain out, plug the holes with Plasticene or clay), and turn the gap screws one-half turn (for screws with 20 threads/inch) clockwise, which lifts the top half of the shear box 0.025 inch (0.64 mm).

14.2.4 Turn the gap screws counterclockwise (outward) four full turns.

14.3 *Shearing Procedure*:

14.3.1 If a computer was used to obtain and record consolidation readings, reinitialize it (see note 7).

7-2357 (8-89)
Bureau of Reclamation

DIRECT SHEAR TESTING - DATA SHEET 2a
DIRECT SHEAR AND REPEATED DIRECT SHEAR

Designation USBR 5725-89

SAMPLE NO. Example SPECIMEN NO. Example TEST TYPE: [X] DIRECT [ ] REPEATED [ ] SLIDING FRICTION MACHINE NO. 5

SPECIMEN DIMENSION 2X2X1 [X] in [ ] cm SPECIMEN AREA 4.0 [X] in^2 [ ] cm^2 NOMINAL NORMAL STRESS 25.0 [X] lbf/in^2 [ ] kPa

DISPLACEMENT RATE 0.0005 [X] in/min [ ] cm/min LOAD CELL FACTOR 1.0 [X] lbf/V [ ] N/V LVDT FACTOR 1.0 [X] in/V [ ] mm/V

TESTED BY _____ DATE _____ COMPUTED BY _____ DATE _____ CHECKED BY _____ DATE _____

READING NO.	DATE	TIME			ELAPSED TIME	VERTICAL DISPLACEMENT		NORMAL FORCE		HORIZONTAL DISPLACEMENT		DISPLACEMENT CHANGE	CUMULATIVE HORIZONTAL DISPLACEMENT	RELATIVE LATERAL DISPLACEMENT	SHEAR FORCE		NOMINAL SHEAR STRESS
						READING	DISPLACEMENT	READING	FORCE	READING	DISPLACEMENT				READING	FORCE	
		hr	min	s	min	V	[X] in [ ] mm	V	[X] lbf [ ] N	V	[ ] in [ ] mm	[X] in [ ] mm	[X] in [ ] mm	%	V	[X] lbf [ ] N	[X] lbf/in^2 [ ] kPa
1	8/2	13	01	55	0.0	0.000	0.000	100.0	100.0	—	—	—	—	—	—	—	—
2	8/2	13	02	11	0.3	0.035	0.035	100.0	100.0	—	—	—	—	—	—	—	—
3	8/2	13	03	12	1.3	0.039	0.039	100.0	100.0	—	—	—	—	—	—	—	—
4	8/2	13	08	46	6.9	0.041	0.041	100.0	100.0	—	—	—	—	—	—	—	—
5	8/2	13	38	46	36.9	0.045	0.045	100.0	100.0	—	—	—	—	—	—	—	—
6	8/2	14	08	46	66.9	0.045	0.045	100.0	100.0	—	—	—	—	—	—	—	—
7	8/2	14	16	10	74.3	0.045	0.045	100.0	100.0	—	—	—	—	—	—	—	—
TOUCH																	
8	8/2	14	22	07	0.0	0.045	0.045	100.0	100.0	0.000	0.000	0.000	0.000	0.00	0.0	0.0	0.0
9	8/2	14	53	36	31.5	0.051	0.051	100.0	100.0	0.011	0.011	0.011	0.011	0.55	22.5	22.5	5.6
10	8/2	15	15	06	53.0	0.054	0.054	100.0	100.0	0.021	0.021	0.010	0.021	1.05	30.7	30.7	7.7
11	8/2	15	36	32	74.4	0.056	0.056	100.0	100.0	0.031	0.031	0.010	0.031	1.55	36.0	36.0	9.0
12	8/2	15	57	32	95.4	0.058	0.058	100.0	100.0	0.041	0.041	0.010	0.041	2.05	39.7	39.7	9.9
13	8/2	16	18	32	116.4	0.061	0.061	100.0	100.0	0.052	0.052	0.011	0.052	2.60	42.8	42.8	10.7
14	8/2	16	39	32	137.4	0.063	0.063	100.0	100.0	0.062	0.062	0.010	0.062	3.10	45.4	45.4	11.4
15	8/2	17	01	32	159.4	0.065	0.065	100.0	100.0	0.072	0.072	0.010	0.072	3.60	47.3	47.3	11.8
16	8/2	17	23	32	181.4	0.066	0.066	100.0	100.0	0.082	0.082	0.010	0.082	4.10	49.0	49.0	12.3
17	8/2	17	45	33	203.4	0.068	0.068	100.0	100.0	0.093	0.093	0.011	0.093	4.65	50.4	50.4	12.6
18	8/2	18	07	32	225.4	0.070	0.070	100.0	100.0	0.103	0.103	0.010	0.103	5.15	51.3	51.3	12.8
19	8/2	18	52	32	270.4	0.073	0.073	100.0	100.0	0.123	0.123	0.020	0.123	6.15	53.2	53.2	13.3

REMARKS: _____

GPO 830 415

Figure 10. - Direct shear testing — data sheet 2a — example.

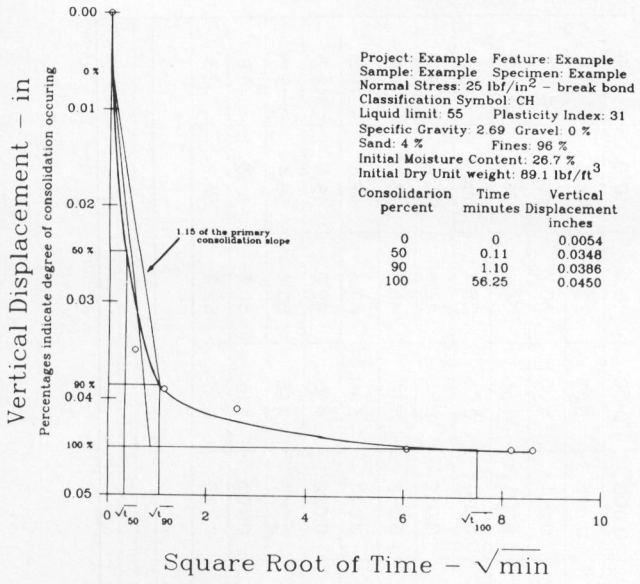

Figure 11. – Vertical displacement versus square root of time plot — example.

14.3.2 Set the desired horizontal displacement rate.

14.3.2.1 Shear the specimen at a relatively slow rate so no excess pore pressures exist at failure. The following equation is used as a guide to determine the estimated minimum time required from the start of the test to failure.

$$t_f = 50\ t_{50} \qquad (2)$$

where:

t_f = total estimated elapsed time to failure, min
t_{50} = time required for the specimen to achieve 50% consolidation under the specified normal stress, or increment thereof (fig. 11), min

NOTE 10.–If the material exhibits a tendency to swell, the soil must be inundated with water and permitted to achieve equilibrium under an increment of normal stress before the minimum time to failure can be determined. The time-consolidation curve for subsequent normal stress increments is then valid for use in determining t_f.

14.3.2.2 Estimated displacement rate can be determined from the following equation.

$$\text{Estimated displacement rate} = \frac{d_f}{t_f} \qquad (3)$$

where:

d_f = estimated horizontal displacement at failure,* in
t_f = total estimated elapsed time to failure, min

* If the material is plastic, use $d_f = 0.4$ inch otherwise use $d_f = 0.2$ inch. However, actual displacement rate is subject to approval by the responsible engineer.

14.3.2.3 For some types of apparatus, the displacement rate is achieved using combinations of gear wheels and gear lever positions as shown on figure 12a. For other types, the displacement rate is achieved by turning a control knob on an electronic control box to the desired position as shown on figure 12b.

14.3.2.4 Using the adjustments available for the type of apparatus used, set the actual displacement rate as close as possible to the estimated displacement rate. In no case should the estimated displacement rate be exceeded in normal testing.

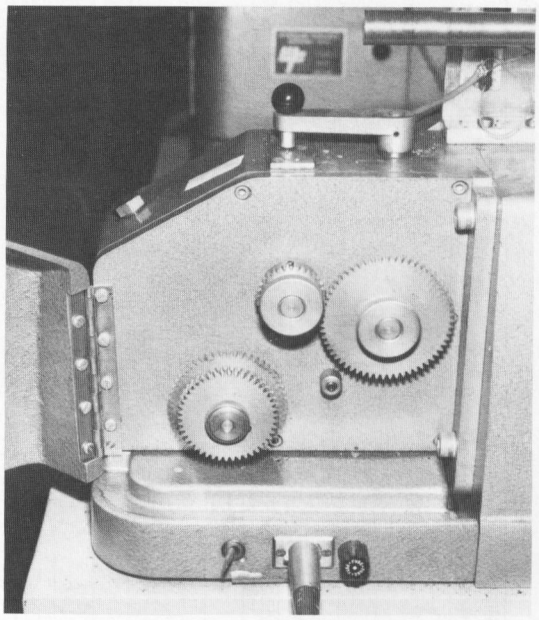

(a) Gear wheel combination for controlling the displacement rate.

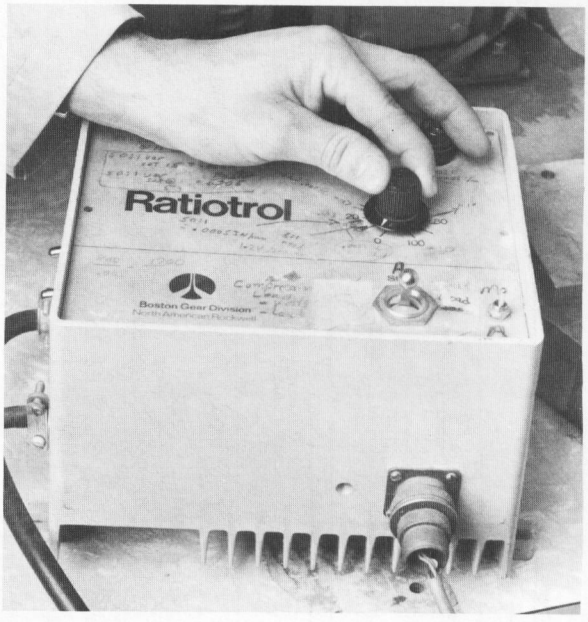

(b) Electronic control box for controlling the displacement rate.

Figure 12. – Displacement rate control.

14.3.3 Set the reading interval on the computer or other recording device as specified in the testing program.

NOTE 11.–The interval at which data readings are taken is usually dependent on displacement rate and specimen size. Normally, data readings are taken at time intervals that will yield readings at displacements of approximately 1 percent of the original specimen dimensions.

14.3.4 Execute the necessary keystrokes on the computer terminal so the computer starts recording the required readings. Make sure an initial reading is taken for use as an initial value. If a computer is not available, manually record prescribed readings (fig. 10).

14.3.5 Start the apparatus to begin shearing.

14.3.6 After reaching the required displacement, stop the apparatus and the recording device. Ensure that a permanent copy of the data is created.

14.3.7 Remove the normal stress by removing mass from the hanger or by reducing the air pressure with the pressure regulator. Manually return the shear box halves to their original position so the shear box halves are vertically aligned.

14.3.8 At this point, two options are available (1) obtain and place a new specimen for the next higher normal stress, which is usually the case, or (2) proceed with the specified loading sequence on the same specimen.

14.3.9 If a new specimen is required, remove the existing specimen (see subpar. 14.4), trim or compact a new one (see par. 10), and repeat paragraphs 11 through 14 until the number of specimens requested has been tested under the specified normal stresses.

14.3.10 If the same specimen is to be used for the next higher normal stress, replace the alignment screws and tighten them until the shear box halves are pulled together. Apply the next higher normal stress and follow the consolidation and shearing procedures outlined in subparagraphs 14.2 and 14.3, respectively.

14.4 *Concluding the Test Program*:

14.4.1 After the specimen has been tested under the specified normal stress or stresses and all data have been recorded, turn off the motor.

14.4.2 Remove the normal stress from the specimen.

14.4.3 Align the shear box halves.

14.4.4 Remove the shear box from the shear box bowl.

14.4.5 Separate the shear box halves with a sliding motion parallel to the failure plane. Do not pull the shear box halves apart perpendicular to the failure surface.

14.4.6 Photograph the failure surface.

14.4.7 Remove the specimen from the shear box and determine the moisture content of the entire specimen in accordance with USBR 5300. Record on data sheet 1 (fig. 4) as *Moisture content, final (spec.)*.

14.4.8 Thoroughly clean all apparatus surfaces that came in contact with the test specimen.

14.4.9 Calculate the relative lateral displacement and nominal shear stress. Prepare plots of (1) nominal shear stress versus normal stress with the corresponding angle of internal friction and cohesion (see par. 15), (2) nominal shear stress versus relative lateral displacement for each specimen (fig. 13), and (3) vertical displacement versus square root of time for each specimen (fig. 11).

15. Calculations

15.1 Equations for required calculations follow. They can be incorporated either into a computer program for automated analysis or can be applied manually.

15.1.1 Relative lateral displacment of the test specimen is:

$$\lambda_r = \frac{\lambda_c}{L} \times 100 \qquad (4)$$

where:

λ_r = relative lateral displacement, %
λ_c = cumulative horizontal displacement, in
L = length of specimen, in (or diameter if round specimens are used)
100 = convert decimal to percent

15.1.2 Nominal shear stress, τ, acting on the specimen is:

$$\tau = \frac{F}{A} \qquad (5)$$

where:

τ = nominal shear stress, lbf/in²
F = measured shear force, lbf
A = nominal area of the failure surface calculated from original specimen dimensions, in² (For example, 4 in² for 2- by 2-in specimens).

15.1.3 Normal stress, σ_n, acting on the specimen is:

$$\sigma_n = \frac{W}{A} \qquad (6)$$

where:

σ_n = normal stress, lbf/in²
W = vertical (normal) force acting on the specimen, lbf; equal to $C_n m$ (assume 1 lbm = 1 lbf)
A = nominal area of the faiure surface calculated from original specimen dimensions, in² (For example, 4 in² by 2- by 2-in specimens.)
C_n = lever loading arm constant, or for the pneumatic loading device, $C_n = 1.0$
m = hanger mass, lbm

15.1.4 The angle of internal friction is determined from the slope of the best-fit line relating the nominal shear stress to normal stress.

15.1.5 The cohesion, c, is the y intercept at zero normal stress of the line relating nominal shear stress to normal stress.

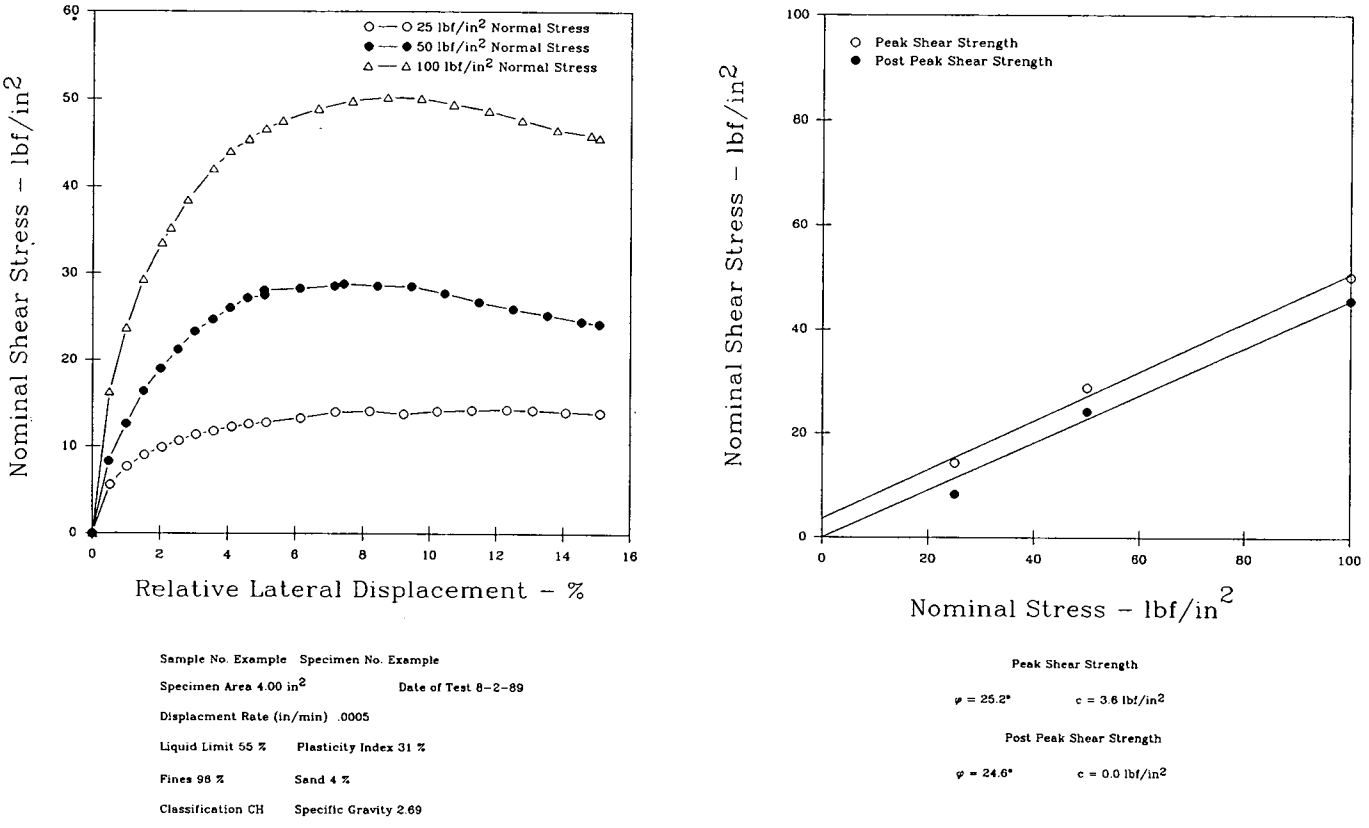

Figure 13. – Direct shear test plots — example.

16. Report

16.1 The report is to consist of the completed and checked "Direct Shear Testing" data sheets (figs. 4 and 10) with data plots as shown on figures 11 and 13.

16.2 All calculations are to show a checkmark and all plotting must be checked.

17. Background Reference

Annual Book of ASTM Standards, Part 19 — Natural Building Stones; Soil and Rock, American Society for Testing and Materials, Philadelphia, Pennsylvania, 1982.

UNITED STATES DEPARTMENT OF THE INTERIOR
BUREAU OF RECLAMATION

USBR 5726-89

PROCEDURE FOR

PERFORMING REPEATED DIRECT SHEAR TESTING OF SOILS

INTRODUCTION

This procedure is under the jurisdiction of the Geotechnical Services Branch, code D-3760, Research and Laboratory Services Division, Denver Office, Denver, Colorado. The procedure is issued under the fixed designation USBR 5726. The number immediately following the designation indicates the year of acceptance or the year of last revision.

1. Scope

1.1 This designation outlines the procedure for performing repeated direct shear testing of soil. It is used for determining residual shear strength of clay and clay shale under drained conditions. The test can be performed on undisturbed intact or precut specimens or compacted specimens at specified moisture contents and unit weights.

1.2 The test is not suited for the development of exact stress-strain relationships within the test specimen because of nonuniform distribution of shearing stresses and displacements. The slow rate of displacement provides for dissipation of excess pore pressures, but also permits plastic flow of soft, cohesive soils. Care should be taken that testing conditions represent field conditions being investigated.

2. Auxiliary Tests

2.1 The moisture content must be determined in accordance with USBR 5300 as a part of performing this test.

3. Applicable Documents

3.1 *USBR Procedures*:
USBR 1000 Standards for Linear Measurement Devices
USBR 1007 Calibrating Dial Indicators
USBR 1008 Calibrating Linear Variable Differential Transformers
USBR 1009 Calibrating Compaction Molds
USBR 1012 Calibrating Balances or Scales
USBR 1040 Calibrating Pressure Gauges
USBR 1045 Calibrating Force Transducers (Load Cells)
USBR 3900 Standard Definitions of Terms and Symbols Relating to Soil Mechanics
USBR 5210 Preparing Compacted Soil Specimens for Laboratory Use
USBR 5215 Preparing Soil Specimens for Laboratory Use From Undisturbed Samples
USBR 5300 Determining Moisture Content of Soil and Rock by the Oven Method
USBR 5320 Determining Specific Gravity of Soils
USBR 5330 Performing Gradation Analysis of Fines and Sand Size Fraction of Soils, Including Hydrometer Analysis
USBR 5350 Determining the Liquid Limit of Soils by the One-Point Method
USBR 5360 Determining the Plastic Limit and Plasticity Index of Soils
USBR 5365 Determining Shrinkage Limit and Shrinkage Ratio of Soils
USBR 5700 Determining the One-Dimensional Consolidation Properties of Soils (Incremental Stress)

4. Summary of Method

4.1 Residual shear strength of a clay or clay shale is determined.

4.1.1 A soil specimen is sheared under constant normal stress until the soil is in the residual strength state. Cyclic shearing is induced by reversing the direction of travel of a shear box half, relative to the other half. The failure surface is, in general, artificially developed by cutting the sample in half between the upper and lower shear box halves, but the failure surface may be formed also by the initial shearing action of the apparatus. The force required to shear the soil is measured as a function of horizontal displacement and normal stress. The vertical displacement is measured to monitor specimen volume change. The shear stress is computed and residual shear strength is determined from a plot of shear stress versus normal stress in the residual strength state.

4.1.2 Analysis of test results is made assuming significant pore pressures do not develop during the test. Therefore, it is essential that test specimens be sheared slowly enough to ensure that excess pore pressures do not develop during the test.

5. Significance and Use

5.1 Residual shear strength is one property of clay or clay shale which determines the potential for progressive (gradual loss of strength) slope failure.

5.2 Residual shear strength represents the resistance to shear along a fully developed failure surface.

5.3 In some cases, the residual shear strength of a material may be used for design purposes.

6. Terminology

6.1 Definitions are in accordance with USBR 3900.

6.2 Terms not included in USBR 3900 specific to this designation are:

6.2.1 *Nominal Shear Stress.*–The shear stress computed using the cross-sectional area of the shear box.

6.2.2 *Residual Shear Stress* (τ_r). The shear stress a material can sustain while undergoing continuous deformation at a constant effective normal stress.

6.2.3 *Residual Angle of Internal Friction* (ϕ_r).–The slope of the line relating nominal residual shear stress to normal stress, expressed in degrees.

6.2.4 *Residual Cohesion* (c_r).–The nominal shear stress intercept at zero normal stress of a line relating nominal residual shear stress to normal stress, expressed in lbf/in^2.

6.2.5 *Residual Strength State.*–The state of a soil when the shear stress has decreased to a constant value and is independent of displacement under a given normal stress.

6.2.6 *Seating Pressure.*–A pressure, usually about 1/2 to 2 lbf/in^2 (2 to 7 kPa), placed on the specimen to firmly seat all parts of the testing apparatus.

6.2.7 *Cumulative Horizontal Displacement.*–Sum of the absolute values of the displacement of one-half of the shear box relative to the other half.

7. Apparatus

7.1 *General Apparatus*:

7.1.1 *Balances or Scales.*–Typical balances or scales used for this designation are:

Application	*Readable to*	*Approximate capacity*
Moisture content	0.1 g	1000 g
Initial dry unit weight	1 g	4000 g

7.2 *Equipment Unique to This Procedure*:

7.2.1 *Repeated Direct Shear Apparatus.*–A device (fig. 1) to hold the specimen securely between two porous plates in such a way that torque is not applied to the specimen. The repeated direct shear apparatus must provide means for applying a normal stress to two opposite faces of the specimen, for measuring change in thickness of the specimen, for permitting drainage of water through porous plates, and for submerging the specimen in water. The apparatus must be capable of applying a shear force to the specimen along a predetermined plane parallel to the faces of the specimen that are subjected to normal stress. The device must be capable of reversing the direction of travel of the shear box. The frames that hold the specimen must be sufficiently rigid so they do not distort during shearing. The various parts of the repeated direct shear apparatus that come into contact with the specimen must be made of material—e.g., bronze, stainless steel, etc.—not susceptible to corrosion by moisture or substances within the soil.

7.2.2 *Shear Box.*–A shear box (fig. 2), usually made of stainless steel, bronze, or aluminum, provides for specimen drainage from top and bottom. The box is divided horizontally into halves of equal thickness which are fitted together with alignment screws. The shear box is fitted with gap screws that are used to adjust the space (gap) between the top and bottom halves of the shear box. Specimen size may vary, but a 2 or 3 inch (50 or 75 mm) square specimen is usually used.

7.2.3 *Normal Loading Device.*–Normal stress is applied by a lever loading arm and yoke or a pneumatic loading device capable of maintaining normal stress within ±1 percent of the specified normal stress throughout the test.

7.2.4 *Controlled Displacement Equipment.*–Displacement equipment must be capable of applying a wide range of horizontal displacement rates from approximately 0.0001 to 0.1 in/min (0.0025 to 2.5 mm/min) and must shear the specimen at a uniform rate of displacement not to exceed ±10 percent of the specified displacement rate. The equipment must be capable of reversing the direction of travel of the shear box.

7.2.5 *Shear Force Measurement.*–Shear force is measured by a load cell or proving ring. The accuracy of the device must be within ±0.25 percent of full scale.

7.2.6 *Displacement Measurement Devices.*–Horizontal and vertical displacements are measured using LVDTs (linear variable differential transformers) or other distance-measuring devices (dial gauges). The devices are to be readable to 0.001 inch (0.025 mm).

7.2.7 *Shear Box Bowl.*–Different kinds of shear box bowls are used (fig. 2a or 2d). One type simply holds the shear box in place (fig. 2a), and the shear box contains the porous plates for specimen drainage (fig. 2b). The other type (fig. 2d) holds the shear box in place and has a porous plate embedded in the bottom to allow drainage from the soil specimen.

7.2.8 *Reversing Microswitches.*–Switches, which when touched by a control bar (fig. 1), change the direction of travel of the shear box.

7.2.9 *Specimen Trimmer.*–A trimmer used to cut oversize samples to shear box dimensions (fig. 3).

7.2.10 *Porous Plates.*–Porous plates (two required) made of silicon carbide, aluminum oxide, or other materials not susceptible to corrosion from soil substances or moisture. Some porous plates are coarser on one side than on the other. The coarser side is to be placed against the soil specimen. The plates should be coarse enough to develop adequate interlock with the specimen but fine enough to prevent intrusion of soil into the pores. Exact criteria have not been established for this; however, permeability of the plate should be greater than permeability of the soil.

7.2.11 *Spacer Plate.*–Spacer plates (two required), 2- by 2- by 0.375-inch (50- by 50- by 9.5-mm) thick, not susceptible to corrosion from soil substances or moisture.

7.2.12 *Try square.*–A tool with a linear scale readable to 1/32 inch.

7.2.13 *Cover Plates.*–Plastic or glass plates either 2.25 or 4.25 inches (57 or 108 mm) square and 0.25-inch (6-mm) thick. They are to be marked as pairs.

7.2.14 *Time Device.*–Timing devices readable to ±1 second are used to record elapsed time.

7.2.15 *Humidity Room.*–A controlled humidity room should be used for storing samples as well as for preparing specimens so that moisture loss during preparation is minimized.

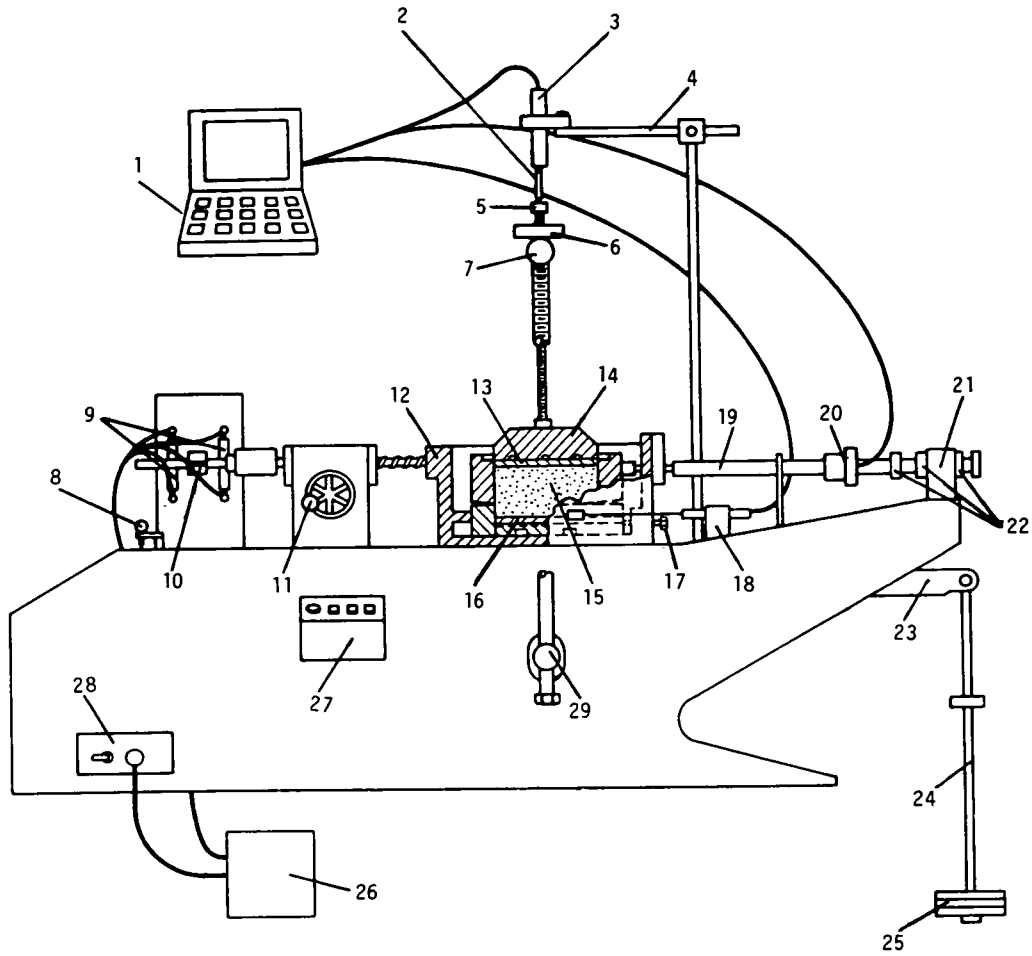

1. Data acquisition system
2. LVDT core
3. LVDT body
4. Consolidation LVDT arm
5. Yoke adjustment screw
6. Vertical yoke adjustment nut
7. Loading yoke
8. Gear change lever
9. Reversing microswitches
10. Reversing switch control bar
11. Handwheel
12. Shear box bowl
13. Top porous plate
14. Load transfer plate
15. Specimen
16. Bottom porous plate
17. Shear box lock screw
18. Horizontal strain LVDT bracket
19. Load cell coupling rod
20. Load cell retaining bolts
21. Tailstock
22. Adjusting nuts
23. Lever loading arm
24. Load hanger
25. Masses
26. Automatic reversing switch relays
27. Control panel
28. Selector switch — manual/automatic
29. Loading yoke pivot

Figure 1. – Schematic of repeated direct shear apparatus.

7.2.16 *Automatic Data Acquisition and Reduction System.*–Any automatic data acquisition and/or reduction (computer) must be accomplished using a system capable of maintaining the accuracy of the individual measurement instruments.

7.3 *Miscellaneous Equipment.*–Trimming equipment (USBR 5215), compaction equipment (USBR 5210), level, ruler, screwdriver, Allen wrench, moisture-proof specimen containers for trimmings, distilled water, U.S.A. Standard series No. 4 (4.75 mm) sieve, and modeling clay.

8. Reagents and Materials

8.1 Distilled water is to be used whenever water is required.

9. Precautions

9.1 *Technical Precautions*:

9.1.1 Clean the porous plates after each test to remove soil particles or any other impurities that might impede waterflow into or out of the specimen.

9.1.2 Ensure that the gap between the top and bottom halves of the shear box is 0.025 inch (0.64 mm). A larger gap may cause excessive extrusion of material as the test progresses. A smaller gap may result in the top and bottom halves coming into contact with each other.

9.1.3 A test specimen of largest practical size obtainable from a given soil sample should be used to perform the test.

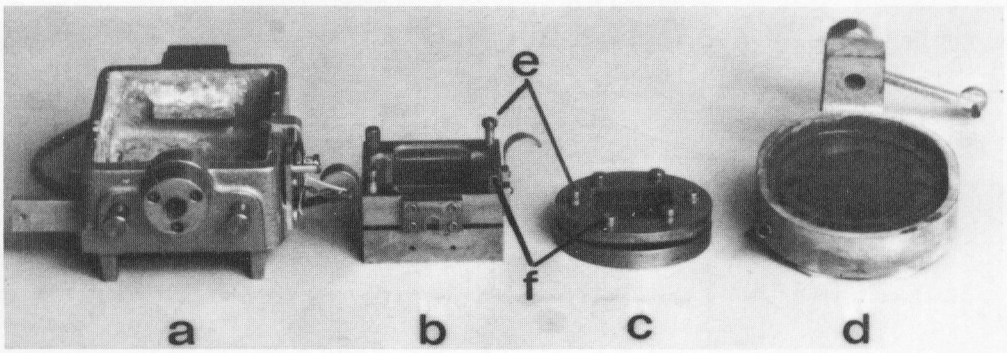

Note: Gap screws have screw driver heads, alignment screws have Allen heads, as shown.

Figure 2. – Shear box bowls with associated shear boxes with gap and alignment screws installed, (a) shear box bowl, (b) shear box with removable bottom porous plate, (c) shear box, (d) shear box with bottom porous plate attached, (e) gap screws, and (f) alignment screws.

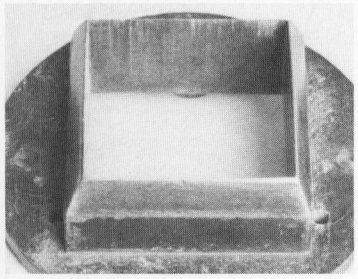

Figure 3. – Specimen trimmer bit.

10. Sampling, Test Specimens, and Test Units

10.1 The soil sample from which specimens are prepared should be large enough so that similar specimens may be obtained if further testing is required. Prepare specimens in a controlled humidity room to minimize excess moisture gain or loss. Extreme care should be taken in preparing undisturbed specimens of sensitive soils to prevent disturbance of their natural structure.

10.2 The different types of specimens that may be used, depending upon testing requirements are:

10.2.1 *Undisturbed.*–An undisturbed specimen is cut from an undisturbed sample (e.g., a block or tube sample) and can be tested either intact or with a precut failure surface. Prepare undisturbed specimens in accordance with USBR 5215.

10.2.1.1 Intact.–An intact specimen is sheared in the testing device so that residual shear stress is measured on a surface formed naturally by the shearing action.

10.2.1.2 Precut.–A specimen of intact material (at natural moisture content) is cut into halves which are placed together, forming a failure surface which is initially plane.

10.2.2 *Compacted.*–Initially, the material is disaggregated and then compacted to a specified dry unit weight at a predetermined moisture content. The specimen can be tested intact or with a precut failure surface. Prepare compacted specimens in accordance with USBR 5210.

10.3 *Specimen Preparation*:

10.3.1 *Undisturbed Intact Soil Specimens.*–There are several ways to prepare specimens for this procedure. The method described is recommended because it causes least disturbance to a specimen.

NOTE 1.–See USBR 5215 for more detailed information on preparing undisturbed soil specimens.

10.3.1.1 Record all required specimen information on the "Direct Shear Testing—Data Sheet 1, Specimen Information" form as shown on figure 4, including the location of the specimen in the original sample. Under *Remarks*, record a physical description of the soil; include such features as silt varves, fractures, slickensides, etc. Note any difficulties encountered while trimming the specimen.

10.3.1.2 Assemble the shear box (see note 2).

NOTE 2.–Before assembling the shear box, inspect the alignment screws, gap screws, and the hole for each screw for soil or other contaminants. If necessary, clean the threads with a tap or die to ensure that the two halves of the shear box will fit flush with each other. Additionally, ensure that the insides of both halves of the shear box are clean and free of any obstructions (such as pins which may be present to hold removable porous plates in place) and that the gap screw holes are in proper alignment.

10.3.1.3 Determine the dimensions of the specimen. If the specimen will completely fill the shear box, measure and record the inside dimensions of the shear box to the nearest 0.1 inch. If a circular specimen is to be tested, measure the diameter of the specimen at several locations with calipers. Record the average measurement as *Specimen dimensions*.

10.3.1.4 Measure and record the height of the inside of the assembled shear box. If a shear box with a removable bottom porous plate is used, ensure that the measurement is taken from the top of the porous plate which is placed into the shear box. Take two measurements and average them. Record the average measurement as *Height of specimen*.

7-2356 (8-86)
Bureau of Reclamation

DIRECT SHEAR TESTING - DATA SHEET 1
SPECIMEN INFORMATION

Designation USBR 5726-89

SAMPLE NO. Example PROJECT Example FEATURE Example

DRILL HOLE DH - 8 LOCATION Area H DEPTH 10.0 - 20.0 ☒ ft ☐ m

TEST TYPE: ☐ DIRECT SHEAR ☒ REPEATED DIRECT SHEAR ☒ ROTATIONAL SHEAR

TESTED BY _____ DATE _____ COMPUTED BY _____ DATE _____ CHECKED BY _____ DATE _____

SPECIMEN DATA

SPECIMEN NO. Example SPECIMEN DIMENSIONS 2.0 x 2.0 x 1.0 ☒ in ☐ mm

SPECIMEN TYPE: ☐ COMPACTED ☒ UNDISTURBED ☐ SLURRIED

SLIDING SURFACE: ☐ INTACT ☒ PRECUT ☐ OTHER _____

SOIL CLASSIFICATION SYMBOL CH
PERCENT GRAVEL 0
PERCENT SAND 20
PERCENT FINES 80

LIQUID LIMIT 79 (%)
PLASTICITY INDEX 21 (%)
SPECIFIC GRAVITY 2.44
SOIL CONSISTENCY (NO. OF BLOWS) —

MOISTURE CONTENT DETERMINATION

	INITIAL (TRIMMINGS)		FINAL (SPEC.)	
CONTAINER NO.	231		671	
MASS OF CONTAINER AND WET SPECIMEN	531.7	g	476.0	g
MASS OF CONTAINER AND DRY SPECIMEN	490.2	g	441.2	g
MASS OF CONTAINER	302.4	g	305.6	g
MASS OF WATER	41.5	g	34.8	g
MASS OF DRY SPECIMEN	187.8	g	135.6	g
MOISTURE CONTENT	22.1	%	25.7	%

INITIAL DRY UNIT WEIGHT DETERMINATION

MASS OF SHEAR BOX + COVER PLATES	1925.1	g	
MASS OF SHEAR BOX + COVER PLATES + WET SOIL	2090.3	g	
MASS OF WET SOIL	165.2	g	
MASS OF DRY SOIL = (MASS OF WET SOIL)/(1 + INITIAL MOISTURE CONTENT/100)	135.3	g	
INSIDE AREA OF SHEAR BOX	4.00	☐ mm^2	☒ in^2
HEIGHT OF SPECIMEN	1.32	☐ mm	☒ in
VOLUME = (AREA x HEIGHT OF SPECIMEN)	5.28	☐ mm^3	☒ in^3
INITIAL DRY UNIT WEIGHT = (C* x MASS OF DRY SOIL/VOLUME)	97.6	☐ kN/m^3	☒ lbf/ft^3

*For SI metric application, C=.009807, which converts g/mm^3 to kN/m^3
For inch-pound application, C=3.810, which converts g/in^3 to lbf/ft^3.

REMARKS: Fat Clay, Gray - Brown, Iron Staining On Fracture Surfaces, Hard To Trim.

Figure 4. - Direct shear testing—data sheet 1, specimen information—example.

10.3.1.5 Determine the mass of the assembled shear box plus cover plates to the nearest 0.1 gram. If a shear box with a removable bottom porous plate is used, also determine the mass of the porous plate. Record the mass on data sheet 1 as *Mass of shear box + cover plates*.

10.3.1.6 If the specimen to be trimmed is cut from a parent sample, the width or diameter of the test sample should be about 1 to 2 inches (25 to 50 mm) greater than the diagonal dimension of the shear box and the height of the test sample should be about 1 to 2 inches longer than the combined thickness of the shear box and specimen trimmer if enough sample is available.

10.3.1.7 Level the top and bottom of the sample.

10.3.1.8 Place the sample on a clean sturdy platform.

10.3.1.9 Wax the bottom of the sample to the platform to ensure that it will not move excessively during trimming.

10.3.1.10 Center and level the trimmer bit on top of the sample. Place the cutting spacer adapter on top of the trimmer bit. Insert the cutting rod into the cutting spacer adapter. The complete cutting assembly with soil sample is shown on figure 5.

10.3.1.11 Using the cutting lever, push the trimmer bit vertically into the sample no more than 1/4 inch (6 mm).

10.3.1.12 While maintaining a slight downward pressure with the cutting lever, trim the soil as close to the trimmer bit as possible without cutting through the vertical projection of the cutting edge of the trimmer bit to the platform. Trim the soil at least 1 inch (25 mm) below the bit and maintain a slight outward slope to avoid undercutting the specimen. Push the trimmer down into the sample about 1/4 inch.

10.3.1.13 Repeat subparagraph 10.3.12 until the specimen protrudes about 1/4 inch above the top one-half of the trimmer bit.

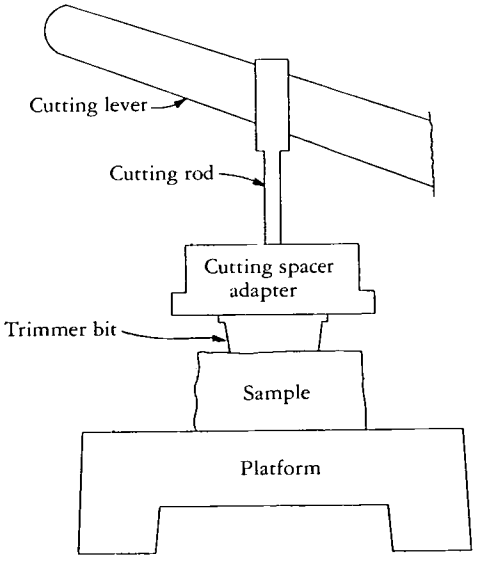

Figure 5. - Cutting assembly with soil sample.

10.3.1.14 With a knife, wire saw, or other appropriate tool, carefully separate the specimen—now contained within the trimmer bit—from the sample. If the trimmer bit has been pushed entirely through the sample to the platform, carefully separate the specimen from the platform.

10.3.1.15 Remove the cutting rod and spacer adapter.

10.3.1.16 With a knife, wire saw, or other appropriate tool, screed off any portion of the specimen which protrudes from the top of the trimmer bit.

10.3.1.17 Place a 1/4-inch thick spacer plate on top of the specimen.

10.3.1.18 Invert the trimmer bit with spacer plate and specimen and place on the platform.

10.3.1.19 Push down on the trimmer bit until the spacer plate is flush with the top of the trimmer.

10.3.1.20 With a knife, wire saw, or other appropriate tool, screed off any portion of the specimen which protrudes from the bottom of the trimmer bit.

10.3.1.21 The specimen is now ready to be inserted into the shear box. If the shear box has a removable bottom porous plate, place as described in subparagraph 10.3.1.22. If the shear box does not have a removable bottom porous plate, place as described in subparagraph 10.3.1.23.

10.3.1.22 Shear box with removable bottom porous plate:

10.3.1.22.1 Place a moist porous plate on the bottom of the specimen.

10.3.1.22.2 Invert the trimmer bit with porous plate, specimen, and spacer plate and push down on the trimmer bit until the porous plate is flush with the bottom of the trimmer bit.

10.3.1.22.3 Carefully remove the spacer plate from the top of the specimen.

10.3.1.22.4 Carefully align and attach the bottom of the shear box to the top of the trimmer bit using two screws.

10.3.1.22.5 With the shear box lower plate on the platform, align the shear box and trimmer bit with specimen and porous plate over the lower plate and push down until the lower plate is flush with the bottom of the trimmer bit.

10.3.1.22.6 Align this assembly over a 1.25-inch (32-mm) thick spacer and push down until the bottom of trimmer bit is flush with the platform.

10.3.1.22.7 Push in the retaining pins (see fig. 6) to lock the lower plate and porous plate in place.

10.3.1.22.8 Remove the shear box from the trimmer bit, cover the top and bottom of the shear box with cover plates, and proceed to subparagraph 10.3.1.24.

10.3.1.23 Shear box without removable bottom porous plate:

10.3.1.23.1 Invert the trimmer bit with specimen and spacer plate and carefully align and attach the bottom of the shear box to the trimmer bit using two screws.

10.3.1.23.2 Align this assembly over a 1.25-inch thick spacer and push down until the bottom of the trimmer bit is flush with the platform.

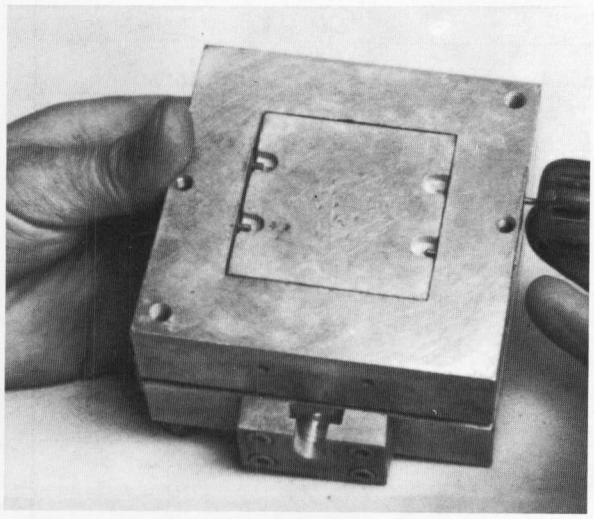

Figure 6. – Pushing in retaining pins over a correctly positioned lower plate.

10.3.1.23.3 Carefully remove the 1/4 inch spacer plate from the top of the specimen in the shear box.

10.3.1.23.4 Carefully remove the trimmer bit with 1.25-inch spacer from the shear box.

10.3.1.23.5 Immediately cover the top and bottom of the shear box with cover plates.

10.3.1.24 Retain trimmings in labeled, airtight containers for other laboratory tests as required.

10.3.1.25 Determine the initial moisture content and specific gravity of the specimen from specimen trimmings in accordance with USBR 5300 and 5320, respectively. Results of the initial moisture content determination should be computed on data sheet 1 (fig. 4).

10.3.1.26 If required, determine and record on data sheet 1 (fig. 4): soil classification; percentages of gravel, sand, and fines; liquid limit; plasticity index; and specific gravity.

10.3.1.27 Determine and record the initial dry unit weight of the specimen in the shear box.

10.3.1.27.1 Determine and record to the nearest 0.1 gram on data sheet 1 (fig. 4) the *Mass of shear box + cover plates + wet soil.*

10.3.1.27.2 Calculate and record *Mass of wet soil.*

10.3.1.27.3 Calculate and record *Mass of dry soil* by dividing the *Mass of wet soil* by [1 + (initial moisture content in percent / 100)].

10.3.1.27.4 Calculate density by dividing mass of dry soil by volume and then multiplying by the appropriate constant to convert to dry unit weight in either kN/m^3 or lbf/ft^3. Record the *Initial dry unit weight* of the specimen to the nearest 0.1 lbf/ft^3 or kN/m^3.

10.3.2 *Undisturbed Precut Soil Specimens*:

10.3.2.1 The procedure is essentially the same as that described in subparagraph 10.3.1, except a failure plane is formed by cutting the specimen into halves in the space between the shear box halves after the trimmer has been removed. The method of cutting depends on the type of material being tested.

10.3.2.1.1 For soft specimens, a failure plane may be cut with a small diameter [0.008 to 0.014 in (0.20 to 0.36 mm)] steel-wire saw at the space between the upper and lower shear box halves once the specimen has been trimmed to size.

10.3.2.1.2 For stiff specimens, the failure plane may be cut through the sample with a bandsaw prior to trimming. If this is done, the cut sample will have to be trimmed until the precut failure plane is in the middle of the space between the upper and lower halves of the shear box.

10.3.2.2 Separate the shear box halves completely after trimming and/or cutting, and smooth the failure planes with a straightedge.

10.3.2.3 Moisten the precut plane with distilled water. Put the shear box halves back together.

10.3.2.4 With a knife, wire saw, or other appropriate tool, remove the portion of the specimen which protrudes above and below the shear box. Trim the specimen with a straightedge to ensure planeness. Immediately cover the top and bottom of the shear box with cover plates.

10.3.2.5 Retain trimmings in labeled, suitably airtight containers for other laboratory tests as required.

10.3.2.6 To determine the physical properties, initial moisture content, and initial dry unit weight of the specimen, use subparagraphs 10.3.1.25 through 10.3.1.27.4.

10.3.3 *Compacted Specimens*:

NOTE 3.–See USBR 5210 for more detailed information on preparing compacted soil specimens.

NOTE 4.–If required, soil may be compacted as outlined in USBR 5210, extruded from the mold, and a test specimen trimmed as outlined in subparagraph 10.3.1 or 10.3.2.

10.3.3.1 Assemble the shear box (see note 2).

10.3.3.2 Attach compaction top to shear box.

10.3.3.3 Attach shear box to compaction base.

10.3.3.4 Pass the sample through a No. 4 (4.75 mm) sieve. Retain the minus No. 4 material in a labeled, airtight container. Unless otherwise instructed, only minus No. 4 material should be used for the compacted specimen. Determine the moisture content of the minus No. 4 material in accordance with USBR 5300. Check the measured moisture content against the moisture content specified for the compacted specimen. If the difference is greater than ±0.5 percentage point, correct the moisture content. This may be done by adding water to the sample if it is too dry or air drying the sample if it is too moist. The amount of water to add to the sample to achieve the correct moisture content can be determined as shown on figure 7.

10.3.3.5 If the calculated mass of water to be added is positive, add the indicated amount. If the calculated mass of water to be added is negative, dry the sample until the necessary mass loss has been achieved. If water was

7-2327 (10-85)
Bureau of Reclamation

ADDED WATER DETERMINATION

Designation USBR - 5726 - 8 9

SAMPLE NO.	PROJECT	FEATURE
Example	Example	Example

COMPUTED BY	DATE	CHECKED BY	DATE

Specimen No.	Moisture Content %			Mass g				
	Initial (1)	Desired (2)	Difference (3)	Specimen and Container (4)	Container (5)	Specimen (6)	Dry Mass of Specimen (7)	Water to Add (8)
52	16.8	22.0	5.2	887.6	162.3	725.3	621.0	32.3
			(2) – (1)			(4) – (5)	$100\left[\frac{(6)}{100+(1)}\right]$	$(7)\left[\frac{(3)}{100}\right]$

Remarks: Specimen used for repeated direct shear testing.

Auxiliary Tests:

USBR 5300 - 8 9

GPO 848-762

Figure 7. – Added water determination—example.

added to the sample, place it in a labeled, airtight container for at least 16 hours before compacting it.

10.3.3.6 Again determine the moisture content in accordance with USBR 5300. Check this moisture content against the moisture content specified. If the difference is greater than ±0.5 percentage point correct the moisture content until it is within the acceptable range.

10.3.3.7 Thoroughly mix the soil sample.

10.3.3.8 Determine the mass of moist soil required to obtain the specified specimen dry unit weight.

10.3.3.8.1 To determine the total amount of soil required, and the amount of soil per layer, the following steps may be used in the inch-pound system of units:

10.3.3.8.2 Wet unit weight = (dry unit weight) × [(1 + (moisture content) / 100)].

10.3.3.8.3 Convert wet unit weight to wet density by changing lbf/ft³ to lbm/ft³ and record to the nearest 0.1 lbm/ft³ (assume 1 lbf = 1 lbm).

10.3.3.8.4 Mass of soil required equals wet density times volume of specimen (volume inside shear box).

10.3.3.8.5 Mass of soil per layer equals the mass of soil divided by the number of layers. (Typically, three layers are used when compacting a repeated direct shear specimen.)

10.3.3.9 Obtain the required mass of moist soil per layer as calculated in subparagraph 10.3.3.8.5 and place it into the shear box.

10.3.3.10 Spread the soil to a uniform depth and level the surface by pressing down lightly with a wood plunger or other suitable tamper.

10.3.3.11 Compact each soil layer using an appropriate size tamper and mallet; i.e., for a 2- by 2-inch (50- by 50-mm) shear box, use a tamper that is slightly undersize.

10.3.3.12 Place the tamper on top of the soil, and using the mallet, compact the soil to the required height.

NOTE 5.–It is recommended that the tamper used be scribed to indicate the appropriate height for each layer compacted. This helps to ensure a more uniform placement dry unit weight of the test specimen.

10.3.3.13 Repeat subparagraphs 10.3.3.9 through 10.3.3.12 until all the soil calculated in subparagraph 10.3.3.8.4 has been compacted into the shear box.

10.3.3.14 Remove the compaction top from the shear box and trim any portion of the specimen that protrudes above the shear box with a straightedge to ensure planeness. Save the trimmings and store them in an airtight container.

10.3.3.15 Remove the shear box from the compaction base and trim any portion of the specimen which protrudes below the shear box with a straightedge to ensure planeness. Immediately cover the top and bottom of the shear box with cover plates.

10.3.3.16 Determine and record the physical properties, initial moisture content, and initial dry unit weight of the specimen by repeating subparagraphs 10.3.1.25 through 10.3.1.27.4.

11. Calibration and Standardization

11.1 Verify that equipment is currently calibrated in accordance with the applicable calibration procedure. If the calibration is not current, perform the calibration before using the equipment for this procedure.

USBR 1007 Calibrating Dial Indicators
USBR 1008 Calibrating Linear Variable Differential Transducer
USBR 1040 Calibrating Pressure Gauges
USBR 1045 Calibrating Force Transducer (Load Cells)

11.2 Calibrate the normal loading device annually by loading a calibrated load cell placed in the shear box.

11.2.1 If a lever loading arm and yoke is used, the vertical force recorded by the load cell is:

$$W = C_n\ m \qquad (1)$$

where:

W = vertical (normal) force acting on the specimen, lbf (assume 1 lbm = 1 lbf)
C_n = lever loading arm constant for the pneumatic loading device (2.5 for most machines)
m = hanger mass, lbm (assume 1 lbm =1 lbf)

11.2.1.1 If C_n is not equal to 2.5, calculate a new constant by the relation $C_n = W/m$, after ensuring that the load cell is properly calibrated.

11.2.2 If a pneumatic loading device is used, W is the vertical force which corresponds to the pressure reading on a calibrated pressure gauge.

11.2.2.1 If the force recorded by the load cell does not equal the force determined by the pressure gauge (i.e., C_n = 1.0) then the load cell or the pressure gauge, or both, may need recalibration.

12. Preparation of Apparatus

12.1 Center the shear box bowl (fig. 1, part 12) using the handwheel (part 11).

12.2 Place the shear box with specimen into the shear box bowl. Ensure it is properly seated and oriented. Make sure that the porous plates (parts 13 and 16) are moist.

12.2.1 For some types of apparatus, the top half of the shear box is held in place by a notched rod connected to a load cell, which fits into a receptacle in the top half of the shear box. The bottom half of the shear box is held in place by a lock screw (part 17). When a shear load is applied to the specimen, the bottom half of the shear box is moved and the top half is held stationary.

12.2.2 For some types of apparatus, the top half is held in place by a top anchoring plate. Adjust the anchoring plate so that it is tight against the 0.08-inch (2-mm) thick spacer between the plate and frame by tightening the anchoring plate retaining bolts.

12.3 Adjust the load-cell coupling rod (part 19) by turning the adjusting nuts (part 22) so the shear box bowl is held rigid, but load is not imposed on the load cell.

12.4 Properly position and adjust the horizontal displacement measurement device, such as a dial gauge

or LVDT, held by part 18. The LVDT is adjusted until a zero reading is obtained.

NOTE 6.–If a computer is used to read LVDT values, execute the necessary keystrokes to display the LVDT values and position the LVDT back and forth until the reading is zero.

12.5 Place a moist porous plate on top of the specimen (see subpar. 7.2.10).

12.6 Place the load transfer plate (part 14) in place over the top of the porous plate (part 13).

12.7 Put the loading yoke (part 7) in position and adjust it so the top bar is level.

12.8 For dead-load lever arm loading systems, turn the yoke adjustment screw (part 5) against the recess in the load transfer plate (part 14) so the lever loading arm (part 23) is level. For pneumatic loading systems, turn the yoke adjustment screw until it is fairly tight against the recess in the load transfer plate. If there is no yoke adjustment screw then place a ball bearing of appropriate size in the recess in the load transfer plate and adjust the yoke so it is snug against the ball bearing.

12.9 Apply a 1/2 to 2 lbf/in^2 (3.5 to 14 kPa) pressure (seating pressure) on the specimen and make certain that all components of the loading system are properly seated and aligned. Ensure the top porous plate and load transfer plate are aligned so their movement into the shear box will not be inhibited.

12.10 Center the reversing switch control bar (part 10) between the reversing microswitches (part 9).

12.11 Put a vertical displacement measurement device—such as a dial gauge or LVDT—in place. Position it so it bears on the top of the yoke adjustment screw.

12.12 Adjust the vertical displacement measurement device until an initial zero reading is obtained (see note 6).

12.13 Check the entire apparatus to ensure that the equipment is properly aligned, seated, zeroed, etc.

NOTE 7.–If a computer is used, initialize it. This entails ensuring that the storage registers are empty. If they are not, old data should be purged. However, make sure a permanent copy of the old data is available before purging.

12.14 If required, fill the shear box bowl with distilled water and keep it full for the duration of the test.

NOTE 8.–If a computer is used, execute the necessary keystrokes to enter the specimen physical properties and other specimen data as required.

13. Conditioning

13.1 Specimens should be prepared in a controlled humidity room to minimize excessive moisture gain or loss.

13.2 Prior to testing, the sample should be stored in such a manner as to prevent: (a) contamination with other matter, (b) loss of soil, (c) loss of moisture, or (d) loss of identification.

13.3 If water is added to the soil sample to bring it to a specified moisture content, the wetted soil should be placed in an airtight container for approximately 16 hours prior to compacting a test specimen.

14. Procedure

14.1 All data are to be recorded on the "Direct Shear Testing" form as shown on figure 8 (data sheet 2a).

14.2 *Consolidation*:

14.2.1 Calculate and record the normal load required to achieve the required normal stress. Apply the required normal stress, or increment thereof, by adding the necessary masses to the hanger or by adjusting the pneumatic pressure regulator so the necessary normal stress is achieved (see subpar. 15.1.3). Always begin with the lowest normal stress and proceed to the highest.

NOTE 9.–The normal stress applied to the specimen depends upon the information required. Application of the normal stress in one increment may be appropriate for relatively firm soils. For relatively soft soils, however, several increments may be necessary to prevent damage to the specimen. The initial increment depends upon the strength and sensitivity of the soil. The normal stress should not be so large as to squeeze the soil out of the gap between the shear box halves.

14.2.2 Allow the specimen to drain and consolidate under the desired normal stress, or increment thereof, until the specimen is in a well-defined stage of secondary consolidation. A computer can be used to automatically record time and vertical displacement readings; otherwise, manually record readings (fig. 8).

14.2.2.1 Refer to USBR 5700 for guidelines on determining stages of primary consolidation and secondary consolidation.

14.2.2.2 Plot vertical displacement versus square root of time to confirm that primary consolidation has occurred (fig 9).

14.2.3 After the specimen has consolidated, turn the gap screws clockwise until they contact the bottom half of the shear box. Remove the alignment screws (if water starts to drain out, plug the holes with Plasticine or clay) and turn the gap screws one-half turn (for screws with 20 threads/inch) clockwise, which lifts the top half of the shear box 0.025 inch (0.64 mm).

14.2.4 Turn the gap screws counterclockwise (outward) four full turns.

14.3 *Shearing Procedure*:

14.3.1 If a computer was used to obtain and record consolidation readings, reinitialize it (see note 7).

14.3.2 Set the desired horizontal displacement rate.

14.3.2.1 For some types of apparatus, the displacement rate is achieved using combinations of gear wheels and gear lever position as shown on figure 10a. For other types, the displacement rate is achieved by turning a control knob on an electronic control box to the desired position as shown on figure 10b.

14.3.3 Set the reading interval on the computer or other recording device to the reading interval specified.

14.3.3.1 The reading interval depends on the displacement rate. For a displacement rate of 0.005 in/min,

7-2357 (8-89)
Bureau of Reclamation

DIRECT SHEAR TESTING - DATA SHEET 2a

DIRECT SHEAR AND REPEATED DIRECT SHEAR

Designation USBR 5726-89

SAMPLE NO. Example SPECIMEN NO. Example TEST TYPE: ☐ DIRECT ☒ REPEATED ☐ SLIDING FRICTION MACHINE NO. 3

SPECIMEN DIMENSION 2 x 2 x 1 ☒ in ☐ cm SPECIMEN AREA 4.0 ☒ in^2 ☐ cm^2 NOMINAL NORMAL STRESS 12.5 ☒ lbf/in^2 ☐ kPa

DISPLACEMENT RATE 0.0005 ☒ in/min ☐ cm/min LOAD CELL FACTOR 1.000 ☒ lbf/V ☐ N/V LVDT FACTOR 1.000 ☒ in/V ☐ mm/V

TESTED BY _____ DATE _____ COMPUTED BY _____ DATE _____ CHECKED BY _____ DATE _____

READING NO.	DATE 1989	TIME hr	TIME min	TIME s	ELAPSED TIME min	VERTICAL DISPLACEMENT READING V	VERTICAL DISPLACEMENT DISPLACEMENT ☒ in ☐ mm	NORMAL FORCE READING V	NORMAL FORCE FORCE ☒ lbf ☐ N	HORIZONTAL DISPLACEMENT READING V	HORIZONTAL DISPLACEMENT DISPLACEMENT ☒ in ☐ mm	DISPLACEMENT CHANGE ☒ in ☐ mm	CUMULATIVE HORIZONTAL DISPLACEMENT ☒ in ☐ mm	RELATIVE LATERAL DISPLACEMENT %	SHEAR FORCE READING V	SHEAR FORCE FORCE ☒ lbf ☐ N	NOMINAL SHEAR STRESS ☒ lbf/in^2 ☐ kPa
1	4/1	09	54	51	0.0	0.000	0.000	50.0	50.0	-0.021	-0.021	0.000	0.000	0.000	0.0	0.0	0.000
2	4/1	09	55	21	0.5	0.010	0.010	50.0	50.0	-0.021	-0.021	0.000	0.000	0.00	0.0	0.0	0.000
3	4/1	09	55	51	1.0	0.015	0.015	50.0	50.0	-0.021	-0.021	0.000	0.000	0.00	0.0	0.0	0.000
4	4/1	09	56	51	2.0	0.020	0.020	50.0	50.0	-0.021	-0.021	0.000	0.000	0.00	0.0	0.0	0.000
5	4/1	09	57	51	3.0	0.025	0.025	50.0	50.0	-0.021	-0.021	0.000	0.000	0.00	0.0	0.0	0.000
6	4/1	09	58	51	4.0	0.027	0.027	50.0	50.0	-0.021	-0.021	0.000	0.000	0.00	0.0	0.0	0.000
7	4/1	10	04	51	10.0	0.029	0.029	50.0	50.0	-0.021	-0.021	0.000	0.000	0.00	0.0	0.0	0.000
8	4/1	10	14	51	20.0	0.029	0.029	50.0	50.0	-0.021	-0.021	0.000	0.000	0.00	0.0	0.0	0.000
9	4/1	10	34	51	40.0	0.030	0.030	50.0	50.0	-0.021	-0.021	0.000	0.000	0.00	0.0	0.0	0.000
10	4/1	10	54	51	60.0	0.030	0.030	50.0	50.0	-0.021	-0.021	0.000	0.000	0.00	0.0	0.0	0.000
Touch																	
11	4/1	11	58	51	0	0.030	0.030	50.0	50.0	-0.021	-0.021	0.000	0.000	0.00	-21.2	-21.2	-5.300
12	4/1	12	42	52	44.0	0.030	0.030	50.0	50.0	-0.041	-0.041	0.020	0.020	1.00	-21.5	-21.5	-5.375
13	4/1	13	26	52	88.0	0.030	0.030	50.0	50.0	-0.062	-0.062	0.021	0.041	2.05	-22.2	-22.2	-5.550
14	4/1	14	10	52	132.0	0.030	0.030	50.0	50.0	-0.082	-0.082	0.020	0.061	3.05	-22.5	-22.5	-5.625
15	4/1	14	54	52	176.0	0.030	0.030	50.0	50.0	-0.102	-0.102	0.020	0.081	4.05	-22.8	-22.8	-5.700
16	4/1	15	38	52	220.0	0.030	0.030	50.0	50.0	-0.123	-0.123	0.021	0.102	5.10	-23.4	-23.4	-5.850
17	4/1	16	22	52	264.0	0.030	0.030	50.0	50.0	-0.143	-0.143	0.020	0.122	6.10	-23.9	-23.9	-5.975
18	4/1	16	44	52	286.0	0.030	0.030	50.0	50.0	-0.154	-0.154	0.011	0.133	7.20	-25.1	-25.1	-6.275
19	4/1	20	12	52	494.0	0.030	0.030	50.0	50.0	-0.143	-0.143	0.011	0.144	8.20	23.8	23.8	5.950

REMARKS: _____

GPO 830 415

Figure 8. - Direct shear testing—data sheet 2a—example.

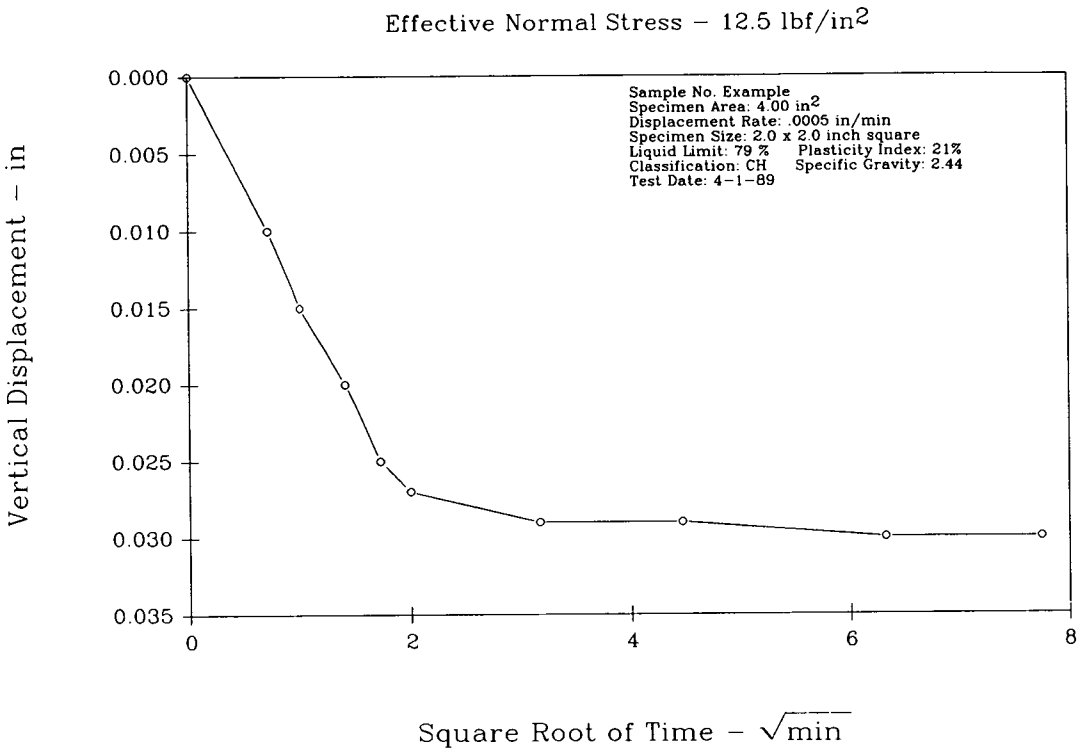

Figure 9. – Vertical displacement versus square root of time plot—example.

take readings every 5 minutes. For 0.0005 in/min, take readings every 30 minutes or as specified by the responsible engineer.

14.3.4 Read and record the time of each reading, the horizontal and vertical displacements, and the shear force. Record a reading at the midpoint of the shearing cycle; i.e., when the shear box halves are vertically aligned, and at each reversal of the direction of travel of the shear box. If a computer is used for data acquisition, execute the necessary keystrokes on the computer terminal so the computer starts recording the required readings. Ensure that an initial reading set is taken for use as initial values. If a computer is not available, manually record the prescribed readings as shown on figure 8.

14.3.5 Start the apparatus to begin shearing.

14.3.6 As shearing proceeds, calculate and record the cumulative horizontal displacement and the nominal shear stress as shown on data sheet 2a (fig. 8).

NOTE 10.–If automatic data acquisition equipment is used to record readings, the cumulative horizontal displacement may also be calculated by multiplying the number of readings by the reading interval, provided that the reading interval remains constant throughout the test.

14.3.6.1 When the shear stress is fairly constant and sufficient horizontal displacement has occurred to form a fully developed failure surface, the soil is in a residual strength state. The process may require several reversals of the moving shear box half to reach this state. The moving shear box half is automatically reversed by a microswitch after a predetermined displacement (about 0.15 in) has occurred.

14.3.7 Check the spacing between the shear box halves at least once a day, preferably just after the specimen has gone through the zero displacement point (i.e., the point at which the top and bottom halves are aligned). Do not readjust the spacing between shear box halves just before or when the specimen is at the zero displacement point.

14.3.7.1 As material is worn away in the zone of shearing, the gap between the shear box halves will be reduced. Reduction in the gap may cause an increase in the measured shear force. Because of the smaller gap, the gap screws will come in contact with the lower half of the shear box in less than four clockwise turns. Therefore, to maintain the required gap between shear box halves, turn the gap screws four turns clockwise to widen the gap, and then retract the screws by turning them four full turns counterclockwise so they do not touch the other half of the shear box.

14.3.8 After the soil is in a well-defined residual strength state (or as instructed by the responsible engineer), stop the apparatus, and manually realign the shear box halves with the handwheel (fig. 1, part 11). Do not remove the normal stress.

14.3.9 Replace the alignment screws and tighten them until the shear box halves are together. Apply the

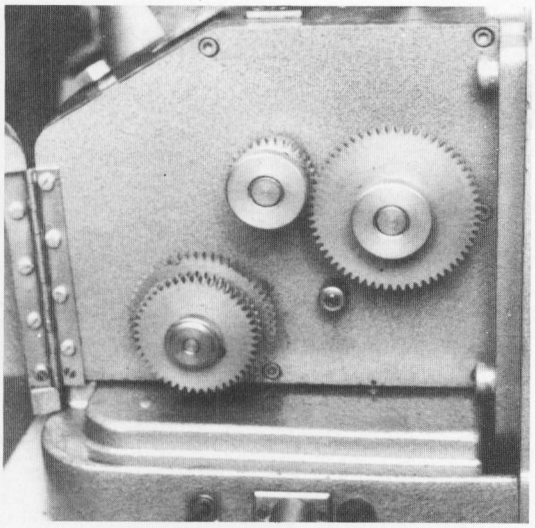

(a) Gear wheel combination for controlling the displacement rate.

(b) Electronic control box for controlling the displacement rate.

Figure 10. – Displacement rate control.

next higher load (normal stress) and follow the consolidation and shearing procedures outlined in subparagraphs 14.2 and 14.3, respectively.

14.4 *Concluding the Test Program*:

14.4.1 After all of the specified normal stresses have been applied and all data have been recorded, turn off the motor.

14.4.2 Realign the shear box halves with the handwheel.

14.4.3 Remove the normal stress from the specimen.

14.4.4 Remove the shear box from the shear box bowl.

14.4.5 Separate the shear box halves with a sliding motion parallel to the failure plane. Do not pull the shear box halves apart perpendicularly to the failure surface.

14.4.6 Photograph the failure surface.

14.4.7 Remove the specimen from the shear box and determine the moisture content of the entire specimen in accordance with USBR 5300. Record on data sheet 1 (fig. 4) as *Moisture content, final (spec.)*.

14.4.8 Thoroughly clean all apparatus surfaces that came in contact with the test specimen.

14.4.9 Make note of anything unusual observed during the test program.

14.4.10 Calculate the nominal shear stress and cumulative horizontal displacement. For each nominal shear stress, prepare plots of (1) nominal shear stress versus cumulative horizontal displacement (fig. 11), (2) nominal shear stress versus cyclic horizontal displacement (fig. 12), and (3) vertical displacement versus cumulative horizontal displacement (fig. 13). For each test, prepare a plot of nominal residual shear stress versus normal stress (fig. 14). Residual shear stress is selected as the minimum nominal shear stress at zero displacement on any cycle.

15. Calculations

15.1 Equations for obtaining required calculations follow. They can be incorporated either into a computer program for automated analysis or can be applied manually.

15.1.1 Relative lateral displacement of the test specimen is:

$$\lambda_r = \frac{\lambda_c}{L} \times 100 \qquad (2)$$

where:

λ_r = relative lateral displacement, %
λ_c = cumulative horizontal displacement, in
L = length of specimen, in (or diameter if round specimens are used)
100 = convert decimal to percent

15.1.2 Residual shear stress is computed from the nominal residual shear stress recorded when the soil is in a residual strength state. Nominal residual shear stress, τ_r, acting on the specimen at zero displacement is:

$$\tau_r = \frac{F}{A} \qquad (3)$$

where:

τ_r = nominal residual shear stress, lbf/in^2
F = shear force, lbf
A = nominal area of the failure surface calculated from original specimen dimensions, in^2 (For example, 4 in^2 for 2- by 2-in specimens.)

15.1.3 Normal stress, σ, acting on the specimen is:

$$\sigma = \frac{W}{A} \qquad (4)$$

where:

σ = normal stress, lbf/in^2
W = vertical (normal) force acting on the specimen; lbf equal to $C_n M$ (assume lbm = lbf)
C_n = lever loading arm constant, or, for the pneumatic loading device, $C_n = 1.0$
m = hanger mass, lbm

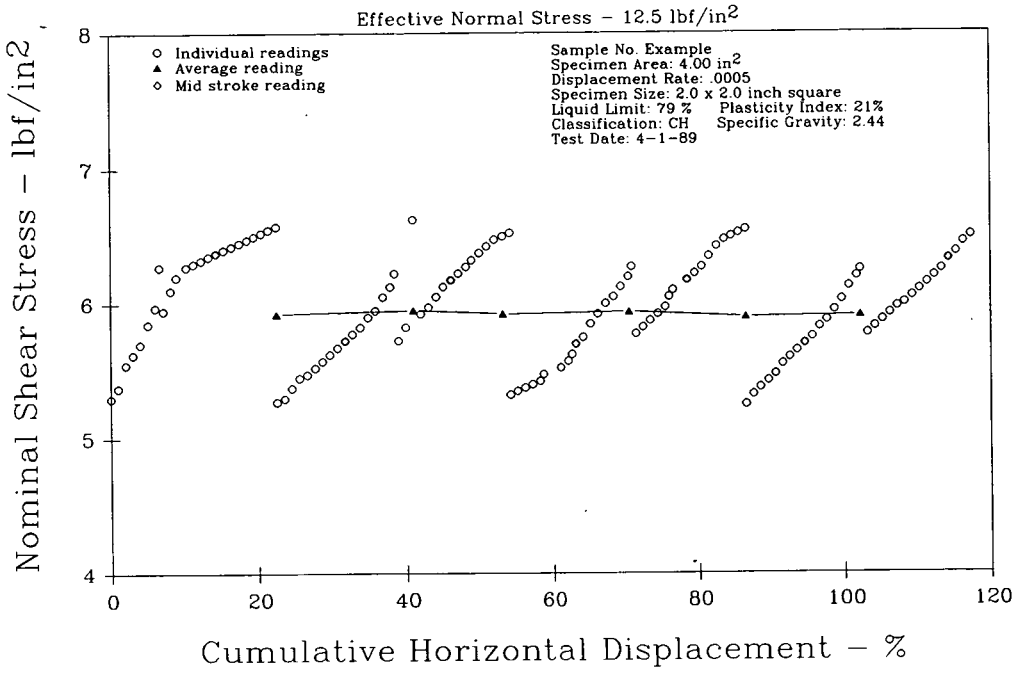

Figure 11. – Nominal shear stress versus cumulative horizontal displacement plot—example.

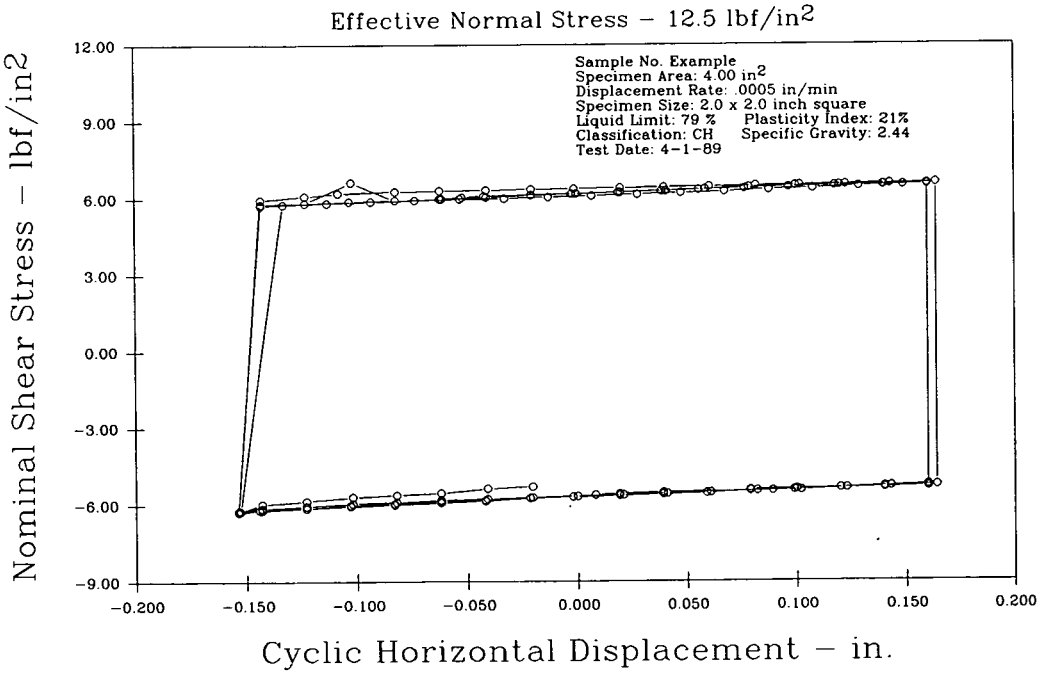

Figure 12. – Nominal shear stress versus cyclic horizontal displacement plot—example.

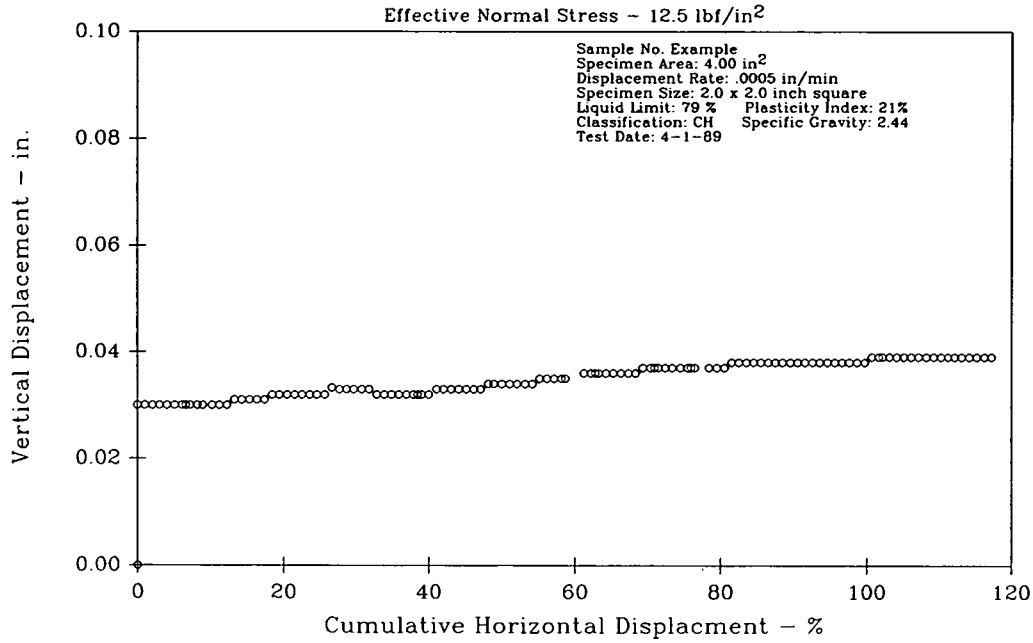

Figure 13. - Vertical displacement versus cumulative horizontal displacement plot—example.

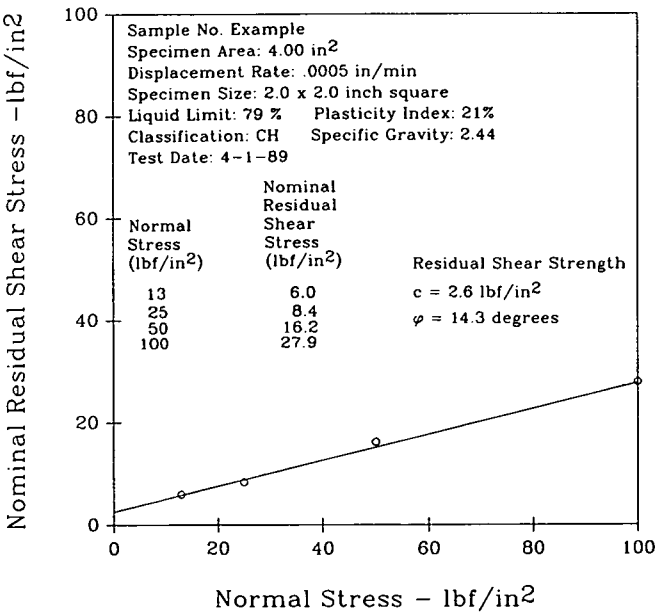

Figure 14. - Nominal residual shear stress versus normal stress plot—example.

15.1.4 Cumulative horizontal displacement is the sum of the absolute value of the difference (change) between two consecutive horizontal displacement readings expressed by:

$$\Sigma_d = \sum_{i=1}^{n} |\Delta_d| = \sum_{i=1}^{n} |d_i - d_{i-1}| \qquad (5)$$

where:

$\sum_{i=1}^{n}$ = summation of horizontal displacement readings

$|\ |$ = absolute value of the change between two consecutive horizontal displacement readings

Δ_d = difference in consecutive horizontal displacement readings

d_i = current horizontal dislacement reading

d_{i-1} = previous horizontal displacement reading

15.1.5 The residual angle of internal friction, ϕ_r, is determined from the slope of the best-fit straight line relating nominal residual shear stress to normal stress (fig. 14).

15.1.6 The residual cohesion intercept, c_r, is the nominal shear stress intercept of the line relating nominal residual shear stress to normal stress (fig. 14).

16. Report

16.1 The report is to consist of the completed and checked "Direct Shear Testing" data sheets (figs. 4 and 8), with data plots as shown on figures 9, and 11 through 14.

16.2 All data are to show a checkmark and all plotting must be checked.

17. Background References

Townsend, Frank C., and Paul A. Gilbert, *Engineering Properties of Clay Shales, Report 2: Residual Shear Strength and Classification Indexes of Clay Shales*, U.S. Army Corps of Engineers Waterways Experiment Station, Vicksburg, Mississippi, August 1974.

Annual Book of ASTM Standards, Part 19—Natural Building Stones; Soil and Rock, American Society for Testing and Materials, Philadelphia, Pennsylvania, 1982.

UNITED STATES DEPARTMENT OF THE INTERIOR
BUREAU OF RECLAMATION

USBR 5730-89

PROCEDURE FOR

PERFORMING ROTATIONAL SHEAR TESTING OF SOILS

INTRODUCTION

This procedure is under the jurisdiction of the Geotechnical Services Branch, code D-3760, Research and Laboratory Services Division, Denver Office, Denver, Colorado. The procedure is issued under the fixed designation USBR 5730. The number immediately following the designation indicates the year of acceptance or the year of last revision.

1. Scope

1.1 This designation outlines the procedure for determining the residual shear strength of clay and clay-shale using a rotational (torsional) shear apparatus.

1.2 Slurried specimens of soil which pass the No. 200 (75 mm) sieve should be used for this procedure.

1.3 Analyses of results from this test are made assuming that no significant pore pressures develop during application of shear stress. Therefore, it is essential that test specimens be sheared slowly enough to allow dissipation of excess pore pressure.

This procedure was written based on equipment used in the Geotechnical Services Branch Laboratory at the Denver Office. Although this procedure may be applicable for other devices, specific operating instructions, as furnished by the manufacturer, should be observed.

2. Auxiliary Tests

2.1 The test specimen used in this procedure is initially prepared as a slurry and is air-dried to a consistency such that the resulting soil, when placed in a liquid limit device, requires 30 to 35 drops of the liquid limit cup to close the groove for 1/2 inch (13 mm). Refer to USBR 5350 for guidelines on using the liquid limit device.

3. Applicable Documents

3.1 *USBR Procedures*:
USBR 1000 Standards for Linear Measurement Devices
USBR 1008 Calibrating Linear Variable Differential Transformers
USBR 1012 Calibrating Balances or Scales
USBR 1045 Calibrating Force Transducers (Load Cells)
USBR 3900 Standard Definitions of Terms and Symbols Relating to Soil Mechanics
USBR 5300 Determining Moisture Content of Soil and Rock by the Oven Method
USBR 5320 Determining Specific Gravity of Soils
USBR 5330 Performing Gradation Analysis of Fines and Sand Size Fraction of Soils, Including Hydrometer Analysis
USBR 5350 Determining the Liquid Limit of Soils by the One-Point Method
USBR 5360 Determining the Plastic Limit and Plasticity Index of Soils
USBR 5365 Determining Shrinkage Limit and Shrinkage Ratio of Soils
USBR 5700 Determining the One-Dimensional Consolidation Properties of Soil (Incremental Stress)

3.2 *ASTM Standards*:
D 422 Particle Size Analysis of Soils
D 4318 Liquid Limit, Plastic Limit, and Plasticity Index of Soils
E 11 Specification for Wire-Cloth Sieves for Testing Purposes

4. Summary of Method

4.1 A ring-shaped specimen of slurried clay or clay shale is consolidated at a given normal stress and is sheared by rotation. The force resisting rotation is measured. This force and the normal stress are used to determine the residual shear strength of soil. The vertical displacement is measured to monitor specimen volume change.

5. Significance and Use

5.1 Residual shear strength is a property of a clay that is used to evaluate the potential for progressive (gradual loss of strength) slope failure.

5.2 Residual shear strength represents the resistance to shear along a fully developed failure surface.

5.3 In some cases, the residual shear strength value rather than the laboratory peak strength value of a material is used for design of a structure.

6. Terminology

6.1 Definitions are in accordance with USBR 3900.

6.2 Terms not included in USBR 3900 specific to this designation are:

6.2.1 *Nominal Shear Stress*.–The shear stress computed using the cross-sectional area of the shear box.

6.2.2 *Residual Shear Stress*, τ_r.–The shear stress a material can sustain while undergoing continuous deformation at a constant normal stress.

6.2.3 *Residual Angle of Internal Friction*, ϕ_r.–The slope of the line relating nominal residual shear stress to normal stress, expressed in degrees.

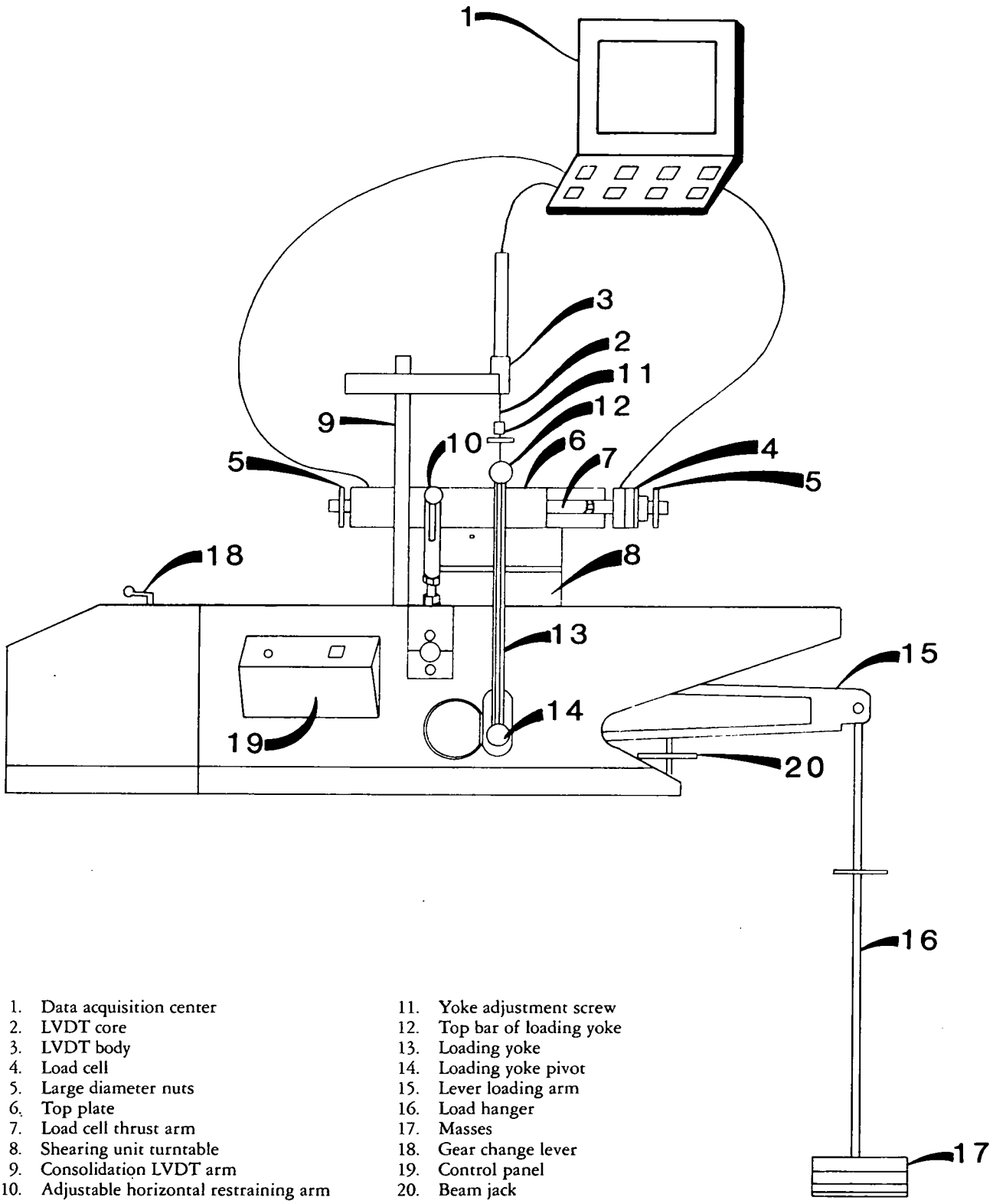

1. Data acquisition center
2. LVDT core
3. LVDT body
4. Load cell
5. Large diameter nuts
6. Top plate
7. Load cell thrust arm
8. Shearing unit turntable
9. Consolidation LVDT arm
10. Adjustable horizontal restraining arm
11. Yoke adjustment screw
12. Top bar of loading yoke
13. Loading yoke
14. Loading yoke pivot
15. Lever loading arm
16. Load hanger
17. Masses
18. Gear change lever
19. Control panel
20. Beam jack

Figure 1. – Rotational shearing unit.

6.2.4 *Residual Cohesion*, c_r.–The nominal shear stress intercept at zero normal stress of a line relating nominal residual shear stress to normal stress, expressed in lbf/in^2.

6.2.5 *Residual Strength State*.–The state of a soil when the shear stress has decreased to a constant value and is independent of displacement under a given normal stress.

6.2.6 *Couple*.–A pair of equal, parallel forces acting in opposite directions and tending to produce rotation.

6.2.7 *Couple Distance*.–The perpendicular distance between the forces of a couple.

6.2.8 *Seating Pressure*.–A pressure, usually about 1/2 to 2 lbf/in^2 (2 to 7 kPa), placed on a specimen to firmly seat all parts of the testing apparatus.

7. Apparatus

7.1 *General Apparatus*:

7.1.1 *Balance or Scale*.–Typical balances or scales used for this designation are:

Application	*Readable to*	*Approximate capacity*
Moisture content	0.1 g	1000 g
Initial dry unit weight	1 g	4000 g

7.1.2 *Stirring Apparatus*.–Electric mixing machine with a special dispersion cup conforming to the requirements of ASTM D 422.

7.1.3 *Liquid Limit Device*.–Casagrande type, with a groving tool conforming to the requirements of ASTM D 4318.

7.1.4 *Sieve*.–U.S.A. Standard series No. 200 (75 mm) sieve conforming to the requirements of ASTM E 11.

7.1.5 *Force Measuring Devices*.–Load cells, used to measure normal forces or couple forces, must be accurate to at least 0.25 percent of full scale.

7.1.6 *Automatic Data Acquisition and Reduction System*.–Any automatic data acquisition and/or reduction must be performed using a system (computer) capable of maintaining the accuracy of the measuring device(s).

7.1.7 *Time Measurement*.–Timing devices readable to 1 second are to be used to measured elapsed time.

7.1.8 *Miscellaneous Equipment*.–Equipment for remolding the specimens, including distilled water, spatula, grooving tools, knives, and straightedge.

7.2 *Equipment Unique to This Procedure*:

7.2.1 *Shearing Unit*.–The shearing unit (fig. 1) consists of a turntable (fig. 2, part 1), lower platen (fig. 2, part 2), inner confining disk (fig. 2, part 5), outer confining ring (fig. 2, part 4), upper platen (fig. 3, part 3), thrust bearing (fig. 3, part 6), moment transfer plate (fig. 3, part 4), and top plate (fig. 4, part 3).

7.2.1.1 The soil specimen is sheared by rotating the turntable which is attached to the lower platen. The upper platen and moment transfer plate are held fixed. The moment transfer plate contains a thrust bearing (fig. 3, part 6) which allows the wings of the moment transfer plate to activate two load cells (fig. 4, part 4). The load cells are clamped in place by carefully tightening large diameter nuts (fig. 4, part 5). The top plate is prevented from rotating by two adjustable horizontal restraining arms (fig. 5, part 4). The restraining arms have vertical bearings that allow the top plate to move vertically as the soil specimen consolidates.

7.2.1.2 The specimen is confined vertically by the rotating lower platen and the stationary upper platen. Each platen contains a porous disk which is in direct contact with the specimen.

7.2.1.3 The specimen is confined laterally by the inner confining disk (fig. 2, part 5) and the outer confining ring (fig 2, part 4). Both are made of Teflon to reduce friction.

7.2.1.3.1 The inner confining disk, forms the inner confining boundary for the specimen. Three sliding Teflon legs are fitted into the bottom of the disk. The height of the inner confining disk is adjusted by turning three screws which push the Teflon legs down. The outer confining ring forms the outer confining boundary for the specimen. It is attached to the turntable by three vertical pins which run from the turntable to holes in the bottom of the confining ring. The vertical pins go partially through the turntable and rest on beveled, horizontal support screws. The heights of the vertical pins are controlled by turning the horizontal support screws in or out (subpar. 10.2.2). When the inner confining disk and the outer confining ring are in position and extend the correct distance above the lower platen, the remolded specimen may be placed in the space between the inner confining disk and the outer confining ring. Once the specimen has been placed, the three screws in the inner confining disk are removed. Adhesion between the disk and the specimen holds the disk in place.

7.2.1.4 Porous disks made of sintered stainless steel, brass, or other metal that are not susceptible to corrosion from soil substances or moisture.

7.2.1.5 A Plexiglas collar fits over the turntable and is sealed by an O-ring forming a reservoir around the soil specimen. During a test, the reservoir is filled with distilled water to prevent the soil specimen from drying.

7.2.2 *Normal Loading Device*.–Normal stress is applied by a lever loading system capable of maintaining the normal stress to within ±1 percent of the specified normal stress throughout the test.

7.2.3 *Torque Application*.–Torque is applied to the turntable (and lower platen) through a series of gears (fig. 6). The testing apparatus must be capable of producing several different turntable rotation rates, which range from approximately 0.024 to 60 °/min (table 1).

Table 1. – Turntable rotation rate in degrees per minute.

Gear lever position	Drive gear/pickup gear ratio 60/30	54/36	45/45	36/54	30/60
	Degrees per minute				
A	60.0	45.0	30.0	20.0	15.0
B	12.0	9.00	6.00	4.00	3.00
C	2.40	1.80	1.20	0.800	0.600
D	0.480	0.360	0.240	0.160	0.120
E	0.096	0.072	0.048	0.032	0.024

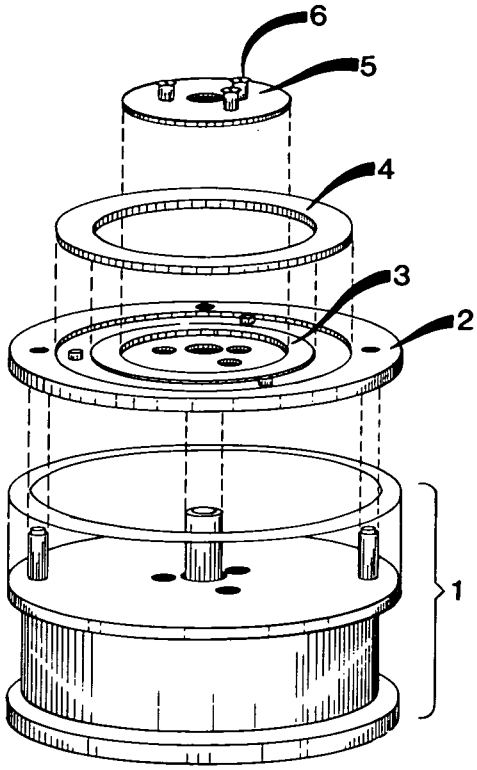

1. Shearing unit turntable with Plexiglas collar in place
2. Lower platen
3. Porous disk
4. Outer confining disk
5. Inner confining disk
6. Height adjustment screws

Figure 2. – Exploded view of shearing unit.

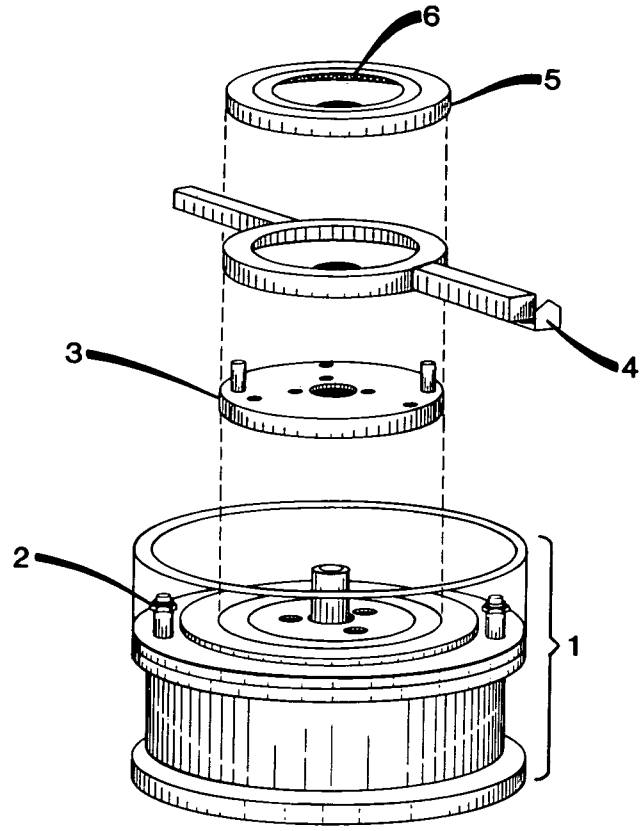

1. Shearing unit turntable
2. Clamp nuts for securing lower platen
3. Upper platen with porous disk
4. Moment transfer plate
5. Thrust plate
6. Thrust bearing

Figure 3. – Exploded view of moment transfer plate.

7.2.4 *Vertical Deformation Measurement.*–Changes in height of the specimen are determined using a dial gage or LVDT (linear variable differential transducer), accurate to 0.001 inch (0.025 mm).

8. Reagents and Materials

8.1 Distilled water is to be used whenever water is required in this procedure.

9. Precautions

9.1 *Technical precautions.*–Unless the porous disks are cleaned frequently they may become clogged by soil particles and impede water flow into or out the specimen.

10. Sampling, Test Specimens, and Test Units

10.1 *Specimen Preparation*:

10.1.1 Put about 500 mL of distilled water in a porcelain dish.

10.1.2 Mix 300 to 500 grams of soil into the distilled water, and let the soil-water mixture stand for a minimum of 24 hours.

10.1.3 Place the mixture of soil and water in the special dispersion cup of the stirring device (ASTM D 422).

10.1.4 Stir the mixture for 10 minutes. Attach a No. 200 (75 mm) sieve to a pan and pour the slurry through the sieve.

10.1.5 Air-dry the minus No. 200 sieve size material retained in the pan so that the resulting soil, when placed in the liquid limit device (USBR 5350), requires 30 to 35 drops of the liquid limit cup to close the groove cut by the grooving tool for a distance of 1/2 inch (13 mm).

10.2 *Specimen Placement*:

10.2.1 Measure and record to the nearest 0.001 inch the inner diameter of the outer confining ring and the outer diameter of the inner confining disk (fig. 7). These measurements are the outer and inner diameters of the specimen, respectively. Measure and record to the nearest 0.001 inch the couple distance (distance between the load cells). Determine and record the mass of the top plate to the nearest 0.1 lbm.

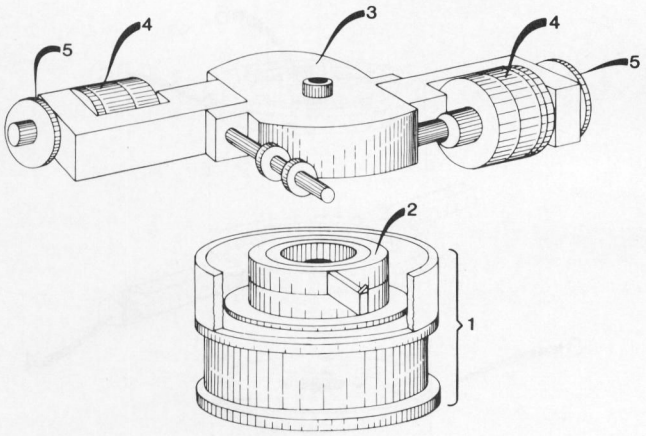

1. Shearing unit turntable
2. Moment transfer plate
3. Top plate
4. Load cell
5. Large diameter nut

Figure 4. – Top plate placement onto the shearing unit turntable.

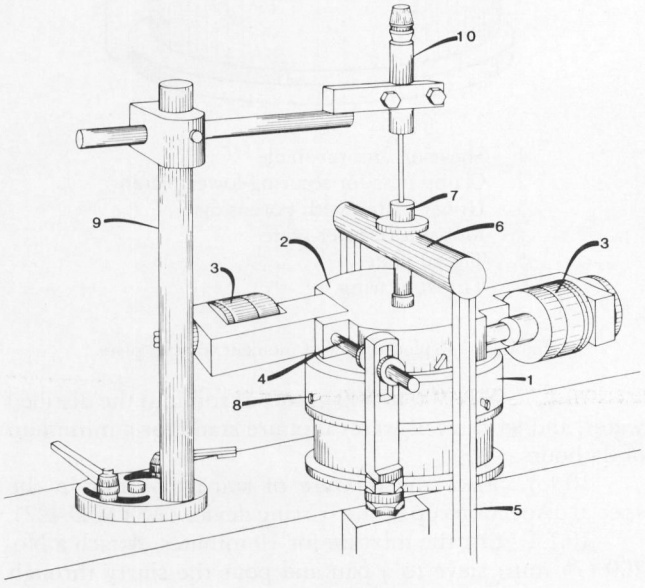

1. Shearing unit turntable
2. Top plate
3. Load cell
4. Adjustable horizontal restraining arm
5. Loading yoke
6. Top bar of loading yoke
7. Yoke adjustment screw
8. Horizontal support screw
9. Consolidation LVDT arm
10. LVDT

Figure 5. – Assembled shearing apparatus.

10.2.2 Adjust the height of the inner confining disk to 0.190 inch (4.83 mm) above the porous disk in the lower platen by turning the three horizontal screws so the three Teflon legs move in or out as required (fig. 8). This adjustment determines the specimen thickness.

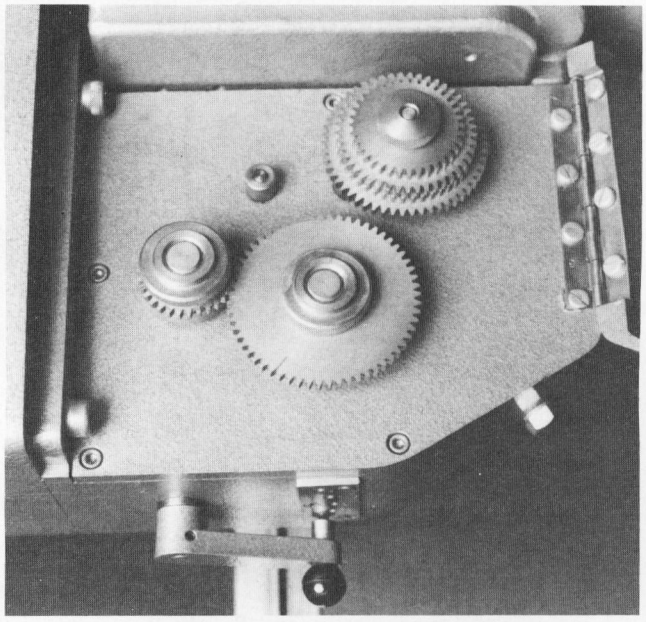

Figure 6. – The gears can be changed and the gear lever (top of picture) can be moved to produce several different rotation rates.

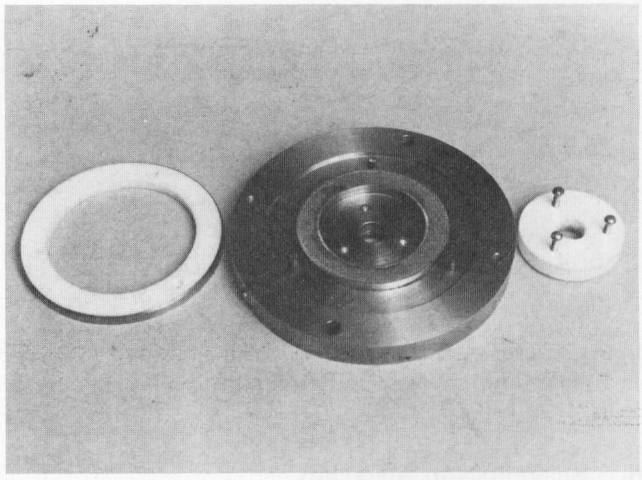

Figure 7. – The outer confining ring, lower platen, and inner confining disk from left to right.

10.2.3 Adjust the height of the outer confining ring (fig. 9) to 0.130 inch (3.30 mm) above the porous disk in the lower platen by moving the three beveled horizontal screws (the three support pins that support the outer confining ring rest on the horizontal beveled screws) in the turntable in or out as required.

10.2.4 Moisten the porous disk in the lower platen with distilled water.

10.2.5 Place the specimen (as prepared in subpar. 10.1) in the space between the inner confining disk and the outer confining ring (fig. 10). To place the specimen, it is best to use a flexible instrument, such as a spatula,

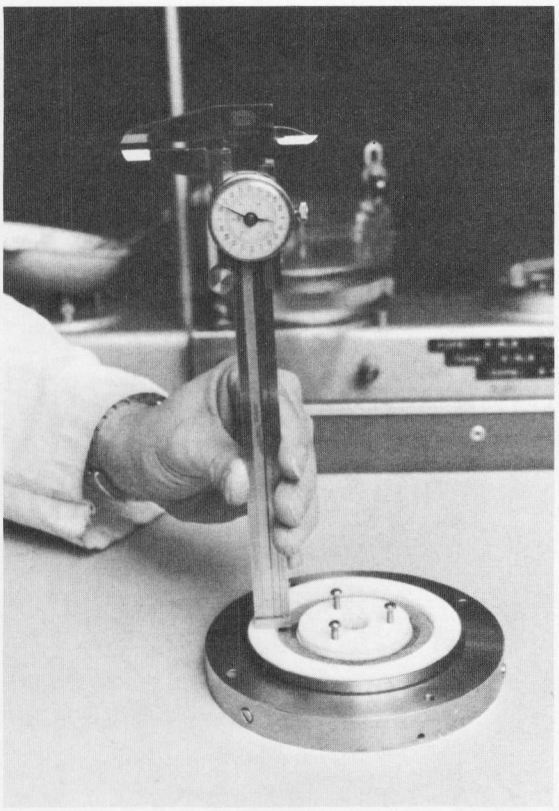

Figure 8. – Height of the inner confining disk is controlled by turning the three screws in it.

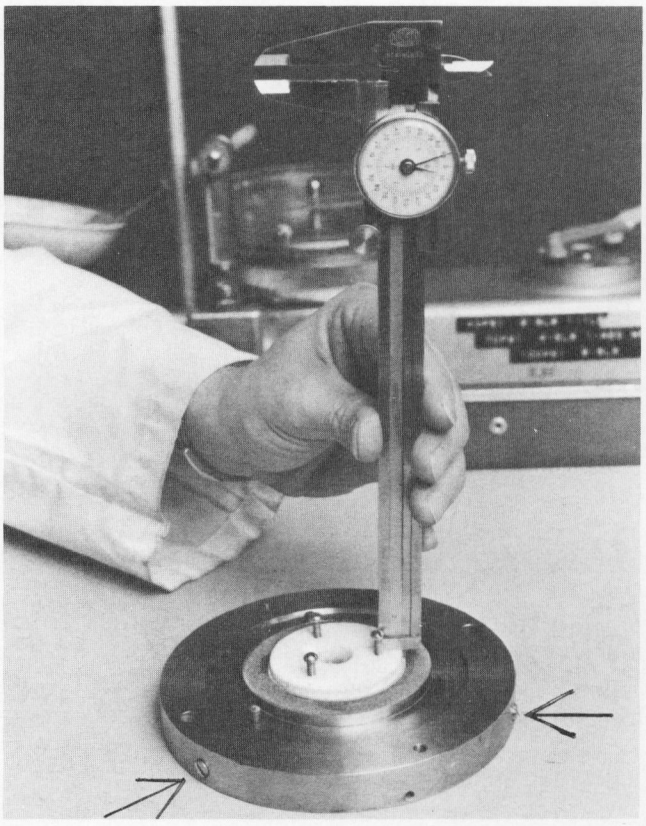

Figure 9. – The height of the outer confining ring is controlled by three screws in the lower platen. The heads of two (arrows) are visible in this view.

that will fit between the disk and ring. Special care must be taken to ensure that voids do not exist anywhere in the specimen.

10.2.6 Level the top surface of the specimen with a stiff straightedge (fig. 11) using the top of the outer confining ring as a guide.

10.2.7 Clean the surface of the outer confining ring (fig. 12).

10.2.8 Clean the top of the inner confining disk while being careful not to disturb the specimen.

10.2.9 Remove the three screws from the inner confining disk.

11. Calibration and Standardization

11.1 Verify that equipment is currently calibrated in accordance with the applicable calibration procedure. If the calibration is not current, perform the calibration before using the equipment for this procedure.

USBR 1000 Standards for Linear Measurement Devices
USBR 1008 Calibrating Linear Variable Differential Transformers
USBR 1012 Calibrating Balances or Scales
USBR 1040 Calibrating Pressure Gauges
USBR 1045 Calibrating Force Transducers (Load Cells)

11.2 Calibrate the normal loading device annually by loading a calibrated load cell placed in the shear box.

11.2.1 If a lever loading yoke is used, the vertical force recorded by the load cell is:

$$W = C_n m + m_p \quad (1)$$

where:

W = vertical force, lbf (assume 1 lbm = 1 lbf)
C_n = lever loading arm constant, usually 10.0*
m = hanger mass, lbm
m_p = top plate mass, lbm

* If C_n is not equal to 10.0, calculate a new constant by the relation $C_n = \frac{W - m_p}{m}$ after ensuring that the load cell is properly calibrated.

11.2.2 If a pneumatic loading device is used, W is the vertical force which corresponds to the reading on a calibrated pressure gauge (fig. 13).

11.2.2.1 If the force recorded by the load cell does not equal the force determined by the pressure gauge plus the top plate mass then either the load cell or the pressure gauge, or both, may need recalibration.

12. Preparation of Apparatus

12.1 Set the apparatus to the specified turntable rotation rate by using the appropriate gears and gear lever position (table 1).

12.2 Place the Plexiglas collar in position and push it down over the O-ring in the turntable.

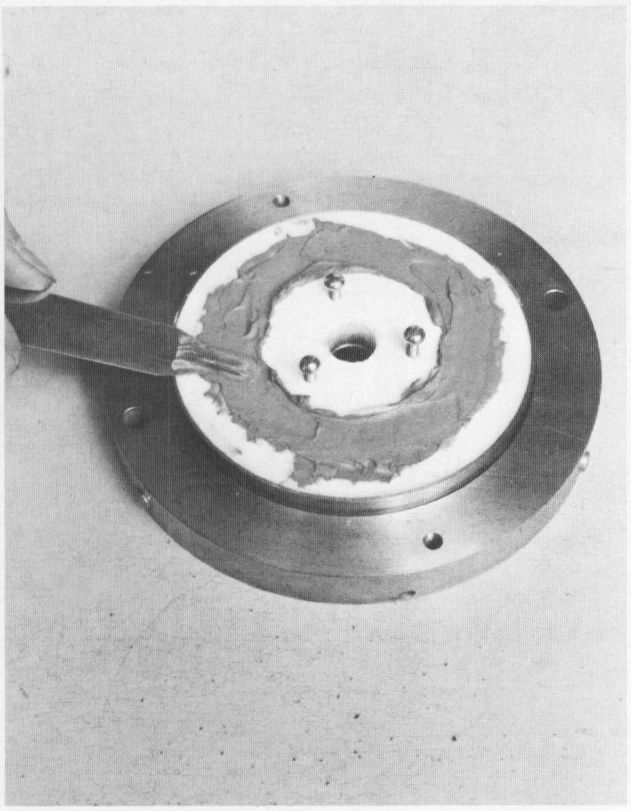

Figure 10. – Notched spatula used to place specimen.

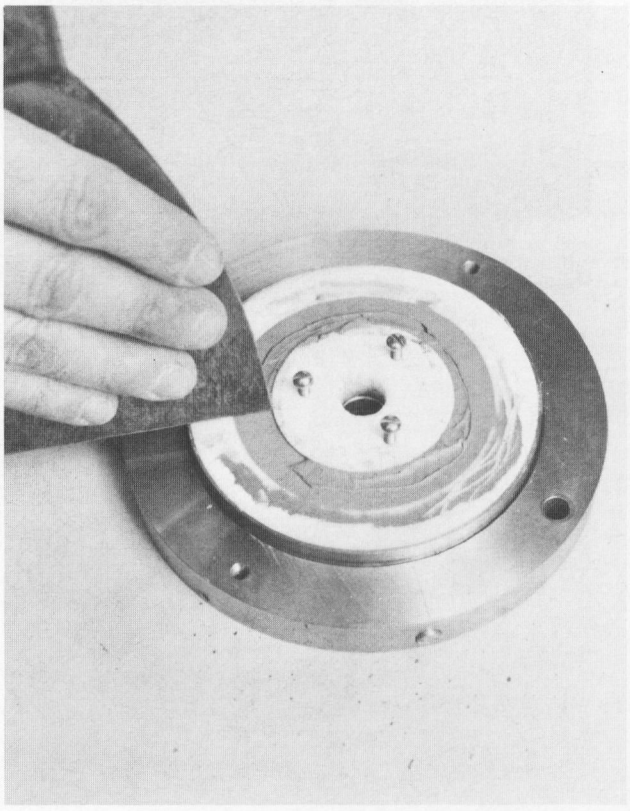

Figure 11. – A stiff straightedge (putty knife) may be used to level the surface of the specimen.

12.3 Place the lower platen containing the soil specimen over the lubricated centering pin. (A small amount of lightweight oil is sufficient for lubrication.) Fix the turntable in place by tightening the nuts on the clamp screws (fig. 14).

12.4 Moisten the porous disk contained in the upper platen with distilled water. Carefully place the upper platen (fig. 15) and the moment transfer plate (containing the thrust bearing) on the specimen (fig. 16). Place the thrust plate over the thrust bearings.

12.5 Align the wings of the moment transfer plate parallel to the horizontal restraining arms.

12.6 Slide the top plate into position over the wings of the moment transfer plate so that the top plate is seated on the thrust bearing of the moment transfer plate and the pointer on the moment transfer plate lines up with the line engraved in the top plate. Adjust the horizontal restraining arms to hold the top plate in position.

12.7 Swing the loading yoke (fig. 5, part 5) into position and ensure that the top bar (fig. 5, part 6) of the loading yoke is level. It can be leveled by adjusting the nuts at the base of the loading yoke.

12.8 Place a seating stress on the specimen by placing a 1-lbm plate on the load hanger unless a normal stress of less than 10 lbf/in^2 is required, then place a 0.1-lbm plate on the hanger.

12.9 Adjust the load cells in the top plate so that both are just touching the moment transfer plate wings.

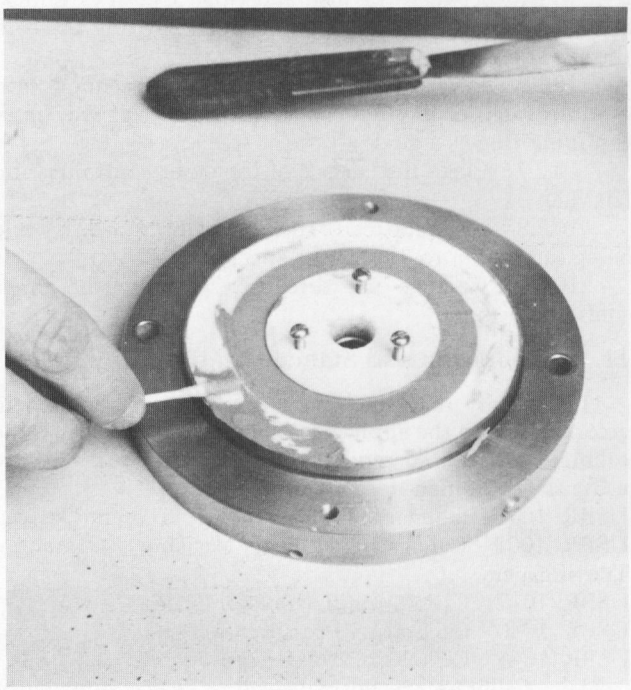

Figure 12. – The surface of the outer confining ring being cleaned with a moistened cotton swab.

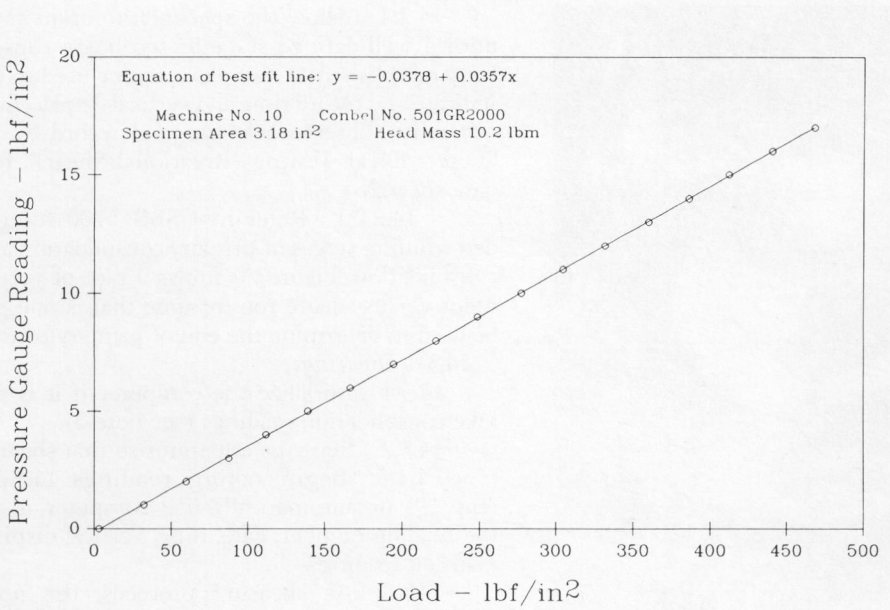

Hanger Mass + Head Mass - lbm/in2	Load - lbf/in2	Pressure Gauge Reading - lbf/in2
10.2	3.2	0
102.8	32.3	1
190.1	59.8	2
278.6	87.6	3
355.7	111.9	4
442.7	139.2	5
529.8	166.6	6
618.5	194.5	7
705.1	221.7	8
790.4	248.6	9
882.5	277.5	10
969.3	304.8	11
1055.2	331.8	12
1145.0	360.4	13
1228.3	386.3	14
1310.5	412.1	15
1400.5	440.5	16
1488.9	498.2	17

Figure 13. - Calibration of pneumatic loading device — example.

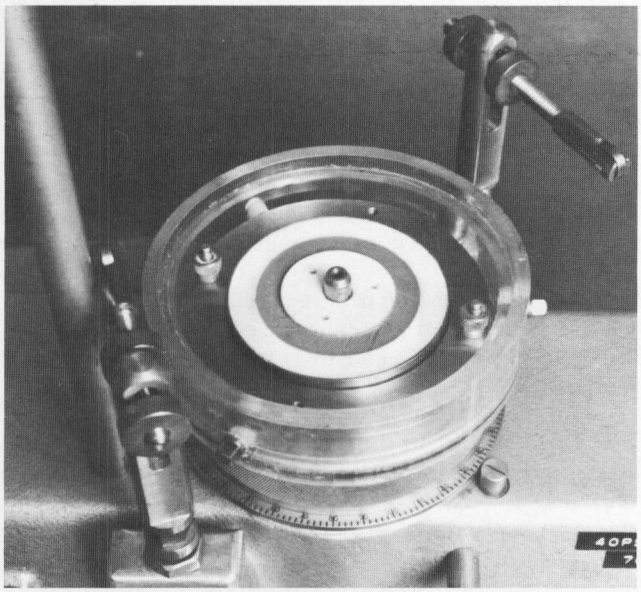

Figure 14. - Lower platen secured by clamp nuts (nuts to the left and right of the outer confining ring).

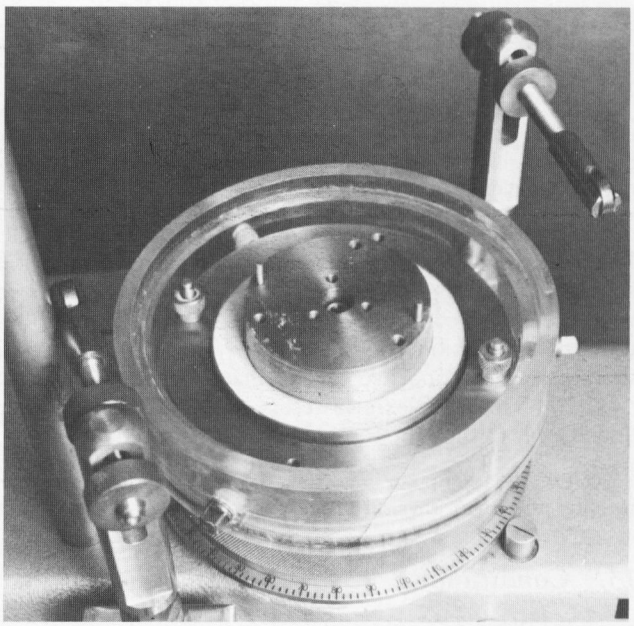

Figure 15. - Upper platen in place over the soil specimen.

12.10 Tighten the large diameter nuts on the load cell bolts, ensuring that load is not imposed on the load cells and that they are fixed in position.

12.10.1 If normal stresses are to be monitored, place a load cell in the recess in the top of the top plate.

12.11 Turn the yoke adjustment screw (fig. 5, part 7) until it is tight against the recessed nut (or load cell) in the top plate and the lever loading arm (fig. 1, part 15) is approximately level.

12.12 Ensure that the beam jack (fig. 1, part 20) is far enough away from the lever arm so that as the specimen consolidates, the lever arm will not come in contact with the beam jack.

12.13 Mount an LVDT or dial gauge so that it bears on the yoke adjustment screw (fig. 5, part 7) and adjust it so an initial reading is obtained.

NOTE 1.-If a computer is used to read LVDT values, execute the necessary keystrokes to display the LVDT values and position the LVDT body so that a zero reading is obtained.

12.14 Read and record the specimen height on the "Direct Shear Testing Specimen Information" form (fig. 17,

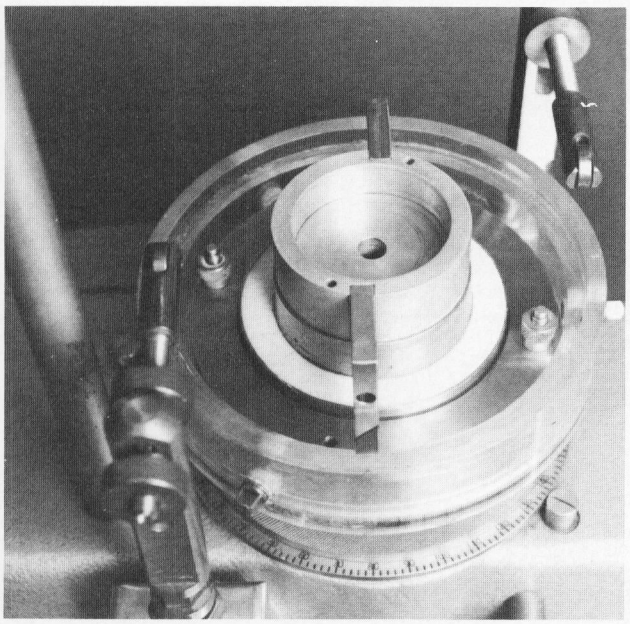

Figure 16. – Moment transfer plate parallel to horizontal restraining arms.

data sheet 1). This may be performed manually or with the computer.

NOTE 2.–If a computer is used, initialize it. This entails ensuring that the storage registers are empty. If they are not, old data should be purged. However, make sure a permanent copy of the old data is available before purging.

12.15 Remove the screws in the Plexiglas reservoir. Insert a screwdriver through a hole and turn a horizontal support screw (fig. 5, part 8) about one-fourth turn so that the outer confining ring (fig. 2, part 4) is in its uppermost position (fig. 18). Repeat the process for all the horizontal support screws. Replace the screws.

12.16 Fill the Plexiglas reservoir with distilled water and keep it full for the remainder of the procedure.

NOTE 3.–If a computer is used, execute the necessary keystrokes to enter specimen physical properties and other specimen data as required.

13. Conditioning

13.1 Prior to testing, the sample is to be stored to prevent contamination with (a) other matter, (b) loss of soil, (c) loss of moisture, or (d) loss of identification.

14. Procedure

14.1 All data are to be recorded on the "Direct Shear Testing (Rotational Shear)" form (fig. 19, data sheet 2b).

14.2 *Consolidation*:

14.2.1 Calculate, record, and place the required mass on the load hanger to apply the specified normal stress on the specimen. If a pneumatic loading device is used, increase the pressure to the appropriate gauge reading. Always start with the lowest stress and proceed to the highest.

14.2.2 Allow the specimen to drain and consolidate until a well-defined stage of secondary consolidation has been established. A computer can be used to automatically indicate and record time and vertical displacement readings; otherwise, observe readings and record by hand on the "Direct Shear Testing (Rotational Shear)" form (fig. 19, data sheet 2b).

14.2.2.1 Refer to USBR 5700 for guidelines on determining stages of primary consolidation and secondary consolidation. Figure 20 shows a plot of vertical displacement versus square root of time that is one plot that may be used to determine the end of primary consolidation.

14.3 *Shearing*:

14.3.1 Initialize the computer if it is to be used to take consolidation readings (see note 2).

14.3.2 Start the apparatus so that shearing begins.

14.3.3 Begin taking readings either manually (fig. 19) or automatically if a computer is used. Record the reading number, date, time, vertical displacement, and load cell readings.

14.3.4 As shearing proceeds, the nominal shear stress versus the average rotational displacement (%) relationship should be determined and plotted (fig. 21).

14.3.4.1 Compute and record on data sheet 2b the elapsed time, the average rotational displacement (%), the average force, the moment, and the nominal shear stress.

14.3.4.2 When the slope of the line defining nominal shear stress versus average rotational displacement (%) is fairly horizontal, sufficient displacement has occurred to form a fully developed failure surface; the soil is in the residual state.

14.3.5 After the soil is in the residual state, or as instructed by the responsible engineer, stop shearing the specimen.

14.3.6 Apply the next required normal stress.

14.3.7 Repeat the consolidation and shearing procedures (subpars. 14.2 and 14.3) for each required normal stress.

14.4 *Concluding the Test Program*:

14.4.1 Turn off the motor after the specified normal stresses have been applied and all readings have been recorded.

14.4.2 Remove the normal stress from the specimen.

14.4.3 Dismantle the shearing apparatus and—unless otherwise instructed—discard the soil specimen.

14.4.4 Thoroughly clean all surfaces that came into contact with the test specimen.

15. Calculations

15.1 Required calculations follow.

15.1.1 The normal stress, σ_n, acting on the ring shaped specimen is calculated.

$$\sigma_n = \frac{W}{\pi\ (r_2^2 - r_1^2)} \qquad (2)$$

where:

σ_n = normal stress, lbf/in^2

W = normal force, lbf (Add the mass of the hanger, the mass on the hanger, the mass of the top

7-2356 (8-86)
Bureau of Reclamation

DIRECT SHEAR TESTING - DATA SHEET 1
SPECIMEN INFORMATION

Designation USBR 5730-89

SAMPLE NO. Example PROJECT Example FEATURE Example

DRILL HOLE DH-143 LOCATION _____ DEPTH 3.8 – 5.8 ☒ ft ☐ m

TEST TYPE: ☐ DIRECT SHEAR ☐ REPEATED DIRECT SHEAR ☒ ROTATIONAL SHEAR

TESTED BY _____ DATE _____ COMPUTED BY _____ DATE _____ CHECKED BY _____ DATE _____

SPECIMEN DATA

SPECIMEN NO. Example SPECIMEN DIMENSIONS 2.794(O.D) 1.948(I.D.) ☒ in ☐ mm

SPECIMEN TYPE: ☐ COMPACTED ☐ UNDISTURBED ☒ SLURRIED

SLIDING SURFACE: ☐ INTACT ☐ PRECUT ☒ OTHER SLURRY

SOIL CLASSIFICATION SYMBOL CL
PERCENT GRAVEL 0
PERCENT SAND 0
PERCENT FINES 100

LIQUID LIMIT 36 (%)
PLASTICITY INDEX 16 (%)
SPECIFIC GRAVITY 2.67
SOIL CONSISTENCY (NO. OF BLOWS) 26

MOISTURE CONTENT DETERMINATION

	INITIAL (TRIMMINGS)		FINAL (SPEC.)	
CONTAINER NO.				
MASS OF CONTAINER AND WET SPECIMEN		g		g
MASS OF CONTAINER AND DRY SPECIMEN		g		g
MASS OF CONTAINER		g		g
MASS OF WATER		g		g
MASS OF DRY SPECIMEN		g		g
MOISTURE CONTENT		%		%

INITIAL DRY UNIT WEIGHT DETERMINATION

MASS OF SHEAR BOX + COVER PLATES		g	
MASS OF SHEAR BOX + COVER PLATES + WET SOIL		g	
MASS OF WET SOIL		g	
MASS OF DRY SOIL = (MASS OF WET SOIL)/(1 + INITIAL MOISTURE CONTENT/100)		g	
INSIDE AREA OF SHEAR BOX		☐ mm^2	☐ in^2
HEIGHT OF SPECIMEN		☐ mm	☐ in
VOLUME = (AREA x HEIGHT OF SPECIMEN)		☐ mm^3	☐ in^3
INITIAL DRY UNIT WEIGHT = (C* x MASS OF DRY SOIL/VOLUME)		☐ kN/m^3	☐ lbf/ft^3

*For SI metric application, C=.009807, which converts g/mm^3 to kN/m^3
For inch-pound application, C=3.810, which converts g/in^3 to lbf/ft^3.

REMARKS: SLURRY SPECIMAN TAKEN FROM DIRECT SHEAR TRIMMINGS.

Figure 17. - Direct shear testing — data sheet 1 — specimen information — example.

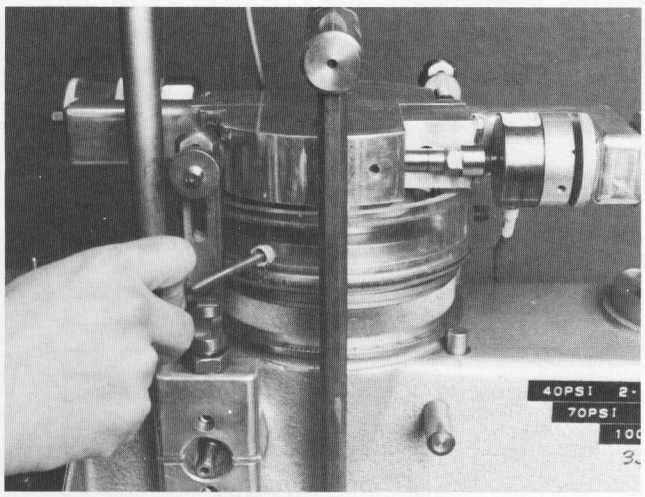

Figure 18. – Turning the horizontal support screws to center the outer confining ring on the specimen.

plate and convert the total to force by changing lbm to lbf, assume 1 lbm = 1 lbf.)

r_2 = outside radius of specimen, in
r_1 = inside radius of specimen, in
π = 3.14
$\pi\ (r_2^2 - r_1^2)$ = area of specimen, in^2

15.1.2 The residual shear stress, τ_r, acting on the ring-shaped specimen when the soil is in the residual state is calculated.

$$\tau_r = \frac{3\ M}{2\pi\ (r_2^3 - r_1^3)} \qquad (3)$$

where:

τ_r = residual shear stress, lbf/in^2
M = moment acting on the specimen
$M = \frac{d(f_1 + f_2)}{2}$, in-lbf
d = couple distance, in
f_1, f_2 = forces of a couple, lbf

15.1.3 The residual angle of internal friction, ϕ_r, is determined from the slope of the best-fit line relating residual shear stress to normal stress. It can also be determined for specific values of residual shear stress and normal stress.

$$\phi_r = \tan^{-1}\left(\frac{\tau_r}{\sigma_n}\right) \qquad (4)$$

where:

ϕ_r = residual angle of internal friction, degree
τ_r = residual shear stress, lbf/in^2
σ_n = normal stress, lbf/in^2
$\tan^{-1}$ = arc tangent

15.1.4 The residual cohesion, c_r (lbf/in^2), is the shear stress intercept of the best-fit line relating residual shear stress to normal stress (figs. 22 and 23).

15.1.5 Average rotational displacement, A_d, in percent of specimen circumference is calculated from the angular displacement rate.

$$A_d = \frac{A_{dr}\ t\ F\ \left(\frac{r_1 + r_2}{2}\right)}{\pi\ \left(\frac{d_1 + d_2}{2}\right)}\ (100) \qquad (5)$$

where:

A_d = average rotational displacement, %
A_{dr} = angular displacement rate, °/s
t = elapsed time, s
F = factor to convert from degrees to radians, equals $(\pi/180)°$
$\frac{r_1 + r_2}{2}$ = average radius of soil specimen, in
$\pi\frac{(d_1 + d_2)}{2}$ = average circumference of soil specimen, in
100 = convert from decimal to percent

16. Report

16.1 Typical results are shown on figures 17, and 19 through 23.

16.2 The report is to include the following:

- Machine number and top plate mass of apparatus (fig. 19).
- Identification and description of the sample (fig. 17).
- Initial height and area of the specimen (fig. 19).
- Normal stress on the specimen (fig. 19).
- Perpendicular couple distance (fig. 19).
- Soil consistency, expressed as number of blows (fig. 19).
- All basic test data including displacements, normal and shear loads, and specimen thickness changes (fig. 17 and 19).
- Vertical displacement verus square root of time (fig. 20).
- Plot of nominal shear stress versus average rotational displacement (%) (fig. 21).
- Plot of residual shear stress versus normal stress, and the corresponding residual angle of internal friction and residual cohesion (figs. 22 and 23).

16.3 Any abnormalities, such as loss of material, "gritty" soil texture, etc., are to be documented (fig 17).

16.4 Any departures from the procedure shall be documented (fig. 17 or an attached sheet).

16.5 All data are to show a checkmark and all plotting must be checked.

NOTE 4.–Information concerning the computer program and instructions for its use are available from the Denver Office Soil and Rock Testing Section, Code D-3761.

17. Background References

La Gatta, D. P., *Residual Strength of Clay and Clay-Shales by Rotation Shear Tests*, Contract Report S-70-5, U.S. Army Corps of Engineers Waterways Experiment Station, Vicksburg, Mississippi, June 1970.

Townsend, Frank C., and Paul A. Gilbert, *Engineering Properties of Clay Shales, Report 2: Residual Shear Strength and Classification Indexes of Clay Shales*, U.S. Army Corps of Engineers Waterways Experiment Station, Vicksburg, Mississippi, August 1974.

7-2357A (10-86)
Bureau of Reclamation

DIRECT SHEAR TESTING - DATA SHEET 2b
ROTATIONAL SHEAR

Designation USBR 5730-89

SAMPLE NO. Example SPECIMEN NO. Example MACHINE NO. 1 NOMINAL NORMAL STRESS 25.0 ☒ lbf/in² ☐ kPa TOP PLATE MASS 9.3 ☒ lbm ☐ kg SOIL CONSISTENCY (No. of blows) 26

INITIAL SPECIMEN HEIGHT 0.130 ☒ in ☐ mm SPECIMEN DIMENSION (O.D.) 2.794 ☒ in ☐ cm (I.D.) 1.948 ☒ in ☐ cm SPECIMEN AREA 3.151 ☒ in² ☐ cm²

LOAD CELL FACTOR 1 lbf/V LVDT FACTOR 1 ☒ in/V ☐ mm/V COUPLE DISTANCE 4.327 ☒ in ☐ mm ROTATIONAL RATE 0.00028 deg/min

TESTED BY _____ DATE _____ COMPUTED BY _____ DATE _____ CHECKED BY _____ DATE _____

READING NO.	DATE	TIME			ELAPSED TIME	AVERAGE ROTATION DISPLACEMENT	VERTICAL DISPLACEMENT		NORMAL FORCE		SHEAR FORCE					MOMENT	NOMINAL SHEAR STRESS
							READING	DISPLACEMENT	READING	FORCE	READING 1	FORCE 1	READING 2	FORCE 2	AVERAGE FORCE		
		hr	min	s	min	%	V	☒ in ☐ mm	V	☒ lbf ☐ N	V	☒ lbf ☐ N	V	☒ lbf ☐ N	☒ lbf ☐ N	☒ in-lbf ☐ mm-N	☒ lbf/in² ☐ kPa*
1	8/31	11	40	27	0	0.00	0.0126	0.0126	78.8	78.8	13.2	13.2	13.4	13.4	13.3	57.55	15.25
2	8/31	14	41	10	180.7	0.01	0.0128	0.0128	78.8	78.8	12.5	12.5	14.0	14.0	13.3	57.33	15.19
3	8/31	17	41	10	360.7	0.03	0.0124	0.0124	78.8	78.8	12.0	12.0	13.9	13.9	13.0	56.03	14.84
4	8/31	20	41	10	540.7	0.04	0.0118	0.0118	78.8	78.8	11.9	11.9	14.1	14.1	13.0	56.25	14.90
5	8/31	23	41	10	720.7	0.06	0.0114	0.0114	78.8	78.8	11.7	11.7	13.9	13.9	12.8	55.39	14.67
6	9/1	02	42	10	901.7	0.07	0.0112	0.0112	78.8	78.8	11.7	11.7	13.3	13.3	12.5	54.09	14.33
7	9/1	05	42	11	1081.7	0.08	0.0111	0.0111	78.8	78.8	11.2	11.2	13.7	13.7	12.5	53.87	14.27
8	9/1	08	42	41	1262.2	0.10	0.0113	0.0113	78.8	78.8	11.8	11.8	13.5	13.5	12.7	54.74	14.50
9	9/1	11	42	41	1442.2	0.11	0.0114	0.0114	78.8	78.8	12.0	12.0	13.4	13.4	12.7	54.95	14.56
10	9/1	14	42	41	1622.2	0.13	0.0119	0.0119	78.8	78.8	12.2	12.2	13.4	13.4	12.8	55.39	14.67
11	9/1	17	42	41	1802.2	0.14	0.0122	0.0122	78.8	78.8	12.2	12.2	13.2	13.2	12.7	54.97	14.56
12	9/1	20	42	41	1982.2	0.15	0.0129	0.0129	78.8	78.8	12.2	12.2	13.1	13.1	12.7	54.74	14.50
13	9/1	23	42	41	2162.2	0.17	0.0130	0.0130	78.8	78.8	12.2	12.2	13.3	13.3	12.8	55.17	14.61
14	9/2	02	43	11	2342.7	0.18	0.0135	0.0135	78.8	78.8	12.5	12.5	13.2	13.2	12.9	55.60	14.73
15	9/2	05	43	11	2522.7	0.20	0.0166	0.0166	78.8	78.8	13.2	13.2	13.2	13.2	13.2	57.12	15.13
16	9/2	08	43	11	2702.7	0.21	0.0170	0.0170	78.8	78.8	13.2	13.2	13.1	13.1	13.2	56.90	15.07
17	9/2	11	43	42	2883.3	0.22	0.0186	0.0186	78.8	78.8	13.3	13.3	13.0	13.0	13.2	56.90	15.07
18	9/2	14	43	42	3063.3	0.24	0.0190	0.0190	78.8	78.8	13.4	13.4	12.9	12.9	13.2	56.90	15.07
19	9/2	17	43	42	3243.3	0.25	0.0198	0.0198	78.8	78.8	13.7	13.7	10.9	10.9	12.3	53.22	14.10
20	9/2	20	43	42	3423.3	0.27	0.0196	0.0196	78.8	78.8	12.9	12.9	11.5	11.5	12.2	52.79	13.98

* Multiply shear stress by 10^6 to convert N/mm² to kPa

REMARKS: CONSOLIDATION DATA NOT SHOWN

GPO 682 - 117

Figure 19. - Direct shear testing — data sheet 2b — rotational shear — example.

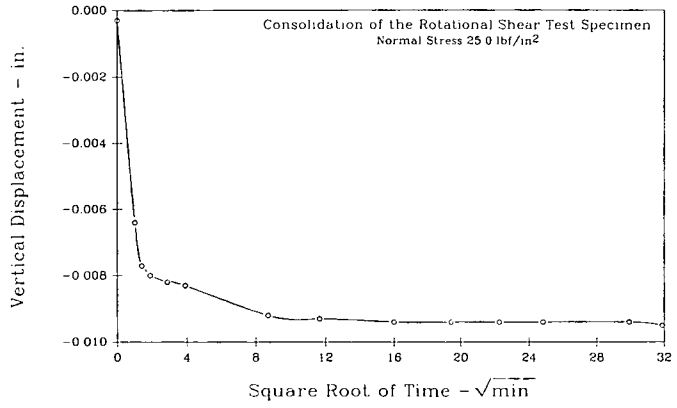

Figure 20. - Vertical displacement versus square root of time plot (normal stress = 25 lbf/in²) — example.

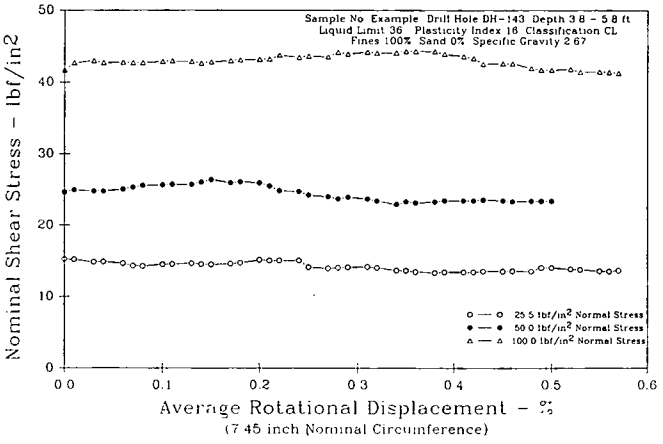

Figure 21. - Nominal shear stress versus average rotational displacement (%) plot — example.

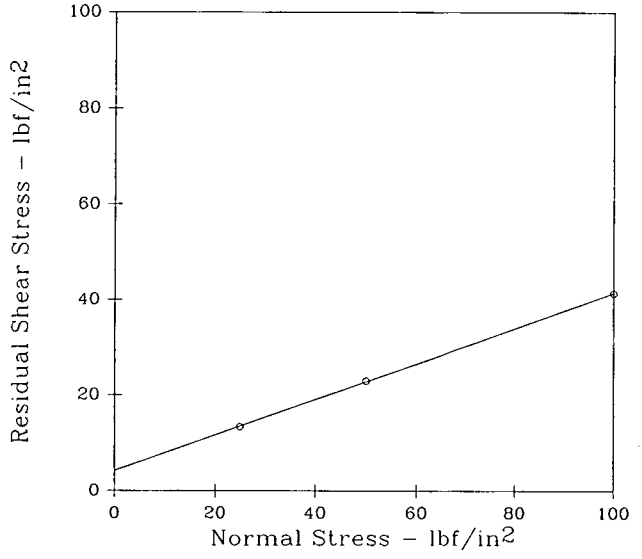

Sample No. Example
Drill Hole No. Example
Liquid Limit 36 Plasticity Index 16
Fines 100 % Sand 0 %
Classification CL Specific Gravity 2.67
Specimen Height 0.125 in
Outside Diameter 2.794 in
Inside Diameter 1.948
Rotation 0.096 deg/min
Rotation Rate 0.00028 in/min
Test Date: 8-31-89

Normal Stress (lbf/in²)	Residual Shear Stress (lbf/in²)
25	13.4
50	22.9
100	41.3

Residual Shear Strength
Cohesion (c) = 4.2 lbf/in²
Angle of Internal Friction (φ_r) = 20.4 °

Figure 22. - Residual shear stress (average) versus normal stress plot (Feature: torsional shear) — example

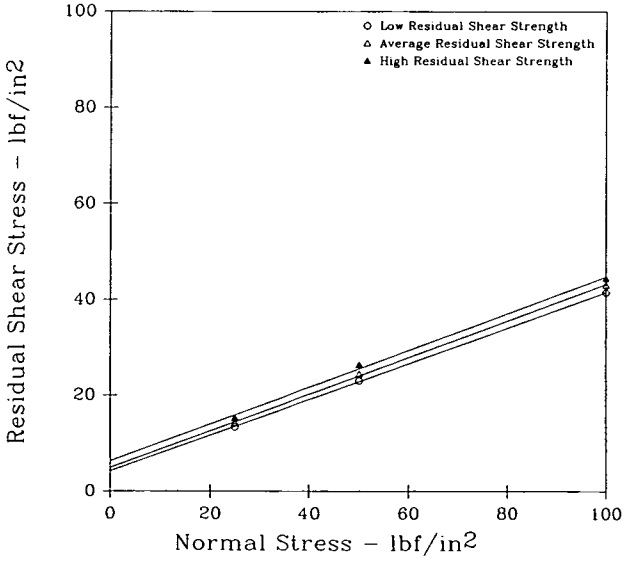

Sample No. Example
Drill Hole No. Example
Liquid Limit 36 Plasticity Index 16
Fines 100 % Sand 0 %
Classification CL Specific Gravity 2.67
Specimen Height 0.125 in
Outside Diameter 2.794 in
Inside Diameter 1.948
Rotation 0.096 deg/min
Rotation Rate 0.00028 in/min
Test Date: 8-31-89

Normal Stress (lbf/in²)	Low Residual Shear Stress (lbf/in²)	Average Residual Shear Stress (lbf/in²)	High Residual Shear Stress (lbf/in²)
25	13.4	14.2	15.3
50	22.9	24.4	26.4
100	41.3	42.9	44.3

Residual Shear Strength

	Low	Average	High
Cohesion (c) -lbf/in²	4.2	4.9	6.3
Angle of Internal Friction (φ_r) - degrees	20.4	20.9	21.0

Figure 23. - Residual shear stress (average, low, high) versus normal stress plot (Feature: torsional shear) — example.

UNITED STATES DEPARTMENT OF THE INTERIOR
BUREAU OF RECLAMATION

USBR 5735-89

PROCEDURE FOR

DETERMINING INITIAL CAPILLARY PRESSURE OF SOILS

INTRODUCTION

This procedure is under the jurisdiction of the Geotechnical Services Branch, code D-3760, Research and Laboratory Services Division, Denver Office, Denver, Colorado. The procedure is issued under the fixed designation USBR 5735. The number immediately following the designation indicates the year of acceptance or the year of last revision.

1. Scope

1.1 This designation outlines the procedure for determining initial capillary pressure of soil by the exposed end plate method. Unconfined, partially saturated specimens of fine-grained soil are used. The procedure is varied for soils having capillary pressures (negative pore pressures) greater than five atmospheres (-507 kPa). The procedure is nondestructive and is intended to be performed on specimens prepared for further testing by other methods such as triaxial shear or one-dimensional consolidation. The data obtained can be used to supplement results from these other tests.

2. Auxiliary Tests

2.1 A soil sample may have to be prepared in accordance with USBR 5205 before performing this procedure. The specimen must be prepared in accordance with either USBR 5210 or 5215, whichever is appropriate, as a part of performing this procedure.

3. Applicable Documents

3.1 *USBR Procedures*:
USBR 1050 Calibrating Pressure Transducers
USBR 5205 Preparing Soil Samples by Splitting or Quartering
USBR 5210 Preparing Compacted Soil Specimens for Laboratory Use
USBR 5215 Preparing Soil Specimens for Laboratory Use From Undisturbed Samples

4. Summary of Method

4.1 A soil specimen is prepared and placed on a saturated ceramic end plate inside a chamber. The exposed end plate pressure is zero (atmospheric) at the beginning of the test and, as required, the chamber pressure is increased in increments of 5 lbf/in² (34 kPa) to maintain zero (atmospheric) pressure on the end plate. Immediately following placement of the specimen, the capillary pressure (negative pore pressure) in the soil acts on the water in the ceramic end plate. The specimen is allowed to act on the water in the ceramic end plate until the end plate measuring system indicates a value of minus 5 lbf/in² (-34 kPa). Then the applied chamber pressure is increased by 5 lbf/in², reducing the end plate pressure once again to zero. The negative pore pressure in the soil is again allowed to act on the water in the ceramic end plate until the measuring system reaches a value of minus 5 lbf/in². The chamber pressure is again increased 5 lbf/in² to offset the negative pore pressure of the soil. This sequence is repeated until the maximum negative pore pressure of the soil has been reached. Since the specimen used in this test is not compressed, the capillary pressure measured is referred to as the "initial capillary pressure."

5. Significance and Use

5.1 Since about 1937, the Bureau of Reclamation has measured pore pressure in partially saturated, sealed (undrained) specimens. The pore pressure theory utilizing Boyle's and Henry's laws in relation to volume change was described by Hamilton [1].[1] The early developments and the effective stress concept in Bureau shear testing up to 1960 were described by Gibbs, Hilf, Holtz, and Walker [2]. Pore pressure was difficult to measure in partially saturated soils, and the principles used until that time involved primarily the evaluation of pore-air pressure. The important developments were the theoretical relationship using volume change (and Boyle's and Henry's laws), and the application of this relationship as a guide for controlling the rate of testing such that measured pore-air pressure values would approximately follow computed theoretical values until failure of the soil specimen was approached.

Research was performed to improve the accuracy of these measurements as there were many conditions which produced erratic results. Futhermore, the pore-water pressure and the suction effects of capillary films in unsaturated cohesive soil were considered, as they played an important role in the cohesive strength of soil. Hilf [3] showed the theoretical relationship between pore-air, pore-water, and capillary pressures in unsaturated cohesive soils, and descriptions of capillary measurement techniques were reported by Gibbs and Coffey [4].

Results of this research are the basis for this procedure which outlines a method for measuring the capillary

[1] Number in brackets refers to the reference.

pressure (soil suction or initial negative pore pressure), particularly when values are in excess of 1 atmosphere (100 kPa) negative.

6. Terminology

6.1 According to the pore pressure theory incorporated in this procedure, the pressure of the pore water, u_w, is the sum of the pore-air pressure, u_a, and the capillary pressure, u_c. If the pore air is at atmospheric pressure, it is considered for the purpose of this procedure to be at zero, and the capillary pressure is then the same as the pore water pressure. Since the specimen used in this test is not compressed, the capillary pressure measured is called the *initial capillary pressure* or initial negative pore pressure. This is in contrast to capillary pressures measured in enclosed specimens where soil volume changes occur as specimens are compressed.

7. Apparatus

7.1 *Equipment Unique to This Procedure* (see figs. 1 and 2).

7.1.1 *Pressure Chamber.*–A chamber designed to withstand pressure from an air source rated at a maximum pressure of 300 lbf/in^2 (2070 kPa). A pan for water surrounds the baseplate of the chamber.

7.1.2 *End Plate.*–An end plate containing a ceramic stone which has a bubbling pressure greater than the capillary pressure of the soil being tested. The bubbling pressure is the pressure required to force air through the saturated stone and is sometimes called the *air-entry value* by ceramic stone manufacturers. The diameter of the ceramic stone should be at least 1/4 inch (6 mm) larger than the diameter of the soil specimen.

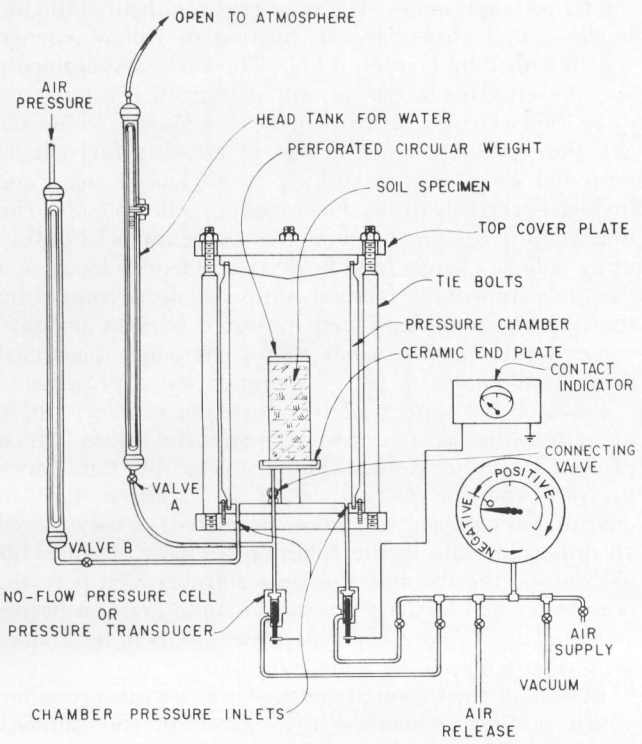

Figure 1. – Test chamber for measuring negative pore pressure by the exposed end plate method.

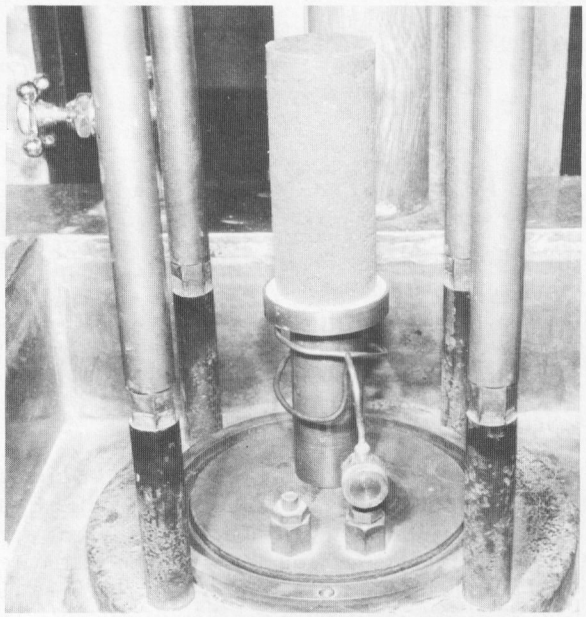

Figure 2. – Soil specimen on exposed ceramic end plate.

7.1.3 *Pressuring Measuring System.*–Air and water pressures are measured by pressure transducers connected to a multichannel electrical pressure recorder. Transducers rated for a working pressure of 300 lbf/in^2 (2070 kPa) and having accuracy and linearity to within ±1 percent of full scale are required. If electronic devices are not available, appropriate pressure gauges may be used.

7.1.4 *Head Tank.*–A tank for water to provide a means of keeping the voids in the ceramic stone of the end plate and the connecting tubing to the pressure-measuring device completely filled.

7.1.5 *Tubing and Valves.*–It is important that volume change between valve A on the head tank (fig. 1) and the end plate connection, including the branch to the pressure-measuring device, be as small as possible. Therefore, valve A should be selected to have the smallest possible volume change from open to closed positions; the tubing should have a wall thickness sufficient to hold total volume change to a maximum of 0.015 in^3 (0.25 mL) for a 300-lbf/in^2 (2070-kPa) chamber pressure.

8. Reagents and Materials

8.1 De-aired water that is free of acids, alkalies, or oils and is suitable for drinking is to be used whenever water is required.

9. Precautions

9.1 *Safety Precautions.*–Safety glasses should be worn near high pressure air and water lines.

9.2 *Technical Precautions*:

9.2.1 The test area should be protected from large temperature variations for the duration of the test.

9.2.2 The bubbling pressure of the ceramic stone should be greater than the anticipated capillary pressure of the soil being tested.

10. Sampling, Test Specimens, and Test Units

10.1 This test is nondestructive and is intended to be performed on soil specimens that will be used for further testing by other procedures.

10.2 *Sample Preparation.*–Prepare a represenative soil sample in accordance with USBR 5205, if appropriate.

10.3 *Specimen Preparation.*–Prepare an undisturbed specimen in accordance with USBR 5215 or a compacted specimen in accordance with USBR 5210, whichever is appropriate.

11. Calibration and Standardization

11.1 Verify that pressure transducers used are currently calibrated in accordance with USBR 1050. If the calibration is not current, perform the calibration before using the pressure transducers for this procedure.

12. Conditioning

12.1 The test specimen should be placed—and the test performed—as quickly as possible to avoid moisture loss of the test specimen that is to be used for further testing by other procedures.

13. Procedure

13.1 Ensure that valve A to the head tank is closed and fill the tank with freshly boiled de-aired water. Open valve A and flush the lines to the end plate to remove the air bubbles entrapped in the system.

13.2 Apply a vacuum to the head tank and to the connecting valve to ensure complete de-airing.

13.3 Check the water lines and air lines to ensure that there are no leaks.

13.4 Saturate the end plate by submerging it in boiling water for a minimum of 30 minutes with the connecting valve in the end plate tubing open.

13.5 Cool the saturated end plate to room temperature by placing the container of boiling water in a cold water bath.

13.6 Close the connecting valve while the end plate is still submerged.

13.7 Open valve A and allow a small amount of water to flow from the pressure transducer outlet.

13.8 Connect the connecting valve to the pressure transducer outlet, and place the ceramic end plate on the chamber base.

13.9 Turn the connecting valve to the open position making sure that water is covering the valve.

13.10 During installation, keep the ceramic stone wet with free water standing on its surface to prevent development of menisci in the pores of the stone.

13.11 To check the system for saturation and sensitivity to negative pore pressure measurement, wipe the ceramic stone with a towel to remove any free water.

13.12 Read the value of the negative pore pressure on the pressure transducer connected to the ceramic stone.

CAUTION.–Do not allow negative pore pressures to exceed minus 8.0 lbf/in² (–55 kPa, about two-thirds of the prevailing atmospheric pressure); cavitation in the measuring system will occur at a negative pore pressure of about 1 atmosphere (14.7 lbf/in², 100 kPa).

13.13 Release the negative pore pressure developed in the ceramic stone by opening valve A to the head tank.

13.14 With valve A open, read the pressure on the pressure transducer connected to the ceramic stone. If the stone is functioning properly (i.e., saturated) the transducer reading should be equal to the pressure of the water in the head tank.

13.15 Zero the pressure transducers or other pressure measuring devices according to the manufacturer's instructions.

13.16 Place a wet sponge over the chamber pressure inlet. This will maintain a high humidity inside the chamber and protect the specimen from drying during the test.

13.17 Until the test begins and the chamber pressure applied, occasionally open the head tank valve to maintain saturation of the end plate.

13.18 Remove any free water that may accumulate on the end plate with a moist towel or cloth before placing the soil specimen on the center of the end plate.

13.19 Firmly place the soil specimen, without any covering membrane, in the center of the end plate (fig. 2). Record the time of specimen placement.

NOTE 1.–During this installation, keep the pressure in the end plate near zero by occasionally opening and quickly closing valve A. This condition must be maintained until the pressure chamber has been sealed by placement of the top cover plate.

13.20 Based on operator experience, estimate the maximum negative pore pressure that may be produced by the soil to be tested.

13.21 If it is estimated that the specimen to be tested will have a negative pore pressure greater than 5 atmospheres (73.5 lbf/in², 507 kPa) follow subparagraph 13.25; otherwise, proceed with subparagraph 13.22.

13.22 Carefully place the pressure chamber cylinder into its O-ring groove; place the top cover plate on the pressure chamber cylinder and securely fasten the top cover plate with the tie bolts.

13.23 Perform a final saturation of the end plate by opening and quickly closing valve A to the head tank.

13.24 *Procedure for Soils With Negative Pore Pressures* [Pressures Less Than 5 Atmospheres (73.5 lbf/in², 507 kPa, see fig. 3)]:

13.24.1 Apply 5-lbf/in² (34-kPa) air pressure to the chamber by appropriately adjusting the air pressure and opening valve B.

13.24.2 As the negative pore pressure reading reaches minus 5.0 lbf/in² (–34 kPa) increase the chamber pressure as described in subparagraph 13.24.3.

EL-589 (11-85) Bureau of Reclamation	INITIAL NEGATIVE PORE PRESSURE DATA SHEET	Designation USBR 5735 - 89
SAMPLE NO. 22L-1	SHEET 1 OF 2	
FEATURE Example	PROJECT Example	
SPECIMEN NO. 3	MOISTURE CONTENT 24.9	INITIAL DRY UNIT WEIGHT 90.2 lbf/ft³
TESTED BY DATE	CHECKED BY DATE	

DATE	ACTUAL TIME	END PLATE PRESSURE [X] lbf/in² [ ] kPa	CHAMBER PRESSURE [X] lbf/in² [ ] kPa	NEGATIVE PORE PRESSURE (4) - (3) [X] lbf/in² [ ] kPa	ACCUMULATED TIME (HOURS)
(1)	(2)	(3)	(4)	(5)	(6)
		0=0	0=-0.5		
8/19	7:30	0.0	-0.5	0.0	0.00
	7:40	-5.0	-0.5	+5.0	0.17
Applied 5 lbf/in² to chamber, reduced end plate pressure to 0 lbf/in²					
	7:41	0.0	+4.5	+5.0	0.18
	7:55	-5.0	+4.5	+10.0	0.42
Applied 10 lbf/in² to chamber, reduced end plate pressure to 0 lbf/in²					
	7:57	-0.2	+9.5	+10.2	0.45
	8:13	-5.0	+9.5	+15.0	0.72
Applied 15 lbf/in² to chamber, reduced end plate pressure to 0 lbf/in²					
	8:15	-0.1	+14.5	+15.1	0.75
	8:35	-5.0	+14.5	+20.0	1.08
Applied 20 lbf/in² to chamber, reduced end plate pressure to 0 lbf/in²					
NOTE: Applied pressures between 20 and 50 lbf/in² not shown					
Applied 50 lbf/in² to chamber, reduced end plate pressure to 0 lbf/in²					
	1:46	+0.1	+49.5	+49.9	6.27
	2:00	-1.0	+49.5	+51.0	6.50
	2:30	-3.3	+49.5	+53.3	7.00
	3:00	-4.6	+49.5	+54.6	7.50
	3:15	-5.0	+49.5	+55.0	7.75

GPO 849-228

Figure 3. – Initial negative pore pressure data sheet. Data tabulated from a pore pressure test having an initial capillary pressure less than 5 atmospheres negative (sheet 1 of 2).

EL-589 (11-85) Bureau of Reclamation

INITIAL NEGATIVE PORE PRESSURE DATA SHEET

Designation USBR 5735 - 89

SAMPLE NO. 22L-1	SHEET 2 OF 2
FEATURE Example	PROJECT Example
SPECIMEN NO. 3	MOISTURE CONTENT 24.9
INITIAL DRY UNIT WEIGHT 90.2 lbf/ft³	
TESTED BY	DATE
CHECKED BY	DATE

DATE (1)	ACTUAL TIME (2)	END PLATE PRESSURE [X] lbf/in² [ ] kPa (3)	CHAMBER PRESSURE [X] lbf/in² [ ] kPa (4)	NEGATIVE PORE PRESSURE (4) - (3) [X] lbf/in² [ ] kPa (5)	ACCUMULATED TIME (HOURS) (6)
Applied 55 lbf/in² to chamber, reduced end plate pressure to 0 lbf/in²					
	3:16	+0.1	+54.5	+54.9	7.77
	4:00	-2.1	+54.5	+57.1	8.50
	6:00	-2.1	+54.5	+57.1	10.50
	9:30	-1.9	+54.6	+57.0	14.00
8/20	7:30	+3.0	+54.6	+52.1	24.00
-Completion of test-					

GPO 849-228

Figure 3. – Initial negative pore pressure data sheet. Data tabulated from a pore pressure test having an initial capillary pressure less than 5 atmospheres negative (sheet 2 of 2).

13.24.3 Add 5.0 lbf/in² (34 kPa) air pressure to the chamber, reducing the negative pore pressure to 0. Record the pressure values and actual time as shown on figure 3.

13.24.4 Repeat the procedure of subparagraphs 13.24.2 and 13.24.3 until the calculated value of negative pore pressure of the soil specimen decreases (see figs. 3, 4, and 5) which indicates that the maximum negative pore pressure of the soil specimen has been achieved.

CAUTION.–Do not decrease the chamber pressure at any time during the test because this may cause air to come out of solution in the measuring system.

13.24.5 At the end of the test, open head tank valve A to ensure saturation of the ceramic end plate.

13.24.6 Open pressure chamber valve B and reduce the chamber pressure to zero.

13.24.7 Disassemble the pressure chamber and remove the soil specimen from the ceramic end plate.

13.24.8 Obtain and record the wet mass of the soil specimen and carefully store the specimen in a moisture-proof container for further testing.

13.24.9 Remove the ceramic end plate by disconnecting from the baseplate; immediately close head tank valve A.

13.24.10 Compute the negative pore pressures and prepare a plot of negative pore pressure versus time as shown on figure 4a.

13.25 *Procedure for Soils With Negative Pore Pressures* [Pressures Greater Than 5 Atmospheres (73.5 lbf/in², 507 kPa, see fig. 5)]:

13.25.1 For soils having estimated negative pore pressures greater than 5 atmospheres, it is necessary to vary the procedure so that the test may be completed in an 8-hour work day.

13.25.2 Adjust the height of the water in the head tank to the same height as the surface of the ceramic end plate.

13.25.3 With the specimen in place, open valve A to the head tank and install the pressure chamber cylinder and top cover plate.

13.25.4 Securely fasten the top cover plate with the tie bolts.

13.25.5 Apply 10-lbf/in² (69-kPa) air pressure to the chamber with valve A to the head tank open.

NOTE 2.–The 10-lbf/in² (69-kPa) chamber pressure will be supported by menisci formed across the surface of the saturated ceramic end plate. The end plate measuring system then will be at atmospheric pressure which is considered zero for this test.

13.25.6 Close valve A to the head tank and the negative pressure of the soil will quickly act on the ceramic end plate reducing the pressure in the end plate pressure measuring system to a negative value.

13.25.7 Open valve A to the head tank and apply an additional increment of 10-lbf/in² (69-kPa) air pressure to the chamber.

13.25.8 Close valve A to the head tank and record the pressure in the ceramic end plate. Repeat this procedure until the reaction time of the soil on the closed end plate system shows a marked decrease as shown on figure 4b. Record the data as shown on figure 5.

13.25.9 Complete the test using the procedure outlined in subparagraphs 13.24.1 through 13.24.10.

14. Calculations

14.1 Calculate the negative pore pressure.

$$(5) = (4) - (3)$$

where:

(5) = negative pore pressure, lbf/in²
(4) = chamber pressure, lbf/in²
(3) = end plate pressure, lbf/in²

15. Report

15.1 The report is to consist of the completed and checked "Initial Negative Pore Pressure Data Sheet" forms (figs. 3 and 5) with a plot as shown on figure 4.

15.2 All calculations are to show a checkmark and all plotting must be checked.

16. References

[1] Hamilton, L. W., "The Effect of Internal Hydrostatic Pressure on the Shearing Strength of Soils," *Proceedings*, Am. Soc. for Test. Mat'l., vol. 39, pp. 1100-1122, 1939.

[2] Gibbs, H. J., J. W. Hilf, W. G. Holtz, and F. C. Walker, "Shear Strength of Cohesive Soils," *Research Conference on Shear Strength of Cohesive Soils*, Am. Soc. of Civil Engineers, Boulder, Colorado, pp. 33-162, June 1960.

[3] Hilf, J. W., "An Investigation of Pore-Water Pressure in Compacted Cohesive Soils" (Doctoral Thesis, University of Colorado), Bureau of Reclamation Technical Memorandum No. 654, Denver, Colorado, October 1956.

[4] Gibbs, H. J., and C. T. Coffey, "Techniques for Pore Pressure Measurements and Shear Testing of Soils," *Proceedings of the Seventh International Conference on Soil Mechanics and Foundation Engineering*, pp. 151-157, Mexico City, Mexico, 1969.

16.1 *Background References*

Coffey, C. T. and H. J. Gibbs, *Measurement of Initial Negative Pore Pressure of Unsaturated Soil*, Progress Report on Shear and Pore Pressure Research, Bureau of Reclamation Report No. EM-665, Denver, Colorado, February 1963.

Coffey, C. T. and H. J. Gibbs, *Application of Pore Pressure Measurements to Shear Strength of Cohesive Soils*, Bureau of Reclamation Report No. EM-761, Denver, Colorado, June 1959.

Knodel, P. C. and C. T. Coffey, *Measurement of Negative Pore Pressure of Unsaturated Soil Shear and Pore Pressure Research*, Bureau of Reclamation Report No. EM-738, Denver, Colorado, October 1966.

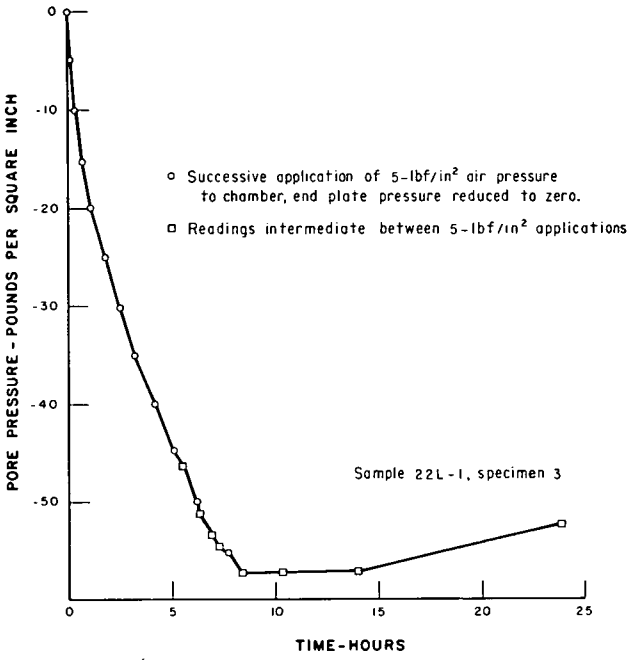

a) Initial capillary pressure less than 5 atmospheres negative.

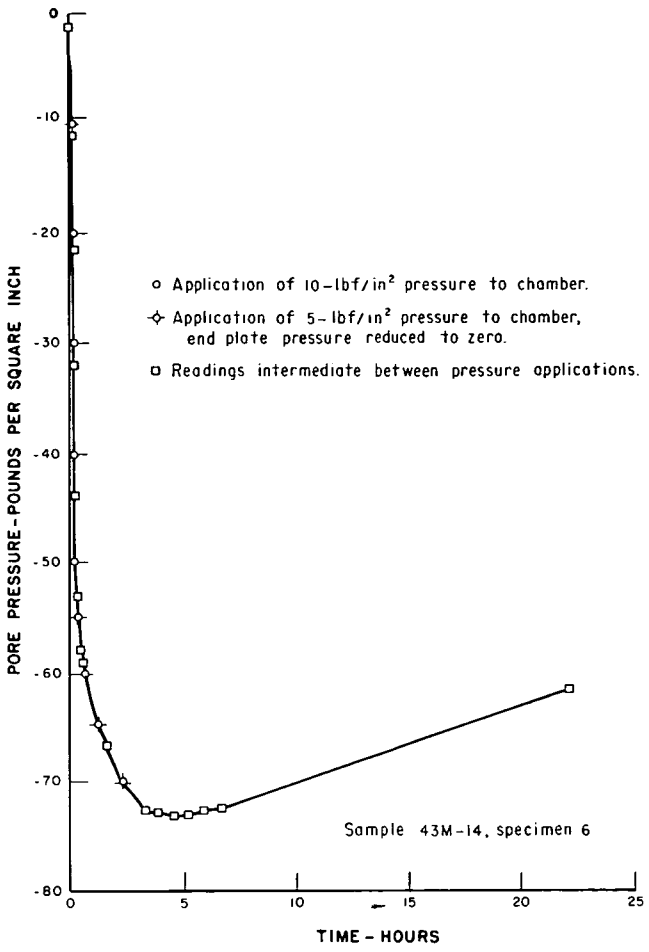

b) Initial capillary pressure greater than 5 atmospheres negative.

Figure 4. – Pore pressure versus time plot.

EL-589 (11-85) Bureau of Reclamation	INITIAL NEGATIVE PORE PRESSURE DATA SHEET	Designation USBR 5735 - 89
SAMPLE NO. 43M-14	SHEET 1 OF 2	
FEATURE Example	PROJECT Example	
SPECIMEN NO. 6	MOISTURE CONTENT 16.2	INITIAL DRY UNIT WEIGHT 105.1 lbf/ft³
TESTED BY	DATE	CHECKED BY DATE

DATE	ACTUAL TIME	END PLATE PRESSURE ☒ lbf/in² ☐ kPa	CHAMBER PRESSURE ☒ lbf/in² ☐ kPa	NEGATIVE PORE PRESSURE (4) - (3) ☒ lbf/in² ☐ kPa	ACCUMULATED TIME (HOURS)
(1)	(2)	(3)	(4)	(5)	(6)
		0 =0	0=-0.5		
8/24	9:10	0.0	-0.5	0.0	0.00
	9:11	-1.5	-0.5	+1.5	0.02
	Applied 10 lbf/in² to chamber				
	9:12	0.0	+9.5	+10.0	0.03
	9:12	-1.0	+9.5	+11.0	0.03
	Applied 20 lbf/in² to chamber				
	9:13	0.0	+19.5	+20.0	0.05
	9:16	-1.5	+19.5	+21.5	0.10
	Applied 30 lbf/in² to chamber				
	9:19	0.0	+29.5	+30.0	0.15
	9:20	-2.0	+29.5	+32.0	0.17
	Applied 40 lbf/in² to chamber				
	9:21	0.0	+39.5	+40.0	0.18
	9:25	-4.0	+39.5	+44.0	0.25
	Applied 50 lbf/in² to chamber				
	9:26	0.0	+49.5	+50.0	0.27
	9:29	-3.0	+49.5	+53.0	0.32
	Applied 55 lbf/in² to chamber				
NOTE: Applied pressures between 55 and 70 lbf/in² not shown					

GPO 849-228

Figure 5. – Initial negative pore pressure data sheet. Data tabulated from a pore pressure test having an initial capillary pressure greater than 5 atmospheres negative (sheet 1 of 2).

EL-589 (11-85) Bureau of Reclamation	INITIAL NEGATIVE PORE PRESSURE DATA SHEET				Designation USBR 5735 - 89
SAMPLE NO. 43M-14			SHEET 2 OF 2		
FEATURE Example			PROJECT Example		
SPECIMEN NO. 6	MOISTURE CONTENT 16.2		INITIAL DRY UNIT WEIGHT 105.1 lbf/ft³		
TESTED BY	DATE		CHECKED BY	DATE	

DATE	ACTUAL TIME	END PLATE PRESSURE ☒ lbf/in² ☐ kPa	CHAMBER PRESSURE ☒ lbf/in² ☐ kPa	NEGATIVE PORE PRESSURE (4) - (3) ☒ lbf/in² ☐ kPa	ACCUMULATED TIME (HOURS)
(1)	(2)	(3)	(4)	(5)	(6)
	Applied 70 lbf/in² to chamber, reduced end plate pressure to 0 lbf/in²				
	11:32	0.0	+69.5	+70.0	2.42
	12:25	-2.3	+69.5	+72.3	3.25
	12:40	-2.5	+69.5	+72.5	3.50
	1:10	-2.6	+69.5	+72.6	4.00
	1:50	-2.9	+69.5	+72.6	4.67
	2:25	-2.9	+69.5	+72.9	5.25
	3:10	-2.5	+69.5	+72.5	6.00
	4:00	-2.3	+69.5	+72.3	6.83
8/25	7:15	+8.6	+69.5	+61.4	22.08
-Completion	of test-				

GPO 849-228

Figure 5. – Initial negative pore pressure data sheet. Data tabulated from a pore pressure test having an initial capillary pressure greater than 5 atmospheres negative (sheet 2 of 2).

UNITED STATES DEPARTMENT OF THE INTERIOR
BUREAU OF RECLAMATION

USBR 5740-89

PROCEDURE FOR

DETERMINING LATERAL EARTH PRESSURE (K_O) BY THE TRIAXIAL TEST METHOD

INTRODUCTION

This procedure is under the jurisdiction of the Geotechnical Services Branch, code D-3760, Research and Laboratory Services Division, Denver Office, Denver, Colorado. The procedure is issued under the fixed designation USBR 5740. The number immediately following the designation indicates the year of acceptance or the year of last revision.

1. Scope

1.1 This designation outlines the procedure for determining K_o (the coefficient of earth pressure at rest) for soil by the triaxial compression test method. The value of K_o can be determined by performing the test on partially saturated specimens tested in unconsolidated-undrained (UU) compression USBR 5745, or consolidated-undrained (CU) compression USBR 5750, or on partially or completely saturated specimens tested in consolidated-drained (CD) compression USBR 5755. Pore pressure measurements are made during undrained compression so that effective stress can be evaluated (see app. X3). The range of change in effective stress in the specimen is limited to the range of stress which causes a volume change equal to the initial free-air volume in the specimen.

1.2 The K_o test is performed using strain-controlled axial loading and manually adjusted lateral pressure. The magnitude of lateral pressure is adjusted to maintain specimen lateral strain equal to zero. The rate of axial strain is dependent on the type of soil being tested and on drainage conditions under which the soil is tested.

1.3 The K_o test has been performed successfully on many types of soil, ranging from fine-grained soil to coarse-grained soil, containing up to 3-inch (75-mm) maximum particle size. Specimen sizes for the various types of soil have ranged from 1-3/8-inch diameter by 3-inches high to 9-inches diameter by 22-1/2-inches high (35- by 75- to 230- by 570-mm).

2. Auxiliary Tests

2.1 A compacted or undisturbed soil specimen must be prepared in accordance with USBR 5210 or 5215 prior to performing this procedure. A moisture content and unit weight determination must be obtained in accordance with USBR 5300 and 5370, respectively, to obtain placement conditions for the test specimen. Physical properties tests are to be performed in accordance with USBR 5320, 5330, 5350, 5360, 5365 after completion of the test.

2.2 Specimen preparation and equipment assembly are performed in exactly the same manner as described in triaxial shear procedures USBR 5745, 5750, or 5755.

3. Applicable Documents

3.1 *USBR Procedures*:

USBR 1008 Calibrating Linear Variable Differential Transformers
USBR 1012 Calibrating Balances or Scales
USBR 1040 Calibrating Pressure Gauges
USBR 1045 Calibrating Force Transducers (Load Cells)
USBR 1050 Calibrating Pressure Transducers
USBR 1055 Calibrating Differential Pressure Transducers
USBR 1450 Calibrating Triaxial-Type Chambers for Pressure-Volume Change Relations
USBR 1455 Calibrating Volume and Drain Tubes
USBR 3900 Standard Definitions of Terms and Symbols Relating to Soil Mechanics
USBR 5210 Preparing Compacted Soil Specimens for Laboratory Use
USBR 5215 Preparing Soil Specimens for Laboratory Use from Undisturbed Samples
USBR 5300 Determining Moisture Content of Soil and Rock by the Oven Method
USBR 5320 Determining Specific Gravity of Soils
USBR 5330 Performing Gradation Analysis of Fines and Sand Size Fraction of Soils, Including Hydrometer Analysis
USBR 5350 Determining the Liquid Limit of Soils by the One-Point Method
USBR 5360 Determining the Plastic Limit and Plasticity Index of Soils
USBR 5365 Determining Shrinkage Limit and Shrinkage Ratio of Soils
USBR 5370 Determining Unit Weight of Cylindrical Soil Specimens
USBR 5735 Determining Initial Capillary Pressure of Soils
USBR 5745 Performing Unconsolidated-Undrained Triaxial Shear Testing of Soils
USBR 7000 Performing Disturbed Soil Sampling in Test Pits, Trenches, Accessible Borings, and Tunnels.
USBR 7010 Performing Disturbed Soil Sampling Using Auger Boring Method
USBR 7100 Obtaining Undisturbed Block Samples by the Hand and Chain Saw Methods

USBR 7105 Performing Undisturbed Soil Sampling by Mechanical Drilling Methods

3.2 *ASTM Standard*:

D 2850 Test Method for Unconsolidated, Undrained Compressive Strength of Cohesive Soils in Triaxial Compression

4. Summary of Method

4.1 A soil specimen is prepared and placed in a standard triaxial assembly (see fig. 1). The chamber is sealed and initial pore pressure, specimen volume, chamber water temperature, and axial load readings are recorded. The specimen is loaded axially and the chamber pressure is increased to maintain zero lateral specimen strain. The required increase in chamber pressure is computed so that volume strain remains equal to axial strain. If the specimen expands or contracts laterally during testing, the lateral pressure is adjusted accordingly. Readings of axial deformation, pore pressure, lateral pressure, axial load, chamber water temperature, and volume change are observed and recorded as the test progresses. Axial loading is stopped as either (1) complete specimen saturation is approached, or (2) the load or pressure limits of the equipment are reached.

5. Significance and Use

5.1 To apply analytical techniques, such as the finite element method to analyze the state of stress in a soil mass, a number of soil parameters are necessary. Two of the soil parameters required are Poisson's ratio, μ, and a modulus value, E_d. Since there is unrecoverable deformation in obtaining the modulus for soil, it is referred to as modulus of deformation E_d. This procedure is used to obtain the two parameters, μ and E_d (see app. X5).

5.2 The K_o values are also used in retaining wall and pile design, slope stability analysis, and bearing capacity

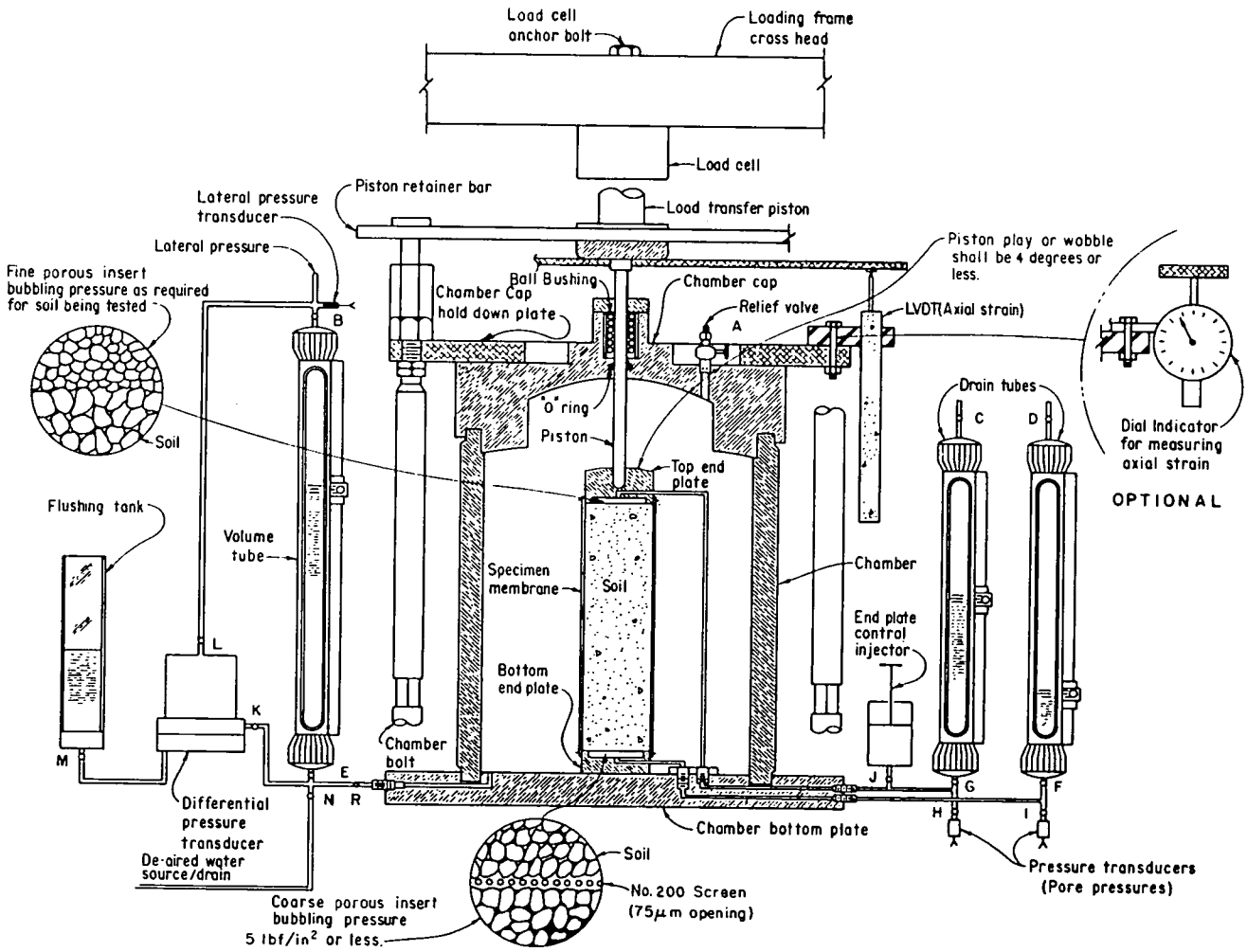

Figure 1. – Triaxial assembly for undrained tests.

predictions. In many situations, K_o may be estimated by empirical equations, e.g., $K_o = 1 \sin \phi'$ (Jaky [1]).[1]

5.3 Normally, the value of K_o is determined by testing partially saturated specimens in undrained compression. The value of K_o can also be determined on saturated or partially saturated specimens tested in drained compression. Using this procedure, the value of K_o cannot be determined for saturated specimens tested in undrained compression because specimen pore pressures instantaneously equal applied lateral pressure and application of axial load would create a negative effective stress condition in the specimen.

6. Terminology

6.1 Definitions are in accordance with USBR 3900. Terms of particular significance are:

6.1.1 *Coefficient of Earth Pressure at Rest* (K_o).–The ratio of: (1) the minor principal stress, to (2) the major principal stress. This is applicable where the soil mass is in its natural state without having been permitted to yield or without having been compressed (ASTM definition).

6.1.2 *Poisson's Ratio* (ν).–The ratio between linear strain changes perpendicular to and in the direction of a given uniaxial stress change.

6.1.3 *Modulus of Elasticity/Modulus of Deformation* (E, M, lbf/in^2 or GPa).–The ratio of stress to strain for a material under given loading conditions; numerically equal to the slope of the tangent or the secant of a stress-strain curve. The use of the term, Modulus of Elasticity is recommended for materials that deform in accordance with Hooke's law; the term, Modulus of Deformation, is recommended for materials that deform otherwise (ASTM).

6.2 A term not included in USBR 3900 specific to this designation is:

6.2.1 *Bubbling Pressure*.–Pressure required to force air through a saturated porous insert (also referred to as the air-entry value).

7. Apparatus

7.1 *General Apparatus*:

7.1.1 *Balance or Scale*.–Balance or scale meeting the requirements shown in table 1.

Table 1. – Balance or scale requirements.

Test specimen size				Balance or scale	
Diameter in	Height in	Diameter mm	Height mm	Capacity	Readability
2.0	5.0	50.8	127.0	1000 g	0.05 g
2.8	7.0	71.1	177.8	2000 g	0.1 g
6.0	15.0	152.4	381.0	25 kg	0.01 kg
9.0	22.5	228.6	571.5	75 kg	0.01 kg

7.1.2 *Timer*.–A timing device indicating elapsed time to the nearest 1 second is to be used for establishing the rate of stress or strain application.

7.1.3 *Specimen Size Measurement Devices*.–Devices used to measure the height and diameter of the specimen. The devices must be capable of measuring to the nearest 0.001 inch (0.025 mm) and should be constructed such that their use will not disturb the specimen. A vernier caliper is recommended for measuring specimen height and a pi tape for measuring specimen diameter.

NOTE 1.–For specimens having heights that exceed 12 inches (305 mm), use a rule graduated in millimeters to measure the height of the specimen to the nearest 1.0 mm (1/32 in).

7.1.4 *Water Container*.–Sufficient size to accommodate the test specimen.

7.1.5 *Suspension Wire and Specimen Carriage*.–For determining the specimen mass in air and water.

7.2 *Equipment Unique to This Procedure*:

7.2.1 *Axial Loading Device* (compression test machine).–A loading device (fig. 2) having sufficient capacity and control to provide the desired magnitude and rate of loading, respectively.

7.2.2 *Chamber Pressure Maintaining and Measurement Devices*.–Devices must be capable of applying and controlling the chamber pressure to within ±0.5 lbf/in^2 (±3.5 kPa). The devices may consist of a reservoir connected to the chamber and partially filled with the chamber fluid (usually water), with the upper part of the reservoir connected to a pressurized gas supply. The gas pressure is controlled by a pressure regulator and measured by a pressure gauge, electronic pressure transducer, or any other device capable of measuring to the prescribed tolerance. However, a hydraulic system pressurized by deadweight acting on a piston or any other pressure maintaining and

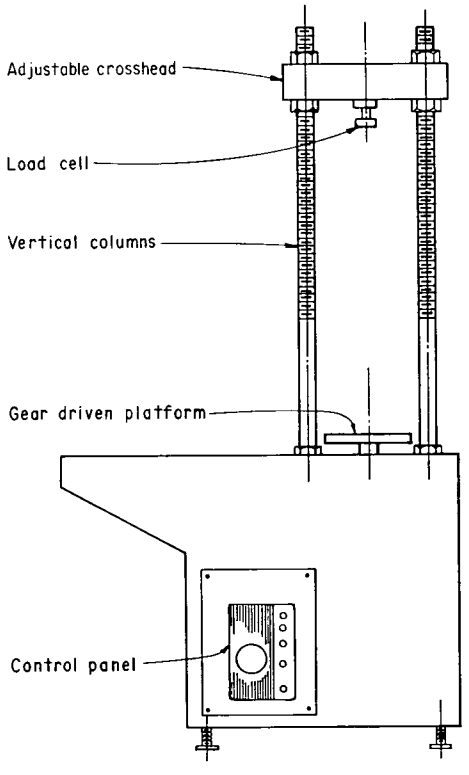

Figure 2. – Compression test machine.

[1] Number in brackets refers to the reference.

measurement device capable of applying and controlling the chamber pressure to the tolerance prescribed in this subparagraph may be used.

7.2.3 *Triaxial Assembly.*–A chamber (fig. 1) in which a cylindrical specimen, enclosed by a membrane sealed to end plates, is placed and subjected to axial load while confined by lateral (σ_3) pressure. The triaxial chamber consists of a chamber bottom plate, chamber, and chamber cap. The chamber cap includes a ball bushing and piston, aligned with the axis of the specimen, through which the load from the axial loading device can be transmitted to the specimen to cause the specimen to be compressed axially between the end plates. The ball bushing and piston must be designed to minimize friction.

7.2.3.1 *Specimen End Plates.*–The end plates must be constructed of a noncorrosive impermeable material such as aluminum, stainless steel, or titanium; each must have a circular cross section, and circular plane surface of contact with the specimen. The mass of the top end plate must be less than 0.5 percent of the applied axial load at failure. The diameter of the end plates should be within ±0.020 inch of the diameter of the specimen. The bottom end plate must be coupled to the chamber bottom plate to prevent lateral motion or tilting. The top end plate must be designed to receive the piston such that the piston-to-end plate contact area is concentric with the cap. It is recommended that the end plate be constructed in a manner so that piston play or "wobble" be restricted to 4 degrees or less perpendicular to the top end plate. Each end plate must be plumbed so air can be flushed from the end plate. The cylindrical surface of the end plates to which the membrane is sealed should be smooth and free of scratches. The end plates must be constructed so that drainage can occur from both ends of the specimen. Each end plate shall be fitted with a porous insert.

7.2.3.2 *Porous End Plate Inserts.*–Porous inserts are manufactured from silicon carbide, aluminum oxide, sintered bronze, or ceramic. The material must not be susceptible to corrosion by soil substances or moisture. The proper grade (coarseness) of insert depends upon the type of test being performed and the soil being tested. The insert should be coarse enough to develop adequate interlock with the specimen, but fine enough to prevent excessive intrusion of soil into the pores of the insert. Exact criteria for this have not been established. The coarseness of insert material determines two properties vital to pore pressure measurements: (1) permeability, the rate of diffusion of a pressurized gas through a porous material, and (2) bubbling pressure, the air entry value; i.e., the air pressure required to force air through a saturated porous insert.

7.2.3.3 *Axial Load-Measuring Device.*–The load measuring device shall be capable of measuring the axial load to an accuracy of ±0.25 percent over its full range.

7.2.3.4 *Pore Pressure Transducers.*–The pore pressure transducers are used to measure the pore pressure in the soil specimen. The pressure transducers shall have an accuracy of ±0.25 percent over their full range.

7.2.3.5 *Lateral Pressure Transducer.*–The lateral pressure transducer is used to measure the lateral pressure applied inside the chamber. The transducer shall have an accuracy of ±0.25 percent over its full range.

7.2.3.6 *Differential Pressure Transducer.*–The differential pressure transducer is used to measure volume change of the specimen during the test. The transducer and the volume tube are plumbed so that the height of the water column in the volume tube reacts directly on the measuring diaphragm inside the transducer. The transducer shall have an accuracy of ±0.25 percent of its full range.

7.2.3.7 *Volume Tube.*–A constant bore glass tube supported by a sectional brass pipe with watertight seals on both ends. The volume tube is used primarily as a means of visually monitoring the volume change of the specimen. However, it serves also as a water reservoir and flushing tube when de-airing the system. For triaxial systems, in which visual readings of the volume tube are used in determining volume change of the specimen, the volume tube should be graduated in 0.01 inch divisions. For triaxial systems, in which a differential pressure transducer (as described in subpar. 7.2.3.6) is used in determining volume change of the specimen, it is recommended that the volume tube be graduated in 0.1 inch divisions so that a visual check of the specimen volume change can be made. The volume tube must be capable of withstanding pressures up to 250 lbf/in² (1724 kPa). The volume tube assembly must be enclosed in a 1/4-inch-thick (6-mm) Plexiglas shield to prevent injury to personnel in the event the volume tube fails.

7.2.3.8 *Drain Tube.*–A constant bore glass tube supported by a sectional brass pipe with watertight seals on both ends. The drain tubes can be used as a water reservoir and flushing tube when de-airing the system and as back pressure and drainage reservoirs. The drain tube must be capable of withstanding pressures up to 250 lbf/in² (1724 kPa). The drain tube assembly must be enclosed in a 1/4-inch-thick (6-mm) Plexiglas shield to prevent injury to personnel in the event the drain tube fails.

7.2.3.9 *Flushing Tank.*–Plexiglas tube used in conjunction with the volume tube to de-air the differential pressure transducer.

7.2.3.10 *Axial Deformation Indicator.*–A dial indicator or LVDT (linear variable differential transducer) having 0.001-inch (0.025-mm) resolution, and travel range of at least 20 percent of the initial height of the test specimen. Other measuring devices meeting these requirements for precision and range may be used.

7.2.3.11 *Specimen Membrane.*–A membrane is used to encase the specimen to isolate it from chamber fluid. Membranes should be carefully inspected prior to use; if any flaws or pinholes are evident, the membrane should be replaced. To minimize restraint to the specimen, the unstretched membrane diameter should be between 75 and 90 percent of the specimen diameter. The membrane thickness must not exceed 1 percent of the diameter of the specimen. The membrane must be sealed to the end plates with two rubber O-rings for which the unstressed inside diameter is 75 percent or less of the diameter of the end plates. Other methods that produce a positive seal may be used.

7.2.3.12 *Fine Mesh Screen.*–A No. 200 (75 μm) mesh screen to be placed between the specimen and the porous insert of the bottom end plate.

7.2.3.13 *End Plate Control Injector.*–A water-filled hydraulic system which uses a threaded rod attached to an O-ring sealed piston. The operator can manually control pore water pressure by rotating the knob on the injector system clockwise to increase the pressure or counterclockwise to decrease the pressure in the system.

NOTE 2.–The end plate control injector is to be used only to control the hydraulic system for measuring pore water pressure to ensure that it does not cavitate; i.e., does not exceed about minus 8.0 lbf/in² (–55 kPa).

7.3 *Miscellaneous Apparatus*:

7.3.1 *Tools, Etc.*–Specimen trimming and carving tools, membrane expander, O-rings expander, moisture content cans, and data forms as required.

7.3.2 *Calculator.*–A programmable calculator having sufficient capability to accommodate necessary constants and factors so that the operator can almost instantaneously compute projected volume tube recovery at any time during the test.

7.3.3 *Humidity Room.*–A soil storage and sample preparation room with controlled temperature and humidity. The humidity room at the Geotechnical Services Laboratory at the Denver Office is designed to maintain 70±5 percent relative humidity and temperature of 70±5 °F (21±3 °C).

8. Reagents and Materials

8.1 Water used for performing the test is to be de-aired water at room temperature. The purity should be such that the water is free of acids, alkalies, or oils, and is suitable for drinking.

9. Precautions

9.1 *Safety Precautions*:

9.1.1 Safety shoes should be worn when de-airing the equipment or placing the specimen.

9.1.2 Water spillage in the area should be cleaned up as soon as possible.

9.1.3 Safety glasses should be worn when applying air pressure to the volume/drain tubes when saturating or consolidating the specimen.

9.1.4 Pressure should be slowly applied and released from the triaxial assembly to prevent the glass volume tubes from shattering.

9.2 *Technical Precautions*:

9.2.1 Care must be taken to completely de-air the triaxial assembly prior to performing the test.

9.2.2. The porous inserts in the end plates should be cleaned frequently to remove any impurities which may inhibit free waterflow.

9.2.3 When performing a UU-type test on an unsaturated specimen, the increase in pore pressure with corresponding decrease in specimen volume accelerates rapidly as the test specimen approaches complete saturation. As this occurs, it is not reasonable to assume that pore pressure in the specimen can equalize; and as a result, the measured pore pressure response may not be accurate.

9.2.4 When performing a CD-type test, the rate of strain should be sufficiently slow to allow complete dissipation of pore pressure in the specimen.

10. Sampling, Test Specimens, and Test Units

10.1 *Sample Size*:

10.1.1 *Compacted specimens*:

10.1.1.1 Samples to be used in triaxial shear testing of compacted specimens should be obtained in accordance with methods presented in USBR 7000 or 7010.

10.1.1.2 A sufficient mass of material should be obtained so that all required testing can be performed on the sample. Suggested minimum sample mass (based on minimum specimen size, maximum particle size, and a minimum of four specimens per test) should be in accordance with table 2.

Table 2. – Suggested minimum sample mass.

Test specimen size				Practical field sample mass	
Diameter in	Height in	Diameter mm	Height mm	lbm	kg
2.0	5.0	50.8	127.0	65	30
2.8	7.0	71.1	177.8	100	45
6.0	15.0	152.4	381.0	200	90
9.0	22.5	228.6	571.5	700	320

10.1.2 *Undisturbed specimens.*–Samples to be used in triaxial shear testing of undisturbed specimens should be obtained in accordance with methods presented in USBR 7100 or 7105.

10.2 *Specimen Size*:

10.2.1 Test specimen size and maximum particle size should be in accordance with table 3.

Table 3. – Specimen and maximum particle size.

Test specimen size				Maximum particle size	
Diameter in	Height in	Diameter mm	Height mm	in	mm
2.0	5.0	50.8	127.0	No. 4	4.75
2.8	7.0	71.1	177.8	0.375	9.5
6.0	15.0	152.4	381.0	0.75	19.0
9.0	22.5	228.6	571.5	1.5	37.5

10.2.2 If, after completion of a test, it is found that oversize particles were present indicate this information in the report of test data under *Remarks*.

NOTE 3.–For specimen sizes and maximum particle sizes not listed in table 3, maximum particle size should be equal to or less than one-sixth the specimen diameter.

10.2.3 Specimen height-to-diameter ratio must be between 2 and 3.

10.3 *Compacted Specimens.*–Prepare compacted test specimens in accordance with USBR 5210.

10.4 *Undisturbed Specimens.*–Prepare undisturbed test specimens in accordance with USBR 5215.

10.5 *Remolded Specimens*:

10.5.1 Prepare remolded test specimens by thoroughly working with the fingers an undisturbed specimen encased in the specimen membrane and mounted on the end plates.

10.5.2 Place a mold around the specimen and push down on the top end plate until the specimen fills the mold. The mold must have dimensions such that the remolded specimen dimensions will be equal to those of the undisturbed specimen. Care should be taken so the specimen membrane is not damaged or punctured during the remolding process.

10.5.3 Care must be taken to avoid entrapping air in the specimen during remolding. Entrapment of air may result in a remolded specimen having a unit weight, void ratio, and/or moisture content inconsistent with that of the undisturbed specimen.

10.6 *Determine Initial Capillary Pressure of Partially Saturated Soil Specimens*:

10.6.1 Determine the initial capillary pressure of the soil in accordance with USBR 5735.

10.6.2 Compute and plot the theoretical pore air pressure of the specimen (see app. X4).

11. Preparation of Apparatus

11.1 *Saturation of Porous Inserts and De-Airing of End Plates*:

11.1.1 If new porous inserts with a bubbling pressure greater than 5 lbf/in² (35 kPa) are to be used for the test, the end plate, connecting lines and porous insert are to be completely submerged in de-aired water and boiled from 8 to 16 hours to ensure that all entrapped air has been removed.

11.1.2 If end plates, with previously saturated porous inserts with a bubbling pressure greater than 5 lbf/in² are to be re-used for the test, the end plates, connecting lines, and porous inserts are to be removed from the triaxial assembly, completely submerged in deaired water, and boiled for a minimum of 4 hours to remove any entrapped air.

11.1.3 If new porous inserts with a bubbling pressure of 5 lbf/in² or less are to be used for the test, the end plates, connecting lines, and porous inserts are to be completely submerged in de-aired water and boiled for a minimum of 2 hours to ensure that all entrapped air has been removed.

11.1.4 If end plates with previously saturated porous inserts with a bubbling pressure of 5 lbf/in² or less are to be reused for the test, the end plates, connecting lines, and porous inserts can be left in the triaxial assembly for subsequent tests and de-aired using vacuum.

11.2 *De-Airing the Triaxial Assesmbly* (fig. 1):

11.2.1 Attach the saturated end plates with porous inserts to the chamber bottom plate.

11.2.1.1 Place the bottom end plate with centering dowel into the hole in the center of the chamber bottom plate.

11.2.1.2 To ensure that pressure does not build up in the system when the end plate connecting lines are attached to the fittings in the chamber bottom plate, open valve F or G slightly to allow a small amount of water to flow from the appropriate drain tube and flushing tank through the fittings in the chamber bottom plate while the appropriate end plate connecting lines are being attached.

11.2.1.3 Open valve F. Attach the bottom end plate connecting lines to the appropriate fittings in the chamber bottom plate. Close valve F.

11.2.1.4 Open valve G. Attach the top end plate connecting lines to the appropriate fittings in the chamber bottom plate. Close valve G.

11.2.2 Place the chamber into the groove in the chamber bottom plate.

11.2.3 Check that all system valves are closed.

11.2.4 Fill the chamber about one-half full with de-aired water.

11.2.5 Open chamber cap relief valve A.

11.2.6 Set the chamber cap in place and force the cap down until it is properly seated on the chamber.

11.2.7 Insert the piston through the opening in the chamber cap until the flange on the piston is resting on top of the chamber cap.

11.2.8 Open the valves on top of the volume and drain tubes (valves B, C, and D).

11.2.9 If the unit is equipped with an end plate control injector, open valve J and turn the injector knob to the closed position (clockwise). Close valve J to the injector.

11.2.10 Attach vacuum hoses to the tops of the volume tube, drain tubes, and the fitting on chamber cap relief valve A.

11.2.11 Attach the other ends of the vacuum hoses into a suitable vacuum source, such as a vacuum pump. Turn on the vacuum pump.

11.2.12 Apply a vacuum of about 20 lbf/in² (140 kPa) for 5 minutes.

11.2.13 Release the vacuum to the chamber by uncoupling the vacuum line from the vacuum pump multiport manifold. Maintain the vacuum on the volume tube and drain tubes.

11.2.14 Open volume tube drain valve E and the isolation valve R, and fill the volume tube to the top of its markings with de-aired water from the chamber (vacuum is still on the volume tube).

11.2.15 Close volume tube drain valve E.

11.2.16 Open drain tube drain valves F and G and fill the drain tubes to the top of their markings with de-aired water from the chamber (vacuum is still on the drain tubes).

11.2.17 Close drain tube valves F and G.

11.2.18 Release the vacuum from the volume and drain tubes by uncoupling the appropriate vacuum lines from the vacuum pump.

11.2.19 Reattach the vacuum hose to chamber cap relief valve A to the vacuum source.

11.2.20 Open valve E and allow the water level in the volume tube to drop to about the 25-inch (635-mm) level.

11.2.21 Close volume tube drain valve E.

11.2.22 Open drain tube valves F and G, and allow the water level in the drain tubes to drop to about the 25-inch level.

11.2.23 Close drain tube valves F and G.

11.2.24 Reattach vacuum hoses to the tops of the volume tube and drain tubes.

11.2.25 Displace water back and forth between the volume and drain tubes and the chamber by repeating subparagraphs 11.2.13 through 11.2.25 until air bubbles can not be seen in the tubes.

11.2.26 Open valve J and turn the end plate control injector knob until the injector piston is at the open position (counterclockwise) to fill the injector with water.

11.2.27 Turn the injector control knob to move the injector piston to its full closed and full open positions several times to remove any entrapped air.

11.2.28 Leave the end plate control injector piston at midrange position for testing and close valve J.

11.2.29 If the volume and drain tubes are not full at the end of the flushing process fill the tubes, by opening valves E, F, and G, with vacuum applied to the top of each tube. Fill the volume and drain tubes to the top of their tube markings with de-aired water so they can be drained to the desired level for testing purposes. Close valves A, E, F, and G.

11.2.30 Uncouple all vacuum lines from the manifold on the vacuum pump and shut off the vacuum pump.

11.2.31 Uncouple all vacuum lines from the triaxial assembly, coil the vacuum lines, and store in a suitable location for future use.

11.2.32 Do not drain the water from the chamber until the end plates and specimen are ready to be placed in the chamber as outlined in paragraph 14.

11.3 *De-Airing the Pore Pressure Transducers*:

11.3.1 Check that valves H and I are closed, then detach the pore pressure transducers from their fittings on the apparatus. Using a syringe, fill each transducer with de-aired water.

11.3.2 Open valve A. Slowly open valve H to allow a small flow of water to escape from the chamber. With water flowing, attach the transducer for the bottom end plate to the appropriate fitting. Leave valve H open.

11.3.3 Slowly open valve I to allow a small flow of water to escape from the chamber. With water flowing, attach the transducer for the top end plate to the appropriate fitting. Leave valve I open. Close valve A.

11.4 *De-Airing the Differential Pressure Transducer*:

11.4.1 Fill the flushing tank on the differential pressure transducer about two-thirds full of de-aired water. Close the volume tube isolation valve R to isolate the volume tube and differential pressure transducer from the chamber.

11.4.2 Open valve L on the differential pressure transducer. Remove the bottom plate on the differential pressure transducer by unscrewing the four cap head screws which hold it to the body of the transducer. Open valve M and fill the bottom plate with de-aired water from the flushing tank. Open valves E and K to the volume tank and allow water to flood over the exposed capsule located under the main body of the differential pressure transducer. With water flowing, place the bottom plate back on the differential pressure transducer, while being careful not to entrap air. Close valve K, but leave valve M to the flushing tank slightly open to relieve any pressure which results from tightening the cap screws. Tighten the four cap lead screws.

11.4.3 Flush the differential pressure transducer thoroughly by attaching a hand-held vacuum/pressure pump to the top of the flushing tank. Open valves K and M and flush water back and forth several times from the flushing tank and volume tube through the differential transducer. When this step is complete, be sure the water level in the volume tube is near the full mark and close valve M. Open volume tube isolation valve R.

NOTE 4.–Extreme caution must be used when flushing the differential pressure transducer, since a pressure greater than about 10 lbf/in^2 (70 kPa) can damage the measuring capsule inside the transducer.

12. Calibration and Standardization

12.1 Verify that component parts of the triaxial assembly are currently calibrated in accordance with the applicable calibration procedure. If the calibration is not current, perform the calibration before using the equipment for this procedure.

13. Conditioning

13.1 Prepare, place, and load the test specimen in an area isolated from drafts, vibrations, and variations in ambient temperature.

14. Procedure

14.1 All data are to be recorded on the "Triaxial Shear Test" data forms as shown on figures 3, 4, and 5.

14.2 Record all identifying information pertaining to the sample, specimen, and triaxial assembly.

14.3 Connect a hose to valve N; place the other end of the hose in an empty container or into a drain.

14.4 Open valves A and N and drain all water from the chamber. Close valve N.

14.5 Remove the piston, the chamber cap, and the chamber from the chamber bottom plate.

14.6 Verify that volume tube valve B, drain tube valves C and D, and volume tube isolation valve R are open.

14.7 Verify that all remaining valves to the chamber are closed.

14.8 Open drain tube valve F and lower the water in the drain tube to a level about 6 inches (150 mm) above the chamber bottom plate. The water will exit through the chamber bottom plate of the triaxial assembly and it will be necessary to absorb the excess water with a towel or other appropriate absorbent material.

14.9 Close valve F.

14.10 Open drain tube valve G and lower the water in the drain tube to a level about 2 inches (50 mm) above

7-2367 (10-86)
Bureau of Reclamation

SPECIMEN PLACEMENT-DATA SHEET 1
(FOR TRIAXIAL SHEAR TESTS)

Designation USBR 5740-89

SAMPLE NO.	PROJECT	FEATURE
TP-100	Example	Example

LOCATION	DEPTH/ELEV
Embankment A	10.0 - 20.0 ft.

TESTED BY / DATE	COMPUTED BY / DATE	CHECKED BY / DATE

SPECIMEN TYPE: ☐ UNDISTURBED ☐ NATURAL MOISTURE ☒ COMPACTED ☐ WETTED

TEST TYPE: ☐ UU ☐ CD ☐ MULTISTAGE ☐ CU ☐ UKo ☒ DKo

SPECIMEN DIAMETER 2.00 (in) SPECIMEN LENGTH 5.00 (in)

PHYSICAL PROPERTIES

% GRAVEL 5 LIQUID LIMIT 35 (%) (USBR 5350)

% SAND 33 (USBR 5325) PLASTICITY INDEX 15 (%) (USBR 5360) CLASSIFICATION SYMBOL CL

% FINES 62 SPECIFIC GRAVITY 2.70 (USBR 5320)

		SPECIMEN 1	SPECIMEN 2	SPECIMEN 3
(1) MASS OF WET SPECIMEN AND CONTAINER IN AIR	(g)	700.90		
(2) MASS OF CONTAINER IN AIR	(g)	157.30		
(3) MASS OF WET SPECIMEN (1) - (2)	(g)	543.60		
(4) MASS OF DRY SPECIMEN (3)/[1 + (12)/100]	(g)	487.53		
(5) MASS OF WET SPECIMEN AND CONTAINER IN WATER	(g)	361.83		
(6) MASS LOSS OF WET SPECIMEN AND CONTAINER = (1) - (5)	(g)	339.07		
(7) MASS OF CONTAINER IN WATER	(g)	79.60		
(8) MASS LOSS OF CONTAINER = (2) - (7)	(g)	77.70		
(9) MASS LOSS OF SPECIMEN = (6) - (8)	(g)	261.37		
(10) SPECIMEN VOLUME = (9)/16.3498*	(in^3)	15.986		
(11) DRY UNIT WEIGHT = [(4) x 3.8096*]/(10)	(lbf/ft^3)	116.2		
(12) MOISTURE CONTENT (USBR 5300) (FROM BACK)	(%)	11.5		
(13) SOIL VOLUME = (4)/(SpG x 16.3498*)	(in^3)	11.044		
(14) PERCENT SOIL VOLUME = [(13)/(10)] x 100	(%)	69.1		
(15) WATER VOLUME = [(3) - (4)]/16.3498*	(in^3)	3.429		
(16) PERCENT WATER VOLUME = [(15)/(10)] x 100	(%)	21.5		
(17) FREE AIR VOLUME = (10) - (13) - (15)	(in^3)	1.513		
(18) PERCENT FREE AIR VOLUME = 100 - (14) - (16)	(%)	9.4		
(19) VOID RATIO = [(10)-(13)]/(13)		0.447		
(20) DEGREE OF SATURATION = $\frac{(15)}{(10) - (13)} \times 100$	(%)	69.4		

*CONSTANTS: 16.3498 g/in^3 = $(2.54)^3$ x 0.997724 ($(cm/in)^3$ x abs. density of water in g/cc @ 72 F.
3.8096 = (1728 in^3/ft^3) / (453.5924 g/lbm), 1 cc = 1 g @ 4°C

Figure 3. - Specimen placement—data sheet 1 (for triaxial shear tests)—example.

SAMPLE NUMBER TP-100

MOISTURE CONTENT DATA

	SPECIMEN 1	SPECIMEN 2	SPECIMEN 3	UNITS
CONTAINER NUMBER	A-6			
DATE PLACED IN OVEN	12-1-89			
(1) MASS OF CONTAINER + WET SPECIMEN	346.26			☒ g
(2) MASS OF CONTAINER + DRY SPECIMEN	335.45			
(3) MASS OF CONTAINER	241.48			☐ kg
(4) MASS OF WATER = (1) – (2)	10.81			
(5) MASS OF DRY SPECIMEN = (2) – (3)	93.97			☐ lbm
(6) MOISTURE CONTENT (%) = [(4)/(5)] X 100	11.5			
COMPUTED BY AND DATE				
CHECKED BY AND DATE				

COMPACTION DATA

(116.0) x (1.115) = (129.3) x (4.14) = 535.3/10 = 53.53

dry unit wt. | 1 + moist. | wet den. | factor (USBR 5210)

231.7 CONTAINER

767.0 TOTAL

LAYER	MASS (g)	LENGTH (in)	LAYER	MASS (g)	LENGTH (in)
(1)	713.5		(6)	445.8	
(2)	659.9		(7)	392.3	
(3)	606.4		(8)	338.8	
(4)	552.9		(9)	285.2	
(5)	449.4		(10)	231.7	

COMPUTED BY _____ DATE _____ CHECKED BY _____ DATE _____

CONTAINER MASSES

	PARTS	MASS - SPECIMEN 1 (g) AIR	WATER	LOSS	PARTS	MASS - SPECIMEN 2 (g) AIR	WATER	LOSS	PARTS	MASS - SPECIMEN 3 (g) AIR	WATER	LOSS
CARRIAGE NO.	1	78.7		8.6								
MEMBRAINE NO.	C-31	15.3		16.2								
END PLATES	C-14	59.7		50.0								
2-'O'- RINGS												
MISC.		3.6		2.9								
TOTAL		157.3		77.7								

COMPUTED BY _____ DATE _____ CHECKED BY _____ DATE _____

Figure 3. - Specimen placement—data sheet 1 (for triaxial shear tests)—Continued.

7-2371 (10-86)
Bureau of Reclamation

TRIAXIAL SHEAR TEST-DATA SHEET 2

Designation USBR 5740-89

SAMPLE NO.	SPECIMEN NO.	PROJECT	FEATURE
TP-100	1	Example	Example

TESTED BY	DATE	COMPUTED BY	DATE	CHECKED BY	DATE

Displacement rate 0.002 [X] in/min [ ] mm/min

Applied lateral pressure N/A [ ] lbf/in² [ ] kPa

Back pressure N/A [ ] lbf/in² [ ] kPa

Barometric pressure 12.0 [ ] lbf/in² [X] kPa

Pore-Pressure Coefficient(B) (saturation parameter) N/A

Volume Change of System — USBR 1450

Max. Lat. 1 10 Slope 1 0.0125 Intercept 1 0.000

Max. Lat. 2 50 Slope 2 0.0033 Intercept 2 0.125

Max. Lat. 3 111 Slope 3 0.0015 Intercept 3 0.257

Slope 4 0.0009 Intercept 4 0.349

Chamber No. 29 Compression test machine No. 1

(a) Load piston area, A_p 0.1964 [X] in² [ ] cm²

(b) Volume tube factor, VT_f 0.110 [X] in³/in [ ] cm³/cm

(c) Drain tube factor, DT_f 0.025 [X] in³/in [ ] cm³/cm

(d) Temp. corr. coefficent, T_f 0.0115 [X] in³/°F [ ] cm³/°C

	Applied Lateral press.		Deviator Load		Axial Specimen Deformation		Volume Tube Reading		Pore Pressure Top		Pore Pressure Bottom		Drain Tube Reading Tube 1		Drain Tube Reading Tube 2		Temperature	
	(lbf/in²)	kPa	(lbf)	Newtons	(in)	mm	(in)	cm	(lbf/in²)	kPa	(lbf/in²)	kPa	in	cm	in	cm	(°F)	°C
	(1)		(2)		(3)		(4)		(5)		(6)		(7)		(8)		(9)	
1	0		0		1.170		5.35		-9.5		0.0						69.8	
2	1.3		35		1.160		5.73		-9.4		0.0						69.8	
3	10.4		50		1.150		6.84		-9.1		0.0						69.8	
4	22.6		62		1.140		7.67		-8.7		0.9						69.8	
5	25.4		79		1.130		8.02		-8.4		1.3						69.8	
6	28.4		87		1.120		8.38		-8.2		1.6						69.8	
7	29.7		99		1.110		8.68		-8.0		2.0						69.8	
8	32.3		105		1.100		9.03		-7.6		2.5						69.8	
9	34.4		112		1.090		9.35		-7.3		2.9						69.8	
10	38.2		116		1.080		9.74		-6.8		3.5						69.8	
11	40.1		122		1.070		10.07		-6.3		4.1						69.8	
12	43.4		125		1.060		10.43		-5.7		4.6						69.8	
13	45.3		132		1.050		10.76		-5.0		5.3						70.0	
14	46.9		138		1.040		11.07		-4.3		5.9						70.0	
15	49.7		141		1.030		11.43		-3.4		6.5						70.0	
16	52.8		147		1.020		11.89		-1.6		7.9						70.0	
17	55.8		153		1.010		12.18		-0.3		8.8						70.0	
18	55.9		159		1.000		12.47		0.8		9.4						70.2	
19	62.8		165		0.990		12.77		1.8		10.0						70.2	
20	65.0		170		0.980		13.06		3.4		10.8						70.2	

GPO 852 - 188

Figure 4. - Triaxial shear test—data sheet 2—example.

7-2371A (10-86)
Bureau of Reclamation

TRIAXIAL SHEAR TEST-DATA SHEET 2a

Designation USBR 5740.89

SAMPLE NO.	SPECIMEN NO.	PROJECT	FEATURE
TP-100	1	Example	Example

TESTED BY	DATE	COMPUTED BY	DATE	CHECKED BY	DATE

	Applied Lateral Press.		Deviator Load		Axial Specimen Deformation		Volume Tube Reading		Pore Pressure Top		Pore Pressure Bottom		Drain Tube Reading Tube 1.		Drain Tube Reading Tube 2.		Temperature	
	lbf/in²	kPa	lbf	Newtons	in.	mm	in.	cm	lbf/in²	kPa	lbf/in²	kPa	in	cm	in	cm	°F	°C
	(1)		(2)		(3)		(4)		(5)		(6)		(7)		(8)		(9)	
21	67.8		177		0.970		13.35		5.2		11.9						70.2	
22	69.8		185		0.960		13.63		6.7		13.0						70.2	
23	71.6		194		0.950		13.92		8.1		14.9						70.2	
24	76.7		201		0.940		14.23		10.5		15.5						70.2	
25	80.8		210		0.930		14.53		12.7		16.9						70.2	
26	85.8		216		0.920		14.84		14.7		18.5						70.2	
27	89.9		226		0.910		15.14		17.3		20.5						70.2	
28	92.9		237		0.900		15.43		19.3		22.3						70.2	
29	99.0		243		0.890		15.75		22.2		24.6						70.2	
30	105.8		253		0.880		16.07		25.6		27.5						70.5	
31	110.7		262		0.870		16.38		29.2		30.6						70.5	
32	116.9		271		0.860		16.70		33.0		33.7						70.5	
33	126.7		280		0.850		17.05		38.1		37.5						70.5	
34	137.4		289		0.840		17.40		44.7		42.3						70.5	
35	142.8		302		0.830		17.75		53.3		47.7						70.5	
36	157.6		318		0.820		18.10		62.6		53.0						70.5	
37	179.5		329		0.810		18.55		77.7		60.0						70.5	
38																		
39																		
40																		
41																		
42																		
43																		
44																		
45																		
46																		
47																		
48																		
49																		
50																		
51																		
52																		
53																		

GPO 852 - 189

Figure 4. - Triaxial shear test—data sheet 2a—Continued.

7-2373 (1-89)
Bureau of Reclamation

K_o TEST — DATA SHEET 3

Designation USBR 5740-89

SAMPLE NO.	SPECIMEN NO.	PROJECT	FEATURE
TP-100	1	Example	Example

INITIAL SPECIMEN VOLUME (V_o)	INITIAL SPECIMEN LENGTH (L_o)	INITIAL SPECIMEN AREA ($A_o = V_o + L_o$)
15.986 ☒ in^3 ☐ mm^3	5.000 ☒ in ☐ mm	3.197 ☒ in^2 ☐ mm^2

TESTED BY	DATE	COMPUTED BY	DATE	CHECKED BY	DATE

	Applied lateral pressure (σ_3) (from column 1) (1.0)	Corrected deviator load $P_{dc}=(2)-[(10)\times(A_p)]$	Axial specimen deformation* $\Delta L=(3_1)-(3_i)$	Volume tube change* $\Delta VT=(4_1)-(4_i)$	Converted volume tube change $\Delta VT_n=(13)\times(VT_f)$	System volume change due to applied lateral pressure $\Delta VC=[(10)-LTPR]\times SL+Y$	Volume change due to piston movement $\Delta V_p=(12)\times(A_p)$	Volume change due to temperature change $\Delta TV=[(9_1)-(9_i)]\times(T_f)$	Total volume change $\Delta V=(14)+(15)-(16)+(17)$	Specimen volume $V_i=V_o+(18)$	Specimen length $L_i=L_o-(12)$	Axial strain $\epsilon=\frac{(12)}{L_o}\times100$	Volume strain from initial $\epsilon=\frac{(18)-(-1.0)}{V_o}\times100$	Volume strain from start of shear $\epsilon_{vs}=\frac{[(18)-(18)\text{at start of shear}]-(-1.0)}{\text{spec. volume at start of shear}}\times100$	Effective lateral stress $\sigma 3'=(10)-(6)$ ** (Minor effective principal stress)	Corrected specimen area $A_c=(19)/(20)$	Deviator stress $\sigma_d=(11)/(25)$	Effective axial stress $\sigma 1'=(24)+(26)$ (Major effective principal stress)	$K_o=$ $(24)/(27)$	Poissons ratio $\mu=(28)/[1+(28)]$	Modulus of deformation $E_d=\frac{[1-2(29)][(27)+2(24)]}{(22/100)}$
	lbf/in² kPa	lbf kN	in mm	in cm	in³ cm³	in³ cm³	in³ cm³	in³ cm³	in³ cm³	in³ cm³	in cm	%	%	%	lbf/in² kPa	in² cm²	lbf/in² kPa	lbf/in² kPa			lbf/in² kPa
	(10)	(11)	(12)	(13)	(14)	(15)	(16)	(17)	(18)	(19)	(20)	(21)	(22)	(23)	(24)	(25)	(26)	(27)	(28)	(29)	(30)
1	0	0.0	0.000	0.000	0.000	0.000	0.000	0.000	0.000	15.986	5.000	0.00	0.00	–	0.0	3.197	0.00	0.00	0.000	0.000	0
2	1.3	34.7	0.010	-0.38	-0.042	0.020	0.002	0.000	-0.024	15.962	4.990	0.20	0.15	–	1.3	3.199	10.85	12.15	0.107	0.097	7926
3	10.4	48.0	0.020	-1.49	-0.164	0.126	0.004	0.000	-0.042	15.944	4.980	0.40	0.26	–	10.4	3.202	14.99	25.39	0.410	0.291	7426
4	22.6	57.6	0.030	-2.32	-0.255	0.167	0.006	0.000	-0.094	15.892	4.970	0.60	0.59	–	21.7	3.198	18.01	39.71	0.546	0.353	4141
5	25.4	74.0	0.040	-2.67	-0.294	0.176	0.008	0.000	-0.126	15.860	4.960	0.80	0.79	–	24.1	3.198	23.14	47.24	0.510	0.338	3914
6	28.4	81.4	0.050	-3.03	-0.333	0.186	0.010	0.000	-0.157	15.829	4.950	1.00	0.98	–	26.8	3.198	25.45	52.25	0.513	0.339	3478
7	29.7	93.2	0.060	-3.33	-0.366	0.190	0.012	0.000	-0.188	15.798	4.940	1.20	1.18	–	27.7	3.198	29.14	56.84	0.487	0.328	3272
8	32.3	98.7	0.070	-3.68	-0.405	0.199	0.014	0.000	-0.220	15.766	4.930	1.40	1.38	–	29.8	3.198	30.86	60.66	0.491	0.329	2980
9	34.4	105.2	0.080	-4.00	-0.440	0.206	0.016	0.000	-0.250	15.736	4.920	1.60	1.56	–	31.5	3.198	32.90	64.40	0.489	0.328	2809
10	38.2	108.5	0.090	-4.39	-0.483	0.218	0.018	0.000	-0.283	15.703	4.910	1.80	1.77	–	34.7	3.198	33.93	68.63	0.506	0.336	2558
11	40.1	114.1	0.100	-4.72	-0.519	0.224	0.020	0.000	-0.315	15.671	4.900	2.00	1.97	–	36.0	3.198	35.68	71.68	0.502	0.334	2421
12	43.4	116.5	0.110	-5.08	-0.559	0.235	0.022	0.000	-0.346	15.640	4.890	2.20	2.16	–	38.8	3.198	36.43	75.23	0.516	0.340	2264
13	45.3	123.1	0.120	-5.41	-0.595	0.241	0.024	-0.002	-0.380	15.606	4.880	2.40	2.38	–	40.0	3.198	38.49	78.49	0.510	0.338	2158
14	46.9	128.8	0.130	-5.72	-0.629	0.247	0.026	-0.002	-0.410	15.576	4.870	2.60	2.56	–	41.0	3.198	40.28	81.28	0.504	0.335	2105
15	49.7	131.2	0.140	-6.08	-0.669	0.256	0.027	-0.002	-0.442	15.544	4.860	2.80	2.76	–	43.2	3.198	41.03	84.23	0.513	0.339	1991
16	52.8	136.6	0.150	-6.54	-0.719	0.261	0.029	-0.002	-0.489	15.497	4.850	3.00	3.06	–	44.9	3.195	42.75	87.65	0.512	0.339	1867
17	55.8	142.0	0.160	-6.83	-0.751	0.266	0.031	-0.002	-0.518	15.468	4.840	3.20	3.24	–	47.0	3.196	44.43	91.43	0.514	0.339	1843
18	55.9	148.0	0.170	-7.12	-0.783	0.266	0.033	-0.005	-0.555	15.431	4.830	3.40	3.47	–	46.5	3.195	46.32	92.82	0.501	0.334	1778
19	62.8	152.7	0.180	-7.42	-0.816	0.276	0.035	-0.005	-0.580	15.406	4.820	3.60	3.63	–	52.8	3.196	47.78	100.58	0.525	0.344	1772
20	65.0	157.2	0.190	-7.71	-0.848	0.280	0.037	-0.005	-0.610	15.376	4.810	3.80	3.82	–	54.2	3.197	49.17	103.37	0.524	0.344	1730

GPO 859-019

*Subscript 1 denotes initial reading
Subscript i denotes any subsequent reading

**Bottom pore pressure shown; may use top pore pressure value (10) - (5)
or average pore pressure, (10) - {[(5) + (6)] ÷ 2)

Figure 5. – K_o –test—data sheet 3—example.

7-2373 (1-89) Bureau of Reclamation

K_o TEST—DATA SHEET 3a

Designation USBR 5740-89

SAMPLE NO.	SPECIMEN NO.	PROJECT	FEATURE
TP-100	1	Example	Example

TESTED BY	DATE	COMPUTED BY	DATE	CHECKED BY	DATE

	Applied lateral pressure (σ_3) (from column 1) (1.0)	Corrected deviator load $P_{dc}=[2]-C[10]\times(A_p)$	Axial specimen deformation* $\Delta L=(3)_i-(3)_1$	Volume tube change* $\Delta VT=(4)_i-(4)_1$	Converted volume tube change $\Delta VT_n=(13)\times(VT_f)$	System volume change due to applied lateral pressure $\Delta VC=C[10]-LTPR]\times SL\times Y$	Volume change due to piston movement $\Delta V_p=(12)\times(A_p)$	Volume change due to temperature change $\Delta TV=C(9)_i-(9)_1]\times(T_f)$	Total volume change $\Delta V=(14)+(15)-(16)+(17)$	Specimen volume $V_i=V_o+(18)$	Specimen length $L_i=L_o-(12)$	Axial strain $\epsilon=\frac{(12)}{L_o}\times 100$	Volume strain from initial $\epsilon_v=\frac{(18)-(10)}{V_o}\times 100$	Volume strain from start of shear ϵ_{vs} spec volume at start of shear $\times 100$	Effective lateral stress $\sigma 3=(10)-(6)$ ** (Minor effective principal stress)	Corrected specimen area $A_c=(19)/(20)$	Deviator stress $\sigma_d=(11)/(25)$	Effective axial stress $\sigma 1=(24)+(26)$ (Major effective principal stress)	$K_o=$ (24) / (27)	Poissons ratio $\mu=(28)/C1+(28)]$	Modulus of deformation $E_d=\frac{[1-2(29)]\,[(27)+2(24)]}{(22/100)}$
	(lbf/in²) kPa	(lbf) kN	(in) mm	(in) cm	(in³) cm³	(in³) cm³	(in³) cm³	(in³) cm³	(in³) cm³	(in³) cm³	(in) cm	%	%	%	(lbf/in²) kPa	(in²) cm²	(lbf/in²) kPa	(lbf/in²) kPa			(lbf/in²) kPa
	(10)	(11)	(12)	(13)	(14)	(15)	(16)	(17)	(18)	(19)	(20)	(21)	(22)	(23)	(24)	(25)	(26)	(27)	(28)	(29)	(30)
21	67.8	163.7	0.200	-8.00	-0.880	0.284	0.039	-0.005	-0.640	15.346	4.800	4.00	4.00	—	55.9	3.197	51.20	107.10	0.522	0.343	1718
22	69.8	171.3	0.210	-8.28	-0.911	0.287	0.041	-0.005	-0.670	15.316	4.790	4.20	4.19	—	56.8	3.197	53.58	110.38	0.515	0.340	1711
23	71.6	179.9	0.220	-8.57	-0.943	0.289	0.043	-0.005	-0.702	15.284	4.780	4.40	4.39	—	56.7	3.197	56.27	112.97	0.502	0.334	1712
24	76.7	185.9	0.230	-8.88	-0.977	0.297	0.045	-0.005	-0.730	15.256	4.770	4.60	4.57	—	61.2	3.198	58.13	119.33	0.513	0.339	1703
25	80.8	194.1	0.240	-9.18	-1.010	0.303	0.047	-0.005	-0.759	15.227	4.760	4.80	4.75	—	63.9	3.199	60.68	124.58	0.513	0.339	1711
26	85.8	199.1	0.250	-9.49	-1.044	0.311	0.049	-0.005	-0.787	15.199	4.750	5.00	4.92	—	67.3	3.200	62.22	129.52	0.520	0.342	1696
27	89.9	208.3	0.260	-9.79	-1.077	0.317	0.051	-0.005	-0.816	15.170	4.740	5.20	5.10	—	69.4	3.200	65.09	134.49	0.516	0.340	1715
28	92.9	218.8	0.270	-10.08	-1.109	0.321	0.053	-0.005	-0.846	15.140	4.730	5.40	5.29	—	70.6	3.201	68.35	138.95	0.508	0.337	1726
29	99.0	223.6	0.280	-10.40	-1.144	0.331	0.055	-0.005	-0.873	15.113	4.720	5.60	5.46	—	74.4	3.202	69.83	144.23	0.516	0.340	1717
30	105.8	232.2	0.290	-10.72	-1.179	0.341	0.057	-0.008	-0.903	15.083	4.710	5.80	5.65	—	78.3	3.202	72.52	150.82	0.519	0.342	1719
31	110.7	240.3	0.300	-11.03	-1.213	0.348	0.059	-0.008	-0.932	15.054	4.700	6.00	5.83	—	80.1	3.203	75.02	155.12	0.516	0.340	1731
32	116.9	248.0	0.310	-11.35	-1.249	0.353	0.061	-0.008	-0.965	15.021	4.690	6.20	6.04	—	83.2	3.203	77.43	160.63	0.518	0.341	1722
33	126.7	255.1	0.320	-11.70	-1.287	0.362	0.063	-0.008	-0.996	14.990	4.680	6.40	6.23	—	89.2	3.203	79.64	168.84	0.528	0.346	1717
34	137.4	262.0	0.330	-12.05	-1.326	0.372	0.065	-0.008	-1.027	14.959	4.670	6.60	6.42	—	95.1	3.203	81.80	176.90	0.538	0.350	1715
35	142.8	274.0	0.340	-12.40	-1.364	0.377	0.067	-0.008	-1.062	14.924	4.660	6.80	6.64	—	95.1	3.203	85.54	180.64	0.526	0.345	1731
36	157.6	287.0	0.350	-12.75	-1.403	0.390	0.069	-0.008	-1.090	14.896	4.650	7.00	6.82	—	104.6	3.203	89.60	194.20	0.539	0.350	1774
37	179.5	293.7	0.360	-13.20	-1.452	0.410	0.071	-0.008	-1.121	14.865	4.640	7.20	7.01	—	119.5	3.204	91.67	211.17	0.566	0.361	1785
38																					
39																					
40																					
41																					
42																					
43																					
44																					
45																					
46																					
47																					
48																					
49																					
50																					
51																					
52																					
53																					

GPO 859 020

*Subscript 1 denotes initial reading
Subscript i denotes any subsequent reading

**Bottom pore pressure shown; may use top pore pressure value (10) - (5) or average pore pressure, (10) - ([(5) + (6)] ÷ 2)

Figure 5. – K_o –test—data sheet 3a—Continued.

the chamber bottom plate. The water will exit through the base of the triaxial assembly and should be wiped up immediately.

14.11 Close valve G.

14.12 Attaching the saturated end plate with porous insert to the chamber bottom plate follows.

14.12.1 Place the bottom end plate with centering dowel into the centering hole in the center of the chamber bottom plate.

14.12.2 Open valve G slightly to allow a very small amount of water to flow from the drain tube through the fitting. With water flowing, attach the bottom end plate connecting tube to the chamber bottom plate.

14.12.3 Close valve G.

14.12.4 Open valve F slightly to allow a very small amount of water to flow from the drain tube through the fitting.

14.12.5 With water flowing, attach the top end plate connecting line to the chamber bottom plate.

14.12.6 Do not close valve F because this prevents cavitation of the system and keeps the top end plate porous insert moist.

14.13 Apply a small amount of silicon grease to the sides of the top and bottom end plates to aid in sealing the specimen membrane to the end plates.

14.14 Obtain a precut circular piece of No. 200 (75 mm) mesh screen. Spray the screen with a silicon mold release.

14.15 Place the screen on top of the bottom end plate. The purpose of the screen is to ensure a "break line" between the soil and the end plate so that pore air pressure is measured.

14.16 Placing and sealing the soil specimen on the end plates follows.

14.16.1 Obtain a specimen prepared in accordance with either USBR 5210 or 5215. At this point, the specimen should be enclosed in a membrane with caps on both ends with the membrane sealed to the caps with O-rings.

14.16.2 Remove the O-rings from both ends of the specimen.

14.16.3 Roll the membrane from the end cap on one end of the specimen and remove the end cap from that end of the specimen—either end unless otherwise specified.

14.16.4 Place the test specimen on the bottom end plate. Roll the membrane over the sides of the bottom end plate.

14.16.5 Place two O-rings, of appropriate size, on the bottom of the O-ring expander. Position the expander around the specimen with the bottom of the expander around the middle of the bottom end plate. Roll the O-rings into position around the end plate to seal the membrane.

14.16.6 Remove the expander from around the specimen.

14.16.7 Place two O-rings on the top end of the O-ring expander. Position the expander at approximately midheight of the test specimen with the top of the expander near the middle of the top end plate.

14.16.8 Remove the O-rings from the top end cap. Roll the membrane down from the top of the specimen and remove the end cap.

14.16.9 Blot any excess water from the surface of the porous insert in the top end plate and close valve F.

14.16.10 Carefully place the top end plate into position on top of the test specimen.

14.16.11 Roll the membrane up over the sides of the top end plate. Roll the O-rings from the expander onto the membrane so the membrane seals against the top end plate. Remove the expander from around the specimen.

NOTE 5.–The expander is split into halves and is hinged on one side to facilitate removal from around the specimen.

14.17 Ensure that the pore water pressure measuring system for the top end plate does not cavitate. The end plate control injector is to be used to maintain a water pressure not lower than about minus 8.0 lbf/in² (–55 kPa).

14.18 Lightly grease the upper and lower ends of the chamber.

14.19 Carefully place the chamber into position on the chamber bottom plate.

14.20 Attach a hose from the de-aired water source to the de-aired water source (valve N) line and begin filling the chamber through the chamber bottom plate with de-aired water. As water rises in the chamber, use a squeeze bulb to flush any air bubbles that may be present on the bottom and sides of the chamber and specimen.

14.21 Fill the chamber completely with de-aired water. Close valve N.

14.22 Open valve A and set the chamber cap in place. Force the chamber cap down onto the chamber until it is properly seated.

14.23 Open valve N and continue filling the chamber with de-aired water until water flows out of the chamber cap relief valve A. Close valve A and continue filling so that any air remaining in the system is forced up through the ball bushing.

14.24 When water flows out the ball bushing, close valve N.

14.25 Screw the chamber bolts into the chamber bottom plate and set the chamber cap hold down plate into place.

14.26 Secure the chamber cap to the chamber bottom plate by screwing the four nuts onto the four chamber bolts; tighten the nuts in a staggered sequence to about 50 ft-lbf torque.

14.27 Lightly grease the piston, open valve A, and carefully push the piston through the ball bushing in the center of the chamber cap until the piston tip fits into the socket in the top end plate. Check that the piston is firmly in contact with the end plate, but does not apply excessive pressure to the specimen (by feel). Close valve A.

14.28 Attach the axial deformation indicator (fig. 1) and adjust its range so that deformation of the test specimen can be recorded.

14.29 Open valves L and K to the differential pressure transducer.

14.30 Attach and secure the piston retainer bar. Be careful not to disturb the specimen. The purpose of the piston retainer bar is to prevent the piston from being forced out of the chamber when lateral pressure is applied inside the chamber.

14.31 Open valve A. Slowly open volume tube drain valve E until water flows out of chamber cap relief valve A. When the level of water in the volume tube has reached the desired level for starting the test—usually the 10-inch (250-mm) level—close valve A.

14.32 Make sure that the air pressure regulator is set on zero and attach the air pressure hose to the top of the volume tube. Carefully place the triaxial assembly in the compression test machine.

14.33 Align the load cell with the load transfer piston (fig. 1). Ensure that the load transfer piston is just in contact with the piston top plate. Level the load frame cross head and lock it into place.

14.34 Read and record:

- Initial applied lateral pressure
- Deviator load reading
- Axial specimen deformation reading
- Volume tube reading
- Top and bottom pore pressure readings
- Tube 1 and tube 2 drain tube readings
- Chamber fluid temperature
- Date

as shown on figure 4 (data sheet 2).

NOTE 6.–If the specimen is tested in an undrained condition, drain tube readings would not be required. Similarly, if tested in a drained mode, pore pressure readings would not be required.

14.35 Begin the test by applying axial load to the piston. (Consult the operator's manual for specific instructions on operation of the axial loading device.)

14.36 Adjust the lateral pressure as required to maintain zero lateral specimen strain by applying the theory and equations as explained in appendixes X5 and X6.

14.36.1 Lateral pressure adjustments should be made at 0.20 percent strain intervals to preclude the need for adjusting the lateral pressure in large increments. This also ensures that critical readings on the volume tube are closely monitored. Data collection intervals for different length specimens are shown in table 4. The required increase in lateral pressure is computed so that volume strain is equal to axial strain. Therefore, volume change or strain occurs only in the axial direction such that volume change per unit volume and length change per unit length are actually the same value.

Table 4. – Data collection intervals for various test specimen sizes.

Test specimen size				Data collection interval		
Diameter in	Height in	Diameter mm	Height mm	in	mm	% strain
2.0	5.0	50.8	127.0	0.010	0.254	0.20
2.8	7.0	71.1	177.8	.014	0.356	.20
6.0	15.0	152.4	381.0	.030	0.762	.20
9.0	22.5	228.6	571.5	.045	1.143	.20

14.37 It is recommended that the test be performed at an axial strain rate equal to about 0.04 percent per minute, as shown in table 5.

Table 5. – Recommended displacement and strain rate for various test specimen sizes.

Test specimen size				Displacement rate		Strain rate
Diameter in	Height in	Diameter mm	Height mm	in/min	mm/min	%
2.0	5.0	50.8	127.0	0.002	0.051	0.04
2.8	7.0	71.1	177.8	.003	.076	.04
6.0	15.0	152.4	381.0	.006	.152	.04
9.0	22.5	228.6	571.5	.009	.229	.04

14.38 As axial load is applied to the specimen, plot the values of pore air and pore water pressures as explained in appendix X4. Perform this operation in the same increments that data readings are taken.

14.39 Continue loading the specimen and adjusting the lateral pressure until the volume change is equal to the initial volume of air in the specimen or until lateral pressure capacity of the chamber or axial load capacity of the compression test machine is attained.

NOTE 7.–As complete saturation is approached in a specimen tested under sealed compression conditions, the lateral pressure necessary to prevent lateral deformation increases rapidly.

14.40 Stop the axial loading device.

14.41 Carefully release the lateral pressure and drain the water from the chamber. Disassemble the chamber and remove the specimen.

15. Calculations

15.1 The coefficient of earth pressure at rest K_o, Poisson's ratio, μ, and modulus of deformation E_d, are calculated at each pressure increment.

15.2 All calculations are based on data recorded on figure 3 (data sheet 1) and figure 4 (data sheets 2 and 2a). Perform all calculations as shown and record in the appropriate column.

15.2.1 Enter the following information on the heading of figure 5 (data sheet 3):

Sample No.,
Specimen No.,
Initial specimen volume (V_o) (from fig. 3, data sheet 1),
Initial specimen length (L_o) (from data sheet 1), and
Compute the initial specimen area, A_o, by dividing V_o by L_o.

15.2.2 *Applied lateral pressure* [fig. 5, col. (10)] is the applied lateral pressure from figure 4 [data sheet 2, col. (1)].

15.2.3 *Corrected deviator load* [col. (11)] is the deviator load corrected to account for upward force due to lateral pressure acting on the piston.

$$P_{dc} = P_d - (A_p\, \sigma^3) \quad (1)$$

where:
P_{dc} = corrected deviator load, lbf
P_d = deviator load, lbf
A_p = load piston area, in^2
σ^3 = applied lateral pressure, lbf/in^2

15.2.4 *Axial specimen deformation* [col. (12)] is calculated.

$$\Delta L = L_1 - L_i \quad (2)$$

where:
ΔL = axial specimen deformation (change in specimen length), in
L_1 = initial axial specimen deformation indicator reading, in
L_i = subsequent axial deformation indicator reading, in

15.2.5 *Volume tube change* [col. (13)] is the change in fluid level (linear units) in the volume tube.

$$\Delta VT = VT_1 - VT_i \quad (3)$$

where:
ΔVT = volume tube change, in
VT_1 = initial volume tube reading, in
VT_i = subsequent volume tube reading, in

15.2.6 *Converted volume tube change* [col. (14)] is the volume tube converted from linear units to volumetric units.

$$\Delta VT_n = (\Delta VT)\,(VT_f) \quad (4)$$

where:
ΔVT_n = converted volume tube change, in^3
ΔVT = volume tube change, in
VT_f = volume tube factor, in^3/in, from USBR 1455

15.2.7 *System volume change due to applied lateral pressure* [col. (15)] is the expansion or contraction of the

triaxial system (in cubic inches) due to a change in applied lateral pressure, (see fig. 6).

$$\Delta VC = [(\sigma^3 - LTPR_i)]\ (SL_i) + Y_i \quad (5)$$

where:

ΔVC = system volume change, in^3
σ^3 = applied lateral pressure, lbf/in^2
$LTPR_i$ = lateral pressure intercept for lateral pressure increment considered, lbf/in^2
SL_i = slope of line relating volume change to applied lateral pressure for pressure increment considered, in^3/(lbf/in^2)
Y_i = volume change intercept for lateral pressure increment considered, in^3

NOTE 8.– A curve for system volume change versus lateral pressure must be developed for each triaxial shear test system and is unique for that particular system (see fig. 6). This curve is developed when the triaxial shear test system is calibrated (USBR 1450).

15.2.8 *Volume change due to piston movement* [col. (16)] due to displacement of water by piston entry into the chamber.

$$\Delta VP = \Delta L\, A_p \quad (6)$$

where:

ΔVP = volume change due to piston movement, in^3
ΔL = change in specimen length, in
A_p = load piston area, in^2

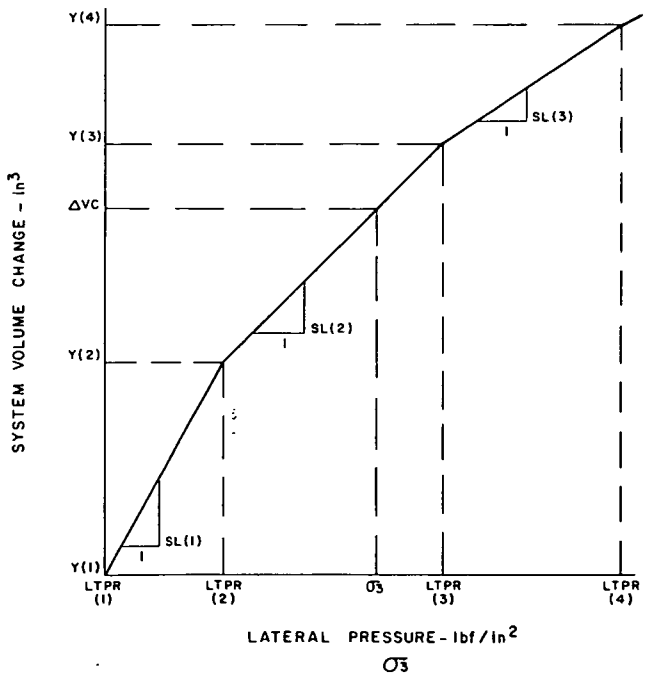

Figure 6. – Volume change of system due to applied lateral pressure.

15.2.9 *Volume change due to temperature change* [col. (17)] is the change of the confining fluid in the cell due to temperature change.

$$\Delta TV = T_f\,(T_1 - T_i) \quad (7)$$

where:

ΔTV = volume change due to temperature change, in^3
T_f = temperature correction coefficient, in^3/°F
T_1 = initial temperature reading of water in chamber, °F
T_i = subsequnt temperature reading of water in chamber, °F

See appendix X1 for derivation of the temperature correction coefficient.

15.2.10 *Total volume change* [col. (18)] is calculated.

$$\Delta V = \Delta VT_n + \Delta VC - \Delta VP + \Delta TV \quad (8)$$

where:

ΔV = total volume change, in^3
ΔVT_n = converted volume tube change, in^3
ΔVC = system volume change due to applied lateral pressure, in^3
ΔVP = volume change due to piston movement, in^3
ΔTV = volume change due to temperature change, in^3

15.2.11 *Specimen volume* [col. (19)] is the volume of the specimen at any subsequent point during the test.

$$V_i = V_o + \Delta V \quad (9)$$

where:

V_i = subsequent specimen volume in^3
V_o = initial specimen volume in^3
ΔV = total volume change, in^3

15.2.12 *Specimen length* [col. (20)] is the length of the specimen at any subsequent point during the test.

$$L_i = L_o - \Delta L \quad (10)$$

where:

L_i = susequent specimen length, in
L_o = initial specimen length, in
ΔL = axial specimen deformation (change in specimen length), in

15.2.13 *Axial strain* [col. (21)] at any given point in the test is calculated.

$$\epsilon = 100 \left(\frac{\Delta L}{L_o} \right) \quad (11)$$

where:

ϵ = axial strain, %
ΔL = axial specimen deformtion (change in specimen length), in
L_o = specimen length initial reading, in
100 = convert from decimal to percent

15.2.14 *Volume strain from initial*, ϵ_v [col. (22)] is the volumetric strain in percent of the initial specimen volume.

$$\epsilon_v = 100 \left[\frac{\Delta V\,(-1.0)}{V_o} \right] \quad (12)$$

where:
ϵ_v = volume strain from initial, %
ΔV = total volume change, in³
−1.0 = constant to establish sign convention where positive values indicate compression and negative values indicate expansion
V_o = initial specimen volume, in³
100 = convert from decimal to percent

15.2.15 *Volume strain from start of shear*, ϵ_{vs} [col. (23)] normally is not used for the K_o test; however, if the K_o test was performed on a specimen that consolidated prior to application of deviator load, this parameter would be calculated as:

$$\epsilon_{vs} = 100 \left[\frac{(V_i - V_{is})\,(-1.0)}{V_{is}} \right] \quad (13)$$

where:
ϵ_{vs} = volume strain from start of shear, %
V_i = specimen volume at subsequent reading, in³
V_{is} = specimen volume at start of shear, in³
−1.0 = constant to establish the sign convention where positive values indicate compression and negative values indicate expansion
100 = convert from decimal to percent

15.2.16 *Effective lateral stress* [col. (24)] is calculated.

$$\sigma_3' = \sigma_3 - u \quad (14)$$

where:
σ_3' = effective lateral stress (minor principal stress), lbf/in²
σ_3 = applied lateral pressure, lbf/in²
u = pore pressure, either top (u_w) or bottom (u_a) pore pressures may be used or an average of the two depending on the situation, lbf/in²

15.2.17 *Corrected specimen area* [col. (25)] is calculated.

$$A_c = \frac{V_i}{L_i} \quad (15)$$

where:
A_c = corrected specimen area, in²
V_i = specimen volume at a subsequent reading, in³
L_i = specimen length at the same subsequent reading, in

15.2.18 *Deviator stress*, σ_d [col. (26)] is calculated.

$$\sigma_d = \frac{P_{dc}}{A_c} \quad (16)$$

where:
σ_d = deviator stress, lbf/in²
P_{dc} = corrected deviator load at a given reading, lbf
A_c = corrected specimen area at the same given reading, in²

15.2.19 *Effective axial stress* [col. (27)] is calculated.

$$\sigma_1' = \sigma_3' + \sigma_d \quad (17)$$

where:
σ_1' = effective axial stress (major effective principal stress), lbf/in²
σ_3' = effective lateral stress (minor effective principal stress), lbf/in²
σ_d = deviator stress, lbf/in²

15.2.20 *Coefficient of earth pressure at rest*, K_o [col. (28)] is determined.

$$K_o = \frac{\sigma_3'}{\sigma_1'} \quad (18)$$

where:
K_o = lateral earth pressure coefficient
σ_3' = effective lateral stress, lbf/in²
σ_1' = effective axial stress, lbf/in²

15.2.21 *Poisson's ratio*, μ [col. (29)] is computed.

$$\mu = \frac{K_o}{1 + K_o} \quad (19)$$

where:
μ = Poisson's ratio
K_o = lateral earth pressure coefficient
1 = unity

15.2.22 *Modulus of deformation*, E_d [col. (30)] is computed.

$$E_d = \frac{(1 - 2\mu)\,(\sigma_1' + 2\sigma_3')}{\epsilon_v/100} \quad (20)$$

where:
E_d = modulus of deformation, lbf/in²
μ = Poisson's ratio
σ_1' = effective axial stress, lbf/in²
σ_3' = effective lateral stress, lbf/in²
1 = interger
2 = interger
100 = convert from percent to decimal
ϵ_v = volumetric strain, %

16. Report

16.1 The report is to consist of the following completed and checked forms:
"Specimen Placement—Data Sheet 1" (fig. 3).
"Triaxial Shear Test—Data Sheet 2" (fig. 4).
"K_o Test—Data Sheet 3" (fig. 5).
16.2 Data plots as shown on figure 7.
16.3 All calculations are to show a checkmark and all plotting must be checked.

17. Reference

[1] Jaky, J., *Earth Pressure in Silos*, Proceedings: Second International Conference on Soil Mechanics and Foundation Engineering, Rotterdam, vol. I, pp. 103-107, 1948.

17.1 *Background Reference*:
Knodel, P. C., *Triaxial Shear Test With Zero Lateral Strain (K_o-Test)*, Bureau of Reclamation Report No. REC-ERC-71-27, 9 pp., Denver, Colorado, May 1971.

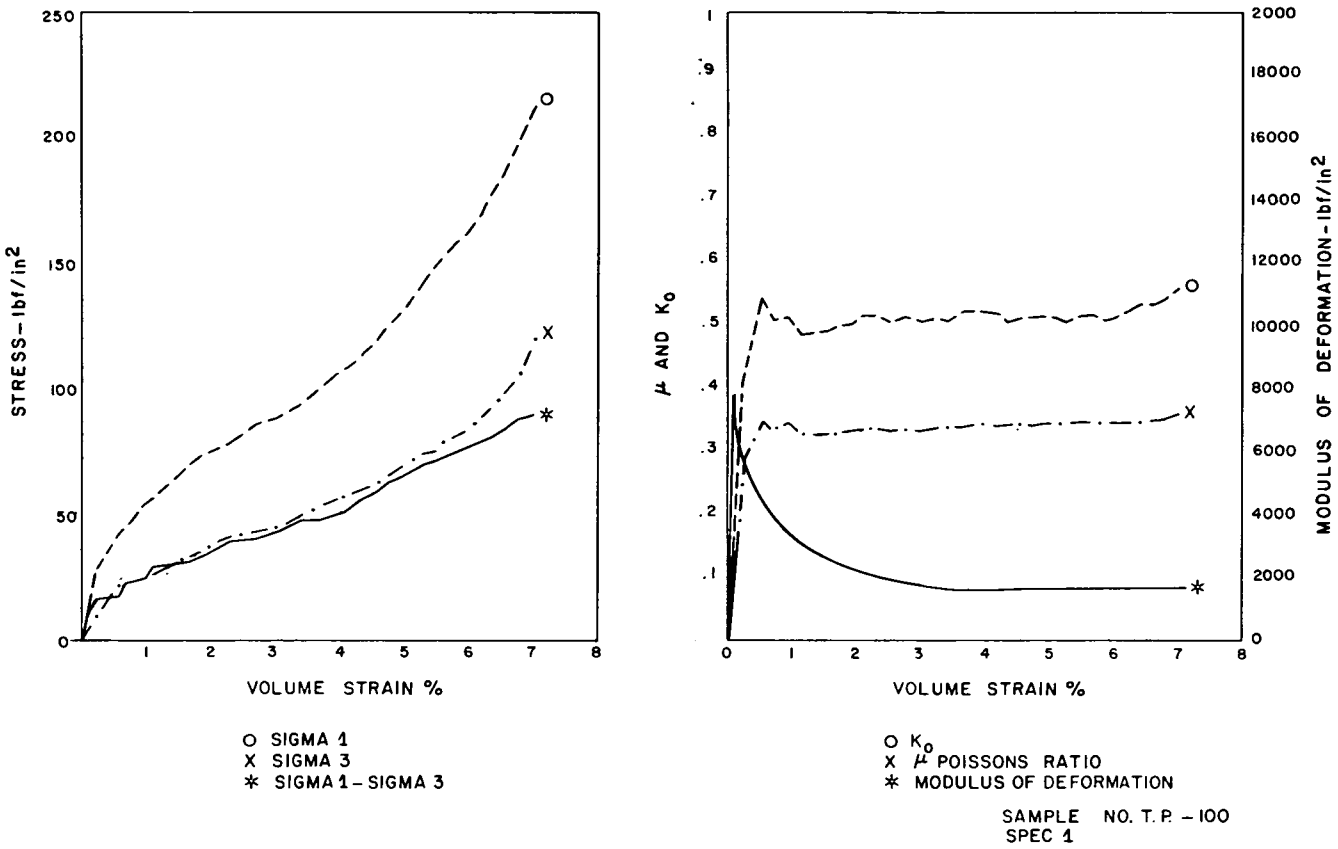

Figure 7. – K_o -test data plots—example.

APPENDIX

X1. DETERMINING THE TEMPERATURE CORRECTION COEFFICIENT FOR WATER-FILLED TRIAXIAL ASSEMBLY

X1.1 Scope

X1.1.1 When performing triaxial shear tests, there are occasions when changes in ambient temperature can occur. These ambient temperature changes can affect the volume of the water used for monitoring volume change of the specimen during testing. This appendix presents a method for determining a temperature correction coefficient for computing correct specimen volume.

X1.2 Summary of Method

X1.2.1 A triaxial assembly is de-aired and filled with de-aired water. A thermometer or thermocouple is inserted into the water in the chamber. The triaxial assembly is placed in a location where the ambient temperature can be varied from approximately 65 to 75 °F. The ambient temperature is allowed to drop slowly to the lower limit of the ambient temperature range over a period of 8 to 12 hours. Then, the assembly is relocated into an environment where the ambient temperature will cause the temperature of the triaxial assembly to increase approximately 10 to 15 °F over a period of 6 to 8 hours. The temperature of the water in the triaxial assembly is measured and recorded to the nearest 0.1 °F and the water level in the volume tube is read and recorded to 0.01 inch. The data are used to compute the temperature correction coefficient for the assembly in cubic inch per degree Farenheit (cubic centimeter per degree Celsius).

NOTE X1.1–When determining this coefficient, the top and bottom end plates are removed from the triaxial assembly since no specimen is placed in the chamber. Pipe plugs are screwed into the chamber bottom plate where the top and bottom end plate lines had been attached.

NOTE X1.2–It is recommended that three trials be performed on an assembly to determine an average temperature correction coefficient. Since the volume of water in an assembly is one of the independent variables in determining the coefficient, the volume of water in an assembly should not be changed during the trials and a temperature correction coefficient should be determined for each different size triaxial assembly.

X1.3 Preparation of Apparatus

X1.3.1 De-airing the triaxial assembly (fig. 1):

X1.3.1.1 Place the chamber into the groove in the bottom plate.

X1.3.1.2 Verify that all the valves in the system are closed.

X1.3.1.3 Fill the chamber about one-half full with de-aired water.

X1.3.1.4 Open triaxial chamber cap relief valve A.

X1.3.1.5 Set the chamber cap in place, and force the cap down onto the chamber until it is properly seated.

X1.3.1.6 Insert the piston through the ball bushing until the piston flange is resting on top of the chamber cap.

X1.3.1.7 Open valve B to the top of the volume tube.

X1.3.1.8 Attach vacuum hoses to valve B on top of the volume tube and to the fitting on the chamber cap relief valve A.

X1.3.1.9 Attach the other ends of the vacuum hoses to a multiport manifold on the vacuum pump. Turn on the vacuum pump.

X1.3.1.10 Apply a vacuum of about 20 lbf/in² (140 kPa) for 5 minutes.

X1.3.1.11 Release the vacuum from the chamber (at valve A) by uncoupling the vacuum line at the vacuum pump. Maintain the vacuum on the volume tube.

X1.3.1.12 Open volume tube drain valve E and volume tube isolation valve R, and fill the volume tube to the top of its marking with de-aired water from the chamber (vacuum is still on the volume tube).

X1.3.1.13 Close volume tube drain valve E.

X1.3.1.14 Release the vacuum from the volume tube by uncoupling the appropriate vacuum line at the vacuum pump.

X1.3.1.15 Plug the vacuum hose that attaches to the chamber at relief valve A into the vacuum source.

X1.3.1.16 Open valve E and allow the water level in the volume tube to drop to about the 25-inch (635-mm) level.

X1.3.1.17 Close volume tube drain valve E.

X1.3.1.18 Reattach the vacuum hose to the top of the volume tube. Uncouple the vacuum hose to valve A.

X1.3.1.19 Displace water back and forth between the volume tube and the chamber by repeating subparagraphs X1.3.1.12 through X1.3.1.18 until air bubbles can not be seen in the volume tube.

X1.3.1.20 If the volume tube is not full at the end of the flushing phase, fill the tube by opening valve E. Fill the volume tube to about the 5-inch level with de-aired water, so that it can be drained to the desired level for the coefficient determination. Close valves A and E.

X1.3.1.21 Uncouple all the vacuum lines from the manifold on the vacuum pump and shut off the vacuum pump.

X1.3.1.22 Uncouple the vacuum line from valves A and B. Coil the vacuum lines up and store them in a suitable location for future use.

X1.3.1.23 Do not drain the water from the chamber at this time.

X1.3.2 De-airing the differential pressure transducer.

X1.3.2.1 Fill the flushing tank on the differential pressure transducer about two-thirds full with de-aired water. Close the volume tube isolation valve R to isolate the volume tube and differential pressure transducer from the chamber.

X1.3.2.2 Open valve L on the differential pressure transducer. Remove the bottom plate on the differential pressure transducer by unscrewing the four cap head screws which hold the bottom plate to the body of the transducer. Fill the bottom plate with de-aired water. Open valve M and fill the bottom plate with de-aired water from the flushing tank. Open valves E and K to the volume tube and allow water to flood over the exposed capsule located under the main body of the differential transducer. With water flowing, place the bottom plate back on the differential pressure transducer, being careful not to entrap air. Close valve K but leave valve M to the flushing tank slightly open to relieve any pressure which results from tightening the cap screws. Tighten the four cap head screws.

X1.3.2.3 Flush the differential pressure transducer thoroughly by attaching a hand-held vacuum/pressure pump to the top of the flushing tank. Open valves K and M and flush water back and forth several times from the flushing tank to the volume tube through the differential transducer. When this step is complete be sure that the water level in the volume tube is near the full mark and close valve M. Open the volume tube isolation valve R.

NOTE X1.3–Extreme caution must be used when flushing the differential pressure transducer system since a pressure greater than about 10 lbf/in^2 (70 kPa) can damage the measuring capsule inside the transducer.

X1.4 Procedure

X1.4.1 All data are to be recorded on the "Temperature Correction Coefficient" form as shown on figure X1.1.

X1.4.2 Record all identifying information pertaining to the triaxial assembly on the form.

X1.4.3 Connect a hose to valve N; place the other end of the hose in an empty container or into a drain.

X1.4.4 Drain about one quarter to one-third of the water from the chamber by opening valve N. Close valves A and N.

X1.4.5 Remove the piston and the chamber cap from the chamber.

X1.4.6 Verify that volume tube valve B is open.

X1.4.7 Verify that all remaining valves to the chamber are closed.

X1.4.8 Attach a hose from the de-aired water source to the de-aired water source line. Open valve N and begin filling the chamber through the chamber bottom plate with de-aired water. As water rises in the chamber, use a squeeze bulb to flush any air bubbles that may be present on the bottom and sides of the chamber.

X1.4.9 Fill the chamber completely with de-aired water. Close valve N.

X1.4.10 Remove relief valve A by unscrewing it from the chamber cap.

X1.4.11 Set the chamber cap in place. Force the chamber cap down onto the chamber until it is properly seated.

X1.4.12 Open valve N and continue filling the chamber with de-aired water until water flows out of the hole left by removal of relief valve A. Close valve N.

X1.4.13 Insert a thermocouple or thermometer to about midheight in the chamber through the hole left by removal of valve A.

X1.4.14 Using modeling clay or silicon sealant, seal the opening between the thermocouple or thermometer and the hole in the cap.

X1.4.15 Open valve N and continue filling the chamber until water flows out the top of the ball bushing. Close valve N. Disconnect the de-aired water source line from valve N. Reattach the drain line to valve N.

X1.4.16 Screw the chamber bolts into the chamber bottom plate; set the chamber cap hold down plate into place.

X1.4.17 Secure the chamber cap to the chamber bottom plate by screwing the four nuts onto the four chamber bolts; tighten the nuts in a staggered sequence to about 50 ft-lbf torque.

X1.4.18 Tape a 0.5-inch diameter by 3-inch-long wooden dowel to the side of the piston nearest the piston retainer bar. Since there is not a specimen inside the chamber, the dowel keeps piston intrusion at about the same level it would be when a specimen is in the chamber.

X1.4.19 Lightly grease the piston. Open valve E. Carefully push the piston through the ball bushing in the chamber cap until the wooden dowel comes in contact with the top of the chamber cap. If the water displaced by the piston overtops the volume tube, drain the excess water by opening valve N. Close valve N.

X1.4.20 Open valves L and K to the differential pressure transducer.

X1.4.21 Attach and secure the piston retainer.

X1.4.22 Open volume tube drain valve E. Slowly open valve N to allow water to drain from the volume tube. When the level of water in the volume tube has reached the desired level for starting the test—usually the 10-inch level—close valve N.

X1.4.23 Place the triaxial assembly in an environment where an ambient temperature of 60 to 65 °F (16 to 18 °C) can be maintained for 8 to 12 hours.

X1.4.24 When the temperature of the triaxial assembly has stabilized, read and record chamber water temperature and volume tube height. Move the triaxial assembly to an environment where the ambient temperature will cause a water temperature rise of 10 to 15 °F over a period of 6 to 8 hours.

X1.4.25 Read and record water temperature to the nearest 0.1 °F and volume tube height to the nearest 0.01 inch. These readings should be taken at about 1-hour intervals until chamber water temperature stabilizes.

X1.4.26 This constitutes one trial. Repeat subparagraphs X1.4.23 through X1.4.25 if additional trials are required.

X1.4.27 Compute the temperature correction coefficient for each trial. Determine the average system temperature correction coefficient if required.

X1.5 Calculations

X1.5.1 Perform all calculations on the "Temperature Correction Coefficient" form as shown on figure X1.1.

7-2368 (10-86) Bureau of Reclamation	TEMPERATURE CORRECTION COEFFICIENT-DATA SHEET	Designation USBR ____-__

PROJECT	FEATURE
Example	Example

TESTED BY	DATE	COMPUTED BY	DATE	CHECKED BY	DATE

Triaxial Assembly No. 29 (a) Volume tube factor, VT_f 0.110 ☒ in^3/in ☐ cm^3/cm

*Subscript 1 denotes initial reading
Subscript i denotes any subsequent reading

	DATE	TIME	Volume tube reading	Volume tube change $(3_i)-(3_1)$*	Converted Volume tube change (4)x(a)	Temperature	Temperature change
			in ☒ cm ☐	in ☒ cm ☐	in^3☒ cm^3☐	F°☒ C°☐	F°☒ C°☐
	(1)	(2)	(3)	(4)	(5)	(6)	(7)
1	9/16	6:34	10.00	—	0.00	66.2	0.0
2		7:30	9.84	0.16	0.018	67.8	1.6
3		8:50	9.51	0.49	0.054	70.7	4.5
4		9:30	9.45	0.55	0.061	71.6	5.4
5		10:30	9.23	0.77	0.085	73.2	7.0
6		11:38	9.09	0.91	0.100	75.0	8.8
7		12:35	9.05	0.95	0.105	75.7	9.5
8		13:30	8.91	1.09	0.120	76.6	10.4
9							
10							
11							
12							
13							
14							
15							
16							
17							
18							
19							
20							

REMARKS: System designed for 2x5 inch specimens. No endplates or specimen in chamber during this test. One trial only.

GPO 852 - 186

Figure X1.1. – Temperature correction coefficient—data sheet—example.

X1.5.2 *Volume Tube Factor, VT_f.*–Enter the volume tube factor in the space provided on figure X1.1.

X1.5.3 *Data Record.*–As readings are observed, record the following data: date (col. 1), time (col. 2), volume tube reading (col. 3), and temperature (col. 6).

X1.5.4 *Volume Tube Change* (col. 4).– The change in fluid level (col. 4) in the volume tube is calculated.

$$\Delta VT = VT_1 - VT_i \qquad \text{(X1-1)}$$

where:
ΔVT = volume tube change, in
VT_1 = initial volume tube reading, in
VT_i = subsequent volume tube reading, in

X1.5.5 The volume tube readings are converted (col. 5) from linear to volumetric readings.

$$\Delta VT_n = \Delta VT\ (VT_f) \qquad \text{(X1-2)}$$

where:
ΔVT_n = converted volume tube change, in^3
ΔVT = volume tube change, in
VT_f = volume tube factor, in^3/in

X1.5.6 The change in chamber water temperature (col. 7)is computed.

$$\Delta T = T_1 - T_i \qquad \text{(X1-3)}$$

where:
ΔT = temperature change, °F
T_1 = initial stabilized water temperature reading, °F
T_i = subsequent temperature water reading, °F

X1.5.7 The temperature correction coefficient is a constant which relates chamber water temperature change to system volume change and may be expressed as:

$$T_f = \frac{\Delta VT_n}{\Delta T} \qquad \text{(X1-4)}$$

where T_f equals temperature correction coefficient, in^3/°F. The temperature correction coefficient is the slope of the straight line relating ΔVT_n to ΔT and is assumed to pass through the origin. The line may be established from a visual best-fit straight line through the data points as shown on figure X1.2 or it may be determined using linear regression analyses. If three trials are performed, an average coefficient for the triaxial shear test system should be determined using all data collected for the individual trials.

NOTE X1.4.–The temperature correction coefficient is usually expressed in terms of cubic inch per degree Fahrenheit. However, it may be expressed in terms of cubic inch per degree Celcius, cubic centimeter per degree Fahrenheit, or cubic centimeter per degree Celcius.

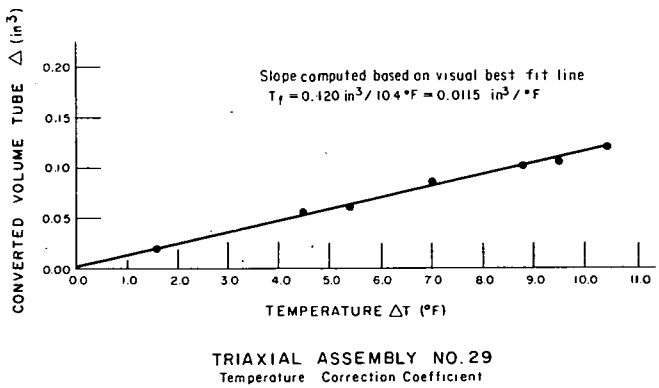

Figure X1.2. – Temperature correction coefficient plot—example.

X2. MEMBRANE CORRECTION

X2.1 Correction for Effect of Specimen Membrane

X2.1.1 The following equation, from ASTM D 1850, may be used to correct compressive soil strength for the effect of the specimen membrane if the error in deviator stress due to strength of the membrane exceeds 5 percent.

$$\Delta(\sigma_1 - \sigma_3) = \frac{4M\epsilon\ (1 - \epsilon)}{D_o} \qquad \text{(X2-1)}$$

where:
$\Delta(\sigma_1 - \sigma_3)$ = the correction to be subtracted from the measured compressive strength, lbf/in^2
D_o = initial diameter of specimen, in
M = compression modulus of the membrane, lbf/in
ϵ = specimen axial strain, expressed as a decimal

X2.2 Compression Modulus of the Membrane, *M*

X2.2.1 The compression modulus of the membrane may be determined by hanging a 0.5-inch length of membrane over a thin rod, placing another rod along the bottom of the hanging membrane and measuring the force per unit strain by stretching the membrane. In tests of very soft soils, the membrane effect may be significant; however, for most soils the membrane correction is insignificant and can be ignored.

X3. PORE PRESSURE CONSIDERATIONS

X3.1 Introduction

X3.1.1 Effective stress analysis involves evaluation of pore pressure in triaxial shear testing. In partially saturated soils this analysis may be based on pore air pressure and the theoretical relationship with volume change according to Boyle's Law for compression of air, combined with Henry's Law for air solubility in water. More recently, consideration has been given to capillary (suction) pressures in partially saturated soils. Research on measurement of these pore pressure effects was performed by the Bureau of Reclamation and a workable procedure was developed by Gibbs and Coffey [1]. Measurement of capillary stress in this testing procedure and in USBR 5735 includes all of the forces that affect soil suction. Capillary stress causes pore water pressure to be different than pore air pressure. Therefore, if effective stress is analyzed on the basis of deducting pore air pressure from applied stress, strength is evaluated at the void ratio and degree of saturation of the soil test specimen which represents a significant condition of the structure being investigated, such as the compacted condition of an embankment or the in-place condition of a foundation. The strength so evaluated should include effects of capillary pressure. However, if stress is analyzed on the basis of pore water pressure being deducted from applied stress, the result would be a basic interpretation of strength that would not include capillary pressure as effective stress. It is believed there is a distinct relationship between pore pressure and volume change which the observed data of a compression test should follow if pore pressure is initially equalized throughout the test specimen. During tests on undrained (sealed) specimens, it is believed that pore pressure regains equalization quite rapidly because there is not a major flow of fluid within the test specimen. Thus, for practical testing procedures, this means that sealed tests may be performed in a short time—such as a normal workday—and end plates may be used for measuring pore pressure during testing.

X3.2 Pore Pressure Analysis

X3.2.1 In a sealed unsaturated specimen, the voids contain water and air. The air can develop pressure, u_a, as it compresses and likewise the water will develop pressure, u_w, as load is applied. However, the water pressure is always lower (see fig. X4.1 and equation X3-1) and may even be negative as a result of capillary suction on the water films in the small soil pores. The fluid pressures must be in equilibrium or there will be fluid migration until they are in equilibrium; that is:

$$u_c = -(u_a - u_w) \qquad \text{(X3-1)}$$

where:

u_c = capillary stress, the portion of fluid pressure that assimilates capillary stress and is always negative; however, it approaches zero as compression increases enough to cause saturation, lbf/in²

u_a = pore air pressure, lbf/in²

u_w = pore water pressure, lbf/in²

X3.2.2 Theoretical evaluation of pore air pressure, u_a, as shown by Hamilton [2], considers the air volume to be the volume of free air plus dissolved air according to Henry's Law. Then, using the principle of Boyle's Law at constant temperature:

$$P_a\,(V_{ao} + hV_w) = (P_a + u_a)\,(V_{ac} + hV_w) \qquad \text{(X3-2)}$$

and solving for u_a

$$u_a = P_a \frac{(V_{ao} + hV_w)}{(V_{ac} + hV_w)} - 1 \qquad \text{(X3-3)}$$

where:

P_a = atmospheric pressure, lbf/in²

h = 0.02, coefficient of air solubility in water by volume according to Henry's Law

V_{ao} = initial volume of free air in percent of initial volume, %

V_{ac} = final volume of free air in percent of initial volume, %

V_w = volume of water in percent of initial volume, %

X3.3 Pore Air Pressure

X3.3.1 A more convenient form of this equation suggested by Hilf [3] uses percent volume change, ΔV. It is equal to $(V_{ao} - V_{ac})$, thus

$$u_a = \frac{P_a\,\Delta V}{V_{ao} + hV_w - \Delta V} \qquad \text{(X3-4)}$$

An example calculation of theoretical pore air pressure, u_a, is given on figure X4.1.

X3.4 Pore Pressure Curves

X3.4.1 To fully establish the theoretical pore pressure curves—as shown on figure X4.2—the following steps are taken.

X3.4.2 The initial capillary stress (negative pore pressure), u_c, is determined for the test specimen by performing USBR 5375 which does not damage or disturb the specimen for later shear testing.

X3.4.3 The shape of the u_c curve can be estimated as shown on figure X4.2. It can be either asymptotic to zero (as shown) or can be a straight line.

X3.4.4 The theoretical pore air pressure line, u_a, is computed using equation X3-4 as shown on the "Pore Air Pressure Computation" sheet (see fig. X4.1).

X3.4.5 The theoretical pore water pressure line, u_w, is computed using equation X3-1: $u_w = u_a + u_c$.

X3.4.6 These theoretical curves are used to analyze observed data and to control the rate of testing in triaxial shear.

X3.5 References

[1] Gibbs, H. J., and Coffey, C. T., "Techniques for Pore Pressure Measurements and Shear Testing of Soil," *Proceedings*: Seventh International Conference on Soil Mechanics and Foundation Engineering, Mexico, vol. 1, 1969, p. 151. (Also published as "Application of Pore Pressure Measurments to Shear Strength of Cohesive Soils," Bureau of Reclamation Report No. E.M.-761, Denver, Colorado, June 1969).

[2] Hamilton, L. W., "The Effect of Internal Hydrostatic Pressure on the Shearing Strength of Soils," *Proceedings*: ASTM, vol 39, pp. 1-100, 1939.

[3] Hilf, J. W., "An Investigation of Pore Water Pressure in Compacted Cohesive Soils" (Doctoral Thesis University of Colorado), Technical Memorandum No. 654, Bureau of Reclamation, Denver, Colorado, October 1956.

X4. DETERMINING AND PLOTTING PORE AIR, PORE WATER, AND CAPILLARY PRESSURES

X4.1 Scope

X4.1.1 When performing the UU (unconsolidated-undrained) triaxial shear test and the K_o test, on partially saturated soils in the UU-mode, the pore air, u_a, and pore water, u_w, pressures must be measured if effective stresses are to be computed. This appendix discusses necessary calculations and data plots.

X4.2 Procedure

X4.2.1 Determine the capillary pressure, u_c, of the specimen using the method outlined in USBR 5735. From the dry unit weight, moisture content, and apparent specific gravity of soil, theoretical values of pore water pressure, u_w, and pore air pressure, u_a, may be computed using the following equations.

$$V_s = \frac{\gamma_d}{G\gamma_w} \qquad \text{(X4-1)}$$

where:
V_s = volume of solids, expressed as a decimal
γ_d = dry unit weight of the specimen, lbf/ft³
G = apparent specific gravity of the soil
γ_w = absolute unit weight of water (at 4 °C) (62.43 lbf/ft³)

$$V_w = \frac{\gamma_d \left(\frac{w}{100}\right)}{\gamma_w} \qquad \text{(X4-2)}$$

where:
V_w = volume of water, expressed as a decimal
w = moisture content of specimen, %
γ_d = dry unit weight of specimen, lbf/ft³
γ_w = unit weight of water at 70 °F, (21.1 °C), assume normal room temperature, 62.29 lbf/ft³
100 = convert from percent to decimal

$$V_a = 1.00 - V_s - V_w \qquad \text{(X4-3)}$$

where:
V_a = volume of air, expressed as a decimal
V_s = volume of solids, expressed as a decimal
V_w = volume of water, expressed as a decimal
1.00 = unity

$$V_{as} = hV_w = 0.02\ V_w \qquad \text{(X4-4)}$$

where:
V_{as} = total volume of air in solution, expressed as a decimal
h = 0.02 coefficient of air solubility in water by volume according to Henry's law
V_w = volume of water, expressed as a decimal

$$u_s = \frac{P_a\ V_a}{V_{as}} \qquad \text{(X4-5)}$$

where:
u_s = pore pressure at the point where complete saturation of the specimen occurs, lbf/in²
P_a = average annual atmospheric pressure corrected for altitude (12.0 lbf/in² in Denver, Colorado)
V_a = volume of air, expressed as a decimal
V_{as} = volume of air in solution according to Henry's law, expressed as a decimal

$$u_a = \frac{P_a \left(\frac{\Delta V}{100}\right)}{V_a + V_{as} - \left(\frac{\Delta V}{100}\right)} \qquad \text{(X4-6)}$$

where:
u_a = pore air pressure, lbf/in²
P_a = average annual atmospheric pressure, corrected for altitude (12.0 lbf/in² in Denver, Colorado)
V_a = volume of free air, expressed as a decimal
ΔV = volume change of specimen, %
V_{as} = total volume of air in solution, expressed as a decimal
100 = convert from percent to decimal

X4.2.2 Compute u_a of the specimen using the form as shown on figure X4.1.

X4.2.3 Prepare a plot as shown on figure X4.2.

X4.2.4 Plot computed pore air pressure, u_a, (col 4) versus volume change (in percent), ΔV, (col. 1) and connect the data points.

X4.2.5 Obtain the computed value of V_a (volume of air) computed on figure X4.1. Multiply the value of V_a by 100 to convert to percent volume of air and plot this value on the graph and draw a vertical line from zero pore pressure to the top of the graph. This is labeled the "Saturation Line."

NOTE X4.1.–When performing this test, measured volume change of the specimen should not plot beyond the "Saturation Line" since the solids and water in the specimen are not normally compressible at the pressures used for testing in the laboratory.

X4.2.6 Plot the maximum value of u_c (–17.0 lbf/in² on fig. X4.2). Plot another point at the intersection of the saturation line and the zero pore pressure axis. Connect the two points by drawing a curved line between them. Experience has shown this method to be sufficiently accurate for most soils. However, specialized testing can be performed with a "floating ring" device in which data points are obtained for the u_c curve.

X4.2.7 Select u_c values from the graph for corresponding volume change values and enter them on the figure X4.1 form (col. 5).

X4.2.8 Compute values of u_w (col. 6) for the corresponding volume changes.

$$u_w = u_c + u_a \qquad \text{(X4-7)}$$

where:
u_w = pore water pressure, lbf/in²
u_c = capillary pressure, lbf/in²
u_a = pore air pressure, lbf/in²

7-2369 (10-86) Bureau of Reclamation	PORE AIR PRESSURE COMPUTATION SHEET		Designation USBR ____-__
SAMPLE NO. TP-100	SPECIMEN NO. 1	PROJECT Example	FEATURE Example
TESTED BY DATE	COMPUTED BY DATE	CHECKED BY DATE	

The following are definitions for the symbols used below:

V_s = Volume of soil expressed as a decimal

V_w = Volume of water expressed as a decimal

V_a = Volume of air expressed as a decimal

U_s = Pore air pressure at saturation (U_a)

h = The coefficient of air solubility in water by volume according to Henry's Law

$V_{as} = hV_w$ = Volume of Air in solution

γ_d = Dry unit weight of the specimen in lbf/ft^3

γ_w = Unit weight of water at 4°C (62.43 lbf/ft^3)

γ_{wt} = Unit weight of water at 22.0°C (62.29 lbf/ft^3)

G = Specific gravity of the soil.

P_a = 12.0 lbf/ft^3 = Averge barometic pressure corrected for altitude at Denver, Co.

U_c at 0% ΔV = _____ lbf/in^2

$V_s = \frac{\gamma_d}{G\gamma_w} = \frac{(116.2)}{(2.70)(62.43)} = 0.689$ $\quad V_w = \frac{(w/100)\gamma_d}{\gamma_{wt}} = \frac{(0.1150)(116.2)}{62.29} = 0.215$

$V_a = 1.0 - V_s - V_w = 0.096$ $\quad V_{as} = hV_w = (0.02)(0.215) = 0.004$

$V_a + V_{as} = 0.100$ $\quad U_s = \frac{P_a V_a}{V_{as}} = \frac{12.0\,(0.096)}{(0.004)} = 288$

(1) Volume change (ΔV) percent	(2) 12.0 (ΔV/100)	(3) $V_a + V_{as}$ − (ΔV/100)	(4) Pore Air Pressure (U_a) lbf/in^2 (2) ÷ (3)	(5) Capillary Pressure (U_c) lbf/in^2 (graph)	(6) Pore Water Pressure (U_w) lbf/in^2 (5) + (4)
0.0	0.00	0.100	0.0	-17.0	-17.0
0.5	0.060	0.095	0.63	-15.0	-14.4
1.0	0.120	0.090	1.33	-13.0	-11.7
2.0	0.240	0.080	3.00	-10.0	-7.0
3.0	0.360	0.070	5.14	-7.5	-2.4
4.0	0.480	0.060	8.00	-5.0	3.0
5.0	0.600	0.050	12.0	-3.5	8.5
6.0	0.720	0.040	18.0	-2.0	16.0
7.0	0.840	0.030	28.0	-1.0	27.0
8.0	0.960	0.020	48.0	-0.5	47.5
9.0	1.080	0.010	108.0	-0.25	107.8
9.6	1.152	0.004	288.0	0.0	288.0
10.0	1.200				
11.0	1.320				
12.0	1.440				
13.0	1.560				
14.0	1.680				

GPO 852 - 187

Figure X4.1. – Pore air pressure computation sheet—example.

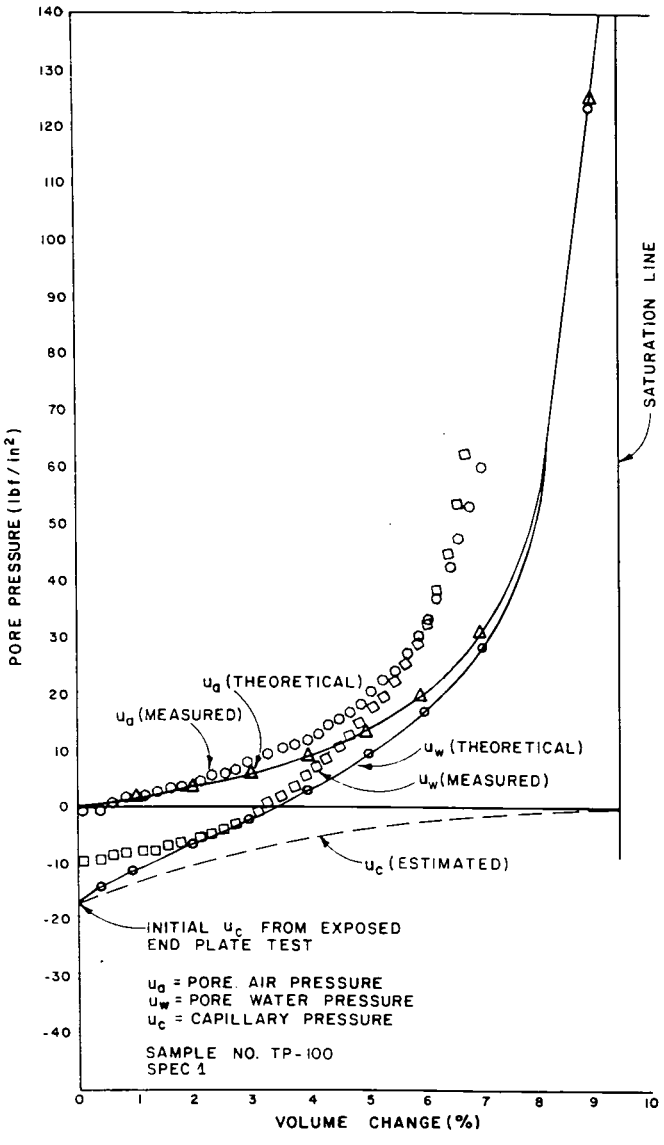

Figure X4.2. - Pore air and pore water pressures versus percent volume change—example.

X4.2.9 On figure X4.2, plot the values of u_w versus volume change (in percent) on the graph and connect the data points with a smooth curve.

X4.3 Performing The Test and Plotting Data

X4.3.1 Place the specimen in the triaxial assembly using the correct type of porous inserts in the top and bottom end plates (fine ceramic on top, coarse on bottom).

X4.3.2 If the porous insert in the bottom end plate has a bubbling pressure of 5 lbf/in² or less, obtain a precut No. 200 screen. Spray the screen with a silicon mold release.

X4.3.3 Place the No. 200 screen on top of the bottom end plate. The purpose of the No. 200 screen is to ensure a "break line" between the soil and the end plate, so that pore air pressure is measured.

X4.3.4 Use the injector to control capillary pressure u_w in the top end plate. Allow u_w to "draw down" to no more than about 8.0 lbf/in² negative (assuming the value of u_c exceeds 8 lbf/in²).

X4.3.5 Apply the lateral pressure slowly. Constantly monitor the values of u_a and u_w.

X4.3.6 Both u_a and u_w should closely follow the theoretical curves as on figure X4.2. If u_c is greater than about minus 8 lbf/in² it must be controlled with the injector until the specimen has undergone sufficient volume change so the negative pressure is less than about minus 8.0 lbf/in².

X4.3.7 Compute percent volume change of the specimen at 5.0 lbf/in² lateral pressure increments.

X4.3.8 Volume strain of the specimen may be computed.

$$\epsilon_v = 100 \frac{(\Delta VT_n + \Delta VC - \Delta VP + \Delta TV)}{V_o} \quad \text{(X4-8)}$$

where:

ϵ_v = volume strain, %
V_o = initial specimen volume, in³
ΔVT_n = $(\Delta VT)\ (VT_f)$ = converted volume tube change, in³
100 = convert from decimal to percent

and

ΔVT = volume tube change, in
VT_f = voume tube factor, in/³in
ΔVC = $[(\sigma_3 - LTPR_i)\ (SL_i)] + Y_i$ = chamber volume change, in³

and

σ_3 = applied lateral pressure, lbf/in²
$LTPR_i$ = lateral pressure intercept for lateral pressure increment considered, lbf/in²
SL_i = slope of line relating volume change to applied lateral pressure for pressure increment considered, in³/(lbf/in²)
Y_i = volume change intercept for lateral pressure increment considered, in³
ΔVP = $\Delta L\ (AP)$ = volume change due to piston movement, in³

and

ΔL = change in piston length, in
AP = load piston area, in²
ΔTV = $T_f\ (T_1 - T_i)$ = volume change due to temperature change, in³

and

T_f = temperature correction coefficient, in³/°F
T_1 = initial temperature reading, °F
T_i = subsequent temperature reading, °F

NOTE X4.2.–*Carefully* observe equation signs. This equation is valid only if axial deformation indicator readings decrease as specimen height decreases.

X4.3.9 Percent volume change for the K_o test may be computed either by the equation shown in subparagraph X4.3.8 (this appendix) or by the following equation:

$$\Delta V = 100 \left[\frac{(L_1 - L_i)\ A_i}{V_o} \right] \quad \text{(X4-9)}$$

where:

L_1 = LVDT or dial initial reading, in
L_i = LVDT or dial subsequent reading, in
A_i = specimen area at subsequent reading, in^2
V_o = specimen volume initial reading, in^3
100 = convert from decimal to percent

This equation will give correct values in the K_o test since diameter of the specimen is not allowed to change.

X4.3.10 Plot the values of u_a and u_w on the graph (fig. X4-2) as lateral pressure and axial load are applied. Continue to plot the measured values of u_a and u_w and compare them with theoretical values as the test progresses.

X5. THEORY AND BASIC EQUATIONS ASSOCIATED WITH THE K_O TEST

X5.1 Scope

X5.1.1 This appendix outlines theory, basic equations, and assumptions associated with a triaxial shear test with zero lateral strain (K_o -Test).[1]

X5.2 Discussion

X5.2.1 The theories used when performing the K_o test are based on the assumption that the soil is both isotropic and homogeneous and that the ratio between a linear stress, σ, and the corresponding linear strain, ϵ, is a usable relationship in the form of a modulus.

$$\frac{\sigma}{\epsilon} = E \qquad \text{(X5-1)}$$

X5.2.2 The positive vertical strain produced by a vertical pressure is associated with a negative horizontal strain, ϵ_1. The absolute value of the ratio between the strains is called Poisson's ratio, μ.

$$\mu = \frac{\epsilon_1}{\epsilon} = \frac{\epsilon_1}{\sigma} E \qquad \text{(X5-2)}$$

X5.2.3 In a K_o test, lateral strain is not permitted; so in an element of soil that is laterally confined and compressed by a vertical pressure, σ_y, there will be compression stresses σ_x and σ_z acting on the sides of the element (see fig. X5.1). The stresses acting on the sides of an element will cause strain in the direction of the stress as well as strains in the two axes perpendicular to the stress. Strains in the perpendicular directions are equal to the strain in the direction of stress times Poisson's ratio, μ. Since lateral displacement is not permitted in a K_o test, the stresses in the X (or Z) direction are in equilibrium so that:

$$\sigma_x - \mu\sigma_y - \mu\sigma_z = 0 \qquad \text{(X5-3)}$$

X5.2.4 The K_o test is performed on a cylindrical specimen which is symmetrical; therefore, $\sigma_x = \sigma_z$ and the state of stress has circular symmetry about the σ_y axis. From equation X5-3, the ratio, K_o, *of the lateral stresses* σ_x or σ_z to the vertical stress σ_y is:

$$\frac{\sigma_x}{\sigma_y} = \frac{\sigma_z}{\sigma_y} = \frac{\mu}{1-\mu} = K_o \qquad \text{(X5-4)}$$

X5.2.5 The volume change per unit volume of a soil specimen resulting from these applied stresses is equal to the sum of the volume change per unit of volume produced by each stress individually. The volume change per unit of volume $\Delta V/V$ for such a configuration is:

$$\Delta V/V = \frac{1-2\mu}{\epsilon}(\sigma_y + 2\sigma_x) \qquad \text{(X5-5)}$$

In the triaxial test, the major and minor principal stresses are assumed to be:

$\sigma_1 = \sigma_y =$ vertical principal stress, and

$\sigma_3 = \sigma_x = \sigma_z =$ horizontal principal stress (lateral stress).

Actually, during loading, shear stresses develop between the porous end plate inserts and the specimen ends thus introducing a small error. Equation X5-5 can be rearranged to obtain values of E_d, the modulus of deformation:

$$E_d = \frac{1-2\mu}{\Delta V/V}(\sigma_1 + 2\sigma_3) \qquad \text{(X5-6)}$$

Since $\Delta V/V$ is equivalent to $\epsilon_a/100$, equation X5-6 can be written:

$$E_d = \frac{1-2\mu}{\epsilon_a/100}(\sigma_1 + 2\sigma_3) \qquad \text{(X5-7)}$$

where ϵ_a is the axial strain in percent.

If total stresses were used, K_o would vary in relation to the water table. For this reason, K_o is defined as the ratio of horizontal to vertical effective stresses. Introducing effective stresses into equation X5-4, K_o may be expressed as:

$$K_o = \frac{\mu}{1-\mu} = \frac{\sigma_3'}{\sigma_1'} \text{ or } \frac{\sigma_h'}{\sigma_v'} \qquad \text{(X5-8)}$$

This permits an evaluation of μ which can be used in equation X5-6 to evaluate E_d.

X5.2.6 For materials that are essentially incompressible and without shear strength, such as water, the value of μ is 0.5 and the corresponding value of K_o is 1.0. The value of K_o can exceed 0.5 in dilatant materials, dense sand, and overconsolidated clays. By definition, K_o normally corresponds to the coefficient of earth pressure at rest using elastic theory.

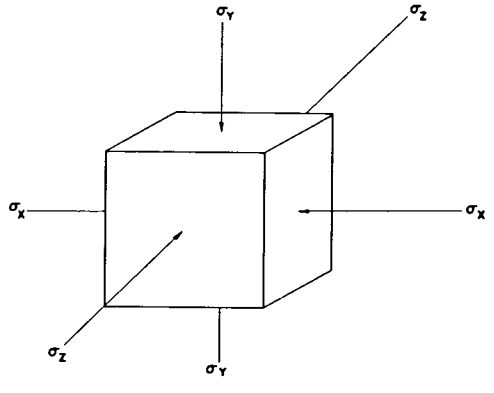

Figure X5.1. - Normal stresses acting on an element.

[1] Knodel, P. C., *Triaxial Shear Test With Zero Lateral Strain* (K_o -Test), Report No. Bureau of Reclamation, REC-ERC-71-27, 9 pp, Denver, Colorado, May 1971.

X6. METHODOLOGY FOR SETTING VOLUMETRIC STRAIN EQUAL TO AXIAL STRAIN

X6.1 Method

X6.1.1 This test requires that volumetric and axial strain be equal for reasons explained in appendix X5. Because a new computed volume tube reading is needed quickly, a computer or programmable calculator is required to perform the test. This appendix outlines the logic and required computations needed for this computer program.

X6.2 Logic

X6.2.1 In simplest form, the new volume tube reading could be calculated by determining axial specimen displacement and then calculating the corresponding volumetric displacement. But, for better accuracy, volumetric corrections for test equipment should be included in the calculations. Test equipment corrections follow.

X6.2.2 A correction must be made for chamber expansion as chamber pressure is increased. Since this volume change is not linear, a calibration curve is prepared; and for ease in calculation, the curve is typically broken into four straight line segments as shown on figure 6. The computer program must have the capability to calculate chamber volume change caused by a given change in chamber pressure (lateral pressure). The relationship is given on figure 5 [data sheet 3, col. (15)].

NOTE X6.1.–These calibration curves are determined separately from this procedure, and are kept on file for each triaxial assembly (see USBR 1450).

X6.2.3 Specimen volume change also must be corrected for water displacement from the chamber caused by the piston entering the cell during axial loading. This relationship is linear and is given on data sheet 3 in column (16).

NOTE X6.2.–The piston area is recorded with the apparatus calibration information.

X6.2.4 Changes in temperature also affect the volume of the chamber. The relationship is assumed linear for the operating range of temperatures in the laboratory as shown on data sheet 3 in column (17).

NOTE X6.3.–See appendix X1 for derivation of temperature correction coefficient.

X6.3 Calculations

X6.3.1 By using the equations—given on data sheet 3—and assuming positive changes in axial dial reading as positive axial strain and positive changes in volume tube reading as positive volumetric strain, the following relationship is found:

$$\frac{\Delta V}{V_o} = \frac{\Delta L}{L_o}$$

or:

$$\frac{(4_i - 4_1)\,VT_f + (15) - (16) + (17)}{V_o} = \frac{(3_1 - 3_i)}{L_o} \qquad \text{(X6-1)}$$

where:

V_o = specimen volume initial reading, in^3
ΔV = change in specimen volume, in^3
L_o = specimen length initial reading, in
ΔL = change in specimen length, in
VT_f = volume tube factor, in^3/in
(15) = chamber volume change, in^3
(16) = volume change due to piston movement, in^3
(17) = temperature volume change, in^3
(3_1) = axial dial initial reading, in
(3_i) = axial dial reading – current, (in)
(4_1) = volume tube initial reading, in
(4_i) = volume tube current reading, in

X6.3.2 Solving for the volume tube reading, equation (X6.1) becomes:

$$4_i = (4_1) \frac{[V_o\,(3_1 - 3_i)]}{VT_f\,L_o} + \frac{[(16) - (15) - (17)]}{VT_f} \qquad \text{(X6-2)}$$

X6.3.3 The program is initialized by storing the assembly calibration coefficients, initial specimen data, and initial gauge readings. During the test, the operator enters the axial dial gauge readings into the computer that compute what the new volume tube reading should be for a given axial dial gauge reading. The operator then adjusts the lateral pressure in order to bring the volume tube reading to the calculated level.

NOTE X6.4–This is an approximate procedure because the new lateral pressure cannot be applied at the instant it is calculated.

UNITED STATES DEPARTMENT OF THE INTERIOR
BUREAU OF RECLAMATION

USBR 5745-89

PROCEDURE FOR

PERFORMING UNCONSOLIDATED-UNDRAINED TRIAXIAL SHEAR TESTING OF SOILS

INTRODUCTION

This procedure is under the jurisdiction of the Geotechnical Services Branch, Code D-3760, Research and Laboratory Services Division, Denver Office, Denver, Colorado. The procedure is issued under the fixed designation USBR 5745. The number immediately following the designation indicates the year of acceptance or the year of last revision.

1. Scope

1.1 This designation outlines the procedure for determining the shear strength of unconsolidated-undrained cylindrical soil specimens in either the undisturbed, remolded, or compacted state using the triaxial shear test method.

1.2 The UU (unconsolidated-undrained) test can be performed on saturated or partially saturated soil specimens to determine the shear strength of a soil under undrained conditions.

1.3 The UU test is performed using either strain or stress controlled axial loading. The rate of strain or rate of stress application is dependent on the type of soil being tested.

1.4 Lateral pressure (confining pressure or cell pressure) is applied manually at a rate compatible with the type of soil being tested.

1.5 Total stress conditions can be evaluated, or pore pressure measurements may be made during the UU test so that effective stress can be evaluated (see app. X3).

1.6 UU tests have been performed successfully on many types of soil, ranging from fine-grained to coarse-grained soil, containing up to 3 inches (76 mm) maximum particle size. Specimen sizes for various types of soil have ranged from 1-3/8 inches diameter by 3 inches high to 9 inches diameter by 22-1/2 inches high (35- by 75- to 230- by 570-mm).

1.7 This procedure differs from ASTM D 2850 in that the rate of strain or rate of stress application is much slower than specified in ASTM D 2850, and pore pressure measurements may be made using this procedure.

1.8 The test provides data for determining shear strength properties and stress-strain relations for soils.

1.9 Multiple specimens may be tested under single stage compressive loading or a single specimen may be tested under multistaged compressive loading.

2. Auxiliary Tests

2.1 A compacted or undisturbed soil specimen must be prepared in accordance with USBR 5210 or 5215 prior to performing this procedure. A moisture content and unit weight determination must be obtained in accordance with USBR 5300 and 5370, respectively, to obtain placement conditions for the test specimen. Physical properties tests are to be performed in accordance with USBR 5320, 5330, 5350, 5360, and 5365 after completion of the test. Initial capillary pressure, determined in accordance with USBR 5735, may be required prior to performing this procedure on partially saturated specimens. (See app. X3 for a discussion of pore-pressure analysis for this procedure and app. X4 for determining and plotting pore air, pore water, and capillary pressure.)

3. Applicable Documents

3.1 *USBR Procedures*:

USBR 1008 Calibrating Linear Variable Differential Transformers
USBR 1012 Calibrating Balances or Scales
USBR 1040 Calibrating Pressure Gauges
USBR 1045 Calibrating Force Transducers (Load Cells)
USBR 1050 Calibrating Pressure Transducers
USBR 1055 Calibrating Differential Pressure Transducers
USBR 1450 Calibrating Triaxial-Type Chambers for Pressure-Volume Change Relations
USBR 1455 Calibrating Volume and Drain Tubes
USBR 3900 Standard Definitions of Terms and Symbols Relating to Soil Mechanics
USBR 5210 Preparing Compacted Soil Specimens for Laboratory Use
USBR 5215 Preparing Soil Specimens for Laboratory Use From Undisturbed Samples
USBR 5300 Determining Moisture Content of Soil and Rock by the Oven Method
USBR 5320 Determining Specific Gravity of Soils
USBR 5330 Performing Gradation Analysis of Fines and Sand Size Fraction of Soils, Including Hydrometer Analysis
USBR 5350 Determining the Liquid Limit of Soils by the One-Point Method
USBR 5360 Determining the Plastic Limit and Plasticity Index of Soils

USBR 5365 Determining Shrinkage Limit and Shrinkage Ratio of Soils
USBR 5370 Determining Unit Weight of Cylindrical Soil Specimens
USBR 5735 Determining Initial Capillary Pressure of Soils
USBR 5750 Performing Consolidated-Undrained Triaxial Shear Testing of Soils
USBR 7000 Performing Disturbed Soil Sampling in Test Pits, Trenches, Accessible Borings, and Tunnels
USBR 7010 Performing Disturbed Soil Sampling Using Auger Boring Method
USBR 7100 Obtaining Undisturbed Block Samples by the Hand and Chain Saw Methods
USBR 7105 Performing Undisturbed Soil Sampling by Mechanical Drilling Methods

3.2 *ASTM Standard*:
ASTM: D 2850 Test Method for Unconsolidated, Undrained Compressive Strength of Cohesive Soils in Triaxial Compression

4. Summary of Method

4.1 A soil specimen is prepared and placed in a standard triaxial assembly as shown on figure 1. The chamber is sealed, and a confining pressure is applied to the specimen and volume change and pore pressures are allowed to stabilize. Axial load is applied using either a strain or stress controlled loading device. The moisture content of the test specimen is not permitted to change during application of the confining pressure or during compression. As axial load is applied, deviator load, axial specimen deformation, specimen volume, pore pressure, and chamber water temperature are measured and recorded. Shear stress, major and minor principal stresses at failure, and axial strain at failure are obtained. Stress-strain curves are plotted and effective stress or total stress shear strength envelopes can be prepared. For single stage compressive loading of multiple specimens, at least three specimens are required for one complete UU triaxial shear test. For multistage compressive loading, only one specimen is required for one complete UU triaxial shear test.

5. Significance and Use

5.1 Shear strength can be measured (in this test) in terms of either total stress or effective stress. Shear strength in terms of effective stress, which is total stress corrected for pore pressure, depends on the pressure developed in the pore fluid during loading. If fluid is allowed to flow from or into a soil specimen as load is applied, the resulting pore pressure—hence, shear strength—differs from that developed in the case where drainage cannot occur. Drainage across the boundaries of the specimen is not permitted in this procedure, so shear strength measured in terms of total stress generally is not applicable to field problems where drainage occurs.

6. Terminology

6.1 Definitions are in accordance with USBR 3900. Terms of particular significance are:

6.1.1 *Consolidation*.–The time-dependent reduction in volume of a soil mass resulting from an increase in effective stress.

6.1.2 *Deviator Stress* (σ_1–σ_3).–The difference between the major and minor principal stresses in a triaxial test (ASTM definition).

6.1.3 *Effective Stress* (σ').–The average normal force per unit area transmitted from grain to grain of a soil mass (similar to ASTM).

6.1.4 *Mohr Circle*.–A graphical representation of the stresses acting on the various planes at a given point (ASTM).

6.1.5 *Neutral Stress/Pore Pressure/Pore Water Pressure* (u).–Stress transmitted through the pore water (water filling the voids of the soil)(ASTM).

6.1.6 *Strength*.–The maximum stress which a material can resist without failing for any given type of loading (International Society for Rock Mechanics).

6.1.7 *Triaxial Shear Test*.–A test in which a specimen of soil or rock encased by an impervious membrane is subjected to a confining pressure and then loaded axially to failure (ASTM).

6.2 Terms not included in USBR 3900 specific to this designation are:

6.2.1 *Bubbling Pressure*.–Pressure required to force air through a saturated porous insert (also referred to as the air-entry value).

6.2.2 *Failure*.–The stress condition at failure for a test specimen is taken to correspond to the maximum deviator stress attained, or the deviator stress (principal stress difference) at 20-percent axial strain, whichever is obtained first during performance of a test.

7. Apparatus

7.1 *General Apparatus*:

7.1.1 *Balance or Scale*.–Balance or scale meeting the requirements shown in table 1.

Table 1.–Balance or scale requirements.

Test specimen size				Balance or scale	
Diameter in	Height in	Diameter mm	Height mm	Capacity	Readability
2.0	5.0	50.8	127.0	1000 g	0.05 g
2.8	7.0	71.1	177.8	2000 g	0.1 g
6.0	15.0	152.4	381.0	25 kg	0.01 kg
9.0	22.5	228.6	571.5	75 kg	0.01 kg

7.1.2 *Timer*.–A timing device indicating elapsed time to the nearest 1 second is to be used for establishing the rate of stress or strain application

7.1.3 *Specimen Size Measurement Devices*.–Devices used to measure the height and diameter of the specimen. The devices must be capable of measuring to the nearest

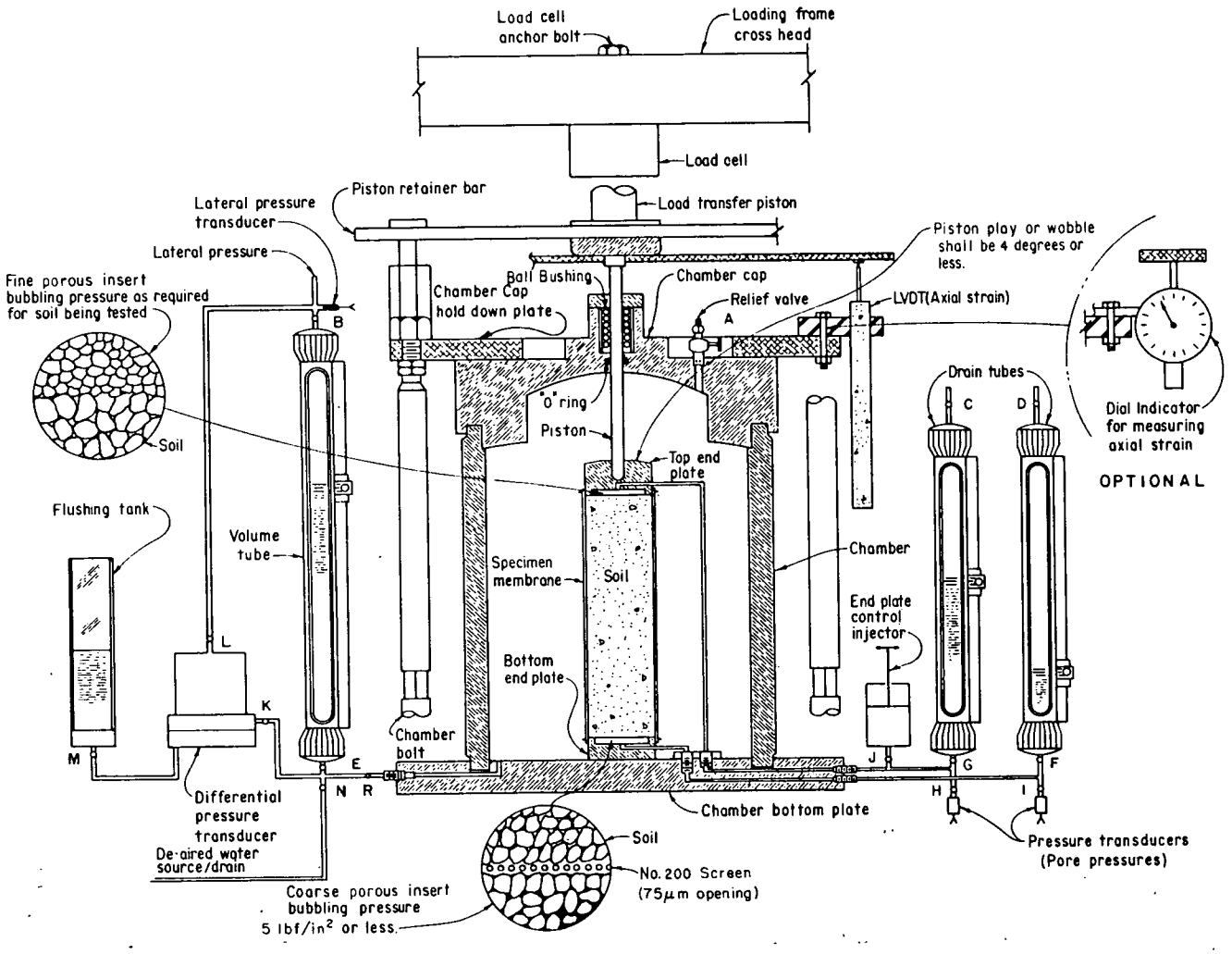

Figure 1. – Triaxial assembly for unconsolidated-undrained tests.

0.001 inch (0.025 mm) and should be constructed such that their use will not disturb the specimen. A vernier caliper is recommended for measuring specimen height and a pi tape for measuring specimen diameter.

NOTE 1.–For specimens having a height that exceed 12 inches (305 mm), use a rule graduated in millimeters to measure the height of the specimen to the nearest 1.0 mm (1/32 in).

7.1.4 *Water Container.*–Sufficient size to accommodate the test specimen.

7.1.5 *Suspension Wire and Specimen Carriage.*–For determining the specimen mass in air and water.

7.2 *Equipment Unique to This Procedure*:

7.2.1 *Axial Loading Device* (compression test machine).–A loading device (fig. 2) having sufficient capacity and control to provide the desired magnitude and rate of loading, respectively.

7.2.2 *Chamber Pressure Maintaining and Measurement Devices.*–Devices must be capable of applying and controlling the chamber pressure to within ±0.5 lbf/in² (±3.5 kPa). The devices may consist of a reservoir connected to the chamber and partially filled with the chamber fluid (usually water), with the upper part of the reservoir connected to a pressurized gas supply. The gas pressure is controlled by a pressure regulator and measured by a pressure gauge, electronic pressure transducer, or any other device capable of measuring to the prescribed tolerance. However, a hydraulic system pressurized by deadweight acting on a piston or any other pressure maintaining and measurement device capable of applying and controlling the chamber pressure to the tolerance prescribed in this subparagraph may be used.

7.2.3 *Triaxial Assembly.*–A chamber (fig. 1) in which a cylindrical specimen, enclosed by a membrane sealed to end plates, is placed and subjected to axial load while confined by a lateral (σ_3) pressure. The triaxial chamber consists of a chamber bottom plate, chamber, and chamber cap. The chamber cap includes a ball bushing and piston, aligned with the axis of the specimen, through which the load from the axial loading device can be transmitted to the specimen to cause the specimen to be compressed axially between the end plates. The ball bushing and piston must be designed to minimize friction.

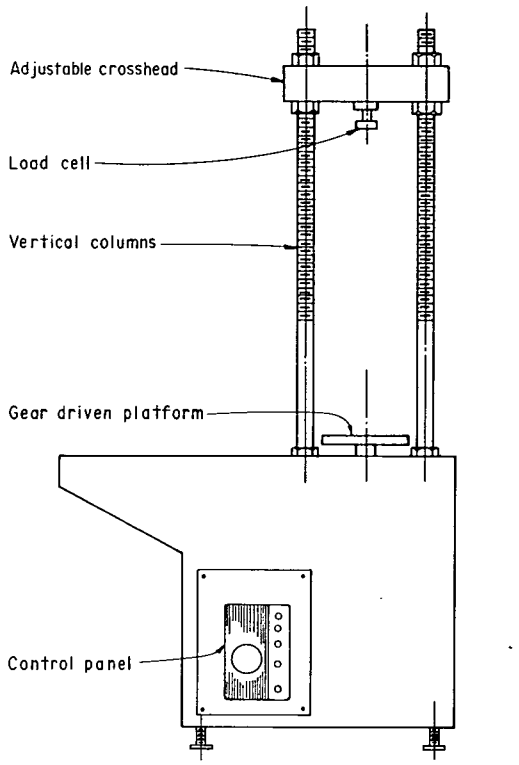

Figure 2. - Compression test machine.

7.2.3.1 *Specimen End Plates.*-The end plates must be constructed of a noncorrosive impermeable material such as aluminum, stainless steel, or titanium; each must have a circular cross section and circular plane surface of contact with the specimen. The mass of the top end plate must be less than 0.5 percent of the applied axial load at failure. The diameter of the end plates should be within ±0.020 inch of the diameter of the specimen. The bottom end plate must be coupled to the chamber bottom plate to prevent lateral motion or tilting. The top end plate must be designed to receive the piston such that the piston-to-end plate contact area is concentric with the cap. It is recommended that the top end plate should be constructed in a manner so that piston play or "wobble" be restricted to 4 degrees or less perpendicular to the top end plate. Each end plate must be plumbed so air can be flushed from the end plate. The cylindrical surface of the end plates to which the membrane is sealed should be smooth and free of scratches. The end plates must be constructed so that pore pressure measurements can be obtained from both ends of the specimen. Each end plate shall be fitted with a porous insert.

7.2.3.2 *Porous End Plate Inserts.*-Porous inserts are manufactured from silicon carbide, aluminum oxide, sintered bronze, or ceramic. The material must not be susceptible to corrosion by soil substances or moisture. The proper grade (coarseness) of insert depends upon the type of test being performed and the soil being tested. The insert should be coarse enough to develop adequate interlock with the specimen, but fine enough to prevent excessive intrusion of soil into the pores of the insert. Exact criteria for this have not been established. The coarseness of insert material determines two properties vital to pore pressure measurements: (1) permeability, the rate of diffusion of a pressurized gas through a porous material; and (2) bubbling pressure, the air entry value; i.e., the pressure required to force air through a saturated porous insert.

7.2.3.3 *Axial Load-Measuring Device.*-The load measuring device shall be capable of measuring the axial load to an accuracy of ±0.25 percent over its full range.

7.2.3.4 *Pore Pressure Transducers.*-Pore pressure transducers are used to measure the pore pressure in the soil specimen. The pressure transducers shall have an accuracy of ±0.25 percent over their full range.

7.2.3.5 *Lateral Pressure Transducer.*-The lateral pressure transducer is used to measure the lateral pressure applied inside the chamber. The transducer shall have an accuracy of ±0.25 percent over its full range.

7.2.3.6 *Differential Pressure Transducer.*-The differential pressure transducer is used to measure volume change of the specimen during the test. The transducer and volume tube are plumbed so that the height of the water column in the volume tube reacts directly on the measuring diaphragm inside the transducer. The transducer shall have an accuracy of ±0.25 percent of its full range.

7.2.3.7 *Volume Tube.*-A constant bore glass tube supported by a sectional brass pipe with watertight seals on both ends. The volume tube is used primarily as a means of visually monitoring the volume change of the specimen. However, it serves also as a water reservoir and flushing tube when de-airing the system. For triaxial systems, in which visual readings of the volume tube are used in determining volume change of the specimen, the volume tube should be graduated in 0.01 inch divisions. For triaxial systems, in which a differential pressure transducer (as described in subpar. 7.2.3.6) is used in determining volume change of the specimen, it is recommended that the volume tube be graduated in 0.1 inch divisions so that a visual check of the specimen volume change can be made. The volume tube must be capable of withstanding pressures up to 250 lbf/in² (1724 kPa). The volume tube assembly must be enclosed in a 1/4-inch thick (6 mm) Plexiglas shield to prevent injury to personnel in the event the volume tube fails.

7.2.3.8 *Drain Tube.*-A constant bore glass tube supported by a sectional brass pipe with watertight seals on both ends. For UU (unconsolidated-undrained) tests, the drain tubes are used as a water reservoir and flushing tube when de-airing the system. The drain tube must be capable of withstanding pressures up to 250 lbf/in² (1724 kPa). The drain tube assembly must be enclosed in a 1/4-inch thick (6 mm) Plexiglas shield to prevent injury to personnel in the event the drain tube fails.

7.2.3.9 *Flushing Tank.*-Plexiglas tube used in conjunction with the volume tube to de-air the differential pressure transducer.

7.2.3.10 *Axial Deformation Indicator.*-A dial indicator or LVDT (linear variable differential transformer)

having 0.001-inch (0.025 mm) resolution, and travel range of at least 20 percent of the initial height of the test specimen. Other measuring devices meeting these requirements for precision and range may be used.

7.2.3.11 *Specimen Membrane.*–A membrane used to encase the specimen to isolate it from chamber fluid. Membranes should be carefully inspected prior to use; if any flaws or pinholes are evident, the membrane should be replaced. To minimize restraint to the specimen, the unstretched membrane diameter should be between 75 and 90 percent of the specimen diameter. The membrane thickness must not exceed 1 percent of the diameter of the specimen. The membrane must be sealed to the end plates with two rubber O-rings for which the unstressed inside diameter is 75 percent or less of the diameter of the end plate. Other methods that produce a positive seal may be used.

7.2.3.12 *Fine Mesh Screen.*–A No. 200 (75 μm) mesh screen to be placed between the specimen and the porous insert of the bottom end plate.

7.2.3.13 *End Plate Control Injector.*–A water filled hydraulic system which uses a threaded rod attached to an O-ring sealed piston. The operator can manually control water pressure by rotating the knob on the injector system clockwise to increase the pressure or counterclockwise to decrease the pressure in the system.

NOTE 2.–The end plate control injector is to be used only to control the hydraulic system for measuring pore water pressure to ensure that it does not cavitate; i.e., does not exceed about minus 8.0 lbf/in² (–55 kPa).

7.3 *Miscellaneous Apparatus*:

7.3.1 *Tools, Etc.*–Specimen trimming and carving tools, membrane expander, O-ring expander, moisture content cans, and data forms as required.

7.3.2 *Humidity Room.*–A soil storage and sample preparation room with controlled temperature and humidity. The humidity room at the geotechnical laboratory at the Denver Office is designed to maintain 70±5 percent relative humidity and a temperature of 70±5 °F (21±3 °C).

8. Reagents and Materials

8.1 Water used for performing the test is to be de-aired water at room temperature. The purity should be such that the water is free of acids, alkalies, or oils, and is suitable for drinking.

9. Precautions

9.1 *Safety Precautions*:

9.1.1 Safety shoes should be worn when de-airing the equipment or placing the specimen.

9.1.2 Water spillage in the area should be cleaned up as soon as possible.

9.1.3 Safety glasses should be worn when applying air pressure to the volume/drain tubes when saturating or consolidating the specimen.

9.1.4 Pressure should be slowly applied and released from the triaxial assembly to prevent the glass volume tubes from shattering.

9.2 *Technical Precautions*:

9.2.1 Care must be taken to completely de-air the triaxial assembly prior to performing the test.

9.2.2 The porous inserts in the end plates should be cleaned frequently to remove any impurities which may inhibit free waterflow.

9.2.3 When performing a UU-type test on an unsaturated specimen, the increase in pore pressure with corresponding decrease in specimen volume accelerates rapidly as the test specimen approaches complete saturation. As this occurs, it is not reasonable to assume that pore pressure in the specimen can equalize; and as a result, the measured pore pressure response may not be accurate.

10. Sampling, Test Specimen, and Test Units

10.1 *Sample Size*:

10.1.1 *Compacted Specimens*:

10.1.1.1 Samples to be used in triaxial shear testing of compacted specimens should be obtained in accordance with methods presented in USBR 7000 or 7010.

10.1.1.2 A sufficient mass of material should be obtained so that all required testing can be performed on the sample. Suggested minimum sample mass (based on minimum specimen size, maximum particle size, and a minimum of four specimens per test) should be in accordance with table 2.

Table 2. – Suggested minimum sample mass.

Test specimen size				Practical field sample mass	
Diameter in	Height in	Diameter mm	Height mm	lbm	kg
2.0	5.0	50.8	127.0	65	30
2.8	7.0	71.1	177.8	100	45
6.0	15.0	152.4	381.0	200	90
9.0	22.5	228.6	571.5	700	320

10.1.2 *Undisturbed Specimens.*–Samples to be used in triaxial shear testing of undisturbed specimens should be obtained in accordance with methods presented in USBR 7100 or 7105.

10.2 *Specimen Size*:

10.2.1 Test specimen size and maximum particle size should be in accordance with table 3.

Table 3.–Specimen and maximum particle size.

Test specimen size				Maximum partical size	
Diameter in	Height in	Diameter mm	Height mm	in	mm
2.0	5.0	50.8	127.0	No. 4	4.75
2.8	7.0	71.1	177.8	0.375	9.5
6.0	15.0	152.4	381.0	0.75	19.0
9.0	22.5	228.6	571.5	1.5	37.5

10.2.2 If, after completion of a test, it is found that oversize particles were present indicate this information in the report of test data under *Remarks*.

NOTE 3.–For specimen sizes and maximum particle sizes not listed in table 3, maximum particle size should be equal to or less than one-sixth the specimen diameter.

10.2.3 Specimen height-to-diameter ratio must be between 2 and 3.

10.3 *Compacted Specimens.*–Prepare compacted test specimens in accordance with USBR 5210.

10.4 *Undisturbed Specimens.*–Prepare undisturbed test specimens in accordance with USBR 5215.

10.5 *Remolded Specimens*:

10.5.1 Prepare remolded test specimens by thoroughly working with the fingers an undisturbed specimen encased in the specimen membrane and sealed to the end plates.

10.5.2 Place a mold around the specimen and push down on the top end plate until the specimen fills the mold. The mold must have dimensions such that the remolded specimen dimensions will be equal to those of the undisturbed specimen. Care should be taken so the specimen membrane is not damaged or punctured during the remolding process.

10.5.3 Care must be taken to avoid entrapping air in the specimen during remolding. Entrapment of air may result in a remolded specimen having a unit weight, void ratio, and/or moisture content inconsistent with that of the undisturbed specimen.

10.6 *Determine the Initial Capillary Pressure of Partially Saturated Specimens*:

10.6.1 Determine the initial capillary pressure of the soil in accordance with USBR 5735.

10.6.2 Compute and plot the theoretical pore air pressure of the specimen as shown in appendix X4 of this procedure.

11. Preparation of Apparatus

11.1 *Saturation of Porous Inserts and De-Airing of End Plates*:

11.1.1 If new porous inserts with a bubbling pressure greater than 5 lbf/in² (35 kPa) are to be used for the test, the end plate, connecting lines, and porous insert are to be completely submerged in de-aired water and boiled from 8 to 16 hours to ensure that all entrapped air has been removed.

11.1.2 If end plates with previously saturated porous inserts with a bubbling pressure greater than 5 lbf/in² are to be reused for the test, the end plates, connecting lines, and porous inserts are to be removed from the triaxial assembly, completely submerged in de-aired water, and boiled for a minimum of 4 hours to remove any entrapped air.

11.1.3 If new porous inserts with a bubbling pressure of 5 lbf/in² or less are to be used for the test, the end plates, connecting lines, and porous inserts are to be completely submerged in de-aired water and boiled for a minimum of 2 hours to ensure that all entrapped air has been removed.

11.1.4 If end plates with previously saturated porous inserts with a bubbling pressure of 5 lbf/in² or less are to be reused for the test, the end plates, connecting lines, and porous inserts can be left in the triaxial assembly for subsequent tests and de-aired using vacuum.

11.2 *De-Airing the Triaxial Assembly* (fig. 1):

11.2.1 Attach the saturated end plates with porous inserts to the chamber bottom plate.

11.2.1.1 Place the bottom end plate with centering dowel into the hole in the center of the chamber bottom plate.

11.2.1.2 To ensure that pressure does not build up in the system when the end plate connecting lines are attached to the fittings in the chamber bottom plate, open valves F or G slightly to allow a small amount of water to flow from the appropriate drain tube and flushing tank through the fittings in the chamber bottom plate while the appropriate end plate connecting lines are being attached.

11.2.1.3 Open valve F. Attach the bottom end plate connecting lines to the appropriate fittings in the chamber bottom plate. Close valve F.

11.2.1.4 Open valve G. Attach the top end plate connecting lines to the appropriate fittings in the chamber bottom plate. Close valve G.

11.2.2 Place the chamber into the groove in the chamber bottom plate.

11.2.3 Check that all system valves are closed.

11.2.4 Fill the chamber about one-half full with de-aired water.

11.2.5 Open chamber cap relief valve A.

11.2.6 Set the chamber cap in place and force the cap down until it is properly seated on the chamber.

11.2.7 Insert the piston through the opening in the chamber cap until the flange on the piston is resting on top of the chamber cap.

11.2.8 Open the valves to the top of the volume and drain tubes (valves B, C, and D).

11.2.9 If the unit is equipped with an end plate control injector, open valve J and turn the injector knob to the closed position (clockwise). Close valve J to the injector.

11.2.10 Attach vacuum hoses to the tops of the volume tube, drain tubes, and the fitting on chamber cap relief valve A.

11.2.11 Attach the other ends of the vacuum hoses into a suitable vacuum source, such as a vacuum pump. Turn on the vacuum pump.

11.2.12 Apply a vacuum of approximately 20 lbf/in² (140 kPa) for 5 minutes.

11.2.13 Release the vacuum to the chamber by uncoupling the vacuum line from the vacuum pump multiport manifold. Maintain the vacuum on the volume tube and drain tubes.

11.2.14 Open volume tube drain valve E and the volume tube isolation valve R, and fill the volume tube to the top of its markings with de-aired water from the chamber (vacuum is still on the volume tube).

11.2.15 Close volume tube drain valve E.

11.2.16 Open drain tube valves F and G and fill the drain tubes to the top of their markings with de-aired water from the chamber (vacuum is still on the drain tubes).

11.2.17 Close drain tube valves F and G.

11.2.18 Release the vacuum from the volume and drain tubes by uncoupling the appropriate vacuum lines from the vacuum pump.

11.2.19 Reattach the vacuum hose to chamber cap relief valve A to the vacuum source.

11.2.20 Open valve E and allow the water level in the volume tube to drop to about the 25-inch level (635 mm).

11.2.21 Close volume tube drain valve E.

11.2.22 Open drain tube valves F and G, and allow the water level in the drain tubes to drop to about the 25-inch level.

11.2.23 Close drain tube valves F and G.

11.2.24 Reattach vacuum hoses to the tops of the volume tube and drain tubes.

11.2.25 Displace water back and forth between the volume and drain tubes and the chamber by repeating subparagraphs 11.2.13 through 11.2.25 until air bubbles cannot be seen in the tubes.

11.2.26 Open valve J and turn the end plate control injector knob until the injector piston is at the open position (counterclockwise) to fill the injector with water.

11.2.27 Turn the injector control knob to move the injector piston to its full closed and full open positions several times to remove any entrapped air.

11.2.28 Leave the end plate control injector piston at midrange position for testing and close valve J.

11.2.29 If the volume and drain tubes are not full at the end of the flushing process fill the tubes by opening valves E, F, and G, with vacuum applied to the top of each tube. Fill the volume and drain tubes to the top of their tube markings with de-aired water so they can be drained to the desired level for testing purposes. Close valves A, E, F, and G.

11.2.30 Uncouple all vacuum lines from the manifold on the vacuum pump and shut off the vacuum pump.

11.2.31 Uncouple all vacuum lines from the triaxial assembly, coil the vacuum lines, and store in a suitable location for future use.

11.2.32 Do not drain the water from the chamber until the end plates and specimen are ready to be placed in the chamber as outlined in paragraph 14.

11.3 *De-Airing the Pore Pressure Transducers*:

11.3.1 Check that valves H and I are closed, then detach the pore pressure transducers from their fittings on the apparatus. Using a syringe, fill each transducer with de-aired water.

11.3.2 Open valve A. Slowly open valve H to allow a small amount of water to escape from the chamber. With water flowing, attach the transducer for the bottom end plate to the appropriate fitting. Leave valve H open.

11.3.3 Slowly open valve I to allow a small amount of water to escape from the chamber. With water flowing, attach the transducer for the top end plate to the appropriate fitting. Leave valve I open. Close valve A.

11.4 *De-Airing the Differential Pressure Transducer*:

11.4.1 Fill the flushing tank on the differential pressure transducer about two-thirds full of de-aired water. Close the volume tube isolation valve R to isolate the volume tube and differential pressure transducer from the chamber.

11.4.2 Open valve L on the differential pressure transducer. Remove the bottom plate on the differential pressure transducer by unscrewing the four cap head screws which hold it to the body of the transducer. Open valve M and fill the bottom plate with de-aired water from the flushing tank. Open valves E and K to the volume tank and allow water to flood over the exposed capsule located under the main body of the differential pressure transducer. With water flowing, place the bottom plate back on the differential pressure transducer while being careful not to entrap air. Close valve K, but leave valve M to the flushing tank slightly open to relieve any pressure which results from tightening the cap screws. Tighten the four cap head screws.

11.4.3 Flush the differential pressure transducer thoroughly by attaching a hand-held vacuum/pressure pump to the top of the flushing tank. Open valves K and M and flush water back and forth several times from the flushing tank and volume tube through the differential pressure transducer. When this step is complete, be sure the water level in the volume tube is near the full mark and close valve M. Open volume tube isolation valve R.

NOTE 4.–Extreme caution must be used when flushing the differential pressure transducer, since a pressure greater than about 10 lbf/in² (70 kPa) can damage the measuring capsule inside the transducer.

12. Calibration and Standardization

12.1 Verify that component parts of the triaxial assembly are currently calibrated in accordance with the applicable calibration procedure. If the calibration is not current, perform the calibration before using the equipment for this procedure.

13. Conditioning

13.1 Prepare, place, and load the test specimen in an area isolated from drafts, vibrations, and variations in ambient temperature.

14. Procedure

14.1 All data are to be recorded on figure 3, "Specimen Placement — Data Sheet 1" (for triaxial shear tests); figure 4, "Triaxial Shear Test — Data Sheet 2"; and figure 5, "Pore Air Pressure Computation Sheet." Perform calculations, as necessary, following step by step procedures outlined on figure 6, "Triaxial Shear Test — Data Sheet 3."

14.2 Record all identifying information pertaining to the sample, specimen, and triaxial assembly in designated blanks on data sheets 1 and 2.

14.3 Connect a hose to valve N; place the other end of the hose in an empty a container or into a drain.

14.4 Open valves A and N and drain all water from the chamber. Close valve N.

14.5 Remove the piston, the chamber cap, and the chamber from the chamber bottom plate.

7-2367 (10-86)
Bureau of Reclamation

SPECIMEN PLACEMENT-DATA SHEET 1
(FOR TRIAXIAL SHEAR TESTS)

Designation USBR 5745-89

SAMPLE NO.	PROJECT	FEATURE
50L - 61	Example	Example

LOCATION	DEPTH/ELEV
Borrow C	0.0 - 10.0 ft.

TESTED BY / DATE	COMPUTED BY / DATE	CHECKED BY / DATE

SPECIMEN TYPE: ☐ UNDISTURBED ☐ NATURAL MOISTURE ☒ COMPACTED ☐ WETTED

TEST TYPE: ☒ UU ☐ CD ☐ MULTISTAGE ☐ CU ☐ UKo ☐ DKo

SPECIMEN DIAMETER 2.00 (in) SPECIMEN LENGTH 5.00 (in)

PHYSICAL PROPERTIES

% GRAVEL 5
% SAND 33 (USBR 5325)
% FINES 62

LIQUID LIMIT 35 (%) (USBR 5350)
PLASTICITY INDEX 15 (%) (USBR 5360)
SPECIFIC GRAVITY 2.72 (USBR 5320)

CLASSIFICATION SYMBOL CL

		SPECIMEN 1	SPECIMEN 2	SPECIMEN 3
(1)	MASS OF WET SPECIMEN AND CONTAINER IN AIR (g)	713.2	716.5	715.0
(2)	MASS OF CONTAINER IN AIR (g)	154.1	159.4	155.8
(3)	MASS OF WET SPECIMEN (1) - (2) (g)	559.1	557.1	559.2
(4)	MASS OF DRY SPECIMEN (3)/[1 + (12)/100] (g)	496.5	494.8	496.6
(5)	MASS OF WET SPECIMEN AND CONTAINER IN WATER (g)	378.9	378.3	379.4
(6)	MASS LOSS OF WET SPECIMEN AND CONTAINER = (1) - (5) (g)	334.3	338.2	335.6
(7)	MASS OF CONTAINER IN WATER (g)	78.8	79.4	79.0
(8)	MASS LOSS OF CONTAINER = (2) - (7) (g)	75.3	80.0	76.8
(9)	MASS LOSS OF SPECIMEN = (6) - (8) (g)	259.0	258.2	258.8
(10)	SPECIMEN VOLUME = (9)/16.3498* (in^3)	15.841	15.792	15.829
(11)	DRY UNIT WEIGHT = [(4) x 3.8096*]/(10) (lbf/ft^3)	119.4	119.4	119.5
(12)	MOISTURE CONTENT (USBR 5300) (FROM BACK) (%)	12.6	12.6	12.6
(13)	SOIL VOLUME = (4)/(SpG x 16.3498*) (in^3)	11.165	11.126	11.167
(14)	PERCENT SOIL VOLUME = [(13)/(10)] x 100 (%)	70.48	70.45	70.55
(15)	WATER VOLUME = [(3) - (4)]/16.3498* (in^3)	3.829	3.810	3.829
(16)	PERCENT WATER VOLUME = [(15)/(10)] x 100 (%)	24.17	24.13	24.19
(17)	FREE AIR VOLUME = (10) - (13) - (15) (in^3)	0.847	0.856	0.833
(18)	PERCENT FREE AIR VOLUME = 100 - (14) - (16) (%)	5.35	5.42	5.26
(19)	VOID RATIO = [(10)-(13)]/(13)	0.4188	0.4194	0.4175
(20)	DEGREE OF SATURATION = $\frac{(15)}{(10) - (13)}$ x 100 (%)	81.89	81.65	82.13

*CONSTANTS: 16.3498 g/in^3 = $(2.54)^3$ x 0.997724 (cm/in)^3 x abs. density of water in g/cc @ 72 F.
3.8096 = (1728 in^3/ft^3) / (453.5924 g/lbm), 1 cc = 1 g @ 4°C

Figure 3. - Specimen placement—data sheet 1 (for triaxial shear tests)—example.

SAMPLE NUMBER 50L - 61

MOISTURE CONTENT DATA

	SPECIMEN 1	SPECIMEN 2	SPECIMEN 3	UNITS
CONTAINER NUMBER	71	43	89	
DATE PLACED IN OVEN	3-2-89	3-2-89	3-2-89	
(1) MASS OF CONTAINER + WET SPECIMEN	453.7	448.6	461.1	☒ g
(2) MASS OF CONTAINER + DRY SPECIMEN	417.0	413.2	424.2	
(3) MASS OF CONTAINER	125.7	132.4	131.4	☐ kg
(4) MASS OF WATER = (1) – (2)	36.7	35.4	36.9	
(5) MASS OF DRY SPECIMEN = (2) – (3)	291.3	280.8	292.8	☐ lbm
(6) MOISTURE CONTENT (%) = [(4)/(5)] X 100				
COMPUTED BY AND DATE				
CHECKED BY AND DATE				

COMPACTION DATA

(_____ dry unit wt.) x (1. / 1 + moist.) = (_____ wet den.) x (_____ factor (USBR 5210)) = _____ CONTAINER

_____ TOTAL

LAYER	MASS (g)	LENGTH (in)	LAYER	MASS (g)	LENGTH (in)
(1)			(6)		
(2)			(7)		
(3)			(8)		
(4)			(9)		
(5)			(10)		

COMPUTED BY _____ DATE _____ CHECKED BY _____ DATE _____

CONTAINER MASSES

	PARTS	MASS - SPECIMEN 1 (g) AIR	WATER	LOSS	PARTS	MASS - SPECIMEN 2 (g) AIR	WATER	LOSS	PARTS	MASS - SPECIMEN 3 (g) AIR	WATER	LOSS
CARRIAGE NO.	1	78.6	70.1	8.5	1	78.6	70.1	8.5	1	78.6	70.1	8.5
MEMBRAINE NO.	33	15.0	-1.3	16.3	34	16.3	-1.5	17.8	35	17.0	-1.4	18.4
END PLATES	EP-1	56.9	9.3	47.6	EP-2	62.2	11.7	50.5	EP-3	56.6	9.6	47.0
2-'O'- RINGS		3.6	0.7	2.9		3.6	0.7	2.9		3.6	0.7	2.9
MISC.												
TOTAL		154.1	78.8	75.3		160.7	81.0	79.7		155.8	79.0	76.8

COMPUTED BY _____ DATE _____ CHECKED BY _____ DATE _____

Figure 3. – Specimen placement—data sheet 1 (for triaxial shear tests)—example—Continued.

7-2371 (10-86)
Bureau of Reclamation

TRIAXIAL SHEAR TEST-DATA SHEET 2

Designation USBR 5745-89

SAMPLE NO.	SPECIMEN NO.	PROJECT	FEATURE
50L-61	3	Example	Example

TESTED BY	DATE	COMPUTED BY	DATE	CHECKED BY	DATE

Displacement rate 0.002 ☒ in/min ☐ mm/min

Applied lateral pressure 190.0 ☒ lbf/in² ☐ kPa

Back pressure N/A ☐ lbf/in² ☐ kPa

Barometric pressure 12.0 ☒ lbf/in² ☐ kPa

Pore-Pressure Coefficient(B) (saturation parameter) N/A

Volume Change of System — USBR 1450

Max. Lat. 1 10.0 Slope 1 0.0125 Intercept 1 0

Max. Lat. 2 50.0 Slope 2 0.0033 Intercept 2 0.125

Max. Lat. 3 111 Slope 3 0.0015 Intercept 3 0.257

Slope 4 0.0009 Intercept 4 0.349

Chamber No. 29 Compression test machine No. 1

(a) Load piston area, A_p 0.1964 ☒ in² ☐ cm²

(b) Volume tube factor, VT_f 0.115 ☒ in³/in ☐ cm³/cm

(c) Drain tube factor, DT_f 0.025 ☒ in³/in ☐ cm³/cm

(d) Temp. corr. coefficent, T_f 0.0115 ☒ in³/°F ☐ cm³/°C

	Applied Lateral press. (lbf/in² / kPa)	Deviator Load (lbf / Newtons)	Axial Specimen Deformation (in / mm)	Volume Tube Reading (in / cm)	Pore Pressure Top (lbf/in² / kPa)	Pore Pressure Bottom (lbf/in² / kPa)	Drain Tube Reading Tube 1 (in / cm)	Drain Tube Reading Tube 2 (in / cm)	Temperature (°F / °C)
	(1)	(2)	(3)	(4)	(5)	(6)	(7)	(8)	(9)
1	0.0	0.0	1.247	9.00	-8.7	-0.1			71.9
2	190.0	37.3	1.259	18.65	17.1	14.8			72.4
3	190.0	37.5	1.212	18.54	17.1	15.1			72.5
4	190.0	508.0	1.163	19.74	38.7	29.0			72.7
5	190.0	694.0	1.111	20.26	60.0	45.9			72.7
6	190.0	784.0	1.060	20.47	76.8	63.0			72.8
7	190.0	820.0	1.007	20.53	86.4	76.4			72.8
8	190.0	861.0	0.911	20.57	92.4	89.7			72.8
9	190.0	914.0	0.807	20.48	92.6	93.4			73.0
10	190.0	914.0	0.797	20.47	92.7	93.5			73.0
11	190.0	923.0	0.713	20.39	91.7	92.9			73.0
12	190.0	957.0	0.610	20.29	89.9	90.6			72.9
13	190.0	987.0	0.505	20.19	87.7	88.0			72.8
14	190.0	991.0	0.411	20.10	85.7	85.4			72.8
15	190.0	1003.0	0.306	20.00	85.4	81.9			72.6
16	190.0	990.0	0.201	19.90	83.2	78.3			72.5
17	0.0	0.0	0.162	13.00	-8.3	-1.7			71.0
18									
19									
20									

GPO 852 - 188

Figure 4. – Triaxial shear test—data sheet 2—example.

7-2369 (10-86) Bureau of Reclamation	PORE AIR PRESSURE COMPUTATION SHEET			Designation USBR 5745.89
SAMPLE NO. 50L - 61	SPECIMEN NO. 3	PROJECT Example	FEATURE Example	
TESTED BY	DATE	COMPUTED BY	DATE	CHECKED BY DATE

The following are definitions for the symbols used below:

V_s = Volume of soil expressed as a decimal

V_w = Volume of water expressed as a decimal

V_a = Volume of air expressed as a decimal

U_s = Pore air pressure at saturation (U_a)

h = The coefficient of air solubility in water by volume according to Henry's Law

$V_{as} = hV_w$ = Volume of Air in solution

γ_d = Dry unit weight of the specimen in lbf/ft³

γ_w = Unit weight of water at 4°C (62.43 lbf/ft³)

γ_{wt} = Unit weight of water at 22.0° C (62.29 lbf/ft³)

G = Specific gravity of the soil.

P_a = 12.0 lbf/ft³ = Averge barometic pressure corrected for altitude at Denver, Co.

U_c at 0% ΔV = _____ lbf/in²

$V_s = \frac{\gamma_d}{G\gamma_w} = \frac{(119.5)}{(2.72)(62.43)} = 0.704$ $\quad V_w = \frac{(w/100)\gamma_d}{\gamma_{wt}} = \frac{(0.126)(119.5)}{62.29} = 0.242$

$V_a = 1.0 - V_s - V_w = 0.054$ $\quad V_{as} = hV_w = (0.02)(0.242) = 0.00484$

$V_a + V_{as} = 0.0588$ $\quad u_s = \frac{P_a V_a}{V_{as}} = \frac{12.0\,(0.054)}{(0.00484)} = 134$

(1) Volume change (ΔV) percent	(2) 12.0 $\left(\frac{\Delta V}{100}\right)$	(3) $V_a + V_{as} - (\Delta V/100)$	(4) Pore Air Pressure (u_a) lbf/in² (2) ÷ (3)	(5) Capillary Pressure (u_c) lbf/in² (graph)	(6) Pore Water Pressure (u_w) lbf/in² (5) + (4)
0.0	0.00	0.059	0.00	-20.0	-20.00
0.5	0.06	0.054	1.11	-17.0	-15.89
1.0	0.120	0.049	2.45	-14.0	-11.55
2.0	0.240	0.039	6.15	-9.5	-3.35
3.0	0.360	0.029	12.41	-5.5	+6.91
4.0	0.480	0.019	25.26	-2.5	22.76
5.0	0.600	0.009	66.67	0.5	66.17
5.5	0.666	0.004	165.00	0.0	165.00
6.0	0.720				
7.0	0.840				
8.0	0.960				
9.0	1.080				
10.0	1.200				
11.0	1.320				
12.0	1.440				
13.0	1.560				
14.0	1.680				

GPO 852 - 187

Figure 5. – Pore air pressure computation sheet—example.

7-2372 (1-89) Bureau of Reclamation

TRIAXIAL SHEAR TEST-DATA SHEET 3

Designation USBR 5745-89

SAMPLE NO.	SPECIMEN NO.	PROJECT	FEATURE
50L-61	3	Example	Example

Initial specimen length (L_o)	Specimen length at start of shear L_s	Initial specimen area ($A_o = V_o \div L_o$)	Initial specimen volume (V_o)
5.000 ☒ in ☐ mm	4.965 ☒ in ☐ mm	3.166 ☒ in² ☐ mm²	15.829 ☒ in³ ☐ mm³

TESTED BY	DATE	COMPUTED BY	DATE	CHECKED BY	DATE

	Applied lateral pressure (from column 1) (10)	Corrected deviator load $P_{dc} = (2) - (10)(A_p)$	Axial specimen deformation* $\Delta L = (3_i) - (3_I)$	Volume tube change* $\Delta VT = (4_i) - (4_I)$	Converted volume tube change $\Delta VT_n = (13) \times (VT_f)$	System volume change due to applied lateral pressure $\Delta VC = [(10) - LTPR] \times SL + Y$	Volume change due to piston movement $\Delta V_p = (12) \times (A_p)$	Volume change due to temperature change $\Delta TV = [(9_i) - (9_I)] \times (T_f)$	Total volume change $\Delta V = (14) + (15) - (16) + (17)$	Specimen volume $V_i = V_o + (18)$	Specimen length $L_i = L_o - (12)$	Axial strain from start of shear $\epsilon = \frac{L_s - (20_i)}{L_s} \times 100$	Volume strain from initial $\epsilon_v = \frac{(18) \times (-1.0)}{V_o} \times 100$	Volume strain from start of shear $\frac{[(19) - (18)\text{at start of shear}] \times (-1.0)}{\text{spec. volume at start of shear}} \times 100$	Effective lateral stress $\sigma 3' = (10) - (6)$ ** (Minor effective principal stress)	Corrected specimen area $A_c = (19)/(20)$	Deviator stress $\sigma_d = (11)/(25)$	Effective axial stress $\sigma_1' = (24) + (26)$ (Major effective principal stress)	Effective Stress ratio $S_r = (27)/(24)$	$p' = [(27) + (24)] \div 2$	$q' = (26)/2$	Effective normal stress $\sigma' = (29) - [(30) \times \sin \phi]$	Shear stress $\tau' = (30) \times \cos \phi$	Top excess pore pressure $\Delta U_{ex} = (5) - (5)$prior to start of shear	Bottom excess pore pressure $\Delta U_{ex} = (6) - (6)$prior to start of shear	Pore pressure coefficient $A = \frac{(33) \text{ or } (34)}{(26)}$
	lbf/in² kPa	lbf kN	in cm	in cm³	in³ cm³	in³ cm³	in³ cm³	in³ cm³	in³ cm³	in³ cm³	in cm	%	%	%	lbf/in² kPa	in² cm²	lbf/in² kPa	lbf/in² kPa		lbf/in² kPa	lbf/in² kPa	lbf/in² kPa	lbf/in² kPa	lbf/in² kPa	lbf/in² kPa	lbf/in² kPa
	(10)	(11)	(12)	(13)	(14)	(15)	(16)	(17)	(18)	(19)	(20)	(21)	(22)	(23)	(24)	(25)	(26)	(27)	(28)	(29)	(30)	(31)	(32)	(33)	(34)	(35)
1	0.0	0.0	0.000	0.00	0.00	0.00	0.000	0.000	0.000	15.829	5.000	—	0.00	—	0.1	3.166	0.0	0.1	1.00	—	—	—	—	—	—	—
2	190.0	0.0	-0.012	-9.65	-1.11	0.420	-0.002	-0.006	-0.694	15.135	5.012	—	4.38	—	175.2	3.020	0.0	175.2	1.00	—	—	—	—	—	—	—
3	190.0	0.2	0.035	-9.54	-1.10	0.420	0.007	-0.007	-0.694	15.135	4.965	0.00	4.38	0.00	174.9	3.048	0.1	175.0	1.00	175.0	0.1	174.9	0.1	0.0	0.3	0.00
4	190.0	470.7	0.084	-10.74	-1.24	0.420	0.016	-0.009	-0.845	14.984	4.916	0.99	5.34	1.00	161.0	3.048	154.4	315.4	1.96	238.2	77.2	197.2	65.4	21.6	14.2	0.092
5	190.0	656.7	0.136	-11.26	-1.29	0.420	0.027	-0.009	-0.906	14.923	4.864	2.03	5.72	1.40	144.1	3.068	214.0	358.1	2.49	251.1	107.0	194.2	90.6	42.9	31.1	0.145
6	190.0	746.7	0.187	-11.47	-1.32	0.420	0.037	-0.010	-0.947	14.882	4.813	3.06	5.98	1.67	127.0	3.092	241.5	368.5	2.90	247.8	120.8	183.6	102.3	59.7	48.2	0.200
7	190.0	782.7	0.240	-11.53	-1.33	0.420	0.047	-0.010	-0.967	14.862	4.760	4.13	6.11	1.80	113.6	3.122	250.7	364.3	3.21	239.0	125.4	172.4	106.2	69.3	61.6	0.246
8	190.0	823.7	0.336	-11.57	-1.33	0.420	0.066	-0.010	-0.986	14.843	4.664	6.06	6.23	1.93	100.3	3.182	258.9	359.2	3.58	229.8	129.5	161.0	109.7	75.3	74.9	0.289
9	190.0	876.7	0.440	-11.48	-1.32	0.420	0.086	-0.013	-0.999	14.830	4.560	8.16	6.31	2.02	96.6	3.252	269.6	366.2	3.79	231.4	134.8	159.8	114.2	79.5	78.6	0.292
10	190.0	876.7	0.450	-11.47	-1.32	0.420	0.088	-0.013	-1.001	14.828	4.550	8.36	6.32	2.03	96.5	3.259	269.0	365.5	3.79	231.0	134.5	159.5	113.9	75.6	78.7	0.293
11	190.0	885.7	0.534	-11.39	-1.31	0.420	0.105	-0.013	-1.008	14.821	4.466	10.05	6.37	2.07	97.1	3.319	266.9	364.0	3.75	230.6	133.5	159.7	113.1	74.6	78.1	0.293
12	190.0	919.7	0.637	-11.29	-1.30	0.420	0.125	-0.012	-1.017	14.812	4.363	12.12	6.42	2.13	99.4	3.395	270.9	370.3	3.73	234.9	135.5	162.9	114.8	72.8	75.8	0.280
13	190.0	949.7	0.742	-11.19	-1.29	0.420	0.146	-0.010	-1.026	14.803	4.258	14.24	6.48	2.19	102.0	3.477	273.1	375.1	3.68	238.6	136.6	166.0	115.7	70.6	73.2	0.268
14	190.0	953.7	0.836	-11.10	-1.28	0.420	0.164	-0.010	-1.034	14.795	4.164	16.13	6.53	2.25	104.6	3.553	268.4	373.0	3.57	238.8	134.2	167.5	113.7	68.6	70.6	0.263
15	190.0	965.7	0.941	-11.00	-1.27	0.420	0.185	-0.008	-1.043	14.786	4.059	18.25	6.59	2.31	108.1	3.643	265.1	373.2	3.45	240.7	132.6	170.2	112.3	68.3	67.1	0.253
16	190.0	952.7	1.046	-10.90	-1.25	0.420	0.205	-0.007	-1.042	14.787	3.954	20.36	6.58	2.30	111.7	3.740	254.7	366.4	3.28	239.1	127.4	171.4	107.9	66.1	63.5	0.249
17	0.0	0.0	1.085	-4.00	-0.46	0.00	0.213	0.010	-0.663	15.166	3.915	21.15	4.19	-0.20	1.7	3.874	0.0	1.7	1.00	1.7	0.0	1.7	0.0	-25.4	-165	—
18																										
19																										
20																										

GPO 838 792

-sign designates start of shear (touch)

*Subscript I denotes initial reading
Subscript i denotes any subsequent reading

**Bottom pore pressure shown; may use top pore pressure value (10) - (5) or average pore pressure, (10) - [[(5) + (6)], ÷ 2)

0 – _____

Figure 6. – Triaxial shear test—data sheet 3—example.

14.6 Verify that volume tube valve B, drain tube valves C and D, and volume tube isolation valve R are open.

14.7 Verify that all remaining valves to the chamber are closed.

14.8 Open drain tube valve F and lower the water in the drain tube to a level about 6 inches (150 mm) above the chamber bottom plate. The water will exit through the chamber bottom plate of the triaxial assembly and it will be necessary to absorb the water with a towel or other appropriate absorbent material.

14.9 Close valve F.

14.10 Open drain tube valve G and lower the water in the drain tube to a level about 2 inches (50 mm) above the chamber bottom plate. The water will exit through the bottom plate of the triaxial assembly and should be wiped up immediately.

14.11 Close valve G.

14.12 Attaching the saturated end plate with porous inserts to the chamber bottom plate follows.

14.12.1 Place the bottom end plate with centering dowel into the centering hole in the center of the chamber bottom plate.

14.12.2 Open valve G slightly to allow a very small amount of water to flow from the drain tube through the fitting. With water flowing, attach the bottom end plate connecting tube to the chamber bottom plate.

14.12.3 Close valve G.

14.12.4 Open valve F slightly to allow a small amount of water to flow from the drain tube through the fitting.

14.12.5 With water flowing, attach the top end plate connecting line to the chamber bottom plate.

14.12.6 Do not close valve F because this prevents cavitation of the system and keeps the top end plate porous insert moist.

14.13 Apply a small amount of silicon grease to the sides of the top and bottom end plates to aid in sealing the specimen membrane to the end plates.

14.14 Obtain a precut circular piece of No. 200 (75 μm) mesh screen. Spray the screen with a silicon mold release.

14.15 Place the screen on top of the bottom end plate. The purpose of the screen is to ensure a "break line" between the soil and the bottom end plate porous insert so that pore air pressure is measured.

14.16 Placing and sealing the soil specimen on the end plates follows.

14.16.1 Obtain a specimen prepared in accordance with either USBR 5210 or 5215. At this point, the specimen should be enclosed in a membrane with caps on both ends with the membrane sealed to the caps with O-rings.

14.16.2 Remove the O-rings from both ends of the specimen.

14.16.3 Roll the membrane from the end cap on one end of the specimen and remove the end cap from that end of the specimen — either end may be used unless otherwise specified.

14.16.4 Place the test specimen on the bottom end plate. Roll the membrane down over the sides of the bottom end plate.

14.16.5 Place two O-rings, of appropriate size, on the bottom of the O-ring expander. Position the expander around the specimen with the bottom of the expander around the middle of the bottom end plate. Roll the O-rings into position around the end plate to seal the membrane.

14.16.6 Remove the expander from around the specimen.

14.16.7 Place two O-rings on the top end of the O-ring expander. Position the expander at approximately midheight of the test specimen with the top of the expander near the middle of the top end plate.

14.16.8 Remove the O-rings from the top end cap. Roll the membrane down from the top of the specimen and remove the end cap.

14.16.9 Blot any excess water from the surface of the porous insert in the top end plate and close valve F.

14.16.10 Carefully place the top end plate into position on top of the test specimen.

14.16.11 Roll the membrane up over the sides of the top end plate. Roll the O-rings from the expander onto the membrane so the membrane seals against the middle of the top end plate. Remove the expander from around the specimen.

NOTE 5.–The expander is split into halves and is hinged on one side to facilitate removal from around the specimen.

14.17 Ensure that the pore water pressure measuring system for the top end plate does not cavitate. The end plate control injector is to be used to maintain a water pressure not lower than about minus 8.0 lbf/in^2 (–55.2 kPa).

14.18 Lightly grease the upper and lower ends of the chamber.

14.19 Carefully place the chamber into position in the groove in the chamber bottom plate.

14.20 Attach a hose from the de-aired water source to the de-aired water source (valve N) line and begin filling the chamber through the chamber bottom plate with de-aired water. As water rises in the chamber, use a squeeze bulb to remove any air bubbles that may be present on the bottom and sides of the chamber and specimen.

14.21 Fill the chamber completely with de-aired water. Close valve N.

14.22 Open valve A and set the chamber cap in place. Force the chamber cap down onto the chamber until it is properly seated.

14.23 Open valve N and continue filling the chamber with de-aired water until water flows out of chamber cap relief valve A. Close valve A and continue filling so that any air remaining in the system is forced up through the ball bushing.

14.24 When water flows out the ball bushing, close valve N.

14.25 Screw the chamber bolts into the chamber bottom plate and set the chamber cap hold down plate into place.

14.26 Secure the chamber cap to the chamber bottom plate by screwing the four nuts onto the four chamber bolts; tighten the nuts in a staggered sequence to about 50 ft-lbf torque.

14.27 Lightly grease the piston, open valve A, and carefully push the piston through the ball bushing in the

center of the chamber cap until the piston tip fits into the socket in the top end plate. Check that the piston is firmly in contact with the top end plate, but does not apply excessive pressure to the specimen (by feel). Close valve A.

14.28 Attach the axial deformation indicator (fig. 1) and adjust its range so that deformation of the test specimen can be recorded.

14.29 Open valves L and K to the differential pressure transducer.

14.30 Attach and secure the piston retainer bar. Be careful not to disturb the specimen. The purpose of the piston retainer bar is to prevent the piston from being forced out of the chamber when lateral pressure is applied inside the chamber.

14.31 Open valve A. Slowly open volume tube valve E until water flows out of chamber cap relief valve A. When the level of water in the volume tube has reached the desired level for starting the test — usually the 10-inch (250-mm) level — close valve A.

NOTE 6.–The desired volume tube water level is dependent on the volume change potential of the soil being tested. For test specimens whose anticipated volume change is slight, the volume tube can be filled to a higher level than for test specimens whose anticipated volume change is great.

14.32 Make sure the air pressure regulator is set to zero and attach the air pressure hose to the top of the volume tube. Carefully place the triaxial assembly in the compression test machine.

14.33 Align the load cell with the load transfer piston (fig. 1). Ensure that the load transfer piston is just in contact with the piston top plate. Level the load frame cross head and lock it into place.

14.34 Read and record:

Initial applied lateral pressure	Top and bottom pore pressure readings
Deviator load reading	Tube 1 and tube 2 drain tube readings
Axial specimen deformation reading	Chamber fluid temperature
Volume tube reading	Date

as shown on figure 4 (data sheet 2).

NOTE 7.–It is not necessary to read the drain tubes since this is a sealed test and no drainage is permitted.

14.35 Apply the desired lateral pressure slowly. For partially saturated specimens, compute the percent volume change and plot pore air and pore water pressures as outlined in appendix X4 (see figs. 5 and 7).

14.36 When the desired lateral pressure has been applied, allow the specimen to stabilize for a period of time. The length of time depends on how quickly the pore pressure and volume change readings stabilize (no change for at least 30 minutes). Read and record:

Lateral pressure	Volume tube
Deviator load	Top and bottom pore pressures
Specimen deformation	Chamber fluid temperature

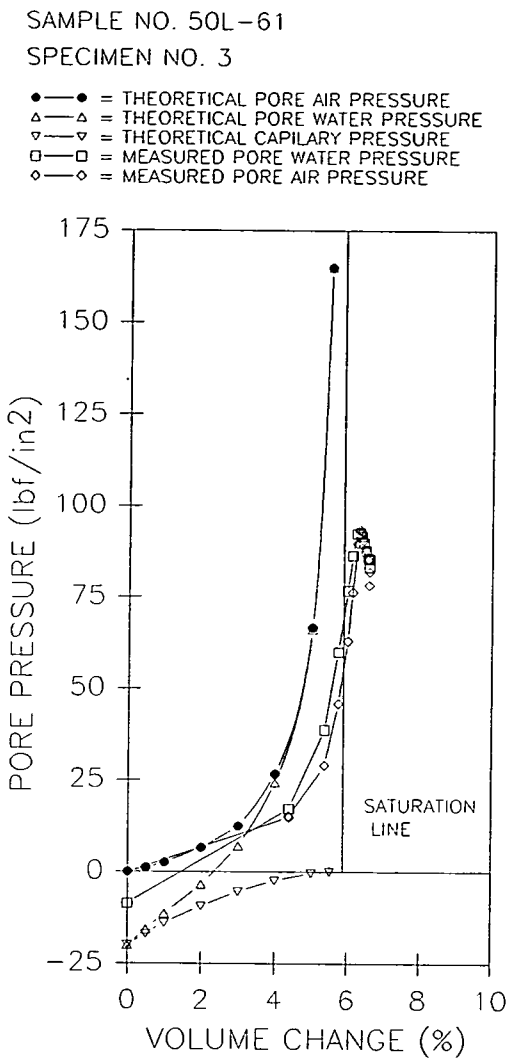

Figure 7. – Pore air and pore water pressure versus percent volume change—example.

14.37 Determine the "touch" point.

14.37.1 Compute deviator load due to applied lateral pressure.

NOTE 8.– Deviator load due to applied lateral pressure is based on the area of the piston. The piston area [item (a) from "Triaxial Shear Test – Data Sheet 2, fig. 4] is mulitiplied by the applied lateral pressure to obtain the force the piston exerts on the load cell. This force is subtracted from the deviator load to obtain the actual axial force applied to the specimen.

14.37.2 Begin the test by applying axial load to the piston. When the deviator load reading just equals deviator load due to applied lateral pressure (corrected deviator load equals zero), stop the piston movement. This is "touch" point — the point at which the piston just contacts the top end plate on the specimen.

14.37.3 When "touch" has been established, determine and record all values as described in subparagraph 14.36. Place a minus sign in the left hand margin of data

sheet 2 (fig. 4) directly opposite the data line at which "touch" was obtained. The minus sign serves as an easy reference as to when "touch" was achieved.

14.38 *Rate of Loading.*–The specimen may be compressed in one of two manners, either (1) by controlling the rate of applied axial compressive stress or (2) by controlling the rate of axial strain.

14.38.1 Controlled rate of axial stress:

14.38.1.1 Axial load is applied to the specimen in such a manner that the rate of stress increase is constant.

14.38.1.2 The axial stress application rate should be based on field conditions being modeled in the laboratory.

14.38.2 Controlled rate of axial strain:

14.38.2.1 If the specimen is to be compressed at a controlled rate of axial strain, a rate of 0.04-percent per minute should be used unless otherwise specified in the testing request. Table 4 lists recommended displacement rates and strain rates for various specimen dimensions.

Table 4. – Recommended displacement and strain rate for various test specimen sizes.

Test specimen size				Displacement rate		Strain rate
Diameter in	Height in	Diameter mm	Height mm	in/min	mm/min	%strain
2.0	5.0	50.8	127.0	0.002	0.051	0.04
2.8	7.0	71.1	177.8	.003	.076	.04
6.0	15.0	152.4	381.0	.006	.152	.04
9.0	22.5	228.6	571.5	.009	.229	.04

14.39 *Data Aquisition Rate*:

14.39.1 If an automatic data aquisition system is used, data readings should be recorded at 0.20-percent axial strain intervals as shown in table 5.

Table 5. – Data collection intervals for various test specimen sizes.

Test specimen size				Data collection interval		
Diameter in	Height in	Diameter mm	Height mm	in	mm	% strain
2.0	5.0	50.8	127.0	0.010	0.254	0.20
2.8	7.0	71.1	177.8	.014	0.356	.20
6.0	15.0	152.4	381.0	.030	0.762	.20
9.0	22.5	228.6	571.5	.045	1.143	.20

14.40 *Compressive Stress Application*:

14.40.1 Single stage compression of multiple specimens (standard procedure):

14.40.1.1 Start loading the specimen at the prescribed rate; determine and record all parameters at the recommended interval.

14.40.1.2 Continue loading the specimen until axial strain equals 20 percent.

NOTE 9.–Due to data acquisition system restraints in the Bureau's geotechnical laboratory in Denver, Colorado, the triaxial test may be continued until axial strain is approximately 20 percent. However, it may be appropriate to discontinue the test at some other point if possible, such as 5-percent axial strain past maximum deviator stress.

14.40.1.3 When loading is complete, stop the compression test machine; unload the specimen until the load indicator registers zero.

14.40.2 Multistage compression of single specimen (optional procedure):

14.40.2.1 Start loading the specimen at the prescribed rate; determine and record all parameters at the recommended interval.

14.40.2.2 Compute, plot, and monitor the stress difference (deviator stress), axial strain, and effective stress ratio.

14.40.2.3 Continue loading the specimen until one of the following criteria are met.

14.40.2.3.1 Axial strain equals 5 percent (20% at final lateral pressure).

14.40.2.3.2 Stress difference or effective stress ratio curve starts to peak or flatten out.

14.40.2.4 When the criteria stated in subparagraph 14.40.2.3 are satisfied, stop the compression test machine and unload the specimen until the load indicator registers zero.

14.40.2.5 Apply the next lateral pressure and repeat the procedure beginning at subparagraph 14.35.

14.41 Carefully release the lateral pressure. Close all valves to the chamber. Open valve A. Attach the drain tube to valve N, open valves N and R and drain the water from the chamber.

14.42 Engage the controls on the compression test machine which allow manual control of the loading device. Back the load transfer piston away from the load cell.

14.43 Dismantle the triaxial assembly.

14.44 Photograph the specimen while it is still on the chamber bottom plate with the end plates attached.

14.45 Release the membrane from the top and bottom end plates by moving or removing the O-rings and rolling the ends of the membrane off of the end plates.

14.46 Carefully remove the specimen from the end plates.

14.47 Carefully remove the membrane from the specimen.

14.48 Photograph the specimen with the membrane removed.

14.49 Determine the moisture content of the test specimen, in accordance with USBR 5300, using the entire specimen or a representative portion taken along the entire length of the specimen.

14.50 For single stage compression of multiple specimens, repeat UU triaxial shear tests on new specimens at specified lateral pressures until at least three specimens have been tested and resulting data have been recorded.

15. Calculations

15.1 Perform all calculations on "Triaxial Shear Test — Data Sheet 3" (fig. 6) as specified, and record in the appropriate columns.

15.2 All calculations are based on data recorded on data sheets 1 and 2 (figs. 3 and 4).

15.2.1 Enter the following information on the heading of figure 6 (data sheet 3):
Sample No.,
Specimen No.,
Initial specimen volume (V_o) (from fig. 6, data sheet 1),
Initial specimen length (L_o) (from data sheet 1), and
Compute the initial specimen area (A_o) by dividing V_o by L_o.

15.2.2 *Applied lateral pressure* [fig. 6, col. (10)] is the applied lateral pressure from figure 4, [data sheet 2, col. (1)].

15.2.3 *Corrected deviator load* [col. (11)] is the deviator load corrected for the upward force due to lateral pressure acting on the piston.

$$P_{dc} = P_d - (A_p\ \sigma_3) \quad (1)$$

where:
P_{dc} = corrected deviator load, lbf
P_d = deviator load, lbf
A_p = load piston area, in²
σ_3 = applied lateral pressure, lbf/in²

15.2.4 *Axial specimen deformation* [col. (12)] is calculated.

$$\Delta L = L_1 - L_i \quad (2)$$

where:
ΔL = axial specimen deformation (change in specimen length), in
L_1 = initial axial deformation indicator reading, in
L_i = subsequent axial deformation indicator reading, in

15.2.5 *Volume tube change* [col. (13)] is the change in fluid level (linear units) in the volume tube.

$$\Delta VT = VT_1 - VT_i \quad (3)$$

where:
ΔVT = volume tube change, in
VT_1 = initial volume tube reading, in
VT_i = subsequent volume tube reading, in

15.2.6 *Converted volume tube change* [col. (14)] is the volume tube converted from linear to volumetric units.

$$\Delta VT_n = \Delta VT\ (VT_f) \quad (4)$$

where:
ΔVT_n = converted volume tube change, in³
ΔVT = volume tube change, in
VT_f = volume tube factor from USBR 1455, in³/in

15.2.7 *System volume change due to applied lateral pressure* [col. (15)] is the expansion or contraction of the triaxial system (in cubic inches) due to a change in applied lateral pressure (see fig. 8).

$$\Delta VC = [(\sigma_3 - LTPR_i)]\ (SL_i) + Y_i \quad (5)$$

where:
ΔVC = system volume change, in³
σ_3 = applied lateral pressure, lbf/in²

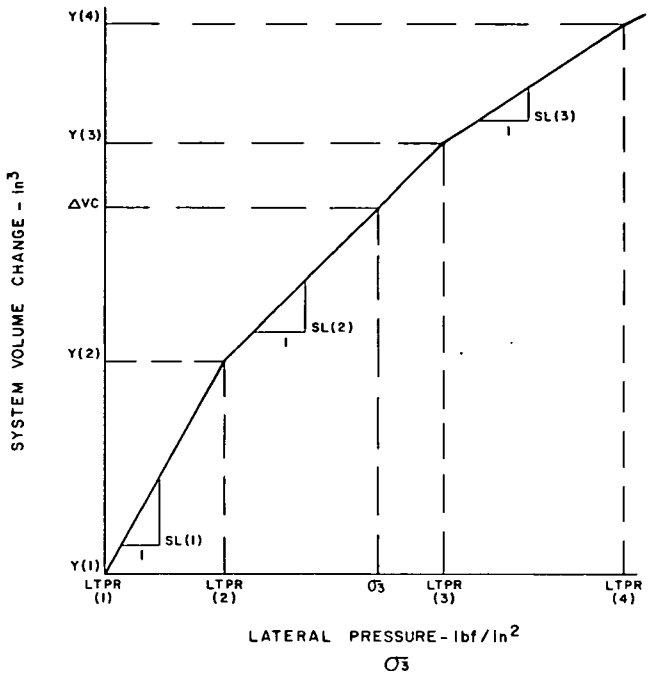

Figure 8. - Volume change of system due to applied lateral pressure.

$LTPR_i$ = lateral pressure intercept for lateral pressure increment considered, lbf/in²
SL_i = slope of line relating system volume change to applied lateral pressure for pressure increment considered, in³/(lbf/in²)
Y_i = volume change intercept for lateral pressure increment considered, in³

NOTE 10.- A curve for system volume change versus lateral pressure must be developed for each triaxial shear test system and is unique for that particular system, see figure 8. This curve is developed when the triaxial shear test system is calibrated.

15.2.8 *Volume change due to piston movement* [col. (16)] is due to displacement of water by piston entry into the chamber.

$$\Delta V_p = \Delta L\ (A_p) \quad (6)$$

where:
ΔV_p = volume change due to piston movement, in³
ΔL = actual specimen deformation (change in specimen length), in
A_p = load piston area, in²

15.2.9 *Volume change due to temperature change* [col. (17)] is the change of the entire triaxial assembly and confining fluid in the chamber due to temperature change.

$$\Delta TV = T_f\ (T_1 - T_i) \quad (7)$$

where:
ΔTV = volume change due to temperature change, in³
T_f = temperature correction coefficient, in³/°F

T_1 = initial temperature reading of water in chamber, °F
T_i = subsequent temperature reading of water in chamber, °F

See appendix X1 for derivation of the temperature correction coefficient.

15.2.10 *Total volume change* [col. (18)] is calculated.

$$\Delta V = \Delta VT_n + \Delta VC - \Delta V_p + \Delta TV \quad (8)$$

where:
ΔV = total volume change, in³
ΔVT_n = converted volume tube change, in³
ΔVC = system volume change due to applied lateral pressure, in³
ΔV_p = volume change due to piston movement, in³
ΔTV = volume change due to temperature change, in³

15.2.11 *Specimen volume* [col. (19)] is the volume of the specimen at any subsequent point during the test.

$$V_i = V_o + \Delta V \quad (9)$$

where:
V_i = subsequent specimen volume, in³
V_o = initial specimen volume, in³
ΔV = total volume change, in ³

15.2.12 *Specimen length* [col. (20)] is the length of specimen at any subsequent point during the test.

$$L_i = L_o - \Delta L \quad (10)$$

where:
L_i = subsequent specimen length, in
L_o = initial specimen length, in
ΔL = axial specimen deformation (change in specimen length), in

15.2.13 *Axial strain from start of shear*, ϵ [col. (21)] is calculated.

$$\epsilon = 100 \left(\frac{L_s - L_i}{L_s} \right) \quad (11)$$

where:
ϵ = axial strain from start of shear, %
L_s = specimen length at start of shear, in
L_i = subsequent specimen length, in
100 = convert from decimal to percent, %

15.2.14 *Volume strain from initial*, ϵ_v [col. (22)] is the volumetric strain, in percent of initial specimen volume.

$$\epsilon_v = 100 \left[\frac{\Delta V (-1)}{V_o} \right] \quad (12)$$

where:
ϵ_v = volume strain, %
ΔV = total volume change, in³
-1 = constant to establish sign convention where positive values indicate compression and negative values indicate expansion
V_o = initial specimen volume, in³
100 = convert from decimal to percent

15.2.15 *Volume strain from start of shear*, ϵ_{vs} [col. (23)] is the volumetric strain in percent of specimen volume.

$$\epsilon_{vs} = 100 \left[\frac{(V_i - V_{is})\ (-1.0)}{V_{is}} \right] \quad (13)$$

where:
ϵ_{vs} = volume strain from start of shear, %
V_i = specimen volume at a subsequent reading, in³
V_{is} = specimen volume at start of shear, in³
-1.0 = constant to establish sign convention where positive values indicate compression and negative values indicate expansion
100 = convert from decimal to percent, %

15.2.16 *Effective lateral stress* [col. (24)] is calculated.

$$\sigma_3' = \sigma_3 - u \quad (14)$$

where:
σ_3' = effective lateral stress (minor effective principal stress), lbf/in²
σ_3 = applied lateral pressure, lbf/in²
u = pore pressure, either top (u_w) or bottom (u_a) pore pressures may be used or an average of the two depending on the test condition being modeled, lbf/in²

15.2.17 *Corrected specimen area* [col. (25)] is calculated.

$$A_c = \frac{V_i}{L_i} \quad (15)$$

where:
A_c = corrected specimen area, in²
V_i = specimen volume at a subsequent reading, in³
L_i = specimen length at same subsequent reading, in

15.2.18 *Deviator stress*, σ_d [col. (26)] is calculated.

$$\sigma_d = \frac{P_{dc}}{A_c} \quad (16)$$

where:
σ_d = deviator stress, lbf/in²
P_{dc} = corrected deviator load at a given reading, lbf
A_c = corrected specimen area at same given reading, in²

15.2.19 *Effective axial stress* [col. (27)] is calculated.

$$\sigma_1' = \sigma_3' + \sigma_d \quad (17)$$

where:
σ_1' = effective axial stress (major effective principal stress), lbf/in²
σ_3' = effective lateral stress (minor effective principal stress), lbf/in²
σ_d = deviator stress, lbf/in²

15.2.20 *Effective stress ratio* [col. (28)] is calculated.

$$S_r = \frac{\sigma_1'}{\sigma_3'} \quad (18)$$

where:

S_r = effective stress ratio, dimensionless
σ_1' = effective axial stress (major effective principal stress), lbf/in²
σ_3' = effective lateral stress (minor effective principal stress), lbf/in²

15.3 *p - q Diagram.*-A convenient method of plotting the state of stress, for a given soil specimen, is to plot stress points on a $p - q$ diagram. The coordinate system for the $p - q$ diagram may be defined in terms of total or effective stress as follows:

Total stress	*Effective stress*
$p = \frac{(\sigma_1 + \sigma_3)}{2}$	$p' = \frac{(\sigma_1' + \sigma_3')}{2}$
$q = \frac{(\sigma_1 - \sigma_3)}{2} = \frac{\sigma_d}{2}$	$q' = q = \frac{\sigma_d}{2}$

where:

σ_1 = major principal stress, lbf/in²
σ_3 = minor principal stress, lbf/in₂
σ_d = deviator stress, lbf/in²
σ_1' = major effective principal stress, lbf/in²
σ_3' = minor effective principal stress, lbf/in²

15.3.1 Record the calculated values of p' and q' or p and q in columns 29 and 30, respectively, on data sheet 3 (fig. 6).

15.3.2 Repeat calculations described in subparagraphs 15.2.2 through 15.3.1 for all recorded data for all specimens.

15.3.3 For each specimen tested (minimum of 3), select an appropriate failure stress and locate corresponding $p' - q'$ or $p - q$ values which are referred to as p_f', q_f' or p_f, q_f.

15.3.3.1 Failure of the test specimen may be defined in several ways:

- First maximum or maximum principal effective stress ratio (σ_1'/σ_3') maximum
- First maximum or maximum deviator stress (σ_d) maximum
- Shear stress at a prescribed axial strain
- Any other criteria consistent with the condition being analyzed

15.3.4 Plot all calculated values of $p' - q'$ or $p - q$ for each specimen as shown on figure 9.

15.3.4.1 Connect the respective stress points for each specimen with a line or curve as shown on figure 9. This curve is a continuous representation of successive states of stress to which the specimen was subjected during testing and is called a "stress path."

15.3.5 Fit a straight line through the stress points corresponding to failure ($p_f' - q_f'$) on the $p - q$ diagram; use either a visual best fit or a mathematical fitting technique such as linear regression. This line is the K_f-line. Determine and draw the K_f-line (fig. 9).

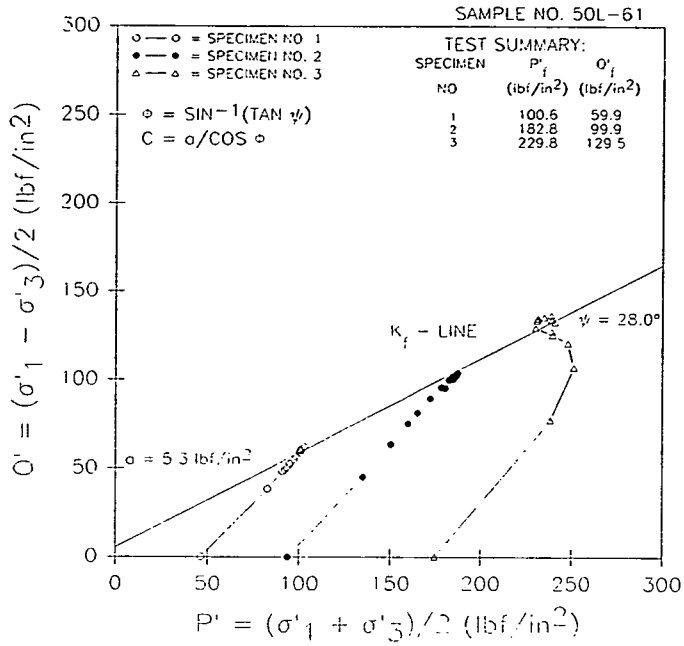

Figure 9. - $p' - q'$ diagram—example.

NOTE 11.-The K_f-line can be determined by performing a linear regression analysis of stress points at failure.

15.3.5.1 The equation of the K_f-line is of the linear form $y = mx + b$. It is defined for effective stress conditions as follows:

$$q_f' = a + p_f' (\tan \psi) \qquad (19)$$

where:

q_f' = q' at failure, lbf/in²
p_f' = p' at failure, lbf/in²
a = intercept of the K_f-line on the q-axis, lbf/in²
$\tan\psi$ = slope of the K_f-line, (dimensionless)
ψ = angle of the K_f-line with respect to horizontal, degrees

15.4 *Mohr-Coulomb Effective Stress Shear Strength Parameters.*-The equation for the Mohr-Coulomb failure envelope, as shown on figure 10, is similar to that of the K_f-line in that both are linear. There are relationships from which effective stress shear strength parameters may be calculated using the parameters obtained from the $p - q$ diagram.

15.4.1 *Effective angle of internal friction, ϕ',* is the angle the Mohr-Coulomb failure envelope makes with the horizontal and may be calculated using the relationship between the K_f-line and the Mohr-Coulomb failure envelope.

$$\sin \phi' = \tan \psi \qquad (20)$$
$$\phi' = \sin^{-1} (\tan \psi)$$

where ϕ' equals effective angle of internal friction, degrees.

15.4.1.1 Calculate the effective angle of internal friction, ϕ', using the equation in subparagraph 15.4.1 and the value for tan ψ from subparagraph 15.3.5.1.

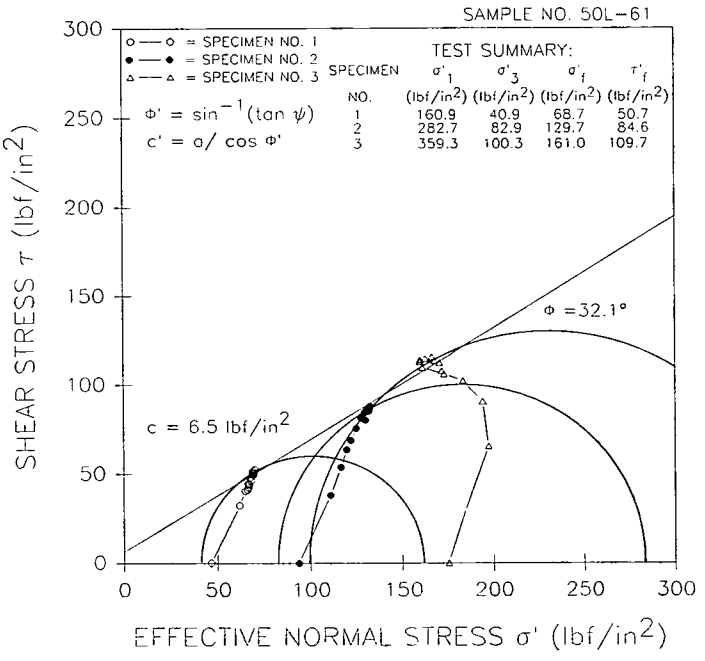

Figure 10. - Mohr's diagram—example.

15.4.2 *Effective cohesion*, c' is the shear stress intercept of the Mohr-Coulomb failure envelope. Cohesion may be calculated using the relationship between the K_f-line and the Mohr-Coulomb failure envelope.

$$c' = \frac{a}{\cos \phi'} \tag{21}$$

where:
c' = effective cohesion, lbf/in²
a = intercept of the K_f-line on the q'-axis, lbf/in²

15.4.2.1 Calculate the effective cohesion, c' using the equation in subparagraph 15.4.2 and the values for a and ϕ' from subparagraphs 15.3.5.1 and 15.4.1.1.

15.5 *Effective Stresses on Failure Plane*.-The effective normal stress, σ', and the shear stress, τ, that develop on the failure plane during shear may be calculated at any reading for each of the specimens tested.

15.5.1 *Effective normal stress*, σ', for each reading for each specimen using corresponding values of p', q', and ϕ' from data sheet 3 (fig. 6), subparagraphs 15.3.1 and 15.4.1, respectively, is calculated.

$$\sigma' = p' - q' \ (\sin \phi') \tag{22}$$

where σ' equals effective normal stress, lbf/in².

15.5.1.1 Record values for σ' on figure 6 [data sheet 3, col. (31)].

15.5.2 *Shear stress*, τ, for each reading for each specimen using corresponding values of q' and ϕ' from fig. 6 (data sheet 3), subparagraphs 15.3.3 and 15.4.1, respectively, is calculated.

$$\tau' = q' \ (\cos \phi') \tag{23}$$

where τ' equals shear stress, lbf/in².

15.5.2.1 Record values for τ on figure 6 [data sheet 3 col. (32)].

15.6 *Mohr's Diagram*.-A Mohr's circle can be constructed for every state of stress to which a specimen is subjected. However, the state of stress most often represented is the condition at failure (subpar. 15.3.5.1). The circle at failure is defined by the principal stresses which caused failure and the resulting normal and shear stresses on the failure plane.

15.6.1 Plot the Mohr's circle at failure for each specimen as shown on figure 10.

15.6.1.1 The center of each Mohr's circle is located using the p' value from figure 6 [data sheet 3 col. (29)] corresponding to the selected failure point.

$$p_f' = \frac{\sigma_{1f}' + \sigma_{3f}'}{2} \tag{24}$$

where:
p_f' = p' at failure, lbf/in²
σ_{1f}' = major effective principal stress at failure, lbf/in²
σ_{3f}' = minor effective principal stress at failure, lbf/in²

15.6.1.2 The radius of the Mohr's circle is equal to q_f' for for the selected failure point from figure 6 [data sheet 3 col. (30)].

$$q_f' = \frac{\sigma_{df}}{2} \tag{25}$$

where:
q_f' = q' at failure, lbf/in²
σ_{df} = deviator stress at failure, lbf/in²

15.6.2 Locate the center of each circle on the same plot of shear stress versus effective normal stress and draw each circle using the corresponding radius (fig. 10).

15.6.3 Locate, and include on the Mohr's diagram, the Mohr-Coulomb failure envelope defined by the effective stress shear strength parameters ϕ' and c' as determined in subparagraphs 15.4.1.1 and 15.4.2.1, respectively (fig. 10).

15.6.4 Plot the effective normal stress [col. (31)] and shear stress [col. (32)] for each reading from figure 6 (data sheet 3) for each specimen on the Mohr diagram. Connect the respective points for each specimen with a line or curve (fig. 10). This curve is called a "vector curve."

15.7 *Top Excess Pore Pressure* [col. (33)].-The top excess pore pressure is:

$$\Delta u_{et} = u_{it} - u_{ptt} \tag{26}$$

where:
Δu_{et} = top excess pore pressure, lbf/in²
u_{it} = top pore pressure at a given point, lbf/in²
u_{ptt} = top pore pressure prior to touch, lbf/in²

15.8 *Bottom Excess Pore Pressure* [col. (34)].-The bottom excess pore pressure is:

$$\Delta u_{eb} = u_{ib} - u_{ptb} \tag{27}$$

where:
Δu_{eb} = bottom excess pore pressure, lbf/in²
u_{ib} = bottom pore pressure at a given point, lbf/in²
u_{ptb} = bottom pore pressure prior to touch, lbf/in²

15.9 *Pore Pressure Coefficient*, $\bar{A}$, [col. (35)].–The pore pressure coefficient, $\bar{A}$, for a saturated UU or CU test specimen is derived.

$$\bar{A} = \frac{\Delta u - \Delta\sigma_3}{\Delta\sigma_1 - \Delta\sigma_3} \quad (28)$$

where:

$\bar{A}$ = pore pressure coefficient, dimensionless
Δu = change in pore pressure, lbf/in²
$\Delta\sigma_3$ = change in lateral pressure, lbf/in²
$\Delta\sigma_1$ = change in major principal stress, lbf/in²

In an ordinary compression test $\Delta\sigma_3 = 0$ since the cell (confining or lateral) pressure is held constant throughout the test. The equation then takes the form:

$$\bar{A} = \frac{\Delta u}{\Delta\sigma_d} \quad (29)$$

where:

$\bar{A}$ = pore pressure coefficient, dimensionless
Δu = corresponding change in pore pressure (bottom pore pressure normally used), lbf/in²
$\Delta\sigma_d$ = change in deviator stress, lbf/in²

15.10 Plot percent axial strain [col. (21)] versus deviator stress [col. (26)] from figure 6 (data sheet 3) for each specimen tested as shown on figure 11.

15.11 Plot percent axial strain (data sheet 3, fig. 6, col. 21) versus excess pore air and pore water pressures (cols. 5 and 6, data sheet 2, fig. 4) as shown on figure 12. Pore pressure readings from bottom porous insert (col. 6) correspond to pore air pressure.

15.12 Plot percent axial strain [col. (21)] versus volume strain (col. 22) from figure 6 (data sheet 3) for each specimen tested as shown on figure 13.

15.13 Plot percent axial strain (col. 21) versus effective stress ratio (col. 28) from figure 6 (data sheet 3) for each specimen tested as shown on figure 14.

16. Report

16.1 The report is to consist of the following completed and checked forms:

"Specimen Placement—Data Sheet 1" (fig. 3).
"Triaxial Shear Test—Data Sheet 2" (fig. 4).
"Pore Air Pressure Computation Sheet" (fig. 5).
"Triaxial Shear Test—Data Sheet 3" (fig. 6).

16.2 Data plots are required as follows:

"Pore Air and Pore Water Pressure versus Percent Volume Change" (fig. 7).
"p' - q' Diagram" (fig. 9).
"Mohr's Diagram" (fig. 10).
"Percent Axial Strain Versus Deviator Stress" (fig. 11).
"Percent Axial Strain Versus Excess Pore Pressure" (fig. 12).
"Percent Axial Strain versus Volume Strain" (fig. 13).
"Percent Axial Strain versus Effective Stress Ratio" (fig. 14).

16.3 All calculations are to show a checkmark and all plotting must be checked

17. Background Reference

Engineering and Design Laboratory Soil Testing EM 1110-2-1906, Department of the Army, Office of the Chief Engineers, Washington, D.C. 20314, November 1970.

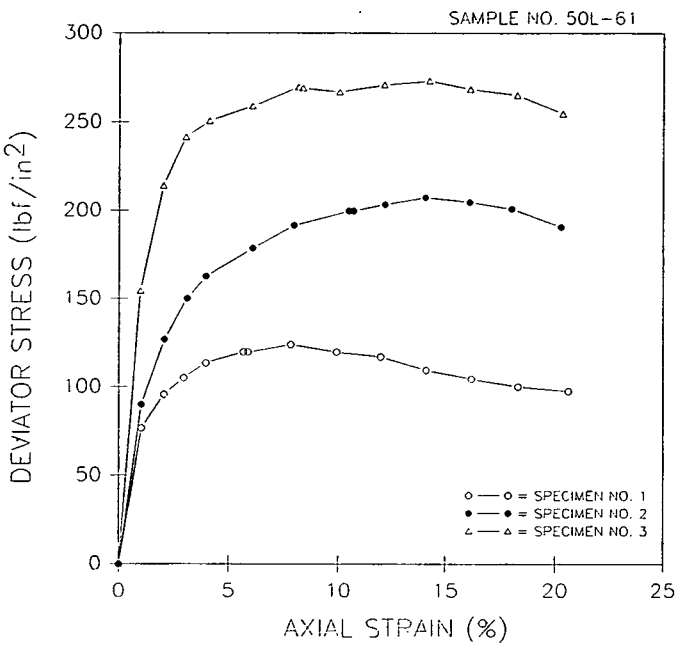

Figure 11. – Percent axial strain versus deviator stress—example.

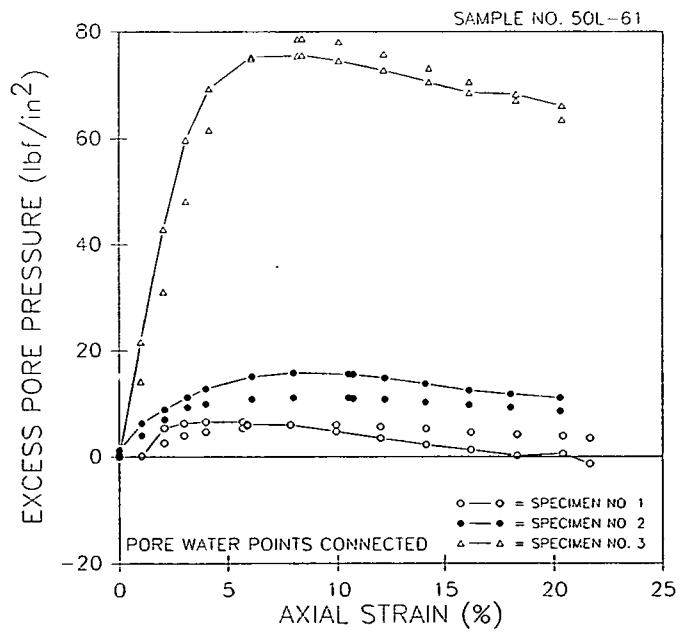

Figure 12. – Percent axial strain versus excess pore pressure—example.

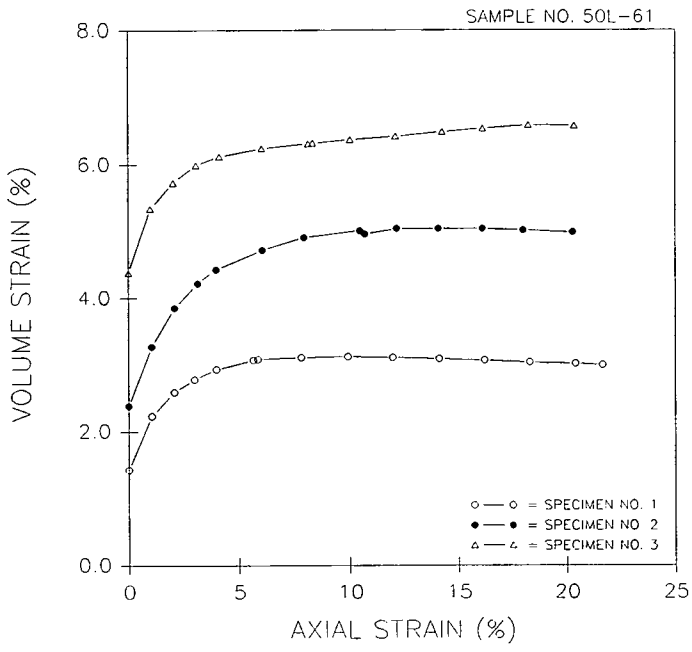

Figure 13. – Percent axial strain versus percent volume strain—example.

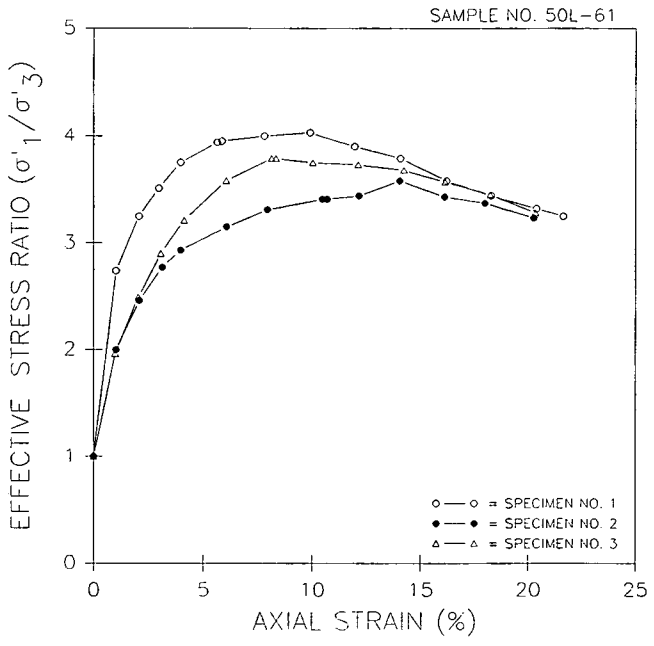

Figure 14. – Percent axial strain versus effective stress ratio—example.

APPENDIX

X1. DETERMINING THE TEMPERATURE CORRECTION COEFFICIENT FOR WATER-FILLED TRIAXIAL ASSEMBLY

X1.1 Scope

X1.1.1 When performing triaxial shear tests, there are occasions when changes in ambient temperature can occur. These ambient temperature changes can affect the volume of the water used for monitoring volume change of the specimen during testing. This appendix presents a method for determining a temperature correction coefficient for computing correct specimen volume.

X1.2 Summary of Method

X1.2.1 A triaxial assembly is de-aired and filled with de-aired water. A thermometer or thermocouple is inserted into the water in the chamber. The triaxial assembly is placed in a location where the ambient temperature can be varied from approximately 65 to 75 °F. The ambient temperature is allowed to drop slowly to the lower limit of the ambient temperature range over a period of 8 to 12 hours. Then, the assembly is relocated into an environment where the ambient temperature will cause the temperature of the triaxial assembly to increase approximately 10 to 15 °F over a period of 6 to 8 hours. The temperature of the water in the triaxial assembly is measured and recorded to the nearest 0.1 °F and the water level in the volume tube is read and recorded to 0.01 inch. The data are used to compute the temperature correction coefficient for the assembly in cubic inch per degree Farenheit (cubic centimeter per degree Celsius).

NOTE X1.1–When determining this coefficient, the top and bottom end plates are removed from the triaxial assembly since no specimen is placed in the chamber. Pipe plugs are screwed into the chamber bottom plate where the top and bottom end plate lines had been attached.

NOTE X1.2–It is recommended that three trials be performed on an assembly to determine an average temperature correction coefficient. Since the volume of water in an assembly is one of the independent variables in determining the coefficient, the volume of water in an assembly should not be changed during the trials and a temperature correction coefficient should be determined for each different size triaxial assembly.

X1.3 Preparation of Apparatus

X1.3.1 De-airing the triaxial assembly (fig. 1):

X1.3.1.1 Place the chamber into the groove in the bottom plate.

X1.3.1.2 Verify that all the valves in the system are closed.

X1.3.1.3 Fill the chamber about one-half full with de-aired water.

X1.3.1.4 Open triaxial chamber cap relief valve A.

X1.3.1.5 Set the chamber cap in place, and force the cap down onto the chamber until it is properly seated.

X1.3.1.6 Insert the piston through the ball bushing until the piston flange is resting on top of the chamber cap.

X1.3.1.7 Open valve B to the top of the volume tube.

X1.3.1.8 Attach vacuum hoses to valve B on top of the volume tube and to the fitting on the chamber cap relief valve A.

X1.3.1.9 Attach the other ends of the vacuum hoses to a multiport manifold on the vacuum pump. Turn on the vacuum pump.

X1.3.1.10 Apply a vacuum of about 20 lbf/in² (140 kPa) for 5 minutes.

X1.3.1.11 Release the vacuum from the chamber (at valve A) by uncoupling the vacuum line at the vacuum pump. Maintain the vacuum on the volume tube.

X1.3.1.12 Open volume tube drain valve E and volume tube isolation valve R, and fill the volume tube to the top of its marking with de-aired water from the chamber (vacuum is still on the volume tube).

X1.3.1.13 Close volume tube drain valve E.

X1.3.1.14 Release the vacuum from the volume tube by uncoupling the appropriate vacuum line at the vacuum pump.

X1.3.1.15 Plug the vacuum hose that attaches to the chamber at relief valve A into the vacuum source.

X1.3.1.16 Open valve E and allow the water level in the volume tube to drop to about the 25-inch (635-mm) level.

X1.3.1.17 Close volume tube drain valve E.

X1.3.1.18 Reattach the vacuum hose to the top of the volume tube. Uncouple the vacuum hose to valve A.

X1.3.1.19 Displace water back and forth between the volume tube and the chamber by repeating subparagraphs X1.3.1.12 through X1.3.1.18 until air bubbles can not be seen in the volume tube.

X1.3.1.20 If the volume tube is not full at the end of the flushing phase, fill the tube by opening valve E. Fill the volume tube to about the 5-inch level with de-aired water, so that it can be drained to the desired level for the coefficient determination. Close valves A and E.

X1.3.1.21 Uncouple all the vacuum lines from the manifold on the vacuum pump and shut off the vacuum pump.

X1.3.1.22 Uncouple the vacuum line from valves A and B. Coil the vacuum lines up and store them in a suitable location for future use.

X1.3.1.23 Do not drain the water from the chamber at this time.

X1.3.2 De-airing the differential pressure transducer.

X1.3.2.1 Fill the flushing tank on the differential pressure transducer about two-thirds full with de-aired water. Close the volume tube isolation valve R to isolate the volume tube and differential pressure transducer from the chamber.

X1.3.2.2 Open valve L on the differential pressure transducer. Remove the bottom plate on the differential pressure transducer by unscrewing the four cap head screws which hold the bottom plate to the body of the transducer. Fill the bottom plate with de-aired water. Open valve M and fill the bottom plate with de-aired water from the flushing tank. Open valves E and K to the volume tube and allow water to flood over the exposed capsule located under the main body of the differential transducer. With water flowing, place the bottom plate back on the differential pressure transducer, being careful not to entrap air. Close valve K but leave valve M to the flushing tank slightly open to relieve any pressure which results from tightening the cap screws. Tighten the four cap head screws.

X1.3.2.3 Flush the differential pressure transducer thoroughly by attaching a hand-held vacuum/pressure pump to the top of the flushing tank. Open valves K and M and flush water back and forth several times from the flushing tank to the volume tube through the differential transducer. When this step is complete be sure that the water level in the volume tube is near the full mark and close valve M. Open the volume tube isolation valve R.

NOTE X1.3–Extreme caution must be used when flushing the differential pressure transducer system since a pressure greater than about 10 lbf/in² (70 kPa) can damage the measuring capsule inside the transducer.

X1.4 Procedure

X1.4.1 All data are to be recorded on the "Temperature Correction Coefficient" form as shown on figure X1.1.

X1.4.2 Record all identifying information pertaining to the triaxial assembly on the form.

X1.4.3 Connect a hose to valve N; place the other end of the hose in an empty container or into a drain.

X1.4.4 Drain about one quarter to one-third of the water from the chamber by opening valve N. Close valves A and N.

X1.4.5 Remove the piston and the chamber cap from the chamber.

X1.4.6 Verify that volume tube valve B is open.

X1.4.7 Verify that all remaining valves to the chamber are closed.

X1.4.8 Attach a hose from the de-aired water source to the de-aired water source line. Open valve N and begin filling the chamber through the chamber bottom plate with de-aired water. As water rises in the chamber, use a squeeze bulb to flush any air bubbles that may be present on the bottom and sides of the chamber.

X1.4.9 Fill the chamber completely with de-aired water. Close valve N.

X1.4.10 Remove relief valve A by unscrewing it from the chamber cap.

X1.4.11 Set the chamber cap in place. Force the chamber cap down onto the chamber until it is properly seated.

X1.4.12 Open valve N and continue filling the chamber with de-aired water until water flows out of the hole left by removal of relief valve A. Close valve N.

X1.4.13 Insert a thermocouple or thermometer to about midheight in the chamber through the hole left by removal of valve A.

X1.4.14 Using modeling clay or silicon sealant, seal the opening between the thermocouple or thermometer and the hole in the cap.

X1.4.15 Open valve N and continue filling the chamber until water flows out the top of the ball bushing. Close valve N. Disconnect the de-aired water source line from valve N. Reattach the drain line to valve N.

X1.4.16 Screw the chamber bolts into the chamber bottom plate; set the chamber cap hold down plate into place.

X1.4.17 Secure the chamber cap to the chamber bottom plate by screwing the four nuts onto the four chamber bolts; tighten the nuts in a staggered sequence to about 50 ft-lbf torque.

X1.4.18 Tape a 0.5-inch diameter by 3-inch-long wooden dowel to the side of the piston nearest the piston retainer bar. Since there is not a specimen inside the chamber, the dowel keeps piston intrusion at about the same level it would be when a specimen is in the chamber.

X1.4.19 Lightly grease the piston. Open valve E. Carefully push the piston through the ball bushing in the chamber cap until the wooden dowel comes in contact with the top of the chamber cap. If the water displaced by the piston overtops the volume tube, drain the excess water by opening valve N. Close valve N.

X1.4.20 Open valves L and K to the differential pressure transducer.

X1.4.21 Attach and secure the piston retainer.

X1.4.22 Open volume tube drain valve E. Slowly open valve N to allow water to drain from the volume tube. When the level of water in the volume tube has reached the desired level for starting the test—usually the 10-inch level—close valve N.

X1.4.23 Place the triaxial assembly in an environment where an ambient temperature of 60 to 65 °F (16 to 18 °C) can be maintained for 8 to 12 hours.

X1.4.24 When the temperature of the triaxial assembly has stabilized, read and record chamber water temperature and volume tube height. Move the triaxial assembly to an environment where the ambient temperature will cause a water temperature rise of 10 to 15 °F over a period of 6 to 8 hours.

X1.4.25 Read and record water temperature to the nearest 0.1 °F and volume tube height to the nearest 0.01 inch. These readings should be taken at about 1-hour intervals until chamber water temperature stabilizes.

X1.4.26 This constitutes one trial. Repeat subparagraphs X1.4.23 through X1.4.25 if additional trials are required.

X1.4.27 Compute the temperature correction coefficient for each trial. Determine the average system temperature correction coefficient if required.

X1.5 Calculations

X1.5.1 Perform all calculations on the "Temperature Correction Coefficient" form as shown on figure X1.1.

7-2368 (10-86) Bureau of Reclamation	TEMPERATURE CORRECTION COEFFICIENT-DATA SHEET	Designation USBR ____-__
PROJECT: Example	FEATURE: Example	
TESTED BY / DATE	COMPUTED BY / DATE	CHECKED BY / DATE

Triaxial Assembly No. 29 (a) Volume tube factor, VT_f 0.110 ☒ in^3/in ☐ cm^3/cm

* Subscript 1 denotes initial reading
Subscript i denotes any subsequent reading

	DATE	TIME	Volume tube reading	Volume tube change $(3_i)-(3_1)$*	Converted Volume tube change (4)x(a)	Temperature	Temperature change
			in ☒ cm ☐	in ☒ cm ☐	in^3 ☒ cm^3 ☐	F° ☒ C° ☐	F° ☒ C° ☐
	(1)	(2)	(3)	(4)	(5)	(6)	(7)
1	9/16	6:34	10.00	—	0.00	66.2	0.0
2		7:30	9.84	0.16	0.018	67.8	1.6
3		8:50	9.51	0.49	0.054	70.7	4.5
4		9:30	9.45	0.55	0.061	71.6	5.4
5		10:30	9.23	0.77	0.085	73.2	7.0
6		11:38	9.09	0.91	0.100	75.0	8.8
7		12:35	9.05	0.95	0.105	75.7	9.5
8		13:30	8.91	1.09	0.120	76.6	10.4
9							
10							
11							
12							
13							
14							
15							
16							
17							
18							
19							
20							

REMARKS: System designed for 2x5 inch specimens. No endplates or specimen in chamber during this test. One trial only.

GPO 852 - 186

Figure X1.1. - Temperature correction coefficient—data sheet—example.

X1.5.2 *Volume Tube Factor, VT_f.*-Enter the volume tube factor in the space provided on figure X1.1.

X1.5.3 *Data Record.*-As readings are observed, record the following data: date (col. 1), time (col. 2), volume tube reading (col. 3), and temperature (col. 6).

X1.5.4 *Volume Tube Change* (col. 4).- The change in fluid level (col. 4) in the volume tube is calculated.

$$\Delta VT = VT_1 - VT_i \qquad \text{(X1-1)}$$

where:
ΔVT = volume tube change, in
VT_1 = initial volume tube reading, in
VT_i = subsequent volume tube reading, in

X1.5.5 The volume tube readings are converted (col. 5) from linear to volumetric readings.

$$\Delta VT_n = \Delta VT\ (VT_f) \qquad \text{(X1-2)}$$

where:
ΔVT_n = converted volume tube change, in^3
ΔVT = volume tube change, in
VT_f = volume tube factor, in^3/in

X1.5.6 The change in chamber water temperature (col. 7)is computed.

$$\Delta T = T_1 - T_i \qquad \text{(X1-3)}$$

where:
ΔT = temperature change, °F
T_1 = initial stabilized water temperature reading, °F
T_i = subsequent temperature water reading, °F

X1.5.7 The temperature correction coefficient is a constant which relates chamber water temperature change to system volume change and may be expressed as:

$$T_f = \frac{\Delta VT_n}{\Delta T} \qquad \text{(X1-4)}$$

where T_f equals temperature correction coefficient, $in^3/°F$. The temperature correction coefficient is the slope of the straight line relating ΔVT_n to ΔT and is assumed to pass through the origin. The line may be established from a visual best-fit straight line through the data points as shown on figure X1.2 or it may be determined using linear regression analyses. If three trials are performed, an average coefficient for the triaxial shear test system should be determined using all data collected for the individual trials.

NOTE X1.4.-The temperature correction coefficient is usually expressed in terms of cubic inch per degree Fahrenheit. However, it may be expressed in terms of cubic inch per degree Celcius, cubic centimeter per degree Fahrenheit, or cubic centimeter per degree Celcius.

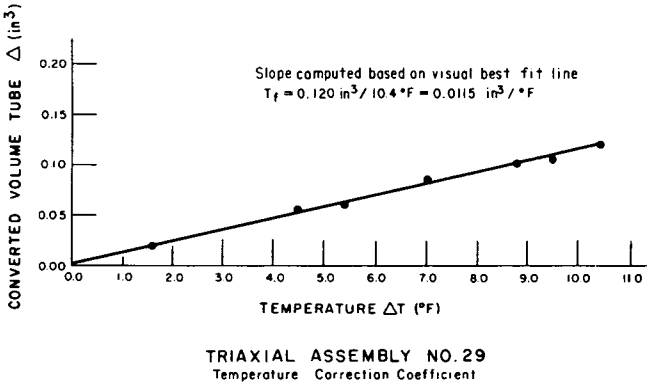

Figure X1.2. - Temperature correction coefficient plot—example.

X2. MEMBRANE CORRECTION

X2.1 Correction for Effect of Specimen Membrane

X2.1.1 The following equation, from ASTM D 1850, may be used to correct compressive soil strength for the effect of the specimen membrane if the error in deviator stress due to strength of the membrane exceeds 5 percent.

$$\Delta(\sigma_1 - \sigma_3) = \frac{4M\epsilon\ (1 - \epsilon)}{D_o} \qquad \text{(X2-1)}$$

where:
$\Delta(\sigma_1 - \sigma_3)$ = the correction to be subtracted from the measured compressive strength, lbf/in^2
D_o = initial diameter of specimen, in
M = compression modulus of the membrane, lbf/in
ϵ = specimen axial strain, expressed as a decimal

X2.2 Compression Modulus of the Membrane, *M*

X2.2.1 The compression modulus of the membrane may be determined by hanging a 0.5-inch length of membrane over a thin rod, placing another rod along the bottom of the hanging membrane and measuring the force per unit strain by stretching the membrane. In tests of very soft soils, the membrane effect may be significant; however, for most soils the membrane correction is insignificant and can be ignored.

X3. PORE PRESSURE CONSIDERATIONS

X3.1 Introduction

X3.1.1 Effective stress analysis involves evaluation of pore pressure in triaxial shear testing. In partially saturated soils this analysis may be based on pore air pressure and the theoretical relationship with volume change according to Boyle's Law for compression of air, combined with Henry's Law for air solubility in water. More recently, consideration has been given to capillary (suction) pressures in partially saturated soils. Research on measurement of these pore pressure effects was performed by the Bureau of Reclamation and a workable procedure was developed by Gibbs and Coffey [1]. Measurement of capillary stress in this testing procedure and in USBR 5735 includes all of the forces that affect soil suction. Capillary stress causes pore water pressure to be different than pore air pressure. Therefore, if effective stress is analyzed on the basis of deducting pore air pressure from applied stress, strength is evaluated at the void ratio and degree of saturation of the soil test specimen which represents a significant condition of the structure being investigated, such as the compacted condition of an embankment or the in-place condition of a foundation. The strength so evaluated should include effects of capillary pressure. However, if stress is analyzed on the basis of pore water pressure being deducted from applied stress, the result would be a basic interpretation of strength that would not include capillary pressure as effective stress. It is believed there is a distinct relationship between pore pressure and volume change which the observed data of a compression test should follow if pore pressure is initially equalized throughout the test specimen. During tests on undrained (sealed) specimens, it is believed that pore pressure regains equalization quite rapidly because there is not a major flow of fluid within the test specimen. Thus, for practical testing procedures, this means that sealed tests may be performed in a short time—such as a normal workday—and end plates may be used for measuring pore pressure during testing.

X3.2 Pore Pressure Analysis

X3.2.1 In a sealed unsaturated specimen, the voids contain water and air. The air can develop pressure, u_a, as it compresses and likewise the water will develop pressure, u_w, as load is applied. However, the water pressure is always lower (see fig. X4.1 and equation X3-1) and may even be negative as a result of capillary suction on the water films in the small soil pores. The fluid pressures must be in equilibrium or there will be fluid migration until they are in equilibrium; that is:

$$u_c = -(u_a - u_w) \qquad \text{(X3-1)}$$

where:

u_c = capillary stress, the portion of fluid pressure that assimilates capillary stress and is always negative; however, it approaches zero as compression increases enough to cause saturation, lbf/in²

u_a = pore air pressure, lbf/in²

u_w = pore water pressure, lbf/in²

X3.2.2 Theoretical evaluation of pore air pressure, u_a, as shown by Hamilton [2], considers the air volume to be the volume of free air plus dissolved air according to Henry's Law. Then, using the principle of Boyle's Law at constant temperature:

$$P_a\,(V_{ao} + hV_w) = (P_a + u_a)\,(V_{ac} + hV_w) \qquad \text{(X3-2)}$$

and solving for u_a

$$u_a = P_a \frac{(V_{ao} + hV_w)}{(V_{ac} + hV_w)} - 1 \qquad \text{(X3-3)}$$

where:

P_a = atmospheric pressure, lbf/in²

h = 0.02, coefficient of air solubility in water by volume according to Henry's Law

V_{ao} = initial volume of free air in percent of initial volume, %

V_{ac} = final volume of free air in percent of initial volume, %

V_w = volume of water in percent of initial volume, %

X3.3 Pore Air Pressure

X3.3.1 A more convenient form of this equation suggested by Hilf [3] uses percent volume change, ΔV. It is equal to $(V_{ao} - V_{ac})$, thus

$$u_a = \frac{P_a\,\Delta V}{V_{ao} + hV_w - \Delta V} \qquad \text{(X3-4)}$$

An example calculation of theoretical pore air pressure, u_a, is given on figure X4.1.

X3.4 Pore Pressure Curves

X3.4.1 To fully establish the theoretical pore pressure curves—as shown on figure X4.2—the following steps are taken.

X3.4.2 The initial capillary stress (negative pore pressure), u_c, is determined for the test specimen by performing USBR 5375 which does not damage or disturb the specimen for later shear testing.

X3.4.3 The shape of the u_c curve can be estimated as shown on figure X4.2. It can be either asymptotic to zero (as shown) or can be a straight line.

X3.4.4 The theoretical pore air pressure line, u_a, is computed using equation X3-4 as shown on the "Pore Air Pressure Computation" sheet (see fig. X4.1).

X3.4.5 The theoretical pore water pressure line, u_w, is computed using equation X3-1: $u_w = u_a + u_c$.

X3.4.6 These theoretical curves are used to analyze observed data and to control the rate of testing in triaxial shear.

X3.5 References

[1] Gibbs, H. J., and Coffey, C. T., "Techniques for Pore Pressure Measurements and Shear Testing of Soil," *Proceedings*: Seventh International Conference on Soil Mechanics and Foundation Engineering, Mexico, vol. 1, 1969, p. 151. (Also published as "Application of Pore Pressure Measurments to Shear Strength of Cohesive Soils," Bureau of Reclamation Report No. E.M.-761, Denver, Colorado, June 1969).

[2] Hamilton, L. W., "The Effect of Internal Hydrostatic Pressure on the Shearing Strength of Soils," *Proceedings*: ASTM, vol 39, pp. 1-100, 1939.

[3] Hilf, J. W., "An Investigation of Pore Water Pressure in Compacted Cohesive Soils" (Doctoral Thesis University of Colorado), Technical Memorandum No. 654, Bureau of Reclamation, Denver, Colorado, October 1956.

X4. DETERMINING AND PLOTTING PORE AIR, PORE WATER, AND CAPILLARY PRESSURES

X4.1 Scope

X4.1.1 When performing the UU (unconsolidated-undrained) triaxial shear test and the K_o test, on partially saturated soils in the UU-mode, the pore air, u_a, and pore water, u_w, pressures must be measured if effective stresses are to be computed. This appendix discusses necessary calculations and data plots.

X4.2 Procedure

X4.2.1 Determine the capillary pressure, u_c, of the specimen using the method outlined in USBR 5735. From the dry unit weight, moisture content, and apparent specific gravity of soil, theoretical values of pore water pressure, u_w, and pore air pressure, u_a, may be computed using the following equations.

$$V_s = \frac{\gamma_d}{G\gamma_w} \qquad \text{(X4-1)}$$

where:

V_s = volume of solids, expressed as a decimal
γ_d = dry unit weight of the specimen, lbf/ft³
G = apparent specific gravity of the soil
γ_w = absolute unit weight of water (at 4 °C) (62.43 lbf/ft³)

$$V_w = \frac{\gamma_d \left(\frac{w}{100}\right)}{\gamma_w} \qquad \text{(X4-2)}$$

where:

V_w = volume of water, expressed as a decimal
w = moisture content of specimen, %
γ_d = dry unit weight of specimen, lbf/ft³
γ_w = unit weight of water at 70 °F, (21.1 °C), assume normal room temperature, 62.29 lbf/ft³
100 = convert from percent to decimal

$$V_a = 1.00 - V_s - V_w \qquad \text{(X4-3)}$$

where:

V_a = volume of air, expressed as a decimal
V_s = volume of solids, expressed as a decimal
V_w = volume of water, expressed as a decimal
1.00 = unity

$$V_{as} = hV_w = 0.02\ V_w \qquad \text{(X4-4)}$$

where:

V_{as} = total volume of air in solution, expressed as a decimal
h = 0.02 coefficient of air solubility in water by volume according to Henry's law
V_w = volume of water, expressed as a decimal

$$u_s = \frac{P_a\ V_a}{V_{as}} \qquad \text{(X4-5)}$$

where:

u_s = pore pressure at the point where complete saturation of the specimen occurs, lbf/in²
P_a = average annual atmospheric pressure corrected for altitude (12.0 lbf/in² in Denver, Colorado)
V_a = volume of air, expressed as a decimal
V_{as} = volume of air in solution according to Henry's law, expressed as a decimal

$$u_a = \frac{P_a \left(\frac{\Delta V}{100}\right)}{V_a + V_{as} - \left(\frac{\Delta V}{100}\right)} \qquad \text{(X4-6)}$$

where:

u_a = pore air pressure, lbf/in²
P_a = average annual atmospheric pressure, corrected for altitude (12.0 lbf/in² in Denver, Colorado)
V_a = volume of free air, expressed as a decimal
ΔV = volume change of specimen, %
V_{as} = total volume of air in solution, expressed as a decimal
100 = convert from percent to decimal

X4.2.2 Compute u_a of the specimen using the form as shown on figure X4.1.

X4.2.3 Prepare a plot as shown on figure X4.2.

X4.2.4 Plot computed pore air pressure, u_a, (col 4) versus volume change (in percent), ΔV, (col. 1) and connect the data points.

X4.2.5 Obtain the computed value of V_a (volume of air) computed on figure X4.1. Multiply the value of V_a by 100 to convert to percent volume of air and plot this value on the graph and draw a vertical line from zero pore pressure to the top of the graph. This is labeled the "Saturation Line."

NOTE X4.1.–When performing this test, measured volume change of the specimen should not plot beyond the "Saturation Line" since the solids and water in the specimen are not normally compressible at the pressures used for testing in the laboratory.

X4.2.6 Plot the maximum value of u_c (–17.0 lbf/in² on fig. X4.2). Plot another point at the intersection of the saturation line and the zero pore pressure axis. Connect the two points by drawing a curved line between them. Experience has shown this method to be sufficiently accurate for most soils. However, specialized testing can be performed with a "floating ring" device in which data points are obtained for the u_c curve.

X4.2.7 Select u_c values from the graph for corresponding volume change values and enter them on the figure X4.1 form (col. 5).

X4.2.8 Compute values of u_w (col. 6) for the corresponding volume changes.

$$u_w = u_c + u_a \qquad \text{(X4-7)}$$

where:

u_w = pore water pressure, lbf/in²
u_c = capillary pressure, lbf/in²
u_a = pore air pressure, lbf/in²

7-2369 (10-86) Bureau of Reclamation	PORE AIR PRESSURE COMPUTATION SHEET		Designation USBR ____-__
SAMPLE NO. TP-100	SPECIMEN NO. 1	PROJECT Example	FEATURE Example
TESTED BY DATE	COMPUTED BY DATE	CHECKED BY DATE	

The following are definitions for the symbols used below:

V_s = Volume of soil expressed as a decimal

V_w = Volume of water expressed as a decimal

V_a = Volume of air expressed as a decimal

U_s = Pore air pressure at saturation (U_a)

h = The coefficient of air solubility in water by volume according to Henry's Law

$V_{as} = hV_w$ = Volume of Air in solution

γ_d = Dry unit weight of the specimen in lbf/ft^3

γ_w = Unit weight of water at 4°C (62.43 lbf/ft^3)

γ_{wt} = Unit weight of water at 22.0°C (62.29 lbf/ft^3)

G = Specific gravity of the soil.

P_a = 12.0 lbf/ft^3 = Averge barometic pressure corrected for altitude at Denver, Co.

U_c at 0% ΔV = _____ lbf/in^2

$V_s = \frac{\gamma_d}{G\gamma_w} = \frac{(116.2)}{(2.70)(62.43)} = 0.689$ $\quad V_w = \frac{(w/100)\gamma_d}{\gamma_{wt}} = \frac{(0.1150)(116.2)}{62.29} = 0.215$

$V_a = 1.0 - V_s - V_w = 0.096$ $\quad V_{as} = hV_w = (0.02)(0.215) = 0.004$

$V_a + V_{as} = 0.100$ $\quad U_s = \frac{P_a V_a}{V_{as}} = \frac{12.0\,(0.096)}{(0.004)} = 288$

(1) Volume change (ΔV) percent	(2) 12.0 $\left(\frac{\Delta V}{100}\right)$	(3) $V_a + V_{as} - (\Delta V/100)$	(4) Pore Air Pressure (U_a) lbf/in^2 (2) ÷ (3)	(5) Capillary Pressure (U_c) lbf/in^2 (graph)	(6) Pore Water Pressure (U_w) lbf/in^2 (5) + (4)
0.0	0.00	0.100	0.0	-17.0	-17.0
0.5	0.060	0.095	0.63	-15.0	-14.4
1.0	0.120	0.090	1.33	-13.0	-11.7
2.0	0.240	0.080	3.00	-10.0	-7.0
3.0	0.360	0.070	5.14	-7.5	-2.4
4.0	0.480	0.060	8.00	-5.0	3.0
5.0	0.600	0.050	12.0	-3.5	8.5
6.0	0.720	0.040	18.0	-2.0	16.0
7.0	0.840	0.030	28.0	-1.0	27.0
8.0	0.960	0.020	48.0	-0.5	47.5
9.0	1.080	0.010	108.0	-0.25	107.8
9.6	1.152	0.004	288.0	0.0	288.0
10.0	1.200				
11.0	1.320				
12.0	1.440				
13.0	1.560				
14.0	1.680				

GPO 852 - 187

Figure X4.1. - Pore air pressure computation sheet—example.

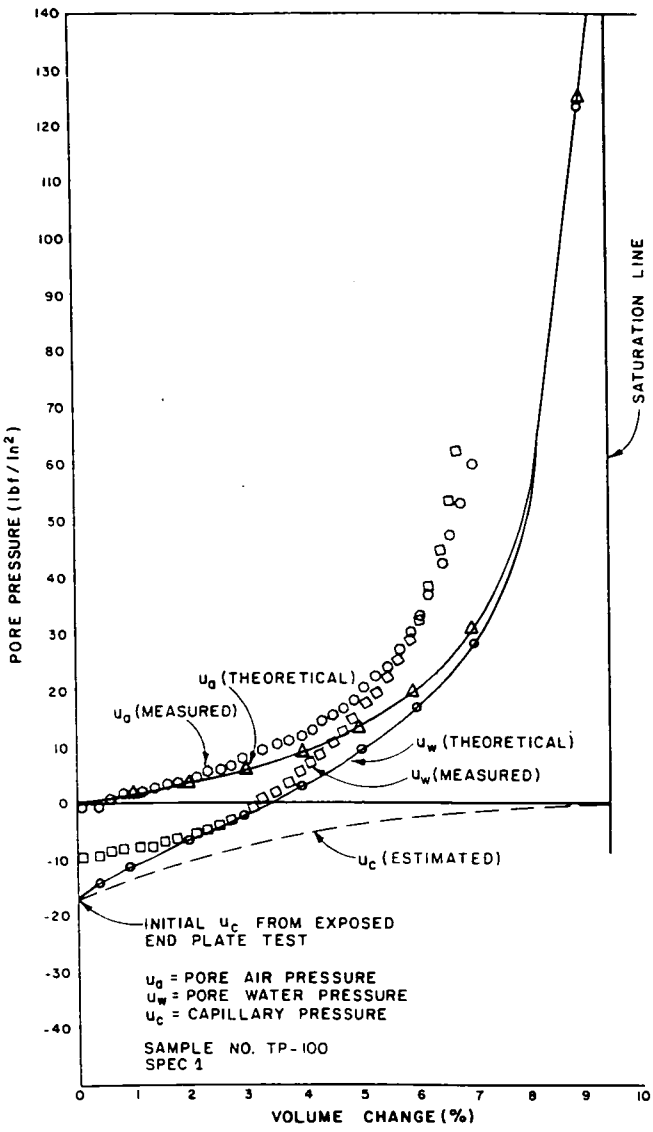

Figure X4.2. - Pore air and pore water pressures versus percent volume change—example.

X4.2.9 On figure X4.2, plot the values of u_w versus volume change (in percent) on the graph and connect the data points with a smooth curve.

X4.3 Performing The Test and Plotting Data

X4.3.1 Place the specimen in the triaxial assembly using the correct type of porous inserts in the top and bottom end plates (fine ceramic on top, coarse on bottom).

X4.3.2 If the porous insert in the bottom end plate has a bubbling pressure of 5 lbf/in² or less, obtain a precut No. 200 screen. Spray the screen with a silicon mold release.

X4.3.3 Place the No. 200 screen on top of the bottom end plate. The purpose of the No. 200 screen is to ensure a "break line" between the soil and the end plate, so that pore air pressure is measured.

X4.3.4 Use the injector to control capillary pressure u_w in the top end plate. Allow u_w to "draw down" to no more than about 8.0 lbf/in² negative (assuming the value of u_c exceeds 8 lbf/in²).

X4.3.5 Apply the lateral pressure slowly. Constantly monitor the values of u_a and u_w.

X4.3.6 Both u_a and u_w should closely follow the theoretical curves as on figure X4.2. If u_c is greater than about minus 8 lbf/in² it must be controlled with the injector until the specimen has undergone sufficient volume change so the negative pressure is less than about minus 8.0 lbf/in².

X4.3.7 Compute percent volume change of the specimen at 5.0 lbf/in² lateral pressure increments.

X4.3.8 Volume strain of the specimen may be computed.

$$\epsilon_v = 100 \frac{(\Delta VT_n + \Delta VC - \Delta VP + \Delta TV)}{V_o} \quad \text{(X4-8)}$$

where:

ϵ_v = volume strain, %
V_o = initial specimen volume, in³
$\Delta VT_n = (\Delta VT)\,(VT_f)$ = converted volume tube change, in³
100 = convert from decimal to percent

and

ΔVT = volume tube change, in
VT_f = voume tube factor, in/³in
$\Delta VC = [(\sigma_3 - LTPR_i)\,(SL_i)] + Y_i$ = chamber volume change, in³

and

σ_3 = applied lateral pressure, lbf/in²
$LTPR_i$ = lateral pressure intercept for lateral pressure increment considered, lbf/in²
SL_i = slope of line relating volume change to applied lateral pressure for pressure increment considered, in³/(lbf/in²)
Y_i = volume change intercept for lateral pressure increment considered, in³
$\Delta VP = \Delta L\,(AP)$ = volume change due to piston movement, in³

and

ΔL = change in piston length, in
AP = load piston area, in²
$\Delta TV = T_f(T_1 - T_i)$ = volume change due to temperature change, in³

and

T_f = temperature correction coefficient, in³/°F
T_1 = initial temperature reading, °F
T_i = subsequent temperature reading, °F

NOTE X4.2.-*Carefully* observe equation signs. This equation is valid only if axial deformation indicator readings decrease as specimen height decreases.

X4.3.9 Percent volume change for the K_o test may be computed either by the equation shown in subparagraph X4.3.8 (this appendix) or by the following equation:

$$\Delta V = 100 \left[\frac{(L_1 - L_i)\,A_i}{V_o} \right] \quad \text{(X4-9)}$$

where:

L_1 = LVDT or dial initial reading, in
L_i = LVDT or dial subsequent reading, in
A_i = specimen area at subsequent reading, in^2
V_o = specimen volume initial reading, in^3
100 = convert from decimal to percent

This equation will give correct values in the K_o test since diameter of the specimen is not allowed to change.

X4.3.10 Plot the values of u_a and u_w on the graph (fig. X4-2) as lateral pressure and axial load are applied. Continue to plot the measured values of u_a and u_w and compare them with theoretical values as the test progresses.

UNITED STATES DEPARTMENT OF THE INTERIOR
BUREAU OF RECLAMATION

USBR 5750-89

PROCEDURE FOR

PERFORMING CONSOLIDATED-UNDRAINED TRIAXIAL SHEAR TESTING OF SOILS

INTRODUCTION

This procedure is under the jurisdiction of the Geotechnical Services Branch, Code D-3760, Research and Laboratory Services Division, Denver Office, Denver, Colorado. The procedure is issued under the fixed designation USBR 5750. The number immediately following the designation indicates the year of acceptance or the year of last revision.

1. Scope

1.1 This designation outlines the procedure for determining the shear strength of consolidated-undrained cylindrical soil specimens in either the undisturbed or compacted state using the triaxial shear test method. Specimens may be saturated using a back-pressuring technique prior to application of compressive stresses.

1.2 The CU (consolidated-undrained) test is performed using either strain or stress controlled axial loading. The rate of strain or rate of stress application is dependent on the type of soil being tested.

1.3 Lateral pressure (confining pressure or cell pressure) is applied manually at a rate compatible with the type of soil being tested.

1.4 Pore pressure measurements are made during the CU test so that effective stresses can be evaluated.

1.5 CU tests have been performed successfully on many types of soil, ranging from fine-grained to coarse-grained soil containing up to 3-inches (76-mm) maximum particle size. Specimen sizes for various types of soil have ranged from 1-3/8 inches diameter by 3 inches high to 9 inches diameter by 22-1/2 inches high (35- by 75- to 230- by 570-mm).

1.6 The CU test provides data for determining shear strength properties and stress–strain relations for soils.

1.7 Multiple specimens may be tested under single stage compressive loading or a single specimen may be tested under multistage compressive loading.

2. Auxiliary Tests

2.1 A compacted or undisturbed soil specimen must be prepared in accordance with USBR 5210 or 5215 prior to performing this procedure. A moisture content and unit weight determination must be obtained in accordance with USBR 5300 and 5370, respectively, to obtain placement conditions for the test specimen. Physical properties tests are to be performed in accordance with USBR 5320, 5330, 5350, 5360, and 5365 after completion of the test.

3. Applicable Documents

3.1 *USBR Procedures*:

USBR 1008 Calibrating Linear Variable Differential Transformers
USBR 1012 Calibrating Balances or Scales
USBR 1040 Calibrating Pressure Gauges
USBR 1045 Calibrating Force Transducers (Load Cells)
USBR 1050 Calibrating Pressure Transducers
USBR 1055 Calibrating Differential Pressure Transducers
USBR 1450 Calibrating Triaxial-Type Chambers for Pressure-Volume Change Relations
USBR 1455 Calibrating Volume and Drain Tubes
USBR 3900 Standard Definitions of Terms and Symbols Relating to Soil Mechanics
USBR 5210 Preparing Compacted Soil Specimens for Laboratory Use
USBR 5215 Preparing Soil Specimens for Laboratory Use From Undisturbed Samples
USBR 5300 Determining Moisture Content of Soil and Rock by the Oven Method
USBR 5320 Determining Specific Gravity of Soils
USBR 5330 Performing Gradation Analysis of Fines and Sand Size Fraction of Soils, Including Hydrometer Analysis
USBR 5350 Determining the Liquid Limit of Soils by the One-Point Method
USBR 5360 Determining the Plastic Limit and Plasticity Index of Soils
USBR 5365 Determining Shrinkage Limit and Shrinkage Ratio of Soils
USBR 5370 Determining Unit Weight of Cylindrical Soil Specimens
USBR 7000 Performing Disturbed Soil Sampling in Test Pits, Trenches, Accessible Borings, and Tunnels
USBR 7010 Performing Disturbed Soil Sampling Using Auger Boring Method
USBR 7100 Obtaining Undisturbed Block Samples by the Hand and Chain Saw Methods
USBR 7105 Performing Undisturbed Soil Sampling by Mechanical Drilling Methods

4. Summary of Method

4.1 A soil specimen is prepared and placed in a standard triaxial assembly as shown on figure 1 and the chamber is sealed. The specimen may be saturated using a back-pressure technique and is then isotropically consolidated under a predetermined effective consolidation pressure until primary consolidation is complete. The drains are closed and axial compressive stress is applied using either a strain or stress controlled loading device. As axial load is applied, deviator load, axial specimen deformation, specimen volume, pore pressure, and chamber water temperature are measured and recorded. The moisture content of the test specimen is not permitted to change during axial load application. Shear stress, major and minor principal stresses at failure, and axial strain at failure are obtained. Stress-strain curves are plotted and effective stress or total stress shear strength envelopes can be prepared. For single stage compressive loading of multiple specimens, at least three specimens are required for one complete CU triaxial shear test. For multistage compressive loading, only one specimen is required for one complete CU triaxial shear test.

5. Significance and Use

5.1 Shear strength of soil in triaxial compression depends on stresses applied, consolidation conditions, strain rate or stress application rate, and the stress history experienced by the soil.

5.2 Shear strength measured (in this test) is determined under undrained conditions. The test is applicable to field conditions where consolidated soils are subjected to stress changes under undrained conditions and at magnitudes similar to those applied during the test.

5.3 Shear strength can be expressed in terms of effective stress using pore pressures measured during the test. The results may be applied to field conditions where excess pore pressures can be estimated during stress changes.

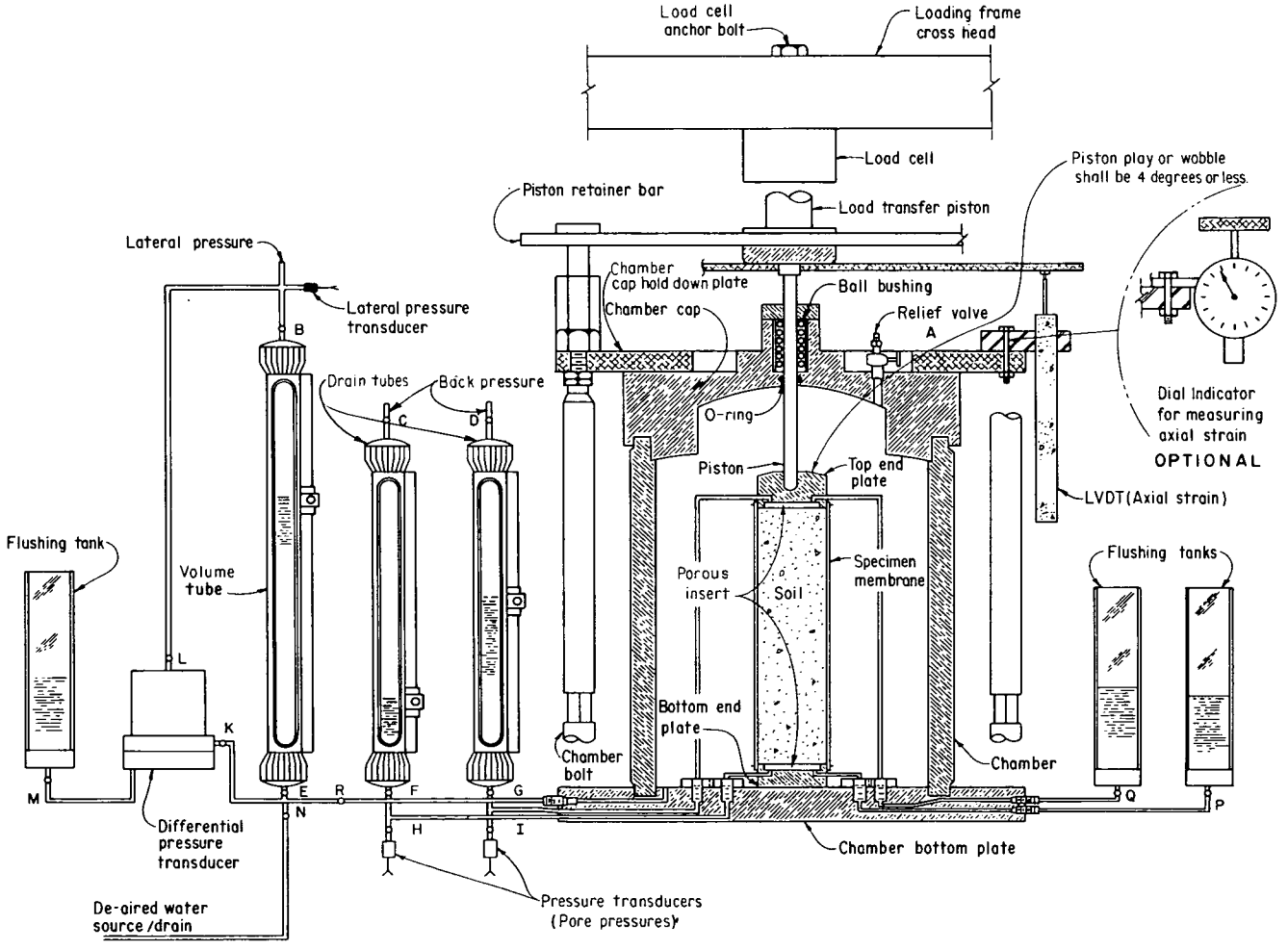

Figure 1. – Triaxial assembly for consolidated-undrained tests.

5.4 Shear strength—as determined by the test—can be expressed in terms of total stress (undrained conditions) or in terms of effective stress (known pore pressure conditions), and is commonly used in stability analyses, earth pressure calculations, and foundation designs.

6. Terminology

6.1 Definitions are in accordance with USBR 3900. Terms of particular significance are:

6.1.1 *Consolidation.*–The time-dependent reduction in volume of a soil mass resulting from an increase in effective stress.

6.1.2 *Deviator Stress* ($\sigma_1-\sigma_3$).–The difference between the major and minor principal stresses in a triaxial test (ASTM definition).

6.1.3 *Effective Stress* (σ').–The average normal force per unit area transmitted from grain to grain of a soil mass (similar to ASTM).

6.1.4 *Mohr Circle.*–A graphical representation of the stresses acting on the various planes at a given point (ASTM).

6.1.5 *Neutral Stress/Pore Pressure/Pore Water Pressure* (u).–Stress transmitted through the pore water (water filling the voids of the soil)(ASTM).

6.1.6 *Strength.*–The maximum stress which a material can resist without failure for any given type of loading (International Society of Rock Mechanics).

6.1.7 *Triaxial Shear Test.*–A test in which a specimen of soil or rock encased by an impervious membrane is subjected to a confining pressure and then loaded axially to failure (ASTM).

6.2 Terms not included in USBR 3900 specific to this designation are:

6.2.1 *Back-Pressure.*–A pressure applied to the specimen pore water that causes gas in the pore space to go into solution in the pore water; i.e., to saturate the specimen.

6.2.2 *Bubbling Pressure.*–Pressure required to force air through a saturated porous insert (also referred to as the air-entry value).

6.2.3 *Effective Consolidation Pressure.*–The effective lateral pressure (the difference between cell pressure and back-pressure) applied to the specimen during consolidation.

6.2.4 *Failure.*–The stress condition at failure for a test specimen is taken to correspond to the maximum deviator stress attained, or the deviator stress (principal stress difference) at 20-percent axial strain, whichever is obtained first during performance of a test.

7. Apparatus

7.1 *General Apparatus*:

7.1.1 *Balance or Scale.*–Balance or scale meeting the requirements shown in table 1.

Table 1. – Balance or scale requirements.

Test specimen size				Balance or scale	
Diameter in	Height in	Diameter mm	Height mm	Capacity	Readability
2.0	5.0	50.8	127.0	1000 g	0.05 g
2.8	7.0	71.1	177.8	2000 g	0.1 g
6.0	15.0	152.4	381.0	25 kg	0.01 kg
9.0	22.5	228.6	571.5	75 kg	0.01 kg

7.1.2 *Timer.*–A timing device indicating elapsed time to the nearest 1 second is to be used for establishing the rate of stress or strain application.

7.1.3 *Specimen Size Measurement Devices.*–Devices used to measure the height and diameter of the specimen. The devices must be capable of measuring to the nearest 0.001 inch (0.025 mm) and should be constructed such that their use will not disturb the specimen. A vernier caliper is recommended for measuring specimen height and a pi tape for measuring specimen diameter.

NOTE 1.–For specimens having a height that exceed 12 inches (305 mm), use a rule graduated in millimeters to measure the height of the specimen to the nearest 1.0 mm (1/32 in).

7.1.4 *Water Container.*–Sufficient size to accommodate the test specimen.

7.1.5 *Suspension Wire and Specimen Carriage.*–For determining the specimen mass in air and water.

7.2 *Equipment Unique to This Procedure*:

7.2.1 *Axial Loading Device* (compression test machine).–A loading device (fig. 2) having sufficient capacity and control to provide the desired magnitude and rate of loading, respectively.

7.2.2 *Chamber Pressure Maintaining and Measurement Devices.*–Devices must be capable of applying and controlling the chamber pressure to within ±0.5 lbf/in² (±3.5 kPa). The devices may consist of a reservoir connected to the chamber and partially filled with the chamber fluid (usually water), with the upper part of the reservoir connected to a pressurized gas supply. The gas pressure is controlled by a pressure regulator and measured by a pressure gauge, electronic pressure transducer, or any other device capable of measuring to the prescribed tolerance. However, a hydraulic system pressurized by deadweight acting on a piston or any other pressure maintaining and measurement device capable of applying and controlling the chamber pressure to the tolerance prescribed in this subparagraph may be used.

7.2.3 *Triaxial Assembly.*–A chamber (fig. 1) in which a cylindrical specimen, enclosed by a membrane sealed to end plates, is placed and subjected to axial load while confined by lateral (σ_3) pressure. The triaxial chamber consists of a chamber bottom plate, chamber, and chamber cap. The chamber cap includes a ball bushing and piston, aligned with the axis of the specimen, through which the load from the axial loading device can be transmitted to the specimen to cause the specimen to be compressed axially

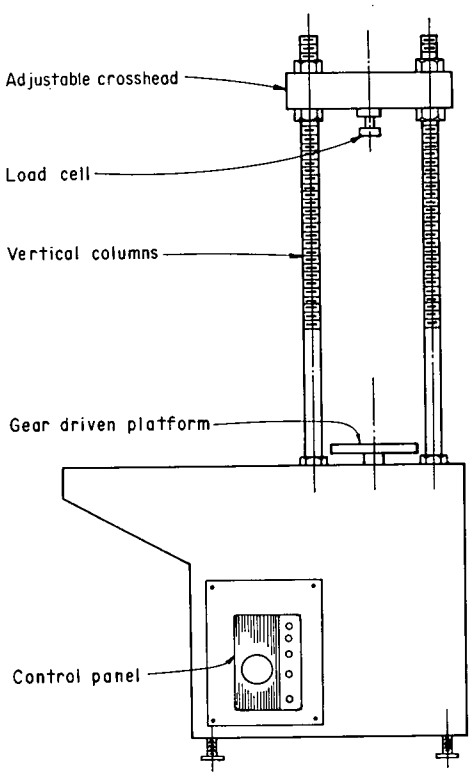

Figure 2. – Compression test machine.

between the end plates. The ball bushing and piston must be designed to minimize friction.

7.2.3.1 *Specimen End Plates.*–The end plates must be constructed of a noncorrosive impermeable material such as aluminum, stainless steel, or titanium; each must have a circular cross section and circular plane surface of contact with the specimen. The mass of the top end plate must be less than 0.5 percent of the applied axial load at failure. The diameter of the end plates should be within ±0.020 inch of the diameter of the specimen. The bottom end plate must be coupled to the chamber bottom plate to prevent lateral motion or tilting. The top end plate must be designed to receive the piston such that the piston-to-end plate contact area is concentric with the cap. It is recommended that the top end plate should be constructed in a manner so that piston play or "wobble" be restricted to 4 degrees or less perpendicular to the top end plate. Each end plate must be plumbed so air can be flushed from the end plate. The cylindrical surface of the end plates to which the membrane is sealed should be smooth and free of scratches. The end plates must be constructed so that pore pressure measurements can be obtained from both ends of the specimen. Each end plate shall be fitted with a porous insert.

7.2.3.2 *Porous End Plate Inserts.*–Porous inserts are manufactured from silicon carbide, aluminum oxide, sintered bronze, or ceramic. The material must not be susceptible to corrosion by soil substances or moisture. The proper grade (coarseness) of insert depends upon the type of test being performed and the soil being tested. The insert should be coarse enough to develop adequate interlock with the specimen, but fine enough to prevent excessive intrusion of soil into the pores of the insert. Exact criteria for this have not been established. The coarseness of insert material determines two properties vital to pore pressure measurements: (1) permeability, the rate of diffusion of a pressurized gas through a porous material; and (2) bubbling pressure, the air entry value; i.e., the pressure required to force air through a saturated porous insert.

7.2.3.3 *Axial Load-Measuring Device.*–The load measuring device shall be capable of measuring the axial load to an accuracy of ±0.25 percent over its full range.

7.2.3.4 *Pore Pressure Transducers.*–Pore pressure transducers are used to measure the pore pressure in the soil specimen. The pressure transducers shall have an accuracy of ±0.25 percent over their full range.

7.2.3.5 *Lateral Pressure Transducer.*–The lateral pressure transducer is used to measure the lateral pressure applied inside the chamber. The transducer shall have an accuracy of ±0.25 percent over its full range.

7.2.3.6 *Differential Pressure Transducer.*–The differential pressure transducer is used to measure volume change of the specimen during the test. The transducer and volume tube are plumbed so that the height of the water column in the volume tube reacts directly on the measuring diaphragm inside the transducer. The transducer shall have an accuracy of ±0.25 percent of its full range.

7.2.3.7 *Volume Tube.*–A constant bore glass tube supported by a sectional brass pipe with watertight seals on both ends. The volume tube is used primarily as a means of visually monitoring the volume change of the specimen. However, it serves also as a water reservoir and flushing tube when de-airing the system. For triaxial systems, in which visual readings of the volume tube are used in determining volume change of the specimen, the volume tube should be graduated in 0.01 inch divisions. For triaxial systems, in which a differential pressure transducer (as described in subpar. 7.2.3.6) is used in determining volume change of the specimen, it is recommended that the volume tube be graduated in 0.1 inch divisions so that a visual check of the specimen volume change can be made. The volume tube must be capable of withstanding pressures up to 250 lbf/in² (1724 kPa). The volume tube assembly must be enclosed in a 1/4-inch thick (6 mm) Plexiglas shield to prevent injury to personnel in the event the volume tube fails.

7.2.3.8 *Drain Tube.*–A constant bore glass tube supported by a sectional brass pipe with watertight seals on both ends. For CU (consolidated-undrained) tests, the drain tubes are used as a water reservoir and flushing tube when de-airing the system, for back pressuring the specimen, and may be used to monitor the volume of fluid drainage during the test. The drain tube must be capable of withstanding pressures up to 250 lbf/in² (1724 kPa). The drain tube assembly must be enclosed in a 1/4-inch thick (6 mm) Plexiglas shield to prevent injury to personnel in the event the drain tube fails.

7.2.3.9 *Flushing Tank.*–Plexiglas tubes used for flushing air from the triaxial assembly. One tank is mounted on the differential pressure transducer and one each on the exit ports of the top and bottom end plates.

7.2.3.10 *Axial Deformation Indicator.*–A dial indicator or LVDT (linear variable differential transformer) having 0.001 inch (0.025 mm) resolution, and travel range of at least 20 percent of the initial height of the test specimen. Other measuring devices meeting these requirements for precision and range may be used.

7.2.3.11 *Specimen Membrane.*–A membrane used to encase the specimen to isolate it from chamber fluid. Membranes should be carefully inspected prior to use; if any flaws or pinholes are evident, the membrane should be replaced. To minimize restraint to the specimen, the unstretched membrane diameter should be between 75 and 90 percent of the specimen diameter. The membrane thickness must not exceed 1 percent of the diameter of the specimen. The membrane must be sealed to the end plates with two rubber O-rings for which the unstressed inside diameter is 75 percent or less of the diameter of the end plate. Other methods that produce a positive seal may be used.

7.3 *Miscellaneous Apparatus*:

7.3.1 *Tools, Etc.*–Specimen trimming and carving tools, membrane expander, O-ring expander, moisture content cans, and data forms as required.

7.3.2 *Humidity Room.*–A soil storage and sample preparation room with controlled temperature and humidity. The humidity room at the Geotechnical Services Laboratory, Denver Office, is designed to maintain 70±5 percent relative humidity and a temperature of 70±5 °F (21±3 °C).

8. Reagents and Materials

8.1 Water used for performing the test is to be de-aired water at room temperature. The purity should be such that the water is free of acids, alkalies, or oils, and is suitable for drinking.

9. Precautions

9.1 *Safety Precautions*:

9.1.1 Safety shoes should be worn when de-airing the equipment or placing the specimen.

9.1.2 Water spillage in the area should be cleaned up as soon as possible.

9.1.3 Safety glasses should be worn when applying air pressure to the volume/drain tubes when saturating or consolidating the specimen.

9.1.4 Pressure should be slowly applied and released from the triaxial assembly to prevent the glass volume tubes from shattering.

9.2 *Technical Precautions*:

9.2.1 Care must be taken to completely de-air the triaxial assembly prior to performing the test.

9.2.2 The porous inserts in the end plates should be cleaned frequently to remove any impurities which may inhibit free waterflow.

10. Sampling, Test Specimen, and Test Units

10.1 *Sample Size*:

10.1.1 *Compacted Specimens.*

10.1.1.1 Samples to be used in triaxial shear testing of compacted specimens should be obtained in accordance with methods presented in USBR 7000 or 7010.

10.1.1.2 A sufficient mass of material should be obtained so that all required testing can be performed on the sample. Suggested minimum sample mass (based on minimum specimen size, maximum particle size, and a minimum of four specimens per test) should be in accordance with table 2.

Table 2. – Suggested minimum sample mass.

Test specimen size				Practical field sample mass	
Diameter in	Height in	Diameter mm	Height mm	lbm	kg
2.0	5.0	50.8	127.0	65	30
2.8	7.0	71.1	177.8	100	45
6.0	15.0	152.4	381.0	200	90
9.0	22.5	228.6	571.5	700	320

10.1.2 Undisturbed specimens.–Samples to be used in triaxial shear testing of undisturbed specimens should be obtained in accordance with methods presented in USBR 7100 or 7105.

10.2 *Specimen Size*:

10.2.1 Test specimen size and maximum particle size should be in accordance with table 3.

Table 3. – Specimen and maximum particle size.

Test specimen size				Maximum particle size	
Diameter in	Height in	Diameter mm	Height mm	in	mm
2.0	5.0	50.8	127.0	No. 4	4.75
2.8	7.0	71.1	177.8	0.375	9.5
6.0	15.0	152.4	381.0	0.75	19.0
9.0	22.5	228.6	571.5	1.5	37.5

10.2.2 If, after completion of a test, it is found that oversize particles were present indicate this information in the report of test data under *Remarks*.

NOTE 2.–For specimen sizes and maximum particle sizes not listed in table 3, maximum particle size should be equal to or less than one-sixth the specimen diameter.

10.2.3 Specimen height-to-diameter ratio must be between 2 and 3.

10.3 *Compacted Specimens.*–Prepare compacted test specimens in accordance with USBR 5210.

10.4 *Undisturbed Specimens.*–Prepare undisturbed test specimens in accordance with USBR 5215.

11. Preparation of Apparatus

11.1 *Saturation of Porous Inserts and De-airing of End Plates*:

11.1.1 If new porous inserts with bubbling pressure greater than 5 lbf/in² (35 kPa) are to be used for the test, the end plate, connecting lines, and porous insert are to be completely submerged in de-aired water and boiled from 8 to 16 hours to ensure that all entrapped air has been removed.

11.1.2 If end plates with previously saturated porous inserts with a bubbling pressure greater than 5 lbf/in² are to be reused for the test, the end plates, connecting lines, and porous inserts are to be removed from the triaxial assembly, completely submerged in de-aired water, and boiled for a minimum of 4 hours to remove any entrapped air.

11.1.3 If new porous inserts with a bubbling pressure of 5 lbf/in² or less are to be used for the test, the end plates, connecting lines, and porous inserts are to be completely submerged in de-aired water and boiled for a minimum of 2 hours to ensure that all entrapped air has been removed.

11.1.4 If end plates with previously saturated porous inserts with a bubbling pressure of 5 lbf/in² or less are to be reused for the test, the end plates, connecting lines, and porous inserts can be left in the triaxial assembly for subsequent tests and de-aired using vacuum.

11.2 *De-airing the Triaxial Assembly* (fig. 1):

11.2.1 Attach the saturated end plates with porous inserts to the chamber bottom plate.

11.2.1.1 Place the bottom end plate with centering dowel into the hole in the center of the chamber bottom plate.

11.2.1.2 To ensure that pressure does not build up in the system when the end plate connecting lines are attached to the fittings in the chamber bottom plate, open valves F and P or G and Q slightly to allow a small amount of water to flow from the appropriate drain tube and flushing tank through the fittings in the chamber bottom plate while the appropriate end plate connecting lines are being attached.

11.2.1.3 Open valves F and P. Attach the bottom end plate connecting lines to the appropriate fittings in the chamber bottom plate. Close valves F and P.

11.2.1.4 Open valves G and Q. Attach the top end plate connecting lines to the appropriate fittings in the chamber bottom plate. Close valves G and Q.

11.2.2 Place the chamber into the groove in the chamber bottom plate.

11.2.3 Check that all system valves are closed.

11.2.4 Fill the chamber about one-half full with de-aired water.

11.2.5 Open chamber cap relief valve A.

11.2.6 Set the chamber cap in place and force the cap down until it is properly seated on the chamber.

11.2.7 Insert the piston through the opening in the chamber cap until the flange on the piston is resting on top of the chamber cap.

11.2.8 Open the valves to the top of the volume and drain tubes (valves B, C, and D).

11.2.9 Attach vacuum hoses to the tops of the volume tube, drain tubes, and the fitting on chamber cap relief valve A.

11.2.10 Attach the other ends of the vacuum hoses into a suitable vacuum source, such as a vacuum pump. Turn on the vacuum pump.

11.2.11 Apply a vacuum of approximately 20 lbf/in² (140 kPa) for 5 minutes.

11.2.12 Release the vacuum to the chamber by uncoupling the vacuum line from the vacuum pump multiport manifold. Maintain the vacuum on the volume tube and drain tubes.

11.2.13 Open volume tube drain valve E and the volume tube isolation value R, and fill the volume tube to the top of its markings with de-aired water from the chamber (vacuum is still on the volume tube).

11.2.14 Close volume tube drain valve E.

11.2.15 Open drain tube valves F and G and fill the drain tubes to the top of their markings with de-aired water from the chamber (vacuum is still on the drain tubes).

11.2.16 Close drain tube drain valves F and G.

11.2.17 Release the vacuum from the volume and drain tubes by uncoupling the appropriate vacuum lines from the vacuum pump.

11.2.18 Reattach the vacuum hose to chamber cap relief valve A to the vacuum source.

11.2.19 Open valve E and allow the water level in the volume tube to drop to about the 25-inch (635-mm) level.

11.2.20 Close volume tube drain valve E.

11.2.21 Open drain tube valves F and G, and allow the water level in the drain tubes to drop to about the 25-inch level.

11.2.22 Close drain tube valves F and G.

11.2.23 Reattach vacuum hoses to the tops of the volume tube and drain tubes.

11.2.24 Displace water back and forth between the volume and drain tubes and the chamber by repeating subparagraphs 11.2.12 through 11.2.24 until air bubbles cannot be seen in the tubes.

11.2.25 If the volume and drain tubes are not full at the end of the flushing process, fill the tubes, by opening valves E, F, and G, with vacuum applied to the top of each tube. Fill the volume and drain tubes to the top of their tube markings with de-aired water so they can be drained to the desired level for testing purposes. Close valves A, E, F, and G.

11.2.26 De-air the flushing tanks and associated lines and fittings. A rubber stopper, with a short length tubing through the hole in the center of the stopper, is inserted into the upper end of each flushing tank.

11.2.27 A vacuum hose is attached to each tube. Plug the vacuum hoses attached to the top of the flushing tanks into the vacuum source.

11.2.28 Open valve A. Slowly open valves P and Q and allow each flushing tank to fill within about 1 inch (25 mm) of the top.

11.2.29 Close flushing tank valves P and Q.

11.2.30 Release the vacuum from the flushing tanks by uncoupling the appropriate vacuum lines from the vacuum pump.

11.2.31 Plug the vacuum hose to chamber relief valve A into the vacuum source.

11.2.32 Open valves P and Q and allow the water level in the flushing tank to drop so there is about 1 inch of water remaining in each flushing tank. Close valves P and Q.

11.2.33 Displace water back and forth between the flushing tanks and the chamber by repeating subparagraphs 11.2.27 through 11.2.33 until air bubbles cannot be seen in the flushing tank. Close valves A, P, and Q.

11.2.34 Uncouple all vacuum lines from the manifold on the vacuum pump and shut off the vacuum pump.

11.2.35 Uncouple all vacuum lines from the triaxial assembly, coil the vacuum lines, and store in a suitable location for future use.

11.2.36 Do not drain the water form the chamber until the end plates and specimen are ready to be placed in the chamber as outlined in paragraph 14.

11.3 *De-Airing the Pore Pressure Transducers*:

11.3.1 Check that valves H and I are closed, then detach the pore pressure transducers from their fittings on the apparatus. Using a syringe, fill each transducer with de-aired water.

11.3.2 Open valve A. Slowly open valve H to allow a small amount of water to escape from the chamber. With water flowing, attach the transducer for the bottom end plate to the appropriate fitting. Leave valve H open.

11.3.3 Slowly open valve I to allow a small amount of water to escape from the chamber. With water flowing, attach the transducer for the top end plate to the appropriate fitting. Leave valve I open. Close valve A.

11.4 *De-Airing the Differential Pressure Transducer*:

11.4.1 Fill the flushing tank on the differential pressure transducer about two-thirds full of de-aired water. Close the volume tube isolation valve R to isolate the volume tube and differential pressure transducer from the chamber.

11.4.2 Open valve L on the differential pressure transducer. Remove the bottom plate on the differential pressure transducer by unscrewing the four cap head screws which hold it to the body of the transducer. Open valve M and fill the bottom plate with de-aired water from the flushing tank. Open valves E and K to the volume tube and allow water to flood over the exposed capsule located under the main body of the differential pressure transducer. With water flowing, place the bottom plate back on the differential pressure transducer while being careful not to entrap air. Close valve K, but leave valve M to the flushing tank slightly open to relieve any pressure which results from tightening the cap screws. Tighten the four cap head screws.

11.4.3 Flush the differential pressure transducer thoroughly by attaching a hand-held vacuum/pressure pump to the top of the flushing tank. Open valves K and M and flush the water back and forth several times between the flushing tank and the volume tube through the differential pressure transducer. When this step is complete, be sure the water level in the volume tube is near the full mark and close valve M. Open the volume tube isolation valve R.

NOTE 3.–Extreme caution must be used when flushing the differential pressure transducer, since a pressure greater than about 10 lbf/in² (70 kPa) can damage the measuring capsule inside the transducer.

12. Calibration and Standardization

12.1 Verify that component parts of the triaxial assembly are currently calibrated in accordance with the applicable calibration procedure. If the calibration is not current, perform the calibration before using the equipment for this procedure.

13. Conditioning

13.1 Prepare, place, saturate, and load the test specimen in an area isolated from drafts, vibrations, and variations in ambient temperature.

14. Procedure

14.1 All data are to be recorded on figure 3, "Specimen Placement—Data Sheet 1" (for triaxial shear tests) and on figure 4, "Triaxial Shear Test—Data Sheet 2." Perform calculations, as necessary, following step by step procedures outlined on figure 5, "Triaxial Shear Test—Data Sheet 3."

14.2 Record all identifying information pertaining to the sample, specimen, and triaxial assembly in designated blanks on data sheets 1 and 2.

14.3 Connect a hose to valve N; place the other end of the hose in an empty container or into a drain.

14.4 Open valves A and N and drain all water from the chamber. Close valve N.

14.5 Remove the piston, the chamber cap, and the chamber from the chamber bottom plate.

14.6 Verify that volume tube valve B, drain tube valves C and D, and volume tube isolation valve R are open.

14.7 Verify that all remaining valves to the chamber are closed.

14.8 Open drain tube drain valve F and lower the water in the drain tube to a level about 6 inches (150 mm) above the chamber bottom plate. The water will exit through the chamber bottom plate of the triaxial assembly and it will be necessary to absorb the water with a towel or other appropriate absorbent material.

14.9 Close valve F.

14.10 Open drain tube drain valve G and lower the water in the drain tube to a level about 2 inches (50 mm) above the chamber bottom plate. The water will exit through the bottom plate of the triaxial assembly and should be wiped up immediately.

14.11 Close valve G.

14.12 Attaching the saturated end plate with porous insert to the chamber bottom plate follows.

7-2367 (10-86)
Bureau of Reclamation

SPECIMEN PLACEMENT-DATA SHEET 1
(FOR TRIAXIAL SHEAR TESTS)

Designation USBR 5750.89

SAMPLE NO.	PROJECT	FEATURE
61W-3	Example	Example

LOCATION	DEPTH/ELEV
Area D	10.0 - 15.0 ft.

TESTED BY / DATE	COMPUTED BY / DATE	CHECKED BY / DATE

SPECIMEN TYPE: ☐ UNDISTURBED ☐ NATURAL MOISTURE ☒ COMPACTED ☐ WETTED

TEST TYPE: ☐ UU ☐ CD ☐ MULTISTAGE ☒ CU ☐ UKo ☐ DKo

SPECIMEN DIAMETER 2.000 (in) SPECIMEN LENGTH 5.000 (in)

PHYSICAL PROPERTIES

% GRAVEL 5 LIQUID LIMIT 35 (%) (USBR 5350)

% SAND 33 (USBR 5325) PLASTICITY INDEX 15 (%) (USBR 5360) CLASSIFICATION SYMBOL CL

% FINES 62 SPECIFIC GRAVITY 2.66 (USBR 5320)

		SPECIMEN 1	SPECIMEN 2	SPECIMEN 3
(1)	MASS OF WET SPECIMEN AND CONTAINER IN AIR (g)	705.3	711.1	702.9
(2)	MASS OF CONTAINER IN AIR (g)	159.6	161.8	157.3
(3)	MASS OF WET SPECIMEN (1) - (2) (g)	545.7	549.3	545.6
(4)	MASS OF DRY SPECIMEN (3)/[1 + (12)/100] (g)	473.7	476.8	473.2
(5)	MASS OF WET SPECIMEN AND CONTAINER IN WATER (g)	368.6	371.9	367.8
(6)	MASS LOSS OF WET SPECIMEN AND CONTAINER = (1) - (5) (g)	336.7	339.2	335.1
(7)	MASS OF CONTAINER IN WATER (g)	79.2	79.1	78.5
(8)	MASS LOSS OF CONTAINER = (2) - (7) (g)	80.4	82.7	78.8
(9)	MASS LOSS OF SPECIMEN = (6) - (8) (g)	256.3	256.5	256.3
(10)	SPECIMEN VOLUME = (9)/16.3498* (in^3)	15.676	15.688	15.676
(11)	DRY UNIT WEIGHT = [(4) x 3.8096*]/(10) (lbf/ft^3)	115.1	115.8	115.0
(12)	MOISTURE CONTENT (USBR 5300) (FROM BACK) (%)	15.2	15.2	15.3
(13)	SOIL VOLUME = (4)/(SpG x 16.3498*) (in^3)	10.892	10.963	10.881
(14)	PERCENT SOIL VOLUME = [(13)/(10)] x 100 (%)	69.5	69.9	69.4
(15)	WATER VOLUME = [(3) - (4)]/16.3498* (in^3)	4.404	4.434	4.428
(16)	PERCENT WATER VOLUME = [(15)/(10)] x 100 (%)	28.1	28.3	28.2
(17)	FREE AIR VOLUME = (10) - (13) - (15) (in^3)	0.380	0.291	0.367
(18)	PERCENT FREE AIR VOLUME = 100 - (14) - (16) (%)	2.4	1.8	2.4
(19)	VOID RATIO = [(10)-(13)]/(13)	0.439	0.431	0.441
(20)	DEGREE OF SATURATION = $\frac{(15)}{(10)-(13)}$ x 100 (%)	92.1	93.8	92.3

*CONSTANTS: 16.3498 g/in^3 = $(2.54)^3$ x 0.997724
($cm/in)^3$ x abs. density of water in g/cc @ 72 F.
3.8096 = (1728 in^3/ft^3) / (453.5924 g/lbm), 1 cc = 1 g @ 4°C

Figure 3. - Specimen placement—data sheet 1 (for triaxial shear tests)—example.

SAMPLE NUMBER 61W-3

MOISTURE CONTENT DATA

	SPECIMEN 1	SPECIMEN 2	SPECIMEN 3	UNITS
CONTAINER NUMBER	67	38	29	
DATE PLACED IN OVEN	1-25-89	1-25-89	1-25-89	
(1) MASS OF CONTAINER + WET SPECIMEN	362.7	375.8	386.9	☒ g
(2) MASS OF CONTAINER + DRY SPECIMEN	341.3	350.2	361.0	
(3) MASS OF CONTAINER	200.5	181.8	191.7	☐ kg
(4) MASS OF WATER = (1) – (2)	21.4	25.6	25.9	
(5) MASS OF DRY SPECIMEN = (2) – (3)	140.8	168.4	169.3	☐ lbm
(6) MOISTURE CONTENT (%) = [(4)/(5)] X 100	15.2	15.2	15.3	
COMPUTED BY AND DATE				
CHECKED BY AND DATE				

COMPACTION DATA

(_____) x (1. _____) = (_____) x (_____) = _____
dry unit wt. | 1 + moist. | wet den. | factor (USBR 5210)

_____ CONTAINER
_____ TOTAL

LAYER	MASS (g)	LENGTH (in)	LAYER	MASS (g)	LENGTH (in)
(1)			(6)		
(2)			(7)		
(3)			(8)		
(4)			(9)		
(5)			(10)		

COMPUTED BY _____ DATE _____ CHECKED BY _____ DATE _____

CONTAINER MASSES

	PARTS	MASS - SPECIMEN 1 (g) AIR	WATER	LOSS	PARTS	MASS - SPECIMEN 2 (g) AIR	WATER	LOSS	PARTS	MASS - SPECIMEN 3 (g) AIR	WATER	LOSS
CARRIAGE NO.	1	78.7	70.1	8.6	1	78.7	70.1	8.6	1	78.7	70.1	8.6
MEMBRAINE NO.	3MN	17.3	-1.6	18.9	4MN	18.5	-1.7	20.2	5MN	14.5	-1.3	15.8
END PLATES	3EP	60.0	10.0	50.0	4EP	61.0	10.0	51.0	5EP	60.5	9.0	51.5
2-'0'- RINGS		3.6	0.7	2.9		3.6	0.7	2.9		3.6	0.7	2.9
MISC.												
TOTAL		159.6	79.2	80.4		161.8	79.1	82.7		157.3	78.5	78.8

COMPUTED BY _____ DATE _____ CHECKED BY _____ DATE _____

Figure 3. - Specimen placement—data sheet 1 (for triaxial shear tests)—example—Continued.

7-2371 (10-86)
Bureau of Reclamation

TRIAXIAL SHEAR TEST-DATA SHEET 2

Designation USBR 5750.89

SAMPLE NO.	SPECIMEN NO.	PROJECT	FEATURE
61W-3	1	Example	Example

TESTED BY	DATE	COMPUTED BY	DATE	CHECKED BY	DATE

Displacement rate 0.001 ☒ in/min ☐ mm/min

Applied lateral pressure 78.0 ☒ lbf/in² ☐ kPa

Back pressure 53.4 ☒ lbf/in² ☐ kPa

Barometric pressure 12.0 ☒ lbf/in² ☐ kPa

Pore-Pressure Coefficient(B) (saturation parameter) 0.98

Volume Change of System — USBR 1450

Max. Lat. 1 5.0 Slope 1 0.0214 Intercept 1 0.000

Max. Lat. 2 20.0 Slope 2 0.0062 Intercept 2 0.107

Max. Lat. 3 100.0 Slope 3 0.0020 Intercept 3 0.200

Slope 4 0.0010 Intercept 4 0.368

Chamber No. 24 Compression test machine No. 1

(a) Load piston area, A_p 0.1964 ☒ in² ☐ cm²

(b) Volume tube factor, VT_f 0.122 ☒ in³/in ☐ cm³/cm

(c) Drain tube factor, DT_f 0.0247 ☒ in³/in ☐ cm³/cm

(d) Temp. corr. coefficent, T_f 0.0115 ☒ in³/°F ☐ cm³/°C

	Applied Lateral press. (lbf/in² / kPa) (1)	Deviator Load (lbf / Newtons) (2)	Axial Specimen Deformation (in / mm) (3)	Volume Tube Reading (in / cm) (4)	Pore Pressure Top (lbf/in² / kPa) (5)	Pore Pressure Bottom (lbf/in² / kPa) (6)	Drain Tube Reading Tube 1 (in / cm) (7)	Drain Tube Reading Tube 2 (in / cm) (8)	Temperature (°F / °C) (9)
1	0.0	0.0	1.210	5.95	0.0	0.0			67.3
2	78.0	0.0	1.210	9.74	53.0	53.0			67.9
3	78.0	15.0	1.130	9.54	53.4	53.4			68.0
4	78.0	70.0	1.080	9.46	64.3	65.0			68.0
5	78.0	79.0	1.030	9.36	66.5	66.7			68.1
6	78.0	84.0	0.980	9.30	68.0	68.1			68.0
7	78.0	90.0	0.932	9.22	68.6	68.9			67.9
8	78.0	98.0	0.830	9.05	68.8	69.5			67.7
9	78.0	98.0	0.820	9.04	68.8	69.5			67.6
10	78.0	106.0	0.730	8.87	68.3	69.5			67.5
11	78.0	116.0	0.620	8.70	67.5	69.1			67.3
12	78.0	123.0	0.530	8.58	66.9	68.4			67.1
13	78.0	132.0	0.440	8.46	66.2	67.6			66.8
14	78.0	143.0	0.340	8.32	65.4	66.7			66.5
15	78.0	148.0	0.230	8.17	64.6	65.7			66.3
16	78.0	154.0	0.130	8.02	63.8	64.7			66.1
17	0.0	0.0	0.150	7.33	-1.3	-1.2			66.0
18									
19									
20									

GPO 852 - 188

Figure 4. – Triaxial shear test—data sheet 2—example.

7-2372 (1-89)
Bureau of Reclamation

TRIAXIAL SHEAR TEST-DATA SHEET 3

Designation USBR 5750.89

SAMPLE NO.	SPECIMEN NO.	PROJECT	FEATURE
61W-3	1	Example	Example

Initial specimen length (L_o)	Specimen length at start of shear L_s	Initial specimen area ($A_o = V_o \div L_o$)	Initial specimen volume (V_o)
5.000 ☒ in ☐ mm	4.920 ☒ in ☐ mm	3.135 ☒ in² ☐ mm²	15.676 ☒ in³ ☐ mm³

TESTED BY — DATE — COMPUTED BY — DATE — CHECKED BY — DATE

	Applied lateral pressure (from column I) (10)	Corrected deviator load $P_{dc} = (2) - (10)(A_p)$	Axial specimen deformation* $\Delta L = (3_i) - (3_I)$	Volume tube change* $\Delta VT = (4_i) - (4_I)$	Converted volume tube change $\Delta VT_n = (13) \times (VT_F)$	System volume change due to applied lateral pressure $\Delta VC = [(10) - (LTPR)] \times SL \div Y$	Volume change due to piston movement $\Delta V_p = (12) \times (A_p)$	Volume change due to temperature change $\Delta TV = [(9_i) - (9_I)] \times (T_F)$	Total volume change $\Delta V = (14) + (15) - (16) + (17)$	Specimen volume $V_i = V_o + (18)$	Specimen length $L_i = L_o - (12)$	Axial strain from start of shear $\epsilon = \frac{L_s - (20_i)}{L_s} \times 100$	Volume strain from initial $\epsilon_v = \frac{(18) \times (-1.0)}{V_o} \times 100$	Volume strain from start of shear $\epsilon_{vs} = \frac{[(19) - (19)\text{at start of shear}] \times (-1.0)}{\text{spec. volume at start of shear}} \times 100$	Effective lateral stress $\sigma'3' = (10) - (6)$ ** (Minor effective principal stress)	Corrected specimen area $A_c = (19) \div (20)$	Deviator stress $\sigma_d = (11) \div (25)$	Effective axial stress $\sigma_1' = (24) + (26)$ (Major effective principal stress)	Effective Stress ratio $S_r = (27) \div (24)$	$p' = [(27) + (24)] \div 2$	$q' = (26) \div 2$	Effective normal stress $\sigma' = (29) - [(30) \times \sin \phi]$	Shear stress $\tau' = (30) \times \cos \phi$	Top excess pore pressure $\Delta U_{et} = (5) - (3)$ prior to start of shear	Bottom excess pore pressure $\Delta U_{eb} = (6) - (6)$ prior to start of shear	Pore pressure coefficient $A = \frac{(33) \text{ or } (34)}{(26)}$
	lbf/in² kPa	lbf kN	in cm	in cm³	in³ cm³	in³ cm³	in³ cm³	in³ cm³	in³ cm³	in³ cm³	in cm	%	%	%	lbf/in² kPa	in² cm²	lbf/in² kPa	lbf/in² kPa		lbf/in² kPa	lbf/in² kPa	lbf/in² kPa	lbf/in² kPa	lbf/in² kPa	lbf/in² kPa	lbf/in² kPa
	(10)	(11)	(12)	(13)	(14)	(15)	(16)	(17)	(18)	(19)	(20)	(21)	(22)	(23)	(24)	(25)	(26)	(27)	(28)	(29)	(30)	(31)	(32)	(33)	(34)	(35)
1	0.0	0.0	0.000	0.00	0.000	0.000	0.000	0.000	0.000	15.676	5.000	—	0.00	—	0.0	3.135	0.00	0.00	0.00	—	—	—	—	—	—	—
2	78.0	-15.3	0.000	-3.79	-0.462	0.316	0.000	-0.007	-0.153	15.523	5.000	—	0.98	—	25.0	3.105	0.00	25.00	1.00	—	—	—	—	—	—	—
3	78.0	-0.3	0.080	-3.59	-0.438	0.316	0.016	-0.008	-0.146	15.530	4.920	0.00	0.93	0.00	24.6	3.157	0.00	24.60	1.00	24.6	0.0	24.6	0.0	0.4	0.4	0.0
4	78.0	54.7	0.130	-3.51	-0.428	0.316	0.026	-0.008	-0.146	15.530	4.870	1.02	0.93	0.00	13.0	3.189	17.15	30.15	2.32	21.6	8.6	16.9	7.2	11.3	12.0	0.70
5	78.0	63.7	0.180	-3.41	-0.416	0.316	0.035	-0.009	-0.144	15.532	4.820	2.03	0.92	-0.01	11.3	3.222	19.77	31.07	2.75	21.2	9.9	15.8	8.3	13.5	13.7	0.69
6	78.0	68.7	0.230	-3.35	-0.409	0.316	0.045	-0.008	-0.146	15.530	4.770	3.05	0.93	-0.00	9.9	3.256	21.10	31.00	3.13	20.5	10.6	14.7	8.9	15.0	15.1	0.72
7	78.0	74.7	0.278	-3.27	-0.399	0.316	0.055	-0.007	-0.145	15.531	4.722	4.02	0.92	-0.01	9.1	3.289	22.71	31.81	3.50	20.5	11.4	14.3	9.6	15.6	15.9	0.70
8	78.0	82.7	0.380	-3.10	-0.378	0.316	0.075	-0.005	-0.142	15.534	4.620	6.10	0.91	-0.03	8.5	3.362	24.60	33.10	3.89	20.8	12.3	14.1	10.3	15.8	16.5	0.67
9	78.0	82.7	0.390	-3.09	-0.377	0.316	0.077	-0.003	-0.141	15.535	4.610	6.30	0.90	-0.03	8.5	3.370	24.54	33.04	3.89	20.8	12.3	14.1	10.3	15.8	16.5	0.67
10	78.0	90.7	0.480	-2.92	-0.356	0.316	0.094	-0.002	-0.136	15.540	4.520	8.13	0.87	-0.06	8.5	3.438	26.38	34.88	4.10	21.7	13.2	14.5	11.1	15.3	16.5	0.63
11	78.0	100.7	0.590	-2.75	-0.336	0.316	0.116	0.000	-0.136	15.540	4.410	10.37	0.87	-0.06	8.9	3.524	28.58	37.48	4.21	23.2	14.3	15.4	12.0	14.5	16.1	0.56
12	78.0	107.7	0.680	-2.63	-0.321	0.316	0.134	0.002	-0.137	15.539	4.320	12.20	0.87	-0.06	9.6	3.597	29.94	39.54	4.12	24.6	15.0	16.5	12.6	13.9	15.4	0.51
13	78.0	116.7	0.770	-2.51	-0.306	0.316	0.151	0.006	-0.135	15.541	4.230	14.02	0.86	-0.07	10.4	3.674	31.76	42.16	4.05	26.3	15.9	17.7	13.3	13.2	14.6	0.46
14	78.0	127.7	0.870	-2.37	-0.289	0.316	0.171	0.009	-0.135	15.541	4.130	16.06	0.86	-0.07	11.3	3.763	33.94	45.24	4.00	28.3	17.0	19.1	14.3	12.4	13.7	0.40
15	78.0	132.7	0.980	-2.22	-0.271	0.316	0.192	0.012	-0.135	15.541	4.020	18.29	0.86	-0.07	12.3	3.866	34.32	46.62	3.79	29.5	17.2	20.2	14.4	11.6	12.7	0.37
16	78.0	138.7	1.080	-2.07	-0.253	0.316	0.212	0.014	-0.135	15.541	3.920	20.33	0.86	-0.07	13.3	3.965	34.98	48.28	3.63	30.8	17.5	21.3	14.7	10.8	11.7	0.33
17	0.0	0.0	1.060	-1.38	-0.168	0.000	0.208	0.015	-0.361	15.315	3.940	19.92	2.30	1.38	1.2	3.887	0.00	1.2	1.00	1.2	0.0	1.2	—	—	—	—
18																										
19																										
20																										

–sign designates start of shear (touch)

*Subscript I denotes initial reading
Subscript i denotes any subsequent reading

**Bottom pore pressure shown; may use top pore pressure value (10) - (5) or average pore pressure, (10) - ([(5) + (6)] ÷ 2)

GPO 858-792

Ø – _____

Figure 5. – Triaxial shear test—data sheet 3—example.

14.12.1 Place the bottom end plate with centering dowel into the centering hole in the center of the chamber bottom plate.

14.12.2 Open valve G slightly to allow a very small amount of water to flow from the drain tube through the fitting. With water flowing, attach the bottom end plate connecting tube to the chamber bottom plate.

14.12.3 Close valve G.

14.12.4 Open valve F slightly to allow a very small amount of water to flow from the drain tube through the fitting.

14.12.5 With water flowing, attach the top end plate connecting line to the chamber bottom plate.

14.12.6 Do not close valve F because this prevents cavitation of the system and keeps the top end plate porous insert moist.

14.13 Apply a small amount of silicon grease to the sides of the top and bottom end plates to aid in sealing the specimen membrane to the end plates.

14.14 Placing and sealing the soil specimen on the end plates follows.

14.14.1 Obtain a specimen prepared in accordance with either USBR 5210 or 5215. At this point, the specimen should be enclosed in a membrane with caps on both ends with the membrane sealed to the caps with O-rings.

14.14.2 Remove the O-rings from both ends of the specimen.

14.14.3 Roll the membrane from the end cap on one end of the specimen and remove the end cap from that end of the specimen—either end may be used unless otherwise specified.

14.14.4 Place the test specimen on the bottom end plate. Roll the membrane down over the sides of the bottom end plate.

14.14.5 Place two O-rings, of appropriate size, on the bottom of the O-ring expander. Position the expander around the specimen with the bottom of the expander around the middle of the bottom end plate. Roll the O-rings into position around the end plate to seal the membrane.

14.14.6 Remove the expander from around the specimen.

14.14.7 Place two O-rings on the top end of the O-ring expander. Position the expander at approximately midheight of the test specimen with the top of the expander near the middle of the top end plate.

14.14.8 Remove the O-rings from the top end cap. Roll the membrane down from the top of the specimen and remove the end cap.

14.14.9 Blot any excess water from the surface of the porous insert in the top end plate and close valve F.

14.14.10 Carefully place the top end plate into position on top of the test specimen.

14.14.11 Roll the membrane up over the sides of the top end plate. Roll the O-rings from the expander onto the membrane so the membrane seals against the middle of the top end plate. Remove the expander from around the specimen.

NOTE 4.–The expander is split into halves and is hinged on one side to facilitate removal from around the specimen.

14.15 Lightly grease the upper and lower ends of the chamber.

14.16 Carefully place the chamber into position in the groove in the chamber bottom plate.

14.17 Attach a hose from the de-aired water source to the de-aired water source (valve N) line and begin filling the chamber through the chamber bottom plate with de-aired water. As water rises in the chamber, use a squeeze bulb to remove any air bubbles that may be present on the bottom and sides of the chamber and specimen.

14.18 Fill the chamber completely with de-aired water. Close valve N.

14.19 Open valve A and set the chamber cap in place. Force the chamber cap down onto the chamber until it is properly seated.

14.20 Open valve N and continue filling the chamber with de-aired water until water flows out of chamber cap relief valve A. Close valve A and continue filling so that any air remaining in the system is forced up through the ball bushing.

14.21 When water flows out of the top of the ball bushing, close valve N.

14.22 Screw the chamber bolts into the chamber bottom plate and set the chamber cap hold down plate into place.

14.23 Secure the chamber cap to the chamber bottom plate by screwing the four nuts onto the four chamber bolts; tighten the nuts in a staggered sequence to about 50 ft-lbf torque.

14.24 Lightly grease the piston, open valve A, and carefully push the piston through the ball bushing in the center of the chamber cap until the piston tip fits into the socket in the top end plate. Check that the piston is firmly in contact with the top end plate, but does not apply excessive pressure to the specimen (by feel). Close valve A.

14.25 Attach the axial deformation indicator (fig. 1) and adjust its range so that deformation of the test specimen can be recorded.

14.26 Open valves L and K to the differential pressure transducer.

14.27 Attach and secure the piston retainer bar. Be careful not to disturb the specimen. The purpose of the piston retainer bar is to prevent the piston from being forced out of the chamber when lateral pressure is applied inside the chamber.

14.28 Open valve A. Slowly open volume tube valve E until water flows out of chamber cap relief valve A. When the level of water in the volume tube has reached the desired level for starting the test—usually the 10-inch (250-mm) level—close valve A.

NOTE 5.–The desired volume tube water level is dependent on the volume change potential of the soil being tested. For test specimens whose anticipated volume change is slight, the volume tube can be filled to a higher level than for test specimens whose anticipated volume change is great.

14.29 Make sure the air pressure regulators are set to zero and attach air pressure hoses to the tops of the volume tube and drain tubes.

14.30 Read and record:

Initial applied lateral pressure	Top and bottom pore pressure readings
Deviator load reading	Tube 1 and tube 2 drain tube readings
Axial specimen deformation reading	Chamber fluid temperature
Volume tube reading	Date

as shown on figure 4 (date sheet 2).

14.31 Specimen saturation by application of back pressure follows.

14.31.1 Open valve E and apply 5 lbf/in² (35 kPa) lateral pressure to the fluid in the chamber to seat the triaxial assembly.

14.31.2 Determine and record appropriate data as shown on data sheet 2 (fig. 4).

14.31.3 Open valves F and G and increase the lateral pressure and back pressure simultaneously, maintaining a difference of approximately 2 to 5 lbf/in² between the two pressures. Never allow the back pressure to equal or exceed the lateral pressure.

NOTE 6. - Time required for the pore fluid to reach an equilibrium condition under the applied back pressure can vary greatly depending on soil type, intial degree of saturation, and size of specimen. Normally the back pressure can be raised to 60 lbf/in² (414 kPa) over a period of 30 minutes.

NOTE 7.- For most soils, a back pressure of 60 lbf/in² should be applied before the pore pressure coefficient B is checked.

14.31.4 Close drain tube valves F and G.

14.31.5 Increase the lateral pressure by 5 lbf/in².

14.31.6 Open pore pressure transducer valves H and I. Determine and record the pore pressure at the top and bottom of the specimen. Close valves H and I.

NOTE 8.-To determine if saturation is complete, the pore pressure coefficient B is calculated. Specimens are considered saturated if B is equal to or greater than 0.95 or if B remains unchanged after application of additional back pressure increments. See figure 6 for an example of B coefficient calculations. An alternative method of determining if saturation is complete is to first measure pore water pressure at a point when consolidation is thought to be complete. Then immediately close valves C and D. After 10 minutes, measure pore water pressure. Calculate the percent pore pressure dissipation using the following:

$$U = \frac{u - u_B}{u_o - u_B} \times 100\%$$

where:

U = percent pore pressure dissipation, %
u = pore pressure after valves C and D closed, lbf/in²
u_o = pore pressure before closure of valves C and D, lbf/in²
u_B = back pressure, lbf/in²

If U is equal to or greater than 95 percent, the consolidation of the test specimen is complete.

NOTE 9.-For many specimens, the pore pressure may decrease after an immediate increase and then increase slightly with time. If the pore pressure immediately equals the lateral pressure this may indicate a leak of chamber fluid into the specimen. Decreasing pore pressure with time may indicate a leak in a part of the pore pressure measurement system located outside the chamber.

14.31.7 Compute the B value by dividing the value of the induced pore pressure increment (response due to applied lateral pressure increment) by the increase in applied lateral pressure increments (5 lbf/in²). If the B value is less than 0.95, continue the back-pressure process by repeating subparagraph 14.31.5. If the B value is equal to or greater than 0.95, initiate the consolidation process starting at subparagraph 14.32. Normally, the specimen should be allowed to set for at least 30 minutes between B value determinations.

14.32 Consolidating the specimen follows.

NOTE 10.-The objective of the consolidation phase of the test is to allow the specimen to reach equilibrium in a drained state under the effective consolidation pressure for which the shear strength determination is required. During consolidation, data are obtained for use in determining when consolidation is complete.

14.32.1 Open specimen drain tube valves F and G. Increase the lateral pressure until the difference between the lateral pressure and the back pressure equals the desired effective consolidation pressure.

14.32.2 At increasing intervals of elapsed time (approximately 0.1, 0.2, 0.5, 1, 2, 4, 8, and 24 minutes and 1, 2, 4, and 8 hours, etc.) observe and record volume tube height readings.

14.32.3 Allow the specimen to consolidate under the specified effective consolidation pressure until 100-percent primary consolidation is obtained. Consolidation is considered complete based on a marked reduction in the slope of the specimen volume versus square root of time plot. Figure 7 shows an example of this type of plot.

14.33 Determine the "touch" point.

14.33.1 After completion of primary consolidation, specimen drain tube valves F and G are closed.

14.33.2 Attach a calibrated load cell to the crosshead of the compression test machine. Carefully place the triaxial assembly in the compression test machine.

14.33.3 Align the load cell and load transfer piston of the triaxial assembly.

14.33.4 Compute deviator load due to applied lateral pressure.

NOTE 11.-Deviator load due to applied lateral pressure is based on the area of the piston. The piston area [item (a) from "Triaxial Shear Test—Data Sheet 2, fig. 4] is multiplied by the applied lateral pressure to obtain the force the piston exerts on the load cell. This force is subtracted from the deviator load to obtain the actual axial force applied to the specimen.

14.33.4.1 When deviator load due to applied lateral pressure has been computed, determine and record all values as described in subparagraph 14.31. Begin to apply load slowly to the piston. When the deviator load reading just equals deviator load due to applied lateral

7-2410 (1-89)
Bureau of Reclamation

TRIAXIAL SHEAR TEST-B-VALUE DETERMINATION

Designation USBR 5750 - 89

SAMPLE NO.	SPECIMEN NO.	PROJECT	FEATURE
61W-3	1	Example	Example

TESTED BY	DATE	COMPUTED BY	DATE	CHECKED BY	DATE

DATE	TIME	APPLIED LATERAL PRESSURE ☒ lbf/in² ☐ KPa			TOP PORE PRESSURE ☒ lbf/in² ☐ KPa			BOTTOM PORE PRESSURE ☒ lbf/in² ☐ KPa			AVERAGE PORE PRESSURE DIFFERENCE $\Delta\mu = [(8) + (11)]/2$	B - VALUE $B = \frac{(12)}{(5)}$
		INITIAL READING σ_{3_I}	FINAL READING σ_{3_F}	DIFFERENCE $\Delta\sigma_3 = (4) - (3)$	INITIAL READING μ_{T_I}	FINAL READING μ_{T_F}	DIFFERENCE $\Delta\mu_T = (7) - (6)$	INITIAL READING μ_{B_I}	FINAL READING μ_{B_F}	DIFFERENCE $\Delta\mu_B = (10) - (9)$		
(1)	(2)	(3)	(4)	(5)	(6)	(7)	(8)	(9)	(10)	(11)	(12)	(13)
1-15-89	0800	59.7	64.7	5.0	58.5	62.4	3.9	58.5	62.7	4.2	4.1	0.82
1-15-89	1500	64.7	69.7	5.0	62.7	67.6	4.9	62.7	67.6	4.9	4.9	0.98

Figure 6. - Triaxial shear test—*B* -value determination—example.

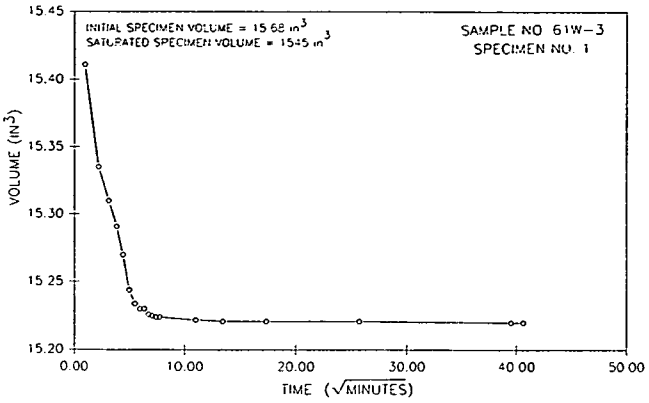

Figure 7. - Specimen volume versus square root of time—example.

pressure (corrected deviator load equals zero), stop the piston movement. This is "touch" point—the point at which the piston just contacts the top end plate on the specimen.

14.33.4.2 When "touch" has been established, determine and record all values as described in subparagraph 14.30. Place a minus sign in the left hand margin of data sheet 2 (fig. 4) directly opposite the data line at which "touch" was obtained. The minus sign serves as an easy reference as to when "touch" was achieved.

14.34 *Rate of Loading*.–The specimen may be compressed in one of two manners, either (1) by controlling the rate of applied axial compressive stress or (2) by controlling the rate of axial strain.

14.34.1 Controlled rate of axial stress:

14.34.1.1 Axial load is applied to the specimen in such a manner that the rate of stress increase is constant.

14.34.1.2 The axial stress application rate should be based on the field conditions being modeled in the laboratory.

14.34.2 Controlled rate of axial strain:

14.34.2.1 If the specimen is to be compressed at a controlled rate of axial strain, a rate of 0.02-percent per minute should be used unless otherwise specified in the testing request. Table 4 lists recommended displacement rates and strain rates for various specimen dimensions.

Table 4. - Recommended displacement and strain rate for various test specimen sizes.

Test specimen size				Displacement rate		Strain rate
Diameter	Height	Diameter	Height			
in	in	mm	mm	in/min	mm/min	%
2.0	5.0	50.8	127.0	0.0010	0.0254	0.02
2.8	7.0	71.1	177.8	.0014	.0356	.02
6.0	15.0	152.4	381.0	.0030	.0762	.02
9.0	22.5	228.6	571.5	.0045	.1143	.02

14.35 *Data Acquisition Rate*:

14.35.1 If an automatic data aquisition system is used, data readings should be recorded at 0.20-percent axial strain intervals as shown on table 5.

Table 5. - Data collection intervals for various test specimen sizes.

Test specimen size				Data collection interval		
Diameter	Height	Diameter	Height	Displacement		Axial strain
in	in	mm	mm	in	mm	%
2.0	5.0	50.8	127.0	0.0010	0.254	0.20
2.8	7.0	71.1	177.8	.0014	0.356	.20
6.0	15.0	152.4	381.0	.0030	0.762	.20
9.0	22.5	228.6	571.5	.0045	1.143	.20

14.36 *Compressive Stress Application*:

14.36.1 Single stage compression of multiple specimens (standard procedure):

14.36.1.1 Start loading the specimen at the prescribed rate; determine and record all parameters at the recommended interval.

14.36.1.2 Continue loading the specimen until axial strain equals 20 percent.

NOTE 12.–Due to data acquisition system restraints in the Bureau's geotechnical laboratory in Denver, Colorado, the triaxial test may be continued until axial strain is approximately 20 percent. However, it may be appropriate to discontinue the test at some other point if possible, such as 5-percent axial strain past maximum deviator stress.

14.36.1.3 When loading is complete, stop the compression test machine; unload the specimen until the load indicator registers zero.

14.36.2 Multistage compression of single specimen (optional procedure):

14.36.2.1 Start loading the specimen at the prescribed rate, determine and record all parameters at the recommended interval.

14.36.2.2 Compute, plot, and monitor the stress difference (deviator stress), axial strain, and effective stress ratio.

14.36.2.3 Continue loading the specimen until one of the following criteria are met.

14.36.2.3.1 Axial strain equals 5 percent (20% at final lateral pressure).

14.36.2.3.2 Stress difference or effective stress ratio curve starts to peak or flatten out.

14.36.2.4 When the criteria started in subparagraph 14.36.2.3 is satisfied, stop the compression test machine and unload the specimen until the load indicator registers zero.

14.36.2.5 Apply the next lateral pressure and repeat the procedure beginning at subparagraph 14.32.

14.37 Carefully release the lateral pressure. Close all valves to the chamber. Open valve A. Attach the drain tube to valve N. Open valves N and R and drain the water from the chamber.

14.38 Engage the controls on the compression test machine which allow manual control of the loading device. Back the load transfer piston away from the load cell.

14.39 Dismantle the triaxial assembly.

14.40 Photograph the specimen while it is still on the chamber bottom plate with the end plates attached.

14.41 Release the membrane from the top and bottom end plates by moving or removing the O-rings and rolling the ends of the membrane off of the end plates.

14.42 Carefully remove the specimen from the end plates.

14.43 Carefully remove the membrane from the specimen.

14.44 Photograph the specimen with the membrane removed.

14.45 Determine the moisture content of the test specimen, in accordance with USBR 5300, using the entire specimen or a representative portion taken along the entire length of the specimen.

14.46 For single stage compression of multiple specimens, repeat CU triaxial shear tests on new specimen at specified lateral pressures until at least three specimens have been tested and resulting data have been recorded.

15. Calculations

15.1 Perform all calculations on "Triaxial Shear Test—Data Sheet 3 (fig. 5) as specified, and record in the appropriate columns.

15.2 All calculations are based on data recorded on data sheets 1 and 2 (figs. 3 and 4).

15.2.1 Enter the following information on the heading of figure 5 (data sheet 3):

Sample No.,
Specimen No.,
Initial specimen volume (V_o) (from fig. 3 data sheet 1),
Initial specimen length (L_o) (from data sheet 1), and
Compute the initial specimen area (A_o) by dividing V_o by L_o.

15.2.2 *Applied lateral pressure* [fig. 5, col. (10)] is the applied lateral pressure from figure 4 [data sheet 2, (col. 1)].

15.2.3 *Corrected deviator load* [col. (11)] is the deviator load corrected to account for upward force due to lateral pressure acting on the piston.

$$P_{dc} = P_d - (A_p\,\sigma_3) \quad (1)$$

where:
P_{dc} = corrected deviator load, lbf
P_d = deviator load, lbf
A_p = load piston area, in^2
σ_3 = applied lateral pressure, lbf/in^2

15.2.4 *Axial specimen deformation* [col. (12)] is calculated.

$$\Delta L = L_1 - L_i \quad (2)$$

where:
ΔL = axial specimen deformation (change in specimen length, in
L_1 = initial axial specimen deformation indicator reading, in
L_i = subsequent axial deformation indicator reading, in

15.2.5 *Volume tube change* [col. (13)] is the change in fluid level (linear units) in the volume tube.

$$\Delta VT = VT_1 - VT_i \quad (3)$$

where:
ΔVT = volume tube change, in
VT_1 = initial volume tube reading, in
VT_i = subsequent volume tube reading, in

15.2.6 *Converted volume tube change* [col. (14)] is the volume tube converted from linear to volumetric units.

$$\Delta VT_n = \Delta VT\ (VT_f) \quad (4)$$

where:
ΔVT_n= converted volume tube change, in^3
ΔVT = volume tube change, in
VT_f = volume tube factor, in^3/in, from USBR 1455

15.2.7 *System volume change due to applied lateral pressure* [col. (15)] is the expansion or contraction of the triaxial system (in cubic inches) due to a change in applied lateral pressure (see fig. 8).

$$\Delta VC = [(\sigma_3 - LTPR_i)]\ (SL_i) + Y_i \quad (5)$$

where:
ΔVC = system volume change, in^3
σ_3 = applied lateral pressure, lbf/in^2
$LTPR_i$ = lateral pressure intercept for lateral pressure increment considered, lbf/in^2

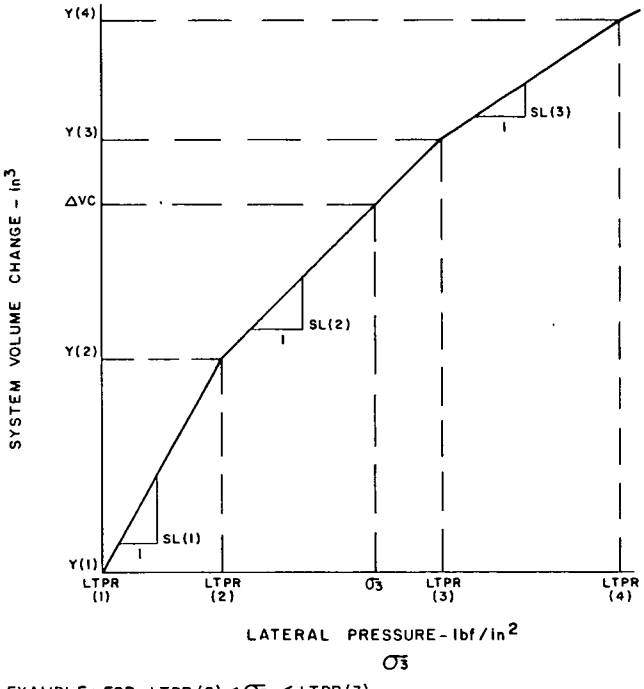

Figure 8. - Volume change of system due to applied lateral pressure.

SL_i = slope of line relating volume change to applied lateral pressure for pressure increment considered, in³/(lbf/in²)
Y_i = volume change intercept for lateral pressure increment considered, in²

NOTE 13.- A curve for system volume change versus lateral pressure must be developed for each triaxial shear test system and is unique for that particular system (see fig. 8). This curve is developed when the triaxial shear test is calibrated (USBR 1450).

15.2.8 *Volume change due to piston movement* [col. (16)] is due to displacement of water by piston entry into the chamber.

$$\Delta V_p = \Delta L \, A_p \tag{6}$$

where:
ΔV_p = volume change due to piston volume movement, in³
ΔL = change in specimen length, in
A_p = load piston area, in²

15.2.9 *Volume change due to temperature change*, [col. (17)] is the change of the confining fluid in the cell due to temperature change.

$$\Delta TV = T_f \, (T_1 - T_i) \tag{7}$$

where:
ΔTV = volume change due to temperature change, in³
T_f = temperature correction coefficient, in³/°F
T_1 = initial temperature reading of water in chamber, °F
T_i = subsequent temperature reading of water in chamber, °F

See appendix X1 for derivation of the temperature correction coefficient.

15.2.10 *Total volume change* [col. (18)] is calculated.

$$\Delta V = \Delta VT_n + \Delta VC - \Delta V_p + \Delta TV \tag{8}$$

where:
ΔV = total volume change, in³
ΔVT_n = converted volume tube change, in³
ΔVC = system volume change due to applied lateral pressure, in³
ΔV_p = volume change due to piston movement, in³
ΔTV = volume change due to temperature change, in³

15.2.11 *Specimen volume* [col. (19)] is the volume of the specimen at any subsequent point during the test.

$$V_i = V_o + \Delta V \tag{9}$$

where:
V_i = subsequent specimen volume, in³
V_o = initial specimen volume, in³
ΔV = total volume change, in³

15.2.12 *Specimen length* [col. (20)] is the length of the specimen at any subsequent point during the test.

$$L_i = L_o - \Delta L \tag{10}$$

where:
L_i = subsequent specimen length, in
L_o = initial specimen length, in
ΔL = axial specimen deformation (change in specimen length), in

15.2.13 *Axial strain from start of shear*, ϵ [col. (21)] is calculated.

$$\epsilon = 100 \left(\frac{L_s - L_i}{L_s} \right) \tag{11}$$

where:
ϵ = axial strain from start of shear, %
L_s = specimen length at start of shear, in
L_i = subsequent specimen length, in
100 = convert from decimal to percent

15.2.14 *Volume strain from initial*, ϵ_v [col. (22)] is the volumetric strain, in percent of the initial specimen volume.

$$\epsilon_v = 100 \left[\frac{\Delta V \, (-1.0)}{V_o} \right] \tag{12}$$

where:
ϵ_v = volume strain from initial, %
ΔV = total volume change, in³
-1.0 = constant to establish sign convention where positive values indicate compression and negative values indicate expansion
V_o = initial specimen volume, in³
100 = convert from decimal to percent

15.2.15 *Volume strain from start of shear*, ϵ_{vs} [col. (23)] is the volumetric strain in percent of specimen volume at start of shear.

$$\epsilon_{vs} = 100 \left[\frac{(V_i - V_{is}) \, (-1.0)}{V_{is}} \right] \tag{13}$$

where:
ϵ_{vs} = volume strain from start of shear, %
V_i = specimen volume at subsequent reading, in³
V_{is} = specimen volume at start of shear, in³
-1.0 = constant to establish the sign convention where positive values indicate compression and negative values indicate expansion
100 = convert from decimal to percent

15.2.16 Effective lateral stress (col. (24)] is calculated.

$$\sigma_3' = \sigma_3 - u \tag{14}$$

where:
σ_3' = effective lateral stress (minor effective principal stress), lbf/in²
σ_3 = applied lateral pressure, lbf/in²
u = pore pressure, either top (u_w) or bottom (u_a) pore pressures may be used or an average of the two depending on the test condition being modeled, lbf/in²

15.2.17 *Corrected specimen area* [col. (25)] is calculated.

$$A_c = \frac{V_i}{L_i} \tag{15}$$

where:
A_c = corrected specimen area, in^2
V_i = specimen volume at a subsequent reading, in^3
L_i = specimen length at same subsequent reading, in

15.2.18 *Deviator stress*, σ_d [col. (26)] is calculated.

$$\sigma_d = \frac{P_{dc}}{A_c} \quad (16)$$

where:
σ_d = deviator stress, lbf/in^2
P_{dc} = corrected deviator load at a given reading, lbf
A_c = corrected specimen area at same given reading, in^2

15.2.19 *Effective axial stress* [col. (27)] is calculated.

$$\sigma_1' = \sigma_3' + \sigma_d \quad (17)$$

where:
σ_1' = effective axial stress (major effective principal stress), lbf/in^2
σ_3' = effective lateral stress (minor effective principal stress), lbf/in^2
σ_d = deviator stress, lbf/in^2

15.2.20 *Effective stress ratio* [col. (28)] is calculated.

$$S_r = \frac{\sigma_1'}{\sigma_3'} \quad (18)$$

where:
S_r = effective stress ratio, dimensionless
σ_1' = effective axial stress (major effective principal stress) lbf/in^2
σ_3' = effective lateral stress (minor effective principal stress), lbf/in^2

15.3 *$p - q$ Diagram.*–A convenient method of plotting the state of stress, for a given soil specimen, is to plot stress points on a $p - q$ diagram. The coordinate system for the $p - q$ diagram may be defined in terms of total or effective stress as follows:

Total stress	*Effective stress*
$p = \frac{(\sigma_1 + \sigma_3)}{2}$	$p' = \frac{(\sigma_1' + \sigma_3')}{2}$
$q = \frac{(\sigma_1 - \sigma_3)}{2} = \frac{\sigma_d}{2}$	$q' = q = \frac{\sigma_d}{2}$

where:
σ_1 = major principal stress, lbf/in^2
σ_3 = minor principal stress, lbf/in^2
σ_d = deviator stress, lbf/in^2
σ_1' = major effective principal stress, lbf/in^2
σ_3' = minor effective principal stress, lbf/in^2

15.3.1 Record the calculated values of p' and q' or p and q in columns 29 and 30, respectively, on data sheet 3 (fig. 5).

15.3.2 Repeat calculations described in subparagraphs 15.2.2 through 15.3.1 for all recorded data for all specimens.

15.3.3 For each specimen tested (minimum of 3), select an appropriate failure stress and locate corresponding $p' - q'$ or $p - q$ values which are referred to as p_f', q_f' or p_f, q_f.

15.3.3.1 Failure of the test specimen may be defined in several ways:

(1) First maximum or maximum principal effective stress ratio (σ_1'/σ_3') maximum

(2) First maximum or maximum deviator stress (σ_d) maximum

(3) Shear stress at a prescribed axial strain

(4) Any other criteria consistent with the condition being analyzed.

15.3.4 Plot all calculated values of $p' - q'$ or $p - q$ for each specimen as shown on figure 9.

15.3.4.1 Connect the respective stress points for each specimen with a line or curve as shown on figure 9. This curve is a continuous representation of successive states of stress to which each specimen was subjected during testing and is called a "stress path."

15.3.5 Fit a straight line through the stress points corresponding to failure ($p_f' - q_f'$) on the $p - q$ diagram; use either a visual best fit or a mathematical fitting technique such as linear regression. This line is the K_f-line. Determine and draw the K_f-line (fig. 9).

NOTE 14.–The K_f-line can be determined by performing a linear regression analysis of stress points at failure.

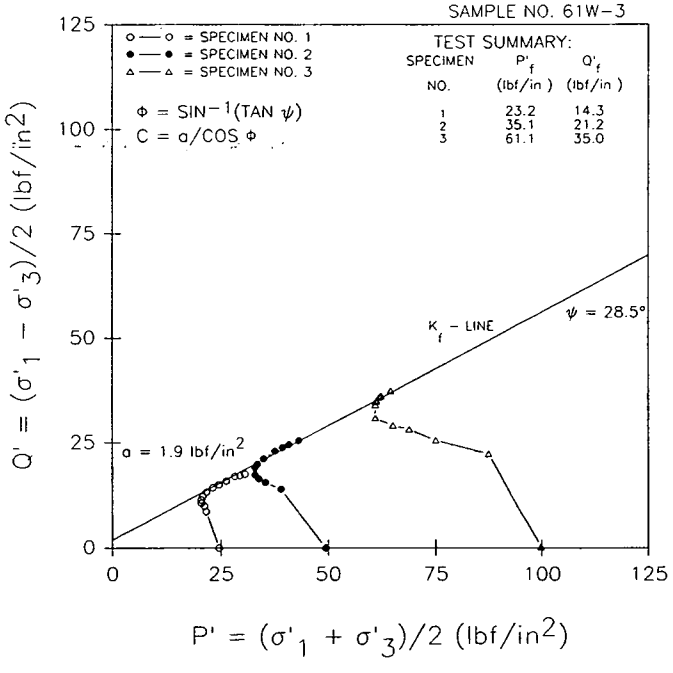

Figure 9. - $p' - q'$ diagram—example.

15.3.5.1 The equation of the K_f-line is of the linear form $y = mx + b$. It is defined for effective stress conditions as follows:

$$q_f' = a + p_f' (\tan \psi) \quad (19)$$

where:

q_f' = q' at failure, lbf/in²
p_f' = p' at failure, lbf/in²
a = intercept of the K_f-line on q'-axis, lbf/in²
$\tan \psi$ = slope of the K_f-line, dimensionless
ψ = the angle of the K_f-line with respect to horizontal, degrees

15.4 *Mohr-Coulomb Effective Stress Shear Strength Parameters.*–The equation for the Mohr-Coulomb failure envelope, figure 10, is similar to that of the K_f-line in that both are linear. There are relationships from which effective stress shear strength parameters may be calculated using the parameters obtained from the $p - q$ diagram.

15.4.1 *Effective angle of internal friction, ϕ'*, is the angle the Mohr-Coulomb failure envelope makes with the horizontal and may be calculated using the relationship between the K_f-line and the Mohr-Coulomb failure envelope.

$$\sin \phi' = \tan \psi \quad (20)$$

$$\phi' = \sin^{-1} (\tan \psi)$$

where ϕ' equals effective angle of internal friction, degrees.

15.4.1.1 Calculate the effective angle of internal friction, ϕ', using the equation in subparagraph 15.4.1 and the value for tan ψ from subparagraph 15.3.5.1.

15.4.2 *Effective cohesion, c'*, is the shear stress intercept of the Mohr-Coulomb failure envelope. Cohesion may be calculated using the relationship between the K_f-line and the Mohr-Coulomb failure envelope.

$$c' = \frac{a}{\cos \phi'} \quad (21)$$

where:

c' = effective cohesion, lbf/in²
a = intercept of the K_f-line on the q'-axis, lbf/in²

15.4.2.1 Calculate the effective cohesion, c', using the equation in subparagraph 15.4.2 and the values for a and ϕ' from subparagraphs 15.3.5.1 and 15.4.1.1.

15.5 *Effective Stresses on Failure Plane.*–The effective normal stress, σ', and the shear stress, τ, that develop on the failure plane during shear may be calculated at any reading for each of the specimens tested.

15.5.1 *Effective normal stress, σ'*, for each reading for each specimen using corresponding values of p', q', and ϕ' from data sheet 3 (fig. 5), subparagraphs 15.3.1, and 15.4.1, respectively, is calculated.

$$\sigma' = p' - q' \sin \phi' \quad (22)$$

where σ' equals effective normal stress, lbf/in²

15.5.1.1 Record values for σ' on figure 5 [data sheet 3 col. (31)].

15.5.2 *Shear stress, τ*, for each reading for each specimen using corresponding values of q' and ϕ' from figure 5 (data sheet 3) subparagraphs 15.3.3 and 15.4.1, respectively, is calculated.

$$\tau = q' \cos \phi' \quad (23)$$

where τ equals shear stress, lbf/in².

15.5.2.1 Record values for τ on figure 5 [data sheet 3 col. (32)].

15.6 *Mohr's Diagram.*–A Mohr's circle can be constructed for every state of stress to which a specimen is subjected. However, the state of stress most often represented is the condition at failure (subpar. 15.3.5.1). The circle at failure is defined by the principal stresses which caused failure and the resulting normal and shear stresses on the failure plane.

15.6.1 Plot the Mohr's circle at failure for each specimen as shown on figure 10.

15.6.1.1 The center of each Mohr's circle is located using the p' value from figure 5 [data sheet 3 col. (29)] corresponding to the selected failure point.

$$p_f' = \frac{(\sigma'_{1f} + \sigma'_{3f})}{2} \quad (24)$$

where:

p_f' = p' at failure, lbf/in²
σ'_{1f} = major effective principal stress at failure, lbf/in²
σ'_{3f} = minor effective principal stress at failure, lbf/in²

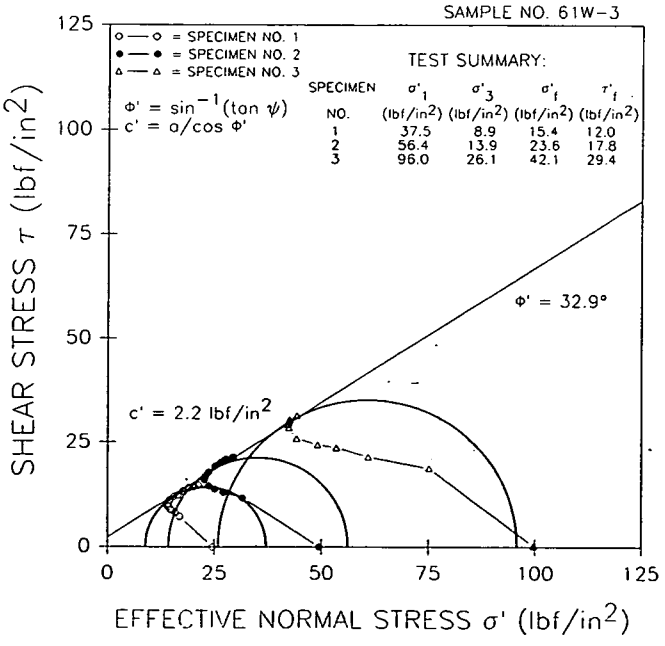

Figure 10. - Mohr's diagram—example.

15.6.1.2 The radius of the Mohr's circle is equal to q_f' for the selected failure point from figure 5 [data sheet 3 col. (30)].

$$q_f' = \frac{\sigma_{df}}{2} \quad (25)$$

where:
q_f' = q' at failure, lbf/in²
σ_{df} = deviator stress at failure, lbf/in²

15.6.2 Locate the center of each circle on the same plot of shear stress versus effective normal stress and draw each circle using the corresponding radius (fig. 10).

15.6.3 Locate, and include on the Mohr's diagram, the Mohr-Coulomb failure envelope defined by the effective stress shear strength parameters ϕ' and c' as determined in subparagraphs 15.4.1.1 and 15.4.2.1, respectively (fig. 10).

15.6.4 Plot the effective normal stress [col. (31)] and shear stress [col. (32)] for each reading from figure 5 (data sheet 3) for each specimen on the Mohr diagram. Connect the respective points for each specimen with a line or curve (fig. 10). This curve is called "vector curve."

15.7 *Top Excess Pore Pressure* [col. (33)].–The top excess pore pressure is:

$$\Delta u_{et} = u_{it} - u_{ptt} \quad (26)$$

where:
Δu_{et} = top excess pore pressure, lbf/in²
u_{it} = top pore pressure at a given point, lbf/in²
u_{ptt} = top pore pressure prior to touch, lbf/in²

15.8 *Bottom Excess Pore Pressure* [col. (34)].– The bottom excess pore pressure is:

$$\Delta u_{eb} = u_{ib} - u_{ptb} \quad (27)$$

where:
Δu_{eb} = bottom excess pore pressure, lbf/in²
u_{ib} = bottom pore pressure at a given point, lbf/in²
u_{ptb} = bottom pore pressure prior to touch, lbf/in²

15.9 *Pore Pressure Coefficient*, $\bar{A}$ [col. (35)].–The pore pressure coefficient, $\bar{A}$ for a saturated UU or CU test specimen is derived.

$$\bar{A} = \frac{\Delta u - \Delta\sigma_3}{\Delta\sigma_1 - \Delta\sigma_3} \quad (28)$$

where:
$\bar{A}$ = pore pressure coefficient, dimensionless
Δu = change in pore pressure, lbf/in²
$\Delta\sigma_3$ = change in lateral pressure, lbf/in²
$\Delta\sigma_1$ = change in major principal stress, lbf/in²

In an ordinary compression test $\Delta\sigma_3 = 0$ since the cell (confining or lateral) pressure is held constant throughout the test. The equation then takes the form:

$$\bar{A} = \frac{\Delta u}{\Delta\sigma_d} \quad (29)$$

where:
$\bar{A}$ = pore pressure coefficient, dimensionless
Δu = corresponding change in pore pressure (bottom pore pressure normally used), lbf/in²
$\Delta\sigma_d$ = change in deviator stress, lbf/in²

15.10 Plot percent axial strain [col. (21)] versus deviator stress [col. (26)] from figure 5 (data sheet 3) for each specimen tested as shown on figure 11.

15.11 Plot percent axial strain (col. 21, fig. 5) versus excess pore air and pore water pressures (cols. 33 and 34) from figure 5 (data sheet 3) for each specimen as shown on figure 12. Pore pressure readings from bottom porous insert (col. 6) correspond to pore air pressure.

15.12 Plot percent axial strain [col. (21)] versus volume strain [col. (22)] from figure 5 (data sheet 3) for each specimen tested as shown on figure 13.

15.13 Plot percent axial strain [col. (21)] versus effective stress ratio [col. (28)] from figure 5 (data sheet 3) for each specimen tested as shown on figure 14.

15.14 For saturated specimens, plot percent axial strain [col. (21)] versus pore pressure coefficient [col. (35)] from figure 5 (data sheet 3) for each specimen tested as shown on figure 15.

16. Report

16.1 The report is to consist of the following completed and checked forms:
"Specimen Placement—Data Sheet 1" (fig. 3).
"Triaxial Shear Test—Data Sheet 2" (fig. 4).
"Triaxial Shear Test—Data Sheet 3" (fig. 5).

16.2 Data plots are required as follows:
"p' - q' Diagram" (fig. 9).
"Mohr's Diagram" (fig. 10).
"Percent Axial Strain versus Deviator Stress" (fig. 11).
"Percent Axial Strain versus Excess Pore Pressure" (fig. 12).
"Percent Axial Strain versus Volume Strain" (fig. 13).
"Percent Axial Strain versus Effective Stress Ratio" (fig. 14).
"Percent Axial Strain versus Pore Pressure Coefficient" (fig. 15).

16.3 All calculations are to show a checkmark and all plotting must be checked.

17. Background Reference

Engineering and Design Laboratory Soil Testing, EM 1110-2-1906, Department of the Army, Office of the Chief Engineers, Washington, D.C., 20314, November 1970.

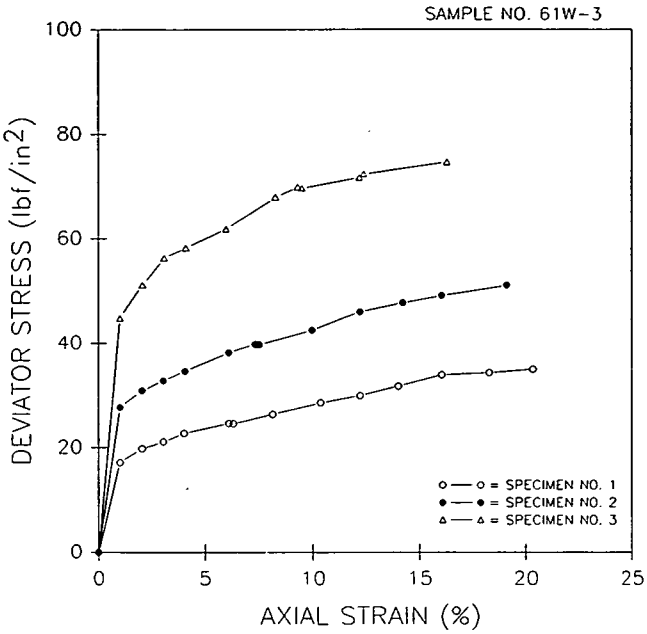

Figure 11. - Percent axial strain versus deviator stress—example.

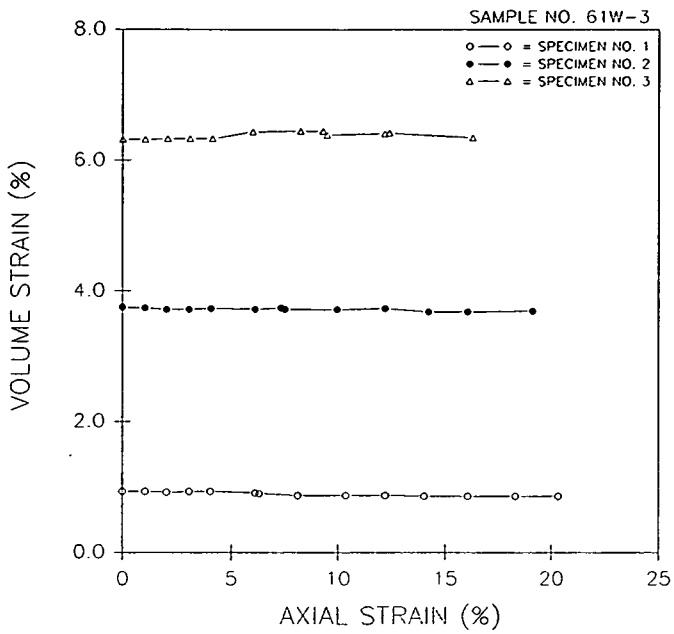

Figure 13. - Percent axial strain versus volume strain—example.

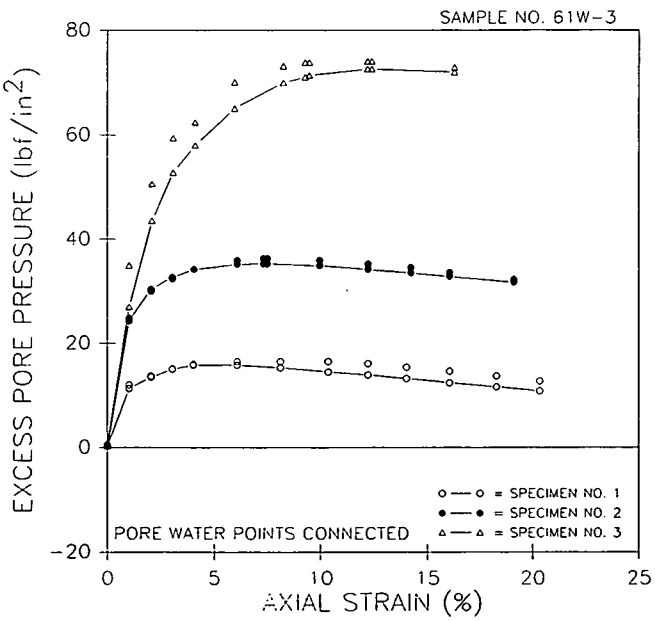

Figure 12. - Percent axial strain versus excess pore pressure—example.

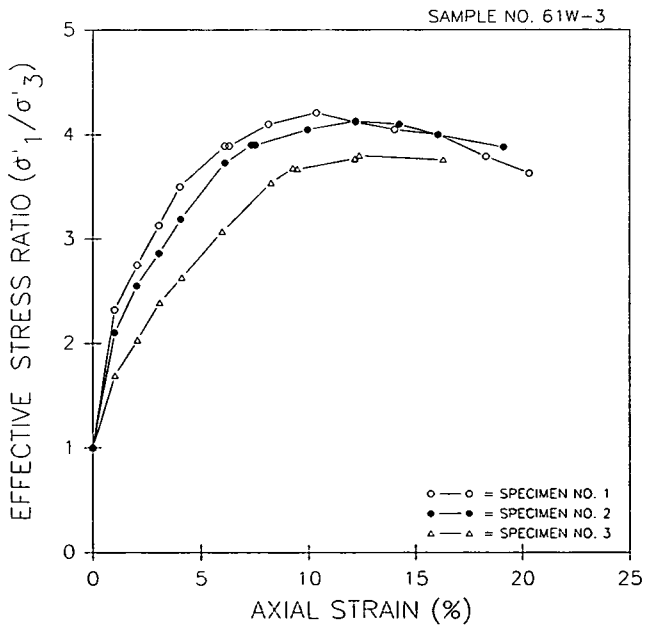

Figure 14. - Percent axial strain versus effective stress ratio—example.

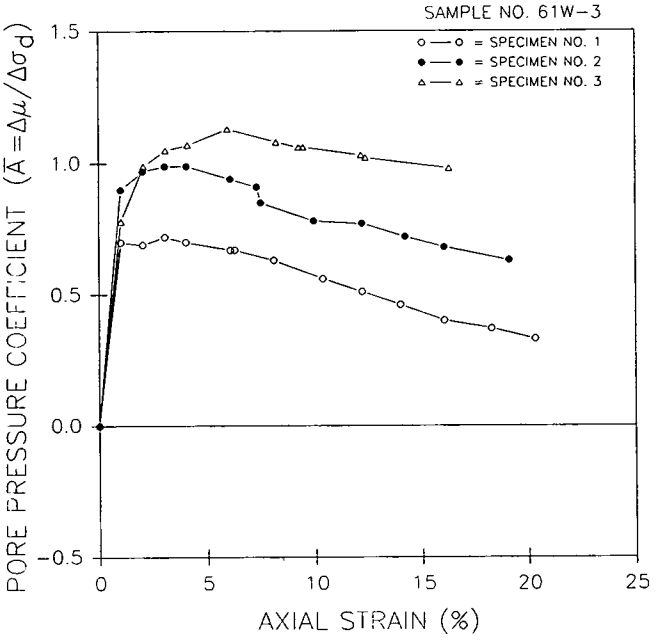

Figure 15. – Percent axial strain versus pore pressure coefficient—example.

APPENDIX

X1. DETERMINING THE TEMPERATURE CORRECTION COEFFICIENT FOR WATER-FILLED TRIAXIAL ASSEMBLY

X1.1 Scope

X1.1.1 When performing triaxial shear tests, there are occasions when changes in ambient temperature can occur. These ambient temperature changes can affect the volume of the water used for monitoring volume change of the specimen during testing. This appendix presents a method for determining a temperature correction coefficient for computing correct specimen volume.

X1.2 Summary of Method

X1.2.1 A triaxial assembly is de-aired and filled with de-aired water. A thermometer or thermocouple is inserted into the water in the chamber. The triaxial assembly is placed in a location where the ambient temperature can be varied from approximately 65 to 75 °F. The ambient temperature is allowed to drop slowly to the lower limit of the ambient temperature range over a period of 8 to 12 hours. Then, the assembly is relocated into an environment where the ambient temperature will cause the temperature of the triaxial assembly to increase approximately 10 to 15 °F over a period of 6 to 8 hours. The temperature of the water in the triaxial assembly is measured and recorded to the nearest 0.1 °F and the water level in the volume tube is read and recorded to 0.01 inch. The data are used to compute the temperature correction coefficient for the assembly in cubic inch per degree Farenheit (cubic centimeter per degree Celsius).

NOTE X1.1–When determining this coefficient, the top and bottom end plates are removed from the triaxial assembly since no specimen is placed in the chamber. Pipe plugs are screwed into the chamber bottom plate where the top and bottom end plate lines had been attached.

NOTE X1.2–It is recommended that three trials be performed on an assembly to determine an average temperature correction coefficient. Since the volume of water in an assembly is one of the independent variables in determining the coefficient, the volume of water in an assembly should not be changed during the trials and a temperature correction coefficient should be determined for each different size triaxial assembly.

X1.3 Preparation of Apparatus

X1.3.1 De-airing the triaxial assembly (fig. 1):

X1.3.1.1 Place the chamber into the groove in the bottom plate.

X1.3.1.2 Verify that all the valves in the system are closed.

X1.3.1.3 Fill the chamber about one-half full with de-aired water.

X1.3.1.4 Open triaxial chamber cap relief valve A.

X1.3.1.5 Set the chamber cap in place, and force the cap down onto the chamber until it is properly seated.

X1.3.1.6 Insert the piston through the ball bushing until the piston flange is resting on top of the chamber cap.

X1.3.1.7 Open valve B to the top of the volume tube.

X1.3.1.8 Attach vacuum hoses to valve B on top of the volume tube and to the fitting on the chamber cap relief valve A.

X1.3.1.9 Attach the other ends of the vacuum hoses to a multiport manifold on the vacuum pump. Turn on the vacuum pump.

X1.3.1.10 Apply a vacuum of about 20 lbf/in² (140 kPa) for 5 minutes.

X1.3.1.11 Release the vacuum from the chamber (at valve A) by uncoupling the vacuum line at the vacuum pump. Maintain the vacuum on the volume tube.

X1.3.1.12 Open volume tube drain valve E and volume tube isolation valve R, and fill the volume tube to the top of its marking with de-aired water from the chamber (vacuum is still on the volume tube).

X1.3.1.13 Close volume tube drain valve E.

X1.3.1.14 Release the vacuum from the volume tube by uncoupling the appropriate vacuum line at the vacuum pump.

X1.3.1.15 Plug the vacuum hose that attaches to the chamber at relief valve A into the vacuum source.

X1.3.1.16 Open valve E and allow the water level in the volume tube to drop to about the 25-inch (635-mm) level.

X1.3.1.17 Close volume tube drain valve E.

X1.3.1.18 Reattach the vacuum hose to the top of the volume tube. Uncouple the vacuum hose to valve A.

X1.3.1.19 Displace water back and forth between the volume tube and the chamber by repeating subparagraphs X1.3.1.12 through X1.3.1.18 until air bubbles can not be seen in the volume tube.

X1.3.1.20 If the volume tube is not full at the end of the flushing phase, fill the tube by opening valve E. Fill the volume tube to about the 5-inch level with de-aired water, so that it can be drained to the desired level for the coefficient determination. Close valves A and E.

X1.3.1.21 Uncouple all the vacuum lines from the manifold on the vacuum pump and shut off the vacuum pump.

X1.3.1.22 Uncouple the vacuum line from valves A and B. Coil the vacuum lines up and store them in a suitable location for future use.

X1.3.1.23 Do not drain the water from the chamber at this time.

X1.3.2 De-airing the differential pressure transducer.

X1.3.2.1 Fill the flushing tank on the differential pressure transducer about two-thirds full with de-aired water. Close the volume tube isolation valve R to isolate the volume tube and differential pressure transducer from the chamber.

X1.3.2.2 Open valve L on the differential pressure transducer. Remove the bottom plate on the differential pressure transducer by unscrewing the four cap head screws which hold the bottom plate to the body of the transducer. Fill the bottom plate with de-aired water. Open valve M and fill the bottom plate with de-aired water from the flushing tank. Open valves E and K to the volume tube and allow water to flood over the exposed capsule located under the main body of the differential transducer. With water flowing, place the bottom plate back on the differential pressure transducer, being careful not to entrap air. Close valve K but leave valve M to the flushing tank slightly open to relieve any pressure which results from tightening the cap screws. Tighten the four cap head screws.

X1.3.2.3 Flush the differential pressure transducer thoroughly by attaching a hand-held vacuum/pressure pump to the top of the flushing tank. Open valves K and M and flush water back and forth several times from the flushing tank to the volume tube through the differential transducer. When this step is complete be sure that the water level in the volume tube is near the full mark and close valve M. Open the volume tube isolation valve R.

NOTE X1.3–Extreme caution must be used when flushing the differential pressure transducer system since a pressure greater than about 10 lbf/in² (70 kPa) can damage the measuring capsule inside the transducer.

X1.4 Procedure

X1.4.1 All data are to be recorded on the "Temperature Correction Coefficient" form as shown on figure X1.1.

X1.4.2 Record all identifying information pertaining to the triaxial assembly on the form.

X1.4.3 Connect a hose to valve N; place the other end of the hose in an empty container or into a drain.

X1.4.4 Drain about one quarter to one-third of the water from the chamber by opening valve N. Close valves A and N.

X1.4.5 Remove the piston and the chamber cap from the chamber.

X1.4.6 Verify that volume tube valve B is open.

X1.4.7 Verify that all remaining valves to the chamber are closed.

X1.4.8 Attach a hose from the de-aired water source to the de-aired water source line. Open valve N and begin filling the chamber through the chamber bottom plate with de-aired water. As water rises in the chamber, use a squeeze bulb to flush any air bubbles that may be present on the bottom and sides of the chamber.

X1.4.9 Fill the chamber completely with de-aired water. Close valve N.

X1.4.10 Remove relief valve A by unscrewing it from the chamber cap.

X1.4.11 Set the chamber cap in place. Force the chamber cap down onto the chamber until it is properly seated.

X1.4.12 Open valve N and continue filling the chamber with de-aired water until water flows out of the hole left by removal of relief valve A. Close valve N.

X1.4.13 Insert a thermocouple or thermometer to about midheight in the chamber through the hole left by removal of valve A.

X1.4.14 Using modeling clay or silicon sealant, seal the opening between the thermocouple or thermometer and the hole in the cap.

X1.4.15 Open valve N and continue filling the chamber until water flows out the top of the ball bushing. Close valve N. Disconnect the de-aired water source line from valve N. Reattach the drain line to valve N.

X1.4.16 Screw the chamber bolts into the chamber bottom plate; set the chamber cap hold down plate into place.

X1.4.17 Secure the chamber cap to the chamber bottom plate by screwing the four nuts onto the four chamber bolts; tighten the nuts in a staggered sequence to about 50 ft-lbf torque.

X1.4.18 Tape a 0.5-inch diameter by 3-inch-long wooden dowel to the side of the piston nearest the piston retainer bar. Since there is not a specimen inside the chamber, the dowel keeps piston intrusion at about the same level it would be when a specimen is in the chamber.

X1.4.19 Lightly grease the piston. Open valve E. Carefully push the piston through the ball bushing in the chamber cap until the wooden dowel comes in contact with the top of the chamber cap. If the water displaced by the piston overtops the volume tube, drain the excess water by opening valve N. Close valve N.

X1.4.20 Open valves L and K to the differential pressure transducer.

X1.4.21 Attach and secure the piston retainer.

X1.4.22 Open volume tube drain valve E. Slowly open valve N to allow water to drain from the volume tube. When the level of water in the volume tube has reached the desired level for starting the test—usually the 10-inch level—close valve N.

X1.4.23 Place the triaxial assembly in an environment where an ambient temperature of 60 to 65 °F (16 to 18 °C) can be maintained for 8 to 12 hours.

X1.4.24 When the temperature of the triaxial assembly has stabilized, read and record chamber water temperature and volume tube height. Move the triaxial assembly to an environment where the ambient temperature will cause a water temperature rise of 10 to 15 °F over a period of 6 to 8 hours.

X1.4.25 Read and record water temperature to the nearest 0.1 °F and volume tube height to the nearest 0.01 inch. These readings should be taken at about 1-hour intervals until chamber water temperature stabilizes.

X1.4.26 This constitutes one trial. Repeat subparagraphs X1.4.23 through X1.4.25 if additional trials are required.

X1.4.27 Compute the temperature correction coefficient for each trial. Determine the average system temperature correction coefficient if required.

X1.5 Calculations

X1.5.1 Perform all calculations on the "Temperature Correction Coefficient" form as shown on figure X1.1.

7-2368 (10-86) Bureau of Reclamation	TEMPERATURE CORRECTION COEFFICIENT-DATA SHEET	Designation USBR ____-__
PROJECT Example	FEATURE Example	
TESTED BY / DATE	COMPUTED BY / DATE	CHECKED BY / DATE

Triaxial Assembly No. 29 (a) Volume tube factor, VT_f 0.110 ☒ in^3/in ☐ cm^3/cm

*Subscript 1 denotes initial reading
Subscript i denotes any subsequent reading

	DATE	TIME	Volume tube reading	Volume tube change $(3_1)-(3_i)$*	Converted Volume tube change (4)x(a)	Temperature	Temperature change
			in ☒ cm ☐	in ☒ cm ☐	in^3☒ cm^3☐	F°☒ C°☐	F°☒ C°☐
	(1)	(2)	(3)	(4)	(5)	(6)	(7)
1	9/16	6:34	10.00	—	0.00	66.2	0.0
2		7:30	9.84	0.16	0.018	67.8	1.6
3		8:50	9.51	0.49	0.054	70.7	4.5
4		9:30	9.45	0.55	0.061	71.6	5.4
5		10:30	9.23	0.77	0.085	73.2	7.0
6		11:38	9.09	0.91	0.100	75.0	8.8
7		12:35	9.05	0.95	0.105	75.7	9.5
8		13:30	8.91	1.09	0.120	76.6	10.4
9							
10							
11							
12							
13							
14							
15							
16							
17							
18							
19							
20							

REMARKS: System designed for 2x5 inch specimens. No endplates or specimen in chamber during this test. One trial only.

GPO 852 - 186

Figure X1.1. – Temperature correction coefficient—data sheet—example.

X1.5.2 *Volume Tube Factor, VT_f.*–Enter the volume tube factor in the space provided on figure X1.1.

X1.5.3 *Data Record.*–As readings are observed, record the following data: date (col. 1), time (col. 2), volume tube reading (col. 3), and temperature (col. 6).

X1.5.4 *Volume Tube Change* (col. 4).– The change in fluid level (col. 4) in the volume tube is calculated.

$$\Delta VT = VT_1 - VT_i \quad \text{(X1-1)}$$

where:

ΔVT = volume tube change, in
VT_1 = initial volume tube reading, in
VT_i = subsequent volume tube reading, in

X1.5.5 The volume tube readings are converted (col. 5) from linear to volumetric readings.

$$\Delta VT_n = \Delta VT\ (VT_f) \quad \text{(X1-2)}$$

where:

ΔVT_n = converted volume tube change, in^3
ΔVT = volume tube change, in
VT_f = volume tube factor, in^3/in

X1.5.6 The change in chamber water temperature (col. 7)is computed.

$$\Delta T = T_1 - T_i \quad \text{(X1-3)}$$

where:

ΔT = temperature change, °F
T_1 = initial stabilized water temperature reading, °F
T_i = subsequent temperature water reading, °F

X1.5.7 The temperature correction coefficient is a constant which relates chamber water temperature change to system volume change and may be expressed as:

$$T_f = \frac{\Delta VT_n}{\Delta T} \quad \text{(X1-4)}$$

where T_f equals temperature correction coefficient, $in^3/°F$. The temperature correction coefficient is the slope of the straight line relating ΔVT_n to ΔT and is assumed to pass through the origin. The line may be established from a visual best-fit straight line through the data points as shown on figure X1.2 or it may be determined using linear regression analyses. If three trials are performed, an average coefficient for the triaxial shear test system should be determined using all data collected for the individual trials.

NOTE X1.4.–The temperature correction coefficient is usually expressed in terms of cubic inch per degree Fahrenheit. However, it may be expressed in terms of cubic inch per degree Celcius, cubic centimeter per degree Fahrenheit, or cubic centimeter per degree Celcius.

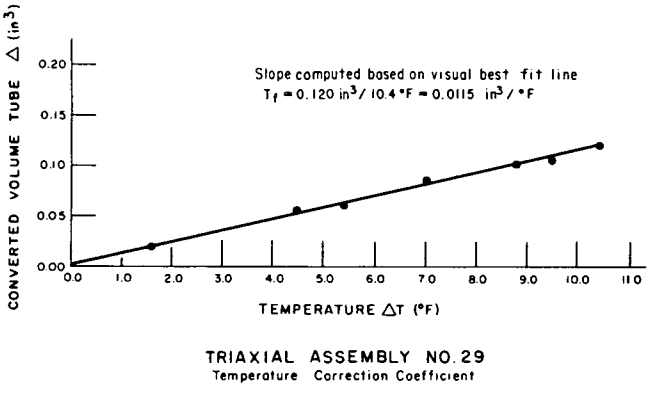

Figure X1.2. - Temperature correction coefficient plot—example.

X2. MEMBRANE CORRECTION

X2.1 Correction for Effect of Specimen Membrane

X2.1.1 The following equation, from ASTM D 1850, may be used to correct compressive soil strength for the effect of the specimen membrane if the error in deviator stress due to strength of the membrane exceeds 5 percent.

$$\Delta(\sigma_1 - \sigma_3) = \frac{4M\epsilon\ (1 - \epsilon)}{D_o} \quad \text{(X2-1)}$$

where:

$\Delta(\sigma_1 - \sigma_3)$ = the correction to be subtracted from the measured compressive strength, lbf/in^2
D_o = initial diameter of specimen, in
M = compression modulus of the membrane, lbf/in
ϵ = specimen axial strain, expressed as a decimal

X2.2 Compression Modulus of the Membrane, *M*

X2.2.1 The compression modulus of the membrane may be determined by hanging a 0.5-inch length of membrane over a thin rod, placing another rod along the bottom of the hanging membrane and measuring the force per unit strain by stretching the membrane. In tests of very soft soils, the membrane effect may be significant; however, for most soils the membrane correction is insignificant and can be ignored.

UNITED STATES DEPARTMENT OF THE INTERIOR
BUREAU OF RECLAMATION

USBR 5755-89

PROCEDURE FOR

PERFORMING CONSOLIDATED-DRAINED TRIAXIAL SHEAR TESTING OF SOILS

INTRODUCTION

This procedure is under the jurisdiction of the Geotechnical Services Branch, Code D-3760, Research and Laboratory Services Division, Denver Office, Denver, Colorado. The procedure is issued under the fixed designation USBR 5755. The number immediately following the designation indicates the year of acceptance or the year of last revision.

1. Scope

1.1 This designation outlines the procedure for determining the shear strength of consolidated-drained cylindrical soil specimens in either the undisturbed or compacted state using the triaxial shear test method. Specimens may be saturated using a back-pressuring technique prior to application of compressive stresses.

1.2 The CD (consolidated-drained) test is performed using either strain or stress controlled axial loading. The rate of strain or rate of stress application is dependent on the type of soil being tested.

1.3 Lateral pressure (confining pressure or cell pressure) is applied manually at a rate compatible with the type of soil being tested.

1.4 CD tests have been performed successfully on many types of soil, ranging from fine-grained to coarse grained soil, containing up to 3-inches (76 mm) maximum particle size. Specimen sizes for various types of soil have ranged from 1-3/8 inches diameter by 3 inches high to 9 inches diameter by 22-1/2 inches high (35- by 75- to 230- by 570-mm).

1.5 The test provides data for determining shear strength properties and stress-strain relations for soils.

1.6 Multiple specimens may be tested under single stage compressive loading or a single specimen may be tested under multistage compressive loading.

2. Auxiliary Tests

2.1 A compacted or undisturbed soil specimen must be prepared in accordance with USBR 5210 or 5215 prior to performing this procedure. A moisture content and unit weight determination must be obtained in accordance with USBR 5300 and 5370, respectively, to obtain the placement conditions for the test specimen. Physical properties tests are to be performed in accordance with USBR 5320, 5330, 5350, 5360, and 5365 after completion of the test.

3. Applicable Documents

3.1 *USBR Procedures*:

USBR 1008 Calibrating Linear Variable Differential Transformers
USBR 1012 Calibrating Balances or Scales
USBR 1040 Calibrating Pressure Gauges
USBR 1045 Calibrating Force Transducer (Load Cells)
USBR 1050 Calibrating Pressure Transducers
USBR 1055 Calibrating Differential Pressure Transducers
USBR 1450 Calibrating Triaxial-Type Chambers for Pressure-Volume Change Relations
USBR 1455 Calibrating Volume and Drain Tubes
USBR 3900 Standard Definitions of Terms and Symbols Relating to Soil Mechanics
USBR 5210 Preparing Compacted Soil Specimens for Laboratory Use
USBR 5215 Preparing Soil Specimens for Laboratory Use From Undisturbed Samples
USBR 5300 Determining Moisture Content of Soil and Rock by the Oven Method
USBR 5320 Determining Specific Gravity of Soils
USBR 5330 Performing Gradation Analysis of Fines and Sand Size Fraction of Soils, Including Hydrometer Analysis
USBR 5350 Determining the Liquid Limit of Soils by the One-Point Method
USBR 5360 Determining the Plastic Limit and Plasticity Index of Soils
USBR 5365 Determining Shrinkage Limit and Shrinkage Ratio of Soils
USBR 5370 Determining Unit Weight of Cylindrical Soil Specimens
USBR 5750 Performing Consolidated-Undrained Triaxial Shear Testing of Soils
USBR 7000 Performing Disturbed Soil Sampling in Test Pits, Trenches, Accessible Borings, and Tunnels
USBR 7010 Performing Disturbed Soil Sampling Using Auger Boring Method
USBR 7100 Obtaining Undisturbed Block Samples by the Hand and Chain Saw Methods
USBR 7105 Performing Undisturbed Soil Sampling by Mechanical Drilling Methods

4. Summary of Method

4.1 A soil specimen is prepared and placed in a standard triaxial assembly as shown on figure 1 and the chamber is sealed. The specimen may be saturated using a back-pressure technique and is then isotropically consolidated

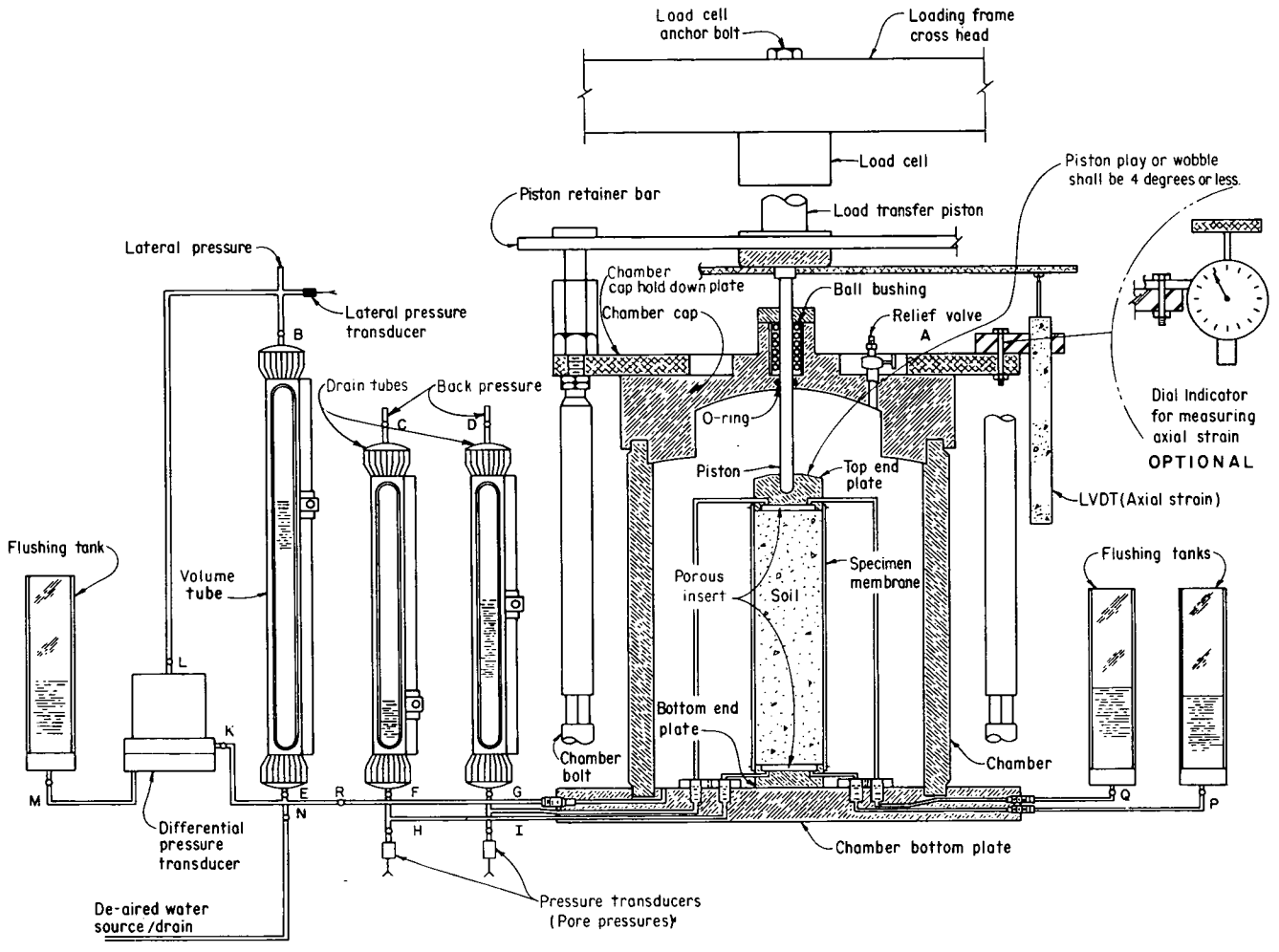

Figure 1. – Triaxial assembly for consolidated-drained tests.

under a predetermined effective consolidation pressure until primary consolidation is complete. The drains are left open and axial compressive stress is applied using either a strain or stress controlled loading device. As axial load is applied, deviator load, axial specimen deformation, specimen volume, and chamber water temperature are measured and recorded. The moisture content of the test specimen is permitted to change during axial load application. Shear stress, major and minor principal stresses at failure, and axial strain at failure are obtained. Stress-strain curves are plotted and an effective stress shear strength envelope is prepared. For single stage compressive loading of multiple specimens, at least three specimens are required for one complete CD triaxial shear test. For multistage compressive loading, only one specimen is required for one complete CD triaxial shear test.

5. Significance and Use

5.1 Shear strength of soil in triaxial compression depends on stresses applied, consolidation conditions, strain rate or stress application rate, and the stress history experienced by the soil.

5.2 Shear strength measured (in this test) is determined under drained conditions. The test is applicable to field conditions where consolidated soils are subjected to stress changes under drained conditions and magnitudes similar to those applied during the test.

5.3 Shear strength is expressed in terms of effective stress because a strain rate or load application rate slow enough to allow pore pressure equalization during shear is used to maintain zero excess pore pressure conditions. The results may be applied to field conditions where drainage can take place during stress changes and excess pore pressures can be assumed to be zero.

6. Terminology

6.1 Definitions are in accordance with USBR 3900. Terms of particular significance are:

6.1.1 *Consolidation.*–The time dependent reduction in volume of a soil mass resulting from an increase in effective stress.

6.1.2 *Deviator Stress* ($\sigma_1-\sigma_3$).–The difference between the major and minor principal stresses in a triaxial test (ASTM definition).

6.1.3 *Effective Stress* (σ').–The average normal force per unit area transmitted from grain to grain of a soil mass (similar to ASTM).

6.1.4 *Mohr Circle*.–A graphical representation of the stresses acting on the various planes at a given point (ASTM).

6.1.5 *Neutral Stress/Pore Pressure/Pore Water Pressure* (μ). Stress transmitted through the pore water (water filling the voids of the soil) (ASTM).

6.1.6 *Strength*.–The maximum stress which a material can resist without failing for any given type of loading (International Society for Rock Mechanics).

6.1.7 *Triaxial Shear Test*.–A test in which a specimen of soil or rock encased by an impervious membrane is subjected to a confining pressure and then loaded axially to failure (ASTM).

6.2 Terms not included in USBR 3900 specific to this designation are:

6.2.1 *Back-Pressure*.–A pressure applied to the specimen pore water that causes gas in the pore space to go into solution in the pore water; i.e., to saturate the specimen.

6.2.2 *Bubbling Pressure*.–Pressure required to force air through a saturated porous insert (also referred to as the air-entry value).

6.2.3 *Effective Consolidation Pressure*.–The effective lateral pressure (the difference between cell pressure and back pressure) applied to the specimen during consolidation.

6.2.4 *Failure*.–The stress condition at failure for a test specimen is taken to correspond to the maximum deviator stress attained, or the deviator stress (principal stress difference) at 20 percent axial strain, whichever is obtained first during performance of a test.

7. Apparatus

7.1 *General Apparatus*:

7.1.1 *Balance or Scale*.–Balance or scale meeting the requirements shown in table 1.

Table 1.–Balance or scale requirements.

Test specimen size				Balance or scale	
Diameter in	Height in	Diameter mm	Height mm	Capacity	Readability
2.0	5.0	50.8	127.0	1000 g	0.05 g
2.8	7.0	71.1	177.8	2000 g	0.1 g
6.0	15.0	152.4	381.0	25 kg	0.01 kg
9.0	22.5	228.6	571.5	75 kg	0.01 kg

7.1.2 *Timer*.–A timing device indicating elapsed time to the nearest 1 second to be is used for establishing the rate of stress or strain application.

7.1.3 *Specimen Size Measurement Devices*.–Devices used to measure the height and diameter of the specimen. The devices must be capable of measuring to the nearest 0.001 inch (0.025 mm) and should be constructed such that their use will not disturb the specimen. A vernier caliper is recommended for measuring specimen height and a pi tape for measuring specimen diameter.

NOTE 1.–For specimens having a height that exceed 12 inches (305 mm), use a rule graduated in millimeters to measure the height of the specimen to the nearest 1.0 mm (1/32 in).

7.1.4 *Water Container*.–Sufficient size to accommodate the test specimen.

7.1.5 *Suspension Wire and Specimen Carriage*.–For determining the specimen mass in air and water.

7.2 *Equipment Unique to This Procedure*:

7.2.1 *Axial Loading Device* (compression test machine).–A loading device (fig. 2) having sufficient capacity and control to provide the desired magnitude and rate of loading, respectively.

7.2.2 *Chamber Pressure Maintaining and Measurement Devices*.–Devices must be capable of applying and controlling the chamber pressure to within ±0.5 lbf/in² (±3.5 kPa). The devices may consist of a reservoir connected to the chamber and partially filled with the chamber fluid (usually water), with the upper part of the reservoir connected to a pressurized gas supply. The gas pressure is controlled by a pressure regulator and measured by a pressure gauge, electronic pressure transducer, or any other device capable of measuring to the prescribed tolerance. However, a hydraulic system pressurized by deadweight acting on a piston or any other pressure maintaining and

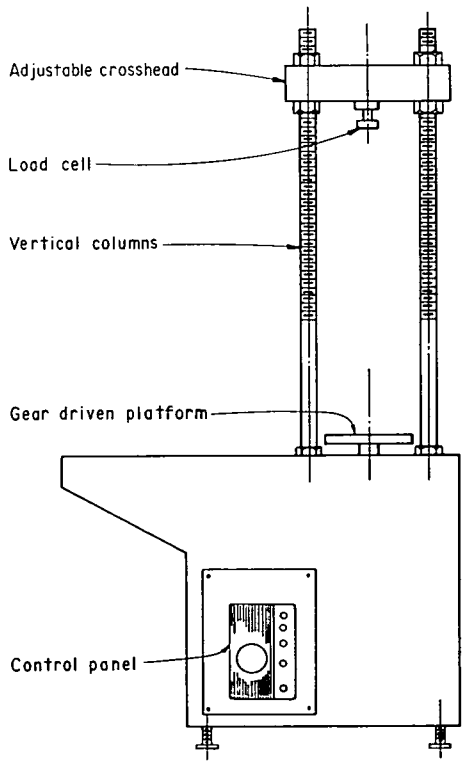

Figure 2. – Compression test machine.

measurement device capable of applying and controlling the chamber pressure to the tolerance prescribed in this subparagraph may be used.

7.2.3 *Triaxial Assembly.*–A chamber (fig. 1) in which a cylindrical specimen, enclosed by a membrane sealed to end plates, is placed and subjected to axial load while confined by lateral (σ_3) pressure. The triaxial chamber consists of a chamber bottom plate, chamber, and chamber cap. The chamber cap includes a ball bushing and piston, aligned with the axis of the specimen, through which the load from the axial loading device can be transmitted to the specimen to cause the specimen to be compressed axially between the end plates. The ball bushing and piston must be designed to minimize friction.

7.2.3.1 *Specimen End Plates.*–The end plates must be constructed of a noncorrosive impermeable material such as aluminum, stainless steel, or titanium; each must have a circular cross section and circular plane surface of contact with the specimen. The mass of the top end plate must be less than 0.5 percent of the applied axial load at failure. The diameter of the end plates should be within ±0.020 inch of the diameter of the specimen. The bottom end plate must be coupled to the chamber bottom plate to prevent lateral motion or tilting. The top end plate must be designed to receive the piston such that the piston-to-end plate contact area is concentric with the cap. It is recommended that the top end plate should be constructed in a manner so that piston play or "wobble" be restricted to 4 degrees or less perpendicular to the top end plate. Each end plate must be plumbed so air can be flushed from the end plate. The cylindrical surface of the end plates to which the membrane is sealed should be smooth and free of scratches. The end plates must be constructed so drainage can occur from both ends of the specimen. Each end plate shall be fitted with a porous insert.

7.2.3.2 *Porous End Plate Inserts.*–Porous inserts are manufactured from silicon carbide, aluminum oxide, sintered bronze, or ceramic. The material must not be susceptible to corrosion by soil substances or moisture. The proper grade (coarseness) of insert depends upon the type of test being performed and the soil being tested. The insert should be coarse enough to develop adequate interlock with the specimen, but fine enough to prevent excessive intrusion of soil into the pores of the insert. Exact criteria for this have not been established. The coarseness of insert material determines two properties vital to pore pressure measurements: (1) permeability, the rate of diffusion of a pressurized gas through a porous material; and (2) bubbling pressure the air entry value; i.e., the pressure required to force air through a saturated porous insert.

7.2.3.3 *Axial Load-Measuring Device.*–The load measuring device shall be capable of measuring the axial load to an accuracy of ±0.25 percent over its full range.

7.2.3.4 *Pore Pressure Transducers.*–Pore pressure transducers are used to measure pore pressure in the soil specimen. The pressure transducers shall have an accuracy of ±0.25 percent over their full range.

7.2.3.5 *Lateral Pressure Transducer.*–The lateral pressure transducer is used to measure the lateral pressure applied inside the chamber. The transducer shall have an accuracy of ±0.25 percent over its full range.

7.2.3.6 *Differential Pressure Transducer.*–The differential pressure transducer is used to measure volume change of the specimen during the test. The transducer and volume tube are plumbed so that the height of the water column in the volume tube reacts directly on the measuring diaphragm inside the transducer. The transducer shall have an accuracy of ±0.25 percent of its full range.

7.2.3.7 *Volume Tube.*–A constant bore glass tube supported by a sectional brass pipe with watertight seals on both ends. The volume tube is used primarily as a means of visually monitoring the volume change of the specimen. However, it serves also as a water reservoir and flushing tube when de-airing the system. For triaxial systems, in which visual readings of the volume tube are used in determining volume change of the specimen, the volume tube should be graduated in 0.01 divisions. For triaxial systems, in which a differential pressure transducer (as described in subpar. 7.2.3.6) is used in determining volume change of the specimen, it is recommended that the volume tube be graduated in 0.1 inch divisions so that a visual check of the specimen volume change can be made. The volume tube must be capable of withstanding pressures up to 250 lbf/in^2 (1724 kPa). The volume tube assembly must be enclosed in a 1/4-inch thick (6 mm) Plexiglas shield to prevent injury to personnel in the event the volume tube fails.

7.2.3.8 *Drain Tube.*–A constant bore glass tube supported by a sectional brass pipe with watertight seals on both ends. For CD (consolidated-drained) tests, the drain tubes are used as a water reservoir and flushing tube when de-airing the system, for back pressuring the specimen, and may be used to monitor the volume of fluid drainage during the test. The drain tube must be capable of withstanding pressures up to 250 lbf/in^2 (1724 kPa). The drain tube assembly must be enclosed in a 1/4-inch thick (6 mm) Plexiglas shield to prevent injury to personnel in the event the drain tube fails.

7.2.3.9 *Flushing Tank.*–Plexiglas tubes used for flushing air from the triaxial assembly. One tank is mounted on the differential pressure transducer and one each on the exit ports of the top and bottom end plates.

7.2.3.10 *Axial Deformation Indicator.*–A dial indicator or LVDT (linear variable differential transformer) having 0.001 inch (0.025 mm) resolution, and travel range of at least 20 percent of the initial height of the test specimen. Other measuring devices meeting these requirements for precision and range may be used.

7.2.3.11 *Specimen Membrane.*–A membrane used to encase the specimen to isolate it from chamber fluid. Membranes should be carefully inspected prior to use; if any flaws or pinholes are evident, the membrane should be replaced. To minimize restraint to the specimen, the unstretched membrane diameter should be between 75 and 90 percent of the specimen diameter. The membrane thickness must not exceed 1 percent of the diameter of

the specimen. The membrane must be sealed to the end plates with two rubber O-rings for which the unstressed inside diameter is 75 percent or less of the diameter of the end plate. Other methods that produce a positive seal may be used.

7.3 *Miscellaneous Apparatus*:

7.3.1 *Tools, Etc.*–Specimen trimming and carving tools, membrane expander, O-ring expander, moisture content cans, and data forms as required.

7.3.2 *Humidity Room.*–A soil storage and sample preparation room with controlled temperature and humidity. The humidity room at the Geotechnical Services Laboratory, Denver Office, is designed to maintain 70±5 percent relative humidity and a temperature of 70±5 °F (21±3 °C).

8. Reagents and Materials

8.1 Water used for performing the test is to be de-aired water at room temperature. The purity should be such that the water is free of acids, alkalies, or oils, and is suitable for drinking.

9. Precautions

9.1 *Safety Precautions*:

9.1.1 Safety shoes should be worn when de-airing the equipment or placing the specimen.

9.1.2 Water spillage in the area should be cleaned up as soon as possible.

9.1.3 Safety glasses should be worn when applying air pressure to the volume/drain tubes when saturating or consolidating the specimen.

9.1.4 Pressure should be slowly applied and released from the triaxial assembly to prevent the glass volume tubes from shattering.

9.2 *Technical Precautions*:

9.2.1 Care must be taken to completely de-air the triaxial assembly prior to performing the test.

9.2.2 The porous inserts in the end plates should be cleaned frequently to remove any impurities which may inhibit free waterflow.

9.2.3 When performing a CD-type test, the rate of strain should be sufficiently slow to allow complete drainage and equalization of pore pressure in the specimen.

10. Sampling, Test Specimen, and Test Units

10.1 *Sample Size*:

10.1.1 *Compacted Specimens*:

10.1.1.1 Samples to be used in triaxial shear testing of compacted specimens should be obtained in accordance with methods presented in USBR 7000 or 7010.

10.1.1.2 A sufficient mass of material should be obtained so that all required testing can be performed on the sample. Suggested minimum sample mass (based on minimum specimen size, maximum particle size, and a minimum of four specimens per test) should be in accordance with table 2.

Table 2. – Suggested minimum sample mass.

Test specimen size				Practical field sample mass	
Diameter in	Height in	Diameter mm	Height mm	lbm	kg
2.0	5.0	50.8	127.0	65	30
2.8	7.0	71.1	177.8	100	45
6.0	15.0	152.4	381.0	200	90
9.0	22.5	228.6	571.5	700	320

10.1.2 *Undisturbed Specimens.*–Samples to be used in triaxial shear testing of undisturbed specimens should be obtained in accordance with methods presented in USBR 7100 or 7105.

10.2 *Specimen Size*:

10.2.1 Test specimen size and maximum particle size should be in accordance with table 3.

Table 3. – Specimen and maximum particle size.

Test specimen size				Maximum particle size	
Diameter in	Height in	Diameter mm	Height mm	in	mm
2.0	5.0	50.8	127.0	No. 4	4.75
2.8	7.0	71.1	177.8	0.375	9.5
6.0	15.0	152.4	381.0	0.75	19.0
9.0	22.5	228.6	571.5	1.5	37.5

10.2.2 If, after completion of a test, it is found that oversize particles were present indicate this information in the report of test data under *Remarks*.

NOTE 2: For specimen sizes and maximum particle sizes not listed in table 3, maximum particle size should be smaller than one-sixth the specimen diameter.

10.2.3 Specimen height-to-diameter ratio must be between 2 and 3.

10.3 *Compacted Specimens.*–Prepare compacted test specimens in accordance with USBR 5210.

10.4 *Undisturbed Specimens.*–Prepare undisturbed test specimens in accordance with USBR 5215.

11. Preparation of Apparatus

11.1 *Saturation of Porous Inserts and De-airing of End Plates.*

11.1.1 If new porous inserts with a bubbling pressure greater than 5 lbf/in^2 (35 kPa) are to be used for the test, the end plate, connecting lines, and porous insert are to be completely submerged in de-aired water and boiled from 8 to 16 hours to ensure that all entrapped air has been removed.

11.1.2 If end plates with previously saturated porous inserts with a bubbling pressure greater than 5 lbf/in^2 are to be reused for the test, the end plates, connecting lines, and porous inserts are to be removed from the triaxial assembly, completely submerged in de-aired water, and boiled for a minimum of 4 hours to remove any entrapped air.

11.1.3 If new porous inserts with a bubbling pressure of 5 lbf/in² or less are to be used for the test, the end plates, connecting lines, and porous inserts are to be completely submerged in de-aired water and boiled for a minimum of 2 hours to ensure that all entrapped air has been removed.

11.1.4 If end plates with previously saturated porous inserts with a bubbling pressure of 5 lbf/in² or less are to be reused for the test, the end plates, connecting lines, and porous inserts can be left in the triaxial assembly for subsequent tests and de-aired using vacuum.

11.2 *De-Airing the Triaxial Assembly* (fig. 1):

11.2.1 Attach the saturated end plates with porous inserts to the chamber bottom plate.

11.2.1.1 Place the bottom end plate with centering dowel into the hole in the center of the chamber bottom plate.

11.2.1.2 To ensure that pressure does not build up in the system when the end plate connecting lines are attached to the fittings in the chamber bottom plate, open valves F and P or G and Q slightly to allow a small amount of water to flow from the appropriate drain tube and flushing tank through the fittings in the chamber bottom plate while the appropriate end plate connecting lines are being attached.

11.2.1.3 Open valves F and P. Attach the bottom end plate connecting lines to the appropriate fittings in the chamber bottom plate. Close valves F and P.

11.2.1.4 Open valves G and Q. Attach the top end plate connecting lines to the appropriate fittings in the chamber bottom plate. Close valves G and Q.

11.2.2 Place the chamber into the groove in the chamber bottom plate.

11.2.3 Check that all system valves are closed.

11.2.4 Fill the chamber about one-half full with de-aired water.

11.2.5 Open chamber cap relief valve A.

11.2.6 Set the chamber cap in place and force the cap down until it is properly seated on the chamber.

11.2.7 Insert the piston through the opening in the chamber cap until the flange on the piston is resting on top of the chamber cap.

11.2.8 Open the valves to the top of the volume and drain tubes (valves B, C, and D).

11.2.9 Attach vacuum hoses to the tops of the volume tube, drain tubes, and the fitting on chamber cap relief valve A.

11.2.10 Attach the other ends of the vacuum hoses into a suitable vacuum source, such as a vacuum pump. Turn on the vacuum pump.

11.2.11 Apply a vacuum of approximately 20 lbf/in² (140 kPa) for 5 minutes.

11.2.12 Release the vacuum to the chamber by uncoupling the vacuum line from the vacuum pump multiport manifold. Maintain the vacuum on the volume tube and drain tubes.

11.2.13 Open volume tube drain valve E and the volume tube isolation valve R, and fill the volume tube to the top of its marking with de-aired water from the chamber (vacuum is still on the volume tube).

11.2.14 Close volume tube drain valve E.

11.2.15 Open drain tube valves F and G and fill the drain tubes to the top of their markings with de-aired water from the chamber (vacuum is still on the drain tubes).

11.2.16 Close drain tube valves F and G.

11.2.17 Release the vacuum from the volume and drain tubes by uncoupling the appropriate vacuum lines from the vacuum pump.

11.2.18 Reattach the vacuum hose to chamber cap relief valve A to the vacuum source.

11.2.19 Open valve E and allow the water level in the volume tube to drop to about the 25-inch (635-mm) level.

11.2.20 Close volume tube drain valve E.

11.2.21 Open drain tube valves F and G, and allow the water level in the drain tubes to drop to about the 25-inch level.

11.2.22 Close drain tube valves F and G.

11.2.23 Reattach vacuum hoses to the tops of the volume tube and drain tubes.

11.2.24 Displace water back and forth between the volume and drain tubes and the chamber by repeating subparagraphs 11.2.12 through 11.2.24 until air bubbles cannot be seen in the tubes.

11.2.25 If the volume and drain tubes are not full at the end of the flushing process, fill the tubes by opening valves E, F, and G, with vacuum applied to the top of each tube. Fill the volume and drain tubes to the top of their tube markings with de-aired water so they can be drained to the desired level for testing purposes. Close valves A, E, F, and G.

11.2.26 De-air the flushing tanks and associated lines and fittings. A rubber stopper, with a short length of tubing through the hole in the center of the stopper, is inserted into the upper end of each flushing tank.

11.2.27 A vacuum hose is attached to each tube. Plug the vacuum hoses attached to the top of the flushing tanks into the vacuum source.

11.2.28 Open valve A. Slowly open valves P and Q and allow each flushing tank to fill within about 1 inch (25 mm) of the top.

11.2.29 Close flushing tank valves P and Q.

11.2.30 Release the vacuum from the flushing tanks by uncoupling the appropriate vacuum lines from the vacuum pump.

11.2.31 Plug the vacuum hose to chamber relief valve A into the vacuum source.

11.2.32 Open valves P and Q and allow the water level in the flushing tanks to drop so there is about 1 inch of water remaining in each flushing tank. Close valves P and Q.

11.2.33 Displace water back and forth between the flushing tanks and the chamber by repeating subparagraphs 11.2.27 through 11.2.33 until air bubbles cannot be seen in the flushing tank. Close valves A, P, and Q.

11.2.34 Uncouple all vacuum lines from the manifold on the vacuum pump and shut off the vacuum pump.

11.2.35 Uncouple all vacuum lines from the triaxial assembly, coil the vacuum lines, and store in a suitable location for future use.

11.2.36 Do not drain the water from the chamber until the end plates and specimen are ready to be placed in the chamber as outlined in paragraph 14.

11.3 *De-Airing the Pore Pressure Transducers*:

11.3.1 Check that valves H and I are closed, then detach the pore pressure transducers from their fittings on the apparatus. Using a syringe, fill each transducer with de-aired water.

11.3.2 Open valve A. Slowly open valve H to allow a small amount of water to escape from the chamber. With water flowing, attach the transducer for the bottom end plate to the appropriate fitting. Leave valve H open.

11.3.3 Slowly open valve I to allow a small amount of water to escape from the chamber. With water flowing, attach the transducer for the top end plate to the appropriate fitting. Leave valve I open. Close valve A.

11.4 *De-Airing the Differential Pressure Transducer*:

11.4.1 Fill the flushing tank on the differential pressure transducer about two-thirds full of de-aired water. Close the volume tube isolation valve R to isolate the volume tube and differential pressure transducer from the chamber.

11.4.2 Open valve L on the differential pressure transducer. Remove the bottom plate on the differential pressure transducer by unscrewing the four cap head screws which hold it to the body of the transducer. Open valve M and fill the bottom plate with de-aired water from the flushing tank. Open valves E and K to the volume tube and allow water to flood over the exposed capsule located under the main body of the differential pressure transducer. With water flowing, place the bottom plate back on the differential pressure transducer while being careful not to entrap air. Close valve K, but leave valve M to the flushing tank slightly open to relieve any pressure which results from tightening the cap screws. Tighten the four cap head screws.

11.4.3 Flush the differential pressure transducer thoroughly by attaching a hand-held vacuum/pressure pump to the top of the flushing tank. Open valves K and M and flush water back and forth several times between the flushing tank and the volume tube through the differential pressure transducer. When this step is complete, be sure the water level in the volume tube is near the full mark and close valve M. Open the volume tube isolation valve R.

NOTE 3.-Extreme caution must be used when flushing the differential pressure transducer, since a pressure greater than about 10 lbf/in(² (70 kPa) can damage the measuring capsule inside the transducer.

12. Calibration and Standardization

12.1 Verify that all component parts of the triaxial assembly are currently calibrated in accordance with the applicable calibration procedure. If the calibration is not current, perform the calibration before using the equipment for this procedure.

13. Conditioning

13.1 Prepare, place, saturate, and load the test specimen in an area isolated from drafts, vibrations, and variations in ambient temperature.

14. Procedure

14.1 All data are to be recorded on figure 3, "Specimen Placement—Data Sheet 1" (for triaxial shear tests) and on figure 4, "Triaxial Shear Test—Data Sheet 2." Perform calculations, as necessary, following step by step procedures outlined on figure 5, "Triaxial Shear Test—Data Sheet 3."

14.2 Record all identifying information pertaining to the sample, specimen, and triaxial assembly in designated blanks on data sheets 1 and 2.

14.3 Connect a hose to valve N; place the other end of the hose in an empty container or into a drain.

14.4 Open valves A and N and drain all water from the chamber. Close valve N.

14.5 Remove the piston, the chamber cap, and the chamber from the chamber bottom plate.

14.6 Verify that volume tube valve B, drain tube valves C and D, and volume tube isolation valve R are open.

14.7 Verify that all remaining valves to the chamber are closed.

14.8 Open drain tube valve F and lower the water in the drain tube to a level about 6 inches (150 mm) above the chamber bottom plate. The water will exit through the chamber bottom plate of the triaxial assembly and it will be necessary to absorb the water with a towel or other appropriate absorbent material.

14.9 Close valve F.

14.10 Open drain tube valve G and lower the water in the drain tube to a level about 2 inches (50 mm) above the chamber bottom plate. The water will exit through the bottom plate of the triaxial assembly and should be wiped up immediately.

14.11 Close valve G.

14.12 Attaching the saturated end plate with porous insert to the chamber bottom plate follows:

14.12.1 Place the bottom end plate with centering dowel into the centering hole in the center of the chamber bottom plate.

14.12.2 Open valve G slightly to allow a very small amount of water to flow from the drain tube through the fitting. With water flowing, attach the bottom end plate connecting tube to the chamber bottom plate.

14.12.3 Close valve G.

14.12.4 Open valve F slightly to allow a very small amount of water to flow from the drain tube through the fitting.

14.12.5 With water flowing, attach the top end plate connecting line to the chamber bottom plate.

14.12.6 Do not close valve F because this prevents cavitation of the system and keeps the top end plate porous insert moist.

7-2367 (10-86)
Bureau of Reclamation

SPECIMEN PLACEMENT-DATA SHEET 1
(FOR TRIAXIAL SHEAR TESTS)

Designation USBR 5755.89

SAMPLE NO.	PROJECT	FEATURE
61W-9	Example	Example

LOCATION	DEPTH/ELEV
DH-27	15.0 - 20.0 ft.

TESTED BY / DATE	COMPUTED BY / DATE	CHECKED BY / DATE

SPECIMEN TYPE: ☒ UNDISTURBED ☐ NATURAL MOISTURE ☐ COMPACTED ☐ WETTED

TEST TYPE: ☐ UU ☒ CD ☐ MULTISTAGE ☐ CU ☐ UK_o ☐ DK_o

SPECIMEN DIAMETER 2.000 (in) SPECIMEN LENGTH 5.000 (in)

PHYSICAL PROPERTIES

% GRAVEL 5 LIQUID LIMIT 46 (%) (USBR 5350)

% SAND 13 (USBR 5325) PLASTICITY INDEX 26 (%) (USBR 5360) CLASSIFICATION SYMBOL CL

% FINES 82 SPECIFIC GRAVITY 2.71 (USBR 5320)

		SPECIMEN 1	SPECIMEN 2	SPECIMEN 3
(1)	MASS OF WET SPECIMEN AND CONTAINER IN AIR (g)	714.2	716.5	728.2
(2)	MASS OF CONTAINER IN AIR (g)	151.0	151.1	158.3
(3)	MASS OF WET SPECIMEN (1) - (2) (g)	563.2	565.4	569.7
(4)	MASS OF DRY SPECIMEN (3)/[1 + (12)/100] (g)	494.5	496.4	499.7
(5)	MASS OF WET SPECIMEN AND CONTAINER IN WATER (g)	387.5	389.6	389.7
(6)	MASS LOSS OF WET SPECIMEN AND CONTAINER = (1) - (5) (g)	326.7	326.9	338.3
(7)	MASS OF CONTAINER IN WATER (g)	80.0	80.5	79.4
(8)	MASS LOSS OF CONTAINER = (2) - (7) (g)	71.0	70.6	78.9
(9)	MASS LOSS OF SPECIMEN = (6) - (8) (g)	255.7	256.3	259.4
(10)	SPECIMEN VOLUME = (9)/16.3498* (in^3)	15.639	15.676	15.866
(11)	DRY UNIT WEIGHT = [(4) x 3.8096*]/(10) (lbf/ft^3)	120.5	120.6	120.0
(12)	MOISTURE CONTENT (USBR 5300) (FROM BACK) (%)	13.9	13.9	14.0
(13)	SOIL VOLUME = (4)/(SpG x 16.3498*) (in^3)	11.161	11.203	11.278
(14)	PERCENT SOIL VOLUME = [(13)/(10)] x 100 (%)	71.4	71.5	71.1
(15)	WATER VOLUME = [(3) - (4)]/16.3498* (in^3)	4.202	4.220	4.281
(16)	PERCENT WATER VOLUME = [(15)/(10)] x 100 (%)	26.9	26.9	27.0
(17)	FREE AIR VOLUME = (10) - (13) - (15) (in^3)	0.276	0.253	0.307
(18)	PERCENT FREE AIR VOLUME = 100 - (14) - (16) (%)	1.7	1.6	1.9
(19)	VOID RATIO = [(10)-(13)]/(13)	0.401	0.399	0.407
(20)	DEGREE OF SATURATION = $\frac{(15)}{(10)-(13)}$ x 100 (%)	93.8	94.3	93.3

*CONSTANTS: 16.3498 g/in^3 = $(2.54)^3$ x 0.997724
$(cm/in)^3$ x abs. density of water in g/cc @ 72 F.
3.8096 = (1728 in^3/ft^3) / (453.5924 g/lbm), 1 cc = 1 g @ 4°C

Figure 3. - Specimen placement — data sheet 1 (for triaxial shear tests) — example.

SAMPLE NUMBER 61W-9

MOISTURE CONTENT DATA

	SPECIMEN 1	SPECIMEN 2	SPECIMEN 3	UNITS
CONTAINER NUMBER	63	41	76	
DATE PLACED IN OVEN	2/14	2/14	2/14	
(1) MASS OF CONTAINER + WET SPECIMEN	357.6	365.8	382.9	☒ g
(2) MASS OF CONTAINER + DRY SPECIMEN	339.0	346.3	362.0	
(3) MASS OF CONTAINER	205.2	206.0	212.7	☐ kg
(4) MASS OF WATER = (1) – (2)	18.6	19.5	20.9	
(5) MASS OF DRY SPECIMEN = (2) – (3)	133.8	140.3	149.3	☐ lbm
(6) MOISTURE CONTENT (%) = [(4)/(5)] X 100	13.9	13.9	14.0	
COMPUTED BY AND DATE				
CHECKED BY AND DATE				

COMPACTION DATA

(_____) x (1/(1 + _____)) = (_____) x (_____) = _____
dry unit wt. — 1 + moist. — wet den. — factor (USBR 5210)

_____ CONTAINER
_____ TOTAL

LAYER	MASS (g)	LENGTH (in)	LAYER	MASS (g)	LENGTH (in)
(1)			(6)		
(2)			(7)		
(3)			(8)		
(4)			(9)		
(5)			(10)		

COMPUTED BY _____ DATE _____ CHECKED BY _____ DATE _____

CONTAINER MASSES

	PARTS	MASS - SPECIMEN 1 (g) AIR	WATER	LOSS	PARTS	MASS - SPECIMEN 2 (g) AIR	WATER	LOSS	PARTS	MASS - SPECIMEN 3 (g) AIR	WATER	LOSS
CARRIAGE NO.	1	78.7	70.1	8.6	1	78.7	70.1	8.6	1	78.7	70.1	8.6
MEMBRAINE NO.	6MN	17.0	-0.6	17.6	7MN	16.5	-1.7	18.2	8MN	17.5	-1.7	19.2
END PLATES	6EP	51.7	9.8	41.9	7EP	52.3	11.4	40.9	8EP	58.5	10.3	48.2
2-'O'- RINGS		3.6	0.7	2.9		3.6	0.7	2.9		3.6	0.7	2.9
MISC.												
TOTAL		151.0	80.0	71.0		151.1	80.5	70.6		158.3	79.4	78.3

COMPUTED BY _____ DATE _____ CHECKED BY _____ DATE _____

Figure 3. - Specimen placement — data sheet 1 (for triaxial shear tests) — example — Continued.

14.13 Apply a small amount of silicon grease to the sides of the top and bottom end plates to aid in sealing the specimen membrane to the end plates.

14.14 Placing and sealing the soil specimen on the end plates follows:

14.14.1 Obtain a specimen prepared in accordance with either USBR 5210 or 5215. At this point, the specimen should be enclosed in a membrane with caps on both ends with the membrane is sealed to the caps with O-rings.

14.14.2 Remove the O-rings from both ends of the specimen.

14.14.3 Roll the membrane from the end cap on one end of the specimen and remove the end cap from that end of the specimen—either end may be used unless otherwise specified.

14.14.4 Place the test specimen on the bottom end plate. Roll the membrane down over the sides of the bottom end plate.

7-2371 (10-86)
Bureau of Reclamation

TRIAXIAL SHEAR TEST-DATA SHEET 2

Designation USBR 5755.89

SAMPLE NO.	SPECIMEN NO.	PROJECT	FEATURE
61W-9	1	Example	Example

TESTED BY	DATE	COMPUTED BY	DATE	CHECKED BY	DATE

Displacement rate 0.0001 ☒ in/min ☐ mm/min

Applied lateral pressure 97 ☒ lbf/in² ☐ kPa

Back pressure 68.2 ☒ lbf/in² ☐ kPa

Barometric pressure 12.0 ☒ lbf/in² ☐ kPa

Pore-Pressure Coefficient(B) (saturation parameter) 0.98

Volume Change of System — USBR 1450

Max. Lat. 1 10.0 Slope 1 0.008 Intercept 1 0.000

Max. Lat. 2 30.0 Slope 2 0.004 Intercept 2 0.080

Max. Lat. 3 75.0 Slope 3 0.002 Intercept 3 0.160

Slope 4 0.001 Intercept 4 0.250

Chamber No. 33 Compression test machine No. 2

(a) Load piston area, A_p 0.1964 ☒ in² ☐ cm²

(b) Volume tube factor, VT_f 0.120 ☒ in³/in ☐ cm³/cm

(c) Drain tube factor, DT_f 0.0121 ☒ in³/in ☐ cm³/cm

(d) Temp. corr. coefficent, T_f 0.0115 ☒ in³/°F ☐ cm³/°C

	Applied Lateral press.		Deviator Load		Axial Specimen Deformation		Volume Tube Reading		Pore Pressure Top		Pore Pressure Bottom		Drain Tube Reading Tube 1		Drain Tube Reading Tube 2		Temperature	
	lbf/in²	kPa	lbf	Newtons	in	mm	in	cm	lbf/in²	kPa	lbf/in²	kPa	in	cm	in	cm	°F	°C
	(1)		(2)		(3)		(4)		(5)		(6)		(7)		(8)		(9)	
1	0.0		0		1.276		17.76		0.0		0.0		—		1		71.2	
2	97.0		0		1.283		23.81		68.0		68.0		—		45		71.0	
3	97.0		19		1.275		23.82		68.0		68.0		—		46		70.6	
4	97.0		93		1.225		23.77		68.0		68.0		—		51		72.3	
5	97.0		124		1.184		24.15		68.0		68.0		—		55		71.7	
6	97.0		149		1.134		24.78		68.0		68.0		—		60		70.7	
7	97.0		161		1.094		24.72		68.0		68.0		—		64		71.8	
8	97.0		161		1.084		24.69		68.0		68.0		—		65		72.2	
9	97.0		183		0.972		25.43		68.0		68.0		—		76		71.2	
10	97.0		180		0.872		25.43		68.0		68.0		—		81		70.1	
11	97.0		201		0.767		25.39		68.0		68.0		—		86		71.1	
12	97.0		212		0.667		25.31		68.0		68.0		—		91		69.6	
13	97.0		219		0.567		25.21		68.0		68.0		—		96		69.3	
14	97.0		225		0.466		25.13		68.0		68.0		—		101		68.8	
15	97.0		225		0.366		25.07		68.0		68.0		—		106		70.6	
16	97.0		227		0.266		25.00		68.0		68.1		—		111		69.7	
17	0.0		0		0.262		25.78		0.0		-0.5		—		112		69.2	
18																		
19																		
20																		

GPO 852 - 188

Figure 4. - Triaxial shear test — data sheet 2 — example.

7-2372 (1-89)
Bureau of Reclamation

TRIAXIAL SHEAR TEST-DATA SHEET 3

Designation USBR 5755.89

SAMPLE NO.	SPECIMEN NO.	PROJECT	FEATURE
61W-9	1	Example	Example

Initial specimen length (L_o)	Specimen length at start of shear L_s	Initial specimen area ($A_o = V_o \div L_o$)	Initial specimen volume (V_o)
5.000 ☒ in ☐ mm	4.999 ☒ in ☐ mm	3.128 ☒ in² ☐ mm²	15.639 ☒ in³ ☐ mm³

TESTED BY	DATE	COMPUTED BY	DATE	CHECKED BY	DATE

	Applied lateral pressure (from column 1) (1.0)	Corrected deviator load $P_{dc} = (2) - (10)(A_p)$	Axial specimen deformation* $\Delta L = (3_i) - (3_i)$	Volume tube change* $\Delta VT = (4_i) - (4_i)$	Converted volume tube change $\Delta VT_n = (13) \times (VT_f)$	System volume change due to applied lateral pressure $\Delta VC = [(10) - LTPR] \times SL + Y$	Volume change due to piston movement $\Delta V_p = (12) \times (A_p)$	Volume change due to temperature change $\Delta TV = [(9_i) - (9_i)] \times (T_f)$	Total volume change $\Delta V = (14) + (15) - (16) + (17)$	Specimen volume $V_i = V_o + (18)$	Specimen length $L_i = L_o - (12)$	Axial strain from start of shear $\epsilon = \frac{L_s - (20_i)}{L_s} \times 100$	Volume strain from initial $\epsilon_v = \frac{(18) \times (-1.0)}{V_o} \times 100$	Volume strain from start of shear $\epsilon_{vs} = \frac{[(19) - (19) \text{ at start of shear}] \times (-1.0)}{\text{spec. volume at start of shear}} \times 100$	Effective lateral stress $\sigma 3' = (10) - (6)$ ** (Minor effective principal stress)	Corrected specimen area $A_c = (19) / (20)$	Deviator stress $\sigma_d = (11) / (25)$	Effective axial stress $\sigma_1' = (24) + (26)$ (Major effective principal stress)	Effective Stress ratio $S_r = (27) / (24)$	$p' = [(27) + (24)] / 2$	$q' = (26) / 2$	Effective normal stress $\sigma' = (29) - [(30) \times \sin \phi]$	Shear stress $\tau' = (30) \times \cos \phi$	Top excess pore pressure $\Delta U_{ts} = (5) - (5)$ prior to start of shear	Bottom excess pore pressure $\Delta U_{bs} = (6) - (6)$ prior to start of shear	Pore pressure coefficient $A = \frac{(33) \text{ or } (34)}{(26)}$
	lbf/in² kPa	lbf kN	in cm	in cm³	in³ cm³	in³ cm³	in³ cm³	in³ cm³	in³ cm³	in³ cm³	in cm	%	%	%	lbf/in² kPa	in² cm²	lbf/in² kPa	lbf/in² kPa		lbf/in² kPa	lbf/in² kPa	lbf/in² kPa	lbf/in² kPa	lbf/in² kPa	lbf/in² kPa	lbf/in² kPa
	(10)	(11)	(12)	(13)	(14)	(15)	(16)	(17)	(18)	(19)	(20)	(21)	(22)	(23)	(24)	(25)	(26)	(27)	(28)	(29)	(30)	(31)	(32)	(33)	(34)	(35)
1	0.0	0.0	0.000	0.00	0.000	0.000	0.000	0.000	0.000	15.639	5.000	—	0.00	—	0.0	3.128	0.00	0.00	0.000	—	—	—	—	—	—	—
2	97.0	-19.1	-0.007	-6.05	-0.726	0.272	-0.001	0.002	-0.451	15.188	5.007	—	2.88	—	29.0	3.033	-6.30	22.70	0.783	—	—	—	—	—	—	—
3	97.0	-0.05	0.001	-6.06	-0.727	0.272	0.000	0.007	-0.448	15.191	4.999	0.00	2.86	0.00	29.0	3.039	-0.02	28.98	0.999	28.99	-0.01	28.99	-0.01	—	—	—
4	97.0	73.9	0.051	-6.01	-0.721	0.272	0.010	-0.013	-0.472	15.167	4.949	1.00	3.02	0.16	29.0	3.065	24.11	53.11	1.831	41.06	12.06	36.66	11.23	—	—	—
5	97.0	104.9	0.092	-6.39	-0.767	0.272	0.018	-0.006	-0.519	15.120	4.908	1.82	3.32	0.47	29.0	3.081	34.05	63.05	2.174	46.03	17.03	39.82	15.86	—	—	—
6	97.0	129.9	0.142	-7.02	-0.842	0.272	0.028	0.006	-0.592	15.047	4.858	2.82	3.79	0.95	29.0	3.097	41.94	70.94	2.446	49.97	20.97	42.32	19.52	—	—	—
7	97.0	141.9	0.182	-6.96	-0.835	0.272	0.036	-0.007	-0.606	15.033	4.818	3.62	3.87	1.04	29.0	3.120	45.48	74.48	2.568	51.74	22.74	43.44	21.17	—	—	—
8	97.0	141.9	0.192	-6.93	-0.832	0.272	0.038	-0.012	-0.610	15.029	4.808	3.82	3.90	1.07	29.0	3.126	45.39	74.39	2.565	51.70	22.70	43.42	21.13	—	—	—
9	97.0	163.9	0.304	-7.67	-0.920	0.272	0.060	0.000	-0.708	14.931	4.696	6.06	4.53	1.71	29.0	3.180	51.54	80.54	2.777	54.77	25.77	45.37	23.99	—	—	—
10	97.0	160.9	0.404	-7.69	-0.923	0.272	0.079	0.013	-0.717	14.922	4.596	8.06	4.58	1.77	29.0	3.247	49.55	78.55	2.709	53.78	24.78	44.74	23.07	—	—	—
11	97.0	181.9	0.509	-7.63	-0.916	0.272	0.100	0.001	-0.743	14.896	4.491	10.16	4.75	1.94	29.0	3.317	54.84	83.84	2.891	56.42	27.42	46.42	25.53	—	—	—
12	97.0	192.9	0.609	-7.55	-0.906	0.272	0.120	0.018	-0.736	14.903	4.391	12.16	4.71	1.90	29.0	3.394	56.84	85.84	2.960	57.42	28.42	47.05	26.46	—	—	—
13	97.0	199.9	0.709	-7.45	-0.894	0.272	0.139	0.022	-0.739	14.900	4.291	14.16	4.73	1.92	29.0	3.472	57.57	86.57	2.985	57.79	28.79	47.29	26.81	—	—	—
14	97.0	205.9	0.810	-7.37	-0.884	0.272	0.159	0.028	-0.743	14.896	4.190	16.18	4.75	1.94	29.0	3.555	57.92	86.92	2.997	57.96	28.96	47.39	26.96	—	—	—
15	97.0	205.0	0.910	-7.31	-0.877	0.272	0.179	0.007	-0.777	14.862	4.090	18.18	4.97	2.17	29.0	3.634	56.66	85.66	2.954	57.33	28.33	46.99	26.38	—	—	—
16	97.0	207.9	1.010	-7.24	-0.869	0.272	0.198	0.017	-0.778	14.861	3.990	20.18	4.97	2.17	28.9	3.725	55.81	84.71	2.931	56.81	27.91	4663	25.99	—	—	—
17	0.0	0.0	1.014	-8.02	-0.962	0.000	0.199	0.023	-1.138	14.501	3.986	20.26	7.28	4.54	0.5	3.638	0.00	0.5	1.000	—	—	—	—	—	—	—
18																										
19																										
20																										

-sign designates start of shear (touch)

GPO 856-792

*Subscript 1 denotes initial reading
Subscript i denotes any subsequent reading

**Bottom pore pressure shown; may use top pore pressure value (10) - (5) or average pore pressure, (10) - ([(5) + (6)] ÷ 2)

0 – _____

Figure 5. - Triaxial shear test — data sheet 3 — example.

14.14.5 Place two O-rings, of appropriate size, on the bottom of the O-ring expander. Position the expander around the specimen with the bottom of the expander around the middle of the bottom end plate. Roll the O-rings into position around the end plate to seal the membrane.

14.14.6 Remove the expander from around the specimen.

14.14.7 Place two O-rings on the top end of the O-ring expander. Position the expander at approximately midheight of the test specimen with the top of the expander near the middle of the top end plate.

14.14.8 Remove the O-rings from the top end cap. Roll the membrane down from the top of the specimen and remove the end cap.

14.14.9 Blot any excess water from the surface of the porous insert in the top end plate and close valve F.

14.14.10 Carefully place the top end plate into position on top of the test specimen.

14.14.11 Roll the membrane up over the sides of the top end plate. Roll the O-rings from the expander onto the membrane so the membrane seals against the middle of the top end plate. Remove the expander from around the specimen.

NOTE 4.–The expander is split into halves and is hinged on one side to facilitate removal from around the specimen.

14.15 Lightly grease the upper and lower ends of the chamber.

14.16 Carefully place the chamber into position in the groove in the chamber bottom plate.

14.17 Attach a hose from the de-aired water source to the de-aired water source (valve N) line and begin filling the chamber through the chamber bottom plate with de-aired water. As water rises in the chamber, use a squeeze bulb to remove any air bubbles that may be present on the bottom and sides of the chamber and specimen.

14.18 Fill the chamber completely with de-aired water. Close valve N.

14.19 Open valve A and set the chamber cap in place. Force the chamber cap down onto the chamber until it is properly seated.

14.20 Open valve N and continue filling the chamber with de-aired water until water flows out of chamber cap relief valve A. Close valve A and continue filling so that any air remaining in the system is forced up through the ball bushing.

14.21 When water flows out of the top of the ball bushing, close valve N.

14.22 Screw the chamber bolts into the chamber bottom plate and set the chamber cap hold down plate into place.

14.23 Secure the chamber cap to the chamber bottom plate by screwing the four nuts onto the four chamber bolts; tighten the nuts in a staggered sequence to about 50 ft-lbf torque.

14.24 Lightly grease the piston, open valve A, and carefully push the piston through the ball bushing in the center of the chamber cap until the piston tip fits into the socket in the top end plate. Check that the piston is firmly in contact with the top end plate but does not apply excessive pressure to the specimen (by feel). Close valve A.

14.25 Attach the axial deformation indicator (fig. 1), and adjust its range so that deformation of the test specimen can be recorded.

14.26 Open valves L and K to the differential pressure transducer.

14.27 Attach and secure the piston retainer bar. Be careful not to disturb the specimen. The purpose of the piston retainer bar is to prevent the piston from being forced out of the chamber when lateral pressure is applied inside the chamber.

14.28 Open valve A. Slowly open volume tube valve E until water flows out of chamber cap relief valve A. When the level of water in the volume tube has reached the desired level for starting the test—usually the 10-inch (250-mm) level—close valve A.

NOTE 5.–The desired volume tube water level is dependent on the volume change potential of the soil being tested. For test specimens whose anticipated volume change is slight, the volume tube can be filled to a higher level than for test specimens whose anticipated volume change is great.

14.29 Make sure the air pressure regulators are set to zero and attach air pressure hoses to the tops of the volume tube and drain tubes.

14.30 Read and record:

Initial applied lateral pressure	Top and bottom pore pressure readings
Deviator load reading	Tube 1 and tube 2 drain tube readings
Axial specimen deformation reading	Chamber fluid temperature
Volume tube reading	Date

as shown on figure 4 (data sheet 2).

14.31 Specimen saturation by application of back pressure follows:

14.31.1 Open valve E and apply 5 lbf/in^2 (35 kPa) lateral pressure to the fluid in the chamber to seat the triaxial assembly.

14.31.2 Determine and record appropriate data as shown on data sheet 2 (fig. 4).

14.31.3 Open valves F and G and increase the lateral pressure and back pressure simultaneously, maintaining a difference of approximately 2 to 5 lbf/in^2 between the two pressures. Never allow the back pressure to equal or exceed the lateral pressure.

NOTE 6.–Time required for the pore fluid to reach an equilibrium condition under the applied back pressure increment can vary greatly depending on soil type, initial degree of saturation, and size of specimen. Normally the back pressure can be raised to 60 lbf/in^2 (414 kPa) over a period of 30 minutes.

NOTE 7.–For most soils, a back pressure of 60 lbf/in^2 should be applied before the pore pressure coefficient B is checked.

14.31.4 Close drain tube valves F and G.

14.31.5 Increase the lateral pressure by 5 lbf/in².

14.31.6 Open pore pressure transducer valves H and I. Determine and record the pore pressure at the top and bottom of the specimen. Close valves H and I.

NOTE 8.–To determine if saturation is complete, the pore pressure coefficient B is calculated. Specimens are considered saturated if B is equal to or greater than 0.95 or if B remains unchanged after application of additional back pressure increments. See figure 6 for an example of B parameter calculations. An alternative method of determining if saturation is complete is to first measure pore water pressure at a point when consolidation is thought to be complete. Then immediately close valves C and D. After 10 minutes, measure pore water pressure. Calculate the percent pore pressure dissipation using the following:

$$U = \frac{u - u_B}{u_o - u_B} \times 100\%$$

where:

U = percent pore pressure dissipation, %
u = pore pressure after valves C and D closed, lbf/in²
u_o = pore pressure before closure of valves C and D, lbf/in²
u_B = back pressure, lbf/in²

If U is equal to or greater than 95 percent, the consolidation of the test specimen is complete.

NOTE 9.– For many specimens, the pore pressure may decrease after an immediate increase and then increase slightly with time. If the pore pressure immediately equals the lateral pressure this may indicate a leak of chamber fluid into the specimen. Decreasing pore pressure with time may indicate a leak in a part of the pore pressure measurement system located outside the chamber.

14.31.7 Compute the B value by dividing the value of the induced pore pressure increment (response due to applied lateral pressure increment) by the increase in applied lateral pressure increment (5 lbf/in²). If the B value is less than 0.95, continue the back-pressure process by repeating subparagraph 14.31.5. If the B value is equal to or greater than 0.95, initiate the consolidation process starting at subparagraph 14.32. Normally, the specimen should be allowed to set for at least 30 minutes between B value determinations.

14.32 *Consolidating the specimen follows*:

NOTE 10.–The objective of the consolidation phase of the test is to allow the specimen to reach equilibrium in a drained state under the effective consolidation pressure for which the shear strength determination is required. During consolidation, data are obtained for use in determining when consolidation is complete.

14.32.1 Open specimen drain tube valves F and G. Increase the lateral pressure until the difference between the lateral pressure and the back pressure equals the desired effective consolidation pressure.

14.32.2 At increasing intervals of elapsed time (approximately 0.1, 0.2, 0.5, 1, 2, 4, 8, and 24 minutes and 1, 2, 4, and 8 hours, etc.) observe and record volume tube height readings.

14.32.3 Allow the specimen to consolidate under the specified effective consolidation pressure until 100-percent primary consolidation is obtained. Consolidation is considered complete based on a marked reduction in the slope of the specimen volume versus square root of time plot. Figure 7 shows an example of this type of plot.

14.33 Determine the "touch" point.

14.33.1 After completion of primary consolidation, specimen drain tube valves F and G are left open.

14.33.2 Attach a calibrated load cell to the crosshead of the compression test machine. Carefully place the triaxial assembly in the compression test machine.

14.33.3 Align the load cell and load transfer piston of the triaxial assembly.

14.33.4 Compute deviator load due to applied lateral pressure.

NOTE 11.–Deviator load due to applied lateral pressure is based on the area of the piston. The piston area [item (a) from "Triaxial Shear Test—Data Sheet 2", fig. 4] is multiplied by the applied lateral pressure to obtain the force the piston exerts on the load cell. This force is subtracted from the deviator load to obtain the actual axial force applied to the specimen.

14.33.4.1 When deviator load due to applied lateral pressure has been computed, determine and record all values as described in subparagraph 14.31. Begin to apply load slowly to the piston. When the deviator load reading just equals the deviator load due to applied lateral pressure (corrected deviator load equals zero), stop the piston movement. This is "touch" point—the point at which the piston just contacts the top end plate on the specimen.

14.33.4.2 When "touch" has been established, determine and record all values as described in subparagraph 14.30. Place a minus sign in the left hand margin of data sheet 2 (fig. 4) directly opposite the data line at which "touch" was obtained. The minus sign serves as an easy reference as to when "touch" was achieved.

14.34 *Rate of Loading*.–The specimen may be compressed in one of two manners, either (1) by controlling the rate of applied axial compressive stress or (2) by controlling the rate of axial strain.

14.34.1 Controlled rate of axial stress:

14.34.1.1 Axial load is applied to the specimen in such a manner that the rate of stress increase is constant.

14.34.1.2 The axial stress application rate should be based on field conditions being modeled in the laboratory.

14.34.2 Controlled rate of axial strain:

14.34.2.1 If the specimen is to be compressed at a controlled rate of axial strain, a rate of 0.002 percent per minute should be used unless otherwise specified in the testing request. Table 4 lists recommended displacement rates and strain rates for various specimen dimensions.

Table 4. – Recommended displacement and strain rate for various test specimen sizes.

Test specimen size				Displacement rate		Strain rate
Diameter	Height	Diameter	Height			
in	in	mm	mm	in/min	mm/min	%
2.0	5.0	50.8	127.0	0.00010	0.00254	0.002
2.8	7.0	71.1	177.8	.00014	.00356	.002
6.0	15.0	152.4	381.0	.00030	.00762	.002
9.0	22.5	228.6	571.5	.00045	.01143	.002

7-2410 (1-89)
Bureau of Reclamation

TRIAXIAL SHEAR TEST-B-VALUE DETERMINATION

Designation USBR 5755 - 89

SAMPLE NO.	SPECIMEN NO.	PROJECT	FEATURE
61W-9	1	Example	Example

TESTED BY	DATE	COMPUTED BY	DATE	CHECKED BY	DATE

DATE	TME	APPLIED LATERAL PRESSURE ☒ lbf/in² ☐ KPa			TOP PORE PRESSURE ☒ lbf/in² ☐ KPa			BOTTOM PORE PRESSURE ☒ lbf/in² ☐ KPa			AVERAGE PORE PRESSURE DIFFERENCE $\Delta\mu = [(8) + (11)]/2$	B - VALUE $B = \frac{(12)}{(5)}$
		INITIAL READING σ_{3_I}	FINAL READING σ_{3_F}	DIFFERENCE $\Delta\sigma_3 = (4) - (3)$	INITIAL READING μ_{T_I}	FINAL READING μ_{T_F}	DIFFERENCE $\Delta\mu_T = (7) - (6)$	INITIAL READING μ_{B_I}	FINAL READING μ_{B_F}	DIFFERENCE $\Delta\mu_B = (10) - (9)$		
(1)	(2)	(3)	(4)	(5)	(6)	(7)	(8)	(9)	(10)	(11)	(12)	(13)
2/15	0800	59.7	64.7	5.0	58.5	62.7	4.2	58.5	62.7	4.2	4.2	0.84
2/15	1500	64.7	69.7	5.0	62.7	67.6	4.9	62.7	67.6	4.9	4.9	0.98

Figure 6. – Triaxial shear test—*B*-value determination — example.

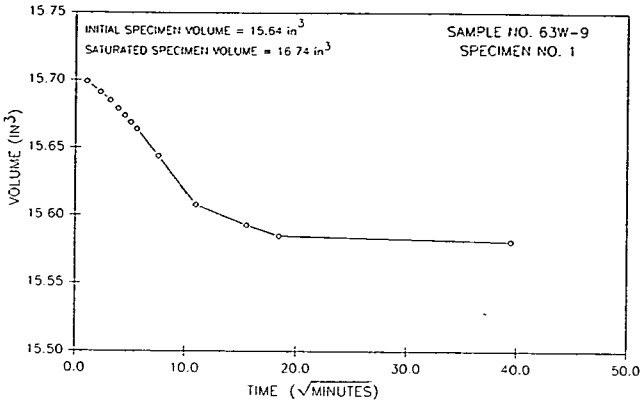

Figure 7. - Specimen volume versus square root of time — example.

14.35 *Data Acquisition Rate*:

14.35.1 If an automatic data acquisition system is used, data readings should be recorded at 0.20-percent axial strain intervals as shown on table 5.

Table 5. - Data collection intervals for various test specimen sizes.

Test specimen size				Data collection interval		
Diameter	Height	Diameter	Height	Displacement		Axial strain
in	in	mm	mm	in	min	%
2.0	5.0	50.8	127.0	0.010	0.254	0.20
2.8	7.0	71.1	177.8	.014	0.356	.20
6.0	15.0	152.4	381.0	.030	0.762	.20
9.0	22.5	228.6	571.5	.045	1.143	.20

14.36 *Compressive Stress Application*:

14.36.1 Single stage compression of multiple specimens (standard procedure):

14.36.1.1 Start loading the specimen at the prescribed rate; determine and record all parameters at the recommended interval.

14.36.1.2 Continue loading the specimen until axial strain equals 20 percent.

NOTE 12.-Due to data acquisition system restraints in the Bureau's geotechnical laboratory in Denver, Colorado, the triaxial test may be continued until axial strain is approximately 20 percent. However, it may be appropriate to discontinue the test at some other point if possible, such as 5-percent axial strain past maximum deviator stress.

14.36.1.3 When loading is complete, stop the compression test machine; unload the specimen until the load indicator registers zero.

14.36.2 Multistage compression of single specimen (optional procedure):

14.36.2.1 Start loading the specimen at the prescribed rate, determine and record all parameters at the recommended interval.

14.36.2.2 Compute, plot, and monitor the stress difference (deviator stress), axial strain, and effective stress ratio.

14.36.2.3 Continue loading the specimen until one of the following criteria are met.

14.36.2.3.1 Axial strain equals 5 percent (20% at final lateral pressure).

14.36.2.3.2 Stress difference or effective stress ratio curve starts to peak or flatten out.

14.36.2.4 When the criteria stated in subparagraphs 14.36.2.3 is satisfied, stop the compression test machine and unload the specimen until the load indicator registers zero.

14.36.2.5 Apply the next lateral pressure and repeat the procedure beginning at subparagraph 14.32.

14.37 Carefully release the lateral pressure. Close all valves to the chamber. Open valve A. Attach the drain tube to valve N. Open valves N and R and drain the water from the chamber.

14.38 Engage the controls on the compression test machine which allow manual control of the loading device. Back the load transfer piston away from the load cell.

14.39 Dismantle the triaxial assembly.

14.40 Photograph the specimen while it is still on the chamber bottom plate with the end plates attached.

14.41 Release the membrane from the top and bottom end plates by moving or removing the O-rings and rolling the ends of the membrane off of the end plates.

14.42 Carefully remove the specimen from the end plates.

14.43 Carefully remove the membrane from the specimen.

14.44 Photograph the specimen with the membrane removed.

14.45 Determine the moisture content of the test specimen, in accordance with USBR 5300, using the entire specimen or a representative portion taken along the entire length of the specimen.

14.46 For single stage compression of multiple specimens, repeat CD triaxial shear test on new specimens at specified lateral pressures until at least three specimens have been tested and resulting data have been recorded.

15. Calculations

15.1 Perform all calculations on "Triaxial Shear Test—Data Sheet 3" (fig. 5) as specified, and record in the appropriate columns.

15.2 All calculations are based on data recorded on data sheets 1 and 2 (figs. 3 and 4).

15.2.1 Enter the following information on the heading of figure 5 (data sheet 3). Read and record:

Sample No.,

Specimen No.,

Initial specimen volume (V_o) (from fig. 3, data sheet 1),

Initial specimen length (L_o) (from data sheet 1), and

Compute the initial specimen area (A_o) by dividing V_o by L_o.

15.2.2 *Applied lateral pressure* [fig. 5, col. (10)] is the applied lateral pressure from figure 4 [data sheet 2, col. (1)].

15.2.3 *Corrected deviator load* [col. (11)] is the deviator load corrected for the upward force due to lateral pressure acting on the piston.

$$P_{dc} = P_d - (A_p\ \sigma_3) \quad (1)$$

where:
P_{dc} = corrected deviator load, lbf
P_d = deviator load, lbf
A_p = load piston area, in^2
σ_3 = applied lateral pressure, lbf/in^2

15.2.4 *Axial specimen deformation* [col. (12)] is calculated.

$$\Delta L = L_1 - L_i \quad (2)$$

where:
ΔL = axial specimen deformation (change in specimen length), in
L_1 = initial axial specimen deformation indicator reading, in
L_i = subsequent axial deformation indicator reading, in

15.2.5 *Volume tube change* [col. (13)] is the change in fluid level (linear units) in the volume tube.

$$\Delta VT = VT_1 - VT_i \quad (3)$$

where:
ΔVT = volume tube change, in
VT_1 = initial volume tube reading, in
VT_i = subsequent volume tube reading, in

15.2.6 *Converted volume tube change* [col. (14)] is the volume tube converted from linear units to volumetric units.

$$\Delta VT_n = \Delta VT\ (VT_f) \quad (4)$$

where:
ΔVT_n = converted volume tube change, in^3
ΔVT = volume tube change, in
VT_f = volume tube factor, in^3/in, from USBR 1455

15.2.7 *System volume change due to applied lateral pressure* [col. (15)] is the expansion or contraction of the triaxial system (in cubic inches) due to a change in applied lateral pressure (see fig. 6).

$$\Delta VC = [(\sigma_3 - LTPR_i)]\ (SL_i) + Y_i \quad (5)$$

where:
ΔVC = system volume change due to applied lateral pressure, in^3
σ_3 = applied lateral pressure, lbf/in^2
$LTPR_i$ = lateral pressure intercept for lateral pressure increment considered, lbf/in^2
SL_i = slope of line relating volume change to applied lateral pressure for pressure increment considered, in^3/(lbf/in^2)
Y_i = volume change intercept for lateral pressure increment considered, in^3

NOTE 13.–A curve for system volume change versus lateral pressure must be developed for each triaxial shear test system and is unique for that particular system (see fig. 8). This curve is developed when the triaxial shear test system is calibrated (USBR 1450).

15.2.8 *Volume change due to piston movement* [col. (16)] due to displacement of water by piston entry into the chamber.

$$\Delta V_p = \Delta L\ A_p \quad (6)$$

where:
ΔV_p = volume change due to piston volume movement, in^3
ΔL = change in specimen length, in
A_p = load piston area, in^2

15.2.9 *Volume change due to temperature change* [col. (17)] is the change of the confining fluid in the cell due to temperature change.

$$\Delta TV = T_f\ (T_1 - T_i) \quad (7)$$

where:
ΔTV = volume change due to temperature change, in^3
T_f = temperature correction coefficient, in^3/°F
T_1 = initial temperature reading of water in chamber, °F
T_i = subsequent temperature reading of water in chamber, °F

See appendix X1 for derivation of the temperature correction coefficient.

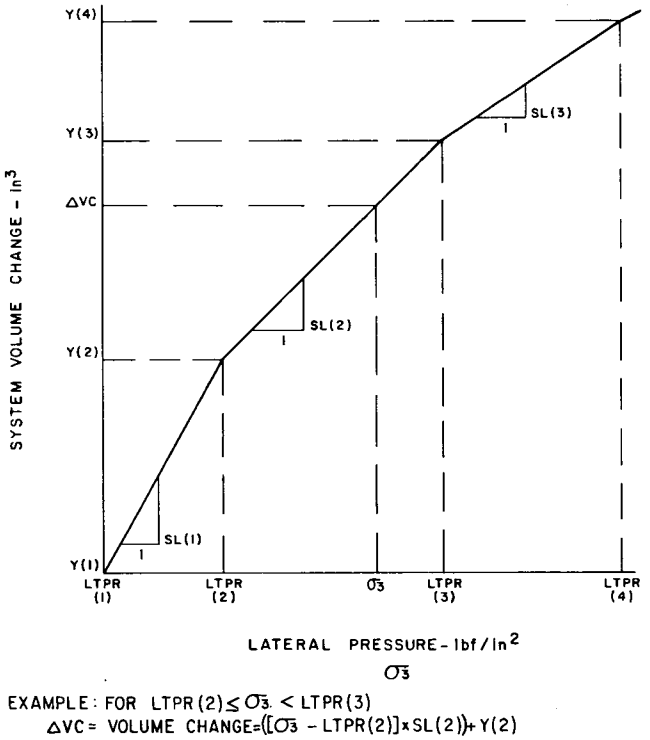

Figure 8. – Volume change of system due to applied lateral pressure.

15.2.10 *Total volume change* [col. (18)] is calculated.

$$\Delta V = \Delta VT_n + \Delta VC - \Delta V_p + \Delta TV \quad (8)$$

where:
ΔV = total volume change, in³
ΔVT_n = converted volume tube change, in³
ΔVC = system volume change due to applied lateral pressure, in³
ΔV_p = volume change due to piston movement, in³
ΔTV = volume change due to temperature change, in³

15.2.11 *Specimen volume* [col. (19)] is the volume of the specimen at any subsequent point during the test.

$$V_i = V_o + \Delta V \quad (9)$$

where:
V_i = subsequent specimen volume, in³
V_o = initial specimen volume, in³
ΔV = total volume change, in³

15.2.12 *Specimen length* [col. (20)] is the length of the specimen at any subsequent point during the test.

$$L_i = L_o - \Delta L \quad (10)$$

where:
L_i = subsequent specimen length, in
L_o = initial specimen length, in
ΔL = axial specimen deformation (change in specimen length), in

15.2.13 *Axial strain from start of shear* ϵ [col. (21)] is calculated.

$$\epsilon = 100 \left(\frac{L_s - L_i}{L_s} \right) \quad (11)$$

where:
ϵ = axial strain from start of shear, %
L_s = specimen length at start of shear, in
L_i = subsequent specimen length, in
100 = convert from decimal to percent

15.2.14 *Volume strain from initial*, ϵ_v, [col. (22)] is the volumetric strain in percent of initial specimen volume.

$$\epsilon_v = 100 \left[\frac{\Delta V \ (-1.0)}{V_o} \right] \quad (12)$$

where:
ϵ_v = volume strain from initial, %
ΔV = total volume change, in³
-1.0 = constant to establish sign convention where positive values indicate compression and negative values indicate expansion
V_o = initial specimen volume, in³
100 = convert from decimal to percent

15.2.15 *Volume strain from start of shear*, ϵ_{vs} [col. (23)] is the volumetric strain in percent of specimen volume at start of shear.

$$\epsilon_{vs} = 100 \left[\frac{(V_i - V_{is}) \ (-1.0)}{V_{is}} \right] \quad (13)$$

where:
ϵ_{vs} = volume strain from start of shear, %
V_i = specimen volume at subsequent reading, in³
V_{is} = specimen volume at start of shear, in³
-1.0 = constant to establish the sign convention where positive values indicate compression and negative values indicate expansion
100 = converts from decimal to percent

15.2.16 *Effective lateral stress* [col. (24)] is calculated.

$$\sigma_3' = \sigma_3 - u \quad (14)$$

where:
σ_3' = effective lateral stress (minor effective principal stress), lbf/in²
σ_3 = applied lateral pressure, lbf/in²
u = pore pressure, lbf/in²

15.2.17 *Corrected specimen area* [col. (25)] is calculated.

$$A_c = \frac{V_i}{L_i} \quad (15)$$

where:
A_c = corrected specimen area, in²
V_i = specimen volume at a subsequent reading, in³
L_i = specimen length at same subsequent reading, in

15.2.18 *Deviator stress*, σ_d [col. (26)] is calculated.

$$\sigma_d = \frac{P_{dc}}{A_c} \quad (16)$$

where:
σ_d = deviator stress, lbf/in²
P_{dc} = corrected deviator load at a given reading, lbf
A_c = corrected specimen area at the same given reading, in²

15.2.19 *Effective axial stress* [col. (27)] is calculated.

$$\sigma_1' = \sigma_3' + \sigma_d \quad (17)$$

where:
σ_1' = effective axial stress (major effective principal stress), lbf/in²
σ_3' = effective lateral stress (minor effective principal stress), lbf/in²
σ_d = deviator stress, lbf/in²

15.2.20 *Effective stress ratio* [col. (28)] is calculated.

$$S_r = \frac{\sigma_1'}{\sigma_3'} \quad (18)$$

where:
S_r = effective stress ratio, dimensionless
σ_1' = effective axial stress (major effective principal stress), lbf/in²
σ_3' = effective lateral stress (minor effective principal stress), lbf/in²

15.3 *p – q Diagram.*–A convenient method of plotting the state of stress, for a given soil specimen, is to plot

stress points on a $p - q$ diagram. The coordinate system for the $p - q$ diagram may be defined in terms of total or effective stress as follows:

Total stress	*Effective stress*
$p = \frac{(\sigma_1 + \sigma_3)}{2}$	$p' = \frac{(\sigma_1' + \sigma_3')}{2}$
$q = \frac{(\sigma_1 - \sigma_3)}{2} = \frac{\sigma_d}{2}$	$q' = q = \frac{\sigma_d}{2}$

where:
σ_1 = major principal stress, lbf/in²
σ_3 = minor principal stress, lbf/in²
σ_d = deviator stress, lbf/in²
σ_1' = major effective principal stress, lbf/in²
σ_3' = minor effective principal stress, lbf/in²

15.3.1 Record the calculated values of p' and q' or p and q in columns 29 and 30, respectively, on data sheet 3.

15.3.2 Repeat calculations described in subparagraphs 15.2.2 through 15.3.1 for all recorded data for all specimens.

15.3.3 For each specimen tested (minimum of 3), select an appropriate failure stress and locate corresponding p'- q' or $p - q$ values which are referred to as p'_f, q'_f or p_f, q_f.

15.3.3.1 Failure of test specimen may be defined in several ways:

(1) First maximum or maximum principal effective stress ratio (σ_1'/σ_3') maximum

(2) First maximum or maximum deviator stress (σ_d) maximum

(3) Shear stress at a prescribed axial strain

(4) Any other criteria consistent with the condition being analyzed

15.3.4 Plot all calculated values of $p' - q'$ or $p - q$ for each specimen as shown on figure 9.

15.3.4.1 Connect the respective stress points for each specimen with a line or curve as shown on figure 9. This curve is a continuous representation of successive states of stress to which each specimen was subjected during testing and is called a "stress path."

15.3.5 Fit a straight line through the stress points corresponding to failure ($p'_f - q'_f$) on the $p - q$ diagram; use either a visual best fit or a mathematical fitting technique such as linear regression. This line is the K_f-line. Determine and draw the K_f-line (fig. 9).

NOTE 14.–The K_f-line can be determined by performing a linear regression analysis of stress points at failure.

15.3.5.1 The equation of the K_f-line is of the linear form $y = mx + b$. It is defined for effective stress conditions as follows:

$$q'_f = a + p'_f (\tan \psi) \qquad (19)$$

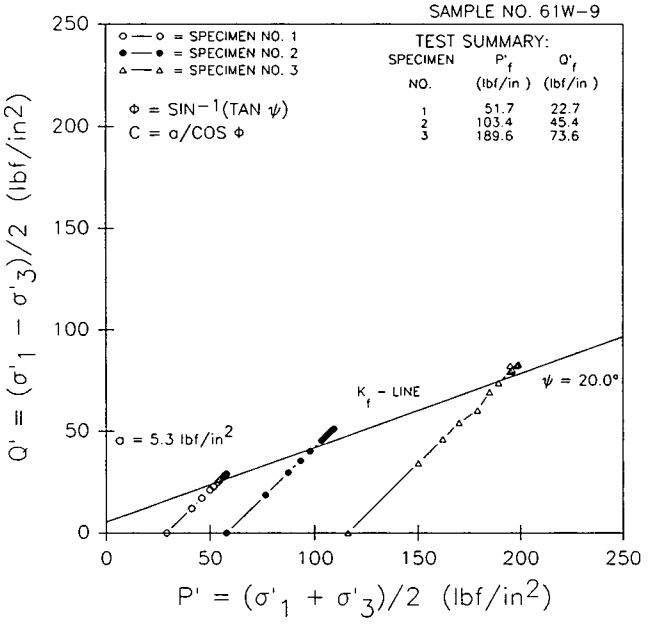

Figure 9. - p' - q' diagram — example.

where:
q'_f = q' at failure, lbf/in²
p'_f = p' at failure, lbf/in²
a = intercept of the K_f-line on q-axis, lbf/in²
tan ψ = slope of the K_f-line, dimensionless
ψ = angle of the K_f-line with respect to horizontal, degrees

15.4 *Mohr-Coulomb Effective Stress Shear Strength Parameters.*–The equation for the Mohr-Coulomb failure envelope, figure 10, is similar to that of the K_f-line in that both are linear. There are relationships from which effective stress shear strength parameters may be calculated using the parameters obtained from the $p - q$ diagram.

15.4.1 *Effective angle of internal friction, ϕ'*, is the angle the Mohr-Coulomb failure envelope makes with the horizontal and may be calculated using the relationship between the K_f-line and Mohr-Coulomb failure envelope.

$$\sin \phi' = \tan \psi \qquad (20)$$
$$\phi' = \sin^{-1} (\tan \psi)$$

where ϕ' equals effective angle of internal friction, degrees.

15.4.1.1 Calculate the effective angle of internal friction, ϕ', using the equation in subparagraph 15.4.1 and the value for tan ψ from subparagraph 15.3.5.1.

15.4.2 *Effective cohesion, c'*, is the shear stress intercept of the Mohr-Coulomb failure envelope. Cohesion may be calculated using the relationship between the K_f-line and the Mohr-Coulomb failure envelope.

$$c' = \frac{a}{\cos \phi'} \qquad (21)$$

where:
c' = effective cohesion, lbf/in²
a = intercept of the K_f-line on the q'-axis, lbf/in²

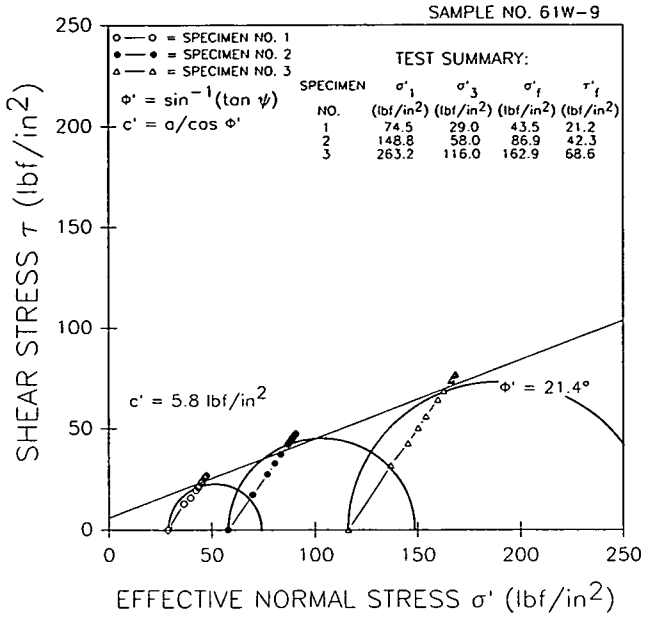

Figure 10. - Mohr's diagram — example.

15.4.2.1 Calculate the effective cohesion, c', using the equation in subparagraph 15.4.2 and the values for a and ϕ' from subparagraphs 15.3.5.1 and 15.4.1.1.

15.5 *Effective Stresses on Failure Plane.*-The effective normal stress, σ', and the shear stress, τ, that develop on the failure plane during shear may be calculated at any reading for each of the specimens tested.

15.5.1 *Effective normal stress*, σ', for each reading for each specimen using corresponding values of p', q', and ϕ' from figure 5 (data sheet 3), subparagraphs 15.3.1, and 15.4.1, respectively, is calculated.

$$\sigma' = p' - q' \sin \phi' \qquad (22)$$

where σ' equals effective normal stress, lbf/in^2.

15.5.1.1 Record values for σ' on figure 5 [data sheet 3, col. (31)].

15.5.2 Shear stress, τ, for each reading for each specimen using corresponding values of q' and ϕ' from figure 5 (data sheet 3), subparagraphs 15.3.3 and 15.4.1, respectively, is calculated.

$$\tau = q' \cos \phi' \qquad (23)$$

where τ equals shear stress, lbf/in^2.

15.5.2.1 Record values for τ on figure 5 [data sheet 3, col. (32)].

15.6 *Mohr's Diagram.*-A Mohr's circle can be constructed for every state of stress to which a specimen is subjected. However, the state of stress most often represented is the condition at failure (subpar. 15.3.5.1). The circle at failure is defined by the principal stresses which caused failure and the resulting normal and shear stresses on the failure plane.

15.6.1 Plot the Mohr's circle at failure for each specimen as shown on figure 10.

15.6.1.1 The center of each Mohr's circle is located using the p' value from figure 5 [data sheet 3, col. (29)].

$$p' = \frac{(\sigma'_{1f} + \sigma'_{3f})}{2} \qquad (24)$$

where:

p'_f = p' at failure, lbf/in^2
σ'_{1f} = major effective principal stress at failure, lbf/in^2
σ'_{3f} = minor effective principal stress at failure, lbf/in^2

15.6.1.2 The radius of the Mohr's circle is equal to q'_f for the selected failure point from figure 5 [data sheet 3, col. (30)].

$$q'_f = \frac{\sigma_{df}}{2} \qquad (25)$$

where:

q'_f = q' at failure, lbf/in^2
σ_{df} = deviator stress at failure, lbf/in^2

15.6.2 Locate the center of each circle on the same plot of shear stress versus effective normal stress and draw each circle using the corresponding radius (fig. 10).

15.6.3 Locate, and include on the Mohr's diagram, the Mohr-Coulomb failure envelope defined by the effective stress shear strength parameters ϕ' and c' as determined in subparagraphs 15.4.1.1 and 15.4.2.1, respectively (fig. 10).

15.6.4 Plot the effective normal stress [col. (31)] and shear stress [col. (32)] for each reading from figure 5 (data sheet 3) for each specimen on the Mohr diagram. Connect the respective points for each specimen with a line or curve (fig. 10). This curve is called a "vector curve."

15.7 Plot percent axial strain [col. (21)] versus deviator stress [col. (26)] from figure 5 (data sheet 3) for each specimen tested as shown on figure 11.

15.8 Plot percent axial strain [col. (21)] versus volume strain [col. (22)] from figure 5 (data sheet 3) for each specimen tested as shown on figure 12.

15.9 Plot percent axial strain [col. (21)] versus effective stress ratio [col. (28)] from figure 5 (data sheet 3) for each specimen tested as shown on figure 13.

16. Report

16.1 The report is to consist of the following completed and checked forms:

"Specimen Placement—Data Sheet 1" (fig. 3)
"Triaxial Shear Test—Data Sheet 2" (fig. 4)
"Triaxial Shear Test—Data Sheet 3" (fig. 5)

16.2 Data plots are required as follows:

"p' - q' Diagram" (fig. 9)
"Mohr's Diagram" (fig. 10)
"Percent Axial Strain versus Deviator Stress" (fig. 11)
"Percent Axial Strain versus Volume Strain" (fig. 12)
"Percent Axial Strain versus Effective Stress Ratio" (fig. 13)

16.3 All calculations are to show a checkmark and all plotting must be checked.

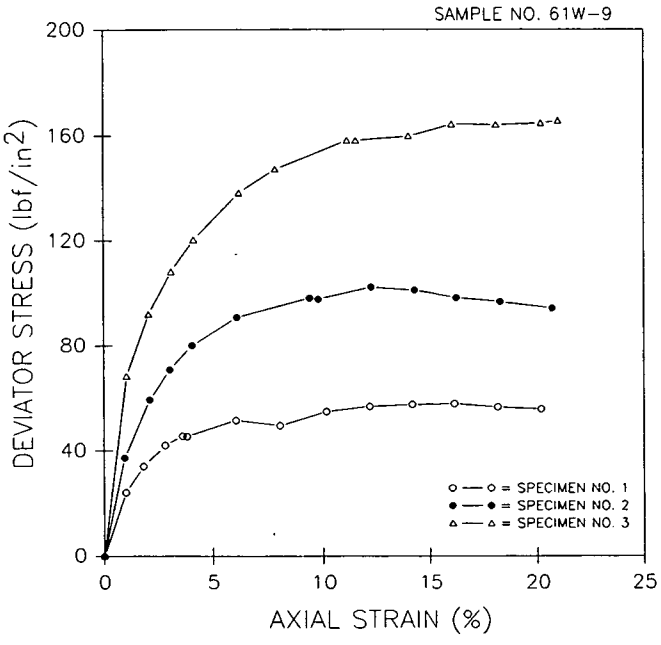

Figure 11. - Percent axial strain versus deviator stress — example.

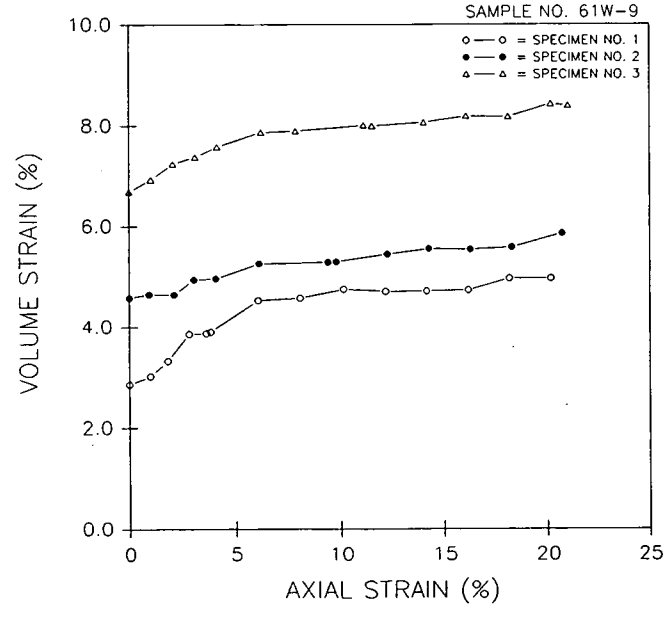

Figure 12. - Percent axial strain versus volume strain — example.

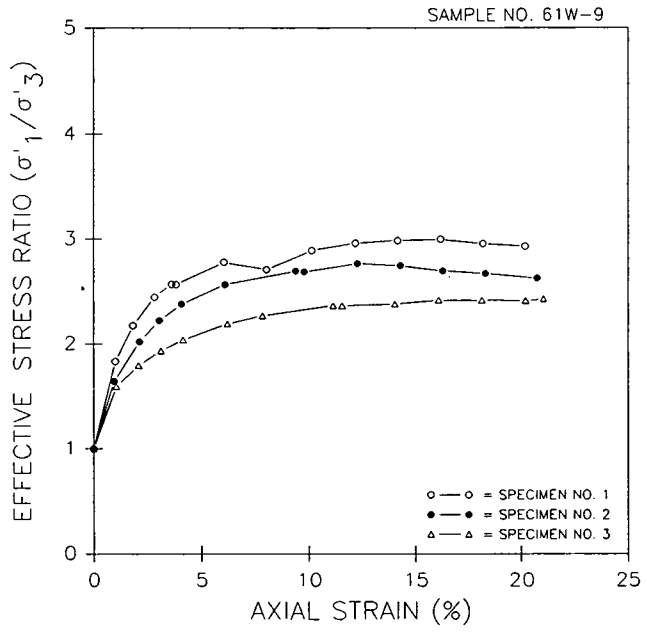

Figure 13. - Percent axial strain versus effective stress ratio — example.

17. Background Reference

Engineering and Design Laboratory Soil Testing, Department of the Army, Office of the Chief Engineers, Washington, D.C. 20314, EM 1110-2-1906, November 1970.

APPENDIX

X1. DETERMINING THE TEMPERATURE CORRECTION COEFFICIENT FOR WATER-FILLED TRIAXIAL ASSEMBLY

X1.1 Scope

X1.1.1 When performing triaxial shear tests, there are occasions when changes in ambient temperature can occur. These ambient temperature changes can affect the volume of the water used for monitoring volume change of the specimen during testing. This appendix presents a method for determining a temperature correction coefficient for computing correct specimen volume.

X1.2 Summary of Method

X1.2.1 A triaxial assembly is de-aired and filled with de-aired water. A thermometer or thermocouple is inserted into the water in the chamber. The triaxial assembly is placed in a location where the ambient temperature can be varied from approximately 65 to 75 °F. The ambient temperature is allowed to drop slowly to the lower limit of the ambient temperature range over a period of 8 to 12 hours. Then, the assembly is relocated into an environment where the ambient temperature will cause the temperature of the triaxial assembly to increase approximately 10 to 15 °F over a period of 6 to 8 hours. The temperature of the water in the triaxial assembly is measured and recorded to the nearest 0.1 °F and the water level in the volume tube is read and recorded to 0.01 inch. The data are used to compute the temperature correction coefficient for the assembly in cubic inch per degree Farenheit (cubic centimeter per degree Celsius).

NOTE X1.1–When determining this coefficient, the top and bottom end plates are removed from the triaxial assembly since no specimen is placed in the chamber. Pipe plugs are screwed into the chamber bottom plate where the top and bottom end plate lines had been attached.

NOTE X1.2–It is recommended that three trials be performed on an assembly to determine an average temperature correction coefficient. Since the volume of water in an assembly is one of the independent variables in determining the coefficient, the volume of water in an assembly should not be changed during the trials and a temperature correction coefficient should be determined for each different size triaxial assembly.

X1.3 Preparation of Apparatus

X1.3.1 De-airing the triaxial assembly (fig. 1):

X1.3.1.1 Place the chamber into the groove in the bottom plate.

X1.3.1.2 Verify that all the valves in the system are closed.

X1.3.1.3 Fill the chamber about one-half full with de-aired water.

X1.3.1.4 Open triaxial chamber cap relief valve A.

X1.3.1.5 Set the chamber cap in place, and force the cap down onto the chamber until it is properly seated.

X1.3.1.6 Insert the piston through the ball bushing until the piston flange is resting on top of the chamber cap.

X1.3.1.7 Open valve B to the top of the volume tube.

X1.3.1.8 Attach vacuum hoses to valve B on top of the volume tube and to the fitting on the chamber cap relief valve A.

X1.3.1.9 Attach the other ends of the vacuum hoses to a multiport manifold on the vacuum pump. Turn on the vacuum pump.

X1.3.1.10 Apply a vacuum of about 20 lbf/in² (140 kPa) for 5 minutes.

X1.3.1.11 Release the vacuum from the chamber (at valve A) by uncoupling the vacuum line at the vacuum pump. Maintain the vacuum on the volume tube.

X1.3.1.12 Open volume tube drain valve E and volume tube isolation valve R, and fill the volume tube to the top of its marking with de-aired water from the chamber (vacuum is still on the volume tube).

X1.3.1.13 Close volume tube drain valve E.

X1.3.1.14 Release the vacuum from the volume tube by uncoupling the appropriate vacuum line at the vacuum pump.

X1.3.1.15 Plug the vacuum hose that attaches to the chamber at relief valve A into the vacuum source.

X1.3.1.16 Open valve E and allow the water level in the volume tube to drop to about the 25-inch (635-mm) level.

X1.3.1.17 Close volume tube drain valve E.

X1.3.1.18 Reattach the vacuum hose to the top of the volume tube. Uncouple the vacuum hose to valve A.

X1.3.1.19 Displace water back and forth between the volume tube and the chamber by repeating subparagraphs X1.3.1.12 through X1.3.1.18 until air bubbles can not be seen in the volume tube.

X1.3.1.20 If the volume tube is not full at the end of the flushing phase, fill the tube by opening valve E. Fill the volume tube to about the 5-inch level with de-aired water, so that it can be drained to the desired level for the coefficient determination. Close valves A and E.

X1.3.1.21 Uncouple all the vacuum lines from the manifold on the vacuum pump and shut off the vacuum pump.

X1.3.1.22 Uncouple the vacuum line from valves A and B. Coil the vacuum lines up and store them in a suitable location for future use.

X1.3.1.23 Do not drain the water from the chamber at this time.

X1.3.2 De-airing the differential pressure transducer.

X1.3.2.1 Fill the flushing tank on the differential pressure transducer about two-thirds full with de-aired water. Close the volume tube isolation valve R to isolate the volume tube and differential pressure transducer from the chamber.

X1.3.2.2 Open valve L on the differential pressure transducer. Remove the bottom plate on the differential pressure transducer by unscrewing the four cap head screws which hold the bottom plate to the body of the transducer. Fill the bottom plate with de-aired water. Open valve M and fill the bottom plate with de-aired water from the flushing tank. Open valves E and K to the volume tube and allow water to flood over the exposed capsule located under the main body of the differential transducer. With water flowing, place the bottom plate back on the differential pressure transducer, being careful not to entrap air. Close valve K but leave valve M to the flushing tank slightly open to relieve any pressure which results from tightening the cap screws. Tighten the four cap head screws.

X1.3.2.3 Flush the differential pressure transducer thoroughly by attaching a hand-held vacuum/pressure pump to the top of the flushing tank. Open valves K and M and flush water back and forth several times from the flushing tank to the volume tube through the differential transducer. When this step is complete be sure that the water level in the volume tube is near the full mark and close valve M. Open the volume tube isolation valve R.

NOTE X1.3–Extreme caution must be used when flushing the differential pressure transducer system since a pressure greater than about 10 lbf/in^2 (70 kPa) can damage the measuring capsule inside the transducer.

X1.4 Procedure

X1.4.1 All data are to be recorded on the "Temperature Correction Coefficient" form as shown on figure X1.1.

X1.4.2 Record all identifying information pertaining to the triaxial assembly on the form.

X1.4.3 Connect a hose to valve N; place the other end of the hose in an empty container or into a drain.

X1.4.4 Drain about one quarter to one-third of the water from the chamber by opening valve N. Close valves A and N.

X1.4.5 Remove the piston and the chamber cap from the chamber.

X1.4.6 Verify that volume tube valve B is open.

X1.4.7 Verify that all remaining valves to the chamber are closed.

X1.4.8 Attach a hose from the de-aired water source to the de-aired water source line. Open valve N and begin filling the chamber through the chamber bottom plate with de-aired water. As water rises in the chamber, use a squeeze bulb to flush any air bubbles that may be present on the bottom and sides of the chamber.

X1.4.9 Fill the chamber completely with de-aired water. Close valve N.

X1.4.10 Remove relief valve A by unscrewing it from the chamber cap.

X1.4.11 Set the chamber cap in place. Force the chamber cap down onto the chamber until it is properly seated.

X1.4.12 Open valve N and continue filling the chamber with de-aired water until water flows out of the hole left by removal of relief valve A. Close valve N.

X1.4.13 Insert a thermocouple or thermometer to about midheight in the chamber through the hole left by removal of valve A.

X1.4.14 Using modeling clay or silicon sealant, seal the opening between the thermocouple or thermometer and the hole in the cap.

X1.4.15 Open valve N and continue filling the chamber until water flows out the top of the ball bushing. Close valve N. Disconnect the de-aired water source line from valve N. Reattach the drain line to valve N.

X1.4.16 Screw the chamber bolts into the chamber bottom plate; set the chamber cap hold down plate into place.

X1.4.17 Secure the chamber cap to the chamber bottom plate by screwing the four nuts onto the four chamber bolts; tighten the nuts in a staggered sequence to about 50 ft-lbf torque.

X1.4.18 Tape a 0.5-inch diameter by 3-inch-long wooden dowel to the side of the piston nearest the piston retainer bar. Since there is not a specimen inside the chamber, the dowel keeps piston intrusion at about the same level it would be when a specimen is in the chamber.

X1.4.19 Lightly grease the piston. Open valve E. Carefully push the piston through the ball bushing in the chamber cap until the wooden dowel comes in contact with the top of the chamber cap. If the water displaced by the piston overtops the volume tube, drain the excess water by opening valve N. Close valve N.

X1.4.20 Open valves L and K to the differential pressure transducer.

X1.4.21 Attach and secure the piston retainer.

X1.4.22 Open volume tube drain valve E. Slowly open valve N to allow water to drain from the volume tube. When the level of water in the volume tube has reached the desired level for starting the test—usually the 10-inch level—close valve N.

X1.4.23 Place the triaxial assembly in an environment where an ambient temperature of 60 to 65 °F (16 to 18 °C) can be maintained for 8 to 12 hours.

X1.4.24 When the temperature of the triaxial assembly has stabilized, read and record chamber water temperature and volume tube height. Move the triaxial assembly to an environment where the ambient temperature will cause a water temperature rise of 10 to 15 °F over a period of 6 to 8 hours.

X1.4.25 Read and record water temperature to the nearest 0.1 °F and volume tube height to the nearest 0.01 inch. These readings should be taken at about 1-hour intervals until chamber water temperature stabilizes.

X1.4.26 This constitutes one trial. Repeat subparagraphs X1.4.23 through X1.4.25 if additional trials are required.

X1.4.27 Compute the temperature correction coefficient for each trial. Determine the average system temperature correction coefficient if required.

X1.5 Calculations

X1.5.1 Perform all calculations on the "Temperature Correction Coefficient" form as shown on figure X1.1.

7-2368 (10-86)
Bureau of Reclamation

TEMPERATURE CORRECTION COEFFICIENT-DATA SHEET

Designation USBR _____

PROJECT	FEATURE
Example	Example

TESTED BY	DATE	COMPUTED BY	DATE	CHECKED BY	DATE

Triaxial Assembly No. 29

(a) Volume tube factor, VT_f 0.110 ☒ in^3/in ☐ cm^3/cm

*Subscript 1 denotes initial reading
Subscript i denotes any subsequent reading

	DATE	TIME	Volume tube reading	Volume tube change $(3_i)-(3_1)$*	Converted Volume tube change (4)x(a)	Temperature	Temperature change
			in ☒ cm ☐	in ☒ cm ☐	in^3 ☒ cm^3 ☐	F° ☒ C° ☐	F° ☒ C° ☐
	(1)	(2)	(3)	(4)	(5)	(6)	(7)
1	9/16	6:34	10.00	—	0.00	66.2	0.0
2		7:30	9.84	0.16	0.018	67.8	1.6
3		8:50	9.51	0.49	0.054	70.7	4.5
4		9:30	9.45	0.55	0.061	71.6	5.4
5		10:30	9.23	0.77	0.085	73.2	7.0
6		11:38	9.09	0.91	0.100	75.0	8.8
7		12:35	9.05	0.95	0.105	75.7	9.5
8		13:30	8.91	1.09	0.120	76.6	10.4
9							
10							
11							
12							
13							
14							
15							
16							
17							
18							
19							
20							

REMARKS: System designed for 2x5 inch specimens. No endplates or specimen in chamber during this test. One trial only.

GPO 852 - 186

Figure X1.1. – Temperature correction coefficient—data sheet — example.

X1.5.2 *Volume Tube Factor, VT_f.*–Enter the volume tube factor in the space provided on figure X1.1.

X1.5.3 *Data Record.*–As readings are observed, record the following data: date (col. 1), time (col. 2), volume tube reading (col. 3), and temperature (col. 6).

X1.5.4 *Volume Tube Change* (col. 4).– The change in fluid level (col. 4) in the volume tube is calculated.

$$\Delta VT = VT_1 - VT_i \qquad \text{(X1-1)}$$

where:
ΔVT = volume tube change, in
VT_1 = initial volume tube reading, in
VT_i = subsequent volume tube reading, in

X1.5.5 The volume tube readings are converted (col. 5) from linear to volumetric readings.

$$\Delta VT_n = \Delta VT\ (VT_f) \qquad \text{(X1-2)}$$

where:
ΔVT_n = converted volume tube change, in^3
ΔVT = volume tube change, in
VT_f = volume tube factor, in^3/in

X1.5.6 The change in chamber water temperature (col. 7)is computed.

$$\Delta T = T_1 - T_i \qquad \text{(X1-3)}$$

where:
ΔT = temperature change, °F
T_1 = initial stabilized water temperature reading, °F
T_i = subsequent temperature water reading, °F

X1.5.7 The temperature correction coefficient is a constant which relates chamber water temperature change to system volume change and may be expressed as:

$$T_f = \frac{\Delta VT_n}{\Delta T} \qquad \text{(X1-4)}$$

where T_f equals temperature correction coefficient, in^3/°F. The temperature correction coefficient is the slope of the straight line relating ΔVT_n to ΔT and is assumed to pass through the origin. The line may be established from a visual best-fit straight line through the data points as shown on figure X1.2 or it may be determined using linear regression analyses. If three trials are performed, an average coefficient for the triaxial shear test system should be determined using all data collected for the individual trials.

NOTE X1.4.–The temperature correction coefficient is usually expressed in terms of cubic inch per degree Fahrenheit. However, it may be expressed in terms of cubic inch per degree Celcius, cubic centimeter per degree Fahrenheit, or cubic centimeter per degree Celcius.

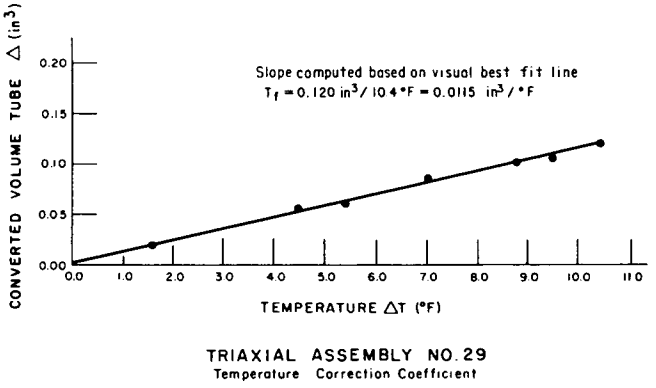

Figure X1.2. – Temperature correction coefficient plot — example.

X2. MEMBRANE CORRECTION

X2.1 Correction for Effect of Specimen Membrane

X2.1.1 The following equation, from ASTM D 1850, may be used to correct compressive soil strength for the effect of the specimen membrane if the error in deviator stress due to strength of the membrane exceeds 5 percent.

$$\Delta(\sigma_1 - \sigma_3) = \frac{4M\epsilon\,(1 - \epsilon)}{D_o} \qquad \text{(X2-1)}$$

where:
$\Delta(\sigma_1 - \sigma_3)$ = the correction to be subtracted from the measured compressive strength, lbf/in^2
D_o = initial diameter of specimen, in
M = compression modulus of the membrane, lbf/in
ϵ = specimen axial strain, expressed as a decimal

X2.2 Compression Modulus of the Membrane, *M*

X2.2.1 The compression modulus of the membrane may be determined by hanging a 0.5-inch length of membrane over a thin rod, placing another rod along the bottom of the hanging membrane and measuring the force per unit strain by stretching the membrane. In tests of very soft soils, the membrane effect may be significant; however, for most soils the membrane correction is insignificant and can be ignored.

UNITED STATES DEPARTMENT OF THE INTERIOR
BUREAU OF RECLAMATION

USBR 5765-89

PROCEDURE FOR

PERFORMING LABORATORY VANE SHEAR TESTING OF SOILS

INTRODUCTION

This procedure is under the jurisdiction of the Geotechnical Services Branch, code D-3760, Research and Laboratory Services Division, Denver Office, Denver, Colorado. The procedure is issued under the fixed designation USBR 5765. The number immediately following the designation indicates the year of acceptance or the year of last revision.

1. Scope

1.1 This designation outlines the procedure for performing laboratory vane shear testing of soils using a vane shear device adapted with an electrical torque transducer and an appropriate readout system for determining undrained shear strength of soil.

NOTE 1.–Laboratory vane shear devices are manufactured that incorporate a series of calibrated torque springs in lieu of the electrical torque transducer specified in this designation. If torque springs are used, calibration of the vane shear device must be performed in accordance to the manufacturer specifications. Data obtained from a laboratory vane shear test performed using a calibrated torque spring would include measurement of vane rotation along with rotation of the spring mounting which are used to determine spring deflection. Spring deflection is used to calculate the torque applied [1].[1] Torque transducer measurement is related directly to vane rotation because the electrical torque transducer shaft is physically attached to the vane. The data sheets presented in this designation reflect the direct vane rotation measurement capabilities using an electrical torque transducer. These data sheets should not be used without appropriate modifications for calibrated torque spring applications (see note 2).

1.2 It is recommended that the laboratory vane shear test be conducted in fine-grained soils having an undrained shear strength less than 1.0 ton/ft² (96 kN/m²). Vane shear test failure surfaces in higher strength fine-grained soils may deviate from the assumed cylindrical failure surface and cause inconsistencies in the measured undrained shear strength.

2. Auxiliary Tests

2.1 The soil samples used in laboratory vane shear testing generally are undisturbed block or tube type samples that have been obtained in accordance with USBR 7100 or 7105, respectively. Tube-type samples are processed in accordance with USBR 5200.

[1] Number in brackets refers to the reference.

3. Applicable Documents

3.1 *USBR Procedures*:
USBR 3900 Standard Definitions of Terms and Symbols Relating to Soil Mechanics
USBR 5200 Processing Tube-Type Samples
USBR 7100 Obtaining Undisturbed Block Samples by the Hand and Chain Saw Methods
USBR 7105 Performing Undisturbed Soil Sampling by Mechanical Drilling Methods

4. Summary of Method

4.1 A four-bladed vane is pushed into a soil sample. The torque required to cause a cylindrical surface of the soil to be sheared by the vane is measured. This torque is converted to a unit shearing resistance of the cylindrical surface. Measurement of torque is accomplished using an electrical torque transducer which is attached directly to the vane shaft.

5. Significance and Use

5.1 The laboratory vane shear test is used for evaluation of undrained shear strength of saturated cohesive soils. It can be performed on tube-type or block samples.

5.2 Correlation of laboratory vane shear test results with those obtained from unconfined compression and triaxial shear tests is generally favorable. This is particularly true of saturated clays having undrained shear strengths below 1 ton/ft² (96 kN/m²).

5.3 The laboratory vane shear test should be used as an aid in evaluating undrained shear strength characteristics of soil rather than as a replacement for conventional shear strength measuring techniques.

6. Terminology

6.1 Definitions are in accordance with USBR 3900. A term of particular significance is:

6.1.1 *Shear Strength.*–The maximum resistance of a soil or rock to shearing stresses (ASTM definition).

7. Interferences

7.1 The laboratory vane shear test is designed for use on saturated, fine-grained cohesive soils. The presence of coarse sand or gravel in test specimens could result in erroneous values of undrained shear strength of soil. If the test specimen contains coarse-grained material, laboratory vane shear testing should not be performed and other shear strength measuring techniques should be employed.

7.2 Since undrained shear strength measured using the vane can be greatly influenced by the rate at which shear occurs, it is recommended that torque be applied using a motorized device. A handcrank manual device can be used, but is not recommended due to potential variation in rate of shear. Rotation rate of the device must be such that drainage is not permitted during shear.

NOTE 2.–A fundamental difference exists in torque application between laboratory vane shear tests made using an apparatus with a calibrated torque spring versus an electrical torque transducer. An electrical torque transducer produces a strain-controlled torque to the vane, whereas a calibrated torque spring produces torque to the vane that varies between stress-controlled and strain-controlled conditions. Using an electrical torque transducer, the constant rate of rotation applied to the top of the torque transducer is transmitted directly to the vane. The resulting strain-controlled torque could result in a higher rate of shear than that produced using a calibrated torque spring.

8. Apparatus

8.1 *Laboratory Vane Shear Device.*–A laboratory vane shear device (fig. 1) consisting of an electrical torque transducer and torque spring replacement spacer (fig. 1a) to apply torque to the vane, for measuring undrained shear strength of soil. The laboratory vane shear device should preferably be motorized and should rotate the vane at a constant rate such that drainage during shear is not permitted. The device is to have an indicator or reading system so that rotation of the electrical torque transducer (i.e. vane blade rotation) can be determined. The electrical torque transducer should produce a repeatable linear relationship between transducer output (mV) and torque applied (in·lbf).

8.2 *Vane.*–A four-bladed vane as shown on figure 2. A vane having a height twice the diameter (2:1) is most often used; although, vanes with varying height to diameter ratios can also be used to accommodate soils of different shear strength.

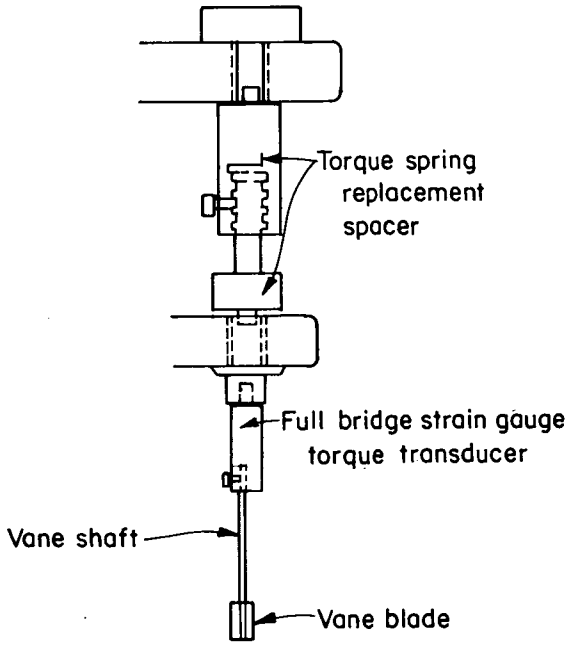

(a) Electrical torque transducer.

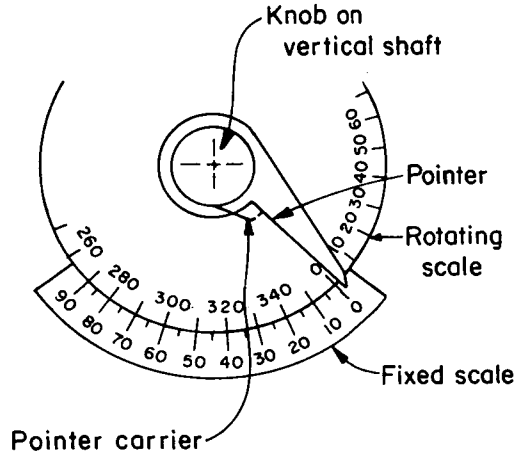

(b) Scales on laboratory vane shear device.

Figure 1. – Laboratory vane shear device.

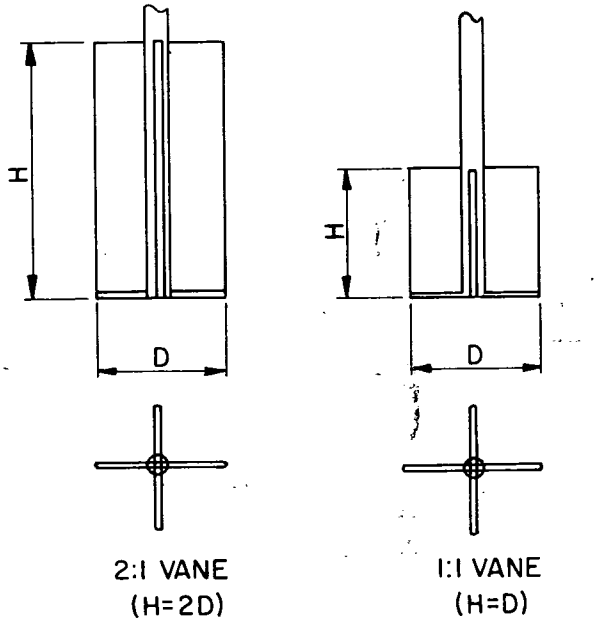

Figure 2. – Rectangular four-bladed vane.

8.3 *Wax.*–Paraffin type, used to secure the tube or block sample to a suitable testing stand or table for testing.

8.4 *Brush.*–Paintbrush, about 5 inches (130 mm) wide, used for applying the wax to secure the test specimen.

8.5 *Calibration Wheel.*–A wheel which is attached to the laboratory vane shear device during calibration and is used to support the calibration masses. A schematic of a calibration wheel is shown on figure 3a .

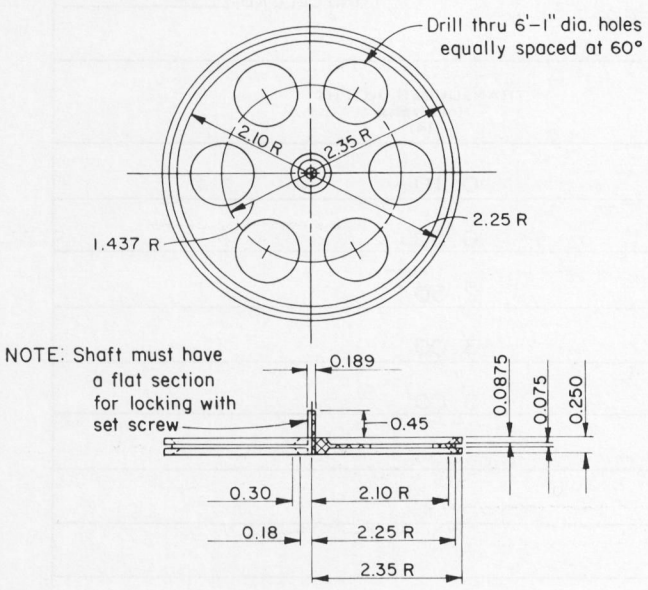

(a) Schematic of calibration wheel.

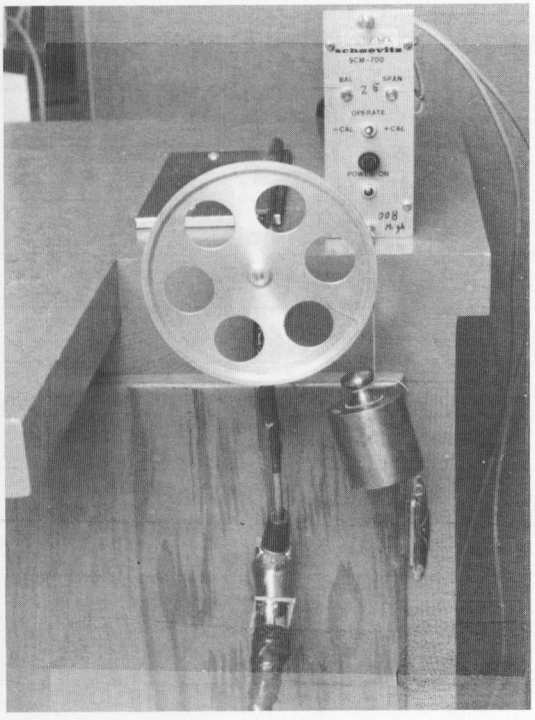

(b) Calibration assembly.

Figure 3. – Calibration of an electrical torque transducer vane shear device.

8.6 *Calibration Masses.*–Sets of masses which are used to apply torque to the laboratory vane through an electrical torque transducer.

9. Precautions

9.1 *Safety Precautions.*–Handle the vane shear apparatus carefully to avoid possible injury resulting from the sharp edges of the vanes.

9.2 *Technical Precautions*:

9.2.1 Do not attempt to test materials that contain coarse sand or gravel (see subpar. 7.1).

9.2.2 Store the vanes in a suitable case when not in use to avoid damage.

10. Sampling, Test Specimens, and Test Units

10.1 Samples are obtained in accordance with USBR 7105 and generally processed in accordance with USBR 5200 prior to performing this procedure.

11. Calibration and Standardization

11.1 *Torque Transducer Calibration*:

11.1.1 All data are to be recorded on the "Laboratory Vane Shear Calibration" form as shown on figure 4.

11.1.2 Attach the torque transducer to the vane shaft, as outlined in the manufacturer's specifications. Insert the torque spring replacement spacer in the apparatus.

11.1.3 Connect the torque transducer leads to an appropriate signal conditioner, and connect the signal conditioner to a readout system (generally a voltmeter or computer).

11.1.4 Secure the laboratory vane shear apparatus/ torque transducer assembly to the edge of a suitable table or bench as shown on figure 3b.

11.1.5 Insert and secure the calibration wheel in the vane shaft hole of the transducer using an appropriate size set screw.

11.1.6 Attach the cord onto the calibration wheel.

11.1.7 Zero the output signal from the torque transducer on the readout system.

11.1.8 Hang the smallest calibration mass from the cord as shown on figure 3b.

11.1.9 Reposition the calibration wheel, if necessary, until the cord is hanging vertically and tangent to the wheel. Remove the mass from the cord.

11.1.10 Calculate the maximum torque that can be applied to the torque transducer.

11.1.11 Calculate the mass required to apply the desired torque to the transducer for each torque increment.

NOTE 3.–It is recommended that calibration data be obtained at a minimum of four increments over the full range of the torque transducer to ensure accurate calibration.

11.1.12 Hang sufficient mass onto the cord of the calibration wheel to obtain the desired torque.

11.1.13 Read and record the mass to the nearest 0.001 lbm and the voltage output to the nearest 0.01 mV. Remove the mass from the cord.

7-2382 (12-86) Bureau of Reclamation	LABORATORY VANE SHEAR CALIBRATION	Designation USBR 5765-89
MANUFACTURER Example	MODEL NO. Example	SERIAL NO. 1
CALIBRATION PERFORMED BY DATE	COMPUTED BY DATE	CHECKED BY DATE

RADIUS OF CALIBRATION WHEEL (1) 2.25 in LOAD CELL NO. 3

CALIBRATION MASS USED (lbm) (2)	TORQUE* (in-lbf) T=(1)x(2)= (3)	TRANSDUCER OUTPUT (millivolts) (4)
0.004 (2g)	0.01	0.10
0.022 (10g)	0.05	0.50
0.110 (50g)	0.25	2.50
0.132 (60g)	0.30	3.00
0.220 (100g)	0.50	5.00

*IMPLIES 1 lbm = 1 lbf

GPO 852 - 547

Figure 4. - Laboratory vane shear calibration — example.

11.1.14 Repeat subparagraphs 11.1.12 and 11.1.13 for the full torque range.

11.1.15 Calculate and record to the nearest 0.01 in·lbf the torque applied by each mass and prepare a plot of transducer output versus torque as shown on figure 5 and calculate the slope of the line using a linear regression analysis.

11.1.16 Verify calibration of the torque transducer for each testing program.

12. Conditioning

12.1 Vane shear testing should be performed as quickly as possible after specimen preparation to avoid unrecorded moisture loss from the test specimen.

13. Procedure

13.1 All data are to be recorded on the "Laboratory Vane Shear Test" form as shown on figure 6.

13.2 Secure the laboratory vane shear apparatus to a suitable table or bench.

13.3 Select a vane and torque transducer appropriate for the material being tested. As a guideline, use smaller vanes for firm or stiff soils and larger vanes for softer soils. Several trials may be necessary to determine the correct vane size and torque transducer combination. Too small a vane will produce rotations of insufficient magnitude, while too large a vane may produce torque in excess of the capacity of the torque transducer. Regardless of vane size, the torque transducer is to be carefully monitored to avoid overstressing the system.

13.4 Place the selected torque transducer and torque spring replacement spacer in the vane shear apparatus in accordance with manufacturer specifications.

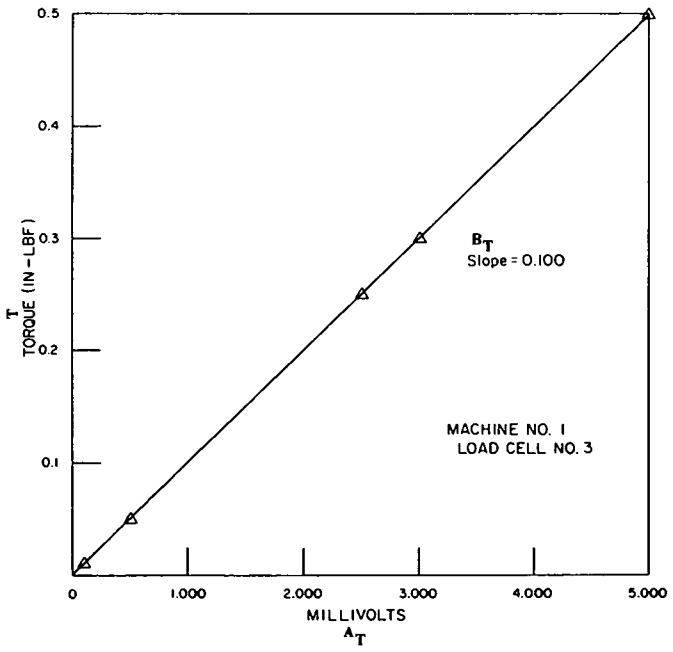

Figure 5. - Torque transducer calibration plot — example.

13.5 Secure the selected vane into the vane shaft of the torque transducer using an appropriate size set screw.

13.6 Securely wax the specimen to a suitable moveable platform and position the specimen directly under the vane as shown on figure 7.

13.7 Select a flat area on the specimen where the vane shear test is to be performed; reposition the specimen, if necessary.

13.8 Rotate the pointer carrier on the vertical shaft (fig. 1b) until the pointer is brought to zero on both the rotating and fixed scales.

13.9 Manually lower the vane into the soil until the depth of soil over the top of the vane is about 1/2 inch. This is to ensure that shearing takes place along the horizontal planes of the vane (cylindrical surface) without movement of the soil sample surface.

13.10 Attach the belt from the drive motor to the vane drive system and turn the vane shear apparatus on.

13.11 Read and record degrees of vane rotation on the fixed scale (to the nearest 1 degree) and transducer output (to the nearest 0.01 millivolts) for every 5-degree rotation of the vane. The rotating scale is not used with the torque transducer.

13.12 Continue taking degrees of vane rotation and transducer output readings until failure occurs which is defined as (1) the point at which the transducer voltage output decreases, or (2) the maximum transducer voltage output is reached.

NOTE 4.-While the soil is resisting torque applied to the vane, the transducer voltage output increases steadily until the maximum shear resistance of the soil is mobilized. At this point, failure occurs and the voltage output decreases. The angle of vane rotation continues to increase throughout the test.

13.13 Read and record five additional transducer output readings after failure occurs.

13.14 If the maximum voltage output of the transducer is reached before failure occurs, stop the test and repeat subparagraphs 13.7 through 13.13 using a smaller vane.

13.15 After failure has occurred and the five additional readings after failure have been obtained, turn the vane shear apparatus off; remove the belt and manually rotate the vane one full revolution from the original starting point; i.e. forward to 0-degree point.

13.16 After the manual rotation is complete, reattach the belt; verify that the pointer is at 0-degree on the fixed (outer) scale, and wait about 1 minute before continuing the test.

13.17 Turn the vane shear apparatus on; read and record degrees of vane rotation and the transducer output (millivolts) for every 5-degree of rotation of the vane, as described in subparagraph 13.11

13.18 Continue taking readings until failure again occurs (torque decreases) or until the transducer voltage output readings remain approximately constant.

13.19 Turn the vane shear apparatus off, remove the belt, and manually rotate the vane the remaining distance to complete two revolutions from the original 0-degree vane rotation point.

7-2383 (12-86) Bureau of Reclamation	LABORATORY VANE SHEAR TEST	Designation USBR 5765-89

SAMPLE NO.	PROJECT	FEATURE
62M-28	Example	Example

SPECIMEN NO.	HOLE NO.	DEPTH
2	417	15.0-17.5 ft.

TESTED BY	DATE	COMPUTED BY	DATE	CHECKED BY	DATE

VANE DIAMETER (D) 0.50 in VANE HEIGHT (H) 0.75 in $V^* = 3.14\ D^2\ (H/2 + D/6) =$ 0.360 in^3

TRANSDUCER NO. 1 CALIBRATED SLOPE (1) 0.100 (in-lbf)/mV

DEGREES OF ROTATION (Torque Transducer)	TRANSDUCER OUTPUT (millivolts) (2)	TORQUE T = (1)x(2) in-lbf	SHEAR RESISTANCE $S = \frac{T}{V^*}$ lbf/in^2
1st. Rotation			
0	0.00	0.00	0.00
5	19.42	1.942	5.39
10	25.24	2.524	7.01
15	28.96	2.896	8.04
20	27.89	2.789	7.75
25	26.84	2.684	7.46
30	26.66	2.666	7.41
35	26.06	2.606	7.24
40	25.39	2.539	7.05
2nd. Rotation			
0	0.00	0.00	0.00
5	3.26	0.326	0.91
10	3.10	0.310	0.86
15	2.96	0.296	0.82
20	2.91	0.291	0.81
25	2.93	0.293	0.81
30	2.94	0.294	0.82
35	2.92	0.292	0.81
40	2.97	0.297	0.83
3rd. Rotation			
0	0.00	0.00	0.00
5	0.51	0.051	0.14
10	0.36	0.036	0.10
15	0.41	0.041	0.11
20	0.40	0.040	0.11
25	0.31	0.031	0.09
30	0.40	0.040	0.11

GPO 852 - 548

Figure 6. – Laboratory vane shear test — example.

13.20 Repeat subparagraphs 13.16 through 13.18.

13.21 Shear strength after 3 or more revolutions is sometimes desired. If this is requested repeat subparagraphs 13.16 through 13.18.

13.22 Turn the vane shear apparatus off; carefully remove the vane from the soil and repeat subparagraphs 13.11 through 13.20 at a minimum of three different locations on the specimen. These tests should be spaced a minimum of 30 mm apart as shown on figure 8.

13.23 If a soil moisture content and/or a dry unit weight are to be obtained, the specimen should be rewaxed and properly stored for further testing.

13.24 Calculate and record the torque applied and the equivalent undrained shear strength at each increment of vane rotation recorded.

13.25 Prepare a plot of degrees of vane rotation versus equivalent undrained shear strength as shown on figure 9.

14. Calculations

14.1 Determine the torque applied at each increment of vane rotation.

$$T = A_T B_T \qquad (1)$$

where:

T = torque, in·lbf
A_T = transducer output, mV
B_T = slope of torque transducer calibration line, in·lbf/mV (value determined by linear regression analysis, (fig. 5))

14.2 Calculate the equivalent undrained shear strength at each increment of vane rotation.

$$S = \frac{T}{V^*} \qquad (2)$$

where:

S = equivalent undrained shear strength, lbf/in^2
T = applied torque, in·lbf
V^* = vane factor = $\pi D^2 (H/2 + D/6)$, in^3
π = 3.14
H = vane height, in
D = vane diameter, in

*See reference [1] for a complete derivation of all constants given.

15. Report

15.1 The report is to consist of the completed and checked:

"Laboratory Vane Shear Test" form (fig. 6).

"Vane Shear Test Plot" (fig. 9).

15.2 All calculations are to show a checkmark and all plotting must be checked.

16. Reference

[1] Head, K. H., *Manual of Soil Laboratory Testing*, Engineering Laboratory Equipment Limited, Halston Press, vol. 2, pp. 534-538 and 572-580, 1982.

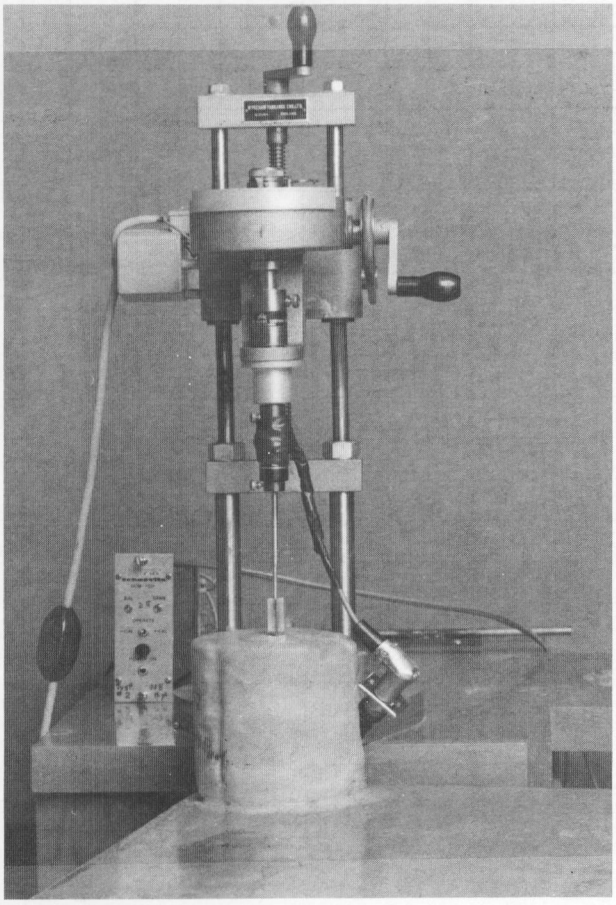

Figure 7. – Test specimen in place under vane shear device.

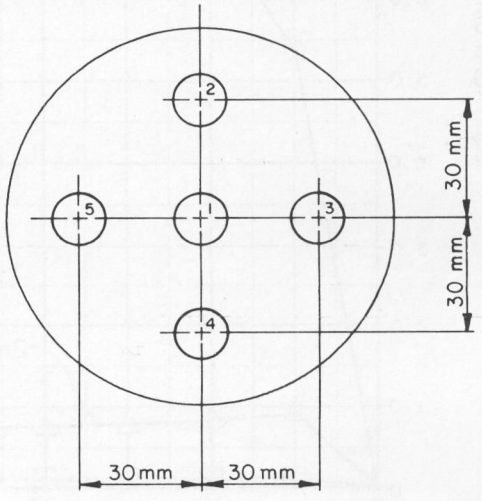

Figure 8. – Minimum spacing requirements for vane shear testing — minimum of three test locations required.

7-2384 (12-86) Bureau of Reclamation	VANE SHEAR TEST PLOT	Designation USBR 5765-89
SAMPLE NO. G2M-28	PROJECT Example	FEATURE Example
VANE SIZE 0.50 Dia./0.75 Height	HOLE NO. 417	DEPTH 15.0-17.5 ft.
TESTED BY DATE	COMPUTED BY DATE	CHECKED BY DATE

UNDISTURBED	8.04	lbf/in^2	55.4	kPa
REMOLDED	0.91	lbf/in^2	6.27	kPa
REMOLDED	0.14	lbf/in^2	0.97	kPa

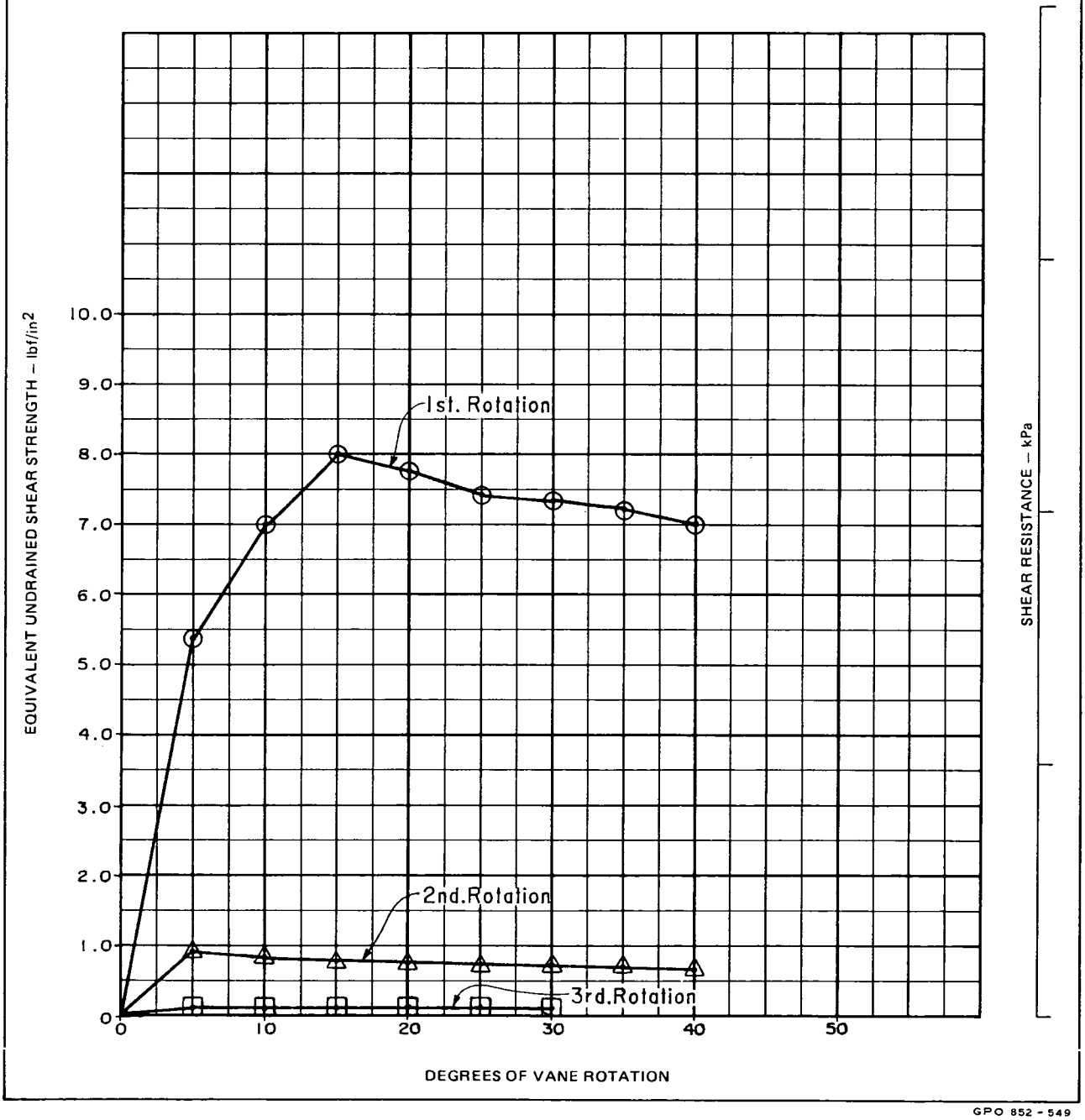

GPO 852 - 549

Figure 9. – Vane shear test plot — example.

UNITED STATES DEPARTMENT OF THE INTERIOR
BUREAU OF RECLAMATION

USBR 5770-89

PROCEDURE FOR

PERFORMING TORVANE (POCKET VANE SHEAR METER) TESTING OF SOILS

INTRODUCTION

This procedure is under the jurisdiction of the Geotechnical Services Branch, code D-3760, Research and Laboratory Services Division, Denver Office, Denver, Colorado. The procedure is issued under the fixed designation USBR 5770. The number immediately following the designation indicates the year of acceptance or the year of the last revision.

1. Scope

1.1 This designation outlines the procedure for rapid determination of undrained shear strength of cohesive soils, either in the field or in the laboratory using a Torvane.[1]

1.2 This procedure should be used only on saturated cohesive soils whose undrained shear strength is independent of normal pressure. Correlation of Torvane test results and the results obtained from unconfined compression and triaxial shear tests is generally favorable for certain soil types such as saturated clays having shear strength below 1 ton per square foot.

1.3 Torvane data also can be used to assist in visual classification of a homogeneous soil

2. Auxiliary Tests

2.1 The Torvane (fig. 1) used in this procedure must be calibrated in accordance with USBR 1445 prior to performing this procedure.

3. Applicable Documents

3.1 *USBR Procedures*:
USBR 1445 Calibrating the Torvane Shear Device (Pocket Vane Shear Meter)
USBR 3900 Standard Definition of Terms and Symbols Relating to Soil Mechanics

4. Summary of Method

4.1 A flat surface is selected on a sample of undisturbed cohesive soil. The Torvane is pressed carefully into the cohesive soil to the depth of the vane blades. The knob of the Torvane is rotated slowly at a constant rate so that failure of the sample occurs in 5 to 10 seconds. As sample failure occurs, the maximum Torvane dial reading is noted and the undrained shear strength is determined.

5. Significance and Use

5.1 The Torvane is used for rapid evaluation of undrained shear strength of saturated cohesive soils. It can be used on tube-type samples (fig. 2), block samples, and/or sides of test pits. The Torvane has been used to assist in planning laboratory investigations.

5.2 It is recommended that the Torvane be used as an aid in evaluating undrained shear strength characteristics of soils rather than as a replacement for conventional shear strength measuring techniques.

6. Terminology

6.1 All definitions are in accordance with USBR 3900. A term of particular significance is:

6.1.1 *Shear Strength.*–The maximum resistance of a soil or rock to shearing stresses (ASTM definition).

7. Interference

7.1 The Torvane is designed for use on saturated, fine-grained cohesive soils. The presence of coarse sand or gravel in test specimens could result in erroneous values of undrained shear strength of soil. If the test specimen contains coarse-grained material, the Torvane should not be used and other shear strength measuring techniques should be performed.

8. Apparatus

8.1 *Torvane Device.*–The small vane shear meter (fig. 1) is capable of measuring shear strengths between 0 and 2.5 ton/ft^2. The Torvane dial should be marked with major divison in units of 0.05 ton/ft^2 to permit visual interpolations to the nearest 0.01 ton/ft^2.

NOTE 1.–Table 1 should be used as a guide for selecting the appropriate vane adapter.

Table 1.–Torvane adapters.

Undrained shear strength ton/ft^2	Adapter diameter in	Vane height in
0 to 0.2	1.875	0.210
1.0 to 2.5	0.75	0.135

[1] Torvane (hand held vane shear testing device), Slope Indicator Co., PO Box C-30316, Seattle, Washington.

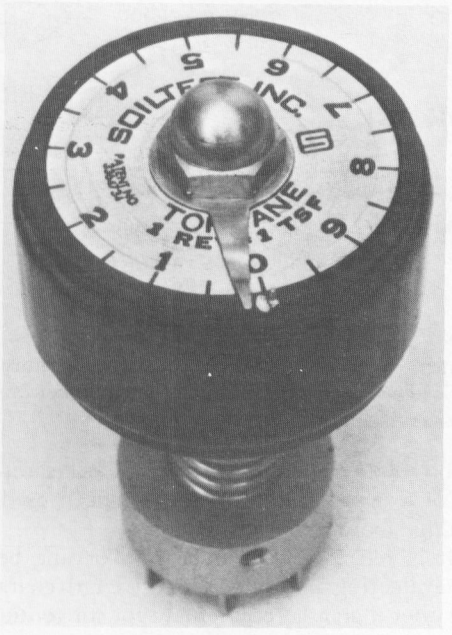

(a) Top view.

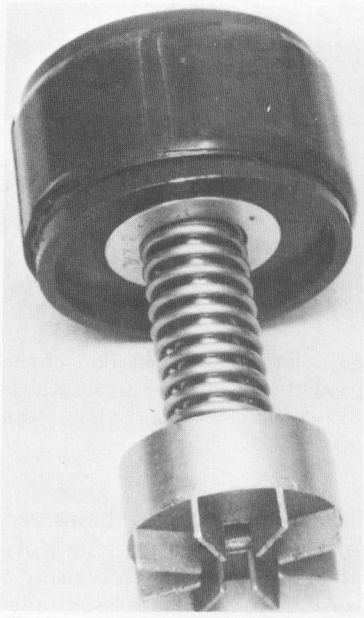

(b) Side view. Note vane at bottom.

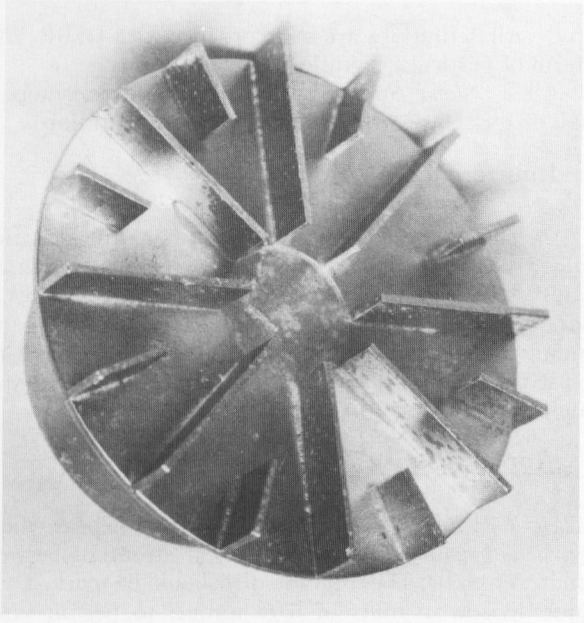

(c) Adaptor: 0 to 0.2 ton/ft^2.

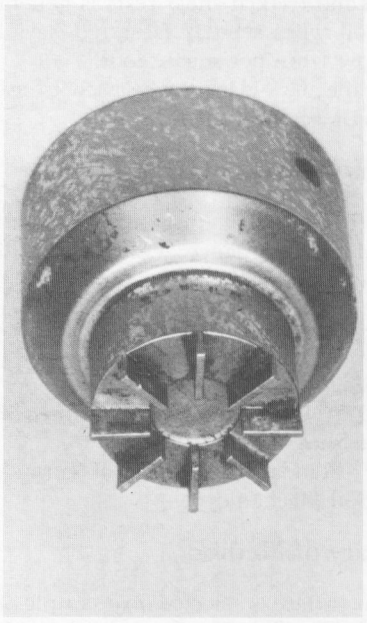

(d) Adaptor: 0 to 2.5 ton/ft^2.

Figure 1. - Torvane — pocket vane shear meter.

9. Precautions

9.1 *Safety Precautions*:

9.1.1. Handle the Torvane carefully to avoid possible injury resulting from the sharp edges of the vanes.

9.2 *Technical Precautions*:

9.2.1 Do not attempt to test materials that contain coarse sand or gravel (see subpar. 7.1).

9.2.2 Store the Torvane and spare vanes in a suitable case when not in use to avoid damage to the meter and/or vanes.

10. Calibration and Standardization

10.1 Verify that the Torvane is currently calibrated in accordance with USBR 1445. If the calibration is not

Figure 2. – Torvane used on the end of a tube-type sample.

current, perform the calibration before using the Torvane for this procedure.

11. Conditioning

11.1 Special conditioning requirements are not needed for this procedure.

12. Procedure

12.1 All data are to be recorded on the "Torvane (Pocket Vane Shear Meter) Data Sheet" as shown on figure 3.

12.2 Select a flat area on the side of a test pit or at the end or on the side of a laboratory sample (fig. 2) where the Torvane test is to be performed.

12.3 Select a vane size appropriate for the material being tested. Several trials may be necessary to determine the correct vane size. Too small a vane will produce dial readings of insufficient magnitude to register on the dial head, while a larger vane will produce readings too large for the scale.

12.4 Rotate the pointer counterclockwise to zero.

12.5 Carefully press the vane into the cohesive soil to the depth of the vane blades.

12.6 Maintain a constant normal load on the meter by finger pressure against the Torvane knob.

12.7 Slowly turn the knob of the meter clockwise at a constant rate to provide torque on the vane. A rate of rotation such that failure occurs in 5 to 10 seconds is recommended.

12.8 After failure occurs, read and record the Torvane dial head reading indicated by the pointer.

12.9 Return the pointer to zero.

12.10 Perform subparagraphs 12.2 through 12.9 two more times by moving the Torvane to an undisturbed area in the same general location for each successive test.

12.11 Calculate the average Torvane reading for each location.

12.12 Calculate the average Torvane undrained shear strength for each location.

12.13 Obtain the Torvane correction curve as prepared in accordance with USBR 1445.

12.14 Use the average Torvane undrained shear strength value as calculated in subparagraph 12.12, and the correction curve, if necessary, to determine the corrected average equivalent undrained shear strength of the soil.

12.15 If correction is not necesary, the average Torvane undrained shear strength value obtained in subparagraph 12.12 is recorded directly as the equivalent undrained shear strength of the soil.

13. Calculations

13.1 Calculate the average Torvane reading.

$$(4) = \frac{(1) + (2) + (3)}{3} \qquad (1)$$

where:

(4) = average Torvane reading
(1), (2), (3) = Torvane readings

13.2 Calculate the average Torvane undrained shear strength.

$$(5) = (4)\,F \qquad (2)$$

where:

(5) = average Torvane undrained shear strength, ton/ft²
(4) = average Torvane reading
F = Torvane vane factor, table 2

Table 2.–Torvane vane factors.

Undrained shear strength ton/ft²	Vane diameter in	Vane factor F
0 to 2.5	0.75	2.5
0 to 1.0	1.00	1.0
0 to 0.2	1.90	0.2

14. Report

14.1 The report is to consist of a completed and checked "Torvane (Pocket Vane Shear Meter) Data Sheet" (fig. 3).

14.2 All calculations are to show a checkmark.

7-2329 (11-85) Bureau of Reclamation	TORVANE (POCKET VANE SHEAR METER) DATA SHEET	Designation USBR 5770 - 89
Project: Example	Feature: Example	
Tested by / Date	Checked by / Date	
Manufacturer: Example	Torvane serial No.: P-5340	

Sample No. 1 — Trial No. (1) (2) (3)

Diameter of vane 0.75 (in)

	(1)	(2)	(3)
Torvane reading	0.84	0.88	0.94
(4) Average Torvane reading	0.89		
(5) Average Torvane undrained shear strength	(4)x(F)* = 2.2 (ton/ft²)		
(6) Corrected average Torvane undrained shear strength (USBR 1445)	☐ None required ⇒ 2.2 (ton/ft²)		

Sample No. 2 — Trial No. (1) (2) (3)

Diameter of vane 1.00 (in)

	(1)	(2)	(3)
Torvane reading	0.60	0.65	0.50
(4) Average Torvane reading	0.58		
(5) Average Torvane undrained shear strength	(4)x(F)* = 0.58 (ton/ft²)		
(6) Corrected average Torvane undrained shear strength (USBR 1445)	☒ 0.63 (ton/ft²)		

Sample No. 3 — Trial No. (1) (2) (3)

Diameter of vane 1.90 (in)

	(1)	(2)	(3)
Torvane reading	0.15	0.20	0.10
(4) Average Torvane reading	0.15		
(5) Average Torvane undrained shear strength	(4)x(F)* = 0.03 (ton/ft²)		
(6) Corrected average Torvane undrained shear strength (USBR 1445)	☒ 0.05 (ton/ft²)		

* 0.75 inch diameter vane (0 - 2.5 tons/ft²) F = 2.5
1.00 inch diameter vane (0 - 1.0 tons/ft²) F = 1.0
1.90 inch diameter vane (0 - 0.2 tons/ft²) F = 0.2

Auxiliary Test: USBR 1445 - 89

Remarks

GPO 849-229

Figure 3. - Torvane (pocket vane shear meter) data sheet — example.

UNITED STATES DEPARTMENT OF THE INTERIOR
BUREAU OF RECLAMATION

USBR 5800-89

PROCEDURE FOR

PERFORMING LABORATORY COMPACTION OF SOIL-CEMENT MIXTURES

INTRODUCTION

This procedure is under the jurisdiction of the Geotechnical Services Branch, Code D-3760, Research and Laboratory Services Division, Denver Office, Denver, Colorado. The procedure is issued under the fixed designation USBR 5800. The number immediately following the designation indicates the year of acceptance or the year of last revision.

This procedure is similar to ASTM D 558, except that this procedure contains a rewritten and more detailed description and includes USBR data forms.

1. Scope

1.1 This designation outlines the procedure for performing laboratory compaction of soil-cement mixtures.

1.2 This procedure is performed to determine the relationship between the moisture content and the dry unit weight of soil-cement when compacted with a given compactive effort. A compaction curve is plotted from which the optimum moisture content and maximum dry unit weight can be determined.

1.3 This procedure is typically performed using a mechanical compactor that has been calibrated to produce the same effect as a manual compactor using a 5.5-lbm rammer and an 18-inch drop.

1.4 This procedure is limited to soil particles passing the No. 4 sieve.

1.5 This procedure is identical to USBR 5500 except for requirements and information related to cement and soil-cement mixtures.

1.6 USBR 5500 differs from method A of ASTM D 698. USBR 5500 uses a 1/20-ft^3 compaction mold and is based on a manual rammer drop of 18 inches. ASTM D 698 uses a 1/30-ft^3 compaction mold and is based on a manual rammer drop of 12 inches. Both methods, however, impart the same compactive effort of 12,375 ft·lbf/ft^3 to the soil specimen.

2. Auxiliary Tests

2.1 A test sample must be obtained in accordance with USBR 5205 prior to performing this procedure.

2.2 Moisture content must be determined in accordance with USBR 5300 as part of performing the procedure.

3. Applicable Documents

3.1 *USBR Procedures*:

USBR 1009 Calibrating Compaction Molds
USBR 1012 Calibrating Balances or Scales
USBR 1020 Calibrating Ovens
USBR 1025 Checking Sieves
USBR 1415 Calibrating Laboratory Mechanical Compactors
USBR 3900 Standard Definitions of Terms and Symbols Relating to Soil Mechanics
USBR 5205 Preparing Soil Samples by Splitting or Quartering
USBR 5300 Determining Moisture Content of Soil and Rock by the Oven Method
USBR 5500 Performing Laboratory Compaction of Soils — 5.5-lbm Rammer and 18-in Drop
USBR 5805 Preparing Soil-Cement Specimens for Compressive Strength Testing for Mix Designs
USBR 5810 Performing Compressive Strength Testing of Soil-Cement Cylinders
USBR 5815 Preparing Soil-Cement Specimens for Durability Testing
USBR 5820 Performing Wet-Dry Durability Testing of Compacted Soil-Cement Mixtures
USBR 5825 Performing Freeze-Thaw Durability Testing of Compacted Soil-Cement Mixtures

3.2 *ASTM Standards*:

C 150 Specification for Portland Cement
C 595 Specification for Blended Hydraulic Cements
C 558 Moisture-Density Relations of Soil-Cement Mixtures
D 698 Moisture-Density Relations of Soils and Soil-Aggregate Mixtures Using 5.5-Pound (2.49-kg) Rammer and 12-Inch (305-mm) Drop
E 11 Specification for Wire Cloth Sieves

4. Summary of Method

4.1 A minimum of five specimens from the same soil-cement mixture are prepared, each at a different moisture content. Each specimen is compacted in a mold using the same compactive effort. The moisture content and resulting dry unit weight of each specimen are determined, plotted, and a compaction curve constructed. From the compaction curve, the optimum moisture content and the maximum dry unit weight are determined.

5. Significance and Use

5.1 Laboratory tests are conducted on soil-cement mixtures to determine the cement content to be specified in the design of a soil-cement structure. Normally, laboratory compaction tests are performed on soil-cement mixtures using three different cement contents. The cement contents selected for testing are based on past experience with similar materials. The optimum moisture content and laboratory maximum dry unit weight are required for performing USBR 5805 and 5815. Based upon results from laboratory compaction tests, compressive strength specimens are formed at the three different cement contents and tested (USBR 5805 and 5810). Soil-cement mix designs that meet compressive strength requirements are then subjected to wet-dry and freeze-thaw durability tests (USBR 5820 and 5825). An economical mix design uses the minimum cement content that meets both strength and durability requirements.

6. Terminology

6.1 Definitions are in accordance with USBR 3900. Terms of particular significance are:

6.1.1 *Compaction Curve.*–The curve showing the relationship between the dry unit weight and the moisture content of a soil for a given compactive effort (ASTM definition).

6.1.2 *Maximum Unit Weight* (γ_{max}).–The dry unit weight defined by the peak of a compaction curve.

6.1.3 *Optimum Moisture Content* (w_o, %).–The moisture content at which a soil can be compacted to the maximum dry unit weight by a given compactive effort (ASTM).

6.2 Terms not included in USBR 3900 specific to this designation are:

6.2.1 *Compactive Effort.*–The theoretical energy used to compact soil into a known volume, expressed as ft·lbf/ft^3. Compactive effort is computed as the product of the drop height, rammer mass, blows per layer, and number of layers divided by the volume of the mold.

6.2.2 *Cement Content.*–Amount of cement in a soil-cement mixture, specified as a percent of dry soil mass.

7. Interferences

7.1 Variations in rammer drop height, rammer mass, or number of blows per layer will result in erroneous test data because of nonstandard compactive effort. To ensure a given compactive effort, the mechanical compactor must be inspected and calibrated in accordance with USBR 1415.

8. Apparatus

8.1 *General Apparatus*:

8.1.1 *Balance or Scale.*–A typical balance or scale used to determine moisture content must be readable to 0.1 g and have a capacity of about 1000 g.

8.1.2 *Balance or Scale.*–A typical balance or scale used to measure the mass of the compaction specimen must be readable to 0.01 lbm and have a capacity of about 50 lbm.

8.1.3 *Desiccator.*–An enclosed container, with a moisture absorbing chemical compound inside, used for cooling a heated soil sample while maintaining zero change in moisture content due to condensation.

8.1.4 *Dish, Evaporating.*–A suitable dish resistant to corrosion or changes in mass when subjected to repeated heating, cooling, or cleaning.

8.1.5 *Drying Oven.*–An oven, thermostatically controlled, preferably of the forced-draft type, and capable of maintaining a uniform temperature of 230±9 °F (110±5 °C) throughout the drying chamber.

8.1.6 *Graduated Cylinder.*–1000-mL capacity, graduated to 10 mL.

8.1.7 *Sieves.*–U.S.A. Standard series No. 4 (4.75 mm) sieve with stand and a No. 16 (1.18 mm) sieve, conforming to the requirements of ASTM E 11.

8.1.8 *Straightedge.*–A stiff metal straightedge of convenient length. The scraping edge must be beveled if it is thicker than 1/8 inch.

8.2 *Equipment Unique to This Procedure* (See USBR 5500 figs. 1, 2, and 3.)

8.2.1 *Compaction Apparatus.*–A mechanical compaction device with a rammer having an initial mass of 5.5 lbm, an adjustable height of drop of about 12 to 18 inches, and a counter for registering the number of blows. If a mechanical compactor is not available, a manual tamper may be used (see USBR 5500 app. X2). The device includes a 1/20-ft^3 mold with baseplate. The mold assembly must rest firmly on a uniform, rigid foundation, equivalent to a 200 lbm or larger block of concrete.

NOTE 1.–There are several varieties of commercially available molds; the mold may be fabricated. Figure 3 in USBR 5500 is typical. Critical requirements are the tapered design, the inside diameter, and the height.

8.2.2 *Extruder for Compaction Specimen.*–A mechanical device for removing a compacted soil-cement specimen from a compaction mold.

8.2.3 *Moisture-Proof Containers.*–Cylindrical metal or plastic containers, about 6-inch diameter by 12 inches long, using a plastic inner bag for sealing and storing specimens to be tested.

8.3 *Miscellaneous Equipment.*–Brushes, knife, mixing pan, scoop, etc., for mixing, placing, or trimming soil-cement specimens.

9. Reagents and Materials

9.1 Tapwater that is free of acids, alkalies, or oils and is suitable for drinking should be used for wetting the soil prior to compaction.

9.2 Cement is to conform to ASTM C 150 and C 595.

10. Precautions

10.1 *Safety Precautions*:

10.1.1 This procedure may involve hazardous materials, operations, and equipment.

10.1.2 Do not place hands near the top of the mold when the mechanical rammer is operating.

10.1.3 Exercise care to protect hands from the drying and abrasive properties of cement.

10.1.4 Carefully mix the soil and cement using a large pan to avoid forming a cement dust cloud. Wear a protective mask to prevent inhaling cement dust.

10.2 *Technical Precautions.*–To minimize the effect of cement hydration and evaporation, perform the test expeditiously and continuously to completion. Elapsed time between addition of water to the soil-cement mixture and final compaction should not exceed 30 minutes.

11. Sampling, Test Specimens, and Test Units

11.1 *Cement*:

11.1.1 Cement must conform to the provisions of subparagraph 9.2.

11.1.2 Pass the cement through a No. 16 (1.18 mm) sieve and discard all lumps.

11.2 *Soil-Cement Mixtures*:

11.2.1 For each cement content, prepare a test sample of about 50 lbm of minus No. 4 soil in accordance with USBR 5205.

11.2.2 Air dry the test sample if the soil was not air-dried as part of performing USBR 5205.

11.2.3 Split the test sample into six specimens in accordance with USBR 5205. Set aside one of the specimens and keep it at the air-dried moisture content in case an additional specimen is requested.

11.2.4 Add the specified amount of cement to each of the five remaining specimens. Mix the soil and cement thoroughly until uniform throughout.

11.2.5 Prepare the five specimens for compaction by adding increasing amounts of water to each specimen so the moisture content of each succeeding specimen is about 2 percentage points higher than the previous specimen. The moisture contents selected must bracket the optimum moisture content to ensure obtaining an appropriate compaction curve. Some soils having very high optimum moisture contents may require a larger moisture content increment between specimens in order to obtain a well defined compaction curve.

NOTE 2.–Judging the optimum moisture content requires practice and experience. A table of presumptive values may be useful or the optimum moisture content for the soil may be used as a starting point.

11.2.5.1 Thoroughly mix the soil while sprinkling the water onto the soil to ensure an even distribution of moisture throughout the material. Record the amount of water added to each specimen on the "Soil-Cement Laboratory Compaction Test" form as shown on figure 1. Balls of cement may form when water is first added to the soil-cement mixture. Break down the balls of cement in the soil-cement mixture to ensure a homogeneous distribution of cement, water, and soil.

11.2.5.2 On the "Soil-Cement Laboratory Compaction Test" form (fig. 1), note the time when water was added to the soil-cement mixture. Cover and allow to stand for not less than 5 minutes but not more than 10 minutes to aid dispersion and complete absorption of the water.

12. Calibration and Standardization

12.1 Verify that equipment is currently calibrated in accordance with the applicable calibration procedure. If the calibration is not current, perform the calibration before using the equipment for this procedure.

USBR 1009 Calibrating Compaction Molds
USBR 1012 Calibrating Balances or Scales
USBR 1020 Calibrating Ovens
USBR 1025 Checking Sieves
USBR 1415 Calibrating Laboratory Mechanical Compactors

13. Conditioning

13.1 Bring the materials to room temperature [preferably 65 to 75 °F (18 to 14 °C)] before beginning the test.

13.2 Store cement in moisture-proof containers and in a dry place.

14. Procedure

14.1 All data are to be recorded on the "Soil-Cement Laboratory Compaction Test" form shown on figure 1.

14.2 Determine the mass of the compaction mold to the nearest 0.01 lbm and record the value.

14.3 Ensure that the compaction device rests firmly on a level concrete (or equivalent) base.

14.4 Assemble the mold and collar and secure to the baseplate.

14.5 Select the initial specimen for testing and immediately prior to compaction, pass the material to be compacted through a No. 4 (4.75 mm) sieve to break up any lumps of soil-cement resulting from the specimen preparation procedure.

14.6 Place 2.0 to 2.5 lbm of soil-cement into the mold and spread into a layer of uniform thickness.

14.7 Using a mechanical or manual compaction apparatus, compact the layer with 25 blows distributed equally over the surface of the layer.

14.8 Repeat the compaction process outlined in subparagraphs 14.6 and 14.7 until three layers have been compacted. The third layer, when compacted, should extend into the collar about 1/4 inch, but not more than 1/2 inch. If, after the last layer is compacted, the specimen is too short or too long it should be discarded and a new specimen compacted.

NOTE 3.– When compacting specimens wetter than optimum moisture content, uneven compacted surfaces may occur and some operator judgment is required as to the average height of the specimen. The last blow delivered by the rammer should not extend below the top of the compaction mold.

14.9 Taking care not to disturb the compacted soil-cement within the mold, remove the collar from the mold and use a straightedge to trim the specimen flush with

the top of the mold. A knife may be used to remove or loosen soil-cement sticking to the inside of the collar and for initial trimming of the compacted specimen.

14.10 Remove the mold from the baseplate.

14.11 Determine and record the mass of the mold and the compacted soil-cement to the nearest 0.01 lbm.

14.12 Extrude the specimen from the mold and cut about 1-1/2-inch-square by 6-inch-long moisture content specimen from the center of the compacted specimen. The moisture content specimen should have a mass of at least 200 grams.

14.13 Place the moisture content specimen in a suitable container for drying and determination of moisture content.

14.14 Calculate the wet density of the compacted specimen to the nearest 0.1 lbm/ft³.

14.14.1 Convert wet density to wet unit weight by changing lbm/ft³ to lbf/ft³ (assume 1 lbm = 1 lbf) and record to the nearest 0.1 lbf/ft³.

14.15 Repeat the procedure outlined in subparagraphs 14.4 through 14.14 until at least five specimens have been compacted.

NOTE 4.–After determining the wet unit weight of the second and each successive compacted specimen, compare the wet unit weights to ensure that a desired pattern is developing so that points on each side of the optimum moisture content are compacted.

14.16 Determine the moisture content of each compacted specimen in accordance with USBR 5300.

14.17 Calculate the dry unit weight for each compacted specimen and record to the nearest 0.1 lbf/ft³.

14.18 Plot the moisture contents (abscissa) and dry unit weights (ordinate) as shown on figure 2.

14.19 Draw a smooth curve connecting the plotted points

14.20 The optimum moisture content is the moisture content corresponding to the peak of the curve. Determine the value and record to the nearest 0.1 percent.

14.21 The maximum dry unit weight is the dry unit weight corresponding to the optimum moisture content. Determine the value and record to the nearest 0.1 lbf/ft³.

14.22 If two or more plotted points do not fall on each side of the optimum moisture content, additional specimens must be prepared and compacted at appropriate moisture contents.

15. Calculations

15.1 Calculate the wet density of the compacted soil-cement specimen to the nearest 0.1 lbm/ft³.

$$\rho_{wet} = \frac{D - E}{V} \qquad (1)$$

where:

ρ_{wet} = wet density of compacted soil-cement, lbm/ft³
V = volume of mold, ft³
D = mass of mold + wet soil-cement, lbm
E = mass of mold, lbm

15.1.1 In the procedure, wet density is converted to wet unit weight by changing lbm/ft³ to lbf/ft³. (Assume 1 lbm = 1 lbf.)

15.2 Calculate the dry unit weight of the soil-cement specimen.

$$\gamma_d = \frac{\gamma_{wet}}{1 + \left(\frac{w}{100}\right)} \qquad (2)$$

where:

γ_d = dry unit weight of compacted soil-cement, lbf/ft³
w = moisture content, %
γ_{wet} = wet unit weight, lbf/ft³

16. Report

16.1 The report is to consist of the following completed and checked USBR forms:

"Soil-Cement Laboratory Compaction Test" (fig. 1).

"Soil-Cement Compaction Curve" (fig. 2).

16.2 All calculations are to show a checkmark and all plotting must be checked.

7-2305 (6-85) Bureau of Reclamation	SOIL - CEMENT LABORATORY COMPACTION TEST						Designation USBR 5800- 8 9
PROJECT: Example				FEATURE: Example			
LOCATION: AP-25				DEPTH / ELEVATION: 3.5 - 10.5 FT			
SAMPLE NO.: 5800T		CEMENT CONTENT: 12.0 %					
PERFORMED BY / DATE		COMPUTED BY / DATE		CHECKED BY / DATE			
Auxiliary Tests: USBR 5205- 8 9, USBR 5300- 8 9							
SPECIMEN	1	2	3	4	5	6	7
UNIT WEIGHT DETERMINATIONS							
WATER ADDED (ml)	200	270	340	410	480		
(1) MOLD VOLUME (ft^3)	0.0498	0.0498	0.0498	0.0498	0.0498		
(2) MASS CYL + WET SOIL – CEMENT (lbm)	13.51	13.69	13.78	13.81	13.71		
(3) MASS OF CYLINDER (lbm)	7.06	7.06	7.06	7.06	7.06		
(4) MASS OF WET SOIL – CEMENT (lbm) (2) – (3)	6.45	6.63	6.72	6.75	6.65		
(5) WET UNIT WEIGHT (lbf/ft^3) $\frac{(4)}{(1)}$ *	129.5	133.1	134.9	135.5	133.5		
MOISTURE CONTENT DETERMINATIONS							
DISH NO.	2	9	6	4	8		
(6) MASS DISH + WET SOIL – CEMENT (g)	391.5	384.5	382.4	386.7	382.1		
(7) MASS DISH + DRY SOIL – CEMENT (g)	375.9	363.8	359.1	359.6	352.4		
(8) MASS OF DISH (g)	139.8	121.6	129.4	133.8	140.6		
(9) MASS OF WATER (g) (6) – (7)	15.6	20.7	23.3	27.1	29.7		
(10) MASS OF DRY SOIL – CEMENT (g) (7) – (8)	236.1	242.2	229.7	225.8	211.8		
(11) MOISTURE CONTENT (% Dry Mass) $\frac{(9)}{(10)} \times 100$	6.6	8.5	10.1	12.0	14.0		
(12) DRY UNIT WEIGHT (lbf/ft^3) $\frac{(5)}{1 + (11)/100}$	121.5	122.7	122.5	121.0	117.1		
TIME WATER WAS ADDED (24-HOUR CLOCK)	0700	0724	0749	0810	0840		
TIME COMPACTION COMPLETED (24-HOUR CLOCK)	0718	0744	0806	0829	0900		
TOTAL TIME ELAPSED (MINUTES)	18	20	17	19	20		

QUESTIONS TO ANSWER FROM OBSERVATIONS BY OPERATORS DURING TEST

1. HOW FAST DOES SAMPLE ABSORB WATER? FAST X MEDIUM _____ SLOW _____
2. IS DIFFICULTY ENCOUNTERED MIXING WATER WITH SOIL-CEMENT? NONE
3. FOR WHICH SPECIMENS IS SAMPLE CRUMBLY? 1 FIRM? 2,3,4 SOFT? 5 (SPECIMEN)
4. WAS BLEEDING NOTICED DURING TEST? YES IF SO, WHICH SPECIMENS? 5
5. FOR WHICH SPECIMENS IS SAMPLE SPONGY? 4,5
6. OTHER COMMENTS _____

* For this application, 1 pound mass is considered to be numerically equal to 1 pound force.

GPO 848 - 521

Figure 1. - Soil-cement laboratory compaction test — example.

7-2151 (6-85) Bureau of Reclamation	SOIL - CEMENT COMPACTION CURVE	Designation USBR 5800- 8 9
PROJECT: Example	FEATURE: Example	
SAMPLE NO.: 5800T	LOCATION: AP-25	DEPTH: 3.5 – 10.5 ft (m)
PREPARED BY	DATE	CHECKED BY / DATE

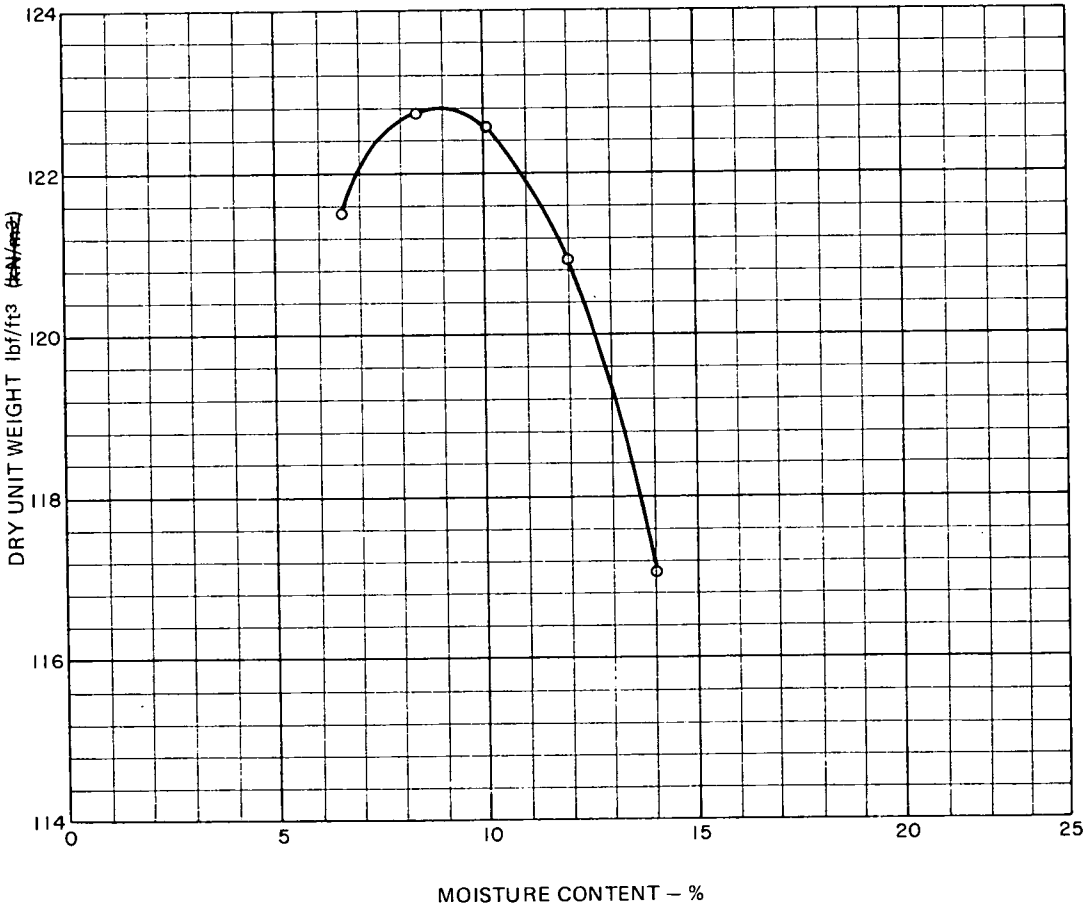

21	PERCENT LARGER THAN TESTED	12.0	PERCENT CEMENT
122.7	MAXIMUM DRY UNIT WEIGHT – lbf/ft3 ☒ kN/m3 ☐	SP-SM	SOIL CLASSIFICATION
8.9	OPTIMUM MOISTURE CONTENT – PERCENT	2.68	SPECIFIC GRAVITY OF SOIL

NOTES:

GPO 848-512

Figure 2. - Soil-cement compaction curve — example.

UNITED STATES DEPARTMENT OF THE INTERIOR
BUREAU OF RECLAMATION

USBR 5805-89

PROCEDURE FOR

PREPARING SOIL-CEMENT SPECIMENS FOR COMPRESSIVE STRENGTH TESTING FOR MIX DESIGNS

INTRODUCTION

This procedure is under the jurisdiction of the Geotechnical Services Branch, code D-3760, Research and Laboratory Services Division, Denver Office, Denver, Colorado. The procedure is issued under the fixed designation USBR 5805. The number immediately following the designation indicates the year of acceptance or the year of last revision.

This procedure is similar to ASTM D 1632, except that this procedure contains a rewritten and more detailed description and includes USBR data forms. Corresponding forms in SI units are included. The SI forms have the letter M following the first digit in the form number.

1. Scope

1.1 This designation outlines the procedure for preparing and curing soil-cement specimens for unconfined compressive strength testing to determine the adequacy of mix designs.

2. Auxiliary Tests

2.1 The moisture content of the soil must be determined in accordance with USBR 5300 as part of this procedure. The laboratory maximum dry unit weight and optimum moisture content of the soil-cement mixture must be determined in accordance with USBR 5800 in order to determine values necessary to compact test specimens at a percentage of the laboratory maximum dry unit weight at optimum moisture content.

3. Applicable Documents

3.1 *USBR Procedures*:
USBR 1009 Calibrating Compaction Molds
USBR 3900 Standard Definitions of Terms and Symbols Relating to Soil Mechanics
USBR 5300 Determining Moisture Content of Soil and Rock by the Oven Method
USBR 5320 Determining Specific Gravity of Soils
USBR 5800 Performing Laboratory Compaction of Soil-Cement Mixtures
USBR 5810 Performing Compressive Strength Testing of Soil-Cement Cylinders
USBR 5820 Performing Wet-Dry Durability Testing of Compacted Soil-Cement Mixtures
USBR 5825 Performing Freeze-Thaw Durability Testing of Compacted Soil-Cement Mixtures

3.2 *ASTM Standards*:
C 150 Specification for Portland Cement
C 511 Specification for Moist Cabinets, Moist Rooms, and Water Storage Tanks Used in the Testing of Hydraulic Cements and Concretes.
C 595 Specification for Blended Hydraulic Cements
D 1632 Specification for Making and Curing Soil-Cement Compression and Flexure Test Specimens in the Laboratory
E 11 Specification for Wire-Cloth Sieves for Testing Purposes

4. Summary of Method

4.1 Molded cylindrical specimens of compacted soil-cement are tested after curing to determine the unconfined compressive strength of the material for mix designs. Compressive strength test specimens are formed at a minimum of three different cement contents. Twelve specimens are prepared at each cement content so that three specimens can be tested at 3, 7, 28, and 90 days, respectively. A batch of soil-cement is prepared at the desired cement content and optimum moisture content. Only enough material for three test specimens and a moisture content determination is mixed at one time. Each specimen is prepared by placing the soil-cement mixture in a mold in three equal layers. Each layer is rodded to a height of approximately 2 inches (50 mm). The specimen is then compacted to the specified unit weight with a dropping-weight compacting machine (fig. 1). The specimens are cured in a high humidity environment for a minimum of 12 hours and then extruded from the mold. After extrusion, the specimens are kept in a high humidity environment for the specified curing time prior to compression testing.

5. Significance and Use

5.1 Soil-cement unconfined compressive strength testing is performed to determine the unconfined compressive strength of compacted, cured soil-cement mixtures.

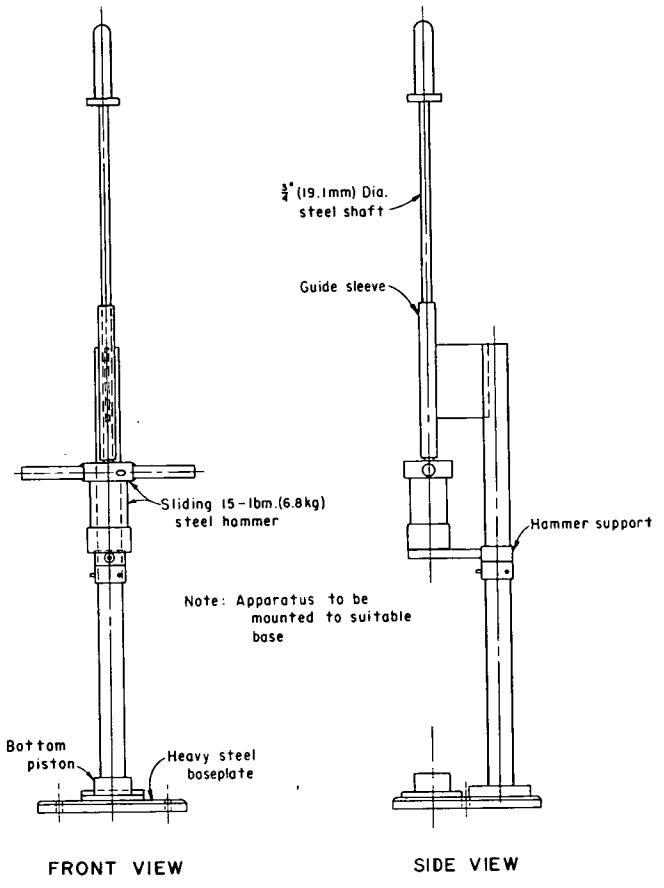

Figure 1. - Dropping-weight compacting machine.

5.2 The unconfined compressive strength test is one of a series of tests normally performed to evaluate the adequacy of compacted, cured soil-cement. Other tests include wet-dry durability (USBR 5820) and freeze-thaw durability (USBR 5825).

5.3 Laboratory-compacted soil-cement specimens are tested to determine the cement content to be specified in a soil-cement mix design. Based on satisfactory performance of existing soil-cement structures, Bureau criteria require minimum unconfined compressive strength values of 600 lbf/in^2 at 7 days and 875 lbf/in^2 at 28 days (4100 and 6000 kPa). Unconfined compressive strength testing is conducted prior to durability testing to eliminate mix designs that do not meet unconfined compressive strength criteria. An economical mix design uses the minimum cement content that meets both strength and durability requirements.

6. Terminology

6.1 Definitions are in accordance with USBR 3900.

6.2 Terms not included in USBR 3900 specific to the designation are:

6.2.1 *Cement Content.*–Amount of cement in a soil-cement mixture, specified as a percent of dry soil mass.

6.2.2 *Soil-Cement Moisture Content.*–Ratio of the mass of water to the total dry mass of soil-cement mixture, expressed as a percent.

6.2.3 *Saturated Surface Dry* (SSD).–Condition of an aggregate particle when the permeable voids are filled with water and no water is on the exposed surfaces.

7. Apparatus

7.1 *General Apparatus*:

7.1.1 *Sieve.*–U.S.A. Standard series 1 -inch, 3/4-inch, No. 4, and No. 16 (25.0-, 19.0-, 4.75-, and 1.18-mm) sieves, conforming to the requirements of ASTM E 11.

7.1.2 *Balances or Scales.*–Typical balances or scales used for this designation are:

Application	*Readable to*	*Approximate capacity*
Moisture content	0.1 g	1000 g
Mass of compaction specimen	0.01 lbm	25 lbm

7.1.3 *Tamping Rod.*–A round-nosed 1/2- or 5/8-inch (13- or 16-mm) diameter, smooth steel rod about 20 inches (500-mm) in length.

7.1.4 *Moist Room or Water Bath.*–A moist room or water bath capable of maintaining a uniform temperature of 73.4±3.0°F (23.0±1.7°C) and a relative humidity of not less than 95 percent, conforming to the requirements of ASTM C 511.

7.2 *Equipment Unique to This Procedure*:

7.2.1 *Compressive Strength Test Specimen Extruder.*–Consisting of a piston, jack, and frame for extruding soil-cement specimens from the mold.

7.2.2 *Dropping-Weight Compacting Machine.*–A controlled dropping-weight device of 15 lbm (6.8 kg) (fig. 1) for striking the top piston (fig. 2). Shop drawings are available upon request from the Bureau's Denver Office. Ensure that the compacting machine rests firmly on a level, uniformly rigid foundation, equivalent to a 200-lbm (90-kg) cylinder of concrete.

7.2.3 *Compressive Strength Test Specimen Molds* (fig. 2):

7.2.3.1 Molds having an inside diameter of 2.80±0.01 inch (71.12±0.25 mm) and a height of 9.00±0.01 inch (229±0.25 mm) for molding test specimens 2.80±0.01 inch (71.12±0.25 mm) in diameter and 5.60±0.01 inch (142±0.25 mm) high. Satisfactory molds may be made from 4340 cold-drawn, seamless steel tubing with a rustproof coating.

7.2.3.2 Machined steel top and bottom pistons having a diameter 0.005 inch (0.13 mm) less than the mold inside diameter.

7.2.3.3 A spacer clip.

7.2.3.4 Two aluminum separating disks 1/16 inch thick by 2.78 inches (1.59 by 70.6 mm) in diameter for each test specimen.

7.2.4 A funnel to fill the 2.80-inch (71.12 mm) diameter molds with soil-cement.

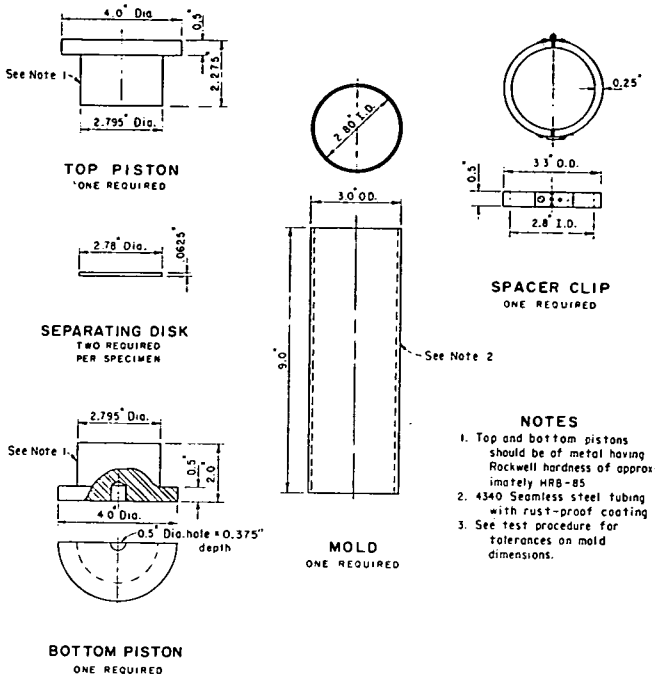

Figure 2. – Soil-cement compressive strength mold assembly.

7.3 *Miscellaneous Equipment*:

7.3.1 Miscellaneous mixing tools such as a large mixing pan and trowel, or a suitable mechanical device for thoroughly mixing soil, cement, and water.

7.3.2 Spatula for distributing soil-cement along the inside of the mold.

7.3.3 Damp towels for keeping test specimens moist.

7.3.4 Tags for labeling molds.

7.3.5 Waterproof markers for labeling the test specimens.

7.3.6 Vegetable oil spray or commercial lubricating oil to prevent soil-cement from adhering to the mold.

7.3.7 Suitable pans for handling materials and transporting test specimens.

7.3.8 Plastic for covering soil-cement mixture to prevent moisture loss.

8. Reagents and Materials

8.1 Tapwater that is free of acids, alkalies, or oils and is suitable for drinking should be used for mixing water.

8.2 Cement is to conform to ASTM C 150 and ASTM C 595.

9. Precautions

9.1 *Safety Precautions*:

9.1.1 This designation may involve hazardous materials, operations, and equipment.

9.1.2 Exercise care to protect hands from the drying and abrasive properties of cement.

9.1.3 Carefully mix the soil and cement in a large pan to avoid forming a cement dust cloud. Wear a protective mask to prevent inhaling cement dust.

9.2 *Technical Precautions*:

9.2.1 To minimize the effects of cement hydration and evaporation, perform the test expeditiously and continuously to completion.

9.2.2 Laboratory-compacted soil-cement test specimens are very fragile, and special care should be taken in preparation, handling, and transportation to prevent damage.

9.2.3 When extruding a test specimen from the mold, maintain a slow, constant rate of extrusion. Fractures may occur in the specimen if the extrusion process is not conducted with care.

10. Sampling, Test Specimens, and Test Units

10.1 *Cement.*–Pass cement through a No. 16 (1.18-mm) sieve and discard all lumps.

10.2 *Water.*–The mixing water must conform to subparagraph 8.1.

10.3 *Soil*:

10.3.1 Dry the soil sample — if damp when received from the field — until it becomes friable. Allow the sample to air-dry, or use a drying apparatus such that the temperature of the sample does not exceed 140 °F (60 °C). Thoroughly break up any large soil aggregations in such a manner as to avoid reducing the natural size of individual soil particles.

10.3.2 Sieve the sample on the No. 4 (4.75-mm) sieve. For soils containing more than 5 percent (by dry mass) material retained on the No. 4 sieve, use the procedure outlined in annex A1 for processing the plus No. 4 soil.

10.3.3 Obtain a representative sample of soil passing the No. 4 sieve, and determine the moisture content of the sample in accordance with USBR 5300.

10.4 Twelve specimens are required at each cement content so that three each can be tested at 3, 7, 28, and 90 days. However, only enough material to prepare three specimens is mixed at one time.

11. Calibration and Standardization

11.1 Verify that equipment is currently calibrated in accordance with the applicable calibration procedure. If the calibration is not current, perform calibration before using the equipment for this procedure.

11.2 Calibrate compressive strength test specimen molds in accordance with USBR 1009.

12. Conditioning

12.1 Bring all the materials to room temperature [preferably 65 to 75 °F (18 to 24 °C)] before beginning the test.

12.2 Store cement in moisture-proof containers — in a dry place.

12.3 Cure the test specimen in the mold in a high-humidity environment for the time specified in subparagraph 13.15 before extruding from the mold.

12.4 After extrusion from the mold, cure the test specimen in a high-humidity environment for the specified moist curing period.

13. Procedure

13.1 Record all data on the "Preparation of Soil-Cement for Molded Compressive Strength Test Specimens" form.

- For soils containing 5 percent or less plus No. 4 (4.75-mm) aggregate, record on figure 3A or 3B.
- For soils containing more than 5 percent plus No. 4 (4.75-mm) aggregate, record on figure 3C or 3D.
- Record placement data on the "Soil-Cement Unconfined Compressive Strength Test" form, figure 4A or 4B.

Figures 3A, 3C, and 4A are in inch-pound units and figures 3B, 3D, and 4B are in SI units.

13.2 Calculate individual quantities of soil, cement, and water required to prepare three test specimens at the specified (usually 98) percent of laboratory maximum dry unit weight (USBR 5800) plus sufficient material to obtain one moisture content determination. Calculate each quantity to the nearest 0.01 lbm (5 g). Add an additional 0.3 percent water to compensate for moisture loss caused by evaporation and cement hydration. The initial moisture content of the minus No. 4 (4.75 mm) soil — as determined in accordance with USBR 5300 — is used to calculate the additional water required to bring the soil-cement mixture to optimum moisture content. For soils containing more than 5 percent plus No. 4 (4.75 mm) material, refer to annex A1 for calculations.

13.3 Use appropriate clean, dry containers and obtain quantities of soil, cement, and water in the amounts calculated in subparagraph 13.2.

13.4 Mix the soil, cement, and water either by hand or in a suitable laboratory mixer. Use a continuous operation for mixing and compacting compression test specimens. Do not exceed 45 minutes elapsed time between addition of water and final compaction.

13.4.1 *Hand Mixing.*–Mix the batch in a clean, damp, metal pan or on top of a damp steel table with a blunt bricklayer's trowel using the following procedure:

13.4.1.1 Mix the cement and soil until thoroughly blended.

13.4.1.2 Add the calculated quantity of water required to raise the moisture content of the mixture to the optimum moisture content plus an additional 0.3 percent water to compensate for moisture loss caused by evaporation and cement hydration; mix thoroughly.

13.4.2 *Machine Mixing.*–Follow the sequence specified in subparagraphs 13.4.1.1 through 13.4.1.2. To eliminate segregation of coarser soil particles, deposit machine-mixed soil-cement into a clean, damp, metal pan and remix with the trowel.

13.4.3 Balls of cement may form when water is added to soil-cement mixtures. Break down and mix these balls of cement with the soil-cement mixture to ensure that the cement and water are distributed uniformly.

13.5 Protect the soil-cement mixture against moisture loss by immediately covering with plastic or damp towels.

13.6 Obtain a representative sample of the moist soil-cement, screen out any plus No. 4 (4.75 mm) material, and determine the moisture content of the minus No. 4 (4.75 mm) fraction in accordance with USBR 5300. Record the moisture content on the "Soil-Cement Unconfined Compressive Strength Test" form (fig. 4A or 4B).

13.7 Lightly spray the inside of the mold and both sides of two separating disks with vegetable oil or commercial lubricating oil. Place a separating disk on the top of the bottom piston. Place the spacer clip over the bottom piston. Place the mold over the bottom piston and on top of the spacer clip so that the bottom piston extends about 1 inch (25 mm) into the mold.

13.8 Obtain the quantity of soil-cement required to produce one specimen when placed at optimum moisture content and at the specified (usually 98) percent of the laboratory maximum dry unit weight — as determined by USBR 5800.

13.9 Place the funnel on top of the mold.

13.10 Using the funnel, place the first layer of soil-cement in the mold. Carefully spade the mixture around the mold sides with a thin spatula. Compact the layer of soil-cement by steadily and firmly forcing (with little impact) the round-nosed tamping rod repeatedly through the mixture from the top down to the point of refusal. Distribute the rodding uniformly over the cross section of the mold. Continue rodding until the layer is packed to a height of about 2 inches (50 mm). Repeat the process until the mixture has been placed in the required three layers and is packed to a height of about 6 inches (150 mm) above the top of the bottom piston or to about 2 inches (50 mm) below the top of the mold.

13.11 Place a separating disk on the surface of the soil-cement. Remove the spacer clip supporting the mold on the bottom piston. Place the top piston in the mold. Apply a dynamic load with the dropping-weight compacting machine until the specimen is 5.60 inches (142 mm) high. The proper height of the specimen is obtained when the flanges of both the top and bottom pistons come into contact with the mold. Approximately six to eight blows with the compacting machine should bring the specimen to the proper height.

NOTE 1.–If more than 10 blows are required, the rodding performed in subparagraph 13.10 was insufficient and the specimen is to be discarded. The process of rodding each layer aids in achieving a uniform unit weight throughout the specimen. An excessive number of blows with the compacting machine creates a higher unit weight on the ends of the specimen than in the middle of the specimen. A uniform unit weight throughout the specimen is critical for accurate compressive strength test results.

13.12 Remove the pistons from the mold assembly, leaving the specimen and separating disks in the mold. Label the mold and record on figure 4A or 4B.

13.13 Repeat subparagraphs 13.7 through 13.12, forming two additional specimens.

13.14 Repeat subparagraphs 13.2 through 13.13 for nine additional specimens.

13.15 Cure the specimen in the mold in a high-humidity environment for 12 hours or longer, if required, before extruding from the mold.

13.16 To assist in removal of the specimen from the mold, spray a lubricant (such as a vegetable oil or commercial lubricating oil) inside the ends of the mold and in the collar of the extruder. Remove the specimen from the mold using a suitable extruder. To prevent damage to the specimen, maintain a slow, constant rate of extrusion (approximately 12 in/min). Fractures can occur in the specimen if the extrusion process is not conducted with care. Keep test specimens covered with damp (not wet) towels until placed in a high-humidity environment.

13.17 Label and place the specimen in an upright position in a moist room or a water bath to provide a high-humidity curing environment (see note 2). Protect the specimen from dripping or running water for the specified moist curing period. If specimens are stored in a moist room do not leave the specimen in a pan or container that will collect water.

NOTE 2.–Care must be taken when transporting the test specimens. The specimens are very susceptible to breakage at this time.

14. Calculations

14.1 Calculate design masses of soil, cement, and water for a test specimen.

14.1.1 *Inch-Pound Units.*–Convert unit weight to density by changing lbf/ft³ to lbm/ft³ (see note 3).

$$m_{cyl} = (\rho_{dLabMax})\, DV \quad (1)$$

$$m_s = \frac{m_{cyl}}{1 + C} \quad (2)$$

$$m_c = m_{cyl} - m_s \quad (3)$$

$$m_w = m_{cyl}\,(w_o + 0.003) \quad (4)$$

where:

m_{cyl} = dry mass of test specimen at desired dry density, lbm
$\rho_{dLabMax}$ = laboratory maximum dry unit weight converted to density, lbm/ft³
D = desired percentage of laboratory maximum dry unit weight and expressed as a decimal
V = test cylinder volume, ft³
m_s = mass of dry soil, lbm
C = desired percentage of cement and expressed as a decimal
m_c = mass of cement, lbm
m_w = mass of water, lbm
w_o = optimum moisture content and expressed as a decimal
0.003 = percent of additional water required to compensate for moisture loss caused by evaporation and cement hydration and expressed in decimal form

NOTE 3.–For this application, a 1-pound mass is considered to be numerically equal to a 1-pound force.

14.1.2 *SI Units*:

$$\rho_{dLabMax} = 101.97\,(\gamma_{dLabMax}) \quad (5)$$

$$m_{cyl} = (\rho_{dLabMax})\, DV \quad (6)$$

$$m_s = \frac{m_{cyl}}{1 + C} \quad (7)$$

$$m_c = m_{cyl} - m_s \quad (8)$$

$$m_w = m_{cyl}\,(w_o + 0.003) \quad (9)$$

where:

$\rho_{dLabMax}$ = laboratory maximum dry density, kg/m³
$\gamma_{dLabMax}$ = laboratory maximum dry unit weight, kN/m³
101.97 = conversion from kN/m³ to kg/m³
m_{cyl} = dry mass of a test specimen at desired unit weight, kg
D = desired percentage of laboratory maximum dry unit weight and expressed as a decimal
V = test cylinder volume, m³
m_s = mass of dry soil, kg
C = desired percentage of cement and expressed as a decimal
m_c = mass of cement, kg
m_w = mass of water, kg
w_o = optimum moisture content and expressed as a decimal
0.003 = percent of additional water required to compensate for moisture loss caused by evaporation and cement hydration and expressed in decimal form

NOTE 4.–Two values are combined in the 101.97 above conversion. To convert to density (kg/m³), divide the unit weight (kN/m³) by the acceleration of gravity (9.8067 m/s²) and multiply by 1000.

14.2 Calculate the mass of moist soil and the additional water necessary for one test specimen (in-lb or SI systems):

$$m_{sm} = m_s\,(1 + w_f) \quad (10)$$

$$m_{wa} = m_w - (m_{sm} - m_s) \quad (11)$$

where:

m_{sm} = mass of moist soil, lbm or kg
w_f = moisture content of soil and expressed as a decimal
m_{wa} = mass of additional water to be added, lbm or kg

14.3 Calculate the total wet mass of soil-cement for one test specimen:

$$m_{tw} = m_c + m_{sm} + m_{wa} \quad (12)$$

where m_{tw} equals total wet mass of soil-cement for one test specimen, lbm or kg.

14.4 Calculate the masses of moist soil, cement, and additional water necessary for a test batch equal to 3.5 specimens:

$$B_c = 3.5\ m_c \quad (13)$$

$$B_{sm} = 3.5\ m_{sm} \quad (14)$$

$$B_{wa} = 3.5\ m_{wa} \quad (15)$$

where:

B_c = mass of cement per batch, lbm or kg
B_{sm} = mass of moist soil per batch, lbm or kg
B_{wa} = mass of additional water per batch, lbm or kg

14.5 Calculate the mass of soil-cement per layer for placement in the mold:

$$\text{Mass of soil-cement per layer, lbm or kg} = \frac{m_{tw}}{3} \quad (16)$$

15. Report

15.1 The report is to consist of the following completed and checked forms:

"Preparation of Soil-Cement For Molded Compressive Strength Test Specimens" [for soil containing 5 percent or less plus No. 4 (4.75-mm) aggregate (fig. 3A or 3B)].

"Preparation of Soil-Cement for Molded Compressive Strength Test Specimens" [for soil containing more than 5 percent plus No. 4 (4.75-mm) aggregate (fig. 3C or 3D)].

"Soil-Cement Unconfined Compressive Strength Test" (fig. 4A or 4B).

15.2 All calculations are to show a checkmark.

7-2302 (6-85) Bureau of Reclamation	PREPARATION OF SOIL-CEMENT FOR MOLDED COMPRESSIVE STRENGTH TEST SPECIMENS (for soil containing 5 percent or less plus No. 4 aggregate)	Designation USBR 5805- 8 9

PROJECT	FEATURE
Example	Example
LOCATION	DEPTH/ELEVATION
AP-25	3.5 - 7.5 ft.
SAMPLE NO.	SPECIMENS NO.
5805 T-	1, 2, 3

COMPUTED BY / DATE	CHECKED BY / DATE	PREPARED BY

Auxiliary tests: USBR 5300- 8 9, USBR 5800- 8 9

DESIGN DATA

1. Design cement content, decimal	0.120	
2. Laboratory maximum dry unit weight	125.0	lbf/ft³
3. Optimum moisture content, decimal	0.112	
4. Moisture content of soil, decimal	0.013	
5. Test specimen volume	0.0200	ft³
6. Desired percentage of laboratory maximum dry unit weight, decimal	0.980	

DESIGN MASSES PER SPECIMEN (DRY SOIL)

7. Total dry mass at desired unit weight (2) x (6) x (5)	2.45	lbm 1/
8. Mass of dry soil (7) ÷ [1.0 + (1)]	2.19	lbm
9. Mass of cement (7) - (8)	0.26	lbm
10. Mass of water (8) x [(3) + 0.003] 2/	0.25	lbm

DESIGN MASSES PER SPECIMEN (MOIST SOIL)

11. Mass of moist soil (8) x [1.0 + (4)]	2.22	lbm
12. Mass of additional water (10) - [(11) - (8)]	0.22	lbm
13. Total wet mass of soil-cement (9) + (11) + (12)	2.70	lbm
14. Mass of soil-cement per layer (13) ÷ 3.0	0.90	lbm

BATCH QUANTITIES (for 3½ specimens)

15. Mass of cement (9) x 3.5	0.91	lbm
16. Mass of moist soil (11) x 3.5	7.77	lbm
17. Mass of additional water (12) x 3.5	0.77	lbm

1/ For this application, 1-pound mass is considered to be numerically equal to 1-pound force.

2/ 0.3% moisture added to account for moisture loss caused by evaporation and hydration.

GPO 848 - 515

Figure 3A. - Preparation of soil-cement for molded compressive strength test specimens. Soil containing 5 percent or less plus No. 4 aggregate.

7m-2302 (6-85) Bureau of Reclamation	**PREPARATION OF SOIL-CEMENT FOR MOLDED COMPRESSIVE STRENGTH TEST SPECIMENS** (for soil containing 5 percent or less plus 4.75-mm aggregate)	Designation USBR 5805- 8 9

PROJECT	FEATURE
Example	Example
LOCATION	**DEPTH/ELEVATION**
AP-25	1.1 - 2.3 m
SAMPLE NO.	**SPECIMENS NO.**
5805 T-	1, 2, 3

COMPUTED BY	DATE	CHECKED BY	DATE	PREPARED BY

Auxiliary tests: USBR 5300- 8 9, USBR 5800- 8 9

DESIGN DATA

1. Design cement content, decimal	0.120	
2. Laboratory maximum dry unit weight	19.63	kN/m³
3. Laboratory maximum dry density (2) x 101.97 [1/]	2002	kg/m³
4. Optimum moisture content, decimal	0.112	
5. Moisture content of soil, decimal	0.013	
6. Test specimen volume [2/]	5.63×10^{-4}	m³
7. Desired percentage of laboratory maximum dry unit weight, decimal	0.980	

DESIGN MASSES PER SPECIMEN (DRY SOIL)

8. Total dry mass at desired dry density (3) x (7) x (6)	1.105	kg
9. Mass of dry soil (8) ÷ [1.0 + (1)]	0.990	kg
10. Mass of cement (8) - (9)	0.115	kg
11. Mass of water (9) x [(4) + 0.003] [3/]	0.114	kg

DESIGN MASSES PER SPECIMEN (MOIST SOIL)

12. Mass of moist soil (9) x [1.0 + (5)]	1.005	kg
13. Mass of additional water (11) - [(12) - (9)]	0.100	kg
14. Total wet mass of soil-cement (10) + (12) + (13)	1.220	kg
15. Mass of soil-cement per layer (14) ÷ 3.0	0.405	kg

BATCH QUANTITIES (for 3½ specimens)

16. Mass of cement (10) x 3.5	0.400	kg
17. Mass of moist soil (12) x 3.5	3.520	kg
18. Mass of additional water (13) x 3.5	0.350	kg

1/ Two values are combined in the constant. To convert from unit weight (kN/m³) to density (kg/m³), divide by the acceleration of gravity (9.8067 m/s²) and multiply by 1,000.
2/ To convert from cm³ to m³, divide by 10^6.
3/ 0.3% moisture added to account for moisture loss caused by evaporation and hydration.

GPO 848 - 516

Figure 3B. - Preparation of soil-cement for molded compressive strength test specimens. Soil containing 5 percent or less plus 4.75-mm aggregate.

7-2301 (6-85) Bureau of Reclamation	PREPARATION OF SOIL-CEMENT FOR MOLDED COMPRESSIVE STRENGTH TEST SPECIMENS (for soil containing more than 5 percent plus No. 4 aggregate)	Designation USBR 5805- 8 9

PROJECT	FEATURE
Example	Example
LOCATION	**DEPTH/ELEVATION**
AP-25	3.5 – 7.5 ft.
SAMPLE NO.	**SPECIMENS NO.**
5805T	1, 2, 3

COMPUTED BY	DATE	CHECKED BY	DATE	PREPARED BY

Auxiliary tests: USBR 5300- 8 9 USBR 5320- 8 9 USBR 5800- 8 9

DESIGN DATA

1. Design cement content, decimal	0.08	
2. Laboratory maximum dry unit weight	136.0	lbf/ft³
3. Desired percentage of laboratory maximum dry unit weight, decimal	0.980	
4. Optimum moisture content, decimal	0.060	
5. Percentage of plus No. 4 aggregate, decimal	0.209	
6. Specific gravity of plus No. 4 aggregate	2.56	
7. Moisture content of minus No. 4 soil, decimal	0.013	
8. Test specimen volume	0.0200	ft³

CORRECTIONS FOR PLUS No. 4 AGGREGATE

9. Theoretical unit weight of composite of minus No. 4 soil-cement at desired D-value with SSD aggregate added $\frac{1.0}{\frac{(5)}{62.4 \times (6)} + \frac{1.0 - (5)}{(2) \times (3)}}$	138.1	lbf/ft³
10. Increase in unit weight (9) – [(2) x (3)]	4.8	lbf/ft³
11. Unit weight of additional cement required (10) x (1)	0.4	lbf/ft³
12. Dry unit weight of total material (9) + (11)	138.5	lbf/ft³

DESIGN MASSES PER SPECIMEN

13. Dry mass of soil-cement per specimen (12) x (8)	2.77	lbm 1/
14. Dry mass of minus No. 4 soil and SSD aggregate (13) ÷ [1.0 + (1)]	2.56	lbm
15. Dry mass of cement (13) – (14)	0.21	lbm
16. Dry mass of minus No. 4 soil (14) x [1.0 – (5)]	2.02	lbm
17. Mass of SSD aggregate (14) – (16)	0.54	lbm
18. Mass of water [(15) + (16)] x [(4) + 0.003] 2/	0.14	lbm
19. Mass of moist minus No. 4 soil (16) x [1.0 + (7)]	2.05	lbm
20. Mass of additional water (18) – [(19) – (16)]	0.11	lbm
21. Total wet mass of soil-cement (15) + (17) + (19) + (20)	2.91	lbm
22. Mass of soil-cement per layer (21) ÷ 3.0	0.97	lbm

BATCH QUANTITIES (for 3½ specimens)

23. Mass of cement (15) x 3.5	0.74	lbm
24. Mass of moist minus No. 4 soil (19) x 3.5	7.18	lbm
25. Mass of additional water (20) x 3.5	0.39	lbm
26. Mass of SSD aggregate (17) x 3.5	1.89	lbm

1/ For this application, 1-pound mass is considered to be numerically equal to 1-pound force.

2/ 0.3% moisture added to account for moisture loss caused by evaporation and hydration.

GPO 848-513

Figure 3C. - Preparation of soil-cement for molded compressive strength test specimens. Soil containing more than 5 percent plus No. 4 aggregate.

7m-2301 (6-85) Bureau of Reclamation	PREPARATION OF SOIL-CEMENT FOR MOLDED COMPRESSIVE STRENGTH TEST SPECIMENS (for soil containing more than 5 percent plus 4.75-mm aggregate)	Designation USBR 5805- 8 9

PROJECT	FEATURE
Example	Example
LOCATION	**DEPTH/ELEVATION**
AP-25	1.1 - 2.3 m
SAMPLE NO.	**SPECIMENS NO.**
5805T	1, 2, 3

COMPUTED BY	DATE	CHECKED BY	DATE	PREPARED BY

Auxiliary tests: USBR 5300- 8 9 USBR 5320- 8 9 USBR 5800- 8 9

DESIGN DATA

1. Design cement content, decimal	0.08	
2. Laboratory maximum dry unit weight	21.89	kN/m³
3. Laboratory maximum dry density (2) x 101.97 [1/]	2232	kg/m³
4. Desired percentage of laboratory maximum dry unit weight, decimal	0.980	
5. Optimum moisture content, decimal	0.060	
6. Percentage of plus 4.75-mm aggregate, decimal	0.209	
7. Specific gravity of plus 4.75-mm aggregate	2.56	
8. Moisture content of minus 4.75-mm soil, decimal	0.020	
9. Test specimen volume [2/]	5.63×10^{-4}	m³

CORRECTIONS FOR PLUS 4.75-mm AGGREGATE

10. Theoretical density of composite of minus 4.75-mm soil-cement at desired D-value with SSD aggregate added $\frac{1.0}{\frac{(6)}{1000 \times (7)} + \frac{1.0 - (6)}{(3) \times (4)}}$	2256	kg/m³
11. Increase in density (10) – [(3) x (4)]	69	kg/m³
12. Density of additional cement required (11) x (1)	6	kg/m³
13. Dry density of total material (10) + (12)	2262	kg/m³

DESIGN MASSES PER SPECIMEN

14. Dry mass of soil-cement per specimen (13) x (9)	1.275	kg
15. Dry mass of minus 4.75-mm soil and SSD aggregate (14) ÷ [1.0 +(1)]	1.180	kg
16. Dry mass of cement (14) – (15)	0.095	kg
17. Dry mass of minus 4.75-mm soil (15) x [1.0 - (6)]	0.935	kg
18. Mass of SSD aggregate (15) – (17)	0.245	kg
19. Mass of water [(16) + (17)] x [(5) + 0.003] [3/]	0.065	kg
20. Mass of moist minus 4.75-mm soil (17) x [1.0 + (8)]	0.955	kg
21. Mass of additional water (19) – [(20) – (17)]	0.045	kg
22. Total wet mass of soil-cement (16) + (18) + (20) + (21)	1.340	kg
23. Mass of soil-cement per layer (22) ÷ 3.0	0.445	kg

BATCH QUANTITIES (for 3½ specimens)

24. Mass of cement (16) x 3.5	0.335	kg
25. Mass of moist minus 4.75-mm soil (20) x 3.5	3.340	kg
26. Mass of additional water (21) x 3.5	0.160	kg
27. Mass of SSD aggregate (18) x 3.5	0.860	kg

1/ Two values are combined in the constant. To convert from unit weight (kN/m³) to density (kg/m³), divide by the acceleration of gravity (9.8067 m/s²) and multiply by 1,000.
2/ To convert from cm³ to m³, divide by 10^6.
3/ 0.3% moisture added to account for moisture loss caused by evaporation and hydration.

GPO 848 - 514

Figure 3D. - Preparation of soil-cement for molded compressive strength test specimens. Soil containing more than 5 percent plus 4.75-mm aggregate.

7-1803 (6-85) Bureau of Reclamation	SOIL-CEMENT UNCONFINED COMPRESSIVE STRENGTH TEST	Designation USBR 5805- 8 9
Project: Example	Feature: Example	
Location: AP-25	Depth/Elev.: 3.5 - 7.5 ft.	
Sample No.: 5805T	Auxiliary tests: USBR 5300- 8 9, USBR 5800- 8 9	
Cement content: 12.0 %	Compressive strength (q_u) = Load at failure / Area ; Area = $\pi D^2/4$	
Placement: γ_d = 122.5 lbf/ft³, w = 11.0 %	Loading rate: ____ lbf/in²/s	
Placed at 98.0 % of 125.0 lbf/ft³ γ_{max}; w_o = 11.2 %		

Specimen No.	Date Formed	Date Tested	Length (L) (in)	Avg. Dia. (D) (in)	L/D Ratio	Load at failure (lbf) 3-day	7-day	28-day	90-day	Area (in²)	q_u (lbf/in²)	q_u avg. (lbf/in²)	Prepared by	Tested by	Checked by	NOTES
1	11-23-89	11-26-89														
2	11-23-89	11-26-89														
3	11-23-89	11-26-89														
4	11-23-89	11-30-89														
5	11-23-89	11-30-89														
6	11-23-89	11-30-89														
7	11-23-89	12-21-89														
8	11-23-89	12-21-89														
9	11-23-89	12-21-89														
10	11-24-89	2-2-90														
11	11-24-89	2-2-90														
12	11-24-89	2-2-90														

GPO 848 - 806

Figure 4A. - Soil-cement unconfined compressive strength test (in-lb).

7m-1803 (6-85) Bureau of Reclamation	SOIL-CEMENT UNCONFINED COMPRESSIVE STRENGTH TEST	Designation USBR 5805- 8 9
Project: Example		Feature: Example
Location: AP-25		Depth/Elev.: 1.1 - 2.3 m
Sample No.: 5805T		Auxiliary tests: USBR 5300- 8 9, USBR 5800- 8 9
Cement content: 12.0 %		Compressive strength (q_u) = $\frac{\text{Load at failure}}{\text{Area}} = \frac{N}{mm^2}$; kPa = $\frac{N}{mm^2} \times 10^3$; Area = $\frac{\pi D^2}{4}$
Placement: γ_d = 19.63 kN/m³, w = 11.0 %		Loading rate: _____ MPa/s
Placed at 98.0 % of 20.03 kN/m³ γ_{max}; w_o = 11.2 %		

Specimen No.	Date Formed	Date Tested	Length (L) (mm)	Avg. Dia. (D) (mm)	L/D Ratio	Load at failure (N) 3-day	7-day	28-day	90-day	Area (mm²)	q_u (kPa)	q_u avg. (kPa)	Prepared by	Tested by	Checked by	NOTES
1	11-23-89	11-26-89														
2	11-23-89	11-26-89														
3	11-23-89	11-26-89														
4	11-23-89	11-30-89														
5	11-23-89	11-30-89														
6	11-23-89	11-30-89														
7	11-23-89	12-21-89														
8	11-23-89	12-21-89														
9	11-23-89	12-21-89														
10	11-24-89	2-22-90														
11	11-24-89	2-22-90														
12	11-24-89	2-22-90														

GPO 848-509

Figure 4B. - Soil-cement unconfined compressive strength test (SI).

ANNEX

A1. PROCEDURES FOR FORMING COMPRESSIVE STRENGTH SPECIMENS WHEN MATERIAL RETAINED ON THE NO. 4 SIEVE IS PRESENT (IN-LB SYSTEM)

A1.1 Sieve an adequate quantity of representative soil on the 1-inch, 3/4-inch, and No. 4 sieves. Discard any aggregate retained on the 1-inch sieve. Remove aggregate passing the 1-inch sieve and retained on the 3/4-inch sieve, and replace it with an equal mass of aggregate passing the 3/4-inch sieve and retained on the No. 4 sieve. Obtain aggregate for replacement from the original sample. Keep the aggregate and the minus No. 4 soil in separate containers.

NOTE A1.1–This method for making soil-cement compressive strength test specimens is used primarily with soils having 25 percent or less aggregate retained on the No. 4 sieve. The plus 3/4-inch soil is replaced in this procedure because 3/4 inch is the maximum allowable particle size in a 3-inch-diameter by 6-inch-high cylindrical specimen.

A1.2 Determine the specific gravity and absorption of the aggregate in accordance with USBR 5320.

A1.3 Aggregate used in this procedure must be in a saturated surface dry condition (see USBR 5320 and subpar. A1.9).

A1.4 Calculate the theoretical dry unit weight of the composite of the minus No. 4 soil-cement at laboratory maximum dry unit weight—with SSD (saturated surface dry) aggregate added—using the following equation:

$$\gamma_o = \frac{1}{\frac{P}{\gamma_w G_a} + \frac{1 - P}{(\gamma_{dLabMax})\, D}} \qquad (1A)$$

where:

γ_o = theoretical dry unit weight of composite of minus No. 4 soil-cement and SSD aggregate, lbf/ft³
P = percent SSD aggregate and expressed as a decimal
G_a = specific gravity of aggregate
γ_w = unit weight of water, 62.4 lbf/ft³
$\gamma_{dLabMax}$ = laboratory maximum dry unit weight of minus No. 4 soil-cement, lbf/ft³
D = desired percentage of laboratory maximum dry unit weight and expressed as a decimal

A1.5 Calculate the increase in dry unit weight resulting from the addition of aggregate to the soil-cement mixture:

$$\gamma_i = \gamma_o - (\gamma_{dLabMax})\, D \qquad (2A)$$

where γ_i equals increase in dry unit weight of soil-cement resulting from addition of aggregate, lbf/ft³.

A1.6 Calculate the dry unit weight of the additional cement required as a result of the increase in dry unit weight:

$$\gamma_{ic} = \gamma_i C \qquad (3A)$$

where:

γ_{ic} = dry unit weight of additional cement required as a result of the increase in dry unit weight, lbf/ft³
C = design percent cement and expressed as a decimal

A1.7 Calculate the dry unit weight of the total soil-cement mixture:

$$\gamma_t = \gamma_o + \gamma_{ic} \qquad (4A)$$

where γ_t equals dry unit weight of the total soil-cement mixture, lbf/ft³.

A1.8 Calculate the dry mass of soil-cement per test specimen:

$$m_{cyl} = \rho_t V \qquad (5A)$$

where:

m_{cyl} = specimen dry mass at desired dry unit weight, lbm
ρ_t = unit weight converted to density, lbm/ft³
V = test cylinder volume, ft³

NOTE A1.2–For this application, a 1-pound mass is considered to be numerically equal to a 1-pound force.

A1.9 Calculate design masses of dry minus No. 4 soil, SSD aggregate, cement, and water for a test specimen:

$$m_{s+a} = \frac{m_{cyl}}{1 + C} \qquad (6A)$$

$$m_c = m_{cyl} - m_{s+a} \qquad (7A)$$

$$m_s = \frac{m_{s+a}}{1 + P} \qquad (8A)$$

$$m_a = m_{s+a} - m_s \qquad (9A)$$

$$m_w = (m_c + m_s)\,(w_o + 0.003) \qquad (10A)$$

where:

m_{s+a} = dry mass of minus No. 4 soil and SSD (saturated surface dry) aggregate, lbm
m_c = mass of cement, lbm
m_s = dry mass of minus No. 4 soil, lbm
m_a = mass of SSD aggregate, lbm
m_w = mass of water, lbm
w_o = optimum moisture content and expressed as a decimal
0.003 = percent of additional water required to compensate for moisture loss caused by evaporation and cement hydration and expressed in decimal form

A1.10 Calculate the masses of moist minus No. 4 soil and additional water necessary for a test specimen:

$$m_{sm} = m_s\ (1 + w_f) \quad (11A)$$

$$m_{wa} = m_w - (m_{sm} - m_s) \quad (12A)$$

where:

m_{sm} = mass of moist minus No. 4 soil, lbm
w_f = moisture content of minus No. 4 soil and expressed as a decimal
m_{wa} = mass of additional water, lbm

A1.11 Calculate the total wet mass of soil-cement for one test specimen:

$$m_{tw} = m_c + m_a + m_{sm} + m_{wa} \quad (13A)$$

where m_{tw} equals total wet mass of soil-cement for one test specimen, lbm.

A.1.12 Calculate the masses of moist minus No. 4 soil, cement, and additional water necessary for a test batch equal to 3.5 specimens:

$$B_c = 3.5\ m_c \quad (14A)$$

$$B_{sm} = 3.5\ m_{sm} \quad (15A)$$

$$B_{wa} = 3.5\ m_{wa} \quad (16A)$$

$$B_a = 3.5\ m_a \quad (17A)$$

where:

B_c = mass of cement per batch, lbm
B_{sm} = mass of moist minus No. 4 soil per batch, lbm
B_{wa} = mass of additional water per batch, lbm
B_a = mass of SSD aggregate per batch, lbm

A1.13 Calculate the mass of soil-cement per layer for placement in the mold:

$$\text{Mass of soil-cement per layer, lbm} = \frac{m_{tw}}{3} \quad (18A)$$

A1.14 Follow the main procedure beginning at subparagraph 13.4. Mix the aggregate with the entire batch until the aggregate is distributed uniformly throughout.

A1M. PROCEDURES FOR FORMING COMPRESSIVE STRENGTH SPECIMENS WHEN MATERIAL RETAINED ON THE 4.75-mm SIEVE IS PRESENT (SI SYSTEM)

A1.1 M Sieve an adequate quantity of representative soil on the 25.0-, 19.0-, and 4.75-mm sieves. Discard any aggregate retained on the 25.0-mm sieve. Remove aggregate passing the 25.0-mm sieve and retained on the 19.0-mm sieve, and replace it with an equal mass of aggregate passing the 19.0-mm sieve and retained on the 4.75-mm sieve. Obtain aggregate for replacement from the original sample. Keep the aggregate and the minus 4.75-mm soil in separate containers.

NOTE A1.1 M–This method for making soil-cement compressive strength test specimens is used primarily with soils having 25 percent or less aggregate retained on the 4.75-mm sieve. The plus 19.0-mm soil is replaced in this procedure because 19.0 mm is the maximum allowable particle size in a 76-mm-diameter by 152-mm-high cylindrical specimen.

A1.2 M Determine the specific gravity and absorption of the aggregate in accordance with USBR 5320.

A1.3 M Aggregate used in this procedure must be in an SSD condition (see USBR 5320 and subpar. A1.9).

A1.4 M Convert the laboratory maximum dry unit weight, kN/m³, to laboratory maximum dry density, kg/m³:

$$\rho_{dLabMax} = 101.97\ (\gamma_{dLabMax}) \quad (1M)$$

where:

$\rho_{dLabMax}$ = laboratory maximum dry density of minus 4.75-mm soil-cement, kg/m³
$\gamma_{dLabMax}$ = laboratory maximum dry unit weight of minus 4.75-mm soil-cement, kN/m³
101.97 = conversion from kN/m³ to kg/m³

NOTE A1.2 M–Two values are combined in the 101.97 above conversion. To convert to density (kg/m³), divide the unit weight (kN/m³) by the acceleration of gravity (9.8067 m/s²) and multiply by 1000.

A1.5 M Calculate the theoretical dry density of the composite of the minus 4.75-mm soil-cement at laboratory maximum density—with SSD (saturated surface dry) aggregate added—using the following equation:

$$\rho_o = \frac{1}{\frac{P}{\rho_w\ G_a} + \frac{1 - P}{(\rho_{dLabMax})\ D}} \quad (2M)$$

where:

ρ_o = theoretical dry density of composite of minus 4.75-mm soil-cement and SSD (saturated surface dry) aggregate, kg/m³
P = percent SSD aggregate expressed as a decimal
G_a = specific gravity of aggregate

ρ_w = density of water, 1000 kg/m³
D = desired percentage of laboratory maximum dry density and expressed as a decimal

A1.6 M Calculate the increase in dry density resulting from the addition of aggregate to the soil-cement mixture:

$$\rho_i = \rho_o - [(\rho_{dLabMax})\ D] \quad (3M)$$

where ρ_i equals increase in dry density of soil-cement resulting from the addition of aggregate, kg/m³.

A1.7 M Calculate the dry density of the additional cement required as a result of the increase in dry density:

$$\rho_{ic} = \rho_i\ C \quad (4M)$$

where:
ρ_{ic} = dry density of additional cement required as a result of the increase in dry density, kg/m³
C = design percent cement and expressed as a decimal

A1.8 M Calculate the dry density of the total soil-cement mixture:

$$\rho_t = \rho_o + \rho_{ic} \quad (5M)$$

where ρ_t equals dry density of the total soil-cement mixture, kg/m³.

A1.9 M Calculate the dry mass of soil-cement per test specimen:

$$m_{cyl} = \rho_t\ V \quad (6M)$$

where:
m_{cyl} = dry mass of soil-cement per specimen, kg
V = test cylinder volume, m³

A1.10 M Calculate design masses of minus 4.75-mm dry soil, SSD aggregate, cement, and water for a test specimen:

$$m_{s+a} = \frac{m_{cyl}}{1 + C} \quad (7M)$$

$$m_c = m_{cyl} - m_{s+a} \quad (8M)$$

$$m_s = \frac{m_{s+a}}{1 + P} \quad (9M)$$

$$m_a = m_{s+a} - m_s \quad (10M)$$

$$m_w = (m_c + m_s)\ (w_o + 0.003) \quad (11M)$$

where:
m_{s+a} = dry mass of minus 4.75-mm soil and SSD aggregate, kg
C = design percent cement and expressed as a decimal
m_c = mass of cement, kg
m_s = dry mass of minus 4.75-mm soil, kg
m_a = mass of SSD aggregate, kg
m_w = mass of water, kg
w_o = optimum moisture content and expressed as a decimal
0.003 = percent of additional water required to compensate for moisture loss caused by evaporation and cement hydration and expressed in decimal form

A1.11 M Calculate the masses of moist minus 4.75-mm soil and additional water necessary for a test specimen.

$$m_{sm} = m_s\ (1 + w_f) \quad (12M)$$

$$m_{wa} = m_w - (m_{sm} - m_s) \quad (13M)$$

where:
m_{sm} = mass of moist minus 4.75-mm soil, kg
w_f = moisture content of minus 4.75-mm soil and expressed as a decimal
m_{wa} = mass of additional water to be added, kg

A1.12 M Calculate the total wet mass of soil-cement for one test specimen.

$$m_{tw} = m_c + m_a + m_{sm} + m_{wa} \quad (14M)$$

where m_{tw} equals total wet mass of soil-cement for one test specimen, kg.

A1.13 M Calculate the masses of moist minus 4.75-mm soil, cement, and additional water necessary for a test batch equal to 3.5 specimens.

$$B_c = 3.5\ m_c \quad (15M)$$

$$B_{sm} = 3.5\ m_{sm} \quad (16M)$$

$$B_{wa} = 3.5\ m_{wa} \quad (17M)$$

$$B_a = 3.5\ m_a \quad (18M)$$

where:
B_c = mass of cement per batch, kg
B_{sm} = mass of moist minus 4.75-mm soil per batch, kg
B_{wa} = mass of additional water per batch, kg
B_a = mass of SSD aggregate per batch, kg

A1.14 M Calculate the mass of soil-cement per layer for placement in the mold.

$$\text{Mass of soil-cement per layer, kg} = \frac{m_{tw}}{3} \quad (19M)$$

A1.15 M Follow the main procedure beginning at subparagraph 13.4. Mix the aggregate with the entire batch until the aggregate is distributed uniformly throughout.

UNITED STATES DEPARTMENT OF THE INTERIOR
BUREAU OF RECLAMATION

USBR 5806-89

PROCEDURE FOR

PREPARING SOIL-CEMENT SPECIMENS FOR COMPRESSIVE STRENGTH TESTING FOR CONSTRUCTION CONTROL

INTRODUCTION

This procedure is under the jurisdiction of the Geotechnical Services Branch, code D-3760, Research and Laboratory Services Division, Denver Office, Denver, Colorado. The procedure is issued under the fixed designation USBR 5806. The number immediately following the designation indicates the year of acceptance or the year of last revision.

This procedure is similar to ASTM D 1632, except that this procedure contains a rewritten and more detailed description and includes USBR data forms, and its application for construction control. Corresponding forms in SI units are included. The SI forms have the letter M following the first digit in the form number.

1. Scope

1.1 This designation outlines the procedure for making and curing soil-cement specimens for unconfined compressive strength testing for construction control.

2. Auxiliary Tests

2.1 The fill (in-place compacted) wet unit weight of the soil-cement must be determined in accordance with USBR 7205 or 7206 so that compression test specimens can be placed at the fill wet unit weight.

3. Applicable Documents

3.1 *USBR Procedures*:
USBR 1009 Calibrating Compaction Molds
USBR 3900 Standard Definitions of Terms and Symbols Relating to Soil Mechanics
USBR 5810 Performing Compressive Strength Testing of Soil-Cement Cylinders
USBR 5830 Performing Construction Control of Soil-Cement
USBR 7205 Determining Unit Weight of Soils In-Place by the Sand-Cone Method
USBR 7206 Determining Unit Weight of Soils In-Place by the Rubber Balloon Method

3.2 *ASTM Standards*:
C 511 Specification for Moist Cabinets, Moist Rooms, and Water Storage Tanks Used in the Testing of Hydraulic Cements and Concretes
D 1632 Specification for Making and Curing Soil-Cement Compression and Flexure Test Specimens in the Laboratory
E 11 Specification for Wire-Cloth Sieves for Testing Purposes

4. Summary of Method

4.1 Molded cylindrical specimens of compacted soil-cement are tested after curing to determine the unconfined compressive strength of the material for construction control and record purposes. The compression test specimens are compacted to the fill wet unit weight of the soil-cement structure as constructed. Six specimens are prepared so that one specimen can be tested at 3 days, two specimens at 7 days, two specimens at 28 days, and one specimen at 90 days. Each specimen is prepared by placing the soil-cement mixture in a mold in three equal layers. Each layer is rodded to a height of about 2 inches (50 mm). Then, the specimen is compacted with a dropping-weight compacting machine (fig. 1) to the fill wet unit weight. The specimens are cured in a high-humidity environment for a minimum of 12 hours and then are extruded from the mold. After extrusion, the specimens are kept in a high-humidity environment for the specified curing time prior to compression testing.

5. Significance and Use

5.1 Soil-cement unconfined compressive strength testing is performed during construction of a soil-cement structure to determine the rate of strength gain and to ensure that the soil-cement is gaining adequate strength with age.

5.2 Minimum acceptable soil-cement compressive strength values of 600 lbf/in^2 (4100 kPa) at 7 days and 875 lbf/in^2 (6000 kPa) at 28 days have been established, by the Bureau, based on satisfactory field performance of existing soil-cement structures.

6. Terminology

6.1 Definitions are in accordance with USBR 3900.

6.2 Terms not included in USBR 3900 specific to this designation are:

6.2.1 *Cement Content.*–Amount of cement in a soil-cement mixture, specified as a percent of dry soil mass.

6.2.2 *Soil-Cement Moisture Content.*–Ratio of the mass of water to the total dry mass of a soil-cement mixture, expressed as a percent.

7. Apparatus

7.1 *General Apparatus*:

7.1.1 *Balance or Scale.*–A balance or scale used for this designation must be readable to 0.01 lbm and have a capacity of about 25 lbm.

7.1.2 *Sieves.*–U.S.A. Standard series 3/4 inch (19.0 mm) and No. 4 (4.75 mm) sieves, conforming to the requirements of ASTM E 11.

7.1.3 *Tamping Rod.*–A round-nosed 1/2- or 5/8-inch (13- or 16-mm) diameter, smooth steel rod about 20 inches (510 mm) long.

7.1.4 *Moist Room or Water Bath.*–A moist room or water bath capable of maintaining a uniform temperature of 73.4±3.0 °F (23.0±1.7 °C) and a relative humidity of not less than 95 percent, conforming to the requirements of ASTM C 511.

7.2 *Equipment Unique to This Procedure*:

7.2.1 *Dropping-Weight Compacting Machine.*–A controlled dropping-weight device of 15 lbm (6.8 kg) for striking the top piston (figs. 1 and 2). Shop drawings are available upon request from the Denver Office. Ensure that the compacting machine rests firmly on a level, uniformly rigid foundation, equivalent to a 200-lbm (90 kg) cylinder of concrete.

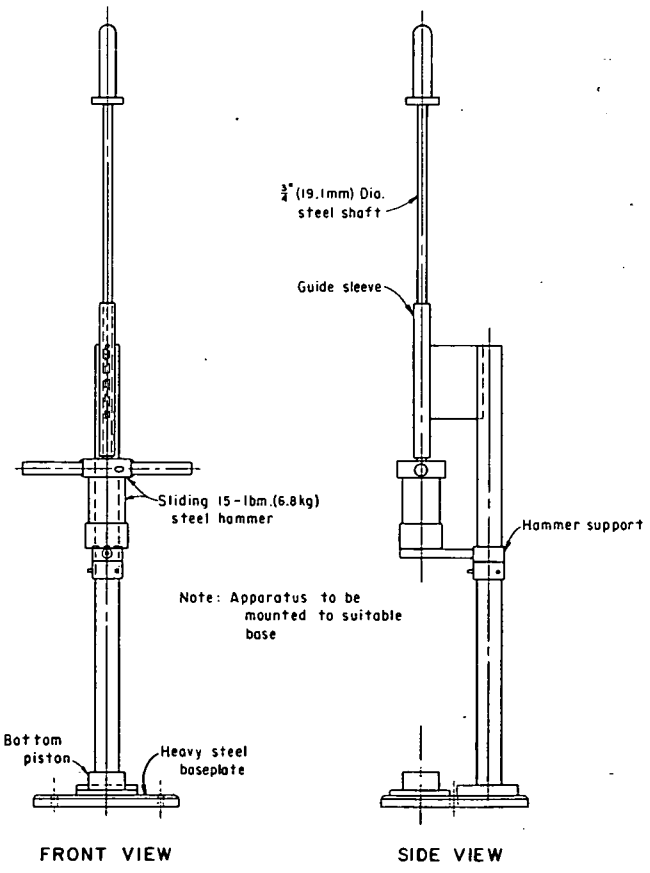

Figure 1. – Dropping-weight compacting machine.

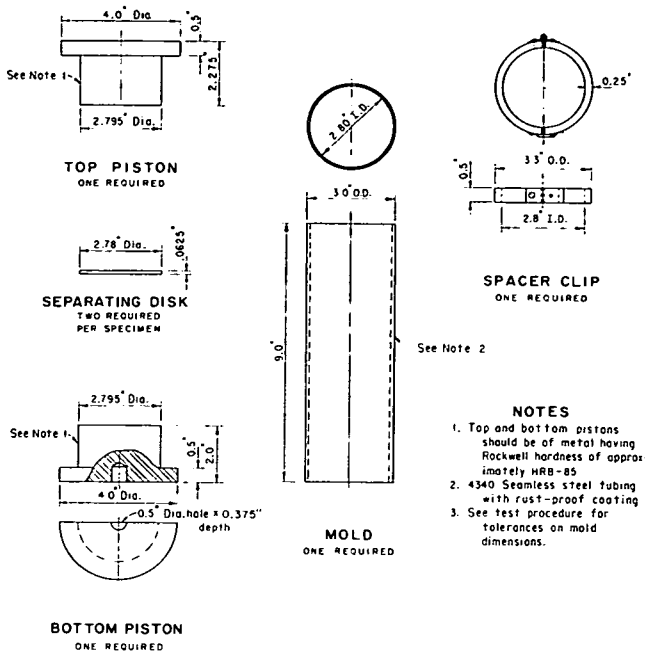

Figure 2. – Soil-cement compressive strength mold assembly.

7.2.2 *Compression Test Specimen Molds* (fig. 2):

7.2.2.1 Molds having an inside diameter of 2.80±0.01 inch (71.12±0.25 mm) and a height of 9.00± 0.01 inch (229±0.25 mm) for molding test specimens 2.80±0.01 inch (71.12±0.25 mm) in diameter and 5.60±0.01 inch (142±0.25 mm) high. Satisfactory molds may be made from 4340 cold-drawn, seamless steel tubing having a rustproof coating.

7.2.2.2 Machined steel top and bottom pistons having a diameter 0.005 inch (0.13 mm) less than the mold inside diameter.

7.2.2.3 A spacer clip.

7.2.2.4 Two aluminum separating disks 1/16-inch (1.6-mm) thick by 2.78 inches (70.6 mm) in diameter for each test specimen.

7.2.3 *Compressive Strength Test Specimen Extruder.*–Consisting of a piston, jack, and frame for extruding soil-cement specimens from the mold.

7.2.4 *Funnel.*–To facilitate filling the 2.80-inch (71.1-mm) diameter molds with soil-cement.

7.3 *Miscellaneous Equipment*:

7.3.1 Miscellaneous mixing tools such as a large mixing pan and trowel.

7.3.2 Spatula for distributing soil-cement along the inside of the mold.

7.3.3 Damp towels to keep test specimens moist.

7.3.4 Tags for labeling molds.

7.3.5 Waterproof markers to label test specimens.

7.3.6 Vegetable oil spray or commercial lubricating oil to prevent soil-cement from adhering to the mold.

7.3.7 Moisture-proof container suitable for transporting fresh soil-cement from the construction site to the laboratory.

8. Precautions

8.1 *Safety Precautions*:

8.1.1 This designation may involve hazardous materials, operations, and equipment.

8.1.2 Exercise care to protect hands from drying and abrasive properties of cement.

8.2 *Technical Precautions*:

8.2.1 To minimize the effects of cement hydration and evaporation, perform the test expeditiously and continuously to completion.

8.2.2 Laboratory compacted soil-cement test specimens are very fragile and special care should be taken in preparation, handling, and transportation to prevent damage.

8.2.3 When extruding a test specimen from the mold, maintain a slow, constant rate of extrusion. Fractures can occur in the specimen if the extrusion process is not conducted with care.

9. Sampling, Test Specimens, and Test Units

9.1 The compressive strength is to be determined at least once for every 500 yd^3 (400 m^3) of soil-cement placed, a minimum of once per shift if less than 500 yd^3 are placed, or in questionable areas.

9.2 Place a representative sample of about 50 lbm (23 kg) of fresh soil-cement in a moisture-proof container to prevent moisture loss while transporting to the laboratory. Every precaution should be observed in obtaining samples that are truly representative of the nature and condition of the soil-cement. Refer to USBR 5830 for sampling procedures.

9.3 The elapsed time between obtaining the fresh soil-cement sample and preparing the test specimens should be as short as possible; do not exceed 45 minutes.

9.4 Pass the sample through a U.S.A. Standard series 3/4-inch (19.0-mm) sieve. Discard any aggregate retained on the 3/4-inch (19.0-mm) sieve.

NOTE 1.–This method for making soil-cement compressive strength test specimens is used primarily with soils having 25 percent or less aggregate retained on the No. 4 sieve. The 3/4-inch (19.0-mm) aggregate is the maximum allowable particle size in a 3-inch-diameter by 6-inch-high (75- by 152-mm) cylindrical specimen.

10. Calibration and Standardization

10.1 Verify that equipment is currently calibrated in accordance with the applicable calibration procedure. If the calibration is not current, perform the calibration before using the equipment for this procedure.

10.2 Calibrate compressive strength test specimen molds in accordance with USBR 1009.

11. Conditioning

11.1 Place the soil-cement sample obtained in subparagraph 9.2 into a moisture-proof container to prevent moisture loss.

11.2 Cure the test specimen in the mold in a high-humidity environment for the time specified in subparagraph 12.9 before extruding from the mold.

11.3 After extrusion from the mold, cure the test specimen in a high-humidity environment for the specified moist curing period.

12. Procedure

12.1 All data are to be recorded on the "Soil-Cement Test Cylinder Break Card" form shown on figure 3A (in-lb units) or 3B (SI units).

12.2 Prepare six specimens individually so that one each can be tested at 3 and 90 days and two each can be tested at 7 and 28 days.

12.3 Calculate the quantity of uniformly mixed soil-cement necessary to produce a specimen at the fill wet unit weight as determined by USBR 7205 or 7206.

12.4 Lightly spray the inside of the mold and both sides of two separating disks with vegetable oil or commercial lubricating oil. Place a separating disk on the top of the bottom piston. Place the spacer clip over the bottom piston. Place the mold over the bottom piston and on top of the spacer clip so that the bottom piston extends about 1 inch (25 mm) into the mold.

12.5 Place the funnel on top of the mold.

12.6 Using the funnel, place the first layer of soil-cement in the mold. Carefully spade the mixture around the mold sides with a thin spatula. Compact the layer of soil-cement by steadily and firmly forcing (with little impact) the round-nosed tamping rod repeatedly through the mixture from the top down to the point of refusal. Distribute the rodding uniformly over the cross section of the mold. Continue rodding until the layer is packed to a height of about 2 inches (50 mm). Repeat the process until the mixture has been placed in the required three layers and is packed to a height of about 6 inches (150 mm) above the top of the bottom piston or to about 2 inches (50 mm) below the top of the mold.

12.7 Place a separating disk on the surface of the soil-cement. Remove the spacer clip supporting the mold on the bottom piston. Place the top piston in the mold. Apply a dynamic load with the dropping-weight compacting machine until the specimen is 5.67 inches (142 mm) high. Six to eight blows with the compacting machine should bring the specimen to the proper height. The proper height of the specimen is obtained when the flanges of both the top and bottom pistons come into contact with the mold.

NOTE 2.–If more than ten blows are required, the rodding performed in subparagraph 12.6 was insufficient and the specimen is to be discarded. The process of rodding each layer aids in achieving a uniform unit weight throughout the specimen. An excessive number of blows with the compacting machine creates a higher unit weight on the ends of the specimen than in the middle of the specimen. A uniform unit weight throughout the specimen is critical for accurate compressive strength test results.

12.8 Remove the pistons from the mold assembly—leaving the specimen and separating disks in the mold.

Label the mold and record on the "Soil-Cement Test Cylinder Break Card" form of figure 3A or 3B.

12.9 Cure the specimen, in the mold, in a high-humidity environment for 12 hours or longer, if required, before extruding from the mold.

12.10 To assist in removal of the specimen from the mold, spray a lubricant such as a vegetable oil or a commercial lubricating oil inside the ends of the mold and in the collar of the extruder. Remove the specimen from the mold using a suitable extruder. To prevent damage to the specimen, maintain a slow, constant rate of extrusion (approximately 12 in/min). Fractures can occur in the specimen if the extrusion process is not conducted with care. Keep test specimens covered with damp (not wet) towels until placed in a high-humidity environment.

12.11 Label and place the specimens in an upright position in a moist room or a water bath to provide a high-humidity curing environment (note 3). Protect the specimens from dripping or running water for the specified moist curing period. If specimens are stored in a moist room, do not leave the specimens in pans or containers that will collect water.

NOTE 3.–Care must be taken when transporting the test specimens. The specimens are very susceptible to breakage at this time.

13. Calculations

13.1 Calculate the mass of soil-cement required to produce a compressive strength test specimen at the fill wet unit weight using the following equations:

13.1.1 *Inch-Pound Units*: Convert unit weight to density by changing lbf/ft³ to lbm/ft³ (see note 4).

$$m = \rho_w V \quad (1)$$

where:

m = mass required for test specimen, lbm
ρ_w = wet unit weight of soil-cement converted to density, lbm/ft³
V = volume of mold, ft³

NOTE 4.–For this application, a 1-pound mass is considered to be numerically equal to a 1-pound force.

13.1.2 *SI Units*:

$$m = 101.97\ \gamma_w V \quad (2)$$

where:

m = mass required for test specimen, kg
γ_w = wet unit weight of soil-cement, kN/m³
V = volume of mold, m³
101.97 = conversion from kN/m³ to kg/m³

NOTE 5.–Two values are combined in the constant. To convert from unit weight, kN/m³, to density, kg/m³, divide by the acceleration of gravity (9.8067 m/s²) and multiply by 1000.

13.2 Divide the total mass required for each test specimen by 3 to determine the mass required for each lift.

14. Report

14.1 The report is to consist of a completed "Soil-Cement Test Cylinder Break Card" form (fig. 3A or 3B).

14.2 All calculations are to show a checkmark.

7-2149 (6-85)
Bureau of Reclamation

SOIL–CEMENT
TEST CYLINDER BREAK CARD

Designation USBR 5806- 8 9 Auxiliary Tests: USBR 7205- 8 9, USBR 7206- __ __

Feature: Example Structure: 3:1 Slope of Dam Face

Test No. or Location 10-23-A-1 Date Placed: 10-23-89 Shift: A Time: 3:00 PM

Mold Volume: 0.0200 ft^3 Fill Unit Weight: 136.0 lbf/ft^3

D-Value: 99.0 % Cement Content: 11.2 % Loading Rate: 30 $lbf/in^2/S$

Specimen number	Age (days)	Break Date	Average Length(L) (in)	Average Dia (D) (in)	L/D	Load at Failure (lbf)	Area (in^2) $A = \frac{\pi D^2}{4}$	Compressive Strength (lbf/in^2) $q_u = \frac{Load}{A}$	Prepared By	Tested By	Checked By
1	3	10-26-89							JKL		
2	7	10-30-89							JKL		
3	7	10-30-89							JKL		
4	28	11-20-89							RST		
5	28	11-20-89							RST		
6	90	1-21-90							RST		

Remarks on Reverse Side

Figure 3A. - Soil-cement test cylinder break card (in-lb example).

7m-2149 (6-85)
Bureau of Reclamation

SOIL–CEMENT
TEST CYLINDER BREAK CARD

Designation USBR 5806- 8 9 Auxiliary Tests: USBR 7205- 8 9, USBR 7206- __ __

Feature: Example Structure: 3:1 Slope of Dam Face

Test No. or Location: 2-22-A-1 Date Placed: 2-22-89 Shift: A Time: 3:30 PM

Mold Volume: 5.63×10^{-4} m^3 Fill Unit Weight: 20.0 kN/m^3
(to convert from cm^3 to m^3, divide by 10^6)

D-Value: 98.9 % Cement Content: 12.0 % Loading Rate: 0.20 MPa/s

Specimen number	Age (days)	Break Date	Average Length(L) (mm)	Average Dia (D) (mm)	L/D	Load at Failure (N)	Area(mm^2) $A = \frac{\pi D^2}{4}$	Compressive Strength(kPa) $(q_u) = \frac{Load}{A} \times 10^3$	Prepared By	Tested By	Checked By
1	3	2-25-89							CED		
2	7	3-01-89							CED		
3	7	3-01-89							CED		
4	28	3-22-89							CED		
5	28	3-22-89							CED		
6	90	5-23-89							CED		

Remarks on Reverse Side

Figure 3B. - Soil-cement test cylinder break card (SI example).

UNITED STATES DEPARTMENT OF THE INTERIOR
BUREAU OF RECLAMATION

USBR 5807-89

PROCEDURE FOR

PREPARING AND TESTING SOIL-CEMENT SLURRY TEST CYLINDERS

INTRODUCTION

This procedure is under the jurisdiction of the Geotechnical Services Branch, code D-3760, Research and Laboratory Services Division, Denver Office, Denver, Colorado. The procedure is issued under the fixed designation USBR 5807. The number immediately following the designation indicates the year of acceptance or the year of last revision.

1. Scope

1.1 This designation outlines the procedure for preparing and testing cylindrical specimens of soil-cement slurry to determine compressive strength.

1.2 This method may also be used to prepare and test specimens of other slurry mixtures of soil and cementitious materials, such as certain fly ashes.

2. Auxiliary Tests

2.1 The soil-cement slurry cylinders are capped in accordance with USBR 4617 or ASTM C 617 prior to compressive strength testing.

3. Applicable Documents

3.1 *USBR Procedures*:
USBR *1104 Load Verification of Testing Machines
USBR 3900 Standard Definitions of Terms and Symbols Relating to Soil Mechanics
USBR *4192 Making and Curing Concrete Test Specimens in Laboratory
USBR *4617 Capping Cylindrical Concrete Specimens
USBR 5810 Performing Compressive Strength Testing of Soil-Cement Cylinders

3.2 *ASTM Standards*:
C 192 Making and Curing Concrete Test Specimens in the Laboratory
C 470 Specification for Molds for Forming Concrete Test Cylinders Vertically
C 617 Capping Cylindrical Concrete Specimens

4. Summary of Method

4.1 Cylinders of soil-cement slurry are tested to determine the compressive strength of the material. The cylinders are prepared by pouring a representative sample of the slurry into molds, curing the cylinders, removing the cylinders from the molds, and capping the cylinders for compression testing. The cylinders are then tested to obtain compressive strengths, typically 7 days after the cylinders are prepared. Duplicate cylinders are required.

5. Significance and Use

5.1 This method is used to prepare and test cylindrical specimens of soil-cement slurry to determine the compressive strength of the hardened slurry.

5.2 Soil-cement slurry is typically used as a backfill material around structures, particularly in confined or limited spaces. The main use has been as pipe bedding. When it is used to transfer structural loads to the surrounding soil as in pipe bedding a minimum compressive strength of test cylinders of a given age is generally specified in the contract documents. Compressive strength testing is performed to assist in the design of the soil-cement slurry mix and to serve as a control technique during construction.

6. Terminology

6.1 Definitions are in accordance with USBR 3900. Terms of particular significance are:

6.1.1 *Soil-Cement.*–A mixture of soil, portland cement, and water that (as the cement hydrates) forms a material with a higher strength than the untreated soil. Depending on the amount of water used, it can be placed as a compacted material, as a mortar, or as a slurry.

6.1.2 *Soil-Cement Slurry.*–Soil-cement with a moisture content such that it has the consistency of a thick liquid.

7. Apparatus

7.1 *Single-Use Cylindrical Molds.*–Plastic single-use 6-inch diameter by 12-inch high molds (152-mm diameter by 305-mm high) that conform to ASTM C 470.

7.2 *Testing Machine.*–Any type having sufficient load capacity and strain control to provide the rate of loading prescribed in subparagraphs 10.1 and 14.3. The testing machine should be equipped with two steel bearing blocks with hardened faces (see note 1), one of which is a spheri-

* *Concrete Manual*, Bureau of Reclamation, part 2, in press.

cally seated headblock that normally will bear on the upper surface of the specimen and the other a plain rigid block on which the specimen will rest. The diameter of the bearing surfaces should be as large and preferably slightly larger than the diameter of the test specimen. The bearing faces, when new, should not depart from plane by more than 0.0005 inch (0.013 mm) at any point, and should be maintained within a permissible variation limit of 0.001 inch (0.025 mm). The bearing faces should be perpendicular to the axis of loading of each bearing block. In the spherically seated block, the diameter of the sphere should not greatly exceed the diameter of the specimen. The center of the bearing face should coincide with the center of the sphere. The moving portion of this block should be held closely in the spherical seat, but the design should be such that the bearing face can be rotated freely and tilted through small angles in any direction. This is necessary to prevent eccentric loading conditions on the test specimen.

NOTE 1.–It is desirable that the bearing faces of blocks used for compression testing of soil-cement slurry specimens have a Rockwell C-scale hardness number greater than 60.

7.3 *Sampling and Mixing Receptacle.*–The receptacle should be a suitable heavy-gage metal pan, wheelbarrow, etc., of sufficient capacity to allow easy sampling and mixing of the slurry and to allow for preparation of at least two cylinders.

7.4 *Storage Container.*–A tightly constructed, firmly braced wooden box with a cover or other suitable container for storage of the soil-cement slurry cylinders at the construction site. It should be marked for identification and should be a bright color to avoid disturbance.

7.5 *Transportation Container.*–A sturdy wooden box or other suitable container constructed to minimize shock, vibration, or damage to the soil-cement slurry cylinders when transported to the laboratory.

7.6 *Curing Environment.*–A curing environment (water bath, damp sand, fog room) that meets the requirements of USBR 4192 or ASTM C 192. The soil-cement slurry cylinders are to be cured in the same curing environment used for concrete cylinders at the laboratory performing the testing.

7.7 *Small Tools.*–Tools and items such as shovels, pails, trowels, and scoops.

8. Precautions

8.1 *Safety Precaution*:

8.1.1 The safety precautions stated in USBR 4617 or ASTM C 617 are to be strictly observed.

8.1.2 When capping the cylinders with molten sulfur mortar, proper personal protective equipment, including gloves with cuffs at least 6 inches (150 mm) long, are to be worn.

8.2 *Technical Precaution.*–The procedure for preparation of soil-cement slurry cylinders has many similarities to preparing concrete cylinders. However, the soil-cement slurry cylinders are more fragile than concrete cylinders, and special care should be taken in their preparation, storage, and handling.

9. Sampling, Test Specimens, and Test Units

9.1 The sample from the soil-cement slurry batch should be a minimum of 1 ft^3 (0.03 m^3) for each cylinder to be prepared. Prepare a minimum of two compressive strength cylinders to represent each sampled batch.

NOTE 2.–In the initial stage of soil-cement slurry usage, preparation of three cylinders is recommended to obtain reliable compressive strength data. Subsequently, two cylinders may be used to maintain testing records and to ascertain an overall quality of the mix. However, since the soil-cement slurry cylinders are fragile and may be damaged during transportation, mold removal, and capping, preparation of an extra cylinder may be necessary to provide the minimum number of test specimens (see notes 3 and 4).

9.2 When soil-cement slurry is used for pipe bedding, the compressive strength is to be determined at least once for every 500 linear feet (or 150 linear meters) of pipe placed, or at least twice per shift. The testing frequency should be increased in the initial stage of any soil-cement slurry usage and maintained until routine construction procedures and consistent test results are established.

9.3 The procedures used in sampling the slurry should include use of every precaution to ensure that samples are truly representative of the nature and condition of the soil-cement slurry. Protect the sample obtained from sun, wind, and other sources of rapid evaporation, and from contamination.

9.4 Keep the elapsed time between obtaining the sample and preparing the test specimens as short as possible—not to exceed 15 minutes.

9.5 In sampling from revolving drum truck mixers or agitators, sample the soil-cement slurry during discharge of the middle portion of a batch. Do not obtain samples from the very first or last portions of the batch discharge. In any case, do not obtain samples until after all water has been added to the mixer. Sample by completely diverting the discharge into the sampling and mixing receptacle.

10. Calibration and Standardization

10.1 Verify that the testing machine conforms to the requirements of and is calibrated in accordance with USBR 1104. Since the soil-cement slurry will have a typical range of compressive strength of 50 to 200 lbf/in^2 (350 to 1400 kPa) at 7 days, the testing machine must be equipped to provide a suitable load range and must be calibrated for that load range.

11. Conditioning

11.1 As part of the preparation of the soil-cement slurry cylinders for compressive strength testing, the cylinders are to remain in a storage container at the job site for 4 days and then placed in a curing environment until the day they are to be tested.

12. Procedure — Molding Specimens and Curing

12.1 *Place of Molding.*-Find a level, rigid, horizontal surface, free from vibration and other disturbances, on which to mold the specimens. The specimens should be prepared at a place as near as practicable to the location where they are to be stored during the first 4 days.

12.2 *Placing the Slurry*:

12.2.1 Thoroughly mix the slurry sample (obtained in accordance with par. 9) in the sampling and mixing receptacle.

12.2.2 With a bucket, scoop through the center portion of the sample, and pour the slurry into the cylinder mold. Repeat until the mold is full.

12.2.3 For some slurry mixtures, free water will appear at the top of the specimen in the mold. After a few minutes, thoroughly mix the slurry in the sampling and mixing receptacle and place a scoopful of the slurry in the top of the mold—displacing the water. A slight mound of material should be left on the top of the specimen, if possible. This refilling may be required again after about 15 minutes. Leave the mound on the top of the specimen in the mold.

12.3 *Curing*:

12.3.1 Store the cylinders at the construction site in the storage container until the fourth day after preparation.

12.3.2 On the fourth day, transport the cylinders to the site of the curing environment in the transportation container and place in the curing environment. The curing environment (water bath, damp sand, fog room) is to be the same as used for concrete cylinders at the laboratory performing the compressive testing. The curing environment shall conform to the requirements of USBR 4192 or ASTM C 192.

13. Procedure — Capping

13.1 Carefully remove the molds from the cylinders and allow the cylinders to air-dry for 4 to 8 hours before capping. The cylinders are to be capped in accordance with USBR 4617 or ASTM C 617. If the upper surface of the cylinder is not a horizontal plane, use a wire brush to flatten the surface. Brush off all loose particles.

NOTE 3.-Soil-cement slurry cylinders are more fragile than concrete cylinders and must be handled carefully during the mold removal and during capping.

NOTE 4.-Oil is placed on the capping plate to ensure release of the capping material from the capping plate. More oil may be required on the capping plate when capping soil-cement slurry cylinders than is normally used when capping concrete cylinders. Capped soil-cement cylinders will normally contain more air voids between the cap and the cylinder than capped concrete cylinders, and this should be considered if the caps are tapped to check for voids.

14. Procedure — Testing

14.1 All data are to be recorded on the "Soil-Cement Test Cylinder Break Card" form as shown on figure 1.

7-2149 (6-85)
Bureau of Reclamation

SOIL–CEMENT
TEST CYLINDER BREAK CARD

Designation USBR 5807- 8 9 Auxiliary Tests: ASTM C 617 ___ ___, USBR 7206- ___ ___

Feature: Example Structure: _____

Test No. or Location _____ Date Placed: _____ Shift: _____ Time: _____

Mold Volume: _____ ft^3 Fill Unit Weight: _____ lbf/ft^3

D-Value: N.A. % Cement Content: 11.4 % Loading Rate: 30 $lbf/in^2/S$

Specimen number	Age (days)	Break Date	Average Length (L) (in)	Average Dia (D) (in)	L/D	Load at Failure (lbf)	Area (in^2) $A = \frac{\pi D^2}{4}$	Compressive Strength (lbf/in^2) $q_u = \frac{Load}{A}$	Prepared By	Tested By	Checked By
4-2A	7	4-9-89	12	6	2	2910	28.27	103			
4-2B	7	4-9-89	12	6	2	3320	28.27	117			
4-2C	7	4-9-89	12	6	2	3190	28.27	113			

Remarks on Reverse Side

Figure 1. - Soil-cement test cylinder break card — example. This example shows the front of a card (form) having a blank reverse side. The card is available from the Denver Office..

NOTE 5.–This form is normally used in conjunction with USBR 5810. With slight modifications, it may be used for this designation as illustrated on figure 1.

14.2 *Placing the Specimen.*–Place the lower bearing block, with its hardened face up, on the table or platen of the testing machine directly under the spherically seated (upper) bearing block. Wipe clean the bearing faces of the upper and lower bearing blocks and of the test specimen, and place the test specimen on the lower bearing block. Carefully aline the axis of the specimen with the center of thrust of the spherically seated block. As the spherically seated block is brought to bear on the top of the specimen, rotate its movable portion gently by hand so that uniform seating is obtained.

14.3 *Rate of Loading.*–Apply the load continuously and without shock. Apply the load at a constant rate within the range of 30±10 lbf/in² per second (200±70 kPa/s). During the application of the first half of the anticipated maximum load, a higher rate of loading may be permitted. Make no adjustment in the controls of the testing machine while a specimen is yielding rapidly immediately before failure.

14.4 *Failure.*–Apply the load until the specimen fails, and record the maximum load carried by the specimen during the test. Note the type of failure and the appearance of the soil-cement slurry specimen. For about 1 out of every 10 cylinders, continue the loading until the cylinder breaks enough to examine the appearance of the interior of the specimen. Note any apparent segregation, lenses, pockets, etc., in the specimen.

14.5 *Compressive Strength.*–Calculate and record the compressive strength of the specimen. Express the result to the closest division mark readable on the testing machine dial.

15. Calculations

15.1 Calculate the compressive strength.

$$\text{Compressive strength} = \frac{\text{maximum load, lbf or kN}}{\frac{\pi D^2}{4}}$$

where D equals nominal diameter of cylinder [normally 6 inches (152 mm)].

16. Report

16.1 The report is to consist of a completed and checked "Soil-Cement Test Cylinder Break Card" (fig. 1).

16.2 All calculations are to show a checkmark.

16.3 For reports on pipe bedding, a form (see fig. 2) should be used for the Bureau's monthly Construction Progress Report (L-29).

SOIL-CEMENT SLURRY PIPE BEDDING

PROJECT: Example. SHEET 1 of 1

FEATURE: Example Report No. 4

SPECIFICATIONS NO. FOR THE MONTH OF April 19 89

DAY	MONTH	YEAR	Station	Linear feet Represented	GRADATION % PASSING 3/8 inch	No. 4	No. 100	No. 200	SOIL CLASS SYMBOL	SPECIFIC GRAVITY	CUBIC YARDS	BATCHED lbm/yd³ TOTAL WATER	CEMENT	DRY SOIL	W/C ratio	% Cement (by dry mass)	Placement Temp. °C	7-DAY COMPRESSIVE STRENGTH (lbf/in²) Specimen No. 1	Specimen No. 2	Specimen No. 3
6	4	89	219+83	325	100	99	6	2	--	2.72	117	643	287	2513	2.24	11.4	21	176	173	171
6	4	89	220+10	121	100	99	6	2	--	----	117	685	286	2511	2.40	11.4	24	132	141	Void in Cyl.
7	4	89	220+50	131	100	99	7	3	--	2.70	136	706	288	2533	2.45	11.4	22	145	132	90*
8	4	89	221+44	72	100	100	6	2	--	----	85	707	288	2485	2.45	11.6	27	155	173	182

*Defect in cylinder

CEMENT: BRAND: Example TYPE: II SOURCE: Example

Figure 2. – Soil-cement slurry pipe bedding — monthly report example.

UNITED STATES DEPARTMENT OF THE INTERIOR
BUREAU OF RECLAMATION

USBR 5810-89

PROCEDURE FOR

PERFORMING COMPRESSIVE STRENGTH TESTING OF SOIL-CEMENT CYLINDERS

INTRODUCTION

This procedure is under the jurisdiction of the Geotechnical Services Branch, code D-3760, Research and Laboratory Services Division, Denver Office, Denver, Colorado. The procedure is issued under the fixed designation USBR 5810. The number immediately following the designation indicates the year of acceptance or the year of last revision.

This procedure is similar to ASTM D 1633, except that this procedure contains a rewritten and more detailed description and includes USBR data forms. Corresponding forms in SI units are included. The SI forms have the letter M following the first digit in the form number.

1. Scope

1.1 This designation outlines the procedure for performing compressive strength testing of soil-cement, using either laboratory-compacted or field-cored cylinders as test specimens.

2. Auxiliary Tests

2.1 The laboratory-compacted soil-cement cylinders must be prepared in accordance with USBR 5805 or 5806. The field-cored, soil-cement cylinders must be obtained in accordance with USBR 5835. The soil-cement cylinders must be capped in accordance with USBR *4617 or ASTM C 617 prior to compressive strength testing.

3. Applicable Documents

3.1 *USBR Procedures*:
USBR *1104 Load Verification of Testing Machines
USBR 3900 Standard Definitions of Terms and Symbols Relating to Soil Mechanics
USBR *4617 Capping Cylindrical Concrete Specimens
USBR 5805 Preparing Soil-Cement Specimens for Compressive Strength Testing for Mix Designs
USBR 5806 Preparing Soil-Cement Specimens for Compressive Strength Testing for Construction Control.
USBR 5820 Performing Wet-Dry Durability Testing of Compacted Soil-Cement Mixtures.
USBR 5825 Performing Freeze-Thaw Durability Testing of Compacted Soil-Cement Mixtures.
USBR 5835 Performing Record Coring and Cross Sectioning of Compacted Soil-Cement

3.2 *ASTM Standards*:
C 511 Specification for Moist Cabinets, Moist Rooms, and Water Storage Tanks Used in the Testing of Hydraulic Cements and Concrete.
C 617 Specification for Capping Cylindrical Concrete Specimens.
D 1633 Specification for Compressive Strength of Molded Soil-Cement Cylinders

4. Summary of Method

4.1 Laboratory-compacted or field-cored cylindrical soil-cement specimens are loaded in compression to failure. The load at failure divided by the cross-sectional area is the compressive strength. Laboratory-compacted specimens are tested at 3, 7, 28, and 90 days; field-cored specimens are tested at 28, 90, and 360 days, and thereafter as necessary.

5. Significance and Use

5.1 Soil-cement compressive strength testing is performed to determine the unconfined compressive strength of compacted soil-cement mixtures.

5.2 The unconfined compressive strength test is one of a series of tests normally performed to evaluate the adequacy of compacted soil-cement. Other tests include wet-dry durability (USBR 5820) and freeze-thaw durability (USBR 5825).

5.3 Laboratory-compacted soil-cement specimens are tested to determine the cement content to be specified in a soil-cement mix design. Based on satisfactory performance of existing soil-cement structures, Bureau criteria require minimum unconfined compressive strength values of 600 lbf/in² (4100 kPa) at 7 days and 875 lbf/in² (6000 kPa) at 28 days. Unconfined compressive strength testing is conducted prior to durability testing to eliminate mix designs that do not meet compressive strength criteria. An economical mix design uses the minimum cement

* *Concrete Manual*, Bureau of Reclamation, part 2, in press.

content that meets both strength and durability requirements.

5.4 Compressive strength tests are also conducted on laboratory-compacted and field-cored specimens during construction of the compacted soil-cement structure for construction control and record purposes. Compressive strength tests are performed to ensure that the soil-cement meets compressive strength criteria.

6. Terminology

6.1 Definitions are in accordance with USBR 3900.

6.2 A term not included in USBR 3900 specific to this designation is:

6.2.1 *Cement Content.*–Amount of cement in a soil-cement mixture, specified as a percent of dry soil mass.

7. Apparatus

7.1 *General Apparatus*:

7.1.1 *Compression Testing Machine.*–Any type machine having sufficient load capacity and strain control to provide the rate of loading prescribed in subparagraph 12.4.2. The testing machine should be equipped with two steel bearing blocks with hardened faces (see note 1), of which one is a spherically seated headblock that normally bears on the upper surface of the specimen, and the other a rigid block on which the specimen rests. The diameter of the bearing surfaces should be at least as large and preferably slightly larger than the surface of the test specimen. The bearing faces, when new, should not depart from plane by more than ±0.0005 inch (0.013 mm) at any point, and should be maintained within a permissible variation limit of 0.001 inch (0.02 mm). In the spherically seated block, the diameter of the sphere should not greatly exceed the diameter of the specimen. The center of the bearing face should coincide with the center of the sphere. The moving portion of this block should be held closely in the spherical seat, but the design should be such that the bearing face can be rotated freely and tilted through small angles in any direction. This is necessary to prevent eccentric loading conditions on the test specimen.

NOTE 1.–It is desirable that the bearing faces of blocks used for compression testing of soil-cement have a Rockwell hardness C number not less than 60.

7.1.2 *Vernier Calipers.*–Capable of measurements from 1-1/2 inches to 12 inches (37 to 300 mm).

7.1.3 *Saw.*–Power saw capable of cutting the cored soil-cement specimens to the proper length.

7.1.4 *Moist Room or Water Bath.*–A moist room or water bath capable of maintaining a uniform temperature of 73.4±3.0 °F (23.0±1.7 °C) and a relative humidity of not less than 95 percent, conforming to the requirements of ASTM C 511.

7.2 *Equipment Unique to This Procedure*:

7.2.1 *Water Bath.*–A suitable tank for submerging compacted specimens in water at room temperature.

7.2.2 *Capping Device.*–A mold or jig used while placing sulfur caps of consistent dimensions on 3-inch-(75-mm) diameter test specimens.

7.3 *Miscellaneous Equipment.*–Damp towels for keeping test specimens moist (see subpar. 11.3).

8. Precautions

8.1 *Safety Precautions*:

8.1.1 This designation may involve hazardous materials, operations, and equipment.

8.1.2 When capping the cylinders with sulfur mortar, wear protective gloves with cuffs at least 6 inches (150 mm) long.

8.1.3 Melting pots equipped with peripheral heating help to prevent accidents during reheating of cooled sulfur mixtures which have a crusted-over surface. When using melting pots not so equipped, a buildup of pressure under the hardened surface crust on subsequent reheating may be avoided by use of a metal rod which contacts the bottom of the pot and projects above the surface of the fluid sulfur mix as it cools. The rod should be of sufficient size to conduct enough heat to the top of the sulfur on reheating to melt a ring around the rod first and thus avoid development of pressure. A large metal ladle can be substituted for the rod.

8.1.4 Sulfur melting pots should be used under a hood to exhaust the fumes from the working area. Heating over an open flame is dangerous because the flash point of sulfur is approximately 440 °F (227 °C) and the mixture can ignite because of overheating. Should the mixture start to burn, cover the melting pot with the lid to snuff out the flame. The pot should be recharged with fresh material after the flame has been extinguished.

8.1.5 Hydrogen sulfide gas may be produced during capping if sulfur mortar is contaminated with organic materials such as paraffin or oil. The gas is colorless and has a notoriously bad odor; however, the odor should not be relied upon as a warning sign, since sensitivity to the odor rapidly disappears upon exposure. High concentrations are lethal; less concentrated dosages may produce nausea, stomach distress, dizziness, headache, and irritation of the eyes. For these health reasons, it is mandatory that the melting pot be located under a hood or near an exhaust fan and that the capping area be well ventilated.

8.1.6 Operate the compression testing machine away from other nonrelated work activities to prevent pieces of test specimens from striking personnel in the area.

8.2 *Technical Precautions.*–Sulfur capping compound should not be reused as it results in loss of strength and pourability occasioned by contamination of the mortar with oil and miscellaneous debris, and loss of sulfur through volatilization.

9. Sampling, Test Specimens, and Test Units

9.1 *Preparation of Laboratory-Compacted Test Specimens*:

9.1.1 Prepare laboratory-compacted test specimens for mix designs in accordance with USBR 5805.

9.1.2 Prepare laboratory-compacted test specimens for construction control in accordance with USBR 5806.

9.2 *Preparation of Field-Cored Test Specimens*:

9.2.1 Obtain field-cored test specimens in accordance with USBR 5835.

9.2.2 Cut the test specimen to an *L/D* ratio (length to diameter) of 2:1. Cut the ends of the specimen perpendicular to the longitudinal axis of the core.

NOTE 2.–It is not critical that the *L/D* ratio be precisely 2:1. Ratios from 1:5 to 2:5 can be used with expected variance in strength of less than 5 percent than that of a 2:1 specimen.

9.3 Soak the test specimens in water for 4 to 24 hours before capping.

9.4 *Capping*:

9.4.1 Capped surfaces should be at right angles to the major axis of the specimen.

9.4.2 Before capping, remove all loose particles from the ends of the cylinders and thoroughly dry with a towel, as sulfur will not adhere to a wet surface.

9.4.3 Cap the ends of all compression test specimens in accordance with USBR 4617 or ASTM C 617.

10. Calibration and Standardization

10.1 Verify that equipment is currently calibrated in accordance with the applicable calibration procedure. If the calibration is not current, perform the calibration before using the equipment for this procedure.

10.2 Verify that the testing machine meets all requirements of this procedure and is calibrated in accordance with USBR 1104. Soil-cement typically has a compressive strength of 300 to 1,500 lbf/in² (2100 to 10 300 kPa), and the testing machine must be equipped to provide a suitable load range and must be calibrated for that load range.

11. Conditioning

11.1 *Laboratory-Compacted Test Specimens*:

11.1.1 Cure the laboratory-compacted test specimens in accordance with procedures described in USBR 5805 or 5806.

11.2 *Field-Cored Test Specimens*:

11.2.2 During the period from time of coring to time of preparing specimens for compressive strength testing, protect test specimens from moisture loss.

11.3 After capping the test specimens with sulfur, keep the specimens under damp—but not wet—towels until they are tested. Do not use wet towels as the excess moisture may cause the sulfur caps to separate from the cylinders.

12. Procedure

12.1 Perform compression tests of test specimens as soon as practical after completion of soaking.

12.2 All data are to be recorded on the "Soil-Cement Unconfined Compressive Strength Test" form as shown on figures 1A and 1B, or "Soil-Cement Test Cylinder Break Card" as shown on figures 2A (in-lb units) and 2B (SI units).

12.3 Using calipers, determine the diameter of the test specimen to the nearest 0.01 inch (0.2 mm) by averaging two diameters measured at right angles to each other near the center of the length of the specimen. Use this average diameter for calculating the cross-sectional area. Measure the length of the specimen including sulfur caps to the nearest 0.1 inch (2 mm). Record the average diameter and length of the test specimen.

12.4 *Testing*:

12.4.1 Place the specimen between the hardened steel bearing plates of the compression testing machine directly under the spherically seated upper head. Make certain that the center of the specimen is aligned vertically with the center of the upper head. As the spherically seated head is brought to bear on the top bearing plate, rotate the movable portion gently by hand to obtain uniform seating.

12.4.2 Adjust the compression testing machine to a constant loading rate within the limits of 20 to 50±10 (lbf/in²)/s (140 to 340±70 kPa/s). Apply the load uniformly and without shock.

12.4.3 Apply the load until the specimen fails and record the maximum load applied to the specimen during the test. Note the type of failure and the appearance of the soil-cement. For about 1 of every 10 specimens, continue the loading until the specimen breaks enough to examine the appearance of the interior of the specimen and record any apparent segregations, lenses, pockets, etc., in the soil-cement.

12.4.4 Record the total load to the nearest 50 lbf (100 N for SI application) at failure of the test specimen.

12.4.5 Calculate the compressive strength of the specimen and record to the nearest 10 lbf/in² (10 kPa).

13. Calculations

13.1 Calculate the area of the test specimen:

$$A = \frac{\pi D^2}{4} \quad (1)$$

where:

A = area, in² or mm²
D = average diameter of the cylinder, in or mm
π = 3.14

13.2 Calculate the compressive strength:

$$q_u = \frac{P_{max}}{A} \quad (2)$$

where:

q_u = compressive strength, lbf/in² or N/mm²
P_{max} = load at failure lbf or N

13.3 *Inch-Pound Units.*–Report compressive strength as lbf/in².

13.4 *Metric Units.*–Report compressive strength as kPa. Convert N/mm² to kPa:

$$\text{kPa} = 1000 \left(\frac{\text{N}}{\text{mm}^2}\right) \quad (3)$$

13.5 Sample calculations, for determining compressive strength of a test specimen, are shown in the appendix.

14. Report

14.1 The report is to consist of the following completed USBR forms:

"Soil-Cement Unconfined Compressive Strength Test" (fig. 1A or 1B),

"Soil-Cement Test Cylinder Break Card" (fig. 2A or 2B).

Record all appropriate remarks as to the type of failure, defects noted, or nonuniformity of material.

14.2 All calculations are to show a checkmark.

APPENDIX

X1. SAMPLE CALCULATIONS FOR DETERMINING COMPRESSIVE STRENGTH OF A TEST SPECIMEN

X1.1 The following is a sample calculation for determining compressive strength of the test specimen in inch-pound units.

$$A = \frac{\pi D^2}{4} = \frac{\pi (3.05 \text{ in})^2}{4} = 7.31 \text{ in}^2 \quad (X1)$$

$$q_u = \frac{P_{max}}{A} = \frac{4{,}500 \text{ lbf}}{7.31 \text{ in}^2} \quad (X2)$$

$$q_u = 620 \text{ lbf/in}^2$$

where:

D = average diameter of the specimen measured with calipers, 3.05 inches
q_u = compressive strength, lbf
P_{max} = load at failure determined from test, 4,500 lbf

X1.2 The following is a sample calculation for determining compressive stength of the test specimen in newtons per square millimeter.

$$A = \frac{\pi D^2}{4} = \frac{\pi (76.1 \text{ mm})^2}{4} = 4548.4 \text{ mm}^2 \quad (X3)$$

$$q_u = \frac{P_{max}}{A} = \frac{20\,100 \text{ N}}{4548.4 \text{ mm}^2} \quad (X4)$$

$$q_u = 4.42 \text{ N/mm}^2$$

where:

D = average diameter of the specimen measured with calipers, 76.1 mm
q_u = compressive strength, N/mm²
P_{max} = load at failure determined from test, 20 100 N

and converting N/mm² to kPa:

$$q_u = \text{kPa} = 1000 \left(\frac{\text{N}}{\text{mm}^2}\right) \quad (X5)$$

$$q_u = 1000\ (4.42) \left(\frac{\text{N}}{\text{mm}^2}\right) = 4420 \text{ kPa}$$

7-1803 (6-85)
Bureau of Reclamation

SOIL-CEMENT UNCONFINED COMPRESSIVE STRENGTH TEST

Designation USBR 5805- 8 9

Project: Example

Feature: Example

Location: AP-25

Depth/Elev.: 3.5 - 6.5 ft.

Sample No.: 5805T

Auxiliary tests: USBR 5300- 8 9, USBR 5800- 8 9

Cement content: 12.0 %

Compressive strength (q_u) = $\frac{\text{Load at failure}}{\text{Area}}$; Area = $\frac{\pi D^2}{4}$

Placement: γ_d = 127.4 lbf/ft³, w = 10.8 %

Loading rate: 20 lbf/in²/s

Placed at 98.0 % of 130.0 lbf/ft³ γ_{max}; w_o = 11.0 %

Specimen No.	Date Formed	Date Tested	Length (L) (in)	Avg. Dia. (D) (in)	L/D Ratio	Load at failure (lbf) 3-day	7-day	28-day	90-day	Area (in²)	q_u (lbf/in²)	q_u avg. (lbf/in²)	Prepared by	Tested by	Checked by	NOTES
401	2-22-89	2-25-89	5.60	2.80	2.00	4200				6.16	680		JKL	LMN	RST	
402	2-22-89	2-25-89	5.60	2.80	2.00	4300				6.16	700	690	JKL	LMN	RST	
403	2-22-89	———	—	—	—	———				———	———		—	—	—	SPECIMEN CRACKED DURING EXTRUSION
404	2-22-89	3-1-89	5.60	2.80	2.00		4950			6.16	800		JKL	JKL	LMN	
405	2-22-89	3-1-89	5.60	2.80	2.00		4900			6.16	800	800	JKL	JKL	LMN	
406	2-22-89	3-1-89	5.60	2.80	2.00		4950			6.16	800		JKL	JKL	LMN	
407	2-22-89	3-22-89	5.60	2.80	2.00			6600		6.16	1070		JKL	JKL	RST	
408	2-22-89	3-22-89	5.60	2.80	2.00			6700		6.16	1090	1090	JKL	LMN	RST	
409	2-22-89	3-22-89	4.98	2.80	1.78			6800		6.16	1100		JKL	LMN	RST	END CRACKED DURING EXTRUSION
410	2-23-89	5-23-89	5.61	2.79	2.01				8800	6.11	1440		LMN	RST	JKL	
411	2-23-89	5-23-89	5.61	2.79	2.01				9200	6.11	1510	1470	LMN	RST	JKL	
412	2-23-89	5-23-89	5.61	2.79	2.01				8900	6.11	1460		LMN	RST	JKL	

GPO 848 - 506

Figure 1A. – Soil-cement unconfined compressive strength test (in-lb example).

7m-1803 (6-85)
Bureau of Reclamation

SOIL-CEMENT UNCONFINED COMPRESSIVE STRENGTH TEST

Designation USBR 5805- 8 9

Project: Example

Feature: Example

Location: AP-25

Depth/Elev.: 1.8 – 3.5 m

Sample No.: 5805T

Auxiliary tests: USBR 5300- 8 9, USBR 5800- 8 9

Cement content: 12.0 %

Compressive strength (q_u) = $\frac{\text{Load at failure}}{\text{Area}} = \frac{N}{mm^2}$; kPa = $\frac{N}{mm^2} \times 10^3$; Area = $\frac{\pi D^2}{4}$

Placement: γ_d = 17.7 kN/m³, w = 10.4 %

Loading rate: 0.20 MPa/s

Placed at 98.0 % of 18.1 kN/m³ γ_{max}; w_o = 10.6 %

Specimen No.	Date Formed	Date Tested	Length (L) (mm)	Avg. Dia. (D) (mm)	L/D Ratio	Load at failure (N) 3-day	7-day	28-day	90-day	Area (mm²)	q_u (kPa)	q_u avg. (kPa)	Prepared by	Tested by	Checked by	NOTES
401	2-22-89	2-25-89	142.0	71.1	2.00	18700				3970.4	4710		JKL	LMN	RST	
402	2-22-89	2-25-89	142.0	71.1	2.00	19100				3970.4	4810	4760	JKL	LMN	RST	
403	2-22-89	2-25-89	—	—	—	—				—	—		—	—	—	SPECIMEN CRACKED DURING EXTRUSION
404	2-22-89	3-1-89	142.0	71.1	2.00		22000			3970.4	5540		JKL	LMN	RST	
405	2-22-89	3-1-89	142.0	71.1	2.00		21800			3970.4	5490	5520	JKL	JKL	LMN	
406	2-22-89	3-1-89	142.0	71.1	2.00		22000			3970.4	5540		JKL	JKL	LMN	
407	2-22-89	3-22-89	142.0	71.1	2.00			29400		3970.4	7400		JKL	LMN	RST	
408	2-22-89	3-22-89	142.0	71.1	2.00			30000		3970.4	7560	7520	JKL	LMN	RST	
409	2-22-89	3-22-89	128.4	71.1	1.81			30200		3970.4	7610		JKL	LMN	RST	END CRACKED DURING EXTRUSION
410	2-23-89	5-23-89	141.8	70.9	2.00				39100	3948.0	9900		LMN	RST	JKL	
411	2-23-89	5-23-89	141.8	70.9	2.00				40900	3948.0	10360	10,100	LMN	RST	JKL	
412	2-23-89	5-23-89	141.8	70.9	2.00				39600	3948.0	10030		LMN	RST	JKL	

GPO 848 - 509

Figure 1B. – Soil-cement unconfined compressive strength test (SI example).

7-2149 (6-85)
Bureau of Reclamation

SOIL–CEMENT
TEST CYLINDER BREAK CARD

Designation USBR 5806- 8 9 Auxiliary Tests: USBR 7205- 8 9, USBR 7206- __ __

Feature: Example Structure: 3:1 Slope of Dam Face

Test No. or Location 2-22-A-1 Date Placed: 2-22-89 Shift: A Time: 3:30 PM

Mold Volume: 0.0200 ft^3 Fill Unit Weight: 136.0 lbf/ft^3

D-Value: 98.9 % Cement Content: 11.2 % Loading Rate: 30 $lbf/in^2/S$

Specimen number	Age (days)	Break Date	Average Length (L) (in)	Average Dia (D) (in)	L/D	Load at Failure (lbf)	Area (in^2) $A = \frac{\pi D^2}{4}$	Compressive Strength (lbf/in^2) $q_u = \frac{Load}{A}$	Prepared By	Tested By	Checked By
1	3	2-25-89	4.98	2.80	1.78*	3800	6.16	620	CED	JNL	KAT
2	7	3-01-89	5.60	2.80	2.00	4200	6.16	680	CED	RPT	KAT
3	7	3-01-89	5.60	2.80	2.00	4300	6.16	700	CED	RPT	KAT
4	28	3-22-89	5.60	2.80	2.00	6050	6.16	980	DAB	JNL	KAT
5	28	3-22-89	5.60	2.80	2.00	6150	6.16	1000	DAB	JNL	KAT
6	90	5-23-89	5.60	2.80	2.00	6750	6.16	1100**	DAB	CED	KAT

Remarks on Reverse Side

Remarks:

* L/D is less than 2.0 at 3 days because the end of the specimen cracked during extrusion

** 3/4" clayball on side of test specimen

Figure 2A. – Soil-cement test cylinder break card (in-lb example).

7m-2149 (6-85)
Bureau of Reclamation

SOIL–CEMENT TEST CYLINDER BREAK CARD

Designation USBR 5806: 8 9 Auxiliary Tests: USBR 7205: 8 9, USBR 7206: ___ ___

Feature: Example Structure: 3:1 Slope of Dam Face

Test No. or Location: 2-22-A-1 Date Placed: 2-22-89 Shift: A Time: 3:30 PM

Mold Volume: 5.63×10^{-4} m^3 Fill Unit Weight: 20.0 kN/m^3
(to convert from cm^3 to m^3, divide by 10^6)

D-Value: 98.9 % Cement Content: 12.0 % Loading Rate: 0.20 MPa/s

Specimen number	Age (days)	Break Date	Average Length (L) (mm)	Average Dia (D) (mm)	L/D	Load at Failure (N)	Area (mm^2) $A = \frac{\pi D^2}{4}$	Compressive Strength (kPa) $(q_u) = \frac{Load}{A} \times 10^3$	Prepared By	Tested By	Checked By
1	3	2-25-89	128.4	71.1	1.81*	18400	3970.4	4630	CED	JNL	CED
2	7	3-01-89	142.0	71.1	2.00	19500	3970.4	4910	CED	PRT	RMN
3	7	3-01-89	142.0	71.1	2.00	20000	3970.4	5040	CED	PRT	RMN
4	28	3-22-89	142.0	71.1	2.00	27200	3970.4	6850	CED	PRT	CED
5	28	3-22-89	142.0	71.1	2.00	28100	3970.4	7080	CED	JNL	CED
6	90	5-23-89	142.0	71.1	2.00	39100	3970.4	9850**	CED	CED	RMN

Remarks on Reverse Side

Remarks:

*L/D is less than 2.0 at 3 days because the end of the specimen cracked during extrusion

** 25-mm clayball on side of test specimen

Figure 2B. – Soil-cement test cylinder break card (SI example).

UNITED STATES DEPARTMENT OF THE INTERIOR
BUREAU OF RECLAMATION

USBR 5815-89

PROCEDURE FOR

PREPARING SOIL-CEMENT SPECIMENS FOR DURABILITY TESTING

INTRODUCTION

This procedure is under the jurisdiction of the Geotechnical Services Branch, code D-3760, Research and Laboratory Services Division, Denver Office, Denver, Colorado. The procedure is issued under the fixed designation USBR 5815. The number immediately following the designation indicates the year of acceptance or the year of last revision.

This procedure is similar to the specimen preparation and molding procedure described in ASTM D 559 and D 560, except that this procedure contains a rewritten and more detailed description and includes USBR data forms. Corresponding forms in SI units are included. The SI forms have the letter M following the first digit in the form number.

1. Scope

1.1 This designation outlines the procedure for making and curing soil-cement specimens for wet-dry (USBR 5820) and freeze-thaw (USBR 5825) durability testing for mix designs.

2. Auxiliary Tests

2.1 The maximum dry unit weight and optimum moisture content must be determined in accordance with USBR 5800 in order to compact the test specimen at laboratory maximum dry unit weight and optimum moisture content. The moisture content of the soil must be determined in accordance with USBR 5300 as part of performing this procedure.

3. Applicable Documents

3.1 *USBR Procedures*:
USBR 1009 Calibrating Compaction Molds
USBR 1415 Calibrating Laboratory Mechanical Compactors
USBR 3900 Standard Definitions of Terms and Symbols Relating to Soil Mechanics
USBR 5300 Determining Moisture Content of Soil and Rock the Oven Method
USBR 5320 Determining Specific Gravity of Soils
USBR 5800 Performing Laboratory Compaction of Soil-Cement Mixtures
USBR 5810 Performing Compressive Strength Testing of Soil-Cement Cylinders
USBR 5820 Performing Wet-Dry Durability Testing of Compacted Soil-Cement Mixtures
USBR 5825 Performing Freeze-Thaw Durability Testing of Compacted Soil-Cement Mixtures

3.2 *ASTM Standards*:
C 150 Specification for Portland Cement
C 511 Specification for Moist Cabinets, Moist Rooms, and Water Storage Tanks Used in the Testing of Hydraulic Cements and Concretes
C 595 Specification for Blended Hydraulic Cements
D 559 Wetting-and-Drying Tests of Compacted Soil-Cement Mixtures
D 560 Freezing-and-Thawing Tests of Compacted Soil-Cement Mixtures
E 11 Specification for Wire-Cloth Sieves for Testing Purposes

4. Summary of Method

4.1 Six soil-cement durability test specimens are molded for each of three cement contents to determine durability of the soil-cement when subjected to repeated cycles of wetting and drying or freezing and thawing. Six specimens are prepared at each cement content so that two specimens can be subjected to repeated wetting and drying, two specimens can be subjected to repeated freezing and thawing, and two specimens can be used to determine moisture content. A batch of soil-cement is prepared at the desired cement content and optimum moisture content. Only enough material is mixed at one time to prepare three test specimens and obtain one moisture content. The soil-cement is compacted to laboratory maximum dry unit weight by placing and compacting in a 1/30-ft^3 (944-cm^3) mold in three equal layers. Then the specimens are cured in a moist room for 7 days prior to durability testing.

5. Significance and Use

5.1 Soil-cement durability testing is performed to determine the accumulated soil-cement mass losses produced by repeated wetting and drying or freezing and thawing.

5.2 Wet-dry durability (USBR 5820), freeze-thaw durability (USBR 5825), and compressive strength (USBR 5810) tests are normally performed to evaluate the adequacy of compacted, cured soil-cement.

5.3 Laboratory-compacted soil-cement specimens are tested to determine the cement content to be specified in a soil-cement mix design. Based on satisfactory performance of existing soil-cement structures, Bureau criteria require accumulated durability mass losses of (1) less

than 6 percent following 12 cycles of wetting and drying, and (2) less than 8 percent following 12 cycles of freezing and thawing. An economical mix design uses the lowest cement content that meets both strength and durability requirements.

5.4 Normally, compressive strength testing is conducted prior to durability testing to eliminate mix designs that do not meet unconfined compressive strength criteria.

6. Terminology

6.1 Definitions are in accordance with USBR 3900.

6.2 Terms not included in USBR 3900 of particular significance are:

6.2.1 *Cement Content.*–Amount of cement in a soil-cement mixture, specified as a percent of dry soil mass.

6.2.2 *Soil-Cement Moisture Content.*–Ratio of the mass of water to the total dry mass of a soil-cement mixture, expressed as a percent.

6.2.3 *SSD* (saturated surface dry).–Condition of an aggregate particle when the permeable voids are filled with water and water is not on the exposed surfaces.

7. Apparatus

7.1 *General Apparatus*:

7.1.1 U.S.A. Standard series 1-inch, 3/4-inch, No. 4, and No. 16 (25.0-, 19.0-, 4.75-, and 1.18-mm, respectively) sieves, conforming to the requirements of ASTM E 11.

7.1.2 *Balance or Scales.*–Typical balances or scales used for this designation are:

Application	*Readable to*	*Approximate capacity*
Moisture content	0.1 g	1000 g
Mass of compaction specimen	0.01 lbm	25 lbm

7.1.3 *Straightedge.*–A rigid steel bar 12 inches (305 mm) long and having one beveled edge for trimming the top of the specimens.

7.1.4 *Knife.*–A knife 10 inches (250 mm) long for trimming the top of the specimens.

7.1.5 *Scarifier.*–A six-pronged ice pick or similar apparatus to scarify the smooth compaction plane between two adjacent layers of the specimen.

7.1.6 *Moist Room or Water Bath.*–A moist room or water bath capable of maintaining a temperature of 73.4±3.0 °F (23.0±1.7 °C) and a relative humidity of not less than 95 percent, conforming to the requirements of ASTM C 511.

7.2 *Equipment Unique to This Procedure*:

7.2.1 *Mold.*–A cylindrical metal mold having a capacity of 1/30±0.0004 ft^3 (944±11 cm^3), an internal diameter of 4.0±0.016 inch (101.60±0.41 mm), and a height of 4.584±0.005 inch (116.43±0.13 mm) to permit preparing compacted specimens of soil-cement mixtures of this size. The mold is provided with a detachable collar assembly approximately 2-1/2 inches (64 mm) in height. The mold may be of the split type consisting of two one-half-round sections split perpendicular to the mold circumference and that can be locked securely in place to form a closed cylinder having the dimensions described above. The mold assembly is constructed so it can be fastened firmly to a detachable base (fig. 1). The base should be secured to a level, uniformly rigid foundation, equivalent to a 200-lbm (90-kg) cylinder of concrete.

7.2.2 *Rammers*:

7.2.2.1 *Manual Rammer.*–A manually operated metal rammer having a 2.0±0.005-inch (50.80±0.13-mm) diameter circular face and a mass of 5.5±0.02 lbm (2.49±0.01 kg). The rammer is equipped with a suitable guide sleeve to control the height of drop to a free-fall of 12.0±1/16 inch (304.80±1.6 mm) above the elevation of the soil-cement. The guide sleeve has four or more vent holes at least 3/8 inch (9.5 mm) diameter spaced at 90° and located with centers 3/4±1/16 inch (19.0±1.6 mm) from each end. The guide sleeve has an inside diameter such that free-fall of the rammer shaft and head will not be restricted.

7.2.2.2 *Mechanical Rammer.*–A mechanically operated rammer having a 2.0±0.005-inch (50.80± 0.13-mm) diameter face and a mass of 5.5±0.02 lbm (2.49±0.01 kg). The operating mass of the rammer is determined from a calibration in accordance with USBR 1415. The rammer is equipped with a suitable arrangement to control the height of drop to a free-fall of 12.0±1/16 inch (304.80±1.6 mm) above the elevation of the soil-cement.

7.2.3 *Rammer Face.*–Strength and resistance to wetting and drying of specimens or freezing and thawing of specimens compacted with the sector face rammer may differ from that of specimens compacted with the circular face rammer. Therefore, the sector face rammer should not be used unless previous tests on similar soil-cement mixtures show that similar resistance to wetting and drying or freezing and thawing is obtained with the two types of rammers.

7.2.4 *Sample Extruder.*–A jack, lever frame, or other device adapted for the purpose of extruding compacted specimens from the mold; this is not required when a split-type mold is used.

7.2.5 *Thin Plastic Liners.*–Liners are used on the inside of the mold to prevent soil-cement from adhering to the sides of the mold.

7.3 *Miscellaneous Equipment*:

7.3.1 Miscellaneous mixing tools such as a large mixing pan and trowel, or a suitable mechanical device for thoroughly mixing the soil, cement, and water.

7.3.2 Thin spatula for distributing soil-cement along the inside of the mold.

7.3.3 Suitable pans for handling materials and transporting test specimens.

7.3.4 Suitable carriers or trays for handling test specimens.

7.3.5 Damp towels for keeping test specimens moist.

7.3.6 Plastic for covering soil-cement mixture to prevent moisture loss.

7.3.7 Suitable waterproof markers for labeling soil-cement test specimen.

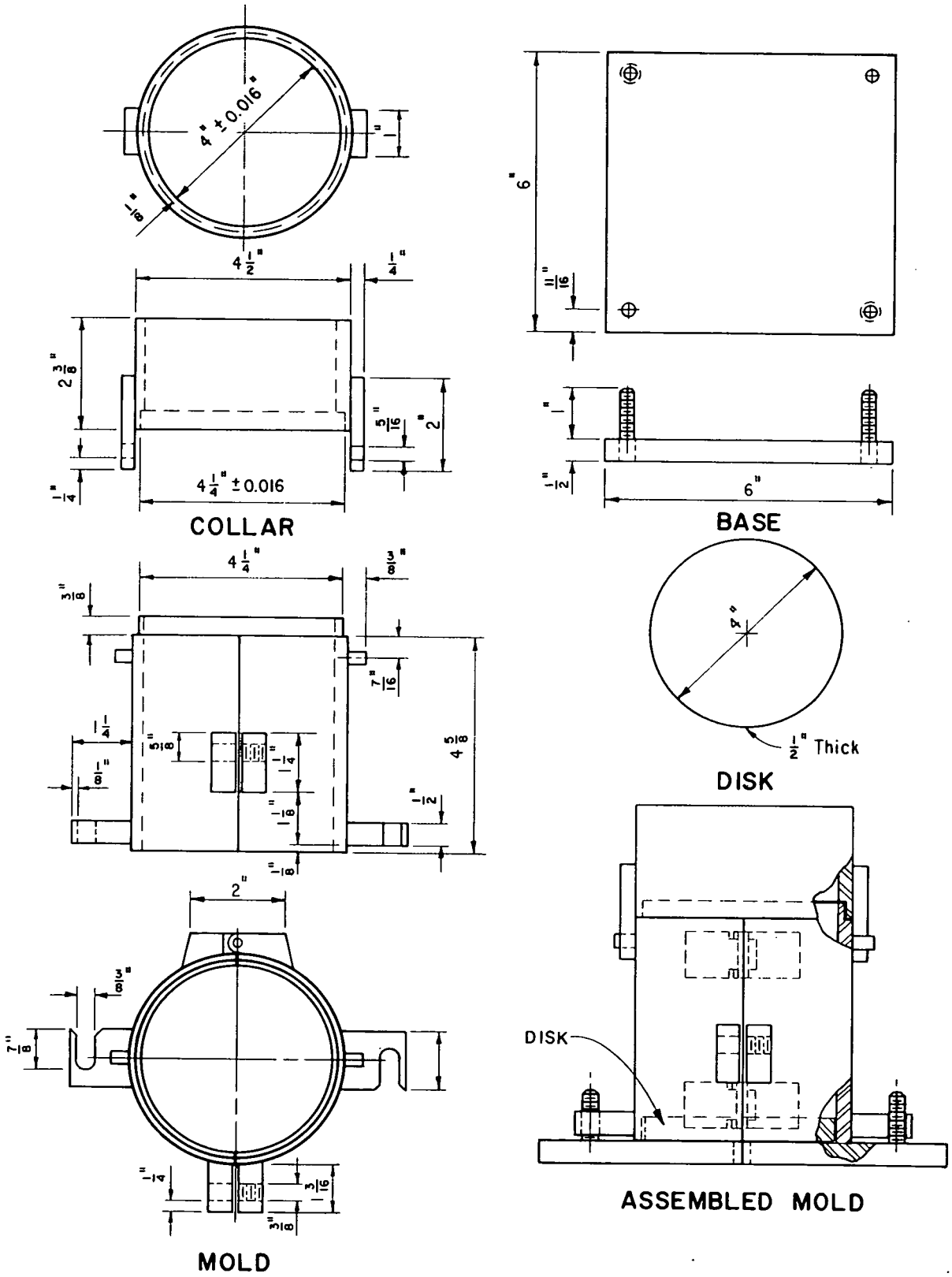

Figure 1. – Soil-cement durability mold.

8. Reagents and Materials

8.1 Tapwater that is free of acids, alkalies, or oils and is suitable for drinking should be used for mixing water.

8.2 The cement must conform to ASTM C 150 and ASTM C 595.

9. Precautions

9.1 *Safety Precautions*:

9.1.1 This designation may involve hazardous materials, operations, and equipment.

9.1.2 Exercise care to protect hands from drying and abrasive properties of cement.

9.1.3 Carefully mix the soil and cement using a large pan and avoid forming a cement dust cloud. Wear a protective mask to prevent inhaling the cement dust.

9.2 *Technical Precautions*:

9.2.1 Laboratory-compacted soil-cement test specimens are very fragile, and special care should be taken in preparation, handling, and transportation to prevent damage.

9.2.2 If a split-type mold is not used, maintain a slow, constant rate of extrusion when extruding the specimen from the mold. Fractures can occur in the specimen if the extrusion process is not conducted with care.

9.2.3 To minimize the effects of cement hydration and evaporation, perform the test expeditiously and continuously to completion.

10. Sampling, Test Specimens, and Test Units

10.1 *Cement.*–Pass the cement through a U.S.A. Standard series No. 16 (1.18-mm) sieve and discard all lumps.

10.2 *Water.*–The mixing water must conform to subparagraph 8.1.

10.3 *Soil*:

10.3.1 Dry the soil sample until it becomes friable. Allow the sample to air-dry, or use a drying apparatus such that the temperature of the sample does not exceed 140 °F (60 °C). Thoroughly break up any large soil aggregations in such a manner as to avoid reducing the natural size of individual soil particles.

10.3.2 Sieve the sample on the No. 4 (4.75-mm) sieve. For soils containing more than 5 percent (by dry mass) material retained on the No. 4 sieve, use the procedure outlined in annex A1 for processing the plus No. 4 soil.

10.3.3 Obtain a representative sample of soil passing the No. 4 sieve, and determine the moisture content of the sample in accordance with USBR 5300.

10.4 Six specimens are prepared at each cement content so that two specimens can be subjected to repeated wetting and drying, two specimens can be subjected to repeated freezing and thawing, and two specimens can be used to determine moisture content. However, only enough material is mixed at one time to prepare three specimens and obtain one moisture content.

11. Calibration and Standardization

11.1 Verify that equipment is currently calibrated in accordance with the applicable calibration procedure. If the calibration is not current, perform the calibration before using the equipment for this procedure.

11.2 Calibrate durability test specimen molds in accordance with USBR 1009.

11.3 Calibrate mechanical compactor in accordance with USBR 1415.

12. Conditioning

12.1 Bring materials to room temperature [preferably 65 to 75 °F (18 to 24 °C)] before preparing the specimens.

12.2 Store cement in moisture-proof containers in a dry place.

12.3 Cure the test specimens in a high humidity environment for the specified moist curing period.

13. Procedure

13.1 Record all data on the "Preparation of Soil-Cement for Molded Durability Test Specimens" form. For soils containing 5 percent or less plus No. 4 (4.75-mm) aggregate, record on figure 2A (in-lb system) or 2B (SI system). For soils containing more than 5 percent plus No. 4 (4.75-mm) aggregate, record on figure 3A (in-lb system) or 3B (SI system). Record placement data on the "Soil-Cement Durability Tests" form on figure 4.

13.2 Calculate individual quantities of soil, cement, and water required to prepare three test specimens at the desired cement content and a representative specimen for a moisture content determination. Calculate each quantity to the nearest 0.01 lbm (5 g). Add an additional 0.3 percent water to compensate for moisture loss caused by evaporation and cement hydration. The initial moisture content of the minus No. 4 (4.75-mm) soil, as determined in accordance with USBR 5300, is used to calculate the additional water required to bring the soil-cement mixture to optimum moisture content. For soils containing more than 5 percent plus No. 4 (4.75-mm) material, refer to annex A1 for calculations.

13.3 Use appropriate clean, dry containers and obtain quantities of soil, cement, and water in the amounts calculated in subparagraph 13.2.

13.4 Mix the soil, cement, and water either by hand or in a suitable laboratory mixer. Use a continuous operation for mixing and compacting the durability test specimens. Do not exceed 45 minutes elapsed time between addition of water and final compaction.

13.4.1 *Hand Mixing.*–Mix the batch in a clean, damp, metal pan or on top of a steel table, with a blunt bricklayer's trowel using the following procedure:

13.4.1.1 Mix the cement and soil until thoroughly blended.

13.4.1.2 Add the calculated quantity of water required to raise the moisture content of the mixture to optimum moisture content plus an additional 0.3 percent water to compensate for moisture loss caused by evaporation and cement hydration; mix thoroughly.

13.4.2 *Machine Mixing.*–Follow the sequence specified in suparagrphs 13.4.1.1 and 13.4.1.2. To eliminate segregation of coarse soil particles, deposit machine-mixed soil-cement into a clean, damp metal pan and remix with the trowel.

13.4.3 Balls of cement may form when water is added to soil-cement mixtures. Break down and mix these balls of cement with the soil-cement mixture to ensure that the cement and water are distributed uniformly.

13.5 Protect the soil-cement mixture against moisture loss by immediately covering with plastic or damp towels.

13.6 Place a thin plastic liner around the inside of the mold to prevent the soil-cement from sticking to the mold.

13.7 During compaction, take a representative sample of the moist soil-cement from the batch, screen out the plus No. 4 (4.75-mm) material, and determine the moisture content of the minus No. 4 (4.75-mm) material in accordance with USBR 5300. Calculate the percentage of moisture to check against the design moisture content. Record on figure 2A or 2B, or figure 3A or 3B.

13.8 Form the specimen to laboratory maximum dry unit weight (±1.0 percent) by immediately compacting the soil-cement in the mold, with collar attached, with the manual or mechanical rammer in accordance with USBR 5800 except for the difference in mold dimensions and height of rammer drop from those noted in USBR 5800. When the soil-cement contains aggregate retained on the No. 4 (4.75-mm) sieve, carefully spade the mix around the mold with a thin spatula. Compact the soil-cement in three equal layers. Scarify the top of each compacted layer to remove smooth compaction planes before placing and compacting succeeding layers. Using the scarifier, form grooves at right angles to each other approximately 1/8 inch in width, 1/8 inch in depth and about 1/4 inch apart (3 × 3 × 6 mm).

13.9 Remove the collar and trim the excess material even with the top of the mold. Trowel the top of the specimen to a smooth, even surface.

13.10 Determine the mass of the compacted specimen and mold. Remove the specimen from the mold and label the specimen. On figure 4, record the specimen number, cement content, placement conditions, and the date it was formed.

13.11 Following the procedures described in subparagraphs 13.6 through 13.10, except for the moisture content determination (subpar. 13.7), form two additional specimens as rapidly as possible. The moisture content determined from the batch is used for the placement dry unit weight calculation on all three specimens. Keep the specimens under damp, but not wet, towels until placement in the moist room for curing.

13.12 Calculate the dry unit weight of the specimen in lbf/ft³ (kN/m³) and check against the design dry unit weight. The specimen dry unit weight should not vary more than ±1 percent from the design dry unit weight. Record the dry unit weight of the specimen on figure 2A or 2B, 3A or 3B, and figure 4.

13.13 Place the specimens on suitable carriers in a moist room and protect them from free and running water for a period of 7 days.

NOTE 1.–Care must be taken when transporting the test specimens. They are very susceptible to breakage at this time.

13.14 Repeat the procedures described in subparagraphs 13.1 through 13.13 making three additional specimens at the same cement content.

13.15 Repeat the procedures described in subparagraphs 13.1 through 13.14 for each additional cement content.

14. Calculations

14.1 Calculate the total dry mass of a test batch using the following equations.

14.1.1 *Inch-Pound Units*: Convert unit weight to density by changing lbf/ft³ to lbm/ft³ (see note 2).

$$m_t = (\rho_{dLabMax})\ V \qquad (1)$$

where:

m_t = total dry mass, lbm
V = test batch volume of 0.12 ft³ is recommended
$\rho_{dLabMax}$ = laboratory maximum dry unit weight converted to density, lbm/ft³

NOTE 2.–For this application, a 1-pound mass is considered to be numerically equal to a 1-pound force.

14.1.2 *SI Units*:

$$\rho_{dLabMax} = 101.97\ (\gamma_{dLabMax}) \qquad (2)$$

$$m_t = (\rho_{dLabMax})\ V \qquad (3)$$

where:

$\rho_{dLabMax}$ = laboratory maximum dry density, kg/m³
$\gamma_{dLabMax}$ = laboratory maximum dry unit weight, kN/m³
m_t = total dry mass, kg
V = test batch volume of 0.0034 m³ is recommended
101.97 = convert from kN/m³ to kg/m³

NOTE 3.–Two values are combined in the above constant. To convert from unit weight kN/m³, to density kg/m³, divide by the acceleration of gravity (9.8067 m/s²) and multiply by 1000.

14.2 Calculate the individual masses of dry soil, cement, and water in a batch.

$$m_s = \frac{m_t}{(1 + C)} \qquad (4)$$

$$m_c = m_t - m_s \qquad (5)$$

$$m_w = m_t\ (w_o + 0.003) \qquad (6)$$

where:

m_s = mass of dry soil, lbm or kg
C = design cement content and expressed as a decimal
m_c = mass of cement, lbm or kg
m_w = mass of water, lbm or kg
w_o = optimum moisture content and expressed as a decimal

0.003 = percent of additional water required to compensate for moisture loss caused by evaporation and cement hydration and expressed as a decimal

14.3 Calculate the individual masses of moist soil and additional water in a batch.

$$m_{sm} = m_s\ (1 + w_f) \quad (7)$$

$$m_{wa} = m_w - (m_{sm} - m_s) \quad (8)$$

where:
m_{sm} = mass of moist soil, lbm or kg
w_f = soil moisture content and expressed as a decimal
m_{wa} = mass of additional water, lbm or kg

14.4 Calculate the total wet mass of soil-cement for a test batch.

$$m_{tw} = m_{sm} + m_c + m_{wa} \quad (9)$$

where m_{tw} equals total wet mass of soil-cement, lbm or kg.

14.5 Calculate wet unit weight of the compacted soil-cement specimen using the following equations.

14.5.1 *Inch-Pound Units*: Convert density to unit weight by changing lbm/ft³ to lbf/ft³ (see note 4).

$$m_{spec} = D - E \quad (10)$$

$$\rho_{wet} = \frac{m_{spec}}{V_m} \quad (11)$$

$$\gamma_{dry} = \frac{\gamma_{wet}}{1 + w_f} \quad (12)$$

where:
m_{spec} = mass of compacted soil-cement specimen, lbm
D = mass of mold plus wet soil-cement, lbm
E = mass of mold, lbm
V_m = mold volume, ft³
γ_{wet} = wet unit weight of compacted soil-cement specimen lbf/ft³
ρ_{wet} = wet density of compacted soil-cement specimen, lbm/ft³
w_f = moisture content of compacted soil-cement specimen and expressed as a decimal

NOTE 4.–For this application, a 1-pound mass is considered to be numerically equal to a 1-pound force.

14.5.2 *SI Units*:

$$m_{spec} = D - E \quad (13)$$

$$\rho_{wet} = \frac{m_{spec}}{V_m} \quad (14)$$

$$\rho_{dry} = \frac{\rho_{wet}}{1 + w_f} \quad (15)$$

$$\gamma_{dry} = (9.81 \times 10^{-3})\ \rho_{dry} \quad (16)$$

where:
m_{spec} = mass of compacted soil-cement specimen, kg
D = mass of mold plus wet soil-cement, kg
E = mass of mold, kg
V_m = mold volume, m³
w_f = moisture content of compacted soil-cement specimen and expressed as a decimal
ρ_{wet} = wet density of compacted soil-cement specimen, kg/m³
ρ_{dry} = dry density of compacted soil-cement specimen, kg/m³
γ_{dry} = dry unit weight of compacted soil-cement specimen, kN/m³
9.81×10^{-3} = converts kg/m³ to kN/m³

NOTE 5.–Two values are combined in the above constant. To convert from density kg/m³, to unit weight kN/m³, multiply by the acceleration of gravity (9.8067 m/s²) and divide by 1000.

14.6 Calculate the percent of laboratory maximum dry unit weight using the following equation.

$$\text{D-value} = 100 \left(\frac{\gamma_{dry}}{\gamma_{dLabMax}} \right) \quad (17)$$

where:
D-value = percent of laboratory maximun dry unit weight, %
100 = convert from decimal to percent

14.7 Calculate the variation from optimum moisture content $w_o - w_f$ using the following equation:

$$\text{Variation from optimum} = 100\ (w_o - w_f) \quad (18)$$

where 100 is the conversion to percent.

15. Report

15.1 The report is to consist of the following completed forms:

"Preparation of Soil-Cement for Molded Durability Test Specimens" [for soil containing 5 percent or less plus No. 4 (4.75-mm) aggregate] (fig. 2A or 2B).

"Preparation of Soil-Cement for Molded Durability Test Specimens" [for soil containing more than 5 percent plus No. 4 (4.75-mm) aggregate] fig. 3A or 3B.

"Soil-Cement Durability Tests" fig. 4. Record the cement content, date the specimen was formed, placement conditions, and specimen number.

15.2 All calculations are to show a checkmark.

7-2304 (6-85) Bureau of Reclamation	PREPARATION OF SOIL-CEMENT FOR MOLDED DURABILITY TEST SPECIMENS (for soil containing 5 percent or less plus No. 4 aggregate)	Designation USBR 5815- 8 9

PROJECT: Example	FEATURE: Example
LOCATION: AP-25	DEPTH/ELEVATION: 3.5 - 7.5 ft.
SAMPLE NO.: 5815T	SPECIMENS NO.: 1, 2, 3
COMPUTED BY / DATE	CHECKED BY / DATE
PREPARED BY	

Auxiliary Tests: USBR 5300- 8 9, USBR 5800- 8 9

DESIGN DATA

1. Design cement content, decimal	0.120	
2. Laboratory maximum dry unit weight	125.0	lbf/ft³
3. Optimum moisture content, decimal	0.112	
4. Moisture content of soil, decimal	0.013	
5. Test batch volume	0.12	ft³

DESIGN MASSES PER BATCH (DRY SOIL)

6. Total dry mass at laboratory maximum dry unit weight (2) x (5) [1/]	15.00	lbm
7. Mass of dry soil (6) / [1.0 + (1)]	13.39	lbm
8. Mass of cement (6) – (7)	1.61	lbm
9. Mass of water (6) x [(3) + 0.003] [2/]	1.72	lbm

DESIGN MASSES PER BATCH (MOIST SOIL)

10. Mass of moist soil (7) x [1.0 + (4)]	13.56	lbm
11. Mass of additional water (9) – [(10) – (7)]	1.55	lbm
12. Total wet mass of soil-cement (8) + (10) + (11)	16.72	lbm

PLACEMENT DATA

	Specimen No. 1	Specimen No. 2	Specimen No. 3	
13. Mass of mold and specimen	9.72	9.71	9.73	lbm
14. Mass of mold	5.10	5.10	5.10	lbm
15. Mass of wet soil (13) – (14)	4.62	4.61	4.63	lbm
16. Volume of mold	0.0333	0.0333	0.0333	ft³
17. Wet unit weight of specimen (15) / (16)	138.7	138.4	139.0	lbf/ft³
18. Placement moisture content, decimal	0.113	0.113	0.112	
19. Dry unit weight (17) / [1.0 + (18)]	124.6	124.3	125.0	lbf/ft³
20. Percent of LAB MAX [(19) / (2)] x 100	99.7	99.4	100.0	%
21. Variation from optimum $w_o - w_f$ [(3) – (18)] x 100	-0.1	-0.1	0.0	

1/ For this application, 1-pound mass is considered to be numerically equal to 1-pound force.

2/ 0.3% moisture added to account for moisture loss caused by evaporation and hydration.

GPO 848-819

Figure 2A. - Preparation of soil-cement for molded durability test specimens (for soil containing 5 percent or less plus No. 4 aggregate).

7m-2304 (6-85) Bureau of Reclamation	**PREPARATION OF SOIL-CEMENT FOR MOLDED DURABILITY TEST SPECIMENS** (for soil containing 5 percent or less plus 4.75-mm aggregate)	Designation USBR 5815- 8 9

PROJECT	FEATURE
Example	Example
LOCATION	**DEPTH/ELEVATION**
AP-25	1.8 – 3.8 m
SAMPLE NO.	**SPECIMENS NO.**
5815T	1, 2, 3

COMPUTED BY	DATE	CHECKED BY	DATE	PREPARED BY

Auxiliary Tests: USBR 5300- 8 9, USBR 5800- 8 9

DESIGN DATA

1. Design cement content, decimal	0.120	
2. Laboratory maximum dry unit weight	19.63	kN/m³
3. Laboratory maximum dry density (2) x 101.97 [1/]	2002	kg/m³
4. Optimum moisture content, decimal	0.112	
5. Moisture content of soil, decimal	0.013	
6. Test batch volume	3.40×10^{-3}	m³

DESIGN MASSES PER BATCH (DRY SOIL)

7. Total dry mass at laboratory maximum dry density (3) x (6)	6.805	kg
8. Mass of dry soil (7) / [1.0 + (1)]	6.075	kg
9. Mass of cement (7) – (8)	0.730	kg
10. Mass of water (7) x [(4) + 0.003] [2/]	0.785	kg

DESIGN MASSES PER BATCH (MOIST SOIL)

11. Mass of moist soil (8) x [1.0 + (5)]	6.155	kg
12. Mass of additional water (10) – [(11) – (8)]	0.705	kg
13. Total wet mass of soil-cement (9) + (11) + (12)	7.590	kg

PLACEMENT DATA

	Specimen No. 1	Specimen No. 2	Specimen No. 3	
14. Mass of mold and specimen	4.410	4.405	4.415	kg
15. Mass of mold	2.315	2.315	2.315	kg
16. Mass of wet soil (14) – (15)	2.095	2.090	2.100	kg
17. Volume of mold [3/]	9.43×10^{-4}	9.43×10^{-4}	9.43×10^{-4}	m³
18. Wet density of specimen (16) / (17)	2222	2216	2227	kg/m³
19. Placement moisture content, decimal	0.113	0.113	0.112	
20. Dry density (18) / [1.0 + (19)]	1996	1991	2003	kg/m³
21. Dry unit weight (20) x [9.81 x 10–3] [4/]	19.58	19.53	19.65	kN/m³
22. Percent of LAB MAX [(21) / (2)] x 100	99.7	99.5	100.1	%
23. Variation from optimum $w_o - w_f$ [(4) – (19)] x 100	–0.1	–0.1	0.0	

1/ Two values are combined in the constant. To convert from unit weight (kN/m³) to density (kg/m³), divide by the acceleration of gravity (9.8067 m/s²) and multiply by 1,000.

2/ 0.3% moisture added to account for moisture loss caused by evaporation and hydration.

3/ To convert from cm³ to m³, divide by 10^6.

4/ Two values are combined in the constant. To convert from density (kg/m³) to unit weight (kN/m³), multiply by the acceleration of gravity (9.8067 m/s²) and divide by 1,000.

GPO 848 – 520

Figure 2B. – Preparation of soil-cement for molded durability test specimens (for soil containing 5 percent or less plus 4.75-mm aggregate).

7-2303 (6-85) Bureau of Reclamation	PREPARATION OF SOIL-CEMENT FOR MOLDED DURABILITY TEST SPECIMENS (for soil containing more than 5 percent plus No. 4 aggregate)	Designation USBR 5815- 8 9

PROJECT	FEATURE
EXAMPLE	EXAMPLE
LOCATION	DEPTH/ELEVATION
AP-25	3.5 – 7.5 ft.
SAMPLE NO.	SPECIMENS NO.
5815T	1, 2, 3

COMPUTED BY / DATE	CHECKED BY / DATE	PREPARED BY

Auxiliary Tests: USBR 5300- 8 9 USBR 5320- 8 9 USBR 5800- 8 9

DESIGN DATA

1. Design cement content, decimal	0.080	
2. Laboratory maximum dry unit weight	136.0	lbf/ft³
3. Optimum moisture content, decimal	0.060	
4. Percentage of plus No. 4 aggregate, decimal	0.209	
5. Specific gravity of plus No. 4 aggregate	2.56	
6. Moisture content of minus No. 4 soil, decimal	0.013	
7. Test batch volume	0.12	ft³

CORRECTIONS FOR PLUS NO. 4 AGGREGATE

8. Theoretical maximum unit weight of composite of minus No. 4 soil-cement with SSD aggregate added

$$\frac{1.0}{\frac{(4)}{62.4\ (5)} + \frac{1.0 - (4)}{(2)}}$$

140.4 lbf/ft³

9. Increase in unit weight (8) - (2) 4.4 lbf/ft³
10. Unit weight of additional cement required (9) x (1) 0.4 lbf/ft³
11. Dry unit weight of total material (8) + (10) 140.8 lbf/ft³

DESIGN MASSES PER BATCH

12. Dry mass of soil-cement per batch (11) x (7)	16.90	lbm 1/
13. Dry mass of soil and SSD aggregate (12) / [1.0 + (1)]	15.65	lbm
14. Dry mass of cement (12) - (13)	1.25	lbm
15. Dry mass of minus No. 4 soil (13) x [1.0 – (4)]	12.38	lbm
16. Mass of SSD aggregate (13) - (15)	3.27	lbm
17. Mass of water [(14) + (15)] x [(3) + 0.003] 2/	0.86	lbm
18. Mass of moist minus No. 4 soil (15) x [1.0 + (6)]	12.54	lbm
19. Mass of additional water (17) - [(18) - (15)]	0.70	lbm
20. Total wet mass of soil-cement (14) + (16) + (18) + (19)	17.76	lbm

PLACEMENT DATA

	Specimen No. 1	Specimen No. 2	Specimen No. 3	
21. Mass of mold and specimen	10.06	10.07	10.04	lbm
22. Mass of mold	5.10	5.10	5.10	lbm
23. Mass of wet soil (21) – (22)	4.96	4.97	4.94	lbm
24. Volume of mold	0.0333	0.0333	0.0333	ft³
25. Wet unit weight of specimen (23) / (24)	148.9	149.2	148.3	lbf/ft³
26. Placement moisture content minus No. 4 material, decimal	0.060	0.059	0.059	
27. Dry unit weight minus No. 4 material [(25) – (9)] / [1.0 + (26)]	136.3	136.7	135.9	lbf/ft³
28. Percent of LABMAX [(27) / (2)] x 100	100.2	100.5	99.9	%
29. Variation from optimum $w_o - w_f$ [(3) – (26)] x 100	0.0	0.0	0.1	

1/ For this application, 1-pound mass is considered to be numerically equal to 1-pound force.

2/ 0.3% moisture added to account for moisture loss caused by evaporation and hydration.

GPO 848 – 517

Figure 3A. – Preparation of soil-cement for molded durability test specimens (for soil containing more than 5 percent plus No. 4 aggregate).

7m-2303 (6-85) Bureau of Reclamation	PREPARATION OF SOIL-CEMENT FOR MOLDED DURABILITY TEST SPECIMENS (for soil containing more than 5 percent plus 4.75-mm aggregate)	Designation USBR 5815- 8 9

PROJECT	FEATURE
Example	Example
LOCATION	**DEPTH/ELEVATION**
AP-25	1.1 - 2.3 m
SAMPLE NO.	**SPECIMENS NO.**
5815T	1, 2, 3

COMPUTED BY	DATE	CHECKED BY	DATE	PREPARED BY

Auxiliary Tests: USBR 5300- 8 9 USBR 5320- 8 9 USBR 5800- 8 9

DESIGN DATA

1. Design cement content, decimal	0.080	
2. Laboratory maximum dry unit weight	21.37	kN/m³
3. Laboratory maximum dry density (2) x 101.97 [1/]	2179	kg/m³
4. Optimum moisture content, decimal	0.060	
5. Percentage of plus 4.75-mm aggregate, decimal	0.209	
6. Specific gravity of plus 4.75-mm aggregate	2.56	
7. Moisture content of minus 4.75-mm soil, decimal	0.013	
8. Test batch volume	3.4×10^{-3}	m³

CORRECTIONS FOR PLUS 4.75-mm AGGREGATE

9. Theoretical maximum density of composite of minus 4.75-mm soil-cement with SSD aggregate added $\frac{1.0}{\frac{(5)}{1000\,(6)} + \frac{1.0-(5)}{(3)}}$	2249	kg/m³
10. Increase in density (9) - (3)	70	kg/m³
11. Density of additional cement required (10) x (1)	6	kg/m³
12. Dry density of total material (9) + (11)	2255	kg/m³

DESIGN MASSES PER BATCH

13. Dry mass of soil-cement per batch (12) x (8)	7.665	kg
14. Dry mass of soil and SSD aggregate (13)/[1.0 + (1)]	7.095	kg
15. Dry mass of cement (13) - (14)	0.570	kg
16. Dry mass of minus 4.75-mm soil (14) x [1.0 - (5)]	5.610	kg
17. Mass of SSD aggregate (14) - (16)	1.485	kg
18. Mass of water [(15) + (16)] x [(4) + 0.003] [2/]	0.390	kg
19. Mass of moist minus 4.75-mm soil (16) x [1.0 + (7)]	5.685	kg
20. Mass of additional water (18) - [(19) - (16)]	0.315	kg
21. Total wet mass of soil-cement (15) + (17) + (19) + (20)	8.055	kg

PLACEMENT DATA

	Specimen No. 1	Specimen No. 2	Specimen No. 3	
22. Mass of mold and specimen	4.565	4.570	4.555	kg
23. Mass of mold	2.315	2.315	2.315	kg
24. Mass of wet soil (22) - (23)	2.250	2.255	2.240	kg
25. Volume of mold [3/]	9.43×10^{-4}	9.43×10^{-4}	9.43×10^{-4}	m³
26. Wet density of specimen (24) / (25)	2386	2391	2375	kg/m³
27. Placement moisture content minus 4.75-mm material, decimal	0.060	0.059	0.059	
28. Dry density minus 4.75-mm material $\frac{[(26)-(10)]}{[1.0+(27)]}$	2185	2192	2177	kg/m³
29. Dry unit weight minus 4.75-mm material (28) x [9.81 x 10-3] [4/]	21.43	21.50	21.36	kN/m³
30. Percent of LABMAX [(29) / (2)] x 100	100.3	100.6	100.0	%
31. Variation from optimum $w_o - w_f$ [(4) - (27)] x 100	0.0	0.1	0.1	

1/ Two values are combined in the constant. To convert from unit weight (kN/m³) to density (kg/m³), divide by the acceleration of gravity (9.8067 m/s²) and multiply by 1,000.

2/ 0.3% moisture added to account for moisture loss caused by evaporation and hydration.

3/ To convert from cm³ to m³, divide by 10^6.

4/ Two values are combined in the constant. To convert from density (kg/m³) to unit weight (kN/m³), multiply by the acceleration of gravity (9.8067 m/s²) and divide by 1,000.

GPO 848 - 518

Figure 3B. – Preparation of soil-cement for molded durability test specimens (for soil containing more than 5 percent plus 4.75-mm aggregate).

7-1802 (11-85)
Bureau of Reclamation

SOIL-CEMENT DURABILITY TESTS

Designation USBR 5820- __ __ (wet-dry) | Designation USBR 5825- __ __ (freeze-thaw)

PROJECT	FEATURE
Example	Example
LOCATION	DEPTH/ELEVATION
AP-25	3.5 - 7.5 ft
SAMPLE NO.	SPECIMENS NO.
5815T-5	1, 2, 3

TESTED BY	COMPUTED BY	DATE	CHECKED BY	DATE

Molded specimens from USBR 5815- 8 9 :

Date Formed 11-23-89 Cement Content 12.0 %

γ_{max} = 125.0 ☒ lbf/ft³ ☐ kN/m³, w_o = 9.8 %

	SPEC 1	SPEC 2	SPEC 3
Moisture Content	9.8	9.8	9.7
D-Value	99.8	99.8	99.7

Cored specimen from USBR 5835- __ __ :

Date Cored _____ Age _____ days

Cement Content _____ %

Average Diameter _____ ☐ in ☐ mm Length _____ ☐ in ☐ mm

Dry unit weight _____ ☐ lbf/ft³ ☐ kN/m³

		Specimen No. 1				Specimen No. 2				
Cycle No.	Date 19 __	Mass before brushing (g)	Mass after brushing (g)	Mass loss per cycle (g)	Accumulated mass loss (g)	Mass before brushing (g)	Mass after brushing (g)	Mass loss per cycle (g)	Accumulated mass loss (g)	Remarks
1										
2										
3										
4										
5										
6										
7										
8										
9										
10										
11										
12										

	Specimen No. 1	Specimen No. 2	
(1) Wet mass of specimen	_____ g	_____ g	
(2) Moisture content *	_____ %	_____ %	
(3) Initial dry mass of specimen	_____ g	_____ g	$\left\{ \frac{(1)}{1.0 + \frac{(2)}{100}} \right.$
(4) Total accumulated mass loss	_____ g	_____ g	
(5) Percent loss	_____ %	_____ %	$\left\{ \frac{(4)}{(3)} \times 100 \right.$

* Specimen No. ____ used for moisture content determination only. See back for calculations.

Figure 4. – Soil-cement durability tests — example.

ANNEX

A1. PROCEDURES FOR FORMING DURABILITY SPECIMENS WHEN MATERIAL RETAINED ON THE NO. 4 SIEVE IS PRESENT (INCH-POUND SYSTEM)

A1.1 Sieve an adequate quantity of representative pulverized soil on U.S.A. Standard series 1-inch, 3/4-inch, and No. 4 sieves. Discard any aggregate retained on the 1-inch sieve. Remove aggregate passing the 1-inch sieve and retained on the 3/4-inch sieve, and replace it with an equal mass of aggregate passing the 3/4-inch sieve and retained on the No. 4 sieve. Obtain aggregate for replacement from the original sample. Keep the aggregate and the minus No. 4 soil in separate containers.

NOTE A1.–This method for making soil-cement durability test specimens is used primarily with soils having 25 percent or less aggregate retained on the No. 4 sieve. The plus 3/4-inch soil is replaced in this procedure because 3/4 inch is the maximum allowable particle size in a 4.0-inch-diameter by 4.6-inch-high cylindrical specimen.

A1.2 Determine the specific gravity and absorption of the aggregate in accordance with USBR 5320.

A1.3 Aggregate used in this procedure is to be in a saturated surface dry condition. (See USBR 5320 and subpar. A1.9.)

A1.4 Calculate the theoretical maximum dry unit weight of the composite of the minus No. 4 soil-cement at laboratory maximum dry unit weight with SSD aggregate added using the following equation.

$$\gamma_o = \frac{1}{\frac{P}{\gamma_w G_a} + \frac{1 - P}{\gamma_{dLabMax}}} \quad (1A)$$

where:

γ_o = theoretical dry unit weight of composite of minus No. 4 soil-cement and SSD aggregate, lbf/ft³

P = percent SSD aggregate and expressed as a decimal

G_a = specific gravity of aggregate

γ_w = unit weight of water, 62.4 lbf/ft³

$\gamma_{dLabMax}$ = laboratory maximum dry unit weight of minus No. 4 soil-cement, lbf/ft³

A1.5 Calculate the increase in dry unit weight resulting from the addition of aggregate to the soil-cement mixture.

$$\gamma_i = \gamma_o - \gamma_{dLabMax} \quad (2A)$$

where γ_i equals increase in dry unit weight of soil-cement resulting from the addition of aggregate, lbf/ft³.

A1.6 Calculate the dry unit weight of the additional cement required as a result of the increase in dry unit weight.

$$\gamma_{ic} = \gamma_i C \quad (3A)$$

where:

γ_{ic} = dry unit weight of additional cement required as a result of the increase in dry unit weight, lbf/ft³

C = design percent cement and expressed as a decimal

A1.7 Calculate the dry unit weight of the total soil-cement mixture.

$$\gamma_t = \gamma_o + \gamma_{ic} \quad (4A)$$

where γ_t equals dry unit weight of the total soil-cement mixture, lbf/ft³.

A1.8 Calculate the dry mass of soil-cement per batch. Convert unit weight to density by changing lbf/ft³ to lbm/ft³ (see note A1).

$$m_{bat} = \rho_t V \quad (5A)$$

where:

m_{bat} = total dry mass of soil-cement per batch, lbm

V = test batch volume of 0.12 ft³ is recommended

ρ_t = unit weight converted to density, lbm/ft³

NOTE A2.–For this application, a 1-pound mass is considered to be numerically equal to a 1-pound force.

A1.9 Calculate the design masses of dry soil, SSD aggregate, cement, and water for a test batch.

$$m_{s+a} = \frac{m_{bat}}{(1 + C)} \quad (6A)$$

$$m_c = m_{bat} - m_{s+a} \quad (7A)$$

$$m_s = \frac{m_{s+a}}{(1 + P)} \quad (8A)$$

$$m_a = m_{s+a} - m_s \quad (9A)$$

$$m_w = (m_c + m_s)(w_o + 0.003) \quad (10A)$$

where:

m_{s+a} = dry mass of soil and (SSD) saturated surface dry aggregate, lbm

m_c = mass of cement, lbm

m_s = dry mass of minus No. 4 soil, lbm

m_a = mass of SSD aggregate, lbm

m_w = mass of water, lbm

w_o = optimum moisture content and expressed as a decimal

0.003 = percent of additional water required to compensate for moisture loss caused by evaporation and cement hydration and expressed as a decimal

A1.10 Calculate the masses of moist soil and additional water necessary for a test batch.

$$m_{sm} = m_s (1 + w_f) \quad (11A)$$

$$m_{wa} = m_w - (m_{sm} - m_s) \quad (12A)$$

where:

m_{sm} = mass of moist minus No. 4 soil, lbm
w_f = moisture content of minus No. 4 soil and expressed as a decimal
m_{wa} = mass of additional water to be added, lbm

A1.11 Calculate the total wet mass of soil-cement for a test batch.

$$m_{tw} = m_{sm} + m_c + m_{wa} + m_a \quad (13A)$$

where m_{tw} equals total wet mass of soil-cement, lbm.

A1.12 Follow the main procedure beginning at subparagraph 13.3. Mix the aggregate in with the entire batch until the aggregate is uniformly distributed throughout.

A1M. PROCEDURES FOR FORMING DURABILITY TEST SPECIMENS WHEN MATERIAL RETAINED ON THE 4.75-MM SIEVE IS PRESENT (SI SYSTEM)

A1.1M Sieve an adequate quantity of representative soil on U.S.A. Standard series 25.0-, 19.0-, and 4.75-mm sieves. Discard any aggregate retained on the 25.0-mm sieve. Remove aggregate passing the 25.0-mm sieve and retained on the 19.0-mm sieve, and replace it with an equal mass of aggregate passing the 19.0-mm sieve and retained on the 4.75-mm sieve. Obtain aggregate for replacement from the original sample. Keep the aggregate and the minus 4.75-mm soil in separate containers.

NOTE A1.1M–This method for making soil-cement durability test specimens is used primarily with soils having 25 percent or less aggregate retained on the 4.75-mm sieve. The plus 19.0-mm soil is replaced in this procedure because 19.0-mm is the maximum allowable particle size in a 102-mm-diameter by 116-mm-high cylindrical specimen.

A1.2M Determine the specific gravity and absorption of the aggregate in accordance with USBR 5320.

A1.3M Aggregate used in this procedure is to be in a saturated surface dry condition. (See USBR 5320 and subpar. A1.9.)

A1.4M Convert the laboratory maximum dry unit weight (kN/m³) to laboratory maximum dry density (kg/m³).

$$\rho_{dLabMax} = 101.97\ (\gamma_{dLabMax}) \quad (1M)$$

where:

$\rho_{dLabMax}$ = laboratory maximum dry density of minus 4.75-mm soil-cement, kg/m³
$\gamma_{dLabMax}$ = laboratory maximum dry unit weight of minus 4.75-mm soil-cement, kN/m³
101.97 = convert kN/m³ to kg/m³

NOTE A1.2M–Two values are combined in the above constant. To convert from unit weight kN/m³, to density kg/m³, divide by the acceleration of gravity (9.8067 m/s²) and multiply by 1000.

A1.5M Calculate the theoretical maximum dry density of the composite of the minus 4.75-mm soil-cement at laboratory maximum density with SSD aggregate added using the following equation.

$$\rho_o = \frac{1}{\frac{P}{\rho_w G_a} + \frac{1 - P}{\rho_{dLabMax}}} \quad (2M)$$

where:

ρ_o = theoretical dry density of composite of minus 4.75-mm soil-cement and SSD aggregate, kg/m³
P = percent SSD aggregate and expressed as a decimal
G_a = specific gravity of aggregate
ρ_w = density of water, 1000 kg/m³

A1.6M Calculate the increase in dry density resulting from the addition of aggregate to the soil-cement mixture.

$$\rho_i = \rho_o - \rho_{dLabMax} \quad (3M)$$

where ρ_i equals increase in dry density of soil-cement resulting from the addition of aggregate, kg/m³.

A1.7M Calculate the dry density of the additional cement required as a result of the increase in dry density.

$$\rho_{ic} = \rho_i C \quad (4M)$$

where:

ρ_{ic} = dry density of additional cement required as a result of the increase in dry density, kg/m³
C = design percent cement and expressed as a decimal

A1.8M Calculate the dry density of the test soil-cement mixture.

$$\rho_t = \rho_o + \rho_{ic} \quad (5M)$$

where ρ_t equals dry density of the total soil-cement mixture, kg/m³.

A1.9M Calculate the dry mass of soil-cement per batch.

$$m_{bat} = \rho_t V \quad (6M)$$

where:

m_{bat} = total dry mass of soil-cement per batch, kg
V = test batch volume of 0.0034 m^3 is recommended

A1.10M Calculate the design masses of dry soil, SSD aggregate, cement, and water for a test batch.

$$m_{s+a} = \frac{m_{bat}}{(1 + C)} \quad (7M)$$

$$m_c = m_{bat} - m_{s+a} \quad (8M)$$

$$m_s = \frac{m_{s+a}}{(1 + P)} \quad (9M)$$

$$m_a = m_{s+a} - m_s \quad (10M)$$

$$m_w = (m_c + m_s)(w_o + 0.003) \quad (11M)$$

where:

m_{s+a} = dry mass of minus 4.75-mm soil and SSD aggregate, kg
C = design percent cement and expressed as a decimal
m_c = mass of cement, kg
m_s = dry mass of minus 4.75-mm soil, kg
m_a = mass of SSD aggregate, kg
m_w = mass of water, kg
w_o = optimum moisture content and expressed as a decimal
0.003 = percent of additional water required to compensate for moisture loss caused by evaporation and by cement hydration and expressed as a decimal

A1.11M Calculate the masses of moist minus 4.75-mm soil and additional water necessary for a test batch.

$$m_{sm} = m_s (1 + w_f) \quad (12M)$$

$$m_{wa} = m_w - (m_{sm} - m_s) \quad (13M)$$

where:

m_{sm} = mass of moist minus 4.75-mm soil, kg
w_f = moisture content of minus 4.75-mm soil and expressed as a decimal
m_{wa} = mass of additional water to be added, kg

A1.12M Calculate the total wet mass of soil-cement for a test batch.

$$m_{tw} = m_{sm} + m_c + m_{wa} + m_a \quad (14M)$$

where m_{tw} equals total wet mass of soil-cement, kg.

A1.13M Follow the main procedure beginning at subparagraph 13.3. Mix the aggregate in with the entire batch until the aggregate is uniformly distributed throughout.

UNITED STATES DEPARTMENT OF THE INTERIOR
BUREAU OF RECLAMATION

USBR 5820-89

PROCEDURE FOR

PERFORMING WET-DRY DURABILITY TESTING OF COMPACTED SOIL-CEMENT MIXTURES

INTRODUCTION

This procedure is under the jurisdiction of the Geotechnical Services Branch, code D-3760, Research and Laboratory Services Division, Denver Office, Denver, Colorado. The procedure is issued under the fixed designation USBR 5820. The number immediately following the designation indicates the year of acceptance or the year of last revision.

This procedure is similar to the standard for wet-dry durability testing described in ASTM D 559, except that this procedure contains a rewritten and more detailed description and includes USBR data forms. The procedure for preparing soil-cement durability test specimens has been written as a separate procedure (USBR 5815). Corresponding forms in SI units are included. The SI forms have the letter M following the first digit in the form number.

1. Scope

1.1 This designation outlines the procedure for determining soil-cement mass losses resulting from repeated wetting and drying of hardened soil-cement, using as test specimens either laboratory-compacted specimens or field-cored cylinders.

1.2 The mass loss obtained using this procedure is an indication of the wet-dry durability of compacted, hydrated soil-cement.

2. Auxiliary Tests

2.1 The laboratory-compacted soil-cement cylinders must be prepared in accordance with USBR 5815. The initial wet mass and moisture content for the compacted cylinders are determined from a test specimen in accordance with USBR 5300. Field-cored soil-cement cylinders must be obtained in accordance with USBR 5835. As part of the specimen preparation, a moisture content is obtained in accordance with USBR 5300 and the dry unit weight determined in accordance with USBR 5370.

3. Applicable Documents

3.1 *USBR Procedures*:
USBR 3900 Standard Definitions of Terms and Symbols Relating to Soil Mechanics
USBR 5300 Determining Moisture Content of Soil and Rock by the Oven Method
USBR 5370 Determining Unit Weight of Cylindrical Soil Specimens
USBR 5810 Performing Compressive Strength Testing of Soil-Cement Cylinders
USBR 5815 Preparing Soil-Cement Specimens for Durability Testing
USBR 5825 Performing Freeze-Thaw Durability Testing of Compacted Soil-Cement Mixtures
USBR 5835 Performing Record Coring and Cross Sectioning of Compacted Soil-Cement

3.2 *ASTM Standards*:
C 511 Specification for Moist Cabinets, Moist Rooms, and Water Storage Tanks Used in the Testing of Hydraulic Cements and Concretes
D 559 Specification for Wetting and Drying Tests of Compacted Soil-Cement Mixtures

4. Summary of Method

4.1 Laboratory-compacted or field-cored soil-cement cylindrical specimens are subjected to 12 cycles of wetting and drying. Each cycle consists of submerging the specimens for 5 hours in potable water at room temperature and drying it for 42 hours in an oven at 160 °F (71 °C). The specimens are then wire-brushed. The mass of each soil-cement specimen is determined before and after each brushing to determine the mass loss. Mass losses from 12 cycles of wetting and drying are accumulated. The total percent of mass loss is calculated for each specimen. The average total mass loss for all specimens is an indication of the durability of the compacted, cured soil-cement.

5. Significance and Use

5.1 Soil-cement wet-dry durability testing is performed to determine the accumulated soil-cement mass losses produced by repeated wetting and drying.

5.2 The wet-dry durability test is one of a set of tests normally performed to evaluate the adequacy of compacted soil-cement. The other tests are freeze-thaw durability (USBR 5825) and compressive strength (USBR 5810).

5.3 Laboratory-compacted soil-cement specimens are tested to determine the cement content to be specified in a soil-cement mix design. Based on satisfactory performance of existing soil-cement structures, Bureau criteria require accumulated wet-dry durability mass losses of 6.0 percent or less following 12 cycles of wetting and drying. Unconfined compressive strength testing is conducted prior to durability testing to eliminate mix designs that do not

meet compressive strength criteria. An economical mix design uses the minimum cement content that meets both strength and durability requirements.

5.4 Wet-dry durability tests are also conducted on field-cored specimens obtained during construction of the compacted soil-cement structure for construction control and record purposes to ensure that the soil-cement has met wet-dry durability requirements.

6. Terminology

6.1 Definitions are in accordance with USBR 3900.

6.2 Terms not included in USBR 3900 specific to this designation are:

6.2.1 *Cement Content.*–Amount of cement in a soil-cement mixture, specified as a percent of dry soil mass.

6.2.2 *Soil-Cement Moisture Content.*–Ratio of the mass of water to the total dry mass of a soil-cement mixture, expressed as a percent.

7. Apparatus

7.1 *General Apparatus*:

7.1.1 *Platform Scale.*–A typical platform scale used for this designation must be readable to 0.01 lbm and have a capacity of about 25 lbm. An electronic digital readout scale should not be used.

7.1.2 *Balance or Scale.*–A typical balance or scale used for this designation must be readable to 0.1 gram and have a capacity of about 3000 grams.

7.1.3 *Moist Room or Water Bath.*–A moist room or water bath, capable of maintaining a uniform temperature of 73.4±3.0 °F (23.0±1.7 °C) and a relative humidity of not less than 95 percent, conforming to the requirements of ASTM C 511.

7.2 *Equipment Unique to This Procedure*:

7.2.1 *Drying Oven.*–An oven, thermostatically controlled, preferably of the forced-draft type, capable of maintaining a uniform temperature of 160±5 °F (71±3 °C) throughout the drying chamber, for drying compacted soil-cement specimens.

7.2.2 *Water Bath.*–A suitable tank for submerging compacted specimens in water at room temperature.

7.2.3 *Wire Brush.*–A wire brush made of 2- by 1/16-inch (50- by 2-mm) flat No. 26 gauge (0.46-mm) wire bristles assembled in 50 groups of 10 bristles each and mounted to form 5 longitudinal rows and 10 transverse rows of bristles on a 7-1/2- by 2-1/2-inch (190- by 60-mm) hardwood block.

7.3 *Miscellaneous Equipment.*–Suitable pans for transporting test specimens, small brush with soft bristles for removing residue from specimens.

8. Precautions

8.1 *Safety Precautions*:

8.1.1 This designation may involve hazardous materials, operations, and equipment.

8.1.2 Wear safety glasses when brushing specimens.

9. Sampling, Test Specimens, and Test Units

9.1 *Preparation of Laboratory-Compacted Test Specimens*:

9.1.1 Prepare three laboratory-compacted test specimens in accordance with USBR 5815.

9.1.2 At the end of the 7-day storage period in the moist room, dry one of the specimens to constant mass and determine the moisture content in accordance with USBR 5300. Record on the "Soil-Cement Durability Tests" form (fig. 1A or 1B). This moisture content is used to determine the dry mass for the other two test specimens.

9.1.3 At the end of the 7-day storage period in the moist room, determine and record the wet mass of the remaining two test specimens. Using the moisture content obtained in subparagraph 9.1.2, calculate the initial dry mass of the two test specimens. Record on the "Soil-Cement Durability Tests" form (fig. 1A or 1B).

9.2 *Preparation of Field-Cored Test Specimens*:

9.2.1 Obtain field-cored test specimens in accordance with USBR 5835.

9.2.2 Cut the 4.0-inch (102-mm) diameter core to obtain a test specimen 4.6±0.1-inch (117-mm±3-mm) long. When using a 3.0-inch (76-mm) diameter core, cut to a length of 7.3±0.1 inch (185±3 mm). This results in approximately the same surface area as a standard 4.0-inch (102-mm) diameter by 4.6-inch (117-mm) long specimen.

9.2.3 From the remainder of the core, cut at least a 1-inch (25-mm) length for use in determining the moisture content of the field-cored specimen.

9.2.4 Dry the moisture specimen to constant mass and determine the moisture content in accordance with USBR 5300. Record on the "Moisture Content and Unit Weight Determination of Cylindrical Specimens" form (fig. 2A or 2B).

9.2.5 Determine the measured dry unit weight of the specimen in accordance with USBR 5370. Record on the "Moisture Content and Unit Weight Determination of Cylindrical Specimens" form (fig. 2A or 2B).

9.2.6 Transfer data obtained in subparagraph 9.2.4 and 9.2.5 to the "Soil-Cement Durability Tests" form (fig. 1A or 1B).

9.2.7 Determine the wet mass of the test specimen. Using the moisture content obtained in subparagraph 9.2.4, calculate the initial dry mass of the test specimen. Record on the "Soil-Cement Durability Tests" form (fig. 1A or 1B).

10. Calibration and Standardization

10.1 Verify that equipment is currently calibrated in accordance with the applicable calibration procedure. If the calibration is not current, perform the calibration before using the equipment for this procedure.

10.2 The technician who will brush the specimens must practice to ensure that 3 lbm (1.4 kg) is applied to the specimen during brushing. To measure the 3 lbm, hold the specimen in a vertical position on the edge of a platform scale and zero the scale. Apply vertical downward brushing

strokes to the specimen, and note the force necessary to register approximately 3 lbm (fig. 3).

11. Conditioning

11.1 *Laboratory-Compacted Test Specimens.*–Cure the laboratory-compacted test specimens in accordance with USBR 5815.

11.2 *Field-Cored Test Specimens.*–Place cored specimens in the moist room for 24 hours prior to the first cycle of testing.

11.3 *Oven Temperatures.*–Set and maintain the temperature of the oven to be used for the drying portion of the wet-dry durability test at 160 °F (71 °C).

12. Procedure

12.1 All data are to be recorded on the "Soil-Cement Durability Tests" form as shown on figure 1A or 1B. Figure 1A is an example for laboratory-compacted specimens, and figure 1B is an example for field-cored specimens.

12.2 Record the wet mass, moisture content, and initial dry mass as determined in subparagraph 9.1 for laboratory-compacted test specimens, and in subparagraph 9.2 for field-cored test specimens.

12.3 Submerge the test specimen in potable water at room temperature for a period of 5 hours and remove.

12.4 Place the test specimen in an oven at 160 °F (71 °C) for 42 hours and remove. Determine and record the mass of the specimen to the nearest 0.1 gram.

12.5 Give each specimen two firm strokes on all areas with the wire brush. Hold the brush with the long axis of the brush parallel to the longitudinal axis of the specimen or parallel to the ends as required to cover all of the specimen. Apply these strokes to the full height and width of the specimen with a firm stroke corresponding to approximately 3 lbm (1.4 kg). To measure the 3 lbm, hold the specimen in a vertical position on the edge of a platform scale and zero the scale. Apply vertical brushing strokes to the specimen, and note the force necessary to register approximately 3 lbm as shown on figure 3. Eighteen to twenty vertical brush strokes are required to cover the sides of the specimen twice, and four strokes are required on each end.

12.6 Using a soft bristle brush, carefully brush any residue from the specimen.

12.7 Determine the mass of the specimen and record to the nearest 0.1 gram. Turn the specimen end for end before placing in water.

12.8 Calculate and record the mass loss for each cycle and the accumulated mass loss to the nearest 0.1 gram.

12.9 The procedures described in subparagraphs 12.3 through 12.8 constitute one cycle (48 hours) of wetting and drying. Repeat this cycle 12 times. If it is not possible to run the cycles continuously because of weekends, holidays, or for other reasons, keep the specimens in the oven during the layover period; note this on the form.

12.10 For laboratory-compacted specimens, complete the data that is required on the form from information obtained from the specimen preparation (subpar. 9.1).

12.11 For field-cored specimens, complete the data that is required on the form from information obtained from the specimen preparation (subpar. 9.2).

12.12 Calculate and record the percent mass loss to the nearest 0.01 percent.

13. Calculations

13.1 Calculate the mass loss per cycle:

$$A = B - C \qquad (1)$$

where:

A = mass loss per cycle, g
B = mass before brushing, g
C = mass after brushing, g

13.2 Calculate the mass loss of the test specimen as a percent (percent loss) of the initial oven dry mass:

$$\text{Percent loss, } \% = 100\left(\frac{m_t}{m_{id}}\right) \qquad (2)$$

where:

m_t = total accumulated mass loss, g
m_{id} = initial dry mass of specimen, g
100 = convert to percent, %

13.2.1 An example calculation follows for determining the percent of mass loss of a test specimen due to wet-dry durability testing.

m_t = total accumulated mass loss = 27.8 g
m_{id} = initial dry mass of specimen = 1610.1 g

$$\text{Percent loss} = 100\left(\frac{27.8\text{ g}}{1610.1\text{ g}}\right) = 1.73\%$$

14. Report

14.1 The report is to consist of the following completed and checked forms:

"Soil-Cement Durability Tests" (fig. 1A or 1B).

"Moisture Content and Unit Weight Determination of Cylindrical Specimens" (fig. 2A or 2B).

14.2 All calculations are to show a checkmark.

7-1802 (11-85)
Bureau of Reclamation

SOIL-CEMENT DURABILITY TESTS

Designation USBR 5820- 8 9 (wet-dry) ☒ Designation USBR 5825- __ __ (freeze-thaw) ☐

PROJECT	FEATURE
Example	Example
LOCATION	DEPTH/ELEVATION
AP-25	3.5 - 7.5 ft
SAMPLE NO.	SPECIMENS NO.
5820T	1, 2, 3

TESTED BY	COMPUTED BY	DATE	CHECKED BY	DATE

Molded specimens from USBR 5815- 8 9 :

Date Formed 11-23-89 Cement Content 12.0 %

γ_{max} = 125.0 ☒ lbf/ft³ ☐ kN/m³, w_o = 9.8 %

	SPEC 1	SPEC 2	SPEC 3
Moisture Content	9.8	9.8	9.7
D-Value	99.8	99.8	99.7

Cored specimen from USBR 5835- __ __ :

Date Cored _____ Age _____ days

Cement Content _____ %

Average Diameter _____ ☐ in ☐ mm Length _____ ☐ in ☐ mm

Dry unit weight _____ ☐ lbf/ft³ ☐ kN/m³

		Specimen No. 1				Specimen No. 2				
Cycle No.	Date 19 89	Mass before brushing (g)	Mass after brushing (g)	Mass loss per cycle (g)	Accumulated mass loss (g)	Mass before brushing (g)	Mass after brushing (g)	Mass loss per cycle (g)	Accumulated mass loss (g)	Remarks
1	11-30	1722.8	1719.9	2.9	2.9	1728.2	1726.4	1.8	1.8	
2	12-3	1708.2	1705.2	3.0	5.9	1716.2	1714.2	2.0	3.8	*
3	12-5	1709.8	1707.2	2.6	8.5	1718.0	1716.0	2.0	5.8	
4	12-7	1723.0	1720.8	2.2	10.7	1732.0	1730.0	2.0	7.8	
5	12-10	1714.9	1713.2	1.7	12.4	1724.0	1722.5	1.5	9.3	*
6	12-12	1704.0	1701.0	3.0	15.4	1712.8	1710.0	2.8	12.1	
7	12-14	1714.0	1711.8	2.2	17.6	1724.0	1721.8	2.2	14.3	
8	12-17	1714.0	1711.9	2.1	19.7	1724.8	1723.0	1.8	16.1	*
9	12-19	1696.4	1694.0	2.4	22.1	1706.2	1704.0	2.2	18.3	
10	12-21	1705.0	1702.8	2.2	24.3	1714.5	1712.8	1.7	20.0	
11	12-24	1699.8	1698.1	1.7	26.0	1710.4	1709.0	1.4	21.4	*
12	12-26	1685.3	1683.5	1.8	27.8	1696.7	1694.8	1.9	23.3	

	Specimen No. 1	Specimen No. 2	
(1) Wet mass of specimen	1722.8 g	1728.2 g	* Specimens kept in oven during lay-over period.
(2) Moisture content *	7.0 %	7.0 %	
(3) Initial dry mass of specimen	1610.1 g	1615.1 g	$\left\{ \frac{(1)}{1.0 + \frac{(2)}{100}} \right.$
(4) Total accumulated mass loss	27.8 g	23.3 g	
(5) Percent loss	1.73 %	1.44 %	$\left\{ \frac{(4)}{(3)} \times 100 \right.$

* Specimen No. 3 used for moisture content determination only. See back for calculations.

Figure 1A. - Soil-cement durability tests — laboratory-compacted specimen example.

7-1802 (11-85)
Bureau of Reclamation

SOIL-CEMENT DURABILITY TESTS

Designation USBR 5820- 8 9 (wet-dry) ☒ Designation USBR 5825- __ __ (freeze-thaw) ☐

PROJECT	FEATURE
Example	Example
LOCATION	DEPTH/ELEVATION
APC-18	4.0 - 5.6 ft
SAMPLE NO.	SPECIMENS NO.
5820T	14, 16

TESTED BY | COMPUTED BY | DATE | CHECKED BY | DATE

Molded specimens from USBR 5815- __ __ :

Date Formed _____ Cement Content _____ %

γ_{max} = _____ ☐ lbf/ft³ ☐ kN/m³, w_o = _____ %

	SPEC 1	SPEC 2	SPEC 3
Moisture Content			
D-Value			

Cored specimen from USBR 5835- 8 9 :

Date Cored 11-23-89 Age 28 days

Cement Content 12 %

Average Diameter 3.89 ☒ in ☐ mm Length 4.57 ☒ in ☐ mm

Dry unit weight 134.2 ☒ lbf/ft³ ☐ kN/m³

		Specimen No. 14				Specimen No. ____				
Cycle No.	Date 19 89	Mass before brushing (g)	Mass after brushing (g)	Mass loss per cycle (g)	Accumulated mass loss (g)	Mass before brushing (g)	Mass after brushing (g)	Mass loss per cycle (g)	Accumulated mass loss (g)	Remarks
1	11-30	1788.1	1787.6	0.5	0.5					
2	12-3	1747.5	1747.0	0.5	1.0					*
3	12-5	1761.4	1761.1	0.3	1.3					
4	12-7	1760.0	1759.6	0.4	1.7					
5	12-10	1758.3	1758.0	0.3	2.0					*
6	12-12	1764.9	1764.3	0.6	2.6					
7	12-14	1751.4	1751.0	0.4	3.0					
8	12-17	1762.3	1761.8	0.5	3.5					*
9	12-19	1763.7	1763.1	0.6	4.1					
10	12-21	1750.8	1750.2	0.6	4.7					
11	12-24	1760.4	1759.7	0.7	5.4					*
12	12-26	1757.0	1756.5	0.5	5.9					

	Specimen No. 14	Specimen No. ____	
(1) Wet mass of specimen	1788.1 g	_____ g	* Specimen kept in oven during lay-over period.
(2) Moisture content *	1.8 %	_____ %	
(3) Initial dry mass of specimen	1756.5 g	_____ g	$\left\{ \frac{(1)}{1.0 + \frac{(2)}{100}} \right.$
(4) Total accumulated mass loss	5.9 g	_____ g	
(5) Percent loss	0.34 %	_____ %	$\left\{ \frac{(4)}{(3)} \times 100 \right.$

* Specimen No. 16 used for moisture content determination only. See back for calculations.

Figure 1B. – Soil-cement durability tests — field-cored specimen example.

7-2338 (12-86) Bureau of Reclamation

MOISTURE CONTENT AND UNIT WEIGHT DETERMINATION OF CYLINDRICAL SPECIMENS

Designation USBR 5370 - 89

SAMPLE NO.	PROJECT	FEATURE
5820T	Example	Example

SPECIMEN NO.	HOLE NO.	DEPTH
14	APC-18	4.0-5.6 ft.

TESTED BY	DATE	COMPUTED BY	DATE	CHECKED BY	DATE

	Soil specimen diameter	a		3.86 (in)
		b		3.93 (in)
		c		3.82 (in)
(1)	Average specimen diameter			3.87 (in)
(2)	Soil specimen area		= 0.7854 x (1)^2	11.76 (in^2)
	Length of soil specimen	a		4.57 (in)
		b		4.53 (in)
		c		4.57 (in)
(3)	Average length of soil specimen			4.56 (in)
(4)	Soil specimen volume		= (2) x (3)	53.63 (in^3)
(5)	Wet mass of soil specimen			4.24 (lbm)
(6)	Wet density		= (5) x 1728/(4)	136.6 (lbm/ft^3)
(7)	Wet unit weight*			136.6 (lbf/ft^3)
(20)	Dry unit weight		= (7)/[1 + (19)/100]	134.2 (lbf/ft^3)

	Moisture content		Top		Bottom	
			+ No. 4	- No. 4	+ No. 4	- No. 4
	Dish No.			218		
	Mass of dish + wet soil	(g)		282.1		
	Mass of dish + dry soil	(g)		279.2		
	Mass of dish	(g)		121.8		
	Mass of water	(g)		2.9		
	Mass of dry soil	(g)		157.4		
(8)	Moisture content + No. 4 **	(%)				
(9)	Moisture content - No. 4 **	(%)		1.8		
	Complete the following only if + No. 4 is present:					
(10)	Total wet mass of moisture specimen	(g)				
(11)	Mass of wet + No. 4	(g)				
(12)	Mass of wet - No. 4	(g)				
(13)	Mass of dry + No. 4	(g)				
(14)	Mass of dry - No. 4	(g)				
(15)	Mass of dry moisture specimen (+ No. 4) + (- No. 4)	(g)				
(16)	Percentage of particle size					
(17)	Percentage of particle size					
(18)	Moisture content of total specimen ***	(%)				
(19)	Average moisture content	(%)		1.8		

Remarks: Cut 4.57 inch long specimen from 6.02 inch long piece of core representing a compaction lift. Specimen used for wet-dry durability testing.

Auxiliary Test:

USBR 5300 - 89

* Implies 1lbm = 1lbf

** If + No. 4 is not porous, a moisture content (% absorption) of 1.5 percent may be assumed for + No. 4 material only.

*** $(18) = \frac{(16) \times (8)}{100} + \frac{(17) \times (9)}{100}$

Constants: 0.7854 = $\pi/4$

1728 = Convert in^3 to ft^3

GPO 850 - 056

Figure 2A. - Moisture content and unit weight determination of cylindrical specimens (in-lb example).

7M-2338 (5-86) Bureau of Reclamation	MOISTURE CONTENT AND UNIT WEIGHT DETERMINATION OF CYLINDRICAL SPECIMENS	Designation USBR 5370 - 89

SAMPLE NO.	PROJECT	FEATURE
5820T	Example	Example

SPECIMEN NO.	HOLE NO.	DEPTH
14	APC - 18	1.2 - 1.7 m

TESTED BY	DATE	COMPUTED BY	DATE	CHECKED BY

	Soil specimen diameter	a	98.1	(mm)
		b	99.7	(mm)
		c	97.0	(mm)
(1)	Average soil specimen diameter		98.3	(mm)
(2)	Soil specimen diameter in centimeters	= (1)/10	9.83	(cm)
(3)	Soil specimen area	= 0.7854 x $(2)^2$	75.89	(cm^2)
	Length of soil specimen	a	116.0	(mm)
		b	115.0	(mm)
		c	116.0	(mm)
(4)	Average length of soil specimen		115.7	(mm)
(5)	Average length of soil specimen	= (4)/10	11.57	(cm)
(6)	Soil specimen volume	= (3) x (5)	878.0	(cm^3)
(7)	Wet mass of soil specimen		1950	(g)
(20)	Wet density	= (7) x 1000/(6)	2220	(kg/m^3)
(21)	Wet unit weight	= (20) x 0.009807	21.77	(kN/m^3)
(22)	Dry unit weight	= (21)/[1 + (19)/100]	21.39	(kN/m^3)

	Moisture content		Top		Bottom	
			+ No. 4	- No. 4	+ No. 4	- No. 4
	Dish No.			28		
	Mass of dish + wet soil	(g)		281.1		
	Mass of dish + dry soil	(g)		279.2		
	Mass of dish	(g)		121.8		
	Mass of water	(g)		2.9		
	Mass of dry soil	(g)		157.4		
(8)	Moisture content + No. 4*	(%)				
(9)	Moisture content – No. 4*	(%)		1.8		
	Complete the following only if + No. 4 is present:					
(10)	Total wet mass of moisture specimen	(g)				
(11)	Mass of wet + No. 4	(g)				
(12)	Mass of wet – No. 4	(g)				
(13)	Mass of dry + No. 4	(g)				
(14)	Mass of dry – No. 4	(g)				
(15)	Mass of dry moisture specimen (+ No. 4) + (– No. 4)	(g)				
(16)	Percentage of particle size					
(17)	Percentage of particle size					
(18)	Moisture content of total specimen **	(%)				
(19)	Average moisture content	(%)	1.8			

Remarks: Cut 115.7mm long specimen from 153.0 long piece of core representing a compaction lift. Specimen used for wet-dry durability testing.

Auxiliary Test:
USBR 5300 - 89

* If + No. 4 is not porous, a moisture content (% absorption) of 1.5 percent may be assumed for + No. 4 material only.

** $$18 = \frac{(16) \times (8)}{100} + \frac{(17) \times (9)}{100}$$

Constants: 0.7854 = $\pi/4$

1000 = Convert g/cm^3 to kg/m^3

0.009807 = Convert kg to kN

GPO 851-058

Figure 2B. - Moisture content and unit weight determination of cylindrical specimens (SI example).

(a) Brush strokes applied to a soil-cement durability test specimen registering a 3-lbm on platform scale.

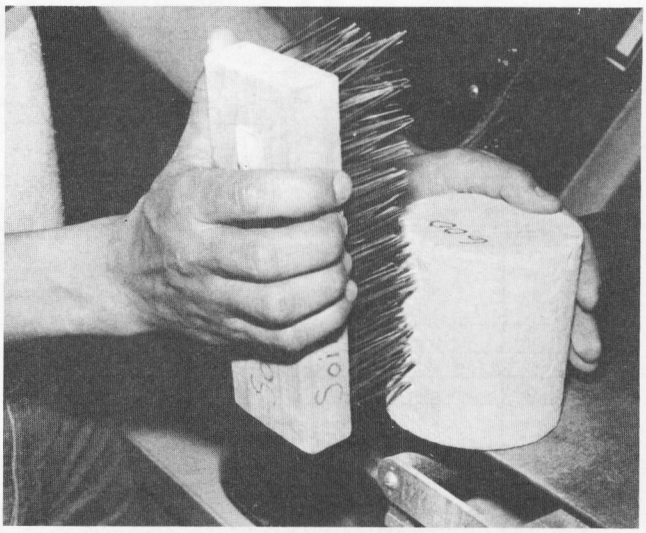

(b) Closeup view of downward vertical brushing strokes applied to the sides of a soil-cement durability test specimen.

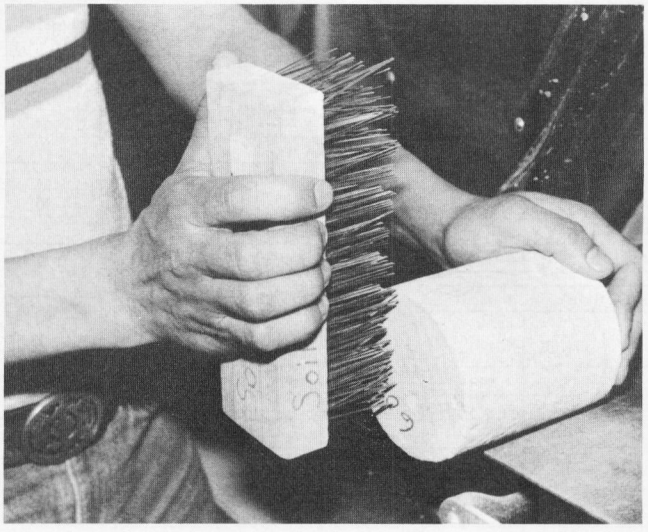

(c) Closeup view of brush strokes applied to the end of a soil-cement durability test specimen.

Figure 3. – Brushing strokes require practice to apply necessary force.

UNITED STATES DEPARTMENT OF THE INTERIOR
BUREAU OF RECLAMATION

USBR 5825-89

PROCEDURE FOR

PERFORMING FREEZE-THAW DURABILITY TESTING OF COMPACTED SOIL-CEMENT MIXTURES

INTRODUCTION

This procedure is under the jurisdiction of the Geotechnical Services Branch, code D-3760, Research and Laboratory Services Division, Denver Office, Denver, Colorado. The procedure is issued under the fixed designation USBR 5825. The number immediately following the designation indicates the year of acceptance or the year of last revision.

This procedure is similar to the procedure for freeze-thaw durability testing described in ASTM D 560, except that this procedure contains a rewritten and more detailed description and includes USBR data forms. The procedure for preparing soil-cement durability test specimens has been written as a separate procedure (USBR 5815). Corresponding forms in SI units are included. The SI forms have the letter M following the first digit in the form number.

1. Scope

1.1 This designation outlines the procedure for determining soil-cement mass losses resulting from repeated freezing and thawing of hardened soil-cement, using as test specimens either laboratory-compacted specimens or field-cored cylinders.

1.2 The mass loss obtained using this procedure is an indication of the freeze-thaw durability of compacted, hydrated soil-cement.

2. Auxiliary Tests

2.1 The laboratory-compacted soil-cement cylinders must be prepared in accordance with USBR 5815. The initial wet mass and moisture content for the compacted cylinders are determined from a test specimen in accordance with USBR 5300. Field-cored soil-cement cylinders must be obtained in accordance with USBR 5835. As part of the specimen preparation, a moisture content is obtained in accordance with USBR 5300 and the dry unit weight determined in accordance with USBR 5370.

3. Applicable Documents

3.1 *USBR Procedures*:
USBR 3900 Standard Definitions of Terms and Symbols Relating to Soil Mechanics
USBR 5300 Determining Moisture Content of Soil and Rock by the Oven Method
USBR 5370 Determining Unit Weight of Cylindrical Soil Specimens
USBR 5810 Performing Compressive Strength Testing of Soil-Cement Cylinders
USBR 5815 Preparing Soil-Cement Specimens for Durability Testing
USBR 5820 Performing Wet-Dry Durability Testing of Compacted Soil-Cement Mixtures
USBR 5835 Performing Record Coring and Cross Sectioning of Compacted Soil-Cement

3.2 *ASTM Standards*:
C 511 Specification for Moist Cabinets, Moist Rooms, and Water Storage Tanks Used in the Testing of Hydraulic Cements and Concretes
D 560 Specification for Freezing-and-Thawing Tests of Compacted Soil-Cement Mixtures

4. Summary of Method

4.1 Laboratory-compacted or field-cored soil-cement cylinders are subjected to 12 cycles of freezing and thawing. Each cycle consists of subjecting specimens to 24 hours in a freezing cabinet at a temperature of −10°F (−23°C) or colder and then 23 hours in a humidity room having a relative humidity of not less than 95 percent and a temperature of 73.4±3 °F (23.0±1.7 °C). The specimens are then wire-brushed. The mass of each soil-cement specimen is determined before and after each brushing to determine the mass loss. Mass losses from 12 cycles of freezing and thawing are accumulated. The total percent of mass loss is calculated for each specimen. The average total mass loss for all specimens is an indication of the durability of the compacted, cured soil-cement.

5. Significance and Use

5.1 Soil-cement freeze-thaw durability testing is performed to determine the accumulated soil-cement mass losses produced by repeated freezing and thawing.

5.2 The freeze-thaw durability test is one of a set of tests normally performed to evaluate the adequacy of compacted soil-cement. Other tests are wet-dry durability (USBR 5820) and compressive strength (USBR 5810).

5.3 Laboratory-compacted soil-cement specimens are tested to determine the cement content to be specified in a soil-cement mix design. Based on satisfactory

performance of existing soil-cement structures, Bureau criteria require accumulated freeze-thaw durability mass losses of 8.0 percent or less following 12 cycles of freezing and thawing. Unconfined compressive strength testing is conducted prior to durability testing to eliminate mix designs that do not meet compressive strength criteria. An economical mix design uses the minimum cement content that meets both strength and durability requirements.

5.4 Freeze-thaw durability tests are also conducted on field-cored specimens obtained during construction of the compacted soil-cement structure for construction control and record purposes to ensure that the soil-cement has met freeze-thaw durability requirements.

6. Terminology

6.1 Definitions are in accordance with USBR 3900.

6.2 Terms not included in USBR 3900 specific to this designation are:

6.2.1 *Cement Content.*–Amount of cement in a soil-cement mixture, specified as a percent of dry soil mass.

6.2.2 *Soil-Cement Moisture Content.*–Ratio of the mass of water to the total dry mass of a soil-cement mixture, expressed as a percent.

7. Apparatus

7.1 *General Apparatus*:

7.1.1 *Platform Scale.*–A typical platform scale used for this designation must be readable to 0.01 lbm and have a capacity of about 25 lbm. An electronic digital readout scale should not be used.

7.1.2 *Balance or Scale.*–A typical balance or scale used for this designation must be readable to 0.1 gram and have a capacity of about 3000 g.

7.1.3 *Moist Room or Water Bath.*–A moist room or water bath, capable of maintaining a uniform temperature of 73.4±3.0 °F (23.0±1.7 °C) and a relative humidity of not less than 95 percent, conforming to the requirements of ASTM C 511.

7.2 *Equipment Unique to This Procedure*:

7.2.1 *Freezing Chamber.*–A freezing chamber or cabinet capable of maintaining temperatures of –10 °F (–23 °C) or lower.

7.2.2 *Porous Carbon Stones.*–Porous carbon stones, coarse grade (PC-45), 4.0-inch (102-mm) diameter, 0.375-inch (9.5-mm) thick for placing between test specimens and carriers to allow test specimens to absorb water by capillary action during the thawing period.

7.2.3 *Wire Brush.*–A wire brush made of 2- by 1/16-inch (50- by 2-mm) flat No. 26 gauge (0.46-mm) wire bristles assembled in 50 groups of 10 bristles each and mounted to form 5 longitudinal rows and 10 transverse rows of bristles on a 7-1/2- by 2-1/2-inch (190- by 60-mm) hardwood block.

7.3 *Miscellaneous Equipment.*–Suitable pans for transportating test specimens, small brush with soft bristles for removing residue from specimens.

8. Reagents and Materials

8.1 Tapwater that is free of acids, alkalies, or oils and is suitable for drinking should be used for wetting the absorptive pads under the specimens.

9. Precautions

9.1 *Safety Precautions*:

9.1.1 This designation may involve hazardous materials, operations, and equipment.

9.1.2 Wear safety glasses when brushing specimens.

10. Sampling, Test Specimens, and Test Units

10.1 *Preparation of Laboratory-Compacted Test Specimens*:

10.1.1 Prepare three laboratory-compacted test specimens in accordance with USBR 5815.

10.1.2 At the end of the 7-day storage period in the moist room, dry one of the specimens to constant mass and determine the moisture content in accordance with USBR 5300. Record on the "Soil-Cement Durability Tests" form (fig. 1A or 1B). This moisture content is used to determine the dry mass for the other two test specimens.

10.1.3 At the end of the 7-day storage period in the moist room, determine and record the wet mass of the remaining two test specimens. Using the moisture content obtained in subparagraph 10.1.2, calculate the initial dry mass of the two test specimens. Record on the "Soil-Cement Durability Tests" form (fig. 1A or 1B).

10.2 *Preparation of Field-Cored Test Specimens*:

10.2.1 Obtain field-cored test specimens in accordance with USBR 5835.

10.2.2 Cut the 4.0-inch (102-mm) diameter core to obtain a test specimen 4.6±0.1-inch (117±3-mm) long. When using a 3.0-inch (76-mm) diameter core, cut to a length of 7.3±0.1 inch (185±3 mm). This results in approximately the same surface area as a standard 4.0-inch (102-mm) diameter by 4.6-inch (117-mm) long specimen.

10.2.3 From the remainder of the core, cut at least a 1-inch (25-mm) length for use in determining the moisture content of the field-cored specimen.

10.2.4 Dry the moisture specimen to constant mass and determine the moisture content in accordance with USBR 5300. Record on the "Moisture Content and Unit Weight Determination of Cylindrical Specimens" form (fig. 2A or 2B).

10.2.5 Determine the measured dry unit weight of the specimen in accordance with USBR 5370. Record on the "Moisture Content and Unit Weight Determination of Cylindrical Specimens" form (fig. 2A or 2B).

10.2.6 Transfer data obtained in subparagrahs 10.2.4 and 10.2.5 to the "Soil-Cement Durability Tests" form (fig. 1A or 1B).

10.2.7 Determine the wet mass of the test specimen. Using the moisture content obtained in subparagraph 10.2.4, calculate the initial dry mass of the test specimen.

Record on the "Soil-Cement Durability Tests" form (fig. 1A or 1B).

11. Calibration and Standardization

11.1 Verify that equipment is currently calibrated in accordance with the applicable calibration procedure. If the calibration is not current, perform the calibration before using the equipment for this procedure.

11.2 The technician who will brush the specimens must practice to ensure that 3 lbm (1.4 kg) is applied to the specimen during brushing. To measure 3 lbm, hold the specimen in a vertical position on the edge of a platform scale and zero the scale. Apply vertical downward brushing strokes to the specimen and note the force necessary to register approximately 3 lbm (fig. 3).

12. Conditioning

12.1 *Laboratory-Compacted Test Specimens.*–Cure the laboratory-compacted test specimens in accordance with USBR 5815.

12.2 *Field-Cored Test Specimens.*–Place cored specimens in the moist room for 24 hours prior to the first cycle of testing.

12.3 *Freezer Temperatures.*–Set and maintain the temperature of the freezing chamber to be used for the freezing portion of the freeze-thaw durability test at –10 °F (–23 °C) or lower.

13. Procedure

13.1 All data are to be recorded on the "Soil-Cement Durability Tests" form as shown on figure 1A or 1B. Figure 1A is an example for laboratory-compacted specimens and figure 1B is one for field-cored specimens.

13.2 Record the wet mass, moisture content, and initial dry mass as determined in subparagraph 10.1 for laboratory-compacted test specimens, and in subparagraph 10.2 for field-cored test specimens.

13.3 Place each test specimen on a porous stone. Use a suitable pan for transporting the test specimen and porous stone.

13.4 Place the test specimen in a freezing cabinet having a constant temperature of –10 °F (–23 °C) or lower for a period of 24 hours and remove.

13.5 Place the test specimen in the moist room or water bath having a temperature of 73.4±3.0 °F (23.0±1.7 °C) and a relative humidity of not less than 95 percent for 23 hours and remove. Ensure that free, potable water is made available to the porous stone under the specimen to permit the specimen to absorb water by capillary action during the thawing period. Determine and record the mass of the specimen to the nearest 0.1 gram.

13.6 Give each specimen two firm strokes on all areas with the wire brush. Hold the brush with the long axis of the brush parallel to the longitudinal axis of the specimen or parallel to the ends as required to cover all of the specimen. Apply these strokes to the full height and width of the specimen with a firm stroke corresponding to approximately 3 lbm. To measure 3 lbm, hold the specimen in a vertical position on the edge of a platform scale and zero the scale. Apply vertical brushing strokes to the specimen and note the force necessary to register approximately 3 lbm as shown on figure 3. Eighteen to twenty vertical brush strokes are required to cover the sides of the specimen twice, and four strokes are required on each end.

13.7 Using a soft bristle brush, carefully brush any residue from the specimen.

13.8 Determine the mass of the specimen and record to the nearest 0.1 gram.

13.9 After determining the mass of the specimen, turn the specimen end for end before replacing on the porous stone.

13.10 Calculate and record the mass loss for each cycle and the accumulated mass loss to the nearest 0.1 gram.

NOTE 1.–The mass loss per cycle and accumulated loss after each cycle are approximations. Because of the difficulty in retrieving and determining an accurate moisture content on the brushed particles, the loss per cycle is calculated on a wet mass basis.

13.11 The procedures described in subparagrpahs 13.4 through 13.10 constitute one cycle (48 hours) of freezing and thawing. Repeat this cycle 12 times. If it is not possible to run the cycle continuously because of weekends, holidays, or for other reasons, keep the specimens in the freezing cabinet during the layover period; note this on the form.

13.12 For laboratory-compacted specimens, complete the data that is required on the form from information obtained from the specimen preparation (subpar. 10.1).

13.13 For field-cored specimens, complete the data that is required on the form from information obtained from the specimen preparation (subpar. 10.2).

13.14 Calculate and record the percent mass loss to the nearest 0.01 percent.

14. Calculations

14.1 Calculate the mass loss per cycle.

$$A = B - C \qquad (1)$$

where:

A = mass loss per cycle, g
B = mass before brushing, g
C = mass after brushing, g

14.2 Calculate the mass loss of the test specimen as a percent (percent loss) of the initial oven-dry mass using the equation:

$$\text{Percent loss, } \% = 100\left(\frac{m_t}{m_{id}}\right) \qquad (2)$$

where:

m_t = total accumulated mass loss, g
m_{id} = initial dry mass of specimen, g
100 = convert to percent, %

7-1802 (11-85)
Bureau of Reclamation

SOIL-CEMENT DURABILITY TESTS

Designation USBR 5820- __ __ (wet-dry) ☐ Designation USBR 5825- 8 9 (freeze-thaw) ☒

PROJECT	FEATURE
Example	Example
LOCATION	DEPTH/ELEVATION
AP-25	4.5 - 6.0 ft
SAMPLE NO.	SPECIMENS NO.
5825T	1, 2, 3

TESTED BY | COMPUTED BY | DATE | CHECKED BY | DATE

Molded specimens from USBR 5815- 8 9 :

Date Formed 11 - 23 - 89 Cement Content 12.0 %

γ_{max} = 125.0 ☒ lbf/ft³ ☐ kN/m³, w_o = ____ %

	SPEC 1	SPEC 2	SPEC 3
Moisture Content			
D-Value			

Cored specimen from USBR 5835- __ __ :

Date Cored ____ Age ____ days

Cement Content ____ %

Average Diameter ____ ☐ in ☐ mm Length ____ ☐ in ☐ mm

Dry unit weight ____ ☐ lbf/ft³ ☐ kN/m³

		Specimen No. 1				Specimen No. 2				
Cycle No.	Date 19 89	Mass before brushing (g)	Mass after brushing (g)	Mass loss per cycle (g)	Accumulated mass loss (g)	Mass before brushing (g)	Mass after brushing (g)	Mass loss per cycle (g)	Accumulated mass loss (g)	Remarks
1	11-30	1964.2	1959.6	4.6	4.6	1970.2	1966.1	4.1	4.1	
2	12-3	1960.2	1952.2	8.0	12.6	1966.3	1960.2	6.1	10.2	*
3	12-5	1953.4	1947.8	5.6	18.2	1961.0	1955.0	6.0	16.2	
4	12-7	1947.8	1940.2	7.6	25.8	1953.8	1948.0	5.8	22.0	
5	12-10	1939.0	1932.8	6.2	32.0	1947.2	1942.2	5.0	27.0	*
6	12-12	1933.8	1928.3	5.5	37.5	1944.0	1939.4	4.6	31.6	
7	12-14	1929.4	1923.2	6.2	43.7	1939.5	1934.2	5.3	36.9	
8	12-17	1922.0	1917.3	4.7	48.4	1932.9	1929.0	3.9	40.8	*
9	12-19	1919.4	1914.2	5.2	53.6	1929.2	1924.4	4.8	45.6	
10	12-21	1914.2	1904.8	9.4	63.0	1923.8	1917.0	6.8	52.4	
11	12-24	1904.5	1899.1	5.4	68.4	1916.9	1913.0	3.9	56.3	*
12	12-26	1899.8	1894.2	5.6	74.0	1911.7	1906.4	5.3	61.6	

	Specimen No. 1	Specimen No. 2	
(1) Wet mass of specimen	1957.8 g	1962.8 g	
(2) Moisture content *	7.0 %	7.0 %	
(3) Initial dry mass of specimen	1829.7 g	1834.4 g	$\frac{(1)}{1.0 + \frac{(2)}{100}}$
(4) Total accumulated mass loss	74.0 g	61.6 g	
(5) Percent loss	4.04 %	3.36 %	$\frac{(4)}{(3)} \times 100$

* Specimens kept in freezing cabinet during layover.

* Specimen No. 3 used for moisture content determination only. See back for calculations.

Figure 1A. - Soil-cement durability test — laboratory-compacted specimen example.

7-1802 (11-85)
Bureau of Reclamation

SOIL-CEMENT DURABILITY TESTS

Designation USBR 5820- __ __ (wet-dry) ☐ Designation USBR 5825- 8 9 (freeze-thaw) ☒

PROJECT	FEATURE
Example	Example
LOCATION	DEPTH/ELEVATION
APC-18	4.0 - 5.6 ft.
SAMPLE NO.	SPECIMENS NO.
5825T	14

TESTED BY	COMPUTED BY	DATE	CHECKED BY	DATE

Molded specimens from USBR 5815- __ __ :

Date Formed _____ Cement Content _____ %

γ_{max} = _____ ☐ lbf/ft³ ☐ kN/m³, w_o = _____ %

	SPEC 1	SPEC 2	SPEC 3
Moisture Content			
D-Value			

Cored specimen from USBR 5835- 8 9 :

Date Cored 11-23-89 Age 28 days

Cement Content 12.0 %

Average Diameter 3.87 ☒ in ☐ mm Length 4.57 ☒ in ☐ mm

Dry unit weight 134.2 ☒ lbf/ft³ ☐ kN/m³

		Specimen No. 14				Specimen No. ____				
Cycle No.	Date 19 89	Mass before brushing (g)	Mass after brushing (g)	Mass loss per cycle (g)	Accumulated mass loss (g)	Mass before brushing (g)	Mass after brushing (g)	Mass loss per cycle (g)	Accumulated mass loss (g)	Remarks
1	11-30	1807.1	1805.2	1.9	1.9					
2	12-3	1820.0	1819.1	0.9	2.8					*
3	12-5	1826.5	1825.5	1.0	3.8					
4	12-7	1829.9	1827.7	2.2	6.0					
5	12-10	1831.7	1830.5	1.2	7.2					*
6	12-12	1833.6	1832.6	1.0	8.2					
7	12-14	1835.0	1834.2	0.8	9.0					
8	12-17	1837.6	1836.9	0.7	9.7					*
9	12-19	1839.0	1837.9	1.1	10.8					
10	12-21	1840.0	1839.1	0.9	11.7					
11	12-24	1841.7	1840.0	1.7	13.4					*
12	12-26	1840.5	1838.9	1.6	15.0					

	Specimen No. 14	Specimen No. ____	
(1) Wet mass of specimen	1799.6 g	_____ g	
(2) Moisture content *	1.8 %	_____ %	
(3) Initial dry mass of specimen	1767.8 g	_____ g	$\frac{(1)}{1.0 + \frac{(2)}{100}}$
(4) Total accumulated mass loss	15.0 g	_____ g	
(5) Percent loss	0.85 %	_____ %	$\frac{(4)}{(3)} \times 100$

* Specimen kept in freezing cabinet during layover.

* Specimen No. 14 used for moisture content determination only. See back for calculations.

Figure 1B. - Soil-cement durability test — field-cored specimen example.

7-2338 (12-86) Bureau of Reclamation

MOISTURE CONTENT AND UNIT WEIGHT DETERMINATION OF CYLINDRICAL SPECIMENS

Designation USBR 5370 - 89

SAMPLE NO.	PROJECT	FEATURE
5825T	Example	Example

SPECIMEN NO.	HOLE NO.	DEPTH
14	APC-18	4.0 – 5.6 ft.

TESTED BY	DATE	COMPUTED BY	DATE	CHECKED BY	DATE

	Soil specimen diameter	a	3.86	(in)
		b	3.93	(in)
		c	3.82	(in)
(1)	Average specimen diameter		3.87	(in)
(2)	Soil specimen area = 0.7854 x (1)^2		11.76	(in^2)
	Length of soil specimen	a	4.57	(in)
		b	4.53	(in)
		c	4.57	(in)
(3)	Average length of soil specimen		4.56	(in)
(4)	Soil specimen volume = (2) x (3)		53.63	(in^3)
(5)	Wet mass of soil specimen		4.24	(lbm)
(6)	Wet density = (5) x 1728/(4)		136.6	(lbm/ft^3)
(7)	Wet unit weight*		136.6	(lbf/ft^3)
(20)	Dry unit weight = (7)/[1 + (19)/100]		134.2	(lbf/ft^3)

	Moisture content		Top		Bottom	
			+ No. 4	– No. 4	+ No. 4	– No. 4
	Dish No.			218		
	Mass of dish + wet soil	(g)		282.1		
	Mass of dish + dry soil	(g)		279.2		
	Mass of dish	(g)		121.8		
	Mass of water	(g)		2.9		
	Mass of dry soil	(g)		157.4		
(8)	Moisture content + No. 4 **	(%)				
(9)	Moisture content – No. 4 **	(%)		1.8		
	Complete the following only if + No. 4 is present:					
(10)	Total wet mass of moisture specimen	(g)				
(11)	Mass of wet + No. 4	(g)				
(12)	Mass of wet – No. 4	(g)				
(13)	Mass of dry + No. 4	(g)				
(14)	Mass of dry – No. 4	(g)				
(15)	Mass of dry moisture specimen (+ No. 4) + (– No. 4)	(g)				
(16)	Percentage of particle size					
(17)	Percentage of particle size					
(18)	Moisture content of total specimen ***	(%)				
(19)	Average moisture content	(%)		1.8		

Remarks: Cut 4.57 inch long specimen from 6.02 inch long piece of core representing a compaction lift: Specimen used freeze thaw durability testing.

Auxiliary Test:

USBR 5300 - 89

* Implies 1lbm = 1lbf

** If + No. 4 is not porous, a moisture content (% absorption) of 1.5 percent may be assumed for + No. 4 material only.

*** $(18) = \frac{(16) \times (8)}{100} + \frac{(17) \times (9)}{100}$

Constants: 0.7854 = $\pi/4$

1728 = Convert in^3 to ft^3

GPO 850 - 056

Figure 2A. – Moisture content and unit weight determination of cylindrical specimens (in-lb example).

7M-2338 (5-86)
Bureau of Reclamation

MOISTURE CONTENT AND UNIT WEIGHT DETERMINATION OF CYLINDRICAL SPECIMENS

Designation USBR 5370 - 89

SAMPLE NO.	PROJECT	FEATURE
5825T	Example	Example

SPECIMEN NO.	HOLE NO.	DEPTH
14	APC-18	1.2 - 1.7 m

TESTED BY	DATE	COMPUTED BY	DATE	CHECKED BY

	Soil specimen diameter	a		98.1	(mm)
		b		99.7	(mm)
		c		97.0	(mm)
(1)	Average soil specimen diameter			98.3	(mm)
(2)	Soil specimen diameter in centimeters		= (1)/10	9.83	(cm)
(3)	Soil specimen area		= 0.7854 x (2)^2	75.9	(cm^2)
	Length of soil specimen	a		116.0	(mm)
		b		115.1	(mm)
		c		115.9	(mm)
(4)	Average length of soil specimen			115.7	(mm)
(5)	Average length of soil specimen		= (4)/10	11.57	(cm)
(6)	Soil specimen volume		= (3) x (5)	878.2	(cm^3)
(7)	Wet mass of soil specimen			1950	(g)
(20)	Wet density		= (7) x 1000/(6)	2220	(kg/m^3)
(21)	Wet unit weight		= (20) x 0.009807	21.77	(kN/m^3)
(22)	Dry unit weight		= (21)/[1 + (19)/100]	21.39	(kN/m^3)

	Moisture content		Top		Bottom	
			+ No. 4	- No. 4	+ No. 4	- No. 4
	Dish No.			28		
	Mass of dish + wet soil	(g)		282.1		
	Mass of dish + dry soil	(g)		279.2		
	Mass of dish	(g)		121.8		
	Mass of water	(g)		2.9		
	Mass of dry soil	(g)		157.4		
(8)	Moisture content + No. 4*	(%)				
(9)	Moisture content – No. 4*	(%)		1.8		
	Complete the following only if + No. 4 is present:					
(10)	Total wet mass of moisture specimen	(g)				
(11)	Mass of wet + No. 4	(g)				
(12)	Mass of wet – No. 4	(g)				
(13)	Mass of dry + No. 4	(g)				
(14)	Mass of dry – No. 4	(g)				
(15)	Mass of dry moisture specimen (+ No. 4) + (– No. 4)	(g)				
(16)	Percentage of particle size					
(17)	Percentage of particle size					
(18)	Moisture content of total specimen **	(%)				
(19)	Average moisture content	(%)	1.8			

Remarks: Cut 115.7mm long specimen from 153.0 mm long piece of core representing a compaction lift. Specimen used for freeze-thaw durability testing.

Auxiliary Test:
USBR 5300 - 89

* If + No. 4 is not porous, a moisture content (% absorption) of 1.5 percent may be assumed for + No. 4 material only.

** $18 = \frac{(16) \times (8)}{100} + \frac{(17) \times (9)}{100}$

Constants: 0.7854 = $\pi/4$

1000 = Convert g/cm^3 to kg/m^3

0.009807 = Convert kg to kN

GPO 851-058

Figure 2B. – Moisture content and unit weight determination of cylindrical specimens (SI example).

(a) Brush strokes applied to a soil-cement durability test specimen registering a 3 lbm on platform scale.

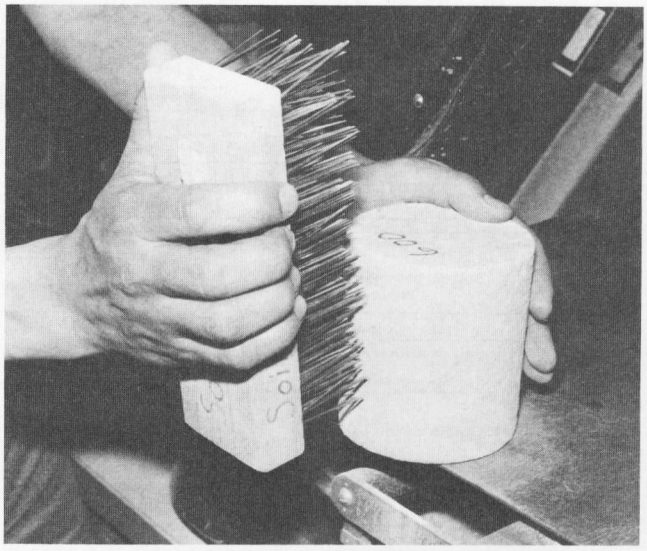

(b) Closeup view of downward vertical brushing strokes applied to the sides of a soil-cement durability test specimen.

(c) Closeup view of brushing strokes applied to the end of a soil-cement durability test specimen.

Figure 3. – Brushing strokes require practice to apply necessary force.

14.2.1 An example calculation follows for determining the percent of mass loss from a test specimen due to freeze-thaw durability testing.

m_t = total accmulated mass loss = 74.0 g
m_{id} = initial dry mass of specimen = 1829.7 g

$$\text{Percent loss} = 100 \left(\frac{74.0 \text{ g}}{1829.7 \text{ g}} \right) = 4.04\%$$

15. Report

15.1 The report is to consist of the following completed and checked forms:

"Soil-Cement Durability Tests" (fig. 1A or 1B).

"Moisture Content and Unit Weight Determination of Cylindrical Specimens" (fig. 2A or 2B).

15.2 All calculations are to show a checkmark.

UNITED STATES DEPARTMENT OF THE INTERIOR
BUREAU OF RECLAMATION

USBR 5830-89

PROCEDURE FOR

PERFORMING CONSTRUCTION CONTROL OF SOIL-CEMENT

This procedure is under the jurisdiction of the Geotechnical Services Branch, code D-3760, Research and Laboratory Services Division, Denver Office, Denver, Colorado. The procedure is issued under the fixed designation USBR 5830. The number immediately following the designation indicates the year of acceptance or the year of last revision. Corresponding forms in SI units are included. The SI forms have the letter M following the first digit in the form number.

1. Scope

1.1 This designation outlines procedures for testing soil-cement during construction activities for construction control and record purposes. The testing includes gradation analysis and specific gravity of soil, rapid method of construction control of soil-cement as compacted, in-place unit weight determination, compressive strength, chemical titration for cement content determination, and record coring.

1.2 All tests are in accordance with USBR procedures with exceptions and additions as listed in this procedure.

2. Applicable Documents

2.1 *USBR Procedures*:

USBR 3900 Standard Definitions of Terms and Symbols Relating to Soil Mechanics
USBR 5205 Preparing Soil Samples by Splitting or Quartering
USBR 5300 Determining Moisture Content of Soil and Rock by the Oven Method
USBR 5320 Determining Specific Gravity of Soils
USBR 5325 Performing Gradation Analysis of Gravel Size Fraction of Soils
USBR 5806 Preparing Soil-Cement Specimens for Compressive Strength Testing for Construction Control
USBR 5810 Performing Compressive Strength Testing of Soil-Cement Cylinders
USBR 5835 Performing Record Coring and Cross Sectioning of Compacted Soil-Cement
USBR 7205 Determining Unit Weight of Soils In-Place by the Sand Cone Method
USBR 7206 Determining Unit Weight of Soils In-Place by the Rubber Balloon Method
USBR 7240 Performing Rapid Method of Construction Control
USBR 7255 Determining the Percent Compaction of Earthwork for Construction Control

2.2 *ASTM Standard*:

E 11 Specification for Wire-Cloth Sieves for Testing Purposes

2.3 *USBR Document*.–Field Method for Determination of Cement Content in Soil-Cement Mixtures [1];[1]

3. Summary of Method

3.1 The soil used for soil-cement is sampled and gradation analysis and specific gravity tests are performed. Freshly mixed soil-cement is sampled and tested to determine clay ball content (subpar. 10.3.2) and the laboratory maximum dry unit weight and optimum moisture content. The cement content of fresh soil-cement is determined by chemical titration tests. Compacted soil-cement is tested to determine in-place dry unit weight which is compared to laboratory maximum dry unit weight to determine the percent compaction. Test cylinders are molded from fresh soil-cement, cured in a high-humidity environment for designated periods, and tested for compressive strength. Hardened soil-cement is cored at designated time intervals after compaction during construction and the cores are tested for durability and compressive strength. Durability test specimens are shipped to the Bureau's Denver Office, Geotechnical Services Branch, for laboratory testing. Cross sections of the compacted soil-cement are determined at designated locations for future reference.

4. Significance and Use

4.1 The tests discussed in this procedure are used to determine the adequacy of soil-cement placed in Bureau structures. Thorough inspection and quality control testing are required during all stages of construction to ensure that design criteria are obtained under field conditions. Results of early inspections and laboratory testing are used to establish placement conditions, procedures to be used for the remaining construction, and as a reference for the design and construction of future projects.

4.1.1 Gradation analysis of the soil is performed to determine if it meets specifications requirements. The

[1] Number in brackets refers to the reference.

percentage of fines is particularly important as either too many or too few fines can significantly affect compressive strength of the soil-cement mixture.

4.1.2 The soil-cement mixture is tested for clay ball content because a high percentage of clay balls ultimately can reduce durability of the soil-cement structure. During mixing, clay balls are coated with cement; however, the cement does not mix into the clay balls but creates spots in the soil-cement structure that wash out when exposed to wave action.

4.1.3 Compacted soil-cement is tested for percent compaction because compaction is related directly to the final compressive strength and durability of the structure. A higher percentage of compaction at a given cement content generally yields a higher compressive strength and a more durable product.

4.1.4 Soil-cement is tested for compressive strength at the fill wet unit weight to determine if design compressive strength requirements are achieved. Minimum design compressive strengths have been established based on performance of earlier Bureau soil-cement structures. In conjunction with laboratory compacted specimens, core samples of hardened soil-cement from the structure are obtained and tested for compressive strength.

4.1.5 The soil-cement mixture is tested for cement content by chemical titration tests to confirm batch plant mass cement content determinations.

4.1.6 The times are observed and recorded when (1) plant mixing is completed, (2) laboratory compaction is completed, (3) field compaction is completed, and (4) the field unit weight test is begun. Usually the maximum time allowed for hauling and spreading is specified as 30 minutes. Compaction usually is required to be completed within 60 minutes after spreading with no more than 30 minutes between operations. These restrictions are necessary for the soil-cement to be compacted before significant hydration of cement.

4.2 This procedure outlines sampling methods and routine soil testing procedures involved with soil-cement placement.

5. Terminology

5.1 Definitions are in accordance with USBR 3900.

5.2 Terms not included in USBR 3900 specific to this designation are:

5.2.1 *Cement Content.*–Amount of cement in a soil-cement mixture, specified as a percentage of dry soil mass.

5.2.2 *Clay Ball.*–A ball of fines (clay and silt) and sand which does not break down during ordinary processing.

5.2.3 *Soil-Cement Moisture Content.*–Ratio of the mass of water to the total dry mass of a soil-cement mixture, expressed as a percentage.

5.2.4 *Chemical Titration Test for Cement Content.*–Volumetric determination of the total calcium by means of EDTA (ethylenediamine tetraacetic acid) titration.

6. Apparatus

6.1 *General Apparatus*:

6.1.1 *Containers.*–Moisture-proof containers for transporting soil and fresh soil-cement.

6.1.2 *Shovel.*–Shovel for obtaining soil and fresh soil-cement.

6.1.3 *Sieve.*–U.S.A. Standard Series No. 4 (4.75-mm) sieve conforming to the requirements of ASTM E 11.

6.1.4 *Balance or Scale.*–A typical balance or scale used for this designation must be readable to 0.01 lbm (5 g) and have a capacity of about 50 lbm (23 kg).

7. Precautions

7.1 *Safety Precautions*:

7.1.1 This designation may involve hazardous materials, operations, and equipment.

7.1.2 Exercise care to protect hands from drying and abrasive properties of cement.

7.2 *Technical Precautions.*–To minimize the effects of cement hydration and evaporation, perform all tests expeditiously and continuously to completion.

8. Calibration and Standardization

8.1 Verify that equipment is currently calibrated in accordance with the applicable calibration procedure. If the calibration is not current, perform the calibration before using the equipment for this procedure.

9. Conditioning

9.1 Protect the soil and fresh soil-cement samples from moisture loss by transporting to the laboratory in moisture-proof containers.

9.2 Retain the samples in moisture-proof containers in the laboratory prior to testing.

10. Procedure

10.1 All the compressive strength data are to be recorded on "Soil-Cement Test Cylinder Break Card" (fig. 1A or 1B).

Summarize data on forms: "Summary of Compacted Soil-Cement Tests" (fig. 2A or 2B), and "Soil-Cement Cores—Compressive Strength Summary" (fig. 3A or 3B) for monthly progress reports.

Figures 1A, 2A, and 3A are in inch-pound units; and figures 1B, 2B, and 3B are in SI units.

10.2 *Soil*:

10.2.1 Before adding cement, sample the soil after processing, and prepare the sample in accordance with USBR 5205. After sampling, record the time when plant mixing of the selected load of soil-cement was completed.

10.2.2 Test the soil for gradation (USBR 5325) and specific gravity (USBR 5320).

10.2.3 Sample and test the soil once for each 500 yd^3 (400 m^3) of soil-cement placed, or a minimum of once per shift, or when the properties of the soil visibly change. If specification requirements are consistently met, testing may be limited to once per shift.

10.3 *Soil-Cement*:

10.3.1 Sample and test the fresh soil-cement mixture once for each 500 yd^3 (400 m^3) placed, or a minimum of once per shift, or when the properties of the soil-cement visibly change. The sample is to be taken at the placement site whenever possible; however, when not practical, the sample may be taken at the batch plant. Approximately 50 lbm (23 kg) is required for testing.

10.3.1.1 The sampling process must be coordinated with batchplant and placement inspectors. Obtain the soil-cement sample from the same load that was being mixed at the time the soil sample was taken.

10.3.1.2 Sample from three locations within the spreader box after the load is dumped or take a shovel-wide section across the lift after the soil-cement is spread.

10.3.1.3 Mark the location at which the loose soil-cement sample was taken so the in-place wet unit weight can be determined for the same load of soil-cement after compaction.

10.3.2 Test the fresh soil-cement for clay ball content.

10.3.2.1 Split the sample obtained in accordance with subparagraph 10.3.1 and pass one-half over a No. 4 (4.75-mm) sieve exercising care not to break down the clay balls. Retain the other one-half of soil-cement sample in a moisture-proof container.

10.3.2.2 Remove the clay balls by hand from material retained on the No. 4 (4.75-mm) sieve. Determine the wet mass of the clay balls. Discard any remaining plus No. 4 material.

10.3.2.3 Determine the wet mass of the minus No. 4 (4.75-mm) material.

10.3.2.4 Divide the wet mass of the clay balls by the wet mass of the minus No. 4 (4.75-mm) material to determine the percent of material in clay balls in the sample and record on figure 2A or 2B.

NOTE 1.–The percentage of material in clay balls is an approximation based on wet masses. If it is 10 percent or more, notify concerned personnel.

10.3.2.5 Pass the clay balls through the No. 4 sieve and thoroughly mix with the previously sieved material in preparation for further testing.

10.3.3 Perform rapid method of construction control (USBR 7240) testing on the sample prepared in accordance with subparagraph 10.3.2.5. Perform compaction testing in the laboratory at the same time the sampled load is being compacted in the field to minimize time effect disparities on compaction properties of soil-cement caused by evaporation and cement hydration. Note the time the laboratory compaction was completed and record on figure 2A or 2B.

10.3.4 Determine the in-place wet unit weight of the compacted soil-cement at the location stated in subparagraph 10.3.1.3 in accordance with USBR 7205 or 7206 as soon as field compaction is completed. Note the time the field unit weight test was started and record on figure 2A or 2B.

10.3.4.1 Before making the volume determination, measure and record the depth of the compacted lift to the nearest 1/4 inch (5 mm).

10.3.4.2 Upon completion of unit weight testing, backfill the test hole with fresh soil-cement and compact.

10.3.5 Using the unscreened portion of the split sample (subpar. 10.3.2.1) prepare specimens for compressive strength testing in accordance with USBR 5806. The specimens are to be compacted to the in-place wet unit weight as determined in subparagraph 10.3.4. Specimens should be compacted as soon as possible after the field wet unit weight has been determined.

10.3.6 Following the designated curing period, test the specimens for compressive strength in accordance with USBR 5810.

10.3.7 Determine cement content of the sample by means of the chemical titration test in accordance with the procedure referenced in subparagraph 2.3.

10.3.8 Obtain from the batchplant inspector the volume of material represented by the test and the percent cement by dry mass and record on figure 2A or 2B.

10.3.9 Obtain from the placement inspector the source of material, the method of compaction, and the time field compaction was completed and record on figure 2A or 2B.

10.3.10 Obtain record cores from the soil-cement structure in accordance with USBR 5835.

11. Calculations

11.1 Calculate the percentage of material in clay balls:

$$CB = 100\left(\frac{A}{B}\right)$$

where:

CB = clay ball content, %
A = wet mass of clay balls, lbm or kg
B = wet mass of minus No. 4 (4.75-mm) soil-cement, lbm or kg

12. Report

12.1 The report is to consist of the following completed and checked forms:

"Soil-Cement Test Cylinder Break Card" (fig. 1A or 1B)
"Summary of Compacted Soil-Cement Tests" (fig. 2A or 2B)
"Soil-Cement Cores—Compressive Strength Summary" (fig. 3A or 3B)

12.2 All calculations are to show a checkmark.

13. Reference

[1] Tramutt, Paul R., *Field Method for Determination of Cement Content in Soil-Cement Mixtures*, Bureau of Reclamation Report No. ChE-77 Denver, Colorado, December, 1967.

7-2149 (6-85)
Bureau of Reclamation

SOIL–CEMENT
TEST CYLINDER BREAK CARD

Designation USBR 5806- 8 9 Auxiliary Tests: USBR 7205- 8 9, USBR 7206- __ __

Feature: Example Structure: Slope Protection

Test No. or Location A-1 Sta.126 Date Placed: 7-1-89 Shift: Day Time: 12:55 p.m.

Mold Volume: 0.0200 ft^3 Fill Unit Weight: 136.0 lbf/ft^3

D-Value: 99.0 % Cement Content: 11.9 % Loading Rate: 30 $lbf/in^2/S$

Specimen number	Age (days)	Break Date	Average Length(L) (in)	Average Dia (D) (in)	L/D	Load at Failure (lbf)	Area (in^2) $A = \frac{\pi D^2}{4}$	Compressive Strength (lbf/in^2) $q_u = \frac{Load}{A}$	Prepared By	Tested By	Checked By
97	3	7-4-89	5.67	2.83	2.0	3800	6.29	600	VDG	VDG	AC
98	7	7-8-89	5.67	2.83	2.0	4700	6.29	750	VDG	VDG	AC
99	7	7-8-89	5.67	2.83	2.0	4800	6.29	760	VDG	VDG	AC
100	28	7-29-89	5.67	2.83	2.0	6250	6.29	990	VDG	VDG	AC
101	28	7-29-89	5.67	2.83	2.0	6350	6.29	1010	VDG	VDG	AC
102	90	9-29-89	5.67	2.83	2.0	7050	6.29	1120	VDG	VDG	AC

Remarks on Reverse Side

Figure 1A. – Soil-cement test cylinder break card (in-lb example).

7m-2149 (6-85)
Bureau of Reclamation

SOIL–CEMENT
TEST CYLINDER BREAK CARD

Designation USBR 5806- 8 9 Auxiliary Tests: USBR 7205- 8 9, USBR 7206- __ __

Feature: Example Structure: Slope Protection

Test No. or Location: A-1 Sta.126 Date Placed: 7-1-89 Shift: Day Time: 12:55 p.m.

Mold Volume: 5.63×10^{-4} m^3 Fill Unit Weight: 20.0 kN/m^3
(to convert from cm^3 to m^3, divide by 10^6)

D-Value: 99.0 % Cement Content: 11.9 % Loading Rate: 0.20 MPa/s

Specimen number	Age (days)	Break Date	Average Length(L) (mm)	Average Dia (D) (mm)	L/D	Load at Failure (N)	Area(mm^2) $A = \frac{\pi D^2}{4}$	Compressive Strength(kPa) $(q_u) = \frac{Load}{A} \times 10^3$	Prepared By	Tested By	Checked By
97	3	7-4-89	144	72.0	2.0	16000	4071.5	3930	VDG	VDG	CED
98	7	7-8-89	144	72.0	2.0	21600	4071.5	5310	VDG	VDG	RNM
99	7	7-8-89	144	72.0	2.0	21600	4071.5	5310	VDG	VDG	RNM
100	28	7-29-89	144	72.0	2.0	30000	4071.5	7370	VDG	VDG	CED
101	28	7-29-89	144	72.0	2.0	30600	4071.5	7520	VDG	VDG	CED
102	90	9-29-89	144	72.0	2.0	36500	4071.5	8960	VDG	VDG	RNM

Remarks on Reverse Side

Figure 1B. – Soil-cement test cylinder break card (SI example).

7-1737 (11-85)
Bureau of Reclamation

SUMMARY OF COMPACTED SOIL-CEMENT TESTS

Designation USBR 5830 - 8 9

PROJECT Example

FEATURE Example

SPECIFICATIONS 7M-2295

DATE OF REPORT: MONTH OCT YEAR 1989

PERIOD OF REPORT: FROM 9/28/89 TO 10/5/89

90 -DAY COMPRESSIVE STRENGTH UPDATE

TOTAL VOLUME OF SOIL-CEMENT PLACED THIS PERIOD:

FACING 4,226 (Yd^3)

OTHER — (Yd^3)

SHEET 1 OF 1

TEST IDENTIFICATION					LOCATION OF TEST (NOTE 1)	VOLUME REPRESENTED BY FILL UNIT WEIGHT TEST (yd^3)	SOURCE OF MATERIAL (BORROW AREA, REQUIRED EXCAVATION, ETC.)	SOIL CLASSIFICATION SYMBOL	MINUS NO. 200 (%)	CLAYBALL CONTENT (%)	LIFT THICKNESS (in)	METHOD OF COMPACTION (NOTE 2) NO. OF PASSES ROLLER TYPE	TIME (NOTE 3)				DRY UNIT WEIGHT AND MOISTURE CONTENT								CEMENT CONTENT (%)		COMPRESSIVE STRENGTH (lbf/in^2)			
																	FILL DRY UNIT WEIGHT				FILL MOISTURE CONTENT								
MONTH	DAY	SHIFT	NUMBER	STATUS*	STATION OFFSET COORDINATES, ELEVATION (ft)								PLANT MIXING COMPLETED	LABORATORY COMPACTION COMPLETED	FILL COMPACTION COMPLETED	FILL UNIT WEIGHT TEST STARTED	TOTAL SAMPLE (lbf/ft^3)	MINUS NO. 4 (lbf/ft^3)	LABORATORY MAXIMUM DRY UNIT WEIGHT (lbf/ft^3)	RATIO OF FILL DRY UNIT WEIGHT TO LAB MAX DRY UNIT WEIGHT (%)	TOTAL SAMPLE (%)	MINUS NO. 4 (w_f) (%)	LABORATORY OPTIMUM (w_o) (%)	VARIATION FROM OPTIMUM ($w_o - w_f$) (%)	BY MASS FROM BATCH PLANT	BY MASS FROM CHEM. TEST	3-DAY	7-DAY	28-DAY	90-DAY
7	1	A	1	A	126+53 223.6	481	BORROW A	SP-SM	9	3.2	6.2	6SR 4RT	12:05	12:50	12:50	12:55	123.6	123.6	124.8	99.0	10.6	10.6	10.3	-0.3	11.9	11.7	600	750	990	1120
																												760	1010	
7	2	A	1	A	87+76 231.3	340	" C	SM	13	5.7	6.0	6SR 6RT	9:35	9:55	9:55	9:55	123.9	123.9	126.6	97.9	8.0	8.0	9.3	1.3	11.9	12.0	490	650	900	1090
																												610	920	
7	2	B	1	R	83+66 233.3	495	" C	SM	19	4.8	6.5	6SR 6RT	13:37	14:00	14:00	14:00	116.4	116.4	129.3	90.0	10.2	10.2	9.6	-0.6	11.6	11.6				
7	2	B	1	A	83+66 233.3	495	" C	SM	19	4.8	6.5	6SR 9RT	13:37	14:00	14:15	14:15	125.2	125.2	129.3	96.8	10.2	10.2	9.6	-0.6	11.6	11.6	490	610	890	1020
																												650	910	
7	3	A	1	A	85+30 240.2	489	" C	SP-SM	5	1.3	6.3	7SR 6RT	11:00	11:30	11:35	11:37	129.8	126.5	131.9	95.9	8.2	8.8	8.8	0.0	11.7	11.9	520	650	900	1120
																												690	850	
7	3	A	2	A	104+33 209.7	502	" C	SP-SM	6	2.0	6.2	6SR 8RT	14:17	14:50	14:57	15:00	124.7	124.7	126.6	98.5	10.8	10.8	9.8	-1.0	12.5	12.8	720	900	1120	1540
																												910	1070	
7	4	A	1	A	105+81 213.6	390	" C	SP-SM	6	1.2	5.9	6SR 7RT	10:00	10:30	11:00	11:00	124.3	124.3	127.8	97.3	9.9	9.9	10.2	0.3	11.6	11.4	530	750	980	1200
																												780	940	
7	4	B	1	A	102+53 219.0	301	" C	SM	13	3.8	6.0	6SR 6RT	13:50	14:15	14:23	14:25	125.3	125.3	127.3	98.4	10.1	10.1	8.6	-1.5	10.8	10.6	440	610	770	980
																												630	810	
7	5	A	1	A	107+45 221.9	402	" C	SM	19	3.5	5.9	6SR 6RT	10:25	11:00	11:00	11:00	124.7	124.7	126.9	98.3	10.6	10.6	9.5	-1.1	11.2	11.1	590	650	920	1140
																												670	920	
7	5	B	1	W	106+96 226.9	120	" C	SM	35																					
7	5	B	2	A	106+99 226.9	120	" D	SM	12	3.9	6.3	6SR 6RT	18:50	19:15	19:23	19:27	129.8	129.8	128.6	100.9	8.4	8.4	8.8	0.4	11.8	11.7	540	690	850	1290
																												720	1090	
7	6	A	1	A	86+50 229.0	502	" D	SM	12	2.1	6.0	6SR 6RT	10:00	10:35	10:40	10:40	130.8	130.8	130.9	99.9	10.5	10.5	9.2	-1.3	10.9	11.1	480	620	890	1000
																												600	880	
7	6	B	1	A	90+70 231.9	304	" D	SP-SM	7	1.0	6.0	6SR 6RT	14:12	14:45	14:50	14:50	131.9	128.4	132.9	96.6	7.8	8.1	8.4	0.3	11.2	11.6	520	670	880	1210
																												680	880	

*A = Accepted
R = Rejected
W = Wasted

NOTE 1 MIMIMUM NUMBER OF FILL UNIT WEIGHT TESTS REQUIRED
1 Test for every 500 yd^3 or 2 tests per shift, whichever is greater.

NOTE 2. SR–Sheepsfoot
RT–Rubber Tired
DR–Drum
VR–Vibratory Roller

NOTE 3: Time of day completed. Use 24-hour clock.

Figure 2A. – Summary of compacted soil-cement tests (in-lb example).

7M-1737 (11-85)
Bureau of Reclamation

SUMMARY OF COMPACTED SOIL-CEMENT TESTS

Designation USBR 5830 - 89

PROJECT Example

FEATURE Example

SPECIFICATIONS 7M-2295

DATE OF REPORT: MONTH OCT. YEAR 1989

PERIOD OF REPORT: FROM 9/28/89 TO 10/5/89

90 -DAY COMPRESSIVE STRENGTH UPDATE

TOTAL VOLUME OF SOIL-CEMENT PLACED THIS PERIOD:

FACING 3,231 (m^3)

OTHER ——— (m^3)

SHEET 1 OF 1

TEST IDENTIFICATION					LOCATION OF TEST (NOTE 1)	VOLUME REPRESENTED BY FILL UNIT WEIGHT TEST (m^3)	SOURCE OF MATERIAL (BORROW AREA, REQUIRED EXCAVATION, ETC.)	SOIL CLASSIFICATION SYMBOL	MINUS NO. 200 (%)	CLAYBALL CONTENT (%)	LIFT THICKNESS (mm)	METHOD OF COMPACTION (NOTE 2) NO. OF PASSES ROLLER TYPE	TIME (NOTE 3)				DRY UNIT WEIGHT AND MOISTURE CONTENT								CEMENT CONTENT (%)		COMPRESSIVE STRENGTH (kPa)			
																	FILL DRY UNIT WEIGHT				FILL MOISTURE CONTENT									
MONTH	DAY	SHIFT	NUMBER	STATUS*	STATION OFFSET COORDINATES, ELEVATION (m)								PLANT MIXING COMPLETED	LABORATORY COMPACTION COMPLETED	FILL COMPACTION COMPLETED	FILL UNIT WEIGHT TEST STARTED	TOTAL SAMPLE (kN/m^3)	MINUS NO. 4 (kN/m^3)	LABORATORY MAXIMUM DRY UNIT WEIGHT (kN/m^3)	RATIO OF FILL DRY UNIT WEIGHT TO LAB MAX DRY UNIT WEIGHT (%)	TOTAL SAMPLE (%)	MINUS NO. 4 (%) (w_f)	LABORATORY OPTIMUM (%) (w_o)	VARIATION FROM OPTIMUM (%) ($w_o - w_f$)	BY MASS FROM BATCH PLANT	BY MASS FROM CHEM. TEST	3-DAY	7-DAY	28-DAY	90-DAY
7	1	A	1	A	38+57 68.2	368	BORROW A	SP-SM	9	3.2	157	6SR 4RT	12:05	12:50	12:50	12:55	19.4	19.4	19.6	99.0	10.6	10.6	10.3	-0.3	11.9	11.7	4140	5170	6830	7720
																												5240	6960	
7	2	A	1	A	26+75 70.5	260	" C	SM	13	5.7	152	6SR 6RT	9:35	9:55	9:55	9:55	19.5	19.5	19.9	98.0	8.0	8.0	9.3	1.3	11.9	12.0	3380	4480	6210	7520
																												4210	6340	
7	2	B	1	R	25+66 71.1	378	" C	SM	19	4.8	165	6SR 6RT	13:37	14:00	14:00	14:00	18.3	18.3	20.3	90.1	10.2	10.2	9.6	-0.6	11.6	11.6				
7	2	B	1	A	25+50 71.1	378	" C	SM	19	4.8	165	6SR 9RT	13:37	14:00	14:15	14:15	19.7	19.7	20.3	97.0	10.2	10.2	9.6	-0.6	11.6	11.6	3380	4210	6140	7030
																												4480	6270	
7	3	A	1	A	26+00 73.2	374	" C	SP-SM	5	1.3	160	7SR 6RT	11:00	11:30	11:35	11:37	20.4	19.9	20.7	96.1	8.2	8.8	8.8	0.0	11.7	11.9	3590	4480	6210	7720
																												4760	5860	
7	3	A	2	A	32+80 63.9	384	" C	SP-SM	6	2.0	157	6SR 8RT	14:17	14:50	14:57	15:00	19.6	19.6	19.9	98.5	10.8	10.8	9.8	-1.0	12.5	12.8	4960	6210	7720	10,620
																												6270	7380	
7	4	A	1	A	32+25 65.1	298	" C	SP-SM	6	1.2	150	6SR 7RT	10:00	10:30	11:00	11:00	19.5	19.5	20.1	97.0	9.9	9.9	10.2	0.3	11.6	11.4	3650	5170	6760	8270
																												5380	6480	
7	4	B	1	A	31+25 66.8	230	" C	SM	13	3.8	152	6SR 6RT	13:50	14:15	14:23	14:25	19.7	19.7	20.0	98.5	10.1	10.1	8.6	-1.5	10.8	10.6	3030	4210	5310	6760
																												4340	5580	
7	5	A	1	A	33+75 67.6	307	" C	SM	19	3.5	150	6SR 6RT	10:25	11:00	11:00	11:00	19.6	19.6	19.9	98.5	10.6	10.6	9.5	-1.1	11.2	11.1	4070	4480	6340	7860
																												4620	6340	
7	5	B	1	W	32+60 69.2	92	" C	SM	35																					
7	5	B	2	A	32+61 69.2	92	" D	SM	12	3.9	160	6SR 6RT	18:50	19:15	19:23	19:27	20.4	20.4	20.2	101.0	8.4	8.4	8.8	0.4	11.8	11.7	3720	4760	5860	8890
																												4960	7520	
7	6	A	1	A	26+37 69.8	384	" D	SM	12	2.1	152	6SR 6RT	10:00	10:35	10:40	10:40	20.5	20.5	20.6	99.5	10.5	10.5	9.2	-1.3	10.9	11.1	3310	4270	6140	6900
																												4140	6070	
7	6	B	1	A	27+64 70.7	232	" D	SP-SM	7	1.0	152	6SR 6RT	14:12	14:45	14:50	14:50	20.7	20.2	20.9	96.7	7.8	8.1	8.2	0.3	11.2	11.6	3590	4620	6070	8340
																												4690	6070	

GPO 849 - 485

*A Accepted
R - Rejected
W - Wasted

NOTE 1 MIMIMUM NUMBER OF FILL UNIT WEIGHT TESTS REQUIRED
1 Test for every 400 m^3 or 2 tests per shift, whichever is greater

NOTE 2 SR-Sheepsfoot
RT-Rubber Tired
DR-Drum
VR-Vibratory Roller

NOTE 3. Time of day completed. Use 24-hour clock

Figure 2B. – Summary of compacted soil-cement tests (SI example).

7-2147 (10-83)
Bureau of Reclamation

SOIL-CEMENT CORES -- COMPRESSIVE STRENGTH SUMMARY

Project Example
Feature Example
Location Dam Facing
Specifications No. 7M-2295

Date of report: October 7, 1989
Period of report: From 9/30/89 to 10/6/89

CORE NO.	LOCATION OF CORE: STA.	OFFSET (ft)	ELEV. (ft)	LIFT NO.	LIFT THICKNESS (in)	*DENSITY TEST NO	DATE PLACED	DATE CORED	RECORD CORE AGE (days)	DIAMETER OF CORE (in)	CEMENT CONTENT (%): BY WT. FROM BATCH PLANT	CEMENT CONTENT (%): BY WT. FROM CHEM. TEST	DRY DENSITY AND MOISTURE CONTENT CONTROLLED BY PROCTOR TEST: FILL DRY DENSITY (lb/ft³): TOTAL MATL.	FILL DRY DENSITY (lb/ft³): MINUS NO. 4	LAB. STANDARD MAX. DEN. (lb/ft³)	RATIO OF FILL DRY DEN. TO LAB. MAX. DEN. (D) %	VARIATION FROM OPTIMUM w_o-w_f	LAB. OPTIMUM w_o %	COMPRESSIVE STRENGTH (lb/in²): CONST. CONTROL CYL. 3-DAY	7-DAY	28-DAY	90-DAY	RECORD CORE	LENGTH OF CORED SPECIMEN TESTED (in)	REMARKS
55	81+82	126L	228.4	2	6.1	A-7-1-A-1	7-1-89	9-30-89	91	3.05	11.9	11.7	123.6	123.6	124.8	99.0	-0.3	10.3	600	750	990	1120	1420	5.7	
																				760	1010				
			227.4	4	6.0	A-6-25-A-2	6-25-89	9-30-89	97	3.00	12.3	12.5	124.7	124.7	126.6	98.5	-1.0	9.8	720	900	1120	1540	1490	5.6	Silt balls present throughout test specimen.
																				910	1070				
56	83+64	125L	233.3	2	6.5	A-7-2-B-1	7-2-89	9-30-89	90	3.03	11.6	11.6	116.4	116.4	124.3	90.0	-0.6	9.6	490	610	890	1020	1210	6.1	
																				650	910				
			232.3	4	6.0	A-6-23-A-1	6-23-89	9-30-89	99	2.99	11.6	11.4	124.3	124.3	127.8	97.3	0.3	10.2	530	750	980	1200	1390	5.5	
																				780	940				
57	83+62	124L	233.8	1	5.9	A-7-4-B-2	7-4-89	9-30-89	88	4	10.8	10.6	125.3	125.3	127.3	98.4	-1.5	8.6	440	610	770	980	—	—	Entire core sent to Denver office laboratory for inspection and testing.
																				630	810				
			233.3	2	6.5	A-7-2-B-1	7-2-89	9-30-89	90	4	11.6	11.6	116.4	116.4	129.3	90.0	-0.6	9.6	490	610	890	1020	—	—	
																				650	910				
			232.8	3	6.0	A-6-25-A-1	6-25-89	9-30-89	97	4	11.2	11.1	124.7	124.7	126.9	98.3	-1.1	9.5	590	650	920	1140	—	—	
																				670	920				
			232.3	4	6.0	A-6-23-A-1	6-23-89	9-30-89	99	4	10.9	11.1	130.8	130.8	130.9	99.9	-1.3	9.2	480	620	890	1000	—	—	
																				600	880				
			231.8	5	6.3	A-6-20-B-2	6-20-89	9-30-89	102	4	11.0	11.0	132.7	128.7	132.9	96.8	-1.0	8.7	500	630	920	1100	—	—	
																				650	950				
58	106+97	127L	226.9	2	6.3	A-7-5-B-2	7-5-89	10-4-89	98	3.05	11.8	11.7	129.8	129.8	128.6	100.9	0.4	8.8	540	690	850	1290	1270	6.0	Silt balls present throughout test specimen.
																				720	1090				
			225.9	4	6.5	A-6-27-B-1	6-27-89	10-4-89	106	3.00	10.9	11.0	127.2	127.2	129.1	98.5	0.6	9.0	460	650	900	1010	1100	6.0	
																				680	910				
59	90+70	126L	231.9	2	6.0	A-7-6-B-1	7-6-89	10-4-89	97	3.03	11.2	11.6	131.9	128.4	132.9	96.6	0.3	8.4	520	670	880	1210	1160	5.6	
																				680	880				
			230.9	4	6.4	A-7-1-A-2	7-1-89	10-4-89	102	3.01	11.4	11.3	128.4	128.4	128.9	99.6	0.0	9.6	540	740	990	1240	1250	6.0	
																				760	990				

*closest field density test

GPO 842-251

Figure 3A. - Soil-cement cores — compressive strength summary (in-lb example).

7M-2147 (11-85)
Bureau of Reclamation

SOIL-CEMENT CORES -- COMPRESSIVE STRENGTH SUMMARY

Project Example
Feature Example
Location Dam Facing
Specifications No. 7M - 2295

Date of report: Month October 7 Year 1989
Period of report: From 9/30/89 to 10/6/89

Designation USBR 5830 - 89

Sheet 1 of 1

CORE NO.	LOCATION OF CORE: STA. (m)	OFFSET (m)	ELEV. (m)	LIFT NO.	LIFT THICKNESS (mm)	*UNIT WEIGHT TEST NO	DATE PLACED	DATE CORED	RECORD CORE AGE (days)	DIAMETER OF CORE (mm)	CEMENT CONTENT (%): BY DRY MASS FROM BATCH PLANT	CEMENT CONTENT (%): BY DRY MASS FROM CHEM. TEST	DRY UNIT WEIGHT AND MOISTURE CONTENT: FILL DRY UNIT WEIGHT (kN/m³) TOTAL SAMPLE	FILL DRY UNIT WEIGHT (kN/m³) MINUS NO.4	LAB MAXIMUM DRY UNIT WEIGHT (kN/m³)	RATIO OF FIELD DRY UNIT WEIGHT TO LAB MAX DRY UNIT WEIGHT (%)	VARIATION FROM OPTIMUM (w_o-w_f) - (%)	LABORATORY OPTIMUM (w_o) - (%)	COMPRESSIVE STRENGTH (kPa): CONST. CONTROL CYL. 3 DAY	7-DAY	28-DAY	90 DAY	RECORD CORE	LENGTH OF CORED SPECIMEN TESTED (mm)	REMARKS
55	25+94	38.4L	69.62	2	155	A-7-1-A-1	7-1-89	9-30-89	91	77.5	11.9	11.7	19.4	19.4	19.6	99.0	-0.3	10.3	4140	5170	6830	7720	9790	145	
																				5240	6960				
			69.31	4	152	A-6-25-A-2	6-25-89	9-30-89	97	76.2	12.3	12.5	19.6	19.6	19.9	98.5	-1.0	9.8	4960	6210	7720	10,620	10,270	142	Silt balls present throughout test
																				6270	7380				specimen.
56	25+49	38.1L	71.11	2	165	A-7-2-B-1	7-2-89	9-30-89	90	77.0	11.6	11.6	18.3	18.3	19.5	93.8	-0.6	9.6	3380	4210	6140	7030	8340	155	
																				4480	6270				
			70.81	4	152	A-6-23-A-1	6-23-89	9-30-89	99	75.9	11.6	11.4	19.5	19.5	20.1	97.0	0.3	10.2	3650	5170	6760	8270	9580	140	
																				5380	6480				
57	25+48	37.8L	71.26	1	150	A-7-4-B-2	7-4-89	9-30-89	88	102	10.8	10.6	19.7	19.7	20.0	98.5	-1.5	8.6	3030	4210	5310	6760	—	—	Entire core sent to Denver office
																				4340	5580				laboratory for inspection and testing.
			71.11	2	165	A-7-2-B-1	7-2-89	9-30-89	90	102	11.6	11.6	18.3	18.3	20.3	90.1	-0.6	9.6	3380	4210	6140	7030	—	—	
																				4480	6270				
			70.96	3	152	A-6-25-A-1	6-25-89	9-30-89	97	102	11.2	11.1	19.6	19.6	19.9	98.5	-1.1	9.5	4070	4480	6340	7860	—	—	
																				4620	6340				
			70.81	4	152	A-6-23-A-1	6-23-89	9-30-89	99	102	10.9	11.1	20.5	20.5	20.6	99.5	-1.3	9.2	3310	4270	6140	6900	—	—	
																				4140	6070				
			70.65	5	160	A-6-20-B-2	6-20-89	9-30-89	102	102	11.0	11.0	20.8	20.2	20.9	96.7	-1.0	8.7	3450	4340	6340	7580	—	—	
																				4480	6550				
58	32+60	38.7L	69.16	2	160	A-7-5-B-2	7-5-89	10-4-89	98	77.5	11.8	11.7	20.4	20.4	20.2	101.0	0.4	8.8	3720	4760	5860	8890	8760	152	Silt balls present throughout test
																				4960	7520				specimen.
			68.85	4	165	A-6-27-B-1	6-27-89	10-4-89	106	76.2	10.9	11.0	20.0	20.0	20.3	98.5	0.6	9.0	3170	4480	6210	6960	7580	152	
																				4690	6270				
59	27+65	38.4L	70.68	2	152	A-7-6-B-1	7-6-89	10-4-89	97	77.0	11.2	11.6	20.7	20.2	20.9	96.7	0.3	8.4	3590	4620	6070	8340	8000	142	
																				4690	6070				
			70.38	4	163	A-7-1-A-2	7-1-89	10-4-89	102	76.5	11.4	11.3	20.2	20.2	20.2	100.0	0.0	9.6	3720	5100	6830	8550	8620	152	
																				5240	6830				

*Unit weight test

GPO 849-4

Figure 3B. – Soil-cement cores — compressive strength summary (SI example).

UNITED STATES DEPARTMENT OF THE INTERIOR
BUREAU OF RECLAMATION

USBR 5835-89

PROCEDURE FOR

PERFORMING RECORD CORING AND CROSS SECTIONING OF COMPACTED SOIL-CEMENT

INTRODUCTION

This procedure is under the jurisdiction of the Geotechnical Services Branch, code D-3760, Research and Laboratory Services Division, Denver Office, Denver, Colorado. The procedure is issued under the fixed designation USBR 5835. The number immediately following the designation indicates the year of acceptance or the year of last revision. Corresponding forms in SI units are included. The SI forms have the letter M following the first digit in the form number.

1. Scope

1.1 This designation outlines the procedure for performing record coring and cross sectioning of compacted soil-cement.

2. Applicable Documents

2.1 *USBR Procedures*:
USBR 5810 Performing Compressive Strength Testing of Soil-Cement Cylinders
USBR 5820 Performing Wet-Dry Durability Testing of Compacted Soil-Cement Mixtures
USBR 5825 Performing Freeze-Thaw Durability Testing of Compacted Soil-Cement Mixtures
USBR 5830 Performing Construction Control of Soil-Cement
2.2 *USBR Document*:
Driller's Safety Manual

3. Summary of Method

3.1 Three-inch (76-mm) and four-inch (102-mm) diameter core samples of soil-cement are obtained through the entire thickness of a soil-cement section or facing using a rotary drill equipped with a masonry type diamond drill bit. The coring is performed 28, 90, and 360 days after soil-cement placement and samples are retrieved, labeled, and logged. Generally, 3-inch diameter core samples are tested for compressive strength by the field laboratory, and 4-inch diameter core samples are shipped to the Bureau's Denver Office for inspection, durability testing, and direct shear testing, as required.

3.2 Following the 28-day coring, steel reinforcing bar is placed into each 3-inch (76-mm) diameter drill hole and grouted into place. The bar is placed so it extends 1 to 2 inches (25 to 50 mm) above the surface of the soil-cement. Record cross sections are taken then at these locations. Soil-cement cross sections are plotted referencing (1) the locations and elevations of the reinforcing bars, and (2) the thickness of the soil-cement is determined from record coring.

4. Significance and Use

4.1 Soil-cement record coring is performed for construcion control (USBR 5830) and record purposes.

4.1.1 Record cores are obtained at 28, 90 and 360 days after placement.

4.1.2 Record coring is conducted to determine the quality and the total thickness of the soil-cement, and to evaluate bonding between lifts of soil-cement.

4.1.3 Record core drill hole locations are based on the design of the soil-cement structure. Hole locations and core diameters required for testing should be determined prior to start of construction. Cores should be obtained also in any area of questionable soil-cement quality.

4.2 Record cross sections are determined at locations where the 3-inch (76-mm) diameter, 28-day core samples are obtained.

4.3 Results from: record coring, laboratory test results on record core samples, and the plotted cross sections are used to assess soil-cement deterioration when inspected in future years.

5. Terminology

5.1 All definitions are in accordance with USBR 3900.

6. Apparatus

6.1 *Equipment Unique to This Procedure*:

6.1.1 *Drill and Drill Stand.*–A rotary drill capable of drilling 4-inch (102-mm) diameter core samples up to 4 feet (1.2 m) in length. The drill must be capable of drilling vertical holes on soil-cement slopes. The drill should be mounted and the drill stand anchored so that the drill and stand are stable during the drilling process. Figure 1 is a view of a drill and stand that have been successfully used for coring soil-cement.

6.1.2 *Adaptors.*–Removable extension adaptors and extension rods compatible with drill and core barrels.

6.1.3 *Water.*–Water supply for drilling to remove cuttings and cool drill bits.

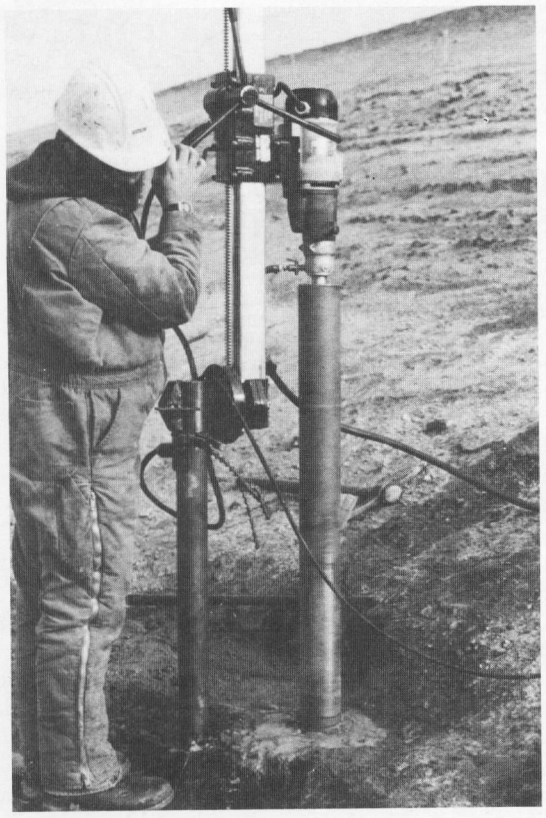

(a) View of coredrill set-up used for soil-cement coring.

(b) Close-up view of soil-cement coring operation.

Figure 1. – Drill and stand used for coring soil-cement.

6.1.4 *Generator.*–Portable electric generator suitable for supplying electric power to drill.

6.1.5 *Impact Drill.*–Rotary impact drill or other suitable device for drilling holes for anchor bolts.

6.1.6 *Anchors.*–Anchors and bolts adequate for securing the drill stand to the soil-cement.

6.1.7 *Core Barrels.*–Diamond surface set or diamond impregnated masonry drill bits, 3- and 4-inch (76- and 102-mm) inside diameter, preferably of sufficient length to penetrate the full vertical depth of the soil-cement.

6.1.8 *Core Retrieval Barrels.*–Worn 3- and 4-inch-diameter (76- and 102-mm) masonry drill bits with cutting edge removed and slotted on the drilling end for retrieving core samples (fig. 2).

6.1.9 *Shipping Boxes.*–Cardboard boxes with Styrofoam inserts and plywood bottoms for shipping 4-inch (102-mm) diameter core samples to the Bureau's Denver Office.

6.1.10 *Reinforcing Bars.*–Sections of No. 4 steel reinforcing bar cut to appropriate lengths. The reinforcing bar should be of sufficient length to penetrate the entire vertical depth of the soil-cement facing and extend 1 to 2 (25- to 50-mm) inches above the surface of the soil-cement.

6.2 *Miscellaneous Equipment*:

6.2.1 Assorted tools necessary for drilling operations, chain tongs and pipe wrenches for installing and removing core barrels, and waterproof markers for labeling core samples.

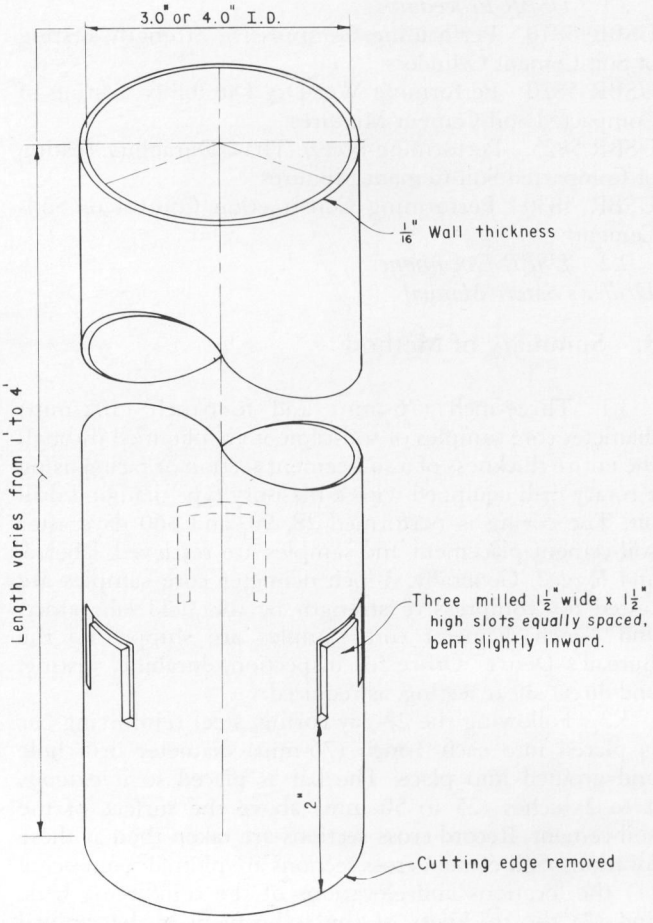

Figure 2. – Core retrieval barrels made from worn diamond studded core barrels.

6.2.2 Concrete premix, bagged cement, or grout premix, and potable water for backfilling drill holes.

7. Precautions

7.1 *Safety Precautions.*

7.1.1 This designation may involve hazardous materials, operations, and equipment.

7.1.2 Safety hazards may be involved in use of the rotary drill. Refer to the manufacturer's handbook and the Bureau's *Driller's Safety Manual* before operating the drill.

7.1.3 Ensure that electrical supply lines are well insulated and connections kept dry to prevent electrical shock.

7.1.4 Use caution when refilling gasoline tanks on electrical generators.

7.1.5 Drilling equipment and core samples are heavy and awkward to handle; use care when lifting and transporting.

7.1.6 Drilling operations often take place on sloped surfaces. Adequate safety shoes or boots should be worn to prevent slipping into machinery or down the slope.

7.1.7 Wear gloves to protect hands during coring operations.

7.1.8 Wear safety glasses and hardhat.

7.2 *Technical Precautions*:

7.2.1 Core barrels should remain vertical, and the drill and stand should be stable while drilling to prevent core from binding in the barrel.

7.2.2 Drilling should be performed at a slow rotational speed, with constant feed pressure such that the core is not damaged during the drilling operations.

7.2.3 Core retrieval barrels should be of sufficient length to remove the core through the entire depth of soil-cement in one piece.

8. Sampling, Test Specimens, and Test Units

8.1 Frequency and location of coring and cross sectioning of soil-cement structures are considered on an individual basis by Denver Office personnel.

9. Calibration and Standardization

9.1 Not applicable; reference standards are not used in this procedure.

10. Conditioning

10.1 Place core samples in shipping boxes and cover immediately after retrieval to prevent moisture loss.

11. Procedure

11.1 All data are to be recorded on the form "Log of Soil-Cement Drill Hole" shown on figure 3A or 3B. Figure 3A is an example using inch-pound units and figure 3B uses SI units.

11.2 Anchor the drill stand to the soil-cement in a manner which effectively stabilizes the drill and drill stand during drilling.

11.3 As required, install a 3- or 4-inch (76- or 102-mm) inside diameter core barrel of sufficient length to penetrate the full vertical depth of the soil-cement section of facing.

11.4 Drill vertically through the entire depth of soil-cement to the embankment or foundation contact in one continuous operation.

11.4.1 Drilling is to progress slowly and continuously to minimize damage to the core.

11.4.2 If the core has broken and is binding in the core barrel, stop drilling, remove the core barrel, and retrieve the broken pieces of core with the core retrieval barrel before continuing.

11.4.3 If the depth of soil-cement exceeds the maximum length of the core barrel, remove the core barrel and retrieve core with core retrieval barrel. Add an extension rod and continue drilling to embankment or foundation contact.

11.5 Remove the core barrel, and install a core retrieval barrel of sufficient length to remove the core in one piece.

11.6 Retrieve the core in one operation by inserting the core retrieval barrel over the full length of core and extracting both from the hole. As soon as the core retrieval barrel and core are out of the hole, place a cover over the hole to prevent core from falling back into the hole.

11.7 Remove the core retrieval barrel from the drill and carefully remove the core from the barrel by pushing the core out the top. Place the core in the shipping box in the exact order that it was retrieved.

11.8 Immediately label the core by hole number and position in the hole from top to bottom. Indicate the direction of top on each piece of core.

11.9 Log the hole as shown on figure 3A or 3B. Note the drilling method, depth at which breaks occur in core, lift contacts, embankment or foundation contact, bonding agent used (if any); and other pertinent information (i.e., clayballs, loose material, poor compaction, etc.).

11.10 When possible, keep the shipping box lid closed to prevent moisture loss.

11.11 Refill all core holes with grout or premix slurry.

11.11.1 Following the 28-day coring, grout No. 4 steel reinforcing bar into each 3-inch (76-mm) diameter drill hole through the entire vertical depth of soil-cement. Place grout around the reinforcing bar so the bar extends 1 to 2 inches (25 to 50 mm) above the surface of the soil-cement.

11.12 Carefully pack the cores to prevent damage during transit.

11.13 Generally, 3-inch (76-mm) diameter core will be tested by the field laboratory and 4-inch (102-mm) diameter core will be shipped to the Bureau's Denver Office for inspection and laboratory testing.

11.13.1 Ensure that the cores are labeled completely and packed securely before shipping to prevent damage during shipment.

11.14 Following the 28-day coring operation, coordinate cross sectioning of the soil-cement with a survey crew. Obtain stations, elevations, and offsets of reinforcing bars

installed during record coring. Measure the distance the reinforcing bars extend above the surface of the soil-cement. Plot cross sections referencing reinforcing bars installed after record coring and thickness of soil-cement determined during the record coring. Refer to figure 4A or 4B for an example of a typical soil-cement cross section. (Figure 4A is in in-lb units and figure 4B is in SI units.)

11.14.1 When wear or damage to the soil-cement is suspected, a more detailed cross section is required to assess damage. Figure 5 is an example showing the detail required.

11.15 Core samples of 90- and 360-days are taken immediately adjacent to the locations of the 28-day core holes.

12. Calculations

12.1 Not applicable, calculations are not required for this procedure.

13. Report

13.1 The report is to consist of the completed "Log of Soil-Cement Drill Hole" form (fig. 3A or 3B).

13.2 Plots of soil-cement cross sections (figs. 4A and 4B are examples).

13.3 When wear or damage to the soil-cement is suspected, a more detailed cross section is required (fig. 5).

7-2134 (9-85)
Bureau of Reclamation

LOG OF SOIL-CEMENT DRILL HOLE

Designation USBR 5835 8 9

Project Example | Feature Example | Location Outlet Works

Hole No. 16 | Station 121+86 | Offset 42.00 Left ℄

Ground Elevation 226.5' | Total Depth 3.40' | Core Diameter 3"

Date Cored 11-8-89 | Logged By CARVAJAL | Approved By CRAIG

NOTES a) Description of drilling method b) Other pertinent information	SPECIMENS FOR TESTING	DEPTH (ft)	GRAPHIC LOG (Show lift lines)	DESCRIPTION OF CORE DESCRIPTION OF BOND BETWEEN LIFTS a) Bonding agent used (if any) b) Condition of bond c) Description of break
USE 3/4" ELECTRIC ROTARY DRILL WITH STAND ANCHORED TO SOIL-CEMENT. CORE BARREL DIAMOND TIPPED-3" INSIDE DIAMETER.	16.1	0.55		LIFT CONTACT - BONDED
		1 1.10		LIFT CONTACT - NO BOND
	16.2	1.60		POOR COMPACTION - VOIDS
HOLE BACKFILLED WITH PREMIX CONCRETE.				0.1' CLAYBALL
		2		LIFT CONTACT - BONDED
	16.3	2.05		
		2.45		LIFT CONTACT - BONDED
		2.65		FRACTURE WITHIN LIFT
		2.90		LIFT CONTACT - BONDED
SPECIMENS 16-1 AND 16-3 SELECTED FOR DURABILITY TESTING.	16.4	3		
		3.40		EMBANKMENT CONTACT
		4		CEMENT SLURRY USED AS BONDING AGENT BETWEEN LIFTS

GPO 848-598

Figure 3A. – Log of soil-cement drill hole (in-lb example).

7M-2134 (9-85)
Bureau of Reclamation

LOG OF SOIL-CEMENT DRILL HOLE

Designation USBR 5835 8 9

Project Example | Feature Example | Location Outlet Works

Hole No. 16 | Station 121+86 | Offset 13.64 m Left ℄

Ground Elevation 75.3 m | Total Depth 104.1 cm | Core Diameter 76-mm

Date Cored 11-8-89 | Logged By CARVAJAL | Approved By CRAIG

NOTES

a) Description of drilling method
b) Other pertinent information

USE 19mm ELECTRIC ROTARY DRILL WITH STAND ANCHORED TO SOIL-CEMENT. CORE BARREL DIAMOND TIPPED - 76 - mm INSIDE DIAMETER.

HOLE BACKFILLED WITH PREMIX CONCRETE.

SPECIMENS 16-1 AND 16-3 SELECTED FOR COMPRESSIVE STRENGTH TESTING.

SPECIMENS FOR TESTING	DEPTH (cm)	GRAPHIC LOG (Show lift lines)	DESCRIPTION OF CORE DESCRIPTION OF BOND BETWEEN LIFTS a) Bonding agent used (if any) b) Condition of bond c) Description of break
16-1	16.5		LIFT CONTACT; BONDED
	33.0		LIFT CONTACT; NO BOND
16-2			POORLY COMPACTED LIFT, VOIDS
	49.5		LIFT CONTACT; NO BOND
	50		3.5 cm CLAYBALL
	62.2		LIFT CONTACT; BONDED
16-3	74.9		LIFT CONTACT; BONDED
	81.3		FRACTURE WITHIN LIFT
	88.9		LIFT CONTACT; BONDED
16-4	100		
	104.1		EMBANKMENT CONTACT
	150		CEMENT SLURRY USED AS BONDING AGENT BETWEEN LIFTS

GPO 849-599

Figure 3B. – Log of soil-cement drill hole.(SI-example).

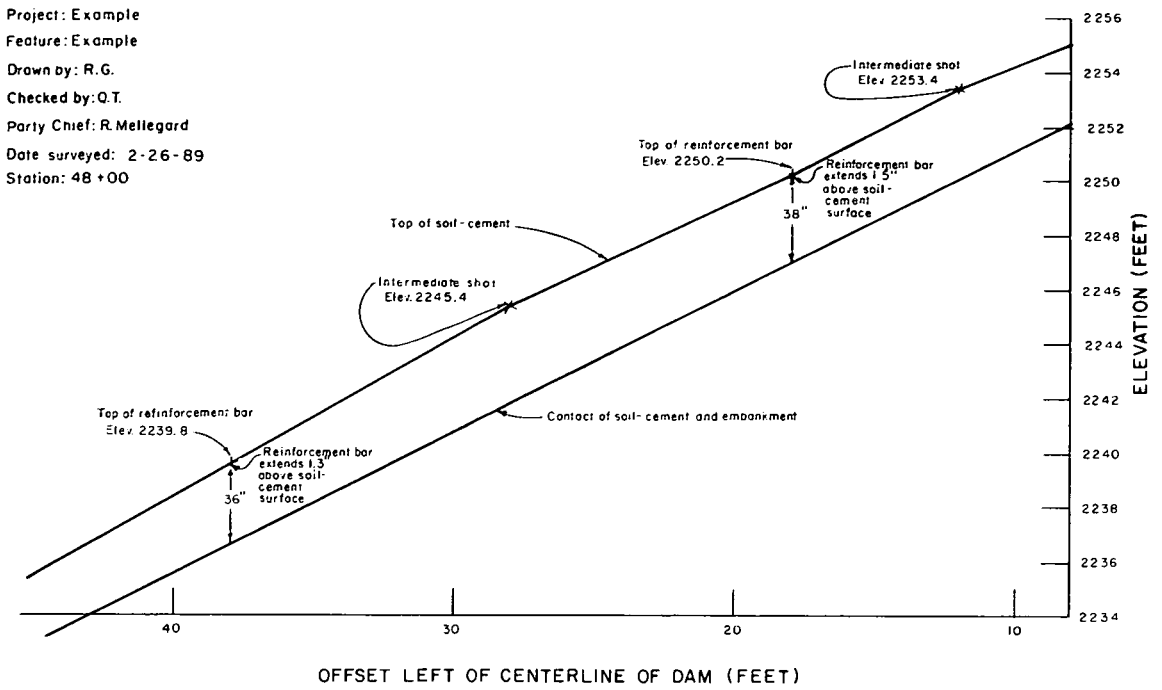

Figure 4A. – Soil-cement cross section (in-lb example).

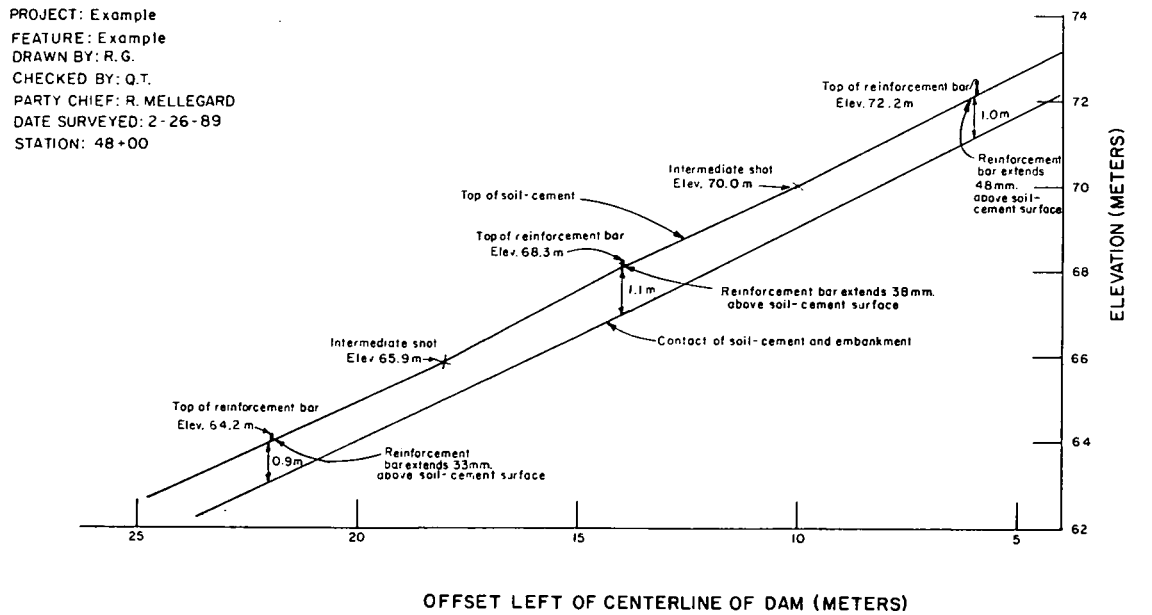

Figure 4B. – Soil-cement cross section (SI example).

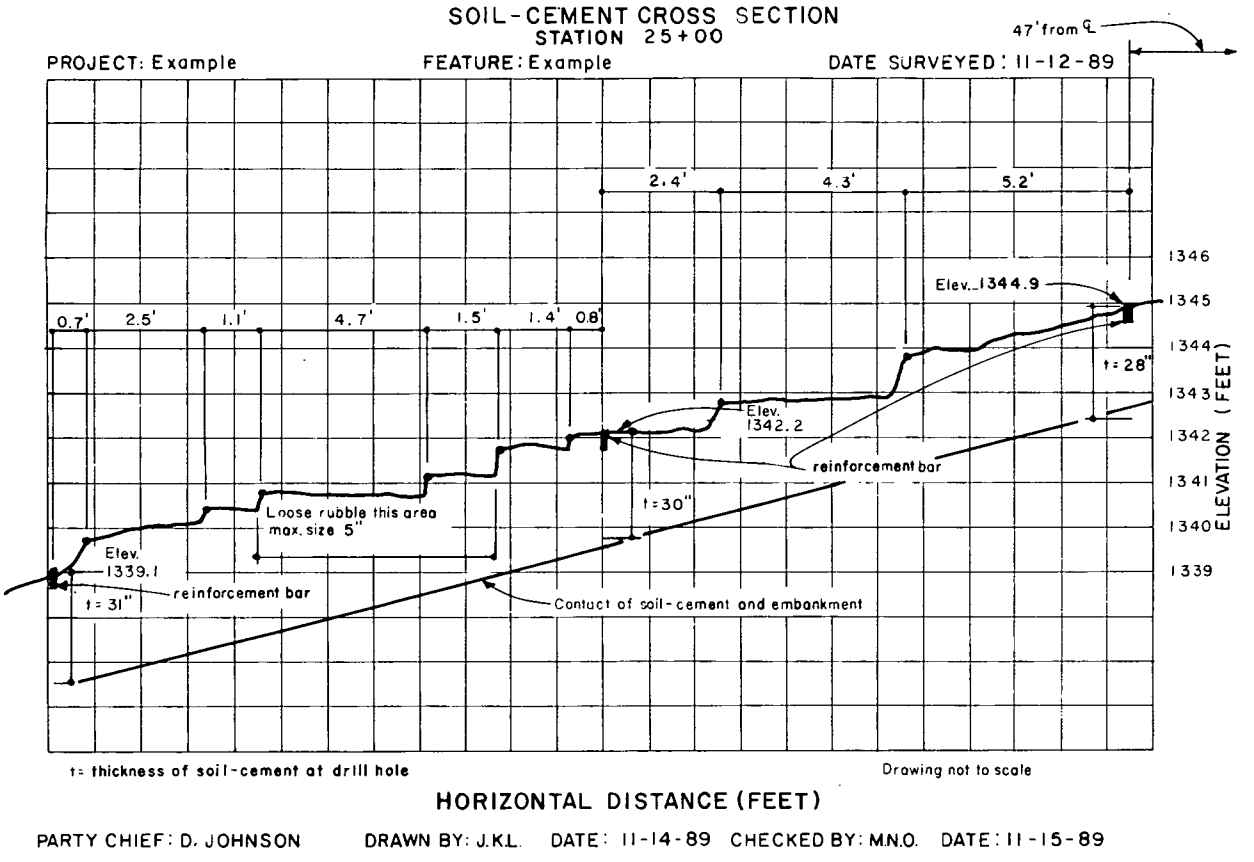

Figure 5. - Soil-cement cross-section detail — example.

UNITED STATES DEPARTMENT OF THE INTERIOR
BUREAU OF RECLAMATION

USBR 5850-89

PROCEDURE FOR

PERFORMING LABORATORY COMPACTION OF SOIL-LIME MIXTURES

INTRODUCTION

This procedure is under the jurisdiction of the Geotechnical Services Branch, code D-3760, Research and Laboratory Services Division, Denver Office, Denver, Colorado. The procedure is issued under the fixed designation USBR 5850. The number immediately following the designation indicates the year of acceptance or the year of last revision.

1. Scope

1.1 This designation outlines the procedure for performing laboratory compaction of soil-lime mixtures.

1.2 This procedure is performed to determine the relationship between the moisture content and the dry unit weight of soil-lime when compacted with a given compactive effort. A compaction curve is plotted from which the optimum moisture content and maximum dry unit weight can be determined.

1.3 This procedure is typically performed using a mechanical compactor that has been calibrated to produce the same effect as a manual compactor using a 5.5-lbm rammer and an 18-inch drop.

1.4 This procedure is limited to soil particles passing the No. 4 sieve.

1.5 This procedure is identical to USBR 5500 except for requirements and information related to lime and soil-lime mixtures.

1.6 USBR 5500 differs from method A of ASTM D 698. USBR 5500 uses a 1/20-ft^3 compaction mold and is based on a manual rammer drop of 18 inches. ASTM D 698 uses a 1/30-ft^3 compaction mold and is based on a manual rammer drop of 12 inches. Both methods, however, impart the same compactive effort of 12,375 ft·lbf/ft^3 to the soil specimen.

2. Auxiliary Tests

2.1 A test sample must be obtained in accordance with USBR 5205 prior to performing this procedure.

2.2 The moisture content must be determined in accordance with USBR 5300 as part of performing the procedure.

3. Applicable Documents

3.1 *USBR Procedures*:

USBR 1009 Calibrating Compaction Molds
USBR 1012 Calibrating Balances or Scales
USBR 1020 Calibrating Ovens
USBR 1025 Checking Sieves
USBR 1415 Calibrating Laboratory Mechanical Compactors
USBR 3900 Standard Definitions of Terms and Symbols Relating to Soil Mechanics
USBR 5205 Preparing Soil Samples by Splitting or Quartering
USBR 5300 Determining Moisture Content of Soil and Rock by the Oven Method
USBR 5500 Performing Laboratory Compaction of Soils — 5.5-lbm Rammer and 18-in Drop
USBR 5505 Determining Moisture Content-Penetration Resistance Relationships of Fine-Grained Soils
USBR 5855 Preparing Soil-Lime Specimens for Compression Testing
USBR 5860 Performing Compressive Strength Testing of Compacted Soil-Lime Mix

3.2 *ASTM Standards*:

D 698 Moisture-Density Relations of Soils and Soil-Aggregate Mixtures Using 5.5-Pound (2.49-kg) Rammer and 12-Inch (305-mm) Drop
E 11 Specification for Wire Cloth Sieves

4. Summary of Method

4.1 A minimum of five specimens from the same soil-lime mixture are prepared, each at a different moisture content. Each specimen is compacted in a mold using the same compactive effort. The moisture content and resulting dry unit weight of each specimen are determined, plotted, and a compaction curve constructed. From the compaction curve, the optimum moisture content and the maximum dry unit weight are determined.

5. Significance and Use

5.1 Laboratory tests are conducted on soil-lime mixtures to determine the lime content to be specified for a lime stabilized soil. Laboratory compaction tests are performed on soil-lime mixtures to determine the optimum moisture content and maximum dry unit weight to be used for molding soil-lime specimens in accordance with the procedure described in USBR 5855. The specimens are tested for compressive strength in accordance with USBR 5860.

6. Terminology

6.1 Definitions are in accordance with USBR 3900. Terms of particular significance are:

6.1.1 *Compaction Curve.*–The curve showing the relationship between the dry unit weight and the moisture content of a soil for a given compactive effort (ASTM definition).

6.1.2 *Maximum Unit Weight* (γ_{max}).–The dry unit weight defined by the peak of a compaction curve.

6.1.3 *Optimum Moisture Content* (w_o, %).–The moisture content at which a soil can be compacted to the maximum dry unit weight by a given compactive effort (ASTM).

6.2 Terms not included in USBR 3900 specific to this designation are:

6.2.1 *Compactive Effort.*–The theoretical energy used to compact soil into a known volume, expressed as ft·lbf/ft^3. Compactive effort is computed as the product of the drop height, rammer mass, blows per layer, and number of layers divided by the volume of the mold.

6.2.2 *Hydrated Lime.*–The common name for calcium hydroxide [$Ca(OH)_2$], a complex formed by the bond of water to calcium that initiates hydration.

6.2.3 *Lime Content.*–Amount of lime added to a soil, specified by percent of dry soil mass.

6.2.4 *Quicklime.*–The common name for calcium oxide (CaO).

7. Interferences

7.1 Variations in rammer drop height, rammer mass, or number of blows per layer will result in erroneous test data because of nonstandard compactive effort. To ensure a given compactive effort, the mechanical compactor must be inspected and calibrated in accordance with USBR 1415.

8. Apparatus

8.1 *General Apparatus*:

8.1.1 *Balance or Scale.*–A typical balance or scale used to determine moisture content must be readable to 0.1 g and have a capacity of about 1000 g.

8.1.2 *Balance or Scale.*–A typical balance or scale used to measure the mass of the compaction specimen must be readable to 0.01 lbm and have a capacity of about 50 lbm.

8.1.3 *Desiccator.*–An enclosed container, with a moisture-absorbing chemical compound inside, used for cooling a heated soil sample while maintaining zero change in moisture content due to condensation.

8.1.4 *Dish, Evaporating.*–A suitable dish resistant to corrosion or changes in mass when subjected to repeated heating, cooling, or cleaning.

8.1.5 *Drying Oven.*–An oven, thermostatically controlled, preferably of the forced-draft type, and capable of maintaining a uniform temperature of 230±9 °F (110±5 °C) throughout the drying chamber.

8.1.6 *Graduated Cylinder.*–1000-mL capacity, graduated to 10 mL.

8.1.7 *Sieve.*–U.S.A. Standard series No. 4 (4.75 mm) sieve with stand, conforming to the requirements of ASTM E 11.

8.1.8 *Straightedge.*–A stiff metal straightedge of convenient length. The scraping edge must be beveled if it is thicker than 1/8 inch.

8.2 *Equipment Unique to This Procedure* (See USBR 5500, figs. 1, 2, and 3.)

8.2.1 *Compaction Apparatus.*–A mechanical compaction device with a rammer having an initial mass of 5.5 lbm, an adjustable height of drop of about 12 to 18 inches, and a counter for registering the number of blows. If a mechanical compactor is not available, a manual tamper may be used instead (see USBR 5500 app. X2). The device includes a 1/20-ft^3 mold with baseplate. The mold assembly must rest firmly on a uniform, rigid foundation, equivalent to a 200 lbm or larger block of concrete.

NOTE 1.–There are several varieties of commercially available molds; the mold may be fabricated. Figure 3 in USBR 5500 is typical. Critical requirements are the tapered design, the inside diameter, and the height.

8.2.2 *Extruder for Compaction Specimen.*–A mechanical device for removing a compacted soil-lime specimen from a compaction mold.

8.2.3 *Moisture-Proof Containers.*–Cylindrical plastic containers, about 6-inch diameter by 12 inches long, using a plastic inner bag for sealing and storing specimens to be tested.

8.3 *Miscellaneous Equipment.*–Brushes, knife, mixing pan, scoop, etc., for mixing, placing, or trimming soil-lime specimens.

9. Reagents and Materials

9.1 Tapwater that is free of acids, alkalies, or oils and is suitable for drinking should be used for wetting the soil prior to compaction.

9.2 Either hydrated lime, calcium hydroxide [$Ca(OH)_2$] or quicklime, calcium oxide (CaO).

10. Precautions

10.1 *Safety Precautions*:

10.1.1 This procedure may involve hazardous materials, operations, and equipment.

10.1.2 Do not place hands near the top of the mold when the mechanical rammer is operating.

10.1.3 Hydrated lime or quicklime becomes very hot when it chemically combines with water. Appropriate safety equipment such as gloves, protective eyewear, respirator, and plastic apron should be worn when handling lime.

10.2 *Technical Precautions*:

10.2.1 The lime content is specified by percent of dry mass of soil. Two types of lime may be used (1) quicklime, which is in the dry state; and (2) hydrated lime (calcium hydroxide), which is a combination of lime and approximately 32 percent water. Therefore, computations to determine the mass of quicklime or hydrated lime

(calcium hydroxide) are different. For providing an equal amount of lime that will react with the soil, the percent of quicklime is equal to 1.32 times the percent of hydrated lime.

10.2.2 The soil, lime, and water mixture is alkaline and reacts with metal and glass; therefore, plastic containers must be used.

10.2.3 The reaction of lime with the soil will occur continously as long as there is free-lime available. The time effect on the properties of the soil-lime mixture is most pronounced during the first 72 hours. Therefore, the time of compaction after mixing the soil, lime, and water has a significant effect on the results. The time of compaction needs to correlate with the anticipated use of the soil-lime and the construction procedures.

11. Sampling, Test Specimens, and Test Units

11.1 If the soil can be air dried, follow the steps in subparagraph 11.2. If the soil is to be tested without air drying, follow the steps in subparagraph 11.3. In either case, if enough soil is not available, carefully plan the number of specimens and corresponding moisture contents to use the available soil.

11.2 *Air Dry Preparation*:

11.2.1 For each lime content, prepare a test-sample of about 50 lbm of minus No. 4 soil in accordance with USBR 5205.

11.2.2 Air dry the test sample if the soil was not air-dried as part of performing USBR 5205.

11.2.3 Split the test sample into six specimens in accordance with USBR 5205. Set aside one of the specimens and keep it at the air-dried moisture content in case an additional specimen is requested.

11.2.4 Add the specified amount of lime to each of the five remaining specimens. Mix the soil and lime thoroughly until uniform throughout.

11.2.5 Prepare the five specimens for compaction by adding increasing amounts of water to each specimen so the moisture content of each succeeding specimen is about 2 percentage points higher than the previous specimen. The moisture contents selected must bracket the optimum moisture content to ensure obtaining an appropriate compaction curve. Some soils with very high optimum moisture contents may require a larger moisture content increment between specimens in order to obtain a well defined compaction curve.

NOTE 2.–Judging the optimum moisture content requires practice and experience. Because the addition of lime may significantly affect the properties of the soil, some experimentation may be required.

11.2.5.1 Thoroughly mix the soil-lime while sprinkling the water onto it to ensure an even distribution of moisture throughout the material. Record the amount of water added to each specimen on the "Soil-Lime Laboratory Compaction Test" form as shown on figure 1.

11.2.6 Place each specimen in a properly labeled moisture-proof plastic container and store for 24 hours. Depending on the specific use of the soil-lime, the storage time may be increased or decreased. Proceed to paragraph 12.

11.3 *Moist Preparation*:

11.3.1 For each lime content, prepare a test sample of about 50 lbm of minus No. 4 (4.75 mm) soil by passing the soil through a No. 4 sieve. If plus No. 4 particles are present, select enough material to obtain 50 lbm of minus No. 4 soil.

11.3.2 Thoroughly mix the soil and separate into six specimens. Set aside one of the specimens and keep it in a moisture-proof container in case an additional specimen is required.

11.3.3 Add the specified amount of lime to each of the five remaining specimens. Mix the soil and lime thoroughly.

11.3.4 Prepare the five specimens by adding or subtracting water to each specimen so the moisture content of each succeeding specimen is about 2 percentage points wetter or dryer than the previous specimen. The moisture contents selected must bracket the optimum moisture content to ensure obtaining an appropriate compaction curve. Some soil-lime mixtures having very high optimum moisture contents may require a larger moisture content increment between specimens in order to obtain a well defined compaction curve (see note 2).

11.3.4.1 When adding water, thoroughly mix the soil-lime while sprinkling the water onto the surface to ensure an even distribution of moisture throughout the material.

11.3.4.2 When subtracting water, thoroughly mix the soil-lime while drying by using a fan or other device to blow dry air across the pan of soil-lime. Other drying methods may be used, provided the soil-lime temperature does not exceed 140 °F (60 °C).

11.3.4.3 Record the amount of water added to, or subtracted from, each specimen on the "Soil-Lime Laboratory Compaction Test" form as shown on figure 1. The mass loss on specimens that have been dried must be determined on specimens after they have cooled to room temperature if heat was used during the drying.

11.3.5 Store each specimen in accordance with subparagraph 11.2.6

12. Calibration and Standardization

12.1 Verify that equipment is currently calibrated in accordance with the applicable calibration procedure. If the calibration is not current, perform the calibration before using the equipment for this procedure.

USBR 1009 Calibrating Compaction Molds
USBR 1012 Calibrating Balances or Scales
USBR 1020 Calibrating Ovens
USBR 1025 Checking Sieves
USBR 1415 Calibrating Laboratory Mechanical Compactors

13. Conditioning

13.1 Place the material for each soil-lime specimen—as prepared for testing—in a moisture-proof plastic container and store in accordance with the minimum time outlined in subparagraph 11.2.6.

14. Procedure

14.1 All data are to be recorded on the "Soil-Lime Laboratory Compaction Test" form shown on figure 1.

14.2 Determine the mass of the compaction mold to the nearest 0.01 lbm and record the value.

14.3 Ensure that the compaction device rests firmly on a level concrete (or equivalent) base.

14.4 Assemble the mold and collar and secure to the baseplate.

14.5 Select the initial specimen for testing and immediately prior to compaction, pass the material to be compacted through a No. 4 (4.75 mm) sieve to break up any lumps of soil-lime resulting from the specimen preparation procedure. Thoroughly mix the soil-lime mixture.

14.6 Place 2.0 to 2.5 lbm of soil-lime into the mold and spread into a layer of uniform thickness.

14.7 Using a mechanical or manual compaction apparatus, compact the layer with 25 blows distributed equally over the surface of the layer.

14.8 Repeat the compaction process outlined in subparagraphs 14.6 and 14.7 until three layers have been compacted. The third layer, when compacted, should extend into the collar about 1/4 inch, but not more than 1/2 inch. If, after the last layer is compacted, the specimen is too short or too long it should be discarded and a new specimen compacted.

NOTE 3.– When compacting specimens wetter than optimum moisture content, uneven compacted surfaces may occur and some operator judgment is required as to the average height of the specimen. The last blow delivered by the rammer should not extend below the top of the compaction mold.

14.9 Taking care not to disturb the compacted soil-lime within the mold, remove the collar from the mold and use a straightedge to trim the specimen flush with the top of the mold. A knife may be used to remove or loosen soil-lime sticking to the inside of the collar and for initial trimming of the compacted specimen.

14.10 Remove the mold from the baseplate.

14.11 Determine and record the mass of the mold and the compacted soil-lime to the nearest 0.01 lbm.

14.12 Perform the penetration resistance test in accordance with USBR 5505.

14.13 Extrude the specimen from the mold and cut about 1-1/2-inch-square by 6-inch-long moisture content specimen from the center of the compacted specimen. The moisture content specimen should have a mass of at least 200 grams.

14.14 Place the moisture content specimen in a suitable container for drying and determination of moisture content.

14.15 Calculate the wet density of the compacted specimen to the nearest 0.1 lbm/ft³.

14.15.1 Convert wet density to wet unit weight by changing lbm/ft³ to lbf/ft³ (assume 1 lbm = 1 lbf) and record to the nearest 0.1 lbf/ft³.

14.16 Repeat the procedure outlined in subparagraphs 14.4 through 14.15 until at least five specimens have been compacted.

NOTE 4.–After determining the wet unit weight of the second and each successive compacted specimen, compare the wet unit weights to ensure that a desired pattern is developing so that points on each side of the optimum moisture content are compacted.

14.17 Determine the moisture content of each compacted specimen in accordance with USBR 5300.

14.18 Calculate the dry unit weight for each compacted specimen and record to the nearest 0.1 lbf/ft³.

14.19 Plot the moisture contents (abscissa) and dry unit weights (ordinate) as shown on figure 2.

14.20 Draw a smooth curve connecting the plotted points.

14.21 The optimum moisture content is the moisture content corresponding to the peak of the curve. Determine the value and record to the nearest 0.1 percent.

14.22 The maximum dry unit weight is the dry unit weight corresponding to the optimum moisture content. Determine the value and record to the nearest 0.1 lbf/ft³.

14.23 If two or more plotted points do not fall on each side of the optimum moisture content, additional specimens must be prepared and compacted at appropriate moisture contents.

15. Calculations

15.1 Calculate the wet density of the compacted soil-lime specimen to the nearest 0.1 lbm/ft³.

$$\rho_{wet} = \frac{D - E}{V} \qquad (1)$$

where:

ρ_{wet} = wet density of compacted soil-lime, lbm/ft³
V = volume of mold, ft³
D = mass of mold + wet soil-lime, lbm
E = mass of mold, lbm

15.1.1 In the procedure, wet density is converted to wet unit weight by changing from lbm/ft³ to lbf/ft³. (Assume 1 lbm = 1 lbf.)

15.2 Calculate the dry unit weight of the soil-lime specimen.

$$\gamma_d = \frac{\gamma_{wet}}{1 + \frac{w}{100}} \qquad (2)$$

where:

γ_d = dry unit weight of compacted soil-lime, lbf/ft³
w = moisture content, %
γ_{wet} = wet unit weight, lbf/ft³

16. Report

16.1 The report is to consist of the following completed and checked forms:

"Soil-Lime Laboratory Compaction Test" (fig. 1).

"Soil-Lime Compaction–Penetration Resistance Curves" (fig. 2).

16.2 All calculations are to show a checkmark and all plotting must be checked.

7 2333 (1-86)
Bureau of Reclamation

SOIL-LIME LABORATORY COMPACTION TEST

Designation USBR 5850 - 89

PROJECT Example FEATURE Example

LOCATION Borrow Area DEPTH/ELEV. 0-3 ft SAMPLE NO. 1

TYPE OF LIME Quicklime PERCENT LIME 5 HEIGHT OF DROP 18 in

BLOWS PER LAYER 25 NO. OF LAYERS 3 MASS OF RAMMER 5.5 lbm

VOLUME OF CYLINDER 0.0499 ft^3 TESTED BY _____ DATE _____

COMPUTED BY _____ DATE _____ CHECKED BY _____ DATE _____

	SPECIMEN NO.	1	2	3	4	5	6
	UNIT WEIGHT DETERMINATION						
	DESIRED MOISTURE CONTENT (%)	20.0	21.0	22.5	24.0	25.0	
	WATER ADDED (mL)	60	120	180	240	300	
1	MASS OF MOLD & WET SOIL-LIME (lbm)	11.59	11.68	11.80	11.83	11.81	
2	MASS OF MOLD (lbm)	5.70	5.70	5.70	5.70	5.70	
3	MASS OF WET SOIL-LIME (lbm)	5.89	5.89	6.10	6.13	6.11	
4	WET UNIT WEIGHT (lbf/ft^3)	118.0	119.8	122.2	122.8	122.4	
	PENETRATION RESISTANCE DETERMINATION (USBR 5505)						
	NEEDLE NO.	40	20	20	20	10	
5	AREA OF NEEDLE (in^2)	1/40	1/20	1/20	1/20	1/10	
	PENETROMETER READING (lbf)	38	62	48	36	58	
		36	66	52	34	62	
		37	64	50	35	60	
6	AVERAGE READING (lbf)	37	64	50	35	60	
7	PENETRATION RESISTANCE (lbf/in^2)	1480	1280	1000	700	600	
	MOISTURE CONTENT DETERMINATION (USBR 5300)						
	DISH NO.	145	36	100	97	188	
8	MASS OF DISH & WET SOIL-LIME (g)	350.6	352.1	319.9	376.1	345.6	
9	MASS OF DISH & DRY SOIL-LIME (g)	319.3	316.5	284.7	330.7	309.3	
10	MASS OF DISH (g)	162.6	146.2	128.2	144.6	166.0	
11	MASS OF WATER (g)	31.3	35.6	35.2	45.4	36.3	
12	MASS OF DRY SOIL-LIME (g)	156.7	170.3	156.5	186.1	143.3	
13	MOISTURE CONTENT (%)	20.0	20.9	22.5	24.4	25.3	
	DRY UNIT WEIGHT DETERMINATION						
14	DRY UNIT WEIGHT (lbf/ft^3)	98.3	99.1	99.8	98.7	97.7	

REMARKS: _____

CALCULATIONS

(3) = (1)-(2); (4) = $\frac{(3)}{\text{Volume of Cylinder}}$; (7) = $\frac{(6)}{(5)}$ (13) = $\frac{(8)-(9)}{(9)-(10)} \times 100$; (14) = $\frac{(4)}{1.0 + \frac{(13)}{100}}$

GPO 849-728

Figure 1. – Soil-lime laboratory compaction test — example.

7-2335 (1-86)
Bureau of Reclamation

Designation USBR 5850-89

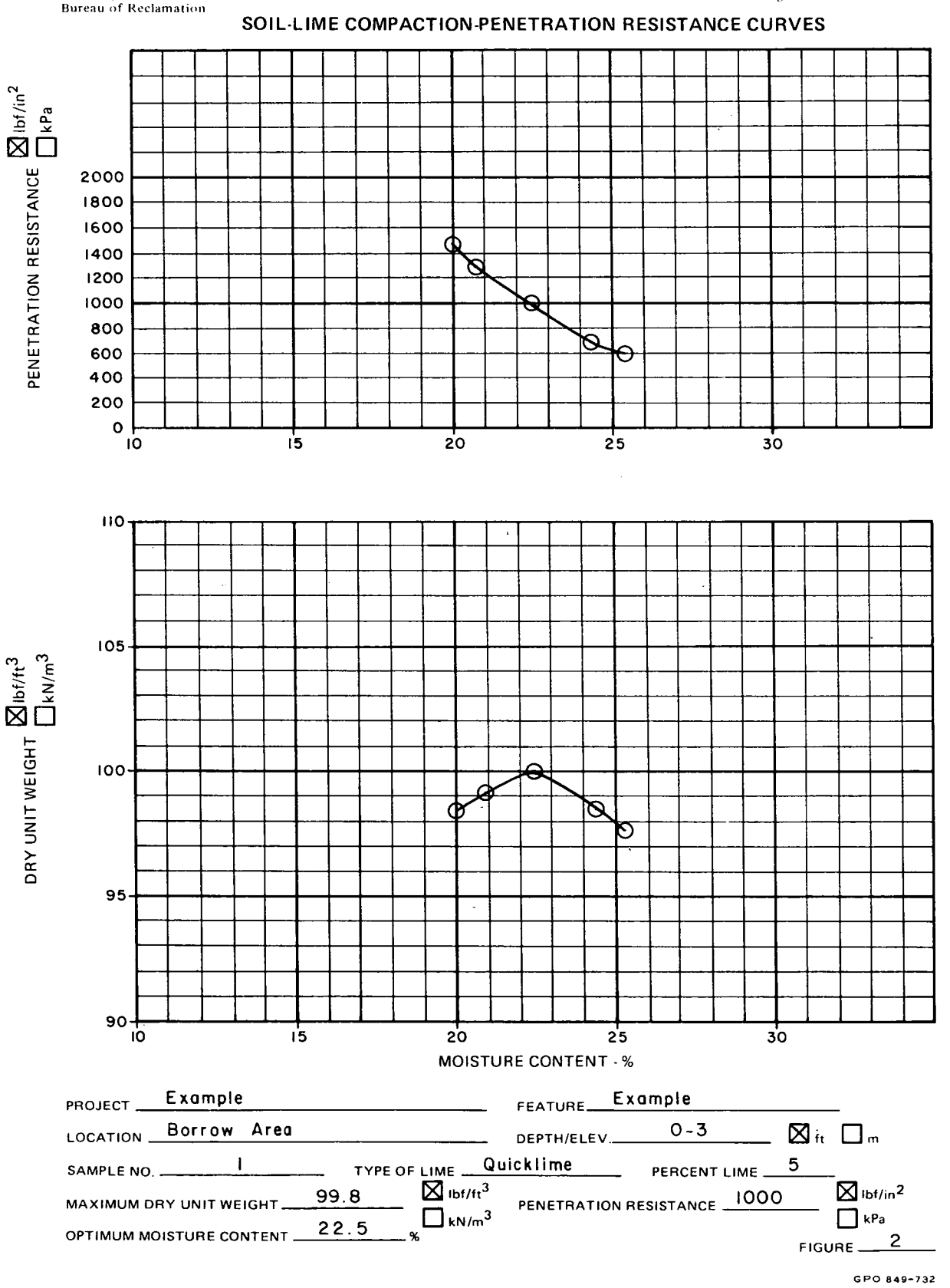

Figure 2. - Soil-lime compaction — penetration resistance curves — example.

UNITED STATES DEPARTMENT OF THE INTERIOR
BUREAU OF RECLAMATION

USBR 5855-89

PROCEDURE FOR

PREPARING SOIL-LIME SPECIMENS FOR COMPRESSION TESTING

INTRODUCTION

This procedure is under the jurisdiction of the Geotechnical Services Branch, code D-3760, Research and Laboratory Services Division, Denver Office, Denver, Colorado. The procedure is issued under the fixed designation USBR 5855. The number immediately following the designation indicates the year of acceptance or the year of last revision. Corresponding forms in SI units are included. The SI forms have the letter "M" following the first digit in the form number.

1. Scope

1.1 This designation outlines the procedure for preparing and curing compacted soil-lime specimens for unconfined compressive strength testing. A 2-inch (51-mm) diameter by 5-inch (127-mm) high split mold is used.

2. Auxiliary Tests

2.1 A test sample must be obtained in accordance with USBR 5205 prior to performing this procedure.

2.2 The moisture content must be determined in accordance with USBR 5300 as part of this procedure.

2.3 The maximum laboratory dry unit weight and optimum moisture content must be determined in accordance with USBR 5850 in order to compact the test specimens at the prescribed percent of the maximum laboratory dry unit weight.

3. Applicable Documents

3.1 *USBR Procedures*:
USBR 1012 Calibrating Balances or Scales
USBR 1020 Calibrating Ovens
USBR 3900 Standard Definitions of Terms and Symbols Relating to Soil Mechanics
USBR 5205 Preparing Soil Samples by Splitting or Quartering
USBR 5720 Performing Unconfined Compressive Strength Testing of Soils
USBR 5850 Performing Laboratory Compaction of Soil-Lime Mixtures
USBR 5875 Determining Soil-Lime pH

4. Summary of Method

4.1 Dependent on design criteria, a minimum of 10 compacted 2-inch diameter by 5-inch high (51- by 127-mm) soil-lime specimens are prepared for each specified lime percentage so unconfined compression testing can be performed at 3, 7, 28, 90, and 360 days after specimen preparation.

4.2 The amount of soil, lime, and water required for placement in a 2-inch diameter by 5-inch high (51- by 127-mm) mold is determined. Soil specimens meeting design requirements for dry unit weight, moisture content, and percent lime added are compacted using a 3/4-inch-diameter (19-mm) tamper. The soil-lime mixture is placed in the mold in 10 layers and each layer is compacted uniformly to a required height.

5. Significance and Use

5.1 Careful preparation of compacted soil-lime specimens for laboratory use is important so that accurate values may be obtained from the unconfined compression tests.

5.2 Laboratory compacted soil-lime specimens having incorrect placement unit weights, moisture contents, and percentage lime added will not be representative of design requirements and may lead to erroneous conclusions based on the laboratory results obtained.

5.3 Compression testing of soil-lime specimens is performed to determine the unconfined compressive strength of the cured soil-lime-water mixture. This is an index property of the strength of the soil-lime-water mixture that may be attained after curing.

6. Terminology

6.1 Definitions are in accordance with USBR 3900.

6.2 Terms not included in USBR 3900 specific to this designation are:

6.2.1 *Hydrated Lime*.–The common name for calcium hydroxide [$Ca(OH)_2$]. It is a complex formed by the bond of water to calcium which initiates hydration.

6.2.2 *Lime Content*.–Specified as a percent of dry mass of soil.

6.2.3 *Quicklime*.–The common name for calcium oxide (CaO).

7. Apparatus

7.1 *General Apparatus*:

7.1.1 *Balance or Scale*.–A typical balance or scale used for preparing the material required for the test specimens

must be readable to 0.01 lbm and have a capacity of about 50 lbm.

7.1.2 *Balance or Scale.*–A typical balance or scale used for preparing each 2- by 5-inch (51- by 127-mm) test specimen must be readable to 0.01 g and have a capacity of about 1000 g.

7.1.3 *Vernier Caliper.*–A caliper, suitable for measuring the physical dimensions of the split mold and specimen to the nearest 0.01 inch (0.25 mm).

7.1.4 *Tamping Rod.*–A 3/4-inch (19-mm) diameter, smooth steel rod about 12 inches (300 mm) long and having one semispherical end.

7.1.5 *Safety Equipment.*–Protective eyewear, respirator, gloves, plastic apron, etc.

7.2 *Sample and Specimen Storage.*–An environmentally controlled humidity room for sample storage with temperature at about 70 °F (21 °C) and relative humidity at approximately 50 percent.

8. Reagents and Materials

8.1 *Hydrated Lime.*–Calcium hydroxide [$Ca(OH)_2$].

8.2 *Quicklime.*–Calcium oxide (CaO).

8.3 Tapwater that is free of acids, alkalies, or oils and is suitable for drinking should be used for wetting the soil.

9. Precautions

9.1 *Safety Precautions*:

9.1.1 This designation may involve hazardous materials, operations, and equipment.

9.1.2 Hydrated lime or quicklime becomes very hot when it chemically combines with water. Appropriate safety equipment, such as gloves, protective eyewear, respirator, and plastic apron should be worn when handling lime.

9.2 *Technical Precautions*:

9.2.1 Computations to determine the mass of quicklime or hydrated lime (calcium hydroxide) are different. See subparagraphs 14.3.1 and 14.3.2 for the applicable computation depending on the type of lime used.

9.2.2 To minimize the effect of lime hydration, perform the compaction as quickly as possible after the 1-hour cure time to minimize additional hydration and unrecorded moisture loss.

9.2.3 When compacting the specimens, tamping should be as uniform and consistent as possible so that each layer is uniformly compacted.

10. Sampling, Test Specimens, and Test Units

10.1 *Sample Preparation*:

10.1.1 Prepare a test sample in accordance with USBR 5205.

10.1.2 Air-dry a mass of minus U.S.A. Standard series No. 4 (4.75-mm) material sufficient for a minimum of 10 compacted specimens for each specified lime content and each prescribed percent of laboratory maximum dry unit weight and moisture content.

10.1.3 After air-drying, thoroughly break up any soil aggregations in such a manner as to avoid reducing the natural size of the material.

10.1.4 Pass the air-dried material through the No. 4 (4.75-mm) sieve.

10.1.5 Thoroughly mix the material passing the No. 4 (4.75-mm) sieve and place in an airtight, moisture-proof container.

10.1.6 This soil, with the addition of lime and water, is used to prepare compacted test specimens as described in the procedure of paragraph 13.

11. Calibration and Standardization

11.1 Verify that equipment is currently calibrated in accordance with the applicable calibration procedure. If the calibration is not current, perform the calibration before using the equipment for this procedure.

11.2 A remolding factor for each split mold is calculated. If this factor is not available, it must be determined before compaction of the soil specimen takes place (see app. X1 for the remolding factor computation) and record on the "Soil-Lime Compression Testing Specimen Placement" form as shown on figure 1A (in-lb) or figure 1B (SI).

12. Conditioning

12.1 Store the lime in a dry place.

12.2 Store the soil in airtight, moisture-proof container (par. 10) until the procedure outlined in paragraph 13 can be performed.

12.3 Allow the soil-water-lime mixture to cure for 1 hour before compacting as prescribed in subparagraph 13.8.

12.4 Cure the test specimens in a humidity controlled environment [minimum 50% relative humidity, 68 °F (20 °C) temperature] for the times specified in subparagraph 4.1.

13. Procedure

13.1 Use the soil as prepared in paragraph 10 to prepare the test specimens. All data are to be recorded on the "Soil-Lime Compression Testing Specimen Placement" form as shown on figure 1A (in-lb) or figure 1B (SI).

13.2 Calculate total quantities of soil, lime, and water required to prepare two test specimens at each prescribed lime content, percent of maximum dry unit weight, and moisture content. The initial moisture content of the soil as determined in USBR 5300 is used to calculate the additional water required to bring the soil-lime mixture to the desired moisture contents. Calculation of soil, lime, and water quantities is outlined in paragraph 14.

13.3 Determine and record the total mass of soil-lime mixture required for one compression test specimen.

13.4 Determine and record the mass of the plastic moisture-proof container into which the soil-lime mixture for each specimen will be placed.

13.5 Add the mass of soil-lime mixture for one compression test specimen (obtained in subpar. 13.3) to the mass of the container obtained in subparagraph 13.4 and record.

13.6 Divide the total mass of soil-lime required for one compression test specimen (from subpar. 13.3) by the number of layers, and record this value. The result yields the mass of soil-lime mixture to be removed from the container for each layer.

13.7 Thoroughly mix the soil, water, and lime for the specimens to ensure homogeneity throughout the specimens.

13.8 Place the soil-lime mixture for each specimen in a container and allow to cure for 1 hour.

13.9 Remove the mass of soil-lime mixture required for one layer, and place it in the split mold. Calculate and record the total mass remaining in the container.

13.10 Spread the material in the split mold into a layer of uniform thickness and compact using a 3/4-inch (19-mm) diameter tamping rod.

13.11 Compact each layer, with uniform tamping rod coverage, until the height of the soil-lime layer is such that the appropriate layer mark on the tamping tool coincides with the top of the split mold.

13.12 Using a knife or similar instrument, scarify the compacted surface to a depth equal to about one-tenth the layer thickness.

13.13 Remove the amount of soil-lime required for the next layer from the container and place it in the split mold. Calculate and record the total mass remaining in the container.

13.14 Rotate the split mold 90 degrees before repeating subparagraphs 13.10 through 13.13.

13.15 Repeat the procedures described in subparagraphs 13.9 through 13.14 until all layers have been compacted.

13.16 Remove the split mold and place the specimen in an airtight container in the 50-percent humidity room for the prescribed cure time prior to compressive strength testing.

13.17 Repeat the procedures described in subparagraphs 13.6 through 13.16 for the companion specimen.

13.18 Repeat the procedures described in subparagraphs 13.2 through 13.17 for specimens required for additional cure days.

14. Calculations

14.1 The remolding factor for each mold is defined by the following equation; sample calculations are outlined in appendix X1.

14.1.1 *Inch-Pound Units*:

$$\text{Remolding factor } F = \frac{(\text{specimen volume, in}^3)\left(\frac{453.6\text{ g}}{1\text{ lbm}}\right)\left(\frac{1\text{ lbm}}{1\text{ lbf}}\right)}{1{,}728\ \frac{\text{in}^3}{\text{ft}^3}} \quad (1)$$

where:

F = remolding factor, ft³·g/lbf)
453.6 = change gram to pound mass
1,728 = change cubic inches to cubic feet
1/1 = change pound mass to pound force

NOTE 1.–For this equation, a 1-pound mass is considered to be numerically equal to a 1-pound force.

14.1.2 *SI Units*:

$$\text{Remolding factor, } F = (\text{specimen volume, mm}^3) \times \left[\frac{1\text{ m}^3}{10^9\ \frac{\text{mm}^3}{\text{m}^3}}\left(\frac{10^3\text{ g}}{1\text{ kg}}\right)\frac{1\text{ kg}}{9.807\text{ N}}\left(\frac{10^3\text{ N}}{1\text{ kN}}\right)\right] \quad (2)$$

where:

F = remolding factor, m³·g/kN
10^9 = change cubic meter to cubic millimeter
10^3 = change kilogram to gram, and change kilonewton to newton
9.807 = change kilogram to newton

14.1.3 *Specimen Volume.*–The volume of the specimen is calculated as follows:

$$\text{Specimen volume, } V = \frac{\pi D^2 h}{4} \quad (3)$$

where:

π = 3.1416
D = inside diameter of mold with a membrane liner, in or mm
h = inside height of mold with a bottom liner, in or mm)

14.2 Calculations to determine the quantity of soil required for preparation of the soil-lime-water mixture to meet requirements for dry unit weight and moisture content are outlined in the following paragraph. The initial moisture content determination of the soil is necessary to determine the mass of lime required which is by dry mass of soil.

14.2.1 *Mass of soil*:

$$m_s = \gamma_d F I (1 + w_I) \quad (4)$$

where:

m_s = mass of soil, g
γ_d = desired dry unit weight of soil, (lbf/ft³ or kN/m³)
F = remolding factor, ft³·g/lbf or m³·g/kN (subpar. 14.1)
I = number of specimens to be prepared
w_I = moisture content of sample in decimal form

14.3 The lime content is specified by percent of dry mass of soil. Two types of lime may be used. (1) quicklime exists in the dry state; its mass is calculated using the equation in subparagraph 14.3.1; and (2) hydrated lime (calcium hydroxide) is a combination of lime and approximately 32 percent water; its mass is calculated using the equation in subparagraph 14.3.2.

14.3.1 *Mass of Quicklime — Calcium Oxide* (CaO):

$$m_{qL} = \gamma_d P_L F I \quad (5)$$

where:

m_{qL} = mass of quicklime, g
γ_d = desired dry unit weight of soil, lbf/ft³ or kN/m³
P_L = percent of quicklime in decimal form
F = remolding factor (ft³·g/lbf or m³·g/kN) (subpar. 14.1)
I = number of specimens to be prepared

14.3.2 *Mass of Hydrated Lime — Calcium Hydroxide* [$Ca(OH)_2$]:

$$m_{hL} = 1.32\ \gamma_d P_L F I \quad (6)$$

where:

m_{hL} = mass of hydrated lime, g
γ_d = desired dry unit weight of soil, lbf/ft³ or kN/m³
P_L = percent of lime in decimal form
F = remolding factor ft³·g/lbf or m³·g/kN (subpar. 14.1)
I = number of specimens to be prepared
1.32 = constant accounts for the amount of water in hydrated lime

14.4 Determine the mass of water.:

14.4.1 *Mass of Water*:

$$m_w = \gamma_d F I\ (w - w_I) \quad (7)$$

where:

m_w = mass of water, g
γ_d = desired dry unit weight of soil, lbf/ft³ or kN/m³
F = remolding factor ft³·g/lbf or m³·g/kN (subpar. 14.1)
I = number of specimens to be prepared
w = desired moisture content in decimal form
w_I = moisture content of sample in decimal form

14.5 Determine the material mass for each compacted layer.

$$m = \frac{m_s + G + m_w}{N I} \quad (8)$$

where:

m = mass of total material for one layer, g
m_s = mass of soil, g
G = mass of lime, g (for quicklime use m_{qL} from subpar. 14.3.1; for hydrated lime use m_{hL} par. 14.3.2)
m_w = mass of water, g
N = number of layers to be compacted
I = number of specimens to be prepared (use the same as in subpar. 14.2 through 14.5)

15. Report

15.1 The report is to consist of the completed and checked "Soil-Lime Compression Testing Specimen Placement" form (fig. 1A or fig. 1B).

15.2 All calculations are to show a checkmark.

7-2340 (4-86) Bureau of Reclamation	SOIL-LIME COMPRESSION TESTING SPECIMEN PLACEMENT	Designation USBR 5855-89

PROJECT Example FEATURE Example

LOCATION Borrow Area DEPTH/ELEV 0 - 10.0 ft

SAMPLE NO. 1 TESTED BY _____ DATE _____

COMPUTED BY _____ DATE _____ CHECKED BY _____ DATE _____

INITIAL PLACEMENT REQUIREMENTS

TYPE OF LIME Quicklime

LIME CONVERSION FACTOR

☒ QUICKLIME = 1.00 ☐ HYDRATED LIME = 1.32

1. CONVERSION FACTOR TO BE USED		1.00
2. PERCENT LIME	%	5.0
3. SOIL-LIME LABORATORY MAXIMUM DRY UNIT WEIGHT	lbf/ft^3	101.8
4. REQUIRED PERCENT LABORATORY MAXIMUM DRY UNIT WEIGHT	%	98
5. SOIL-LIME PLACEMENT DRY UNIT WEIGHT= (3) X $\frac{(4)}{100}$	lbf/ft^3	99.8
6. SOIL-LIME OPTIMUM MOISTURE CONTENT	%	24.5
7. REQUIRED PERCENTAGE POINTS WET (+) OR DRY (–) OF OPTIMUM	%	-2.0
8. SOIL-LIME PLACEMENT MOISTURE CONTENT= (6) + (7)	%	22.5
9. MOLD REMOLDING FACTOR	$g•ft^3/lbf$	4.146
10. NUMBER OF PLACEMENT SPECIMENS		2
INITIAL SOIL MOISTURE CONTENT		
DISH NUMBER		146
11. MASS OF DISH + WET SOIL	g	344.2
12. MASS OF DISH + DRY SOIL	g	324.7
13. MASS OF DISH	g	165.8
14. MASS OF WATER	g	19.5
15. MASS OF DRY SOIL	g	158.9
16. MOISTURE CONTENT	%	12.3
MATERIAL QUANTITIES		
17. SOIL, TOTAL MASS REQUIRED= (5) x (9) x (10) x (1.0 + $\frac{(16)}{100}$)	g	929.3
18. LIME, TOTAL MASS REQUIRED= (1) x $\frac{(2)}{100}$ x (5) x (9) x (10)	g	41.4
19. WATER, TOTAL MASS REQUIRED = (5) x (9) x (10) x ($\frac{(8)}{100}$ - $\frac{(16)}{100}$)	g	84.4
20. TOTAL SAMPLE MASS= (17) + (18) + (19)	g	1055.1

Figure 1A. – Soil-lime compression testing specimen placement (in-lb example).

SPECIMEN COMPACTION DATA			
10.	NUMBER OF PLACEMENT SPECIMENS = (10)		2
20.	TOTAL SAMPLE MASS = (20)	g	1055.1
21.	MASS PER SPECIMEN = (20)/(10)	g	527.6
22.	MASS PER LAYER = (21)/10	g	52.76
23.	MASS OF CONTAINER	g	235.0
24.	HEIGHT OF MOLD	in	5.007
25.	THICKNESS OF EACH LAYER = (24)/10	in	0.50

LAYER REQUIREMENTS		
LAYER NUMBER	MASS RETAINED IN CONTAINER (21) + (23) - (22) x LAYER NO. g	DEPTH FROM TOP OF MOLD (24) - (25) x LAYER NO. in
1	709.8	4.5
2	657.1	4.0
3	604.3	3.5
4	551.6	3.0
5	498.8	2.5
6	446.0	2.0
7	393.3	1.5
8	340.5	1.0
9	287.8	0.5
10	235.0	0.0

GPO 850-596

Figure 1A. – Soil-lime compression testing specimen placement (in-lb example) — Continued.

7m-2340 (4-86) Bureau of Reclamation	SOIL-LIME COMPRESSION TESTING SPECIMEN PLACEMENT	Designation USBR 5855-89

PROJECT Example FEATURE Example

LOCATION Borrow Area DEPTH/ELEV 0.0 - 3.0 m

SAMPLE NO. 1 TESTED BY _____ DATE _____

COMPUTED BY _____ DATE _____ CHECKED BY _____ DATE _____

INITIAL PLACEMENT REQUIREMENTS

TYPE OF LIME Quicklime

LIME CONVERSION FACTOR

☒ QUICKLIME = 1.00 ☐ HYDRATED LIME = 1.32

1. CONVERSION FACTOR TO BE USED		1.00
2. PERCENT LIME	%	5.0
3. SOIL-LIME LABORATORY MAXIMUM DRY UNIT WEIGHT	kN/m^3	16.30
4. REQUIRED PERCENT LABORATORY MAXIMUM DRY UNIT WEIGHT	%	98
5. SOIL-LIME PLACEMENT DRY UNIT WEIGHT = (3) X $\frac{(4)}{100}$	kN/m^3	15.97
6. SOIL-LIME OPTIMUM MOISTURE CONTENT	%	24.5
7. REQUIRED PERCENTAGE POINTS WET (+) OR DRY (−) OF OPTIMUM	%	-2.0
8. SOIL-LIME PLACEMENT MOISTURE CONTENT = (6) + (7)	%	22.5
9. MOLD REMOLDING FACTOR	gem^3/kN	26.3
10. NUMBER OF PLACEMENT SPECIMENS		2
INITIAL SOIL MOISTURE CONTENT		
DISH NUMBER		146
11. MASS OF DISH + WET SOIL	g	344.2
12. MASS OF DISH + DRY SOIL	g	324.7
13. MASS OF DISH	g	165.8
14. MASS OF WATER	g	19.5
15. MASS OF DRY SOIL	g	158.9
16. MOISTURE CONTENT	%	12.3
MATERIAL QUANTITIES		
17. SOIL, TOTAL MASS REQUIRED = (5) x (9) x (10) x (1.0 + $\frac{(16)}{100}$)	g	943.3
18. LIME, TOTAL MASS REQUIRED = (1) x $\frac{(2)}{100}$ x (5) x (9) x (10)	g	42.0
19. WATER, TOTAL MASS REQUIRED = (5) x (9) x (10) x ($\frac{(8)}{100} - \frac{(16)}{100}$)	g	85.7
20. TOTAL SAMPLE MASS = (17) + (18) + (19)	g	1071.0

Figure 1B. – Soil-lime compression testing specimen placement (SI example).

SPECIMEN COMPACTION DATA			
10.	NUMBER OF PLACEMENT SPECIMENS = (10)		2
20.	TOTAL SAMPLE MASS = (20)	g	1071.0
21.	MASS PER SPECIMEN = (20)/(10)	g	535.5
22.	MASS PER LAYER = (21)/10	g	53.55
23.	MASS OF CONTAINER	g	235.1
24.	HEIGHT OF MOLD	mm	126.7
25.	THICKNESS OF EACH LAYER = (24)/10	mm	12.7

LAYER REQUIREMENTS		
LAYER NUMBER	MASS RETAINED IN CONTAINER (21) + (23) − (22) x LAYER NO. g	DEPTH FROM TOP OF MOLD (24) − (25) x LAYER NO. mm
1	717.1	114
2	663.5	101
3	610.0	89
4	556.4	76
5	502.9	63
6	449.3	51
7	395.8	38
8	342.2	25
9	288.7	12
10	235.1	0

GPO 850-597

Figure 1B. – Soil-lime compression testing specimen placement (SI example) — Continued.

APPENDIX

X1. REMOLDING FACTOR

X1.1 Scope

X1.1.1 This appendix outlines the procedure for calculating the remolding factor for determining the mass (in grams) of soil, lime, and water to prepare a compacted specimen of a given volume at a required dry unit weight. Material is compacted in a split mold containing a cylindrical membrane to ensure uniform specimen surface area and bottom liner to ensure a smooth surface area that is perpendicular to the longitudinal axis of the specimen. Volume determinations take into account the inside diameter of the split mold, the annular volume of the membrane liner, and the volume of the bottom liner.

X1.2 Remold Factor Example Computations

X1.2.1 *Inch-Pound Units*:

Average inside diameter of mold ..... 2.014 in
Average inside height of mold ..... 5.017 in
Average thickness of membrane liner .... 0.005 in
Average thickness of bottom liner ..... 0.010 in

Specimen diameter = inside diameter of mold − membrane liner

= 2.014 − 2 (0.005) = 2.004 inches

Specimen height = inside height of mold − bottom liner

= 5.017 − 0.010 = 5.007 inches

$$\text{Specimen volume} = \frac{\pi\,(\text{diameter})^2\,\text{height}}{4}$$

$$= \frac{3.1416\,(2.004)^2\,5.007}{4} = 15.793\ \text{in}^3$$

The remolding factor is calculated to determine the quantity of material to meet placement dry unit weight requirement.

$$F = \frac{(\text{specimen volume})(\text{g/lbm conversion})(\text{lbm to lbf conversion})}{\text{cubic inches per cubic foot conversion}}$$

$$F = \frac{15.793\,(453.6)\,1}{1{,}728} = 4.146\ \frac{\text{ft}^3\cdot\text{g}}{\text{lbf}}$$

X1.2.2 *SI Units*:

Average inside diameter of mold ..... 51.2 mm
Average inside height of mold ..... 127.0 mm
Average thickness of membrane liner ..... 0.127 mm
Average thickness of bottom liner ..... 0.254 mm

Specimen diameter = inside diameter of mold − membrane liner

= 51.2 − 2 (0.127) = 50.9 mm

Specimen height = inside height of mold − bottom liner

= 127.0 − 0.254 = 126.7 mm

$$\text{Specimen volume} = \frac{\pi\,(\text{diameter})^2\,\text{height}}{4}$$

$$= \frac{33.1416\,(50.9)^2\,126.7}{4} = 258\,000\ \text{mm}^3$$

The remolding factor is calculated to determine quantity of material to meet placement dry unit weight requirement.

$$F = \frac{\text{specimen volume}}{\text{kN/m}^3\text{ to g/mm}^3\text{ conversion}}$$

$$F = \frac{258\,000}{9807} = 26.3\ \text{m}^3\cdot\text{g/kN}$$

UNITED STATES DEPARTMENT OF THE INTERIOR
BUREAU OF RECLAMATION

USBR 5860-89

PROCEDURE FOR

PERFORMING COMPRESSIVE STRENGTH TESTING OF COMPACTED SOIL-LIME MIX

INTRODUCTION

This procedure is under the jurisdiction of the Geotechnical Services Branch, code D-3760, Research and Laboratory Services Division, Denver Office, Denver, Colorado. The procedure is issued under the fixed designation USBR 5860. The number immediately following the designation indicates the year of acceptance or the year of last revision.

This procedure is similar to USBR 5720 and ASTM D 2166, except that this procedure contains a rewritten and more detailed description and includes soil-lime applications. Corresponding forms in SI units are included. The SI forms have the letter M following the first digit in the form number.

1. Scope

1.1 This designation outlines the procedure for performing compressive strength testing of soil-lime mixes, using either compacted or cored cylinders as test specimens.

2. Auxiliary Tests

2.1 The compacted soil-lime cylinders must be prepared in accordance with USBR 5855. The cored soil-lime cylinders must be obtained in accordance with USBR 5870.

3. Applicable Documents

3.1 *USBR Procedures*:
USBR 1007 Calibrating Dial Indicators
USBR 1008 Calibrating Linear Variable Differential Transformers
USBR 1012 Calibrating Balances or Scales
USBR 1040 Calibrating Pressure Gauges
USBR 1045 Calibrating Force Transducers (Load Cells)
USBR *1104 Load Verification of Testing Machines
USBR 3000 Using Significant Digits in Calculating and Reporting Laboratory Data
USBR 3900 Standard Definitions of Terms and Symbols Relating to Soil Mechanics
USBR 5370 Determining Unit Weight of Cylindrical Soil Specimens
USBR 5720 Performing Unconfined Compressive Strength Testing of Soils
USBR 5850 Performing Laboratory Compaction of Soil-Lime Mixtures
USBR 5855 Preparing Soil-Lime Specimens for Compression Testing
USBR 5870 Performing Record Coring and Cross Sectioning of Compacted Soil-Lime
USBR 5875 Determining Soil-Lime pH

* *Concrete Manual*, Bureau of Reclamation, part 2, in press.

3.2 *ASTM Standard*:
D 2166 Unconfined Compressive Strength of Cohesive Soil

4. Summary of Method

4.1 Soil-lime cylinders are loaded in compression to failure, and maximum load is used to calculate the compressive strength. Compressive strength tests are conducted on laboratory-compacted specimens that have been cured for 3, 7, 28, 90, and 360 days. Tests are also conducted on field-cored specimens at 7, 28, 90, and 360 days, and thereafter as appropriate.

5. Significance and Use

5.1 Soil-lime compression testing is performed to determine the compressive strength of compacted soil-lime mixtures.

5.2 Laboratory-compacted soil-lime specimens are tested to determine the minimum lime content to be specified for a soil-lime structure.

5.3 The unconfined compressive strength is the maximum compressive stress and is taken as the maximum load attained per unit area or the load per unit area at 15 percent axial strain, whichever occurs first during performance of the test.

6. Terminology

6.1 Definitions are in accordance with USBR 3900. Terms of particular significance are:

6.1.1 *Compressive strength.*–The load per unit area at which an unconfined cylindrical specimen of soil or rock will fail in a simple compression test. Commonly, the failure load is the maximum that the specimen can withstand in the test (ASTM definition).

6.1.2 *Strength* (unconfined compressive strength).–The maximum stress which a material can resist without

failing for any given type of loading (International Society for Rock Mechanics definition).

6.2 A term not included in USBR 3900 specific to this designation is:

6.2.1 *Lime Content.*–Lime content specified by percent of dry mass of soil.

7. Apparatus

7.1 *General Apparatus*:

7.1.1 *Balance or Scale*:

7.1.1.1 *Balance or Scale.*–A typical balance or scale used for testing 2- by 5-inch (51- by 127-mm) specimens must be readable to 0.1 g and have a capacity of 1000 g.

7.1.1.2 *Balance or Scale.*–A typical balance or scale used for testing 4- by 8-inch (102- by 203-mm) specimens must be readable to 1 g and have a capacity of 4000 g.

7.1.2 *Timer.*–A timer, generally a stopwatch, indicating the elapsed time to the nearest second, for establishing the rate of strain application.

7.1.3 *Vernier Caliper.*–A caliper, suitable for measuring the physical dimensions of the specimen to the nearest 0.01 inch (0.25 mm).

7.2 *Equipment Unique to This Procedure*:

7.2.1 *Compression Device.*–The compression device (loading frame) may be any device with sufficient capacity to provide the rate of loading prescribed in paragraph 12. When the compression device is set to advance at a specified rate, the actual rate should not deviate by more than ±10 percent from the required value. Vibration from the compression device should be minimal.

7.2.2 *Deformation Indicator.*–The deformation indicator may be either a dial indicator or an electronic device. It is to be graduated (readable) to 0.01 inch (0.3 mm) and have a travel range of at least 20 percent of the length of the test specimen.

7.2.3 *Load Indicator.*–The load indicator may be either an electronic load cell or a proving ring, and may be part of the compression device. For soil-lime specimens with compressive strength less than 15 lbf/in² (103 kPa), the load indicator should be of such sensitivity that the applied stress can be calculated to ±0.1 lbf/in² (0.7 kPa). For soil-lime specimens with compressive strength of 15 lbf/in² (103 kPa) or greater, the load indicator should be of such sensitivity that the applied stress can be calculated to ±0.7 lbf/in² (5 kPa).

8. Precautions

8.1 *Safety Precautions.*–This standard may involve hazardous materials, operations, and equipment.

8.2 *Technical Precautions.*–The soil-lime test specimens are to be tested at the end of the cure times prescribed in paragraph 4.

9. Sampling, Test Specimens, and Test Units

9.1 *Specimen Size*:

9.1.1 The compacted soil-lime test specimen is to have a minimum diameter of 2.0 inches (50.8 mm).

9.1.2 The cored soil-lime test specimen is to have a minimum diameter of 3.0 inches (76.2 mm).

9.1.3 The test specimen L/D (length-to-diameter) ratio is to be between 2 and 3.

9.1.4 Measure the length and diameter of the specimen to the nearest 0.01 inch (0.3 mm) using a vernier caliper or other suitable device.

9.1.5 In instances where test specimens do not meet the minimum requirements of subparagraphs 9.1.1, 9.1.2, and 9.1.3, a note indicating this information is to be included in the test data report.

9.2 *Compacted Specimens*:

9.2.1 Prepare compacted test specimens in accordance with USBR 5855.

9.2.2 Handle specimens carefully to prevent disturbance and changes in cross section or loss of moisture.

9.3 *Cored Specimens*:

9.3.1 Obtain cored test specimens in accordance with USBR 5870.

9.3.2 Cut the test specimens to an L/D ratio of 2:1 (note 1). Cut the ends of the specimen perpendicular to the longitudinal axis of the core.

NOTE 1.–It is not critical that the L/D ratio be precisely 2:1. Ratios between 2:1 and 3:1 may be used with expected variance in compressive strength of less than 5 percent from the value of a 2:1 specimen.

10. Calibration and Standardization

10.1 Verify that equipment is currently calibrated in accordance with the applicable calibration procedure. If the calibration is not current, perform the calibration before using the equipment for this procedure.

USBR 1007 Calibrating Dial Indicators
USBR 1008 Calibrating Linear Variable Differential Transformers
USBR 1012 Calibrating Balances or Scales
USBR 1040 Calibrating Pressure Gauges
USBR 1045 Calibrating Force Transducers (Load Cells)

11. Conditioning

11.1 *Equipment.*–Warm up all electronic equipment a minimum of 30 minutes prior to use to ensure stability.

11.2 *Compacted Test Specimens.*–Cure compacted test specimens in accordance with the procedure described in USBR 5855.

11.3 *Cored Test Specimens.*–During the period from the time of coring to the time of preparing specimens for compressive strength testing, protect the specimens from moisture loss and from temperature variations of such magnitude as to be harmful to the specimen.

12. Procedure

12.1 All data are to be recorded on the "Soil-Lime Unconfined Compressive Strength Test" form as shown on figure 1A (in-lb units) or figure 1B (SI units).

12.2 Place the specimen in the loading device so that it is centered on the bottom platen.

12.3 Carefully adjust the loading device so that the upper platen just makes contact with the specimen.

12.4 Record the initial reading of the load indicator and the deformation indicator.

12.5 Strain the specimen at a rate of approximately 0.25 in/min (6 mm/min).

12.6 Record load readings every 0.01 inch (0.3 mm) for the first 3-percent strain and 0.02 inch (0.5 mm) for the balance of the test. Always attempt to record the maximum load carried by the specimen.

12.7 Continue loading the test specimen until several readings have been taken beyond the point where the load begins to decrease with increasing strain, or until 15 percent strain is reached.

12.8 Take a photo of the test specimen after failure showing the angle of the plane of failure when possible.

12.9 Measure and record the diameter of the failed specimen at its central height.

12.10 Compute the compressive stress and axial strain for all load readings.

12.11 Make a plot showing the relationship between compressive stress and axial strain as shown on figure 2A (inch-pound) or figure 2B (SI).

13. Calculations

13.1 Calculate the strain of the test specimen.

$$e = \frac{100}{H_o} (\Delta H) \quad (1)$$

where:

e = axial strain, %
ΔH = change in length of specimen during testing, in or mm
H_o = initial length of specimen, in or mm
100 = converts from decimal to percent

13.2 Calculate the average cross-sectional area of the test specimen:

13.2.1 If radial deformation was not observed during testing, correction of cross-sectional area need not be made (fig. 1A).

13.2.2 If radial deformation increased during the test, but the specimen maintained a cylindrical shape (assuming that the volume of the specimen also did not change, fig. 1A), the corrected average cross-sectional area of the specimen is calculated using the equation:

$$A_c = \frac{A_o}{1 - e} \quad (2)$$

where:

A_c = average corrected cross-sectional area of a specimen, in^2 or cm^2
A_o = initial cross-sectional area of a specimen in units identical to those used with A_c
e = axial strain expressed as a decimal

13.2.3 If radial deformation increased during the test and the specimen assumed a barrel shape (fig. 1A), the average corrected cross-sectional area is calculated using the equation:

$$A_c = \frac{A_o}{1 - 0.6\, e} \quad (3)$$

where 0.6 equals correction factor for barrel shape radial deformation.

13.3 Calculate the compressive stress applied to the test specimen:

$$s = \frac{P}{A_c} \quad (4)$$

where:

s = compressive stress, lbf/in^2
P = axial load applied to a specimen, lbf
A_c = corrected cross-sectional area of a specimen, in^2

13.4 *SI Units*:

$$s = \frac{P}{A_c} \quad (5)$$

where:

s = compressive stress, kPa
P = axial load applied to a specimen, kN
A_c = corrected average cross-sectional area of a specimen, mm^2

14. Interpretation of Results

14.1 Compressive strength of the test specimen is reported as the maximum compressive stress or the compressive stress at 15 percent strain, whichever occurs first.

15. Report

15.1 The report is to consist of the following completed and checked form and plot:

"Soil-Lime Unconfined Compressive Strength Test" (fig. 1A or 2B).

"Soil-Lime Unconfined Compressive Strength Test Plot" (fig. 2A or 2B).

15.2 All calculations are to show a checkmark and all plotting should be checked.

7-2392 (12-86) Bureau of Reclamation	SOIL-LIME UNCONFINED COMPRESSIVE STRENGTH TEST	Designation USBR 5860-89

SAMPLE NO.	PROJECT	FEATURE
1	Example	Example
SPECIMEN NO.	**LOCATION**	**DEPTH/ELEV.**
1	Borrow Area	0 - 10.0 (ft)
TYPE OF LIME	**PERCENT LIME**	**CURE TIME**
Quicklime	5	3 (DAYS)

SPECIMEN TYPE: UNDISTURBED ☐ COMPACTED ☒

TESTED BY	DATE	COMPUTED BY	DATE	CHECKED BY	DATE

(1)	SPECIMEN LENGTH, Ho (in)	5.00	LOAD CELL NO.		20B
(2)	SPECIMEN DIAMETER, Do (in)	2.00	(10) LOAD CONVERSION (lbf/V)		1.0
(3)	SPECIMEN AREA = $\frac{3.1416\,(2)^2}{4}$ = Ao (in^2)	3.14	STRAIN RATE (in/min)		0.02
(4)	SPECIMEN VOLUME = (1) x (3) (in^3)	15.7			
(5)	MASS OF SPECIMEN + CONTAINER (g)	709.4			
(6)	MASS OF CONTAINER (g)	181.3			
(7)	MASS OF SPECIMEN = (5) - (6) (g)	528.1			
(8)	UNIT WEIGHT $\frac{(7)}{(4)} \times \frac{1728}{453.6}$ (lbf/ft^3)	128			
	LVDT NO.	15B			
(9)	AXIAL MOVEMENT CONVERSION (in/V)	1.0			

*AREA CALCULATION (from back side)

☒ CYLINDRICAL SHAPE, $A_c = \frac{Ao}{1-\epsilon} = \frac{(3)}{1-(14)/100^{(in^2)}}$

☐ BARREL SHAPE, $A_c = \frac{Ao}{1-.6\epsilon} = \frac{(3)}{1-.6(14)/100^{(in^2)}}$

☐ NO CARRECTION, Ac = Ao

READING NUMBER	AXIAL MOVEMENT READING (volts) (11)	AXIAL MOVEMENT (in) (12)=(9)x(11)	ΔH (in) (13)=(12)-(12)$_i$	AXIAL STRAIN ε - (%) (14)=$\frac{(13)}{(1)}$x100	CORRECTED AREA* (in^2) Ac (15)	LOAD READING (volts) (16)	LOAD lbf (17)=(10)x(16)	COMPRESSIVE STRENGTH lbf/in^2 (18)=$\frac{(17)}{(15)}$
1 (I)	0.32	0.32	0.00	0.00	3.14	0.0	0.0	0.0
2	0.33	0.33	0.01	0.20	3.15	134.1	134.1	42.6
3	0.34	0.34	0.02	0.40	3.15	211.3	211.3	67.1
4	0.35	0.35	0.03	0.60	3.16	279.4	279.4	88.4
5	0.36	0.36	0.04	0.80	3.17	329.4	329.4	104
6	0.37	0.37	0.05	1.00	3.17	380.8	380.8	120
7	0.38	0.38	0.06	1.20	3.18	418.4	418.4	132
8	0.39	0.39	0.07	1.40	3.18	453.7	453.7	143
9	0.40	0.40	0.08	1.60	3.19	484.0	484.0	152
10	0.41	0.41	0.09	1.80	3.20	499.4	499.4	156
11	0.42	0.42	0.10	2.00	3.20	512.9	512.9	160
12	0.43	0.43	0.11	2.20	3.21	533.6	533.6	163
13	0.44	0.44	0.12	2.40	3.22	527.9	527.9	164
14	0.45	0.45	0.13	2.60	3.22	528.8	528.8	164
15	0.46	0.46	0.14	2.80	3.23	523.6	523.6	162
16	0.47	0.47	0.15	3.00	3.24	518.2	518.2	160
17	0.49	0.49	0.17	3.40	3.25	504.1	504.1	155
18	0.51	0.51	0.19	3.80	3.26	491.2	491.2	151
19	0.53	0.53	0.21	4.20	3.28	477.5	477.5	146
20	0.55	0.55	0.23	4.60	3.29	462.7	462.7	141
21	0.57	0.57	0.25	5.00	3.31	443.1	443.1	134
22	0.59	0.59	0.27	5.40	3.32	427.1	427.1	129
23	0.61	0.61	0.29	5.80	3.33	406.9	406.9	122
24	0.63	0.63	0.31	6.20	3.35	385.7	385.7	115
25								

Figure 1A. - Soil-lime unconfined compressive strength test (in-lb example).

AREA CORRECTION DETERMINATION

(2) D_o = 2.00 in

(19) D AT END OF TEST = 2.06 in

(20) € AT END OF TEST = 6.20

(21) $\frac{D_o^2}{D^2} = \frac{(2)^2}{(19)^2} = \frac{(2.00)^2}{(2.06)^2} = 0.94$

(22) $1 - \frac{€}{100} = 1 - \frac{(20)}{100} = 1 - \frac{6.20}{100} = 0.94$

IF
(21) = (22)
USE
$A_c = \frac{Ao}{1-€}$

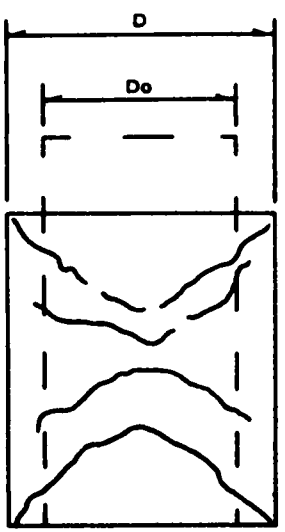

CYLINDRICAL SHAPE FAILURE

IF
(21) GREATER THAN (22)
USE
$A_c = \frac{Ao}{1-.6€}$

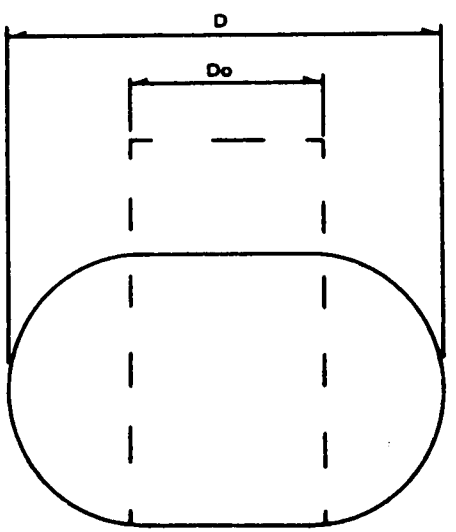

BARREL SHAPE FAILURE

IF
(21) = 1.0
USE NO CORRECTION
Ac = Ao

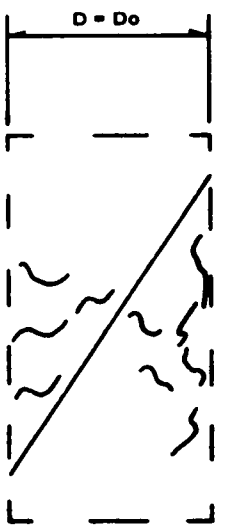

BRITTLE FAILURE

Figure 1A. - Area correction determination (back of form) — example — Continued.

7m-2392 (12-86) Bureau of Reclamation	SOIL-LIME UNCONFINED COMPRESSIVE STRENGTH TEST	Designation USBR 5860-89

SAMPLE NO.	PROJECT	FEATURE
1	Example	Example
SPECIMEN NO.	**LOCATION**	**DEPTH/ELEV.**
1	Borrow Area	0.0 — 3.0 (m)
TYPE OF LIME	**PERCENT LIME**	**CURE TIME**
Quicklime	5	3 (DAYS)

SPECIMEN TYPE: UNDISTURBED ☐ COMPACTED ☒

TESTED BY	DATE	COMPUTED BY	DATE	CHECKED BY	DATE

(1)	SPECIMEN LENGTH, Ho	(mm)	127.0
(2)	SPECIMEN DIAMETER, Do	(mm)	51.0
(3)	SPECIMEN AREA = $\frac{3.1416\ (2)^2}{4}$ = Ao	(mm^2)	2042.8
(4)	SPECIMEN VOLUME = $\frac{(1) \times (3)}{1000}$	(cm^3)	259.4
(5)	MASS OF SPECIMEN + CONTAINER	(g)	709.4
(6)	MASS OF CONTAINER	(g)	181.3
(7)	MASS OF SPECIMEN = (5) - (6)	(g)	528.1
(8)	UNIT WEIGHT $\frac{(7)}{(4)}$ x 9.807	(KN/m^3)	20.0
	LVDT NO.		15 M
(9)	AXIAL MOVEMENT CONVERSION	(mm/V)	1.0

LOAD CELL NO.		20M
(10) LOAD CONVERSION	(KN/V)	1000000
STRAIN RATE	(mm/min)	0.05

*AREA CALCULATION (from back side)

☒ CYLINDRICAL SHAPE, $A_c = \frac{Ao}{1-\epsilon} = \frac{(3)}{1-(14)/100(mm^2)}$

☐ BARREL SHAPE, $A_c = \frac{Ao}{1.6\epsilon} = \frac{(3)}{1-.6(14)/100(mm^2)}$

☐ NO CORRECTION, Ac = Ao

READING NUMBER	AXIAL MOVEMENT READING (volts) (11)	AXIAL MOVEMENT (mm) (12)=(9)x(11)	ΔH (mm) (13)=(12)-(12)$_I$	AXIAL STRAIN ϵ - (%) (14)=$\frac{(13)}{(1)}$x100	CORRECTED AREA* (mm^2) A_c (15)	LOAD READING (volts) (16)	LOAD KN (17)=(10)x(16)	COMPRESSIVE STRENGTH (kPa) (18) = $\frac{(17)}{(15)}$
1 (I)	8.0	8.0	0.0	0.0	2042.8	0.0	0.0	0.0
2	8.5	8.5	0.5	0.39	2050.8	0.60	600000	293
3	9.0	9.0	1.0	0.79	2059.1	1.24	1240000	602
4	9.5	9.5	1.5	1.18	2067.2	1.69	1690000	818
5	10.0	10.0	2.0	1.57	2075.4	2.02	2020000	973
6	10.5	10.5	2.5	1.97	2083.9	2.22	2220000	1065
7	11.0	11.0	3.0	2.36	2092.2	2.33	2330000	1114
8	11.5	11.5	3.5	2.76	2100.8	2.35	2350000	1119
9	12.0	12.0	4.0	3.15	2109.2	2.31	2310000	1095
10	12.5	12.5	4.5	3.54	2117.8	2.24	2440000	1058
11	13.0	13.0	5.0	3.94	2126.8	2.18	2180000	1025
12	13.5	13.5	5.5	4.33	2135.3	2.12	2120000	993
13	14.0	14.0	6.0	4.72	2144.0	2.06	2060000	961
14	14.5	14.5	6.5	5.12	2153.0	1.97	1970000	915
15	15.0	15.0	7.0	5.51	2161.9	1.90	1900000	879
16	15.5	15.5	7.5	5.91	2171.1	1.81	1810000	834
17	16.0	16.0	8.0	6.30	2180.1	1.72	1720000	789
18								
19								
20								
21								
22								
23								
24								
25								

Figure 1B. - Soil-lime unconfined compressive strength test (SI example).

7-2393 (12-86) Bureau of Reclamation	SOIL-LIME UNCONFINED COMPRESSIVE STRENGTH TEST PLOT	Designation USBR 5860-89
SAMPLE NO. 1	PROJECT Example	FEATURE Example
SPECIMEN NO. 1	TYPE OF LIME Quicklime	PERCENT LIME 5
CURE TIME (DAYS) 5	SPECIMEN TYPE: UNDISTURBED ☐	COMPACTED ☒
TESTED BY DATE	COMPUTED BY DATE	CHECKED BY DATE

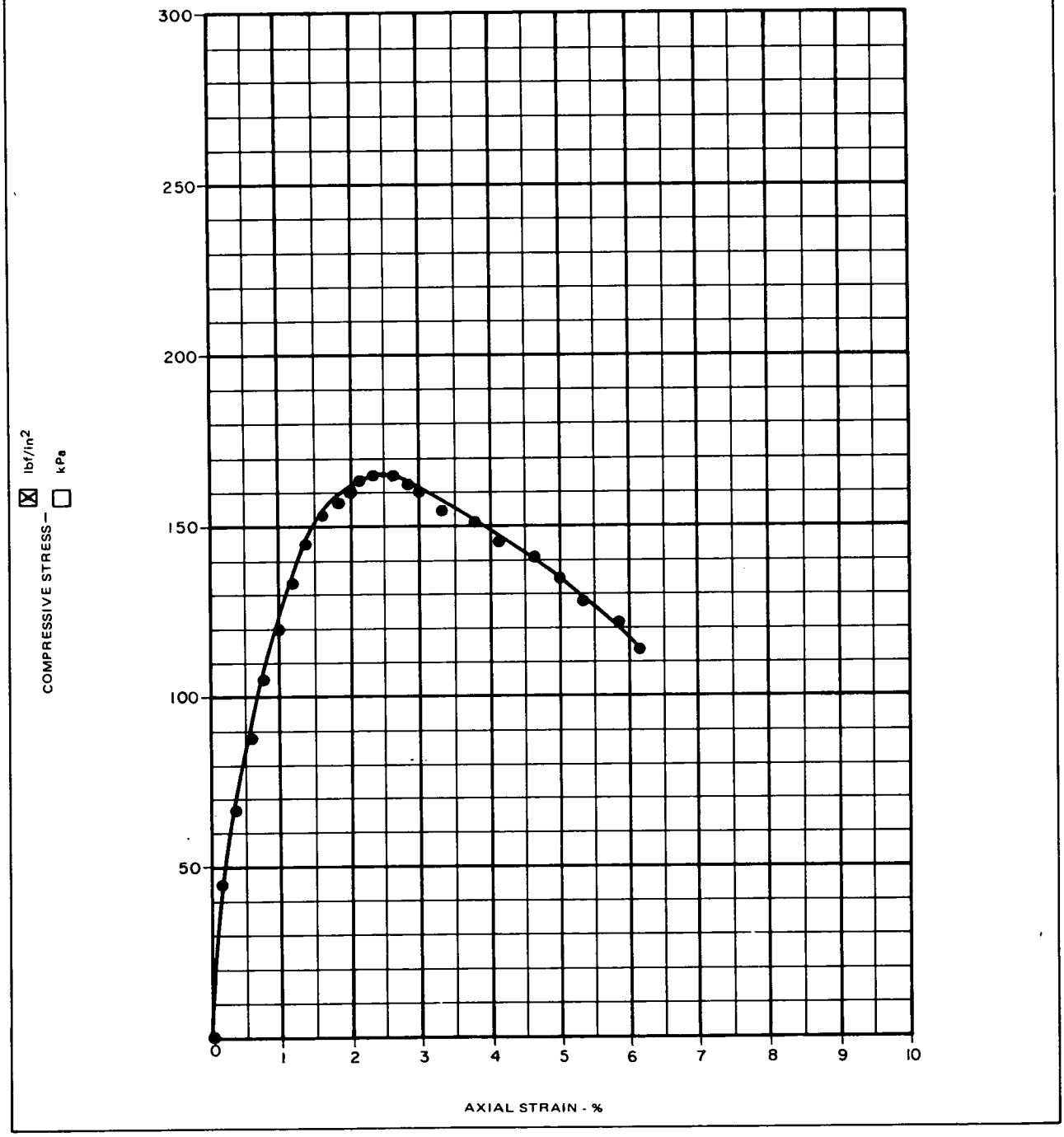

Figure 2A. - Soil-lime unconfined compressive strength test plot (in-lb example).

7-2393 (12-86) Bureau of Reclamation	SOIL-LIME UNCONFINED COMPRESSIVE STRENGTH TEST PLOT	Designation USBR 5860-89
SAMPLE NO. 1	PROJECT Example	FEATURE Example
SPECIMEN NO. 1	TYPE OF LIME Quicklime	PERCENT LIME 5
CURE TIME (DAYS) 3	SPECIMEN TYPE: UNDISTURBED ☐ COMPACTED ☒	
TESTED BY DATE	COMPUTED BY DATE	CHECKED BY DATE

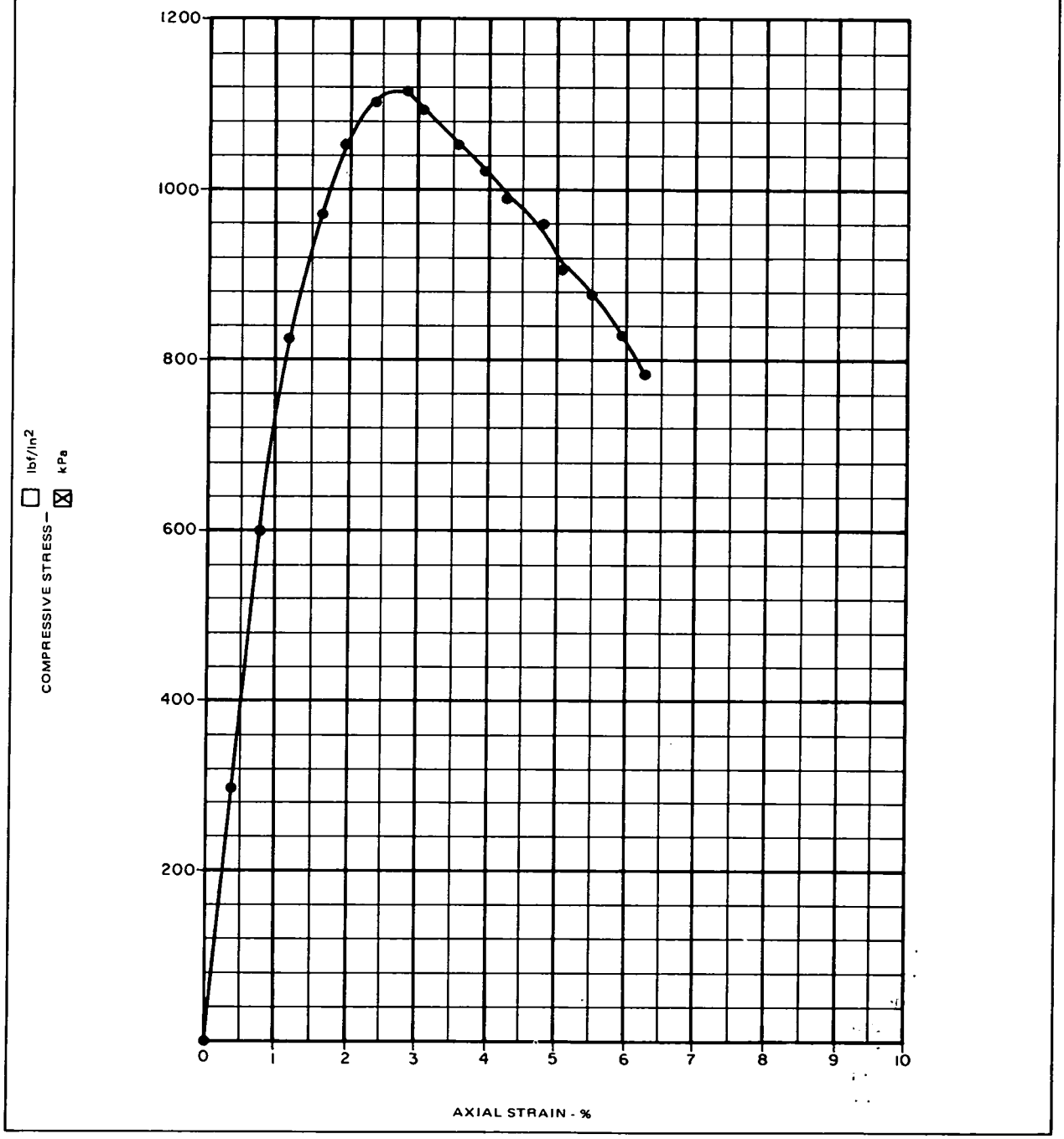

Figure 2B. - Soil-lime unconfined compressive strength test plot (SI example).

UNITED STATES DEPARTMENT OF THE INTERIOR
BUREAU OF RECLAMATION

USBR 5865-89

PROCEDURE FOR

PERFORMING CONSTRUCTION CONTROL OF COMPACTED SOIL-LIME MIXTURES

INTRODUCTION

This procedure is under the jurisdiction of the Geotechnical Services Branch, code D-3760, Research and Laboratory Services Division, Denver Office, Denver, Colorado. The procedure is issued under the fixed designation USBR 5865. The number immediately following the designation indicates the year of acceptance or the year of last revision. Corresponding forms in SI units are included. The SI forms have the letter M following the first digit in the form number.

1. Scope

1.1 This designation outlines procedures for testing soil-lime for construction control and record purposes during construction activities. The testing includes gradation analysis and Atterberg limits for soil classification, lime content, in-place unit weight determination, rapid method of construction control of soil-lime as compacted, record coring for compressive strength, and chemical determination for lime content.

2. Applicable Documents

2.1 *USBR Procedures*:
USBR 3900 Standard Definitions of Terms and Symbols Relating to Soil Mechanics
USBR 5000 Determining Unified Soil Classification (Laboratory Method)
USBR 5205 Preparing Soil Samples by Splitting or Quartering
USBR 5300 Determining Moisture Content of Soil and Rock by the Oven Method
USBR 5320 Determining Specific Gravity of Soils
USBR 5325 Performing Gradation Analysis of Gravel Size Fraction of Soils
USBR 5350 Determining the Liquid Limit of Soils by the One-Point Method
USBR 5360 Determining Plastic Limit and Plasticity Index of Soils
USBR 5365 Determining Shrinkage Limit and Shrinkage Ratio of Soils
USBR 5500 Performing Laboratory Compaction of Soils — 5.50-lbm Rammer and 18.0-in Drop
USBR 5870 Performing Record Coring and Cross Sectioning of Compacted Soil-Lime
USBR 7205 Determining Unit Weight of Soils In-Place by the Sand-Cone Method
USBR 7206 Determining Unit Weight of Soils In-Place by the Rubber Balloon Method
USBR 7240 Performing Rapid Method of Construction Control

2.2 *ASTM Standard*:
E 11 Specification for Wire-Cloth Sieves for Testing Purposes

3. Summary of Method

3.1 The soil used for soil-lime is sampled and gradation analyses and Atterberg limits tests are performed to enable soil classification. The proper amount of lime additive is determined prior to mixing into the soil. The in-place dry unit weight of compacted soil-lime is determined and is compared to maximum unit weight to determine percent compaction. Hardened soil-lime is cored at designated time intervals after compaction, and the cores are tested for lime content and compressive strength. These cores are shipped to the Denver Office, Geotechnical Services Branch, D-3760, for laboratory testing. For future reference, cross sections of the compacted soil-lime are established at designated locations.

4. Significance and Use

4.1 The tests discussed in this procedure are used to determine the adequacy of soil-lime placed in Bureau structures. Thorough inspection and quality control testing are required during all stages of construction to ensure that design criteria are met. Results of early inspections and laboratory testing are used to establish placement conditions, procedures to be used for the remaining construction, and as a reference for the design and construction of future projects.

4.1.1 Gradation analyses and Atterberg limits tests are performed to determine if initial design assumptions of the material are met for the specific percent lime additive.

4.1.2 Compacted soil-lime is tested for percent compaction because placement dry unit weight is directly related to the final compressive strength of the structure. A higher percent compaction at a given lime content generally yields a higher compressive strength.

4.1.3 Cored samples or hardened soil-lime are obtained from the structure and tested for compressive

strength. These data are used to determine increase in strength of soil-lime with time.

4.1.4 The soil-lime mixture is tested for percent lime—calcium oxide (CaO)—to confirm that adequate mixing was performed and that the specified percent lime additive was added.

4.1.5 The times when (1) field mixing is started, (2) field mixing is completed, and (3) field compaction is completed are observed, recorded, and compared with the specification requirements.

4.2 This procedure outlines sampling methods and routine soil testing procedures involved with soil-lime placement.

5. Terminology

5.1 Definitions are in accordance with USBR 3900.

5.2 Terms not included in USBR 3900 specific to this designation are:

5.2.1 *Hydrated Lime.*–Common name for calcium hydroxide [$Ca(OH)_2$], a complex formed by the bond of water to calcium which initiates hydration.

5.2.2 *Lime Content.*–The ratio, expressed as a percent, of the mass of added lime to the dry mass of soil.

5.2.3 *Quicklime.*–Common name for calcium oxide (CaO).

6. Apparatus

6.1 *General Apparatus*:

6.1.1 *Balance or Scale.*–A typical balance or scale used for this designation must be readable to 0.01 lbm (0.01 kg) and have a capacity of about 50 lbm (23 kg).

6.1.2. *Sieve.*–U.S.A. Standard series No. 4 (4.75-mm) sieve, conforming to the requirements of ASTM E 11.

6.1.3 *Sample Container.*–Moisture-proof containers for transporting soil and fresh soil-lime.

6.1.4 Shovel for obtaining soil and fresh soil-lime.

6.1.5 Pan for obtaining lime having minimum dimensions of 12 by 12 inches by 6-inch depth (300 by 300 by 150 mm) depth.

7. Precautions

7.1 *Safety Precautions*:

7.1.1 This designation may involve hazardous materials, operations, and equipment.

7.1.2 Hydrated lime or quicklime becomes very hot when it chemically combines with water. Appropriate safety equipment, such as gloves, protective eyewear, and a respirator, must be worn by personnel handling lime.

7.2 *Technical Precautions.*–To minimize the effects of lime hydration and evaporation, perform all tests expeditiously and continuously to completion. Perform the soil-lime compaction control tests immediately after placement and compaction of the mixture.

8. Calibration and Standardization

8.1 Verify that equipment is currently calibrated in accordance with the applicable calibration procedure. If the calibration is not current, perform the calibration before using the equipment for this procedure.

9. Conditioning

9.1 Protect the soil and fresh soil-lime samples from moisture loss by transporting to the laboratory in moisture-proof containers.

9.2 Retain the samples in moisture-proof containers in the laboratory prior to testing.

10. Procedure

10.1 All data are to be recorded on the appropriate forms for each procedure referenced in this procedure and on the "Soil-Lime Construction" form (fig. 1A or 1B). Data from the forms are summarized on "Summary of Compacted Soil-Lime Tests" form (fig. 2A or 2B) for monthly progress reports. Figures 1A and 2A are in inch-pound units and figures 1B and 2B are in SI units.

10.2 *Mix Area Soil*:

10.2.1 Sample the soil in the mix area and prepare the sampled soil in accordance with USBR 5205.

10.2.2 Test the sampled soil for gradation (USBR 5325), liquid limit (USBR 5350), plastic limit and plasticity index (USBR 5360), and when applicable, shrinkage limit (USBR 5365).

10.2.3 Classify the soil in accordance with the Unified Soil Classification System using USBR 5000.

10.2.4 Record soil classification on figure 2A or 2B.

10.2.5 Repeat steps in subparagraphs 10.2.1 through 10.2.4 for each change in material type (borrow area, etc.).

10.2.6 For record purposes, the estimated volume of soil in the mix area may be recorded on the form (fig. 1A or 1B).

10.3 *Percent Lime Determination*:

10.3.1 The percent lime added can be checked by comparing the mass of lime per square foot to the predetermined value as described in appendix X1.

10.3.2 Place a pan of known dimensions on the soil in the mix area at a location so when the lime spreader passes over it the amount of lime collected on the pan will represent the quantity of lime added to the mix area.

10.3.3 Determine the mass (lbm or kg) of the lime in the pan. Record the data on the form (fig. 1A or 1B).

10.3.4 Calculate and record the mass per square foot of lime in the pan (fig. 1A or 1B).

10.3.5 Repeat the steps in subparagraphs 10.3.2 through 10.3.4 a sufficient number of times to obtain a representative value of lime additive being spread.

10.4 Using a 24-hour clock, record the mixing time on the form (fig. 1A or 1B).

10.4.1 Record the time when soil-lime mixing begins.

10.4.2 Record the time when soil-lime mixing is complete.

10.4.3 Record the time when compaction of the soil-lime is complete.

10.4.4 Calculate and record the elapsed time from start to completion of mixing, and from start of mixing

to completion of compaction. Check the elapsed time against the specification requirements.

10.5 *Soil-Lime Compaction Control*:

10.5.1 Sample and test the compacted soil-lime mixture once for each 500 yd^3 (400 m^3) placed, or a minimum of once per shift, or when the source soil for the soil-lime changes.

10.5.1.1 Determine the in-place unit weight of the compacted soil-lime in accordance with USBR 7205 or 7206 as soon as compaction is complete.

10.5.1.2 Upon completion of in-place unit weight testing, backfill and compact the test hole with fresh soil-lime.

10.5.1.3 Perform Rapid Method of Construction Control (USBR 7240) testing on the in-place unit weight sample obtained in subparagraph 10.5.1.1.

NOTE 1.–Since the properties of the soil-lime change as the lime hydrates, the Rapid Method may be performed at the same time as the soil in the field is being compacted. A sample of uncompacted soil may be obtained for the Rapid Method and then the in-place unit weight test performed at the sampling location.

10.5.2 Repeat the steps in subparagraphs 10.5.1.1 through 10.5.1.3 to meet the requirements in subparagraph 10.5.1.

10.6 Repeat the steps in subparagraphs 10.1 through 10.5.2 of the procedure for each material in each mix area.

10.7 For the required period, summarize the data obtained from testing performed in accordance with subparagraphs 10.1 through 10.6 on the "Summary of Compacted Soil-Lime Tests" form (fig. 2A or 2B).

10.8 Obtain record cores from the soil-lime structure in accordance with USBR 5870.

10.9 Ship the record cores obtained in subparagraph 10.8 to the Geotechnical Services Branch, D-3761, Denver Office, Denver, Colorado.

11. Calculations

11.1 Calculate the mass of lime per square foot.

$$m_1 = \frac{m}{A}$$

where:

m_1 = mass of lime per square foot, lbm/ft^2 or kg/m^2
m = mass of lime in pan, lbm or kg
A = area of pan, ft^2 or m^2

12. Report

12.1 The report is to consist of the following completed and checked forms:

"Soil-Lime Construction" (fig. 1A or 1B).

"Summary of Compacted Soil-Lime Tests" (fig. 2A or 2B).

12.2 All calculations are to show a checkmark.

7-2345 (8-89) Bureau of Reclamation	**SOIL-LIME CONSTRUCTION**	Designation USBR 5865 - 89

PROJECT Example FEATURE Example

SPECIFICATION NO. SL-1 TYPE OF LIME Quicklime SPECIFICATION LIME REQUIREMENT 5 %

VOLUME OF SOIL IN MIX AREA 500 yd^3 TESTED BY _____ DATE _____

COMPUTED BY _____ DATE _____ CHECKED BY _____ DATE _____

CONSTRUCTION MIX AND COMPACTION TIMES

		24 HOUR CLOCK	ELAPSED TIME (min)
1	FIELD MIXING STARTED	1235	
2	FIELD MIXING COMPLETED	1255	
3	FIELD MIXING ELAPSED TIME (2) - (1) (min)		20
4	FIELD COMPACTION COMPLETED	1330	
5	FIELD COMPACTION ELAPSED TIME (4) - (2) (min)		35
6	TOTAL ELAPSED TIME (3) + (5) (min)		55

MASS OF LIME PER SQUARE FOOT

			TEST 1
7	INSIDE LENGTH OF PAN	in	13.0
8	INSIDE WIDTH OF PAN	in	13.0
9	MASS OF PAN	lbm	3.00
10	MASS OF LIME PLUS PAN	lbm	3.88
11	MASS OF LIME (10) - (9)	lbm	0.88
12	AREA OF PAN $\frac{(7) \times (8)}{144\ in^2/ft^2}$	ft^2	1.17
13	MASS OF LIME PER SQUARE FOOT (11) / (12)	lbm/ft^2	0.75
			TEST 2
14	INSIDE LENGTH OF PAN	in	13.0
15	INSIDE WIDTH OF PAN	in	13.0
16	MASS OF PAN	lbm	3.00
17	MASS OF LIME PLUS PAN	lbm	3.93
18	MASS OF LIME (17) - (16)	lbm	0.93
19	AREA OF PAN $\frac{(14) \times (15)}{144\ in^2/ft^2}$	ft^2	1.17
20	MASS OF LIME PER SQUARE FOOT (18) / (19)	lbm/ft^2	0.79
			TEST 3
21	INSIDE LENGTH OF PAN	in	13.0
22	INSIDE WIDTH OF PAN	in	13.0
23	MASS OF PAN	lbm	3.00
24	MASS OF LIME PLUS PAN	lbm	3.82
25	MASS OF LIME (24) - (23)	lbm	0.82
26	AREA OF PAN $\frac{(21) \times (22)}{144\ in^2/ft^2}$	ft^2	1.17
27	MASS OF LIME PER SQUARE FOOT (25) / (26)	lbm/ft^2	0.70

Figure 1A. – Soil-lime construction (in-lb example).

			TEST 4
28	INSIDE LENGTH OF PAN	in	13.0
29	INSIDE WIDTH OF PAN	in	13.0
30	MASS OF PAN	lbm	3.00
31	MASS OF LIME PLUS PAN	lbm	3.88
32	MASS OF LIME (31) - (30)	lbm	0.88
33	AREA OF PAN $\frac{(28) \times (29)}{144\ in^2 / ft^2}$	ft^2	1.17
34	MASS OF LIME PER SQUARE FOOT (32) / (33)	lbm/ft^2	0.75
			TEST 5
35	INSIDE LENGTH OF PAN	in	13.0
36	INSIDE WIDTH OF PAN	in	13.0
37	MASS OF PAN	lbm	3.00
38	MASS OF LIME PLUS PAN	lbm	3.90
39	MASS OF LIME (38) - (37)	lbm	0.90
40	AREA OF PAN $\frac{(35) \times (36)}{144\ in^2 / ft^2}$	ft^2	1.17
41	MASS OF LIME PER SQUARE FOOT (39) / (40)	lbm/ft^2	0.77
42	AVERAGE MASS OF LIME PER SQUARE FOOT $\frac{(13) + (20) + (27) + (34) + (41)}{\text{NUMBER OF TESTS}}$	lbm/ft^2	0.75

Figure 1A. – Soil-lime construction (in-lb example) — Continued.

7M-2345 (8-89) Bureau of Reclamation	**SOIL-LIME CONSTRUCTION**	Designation USBR 5865 - 89

PROJECT Example FEATURE Example

SPECIFICATION NO. SL-1 TYPE OF LIME Quicklime SPECIFICATION LIME REQUIREMENT 5 %

VOLUME OF SOIL IN MIX AREA 400 m^3 TESTED BY _____ DATE _____

COMPUTED BY _____ DATE _____ CHECKED BY _____ DATE _____

CONSTRUCTION MIX AND COMPACTION TIMES

		24 HOUR CLOCK	ELAPSED TIME (min)
1	FIELD MIXING STARTED	1235	
2	FIELD MIXING COMPLETED	1255	
3	FIELD MIXING ELAPSED TIME (2) - (1) (min)		20
4	FIELD COMPACTION COMPLETED	1330	
5	FIELD COMPACTION ELAPSED TIME (4) - (2) (min)		35
6	TOTAL ELAPSED TIME (3) + (5) (min)		55

MASS OF LIME PER SQUARE FOOT

			TEST 1
7	INSIDE LENGTH OF PAN	mm	330
8	INSIDE WIDTH OF PAN	mm	330
9	MASS OF PAN	kg	1.36
10	MASS OF LIME PLUS PAN	kg	1.76
11	MASS OF LIME (10) - (9)	kg	0.40
12	AREA OF PAN $\frac{(7) \times (8)}{1000\ 000\ mm^2 / m^2}$	m^2	0.109
13	MASS OF LIME PER SQUARE FOOT (11) / (12)	kg/m^2	3.67
			TEST 2
14	INSIDE LENGTH OF PAN	mm	330
15	INSIDE WIDTH OF PAN	mm	330
16	MASS OF PAN	kg	1.36
17	MASS OF LIME PLUS PAN	kg	1.78
18	MASS OF LIME (17) - (16)	kg	0.42
19	AREA OF PAN $\frac{(14) \times (15)}{1000\ 000\ mm^2 / m^2}$	m^2	0.109
20	MASS OF LIME PER SQUARE FOOT (18) / (19)	kg/m^2	3.85
			TEST 3
21	INSIDE LENGTH OF PAN	mm	330
22	INSIDE WIDTH OF PAN	mm	330
23	MASS OF PAN	kg	1.36
24	MASS OF LIME PLUS PAN	kg	1.73
25	MASS OF LIME (24) - (23)	kg	0.37
26	AREA OF PAN $\frac{(21) \times (22)}{1000\ 000\ mm^2 / m^2}$	m^2	0.109
27	MASS OF LIME PER SQUARE FOOT (25) / (26)	kg/m^2	3.39

Figure 1B. – Soil-lime construction (SI example).

			TEST 4
28	INSIDE LENGTH OF PAN	mm	330
29	INSIDE WIDTH OF PAN	mm	330
30	MASS OF PAN	kg	1.36
31	MASS OF LIME PLUS PAN	kg	1.76
32	MASS OF LIME (31) - (30)	kg	0.40
33	AREA OF PAN $\frac{(28) \times (29)}{1000\ 000\ mm^2 / m^2}$	m^2	0.109
34	MASS OF LIME PER SQUARE FOOT (32) / (33)	kg/m^2	3.67
			TEST 5
35	INSIDE LENGTH OF PAN	mm	330
36	INSIDE WIDTH OF PAN	mm	330
37	MASS OF PAN	kg	1.36
38	MASS OF LIME PLUS PAN	kg	1.77
39	MASS OF LIME (38) - (37)	kg	0.41
40	AREA OF PAN $\frac{(35) \times (36)}{1000\ 000\ mm^2 / m^2}$	m^2	0.109
41	MASS OF LIME PER SQUARE FOOT (39) / (40)	kg/m^2	3.76
42	AVERAGE MASS OF LIME PER SQUARE FOOT $\frac{(13) + (20) + (27) + (34) + (41)}{\text{NUMBER OF TESTS}}$	kg/m^2	3.67

Figure 1B. – Soil-lime construction (SI example) — Continued.

7-2346 (4-86)
Bureau of Reclamation

SUMMARY OF COMPACTED SOIL-LIME TESTS

Designation USBR 5865-89

PROJECT Example FEATURE Example SPECIFICATION NO. SL-1 PERIOD OF REPORT 10-1-89 TO 10-31-89

SPECIFICATION REQUIREMENTS

MINIMUM D VALUE 96.0 %

PERCENT LIME 5.0 %

TYPE OF LIME USED Quicklime

FILL NAME RA-IA

BORROW AREA CODES 1 - Area A1

2 - Area B1

- - -

TOTAL MATERIAL PLACED 18,000 yd^3

NO. OF ACCEPTED TESTS 9

NO. OF REJECTED TESTS 1

TEST IDENTIFICATION																FIRST SPECIMEN AND FILL UNIT WEIGHT CORRELATION TESTS AT FILL MOISTURE							STANDARD LABORATORY		RAPID CONTROL VALUES			
NUMBER						BORROW AREA CODE	LOCATION			METHOD OF COMPACTION	FIELD MIXING ELAPSED TIME, MIN	FIELD COMPACTION ELAPSED TIME, MIN	TOTAL ELAPSED TIME, MIN	SOIL CLASSIFICATION SYMBOL	LIME CONTENT FROM MIX AREA - %	TOTAL MATERIAL		PLUS NUMBER 4 - %	PLUS NO. 4 SPECIFIC GRAVITY	MINUS NO. 4 MATERIAL			MAXIMUM DRY UNIT WEIGHT lbf/ft^3	OPTIMUM MOISTURE CONTENT w_o %	VARIATION FROM OPTIMUM $w_o - w_f$ %	COMPACTIVE EFFORT C RATIO %	D-VALUE %	REMARKS
MONTH	DAY	SHIFT	NUMBER	TYPE	STATUS		STATION ft.	OFFSET ft.	ELEVATION ft							WET UNIT WEIGHT lbf/ft^3	MOISTURE CONTENT %			MOISTURE CONTENT w_f %	COMPACTED DRY UNIT WEIGHT lbf/ft^3	FILL DRY UNIT WEIGHT lbf/ft^3							
01	15	A	1	R	A	1	115+75	25L	7235	SR	30	25	55	CH	5.0	116.2	21.1	0.0	0.00	21.1	96.1	96.0	96.8	21.9	0.8	99.8	99.2	First test on fill
01	15	B	1	D	R	2	1+00	℄	7205	SR	30	25	55	CH	5.1	141.2	5.9	33.9	2.65	9.2	124.3	119.8	125.7	10.4	1.2	96.4	95.3	* Rejected D-ratio low
01	15	C	1	D	A	2	1+00	℄	7205	SR	30	40	70	CH	5.1	139.6	8.2	26.8	2.54	10.1	125.2	121.7	125.9	10.8	0.7	97.2	96.6	RE-01-15-B-1
01	15	C	2	R	A	1	3+15	105R	7199	SR	25	30	55	CH	5.0	139.3	9.9	18.9	2.71	12.0	120.7	121.3	120.7	12.1	0.1	100.4	100.4	
01	15	C	3	R	A	2	99+99	14R	7200	SR	30	20	50	CH	5.3	139.9	10.2	19.9	2.71	12.5	120.0	119.6	120.0	12.4	-0.1	99.6	99.6	
01	16	A	1	C	A	1	115+35	27L	10950	SR	30	25	55	CH	5.4	117.4	22.0	0.0	0.00	22.0	97.5	96.2	98.5	22.9	0.9	98.7	97.7	
01	16	A	2	R	A	2	1+15	35R	10761	SR	20	25	45	CH	5.0	111.4	16.8	0.0	0.00	16.8	96.6	95.4	98.6	19.5	2.7	98.8	96.8	
01	16	B	1	D	A	2	3+45	19R	10804	SR	25	30	55	CH	5.1	132.0	12.4	17.6	2.68	14.8	112.2	110.9	113.7	16.2	1.4	98.8	97.5	
01	16	B	2	R	A	1	6+00	147L	10803	SR	25	25	50	CH	5.1	133.1	12.8	17.4	2.70	15.3	110.1	110.2	113.0	16.8	1.5	100.2	97.5	
01	16	B	3	R	A	1	21+16	17R	10910	SR	20	30	50	CH	5.0	139.6	10.3	19.2	2.58	12.5	119.8	119.2	119.0	12.4	-0.1	99.7	99.7	

GPO 850-648

Figure 2A. – Summary of compacted soil lime tests (in-lb example).

7m-2346 (4-86)
Bureau of Reclamation

SUMMARY OF COMPACTED SOIL-LIME TESTS

Designation USBR 5865-89

PROJECT Example FEATURE Example SPECIFICATION NO. SL-1 PERIOD OF REPORT 10-1-89 TO 10-31-89

SPECIFICATION REQUIREMENTS

MINIMUM D VALUE 96.0 %

PERCENT LIME 5.0 %

TYPE OF LIME USED Quicklime

FILL NAME RA-IA

BORROW AREA CODES 1 = Area AI

2 = Area BI

– = — —

TOTAL MATERIAL PLACED 14000 m^3

NO. OF ACCEPTED TESTS 9

NO. OF REJECTED TESTS 1

TEST IDENTIFICATION															FIRST SPECIMEN AND FILL UNIT WEIGHT CORRELATION TESTS AT FILL MOISTURE							STANDARD LABORATORY		RAPID CONTROL VALUES			REMARKS
NUMBER							LOCATION								TOTAL MATERIAL				MINUS NO. 4 MATERIAL								
MONTH	DAY	SHIFT	NUMBER	TYPE	STATUS	BORROW AREA CODE	STATION m	OFFSET m	ELEVATION m	METHOD OF COMPACTION	FIELD MIXING ELAPSED TIME, MIN	FIELD COMPACTION ELAPSED TIME, MIN	TOTAL ELAPSED TIME, MIN	SOIL CLASSIFICATION SYMBOL	LIME CONTENT FROM MIX AREA - %	WET UNIT WEIGHT kg/m^3	MOISTURE CONTENT %	PLUS NUMBER 4 - %	PLUS NO. 4 SPECIFIC GRAVITY	MOISTURE CONTENT w_f %	COMPACTED DRY UNIT WEIGHT kN/m^3	FILL DRY UNIT WEIGHT kN/m^3	MAXIMUM DRY UNIT WEIGHT kN/m^3	OPTIMUM MOISTURE CONTENT w_o %	VARIATION FROM OPTIMUM $w_o - w_f$ %	COMPACTIVE EFFORT C RATIO %	D-VALUE %	
01	15	A	1	R	A	1	35+28	8L	2205	SR	30	25	55	CH	5.0	1861	21.1	0.0	0.00	21.1	15.10	15.08	15.21	21.9	0.8	99.8	99.2	First test on fill
01	15	B	1	D	R	2	30	℄	2196	SR	30	25	55	CH	5.1	2262	5.9	33.9	2.65	9.2	19.53	18.82	19.75	10.4	1.2	96.4	95.3	*Rejected D – ratio low
01	15	C	1	D	A	2	30	℄	2196	SR	30	40	70	CH	5.1	2236	8.2	26.8	2.54	10.1	19.67	19.12	19.78	10.8	0.7	97.2	96.6	RE-01-15-B-1
01	15	C	2	R	A	1	96	32R	2194	SR	25	30	55	CH	5.0	2231	9.9	18.9	2.71	12.0	18.96	19.05	18.96	12.1	0.1	100.4	100.4	
01	15	C	3	R	A	2	30+48	4R	2195	SR	30	20	50	CH	5.3	2241	10.2	19.9	2.71	12.5	18.85	18.79	18.85	12.4	-0.1	99.6	99.6	
01	16	A	1	C	A	1	35+16	8L	3338	SR	30	25	55	CH	5.4	1881	22.0	0.0	0.00	22.0	15.32	15.11	15.47	22.9	0.9	98.7	97.7	
01	16	A	2	R	A	2	35	11R	3280	SR	20	25	45	CH	5.0	1784	16.8	0.0	0.00	16.8	15.17	14.99	15.49	19.5	2.7	98.8	96.8	
01	16	B	1	D	A	2	1+05	6R	3293	SR	25	30	55	CH	5.1	2214	12.4	17.6	2.68	14.8	17.63	17.42	17.86	16.2	1.4	98.8	97.5	
01	16	B	2	R	A	1	1+83	45L	3293	SR	25	25	50	CH	5.2	2132	12.8	17.4	2.70	15.3	17.30	17.31	17.75	16.8	1.5	100.2	97.5	
01	16	B	3	R	A	1	6+45	5R	3325	SR	20	30	50	CH	5.0	2236	10.3	19.2	2.58	12.5	18.82	18.77	18.69	12.4	-0.1	99.7	99.7	

GPO 850-649

Figure 2B. – Summary of compacted soil lime tests (SI example).

APPENDIX

X1. DETERMINING AMOUNT OF LIME TO ADD TO SOIL

X1.1 The percent lime to be added to the soil is stated in the specifications as either percent hydrated lime or percent quicklime. Because two forms of lime can be used, the lime must always be referred to as *hydrated lime* or *quicklime* on all test forms, inspection reports, or other reports.

X1.2 The percent lime is converted to an amount of lime to be added to the mass of one square foot of loose untreated soil; it is expressed in terms of lbm/ft^2. The amount of lime added can then be monitored during construction by measuring the mass of lime added per square foot.

X1.3 The calculation of mass of soil per square foot is required. The uncompacted soil that the lime is added to is either loosened in-place (discing, etc.) or is excavated and then transported to a mixing area. In either case, the soil exists as a loose lift of constant thickness. The thickness depends on the equipment and procedures that are used to mix the lime into the soil.

X1.4 The density of the compacted layer of soil-lime must be determined. Before construction, the maximum unit weight can be determined by performing either USBR 5500 or 7240 on the soil that is to be used. The maximum unit weight must be converted to "maximum density." The in-place dry density of the compacted soil-lime can be established by multiplying the "maximum density" by the specified percent compaction (converted to decimal form).

X1.5 During construction, the density of the compacted layer of soil-lime can be selected based on the in-place densities obtained from the construction control testing.

X1.6 The thickness of the loose soil that results in a 6-inch compacted layer must be predetermined. Before construction, assume a loose thickness of 9 inches. During construction, measurements of loose thickness versus compacted lift thickness should be made to establish a representative value.

X1.7 Mass of soil per square foot is determined.

$$m_2 = \frac{d_1}{d_2} \times \frac{6}{12} \times \rho_d \qquad \text{(X1)}$$

where:

m_2 = mass of soil per square foot of loose soil, lbm/ft^2
d_1 = thickness of loose soil lift, in
d_2 = thickness of loose soil that results in a 6-inch compacted lift, in
6 = thickness of compacted lift, in
12 = changes inch to foot
ρ_d = dry density of compacted soil-lime, lbm/ft^3

X1.8 The amount of lime to be added is determined.

$$m_1 = \frac{Lm_2}{100} \qquad \text{(X2)}$$

where:

m_1 = mass of lime per square foot of loose soil, lbm/ft^2
L = percent lime to be added, %
100 = convert from percent to decimal

UNITED STATES DEPARTMENT OF THE INTERIOR
BUREAU OF RECLAMATION

USBR 5870-89

PROCEDURE FOR

PERFORMING RECORD CORING AND CROSS SECTIONING OF COMPACTED SOIL-LIME

INTRODUCTION

This procedure is under the jurisdiction of the Geotechnical Services Branch, code D-3760, Research and Laboratory Services Division, Denver Office, Denver, Colorado. The procedure is issued under the fixed designation USBR 5870. The number immediately following the designation indicates the year of acceptance or the year of last revision. Corresponding forms in SI units are included. The SI forms have the letter M following the first digit in the form number.

1. Scope

1.1 This designation outlines the procedure for performing record coring and cross sectioning of compacted soil-lime.

2. Applicable Documents

2.1 *USBR Procedures*:
USBR 3900 Standard Definitions of Terms and Symbols Relating to Soil Mechanics
USBR 5720 Performing Unconfined Compressive Strength Testing of Soils
USBR 5860 Performing Compressive Strength Testing of Compacted Soil-Lime Mix
USBR 5865 Performing Construction Control of Compacted Soil-Lime Mixtures

3. Summary of Method

3.1 Three- or four-inch (76- or 102-mm) diameter core samples of soil-lime are obtained through the entire thickness of a soil-lime section using a rotary drill equipped with a masonry-type diamond drill bit. The coring is performed 28, 90, and 360 days after soil-lime placement and samples are retrieved, labeled, and logged. Core samples are tested for percent lime as calcium oxide (CaO) and for compressive strength.

3.2 Following the 28-day coring, a steel reinforcing bar is placed in each drill hole and grouted into place. The bar is placed so it extends 1 to 2 inches (25 to 50 mm) above the surface of the soil-lime. Record cross sections are taken then at these locations. Soil-lime cross sections are plotted referencing (1) the locations and elevations of the soil-lime surface and reinforcing bars, and (2) the thickness of the soil-lime determined from record coring.

4. Significance and Use

4.1 Soil-lime record coring is performed to evaluate construction control (USBR 5865) and for record purposes.

4.1.1 Record cores are obtained at 28, 90, and 360 days after placement.

4.1.2 Record coring is conducted to determine the quality and the total thickness of the soil-lime.

4.1.3 Record core drill hole locations are based on the design of the soil-lime structure. Hole locations required for testing should be determined before beginning construction. Cores also should be obtained in any area of questionable soil-lime quality.

4.2 Record cross sections are determined at locations where the 28-day core samples are obtained.

4.3 Results from record coring, laboratory test results on record core samples, and the plotted cross sections are used to assess soil-lime deterioration and erosion when inspected in future years.

5. Terminology

5.1 Definitions are in accordance with USBR 3900.

6. Apparatus

6.1 *Equipment Unique to This Procedure*:

6.1.1 *Drill and Drill Stand.*–A rotary drill capable of drilling 4-inch (102-mm) diameter core samples up to 4 feet (1.2 m) in length. The drill must be capable of drilling holes perpendicular to the placement lifts on soil-lime slopes. The drill should be mounted and the drill stand anchored so that the drill and stand are stable during the drilling process.

6.1.2 *Rod.*–Removable extension adaptors and extension rods compatible with drill and core barrels.

6.1.3 *Water.*–Water supply for drilling to remove cuttings and cool drill bits.

6.1.4 *Generator.*–Portable electric generator suitable for supplying electric power to drill.

6.1.5 *Drill.*–Rotary impact drill or other suitable device for drilling holes for anchor bolts.

6.1.6 *Anchors.*–Anchors and bolts adequate for securing the drill stand to the soil-lime.

6.1.7 *Core Barrels.*–Diamond surface set or diamond impregnated masonry drill bits, 3- or 4-inch (76- or 102-

mm) inside diameter, preferably of sufficient length to penetrate the full vertical depth of the soil-lime.

6.1.8 *Core Retrieval Barrels.*-Worn 3- or 4-inch (76- or 102-mm) diameter masonry drill bits with cutting edge removed and slotted on the drilling end for retrieving core samples (fig. 1).

6.1.9 *Shipping Boxes.*-Cardboard boxes with Styrofoam inserts and plywood bottoms for shipping 4-inch (102-mm) diameter core samples to the Bureau's Denver Office.

6.1.10 *Reinforcing Bars.*-Sections of No. 4 steel reinforcing bar cut to appropriate lengths. The reinforcing bar should be of sufficient length to penetrate the entire vertical depth of the soil-lime and extend 1 to 2 inches (25 to 55 mm) above the surface of the soil-lime.

6.2 *Miscellaneous Equipment*:

6.2.1 Assorted tools necessary for drilling operations, chain tongs and pipe wrenches for installing and removing core barrels, and waterproof markers for labeling core samples.

6.2.2 Potable water, concrete premix or bagged cement or grout premix for backfilling drill holes.

7. Precautions

7.1 *Safety Precautions*:

7.1.1 This designation may involve hazardous materials, operations, and equipment.

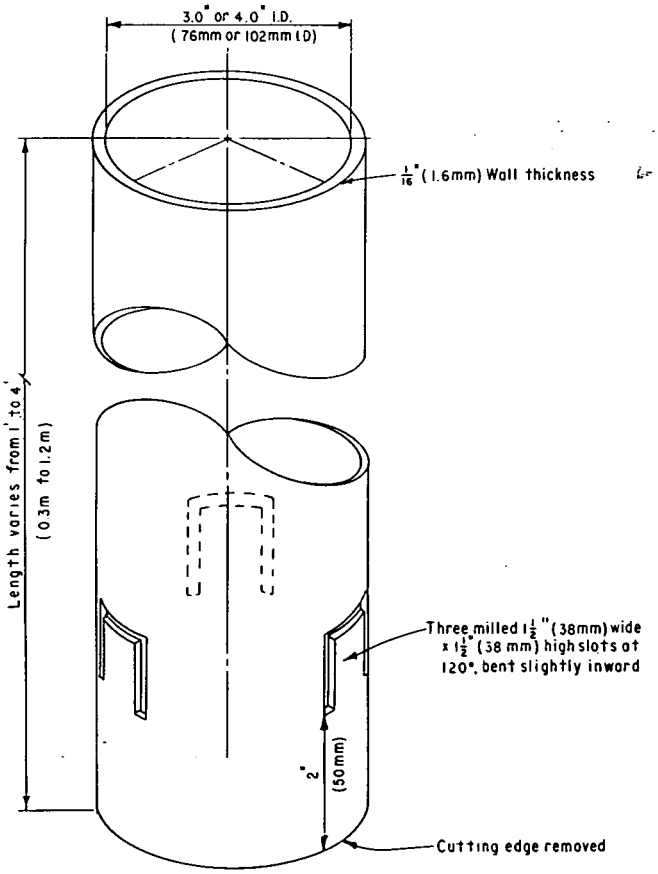

Figure 1. - Core retrieval barrels made from worn diamond studded core barrels.

7.1.2 Safety hazards may be involved in use of the rotary drill. Refer to the manufacturer's handbook and the Bureau's safety manual [1][1] before operating the drill.

7.1.3 Ensure that electrical supply lines are well insulated and connections kept dry to prevent electrical shock.

7.1.4 Use caution when refilling gasoline tanks on electrical generators.

7.1.5 Drilling equipment and core samples are heavy and awkward to handle; use care when lifting and transporting equipment.

7.1.6 Drilling operations often take place on sloped surfaces. Adequate safety shoes or safety boots should be worn to prevent slipping into machinery or down the slope.

7.1.7 Wear gloves to protect the hands during coring operations.

7.1.8 Wear safety glasses, respirator, and hardhat.

7.2 *Technical Precautions*:

7.2.1 Core barrels should remain perpendicular to the placement lifts during drilling. The drill and stand should be stable while drilling to prevent core from binding in the barrel.

7.2.2 Drilling should be performed at a slow rotation speed, with constant feed pressure so that the core is not damaged during the drilling operation.

7.2.3 Core retrieval barrels should be of sufficient length to remove the core in one piece throughout the entire depth of soil-lime.

8. Sampling, Test Specimens, and Test Units

8.1 Frequency and location of coring and cross sectioning of soil-lime structures are determined on an individual basis by the Denver Office staff.

9. Calibration and Standardization

9.1 Not applicable, reference standards are not used for this procedure.

10. Conditioning

10.1 Place core samples in shipping boxes and cover immediately after retrieval to prevent moisture loss.

11. Procedure

11.1 All data are recorded on the "Log of Soil-Lime Drill Hole" form as shown on figure 2A or 2B. Figure 2A is in inch-pound units and figure 2B is in SI units.

11.2 Anchor the drill stand to the soil-lime in a manner that effectively stabilizes the drill and drill stand during drilling and allows for coring and core retrieval to be perpendicular to the placement lifts.

11.3 As required, install a 3- or 4-inch (76- or 102-mm) inside-diameter core barrel of sufficient length to penetrate the full depth of the soil-lime sections.

[1] Number in brackets refers to the reference.

11.4 Drill perpendicular to the placement lifts through the entire depth of soil-lime to the embankment or foundation contact in one continuous operation.

11.4.1 Drilling is to progress slowly and continuously to minimize damage to the core.

11.4.2 If the core has broken and is binding in the core barrel, stop drilling, remove the core barrel, and retrieve the broken pieces of core with the core retrieval barrel before continuing.

11.4.3 If the depth of soil-lime exceeds the maximum length of the core barrel, remove the core barrel and retrieve core with core retrieval barrel. Add an extension rod and continue drilling to embankment or foundation contact.

11.5 Remove the core barrel, and install a core retrieval barrel of sufficient length to remove the core in one piece.

11.6 Retrieve the core in one operation by inserting the core retrieval barrel over the full length of core and extracting both from the hole. As soon as the core retrieval barrel and core are out of the hole, place a cover over the hole to prevent the core from falling back into the hole.

11.7 Remove the core retrieval barrel from the drill, and carefully remove the core from the barrel by pushing the core out the top. Place core in a shipping box in the exact order that it was retrieved.

11.8 Immediately label the core by hole number and its position in the hole from top to bottom. Indicate the direction of top on each piece of core.

11.9 Log the hole as shown on figure 2A or 2B, note:

- Drilling method
- Depth at which breaks occur in core
- Lift contacts where possible
- Embankment or foundation contact
- Other pertinent information (i.e., spun core, loose material, poor compaction, lime concentrations that did not hydrate, etc.).

11.10 When possible, keep the shipping box lid closed to prevent moisture loss.

11.11 Refill all core holes with grout or premix slurry.

11.11.1 Following the 28-day coring, grout a No. 4 steel reinforcing bar into each drill hole through the entire depth of soil-lime. Make sure that a portion of the bar which extends above the surface is vertical. Place grout around the reinforcing bar so the bar extends 1 to 2 inches (25 to 50 mm) above the surface of the soil-lime.

11.11.2 Either place the bars or cut the tops so that all the bars are about the same height above the soil-lime surface.

11.12 Pack the cores carefully to prevent damage in transit.

11.13 Mark and address the outside of the shipping box as follows:

Fragile
Do not freeze or drop
This side up (arrow pointing in right direction)

Regardless of method of shipment, samples should be sent to the Denver Federal Center addressed as follows:

Geotechnical Services Branch, D-3760
Building 56, Entrance W-13
Bureau of Reclamation
PO Box 25007
Denver CO 80225

11.13.1 Ensure that the cores are completely labeled and securely packed before shipping to prevent damage during shipment.

11.14 Following the 28-day coring operation, coordinate cross sectioning of the soil-lime with a survey crew to obtain:

- Stations
- Elevations
- Offsets of reinforcing bars installed during record coring
- Measure the distance that each reinforcing bar extends above the surface of the soil-lime.

Plot cross sections and reference:

- Reinforcing bars installed after record coring
- Thickness of soil-lime determined during record coring

See figure 3A or 3B for an example of a typical soil-lime cross section. Figure 3A is in inch-pound units and figure 3B is in SI units.

11.15 Ninety- and 360-day core samples are taken immediately adjacent to the locations of the 28-day core holes.

12. Calculations

12.1 Not applicable, calculations are not required for this procedure.

13. Report

13.1 The report is to consist of the following completed and checked form and plots:

"Log of Soil-Lime Drill Hole" (fig. 2A or 2B).
Plots of soil-lime cross sections (fig. 3A or 3B).

14. Reference

[1] *Driller's Safety Manual*, Bureau of Reclamation, Denver, CO, 1982.

7-2344 (4-86)
Bureau of Reclamation

LOG OF SOIL-LIME DRILL HOLE

Designation USBR 5870-89

PROJECT E.M. FEATURE Example Canal LOCATION Reach 1

HOLE NO. DH-1 STATION 32+89 ft. OFFSET 32.9 left ℄ ft.

GROUND ELEVATION 493.4 ft. TOTAL DEPTH 4.0 ft. CORE DIAMETER 4 in.

DATE CORED 10-24-89 LOGGED BY _____ APPROVED BY _____

NOTES (a) DESCRIPTION OF DRILLING METHOD (b) OTHER PERTINENT INFORMATION	PERCENT LIME FROM LABORATORY TESTING	DEPTH ft.	GRAPHIC LOG	DESCRIPTION OF CORE
Used 3/4 inch electric drill with stand anchored to soil-lime, diamond tipped core barrel, 4 inch inside diameter. Hole drilled perpendicular to lift placement. Drill hole backfilled with premix concrete.		.3 .9 1 1.4 1.8 2 2.3 2.9 3 3.4 3.7 4		Lime particles visible throughout spun core. Break Solid Break Top crumbly Solid Break Solid Break Crumbly uncompacted Break Solid Break Crumbly Break Lime particles visible Soil, Foundation

GPO 850-599

Figure 2A. - Log of soil-lime drill hole (in-lb example).

7m-2344 (4-86) Bureau of Reclamation	LOG OF SOIL-LIME DRILL HOLE	Designation USBR 5870-89

PROJECT E.M. FEATURE Example Canal LOCATION Reach 1

HOLE NO. DH-1 STATION 10+00 m OFFSET 10.0 left ℄ m

GROUND ELEVATION 150.0 m TOTAL DEPTH 1.2 m CORE DIAMETER 102 mm

DATE CORED 10-24-89 LOGGED BY _____ APPROVED BY _____

NOTES (a) DESCRIPTION OF DRILLING METHOD (b) OTHER PERTINENT INFORMATION	PERCENT LIME FROM LABORATORY TESTING	DEPTH m	GRAPHIC LOG	DESCRIPTION OF CORE
Used 19mm electric drill with stand anchored to soil-lime, diamond tipped core barrel, 102 mm inside diameter.				Lime particles visible throughout spun core.
		.2		Break, possible lift line.
				Solid
Hole drilled perpendicular to lift placement.		.4		Break
		.5		Top crumbly
Drill hole backfilled with premix concrete.				Solid
		.7		Break
				Solid
		1.0		Break
				Soil, Foundation
		1.2		
		1.5		

GPO 850-600

Figure 2B. – Log of soil-lime drill hole (SI example).

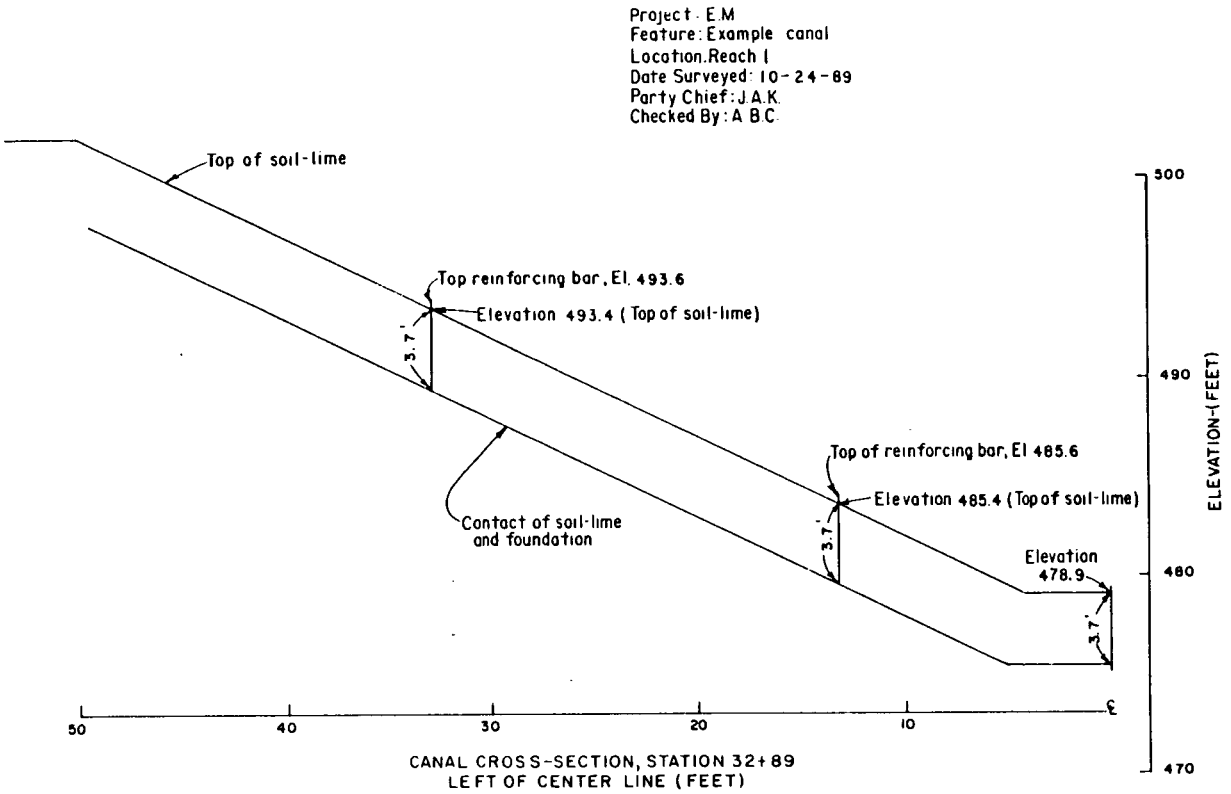

Figure 3A. – Typical soil-lime cross section (in-lb units).

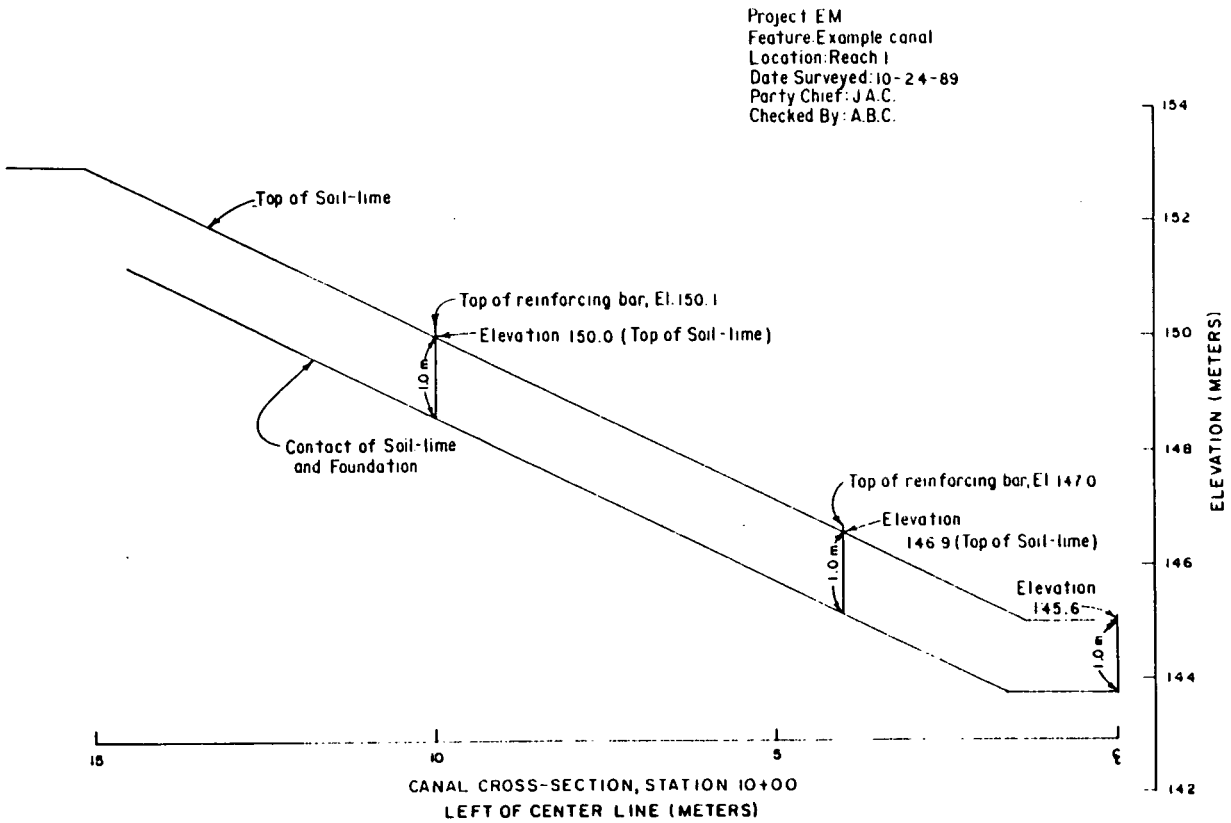

Figure 3B. – Typical soil-lime cross.section (SI units).

UNITED STATES DEPARTMENT OF THE INTERIOR
BUREAU OF RECLAMATION

USBR 5875-89

PROCEDURE FOR

DETERMINING SOIL-LIME pH

INTRODUCTION

This procedure is under the jurisdiction of the Geotechnical Services Branch, code D-3760, Research and Laboratory Services Division, Denver Office, Denver, Colorado. The procedure is issued under the fixed designation USBR 5875. The number immediately following the designation indicates the year of acceptance or the year of last revision.

1. Scope

1.1 This designation outlines the procedure for performing the soil-lime pH test.

1.2 The procedure is used to determine the lowest percentage of lime required to stabilize a soil. The lime percentage which results in a soil-lime pH of 12.4 is optimum for use as a soil stabilizer.

2. Auxiliary Tests

2.1 A test sample must be obtained in accordance with USBR 5205 prior to performing this procedure.

3. Applicable Documents

3.1 *USBR Procedures*:
USBR 1012 Calibrating Balances or Scales
USBR 1020 Calibrating Ovens
USBR 1025 Checking Sieves
USBR 3900 Standard Definitions of Terms and Symbols Relating to Soil Mechanics
USBR 5000 Determining Unified Soil Classification (Laboratory Method)
USBR 5205 Preparing Soil Samples by Splitting or Quartering
USBR 5330 Performing Gradation Analysis of Fines and Sand Size Fraction of Soils, Including Hydrometer Analysis
USBR 5350 Determining the Liquid Limit of Soils by the One-Point Method

3.2 *ASTM Standard*:
E 11 Specification for Wire-Cloth Sieves for Testing Purposes

3.3 Manufacturers' pH meter calibration procedure.

4. Summary of Method

4.1 Soil specimens are mixed with either hydrated lime or quicklime ranging from 0 to 12 percent (lime) by dry mass of soil. The combination of soil-lime is mixed with CO_2-free distilled water for a prescribed time. Two pH readings are taken per specimen. The lime percentage that results in a soil-lime pH of 12.4 is optimum for use as a soil stabilizer.

5. Significance and Use

5.1 The soil-lime pH test is performed as an indicator test to determine the lowest percent lime required to stabilize a soil.

5.2 The lime percentage that results in a soil-lime pH of 12.4 is optimum. Additional lime is free lime and may not change the soil properties.

5.3 The procedure describes a method to determine the percent lime for a feasible design to stabilize a soil.

6. Terminology

6.1 Definitions are in accordance with USBR 3900.

6.2 Terms not included in USBR 3900 specific to this designation are:

6.2.1 *Buffer Solution.*–A solution of specific pH value used to calibrate the pH meter.

6.2.2 *Free Lime.*–Lime in a soil-lime mixture that has not hydrated.

6.2.3 *Hydrated Lime.*–The common name for calcium hydroxide [$Ca(OH)_2$], a complex formed by the bond of water to calcium which initiates hydration.

6.2.4 *Lime Content.*–Amount of lime added to soil, specified by percent of dry mass of soil.

6.2.5 *pH.*–The negative logarithm of the effective hydrogen-ion concentration or hydrogen-ion activity in gram equivalents per liter used in expressing both acidity and alkalinity on a scale whose values range from 0 to 14; numbers less than 7 indicate increasing acidity, 7 represents neutrality, and numbers greater than 7 indicate increasing alkalinity.

6.2.6 *Quicklime.*–The common name for calcium oxide (CaO).

7. Apparatus

7.1 *General Apparatus*:

7.1.1 *Balance or Scale.*–A typical balance or scale used for this designation must be readable to 0.01 gram and have a capacity of about 600 grams.

7.1.2 *Sieve.*–U.S.A. Standard series No. 40 (425 μm) conforming to requirements of ASTM E 11.

7.1.3. *Drying Oven.*–An oven, thermostatically controlled, preferably of the forced draft type, and capable of maintaining a uniform temperature of 230±9 °F (110± 5 °C) throughout the drying chamber.

7.1.4 *Plastic Bottles.*–Thirteen 150-mL (or larger) plastic bottles with watertight caps.

7.1.5 *Plastic Beakers.*–Twenty-six 50-mL (or larger) plastic beakers.

7.1.6 *Safety Equipment.*–Protective eyewear, gloves, respirator, plastic apron, etc.

7.2 *Equipment Unique to This Procedure*:

7.2.1 *A pH Meter.*–Equipped with an electrode and having a pH range from 1 to 14.

8. Reagents and Materials

8.1 CO_2-free fresh distilled water stored in a tightly capped container.

8.2 Buffer solutions having a pH of 4, 7, 10, and 14.

8.3 Quicklime, calcium oxide (CaO).

8.4 Hydrated lime, calcium hydroxide [$Ca(OH)_2$].

9. Precautions

9.1 *Safety Precautions*:

9.1.1 Hydrated lime or quicklime becomes very hot when it chemically combines with water. Appropriate safety equipment such as gloves, protective eyewear, respirator, and a plastic apron should be worn when handling lime.

9.1.2 This procedure may involve hazardous materials, operations, and equipment.

9.2 *Technical Precautions*:

9.2.1 Computations to determine the mass of quicklime and hydrated lime (calcium hydroxide) are different. (See par. 14 for applicable computations depending on the type of lime used.)

9.2.2 The soil-lime-water mixture is alkaline and will react with metal or glass; therefore, plastic bottles and beakers must be used.

10. Calibration and Standardization

10.1 Verify that equipment is currently calibrated in accordance with the applicable calibration procedure. If the calibration is not current, perform the calibration before using the equipment for the sample preparation.

USBR 1012 Calibrating Balances or Scales
USBR 1020 Calibrating Ovens
USBR 1025 Checking Sieves

10.2 *The pH Meter Calibration.*–Calibrate the pH meter with the buffer solution according to manufacturer's specifications.

11. Sampling, Test Specimens, and Test Units

11.1 *Sample Preparation*:

11.1.1 Prepare a representative soil sample in accordance with USBR 5205.

11.1.2 Ovendry the sample at a constant temperature of 230 °F (110 °C) for a minimum of 16 hours or until a constant mass is obtained.

11.1.3 Pass sufficient material through the No. 40 sieve (425 μm) to obtain 550 grams of material smaller than No. 40.

11.1.4 Thoroughly mix the material passing the No. 40 sieve.

11.1.5 If the procedure in paragraph 13 cannot be performed immediately, see subparagraph 12.1.

12. Conditioning

12.1 To perform the procedure discussed in paragraph 13, it is necessary that the material obtained (outlined in subpar. 11.1) remain in an ovendried state. If the procedure described in paragraph 13 cannot immediately follow sample preparation in subparagraph 11.1, store the material in an airtight and moisture-proof container.

12.2 The mixture of soil, lime, and distilled water (prepared according to subpars. 13.2 and 13.3) requires a minimum mixing time of 30 seconds every 10 minutes for 1 hour.

13. Procedure

13.1 All data are to be recorded on the "Soil-Lime pH Test" form as shown on figure 1.

13.2 From the 550-gram ovendried soil sample prepared in paragraph 11, obtain thirteen 20.00-gram specimens weighed to the nearest 0.01 gram.

13.3 Pour each 20.00-gram specimen into a 150-mL (or larger) clean, dry plastic bottle having a watertight cap.

13.4 Calculate and record the mass of lime required for each percentage of lime to be tested (usually 0 to 12 percent by dry mass of soil.)

13.5 Depending on type of lime used, the mass of lime is determined according to computations in subparagraph 14.2 or 14.3. Obtain the specified mass of lime to the nearest 0.01 gram for each specimen. Combine each soil specimen with the specified mass of lime.

13.6 Thoroughly mix the soil and lime into a homogenous mixture by shaking the capped plastic bottle.

13.7 Add 100 mL (±1.0 mL) of CO_2-free distilled water to each specimen.

13.8 Cap the bottle and shake the soil-lime-water mixture to form a slurry. Shake vigorously until there is either no evidence of dry material or a minimum of 30 seconds has elapsed.

13.9 Shake each slurried specimen for a 30-second period every 10 minutes for 1 hour.

13.10 After 1 hour, transfer 25 mL (±1.0 mL) of slurry to each of two clean, dry plastic beakers and measure the pH of the slurry in each beaker. Perform this operation for each percentage of lime added to the soil.

13.11 For each beaker, record the pH of the slurry to the nearest 0.1.

13.12 Calculate and record the average pH value for each percentage of lime.

14. Calculations

14.1 Lime content is specified by percent of dry mass of soil. Two types of lime may be used in this procedure: (1) quicklime, which is in the dry state; and (2) hydrated lime (calcium hydroxide), which is a combination of lime and approximately 32 percent water.

14.2 *Quicklime Mass Determination*:

$$q_L = \frac{AB}{100} \quad (1)$$

where:

q_L = mass of quicklime, g
A = percent of lime for test, %
B = dry mass of soil (for this test 20.00 g)
100 = converts percent lime A to decimal form

14.3 *Hydrated Lime Mass Determination*:

$$q_L = \frac{1.32\ AB}{100} \quad (2)$$

where:

q_L = mass of hydrated lime, g
A = percent of lime for test, %
B = dry mass of soil (for this test 20.00 g)
1.32 = constant to account for the amount of water in hydrated lime
100 = converts percent lime A to decimal form

15. Report

15.1 The report is to consist of the completed "Soil-Lime pH Test" form (fig. 1).

15.2 All calculations are to show a checkmark.

7-2339 (2-86)
Bureau of Reclamation

SOIL-LIME pH TEST

Designation USBR 5875 - 89

PROJECT Example FEATURE Example

LOCATION Borrow Area QL DEPTH/ELEV. 1.0 – 10.0 ☐m ☒ft

SAMPLE NO. 1 TYPE OF LIME Quicklime

pH METER CALIBRATED WITH 7,14 BUFFER SOLUTION Standard DATE CALIBRATED 1 May 89

TESTED BY _____ DATE _____ COMPUTED BY _____ DATE _____ CHECKED BY _____ DATE _____

Container Number	13	12	11	10	9	8	7	6	5	4	3	2	1
MASS DETERMINATIONS													
Percent Lime (%)	0	1	2	3	4	5	6	7	8	9	10	11	12
Mass of soil (g)	20.00	20.00	20.00	20.00	20.00	20.00	20.00	20.00	20.00	20.00	20.00	20.00	20.00
Mass of Lime* (g)	0.0	0.20	0.40	0.60	0.80	1.00	1.20	1.40	1.60	1.80	2.00	2.20	2.40
MIXING													
Start time (24 hour clock)	1300	1304	1306	1310	1313	1318	1320	1323	1325	1328	1331	1335	1337
Completion time (24 hour clock)	1400	1404	1406	1410	1413	1418	1420	1423	1425	1428	1431	1435	1437

Beaker Number	26	25	24	23	22	21	20	19	18	17	16	15	14
pH readings	7.8 7.8	8.5 8.6	9.4 9.4	10.1 10.2	11.0 11.0	11.8 11.8	12.4 12.4	12.4 12.4	12.4 12.4	12.4 12.4	12.4 12.4	12.4 12.4	12.4 12.4
Average pH Reading	7.8	8.6	9.4	10.2	11.0	11.8	12.4	12.4	12.4	12.4	12.4	12.4	12.4

* Quicklime Computation

$$\text{Mass of lime} = \frac{\text{Percent lime} \times \text{Mass of soil}}{100.0}$$

* Hydrated Lime Computation

$$\text{Mass of lime} = \frac{1.32 \times (\text{Percent lime} \times \text{Mass of Soil})}{100.0}$$

Remarks: _____

GPO 850-018

Figure 1. – Soil-lime pH test — example.

UNITED STATES DEPARTMENT OF THE INTERIOR
BUREAU OF RECLAMATION

USBR 5890-89

PROCEDURE FOR

PREPARING LABORATORY BENTONITIC SLURRY SAMPLE

INTRODUCTION

This procedure is under the jurisdiction of the Geotechnical Services Branch, code D-3760, Research and Laboratory Services Division, Denver Office, Denver, Colorado. The procedure is issued under the fixed designation USBR 5890. The number immediately following the designation indicates the year of acceptance or the year of last revision.

1. Scope

1.1 This designation outlines the procedure for preparing a bentonitic slurry sample of known proportions for testing and evaluation in the laboratory.

2. Auxiliary Tests

2.1 The slurry sample produced by this procedure is used in laboratory studies of bentonitic slurries. Properties of the bentonitic slurry may be evaluated by any or all of a series of tests including designations USBR *3105, 5891, 5892, 5893, 5894, and 5895. All or part of this test series may be required as part of a bentonitic slurry evaluation program.

3. Applicable Documents

3.1 *USBR Procedures*:
USBR 1012 Calibrating Balances or Scales
USBR *3105 Hydrogen Ion Activity (pH) of Water and Water-Based Fluids
USBR 3900 Standard Definitions of Terms and Symbols Relating to Soil Mechanics
USBR 5891 Determining Coarse-Grained Portion of a Slurry by the Sand Content Test Method
USBR 5892 Determining Slurry Unit Weight by the Mud Balance Test Method
USBR 5893 Determining Slurry Filtration Characteristics by the Filter Press Test Method
USBR 5894 Determining Slurry Viscosity by the Marsh Funnel Test Method
USBR 5895 Determining Slurry Viscosity by the Viscometer Test Method

3.2 *API Recommended Practice.*-Standard Procedure for Testing Drilling Fluids, American Petroleum Institute, APIRP 13B, sec. 4, 1982.

4. Summary of Method

4.1 Bentonite, aggregate, chemical additives, and water are weighed and combined into various predetermined proportions in a mixer to form a bentonitic slurry sample.

* *Concrete Manual*, Bureau of Reclamation, part 2, in press.

5. Significance and Use

5.1 Bentonitic slurries of known properties are produced using this method. The properties of a slurry are studied for selection of the most desirable and economic combinations of bentonite, aggregates, and chemical additives to perform a specific function. Bentonitic slurries are commonly used to stabilize and seal soil during rotary drilling and sampling operations or slurry trench excavations. Bentonitic slurries produced—using this method—also may be used to model soil-slurry interaction and to compare properties of a bentonitic slurry of known proportions to one of unknown proportions.

6. Terminology

6.1 Definitions are in accordance with USBR 3900.

6.2 Terms not included in USBR 3900 specific to this designation are:

6.2.1 *Aggregate.*-Any materials held in suspension by slurry shear strength such as silt, sand, organic material, etc.

6.2.2 *Bentonitic Slurry.*-A mixture, primarily of water and bentonite, used in drilling or slurry trench construction that displays an initial shear strength and/or gains shear strength with time. The bentonitic slurry may or may not contain aggregate.

6.2.3 *Hydrate.*-To combine chemically with water.

7. Apparatus

7.1 The exact apparatus required for this procedure depends on the volume of bentonitic slurry to be mixed.

7.1.1 *Balance or Scale.*-A typical balance or scale used for this designation must be readable to 0.01 lbm and have a capacity of about 50 lbm.

7.1.2 *Mixer.*-High speed mixers capable of 11,000 to 17,000 r/min under load are preferred; however, by exercising care and allowing the bentonite to hydrate for longer times, lower speed mixers may prove satisfactory.

7.1.3 *Mixing Bowl.*-Of sufficient size to mix the desired sample without splashing the sample out of the mixing bowl.

7.1.4 *Weighing Pans.*-Used to contain bentonite, aggregate, and chemical additives while weighing.

7.1.5 *Bucket.*–Capable of being sealed when storing bentonitic slurry and large enough to contain water when weighing.

7.1.6 *Scoop.*–Of appropriate size to add bentonite, aggregate, and chemical additives to water.

8. Reagents and Materials

8.1 When a study of bentonitic slurries is being performed to model a specific project application, all materials including water, bentonite (brand and grade), chemical additives, and aggregate must be identical to those used on the project.

9. Precautions

9.1 *Safety Precautions.*–This designation may involve hazardous materials, operations, and equipment.

9.2 *Technical Precautions*:

9.2.1 When using low speed mixers, extra care is required to ensure that the bentonite and chemical additives mix thoroughly without forming lumps.

9.2.2 Source water, bentonite, chemical additives, and aggregate must be from the same source as the sample of unknown proportions if samples of known proportions are being mixed to compare with samples of unknown proportions.

10. Calibration and Standardization

10.1 The balance or scale used in this procedure is to be calibrated according to USBR 1012.

11. Conditioning

11.1 Slurry specimen temperature should not vary more than ±2 °C from the temperature of the source slurry.

11.2 Hydration time of bentonitic slurries depends on the method of mixing and the degree of dispersion of the bentonite. Generally, a hydration time of 16 hours is sufficient for laboratory samples produced using a low speed mixer.

12. Procedure

NOTE 1.–It is assumed—at this point in the procedure—that a bentonitic slurry mix has been specified and that the required masses of all components of that mix have been calculated in accordance with paragraph 13.

12.1 All data are to be recorded on the "Slurry Properties" form as shown on figure 1.

12.2 Place the predetermined amount of water in a clean bucket.

12.3 Place the predetermined amounts of bentonite, chemical additives, and aggregate in separate, clean pans.

12.4 Pour the water into the mixing bowl.

12.5 Start the mixer on the lowest speed and gradually increase to the highest speed possible without splashing the water out of the bowl.

12.6 Slowly add small amounts of bentonite into the water (while it is mixing) until all the bentonite has been added. The bentonite may form lumps if added too quickly.

12.7 Continue mixing the bentonite-water mixture for a minimum of 20 minutes or until no lumps remain in the mixture.

12.8 If chemical additives are to be used, they should be added to the bentonite-water mixture after the bentonite has been thoroughly dispersed and hydrated and while the mixer is running.

NOTE 2.–If a low speed mixer is used, the bentonite-water mixture should be allowed to stand for 16 hours after mixing to allow complete dispersion and hydration before the chemical additives are added to the mixture.

12.9 If aggregate is added to the bentonite-water or bentonite-water-chemical additive mixture, it may be added while manually agitating the fully hydrated bentonitic slurry or while mixing in an automatic mixer on low speed.

12.10 Pour the bentonitic slurry into a container of sufficient size. Seal the container to prevent evaporation of water.

12.11 Thoroughly wash and dry all equipment after each use.

13. Calculations

13.1 Mixed proportions of a laboratory-produced bentonitic slurry are typically stated in terms of percent of water mass.

Example: A 5-percent bentonite, 0.01-percent CMC [carboxymethyl cellulose (used to thicken or stabilize benonitic slurries)], and 20-percent sand mixture would contain 0.5 lbm bentonite, 0.001 lbm of CMC, and 2.0 lbm of sand for each 10 lbm of water.

13.2 To convert pounds mass to grams, multiply by 453.6 g/lbm.

14. Report

14.1 The report is to consist of a completed and checked "Slurry Properties" form (fig. 1).

14.2 All calculations are to show a checkmark.

14.3 Report the masses of materials actually used in mixing the sample and the actual mix proportions as a percent of the water mass used.

7-2341 (4-86)
Bureau of Reclamation

SLURRY PROPERTIES

Designation USBR 5890. 89

TABLE 1

SHEET 1 OF 1

PROJECT	FEATURE	LOCATION
Example		

TESTED BY	DATE	COMPUTED BY	DATE	CHECKED BY	DATE

IDENTIFICATION						TESTING																
											VISCOMETER TEST							FILTER PRESS TEST			
SAMPLE NO.	DATE	TIME	CONCENTRATION (%)	MIX NUMBER OR LOCATION	SLURRY TEMPERATURE (°C)	INITIAL SLURRY TEMPERATURE (°C)	UNIT WEIGHT MUD BALANCE (lbf/ft³)	pH	SAND CONTENT (% VOL.)	VISCOSITY MARSH FUNNEL (s)	(1) 600 r/min (lbf/100 ft²)	(2) 300 r/min (lbf/100 ft²)	(3) AV APPARENT (cP) VISCOSITY*	(4) PV PLASTIC (cP) VISCOSITY*	(5) YP YIELD POINT* (lbf/100 ft²)	(6) INITIAL GEL STRENGTH (lbf/100 ft²)	(7) 10-MIN GEL STRENGTH (lbf/100 ft²)	FILTRATE LOSS (mL)	THICKNESS (mm)	** CONSISTENCY	FINAL SLURRY TEMPERATURE (°C)
1	12-8	10:00	5	MIX #1	21°																21°

REMARKS: Mix #1 - 10 lbm water, 0.5 lbm bentonite, 2.0 lbm sand (5% bentonite, 20% sand)

*FORMULAS:
(3) AV = (1)/2
(4) PV = (1)-(2)
(5) YP = (2)-(4)

*These formulas apply only to the Fann viscometer with R1, B1, and F1 combinations.

** SOFT = S FIRM = F HARD = H

GPO 850-598

Figure 1. - Slurry properties — example.

UNITED STATES DEPARTMENT OF THE INTERIOR
BUREAU OF RECLAMATION

USBR 5891-89

PROCEDURE FOR

DETERMINING COARSE-GRAINED PORTION OF A SLURRY BY THE SAND CONTENT TEST METHOD

INTRODUCTION

This procedure is under the jurisdiction of the Geotechnical Services Branch, code D-3760, Research and Laboratory Services Division, Denver Office, Denver, Colorado. The procedure is issued under the fixed designation USBR 5891. The number immediately following the designation indicates the year of acceptance or the year of last revision.

1. Scope

1.1 This designation outlines the procedure for determining the coarse-grained portion of a water-based, slurry mixture using the sand content test.

1.2 The procedure is used to determine the volume (in percent) of sand in slurries and drilling fluids. This procedure is essentially the same as the API (American Petroleum Institute) Recommended Practice 13B, 1982, but it has been expanded to form a more complete procedure.

2. Auxiliary Tests

2.1 A representative slurry sample must be produced in the laboratory in accordance with USBR 5890 or acquired in the field using a sampler capable of collecting a sufficient volume of slurry from a desired location or depth. Field samplers vary according to application and construction requirements; therefore, prior approval of any field sampler must be obtained on a case-by-case basis.

2.2 The sand content test is usually one of a series of tests designed to evaluate the properties of a slurry. Included in this test series are designations USBR *3105, 5890, 5892, 5893, 5894, and 5895. All or part of this test series may be required as a part of a slurry evaluation program.

2.3 Temperature readings of the slurry are taken to the nearest 0.5 °C upon sampling and at the beginning and conclusion of the complete test series. Temperatures of individual test specimens are not required if tests are performed simultaneously or sequentially.

3. Applicable Documents

3.1 *USBR Procedures*:

USBR *3105 Hydrogen Ion Activity (pH) of Water and Water-Based Fluids

USBR 3900 Standard Definitions of Terms and Symbols Relating to Soil Mechanics

USBR 5890 Preparing Laboratory Bentonitic Slurry Sample

USBR 5892 Determining Slurry Unit Weight by the Mud Balance Test Method

USBR 5893 Determining Slurry Filtration Characteristics by the Filter Press Test Method

USBR 5894 Determining Slurry Viscosity by the Marsh Funnel Test Method

USBR 5895 Determining Slurry Viscosity by the Viscometer Test Method

3.2 *API Recommended Practice.*–Standard Procedure for Testing Drilling Fluids, American Petroleum Institute, APIRP 13B, sec. 4, 1982.

4. Summary of Method

4.1 The measuring tube (fig. 1) is filled with slurry and water to the appropriate mark and is shaken. The mixture is poured onto a U.S.A. Standard series No. 200 mesh (75 μm) sieve and the minus No. 200 material is washed gently through the sieve. The funnel is fitted over the top of the sieve; the tip of the funnel is inserted into the measuring tube, and the assembly inverted. All material retained on the sieve is washed from the sieve into the graduated tube and is read directly as percent sand by volume.

5. Significance and Use

5.1 This procedure is used to determine the amount of coarse-grained material in a water-based bentonitic slurry. The range of measurement is too limited for use in slurry-cement wall construction.

6. Terminology

6.1 Definitions are in accordance with USBR 3900.

6.2 Terms not included in USBR 3900 specific to this designation are:

6.2.1 *Slurry.*–Any fluid used in drilling or slurry trench construction that displays an initial shear strength and/or gains shear strength with time. The slurry may or may not contain aggregate.

6.2.2 *Aggregate.*–Any material held in suspension by slurry shear strength such as silt, sand, organic material, etc.

*. *Concrete Manual*, Bureau of Reclamation, part 2, in press.

7. Apparatus

7.1 *Sand Content Set* (fig. 1):

7.1.1 *Sieve.*–U.S.A. Standard series No. 200 mesh (75 μm), 2-1/2-inch (63-mm) diameter.

7.1.2 *Funnel.*–Funnel to fit the sieve and the measuring tube.

7.1.3 *Measuring Tube.*–Transparent tube (usually glass) marked from 0 to 20 percent by volume in 1 percent graduations.

NOTE 1.–The volume of coarse-grained material, including void spaces between grains, is measured and expressed as percent (by volume) of slurry.

8. Precautions

8.1 *Safety Precautions*:

8.1.1 This designation may involve hazardous materials, operations, and equipment.

8.2 The measuring tube often is made of glass. Care must be taken when handling wet glass and storing it when not in use.

9. Calibration and Standardization

9.1 The apparatus is manufactured in such a manner that calibration is not required. Any equipment that appears to be damaged should be replaced.

10. Conditioning

10.1 Slurry specimen temperature should not vary more than ±2 °C from the temperature of the source slurry.

10.2 Tapwater may be used as wash water.

11. Procedure

11.1 All data are to be recorded on the "Slurry Properties" form as shown on figure 2.

11.2 Fill the measuring tube with slurry, using the representative sample obtained in subparagraph 2.1, to the mark labeled *mud to here.*

11.3 Add water to the next mark labeled *water to here.*

11.4 Place thumb or finger over the mouth of the tube and shake the tube vigorously.

11.5 Wet the No. 200-mesh (75 μm) sieve.

11.6 Pour the water-slurry mixture from the measuring tube onto the clean, wet No. 200-mesh (75 μm) sieve.

11.7 Discard the liquid that passes through the sieve.

11.8 Add more water to the measuring tube, shake the tube, and again pour the water onto the sieve. Continue this step until the measuring tube is clean.

11.9 Wash the material retained on the sieve to remove any remaining fine-grained [minus No. 200 (4.75 mm) sieve size] material.

11.10 Attach the funnel upside down over the top of the sieve.

11.11 Insert the tip of the funnel into the mouth of the empty measuring tube and carefully invert the assembly.

11.12 With a fine spray of water, wash the material retained on the sieve into the measuring tube.

11.13 Allow the coarse-grained material to settle.

11.14 Read the coarse-grained material volume directly from the graduations on the tube as the percent of slurry volume originally used in subparagraph 11.2. Record the percent of coarse-grained material to the nearest 1 percent in the column labeled *Sand content (% vol.)* as shown on figure 2.

11.15 Thoroughly wash and dry all equipment after each use.

12. Calculations

12.1 Not applicable; calculations are not required for this procedure.

13. Report

13.1 The report is to consist of a completed and checked "Slurry Properties" form (fig. 2).

Sieve No. 200 mesh. Funnel. Measuring tube.

Figure 1. – Sand content set.

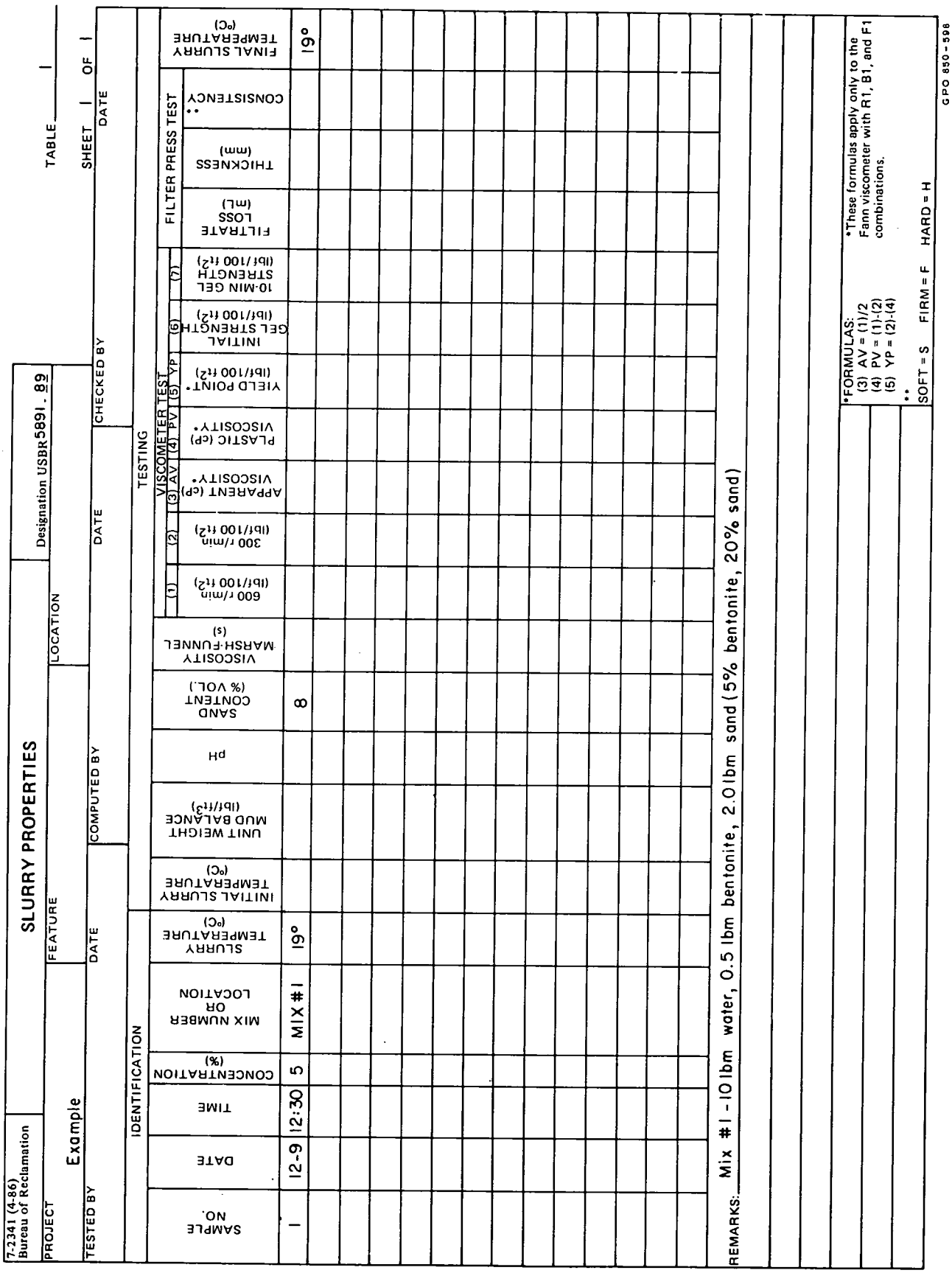

Figure 2. – Slurry properties — example.

UNITED STATES DEPARTMENT OF THE INTERIOR
BUREAU OF RECLAMATION

USBR 5892-89

PROCEDURE FOR

DETERMINING SLURRY UNIT WEIGHT BY THE MUD BALANCE TEST METHOD

INTRODUCTION

This procedure is under the jurisdiction of the Geotechnical Services Branch, code D-3760, Research and Laboratory Services Division, Denver Office, Denver, Colorado. The procedure is issued under the fixed designation USBR 5892. The number immediately following the designation indicates the year of acceptance or the year of last revision.

1. Scope

1.1 This designation outlines the procedure for determining the unit weight of a slurry by the mud balance test method.

1.2 The procedure is used for determining the unit weight of slurry muds and drilling fluids, but it is applicable to most fluids. This procedure is essentially the same as the API (American Petroleum Institute) Recommended Practice 13B, 1982, but it has been expanded to form a more complete procedure.

2. Auxiliary Tests

2.1 A representative slurry sample must be produced in the laboratory in accordance with USBR 5890 or acquired in the field using a sampler capable of collecting a sufficient volume of slurry from a desired location or depth. Field samplers vary according to application and construction requirements; therefore, prior approval of any field sampler must be obtained on a case-by-case basis.

2.2 The mud balance test is usually one of a series of tests designed to evaluate the properties of a slurry. Included in this test series are designations USBR *3105, 5890, 5891, 5893, 5894, and 5895. All or part of this test series may be required as part of a slurry evaluation program.

2.3 Temperature readings of the slurry are taken to the nearest 0.5 °C upon sampling and at the beginning and conclusion of the complete test series. Temperatures of individual test specimens are not required if tests are performed simultaneously or sequentially.

3. Applicable Documents

3.1 *USBR Procedures*:
USBR *3105 Hydrogen Ion Activity (pH) of Water and Water-Based Fluids
USBR 3900 Standard Definitions of Terms and Symbols Relating to Soil Mechanics
USBR 5890 Preparing Laboratory Bentonitic Slurry Sample
USBR 5891 Determining Coarse-Grained Portion of a Slurry by the Sand Content Test Method
USBR 5893 Determining Slurry Filtration Characteristics by the Filter Press Test Method
USBR 5894 Determining Slurry Viscosity by the Marsh Funnel Test Method
USBR 5895 Determining Slurry Viscosity by the Viscometer Test Method

3.2 *ASTM Standard*:
E 1 ASTM Thermometers

3.3 *API Recommended Practice.*–Standard Procedure for Testing Drilling Fluids, American Petroleum Institute, APIRP 13B, sec. 1, 1982.

4. Summary of Method

4.1 The mass of a fixed volume of slurry is determined by balancing it against the mass of a fixed counterweight and a rider weight on a crossbeam. The rider weight is slid along the crossbeam until the point of balance is reached. The density of the slurry is read at the position on the graduated scale of the crossbeam at which the rider weight rests at the point of balance. The density is then converted to unit weight.

5. Significance and Use

5.1 This test method provides a means to determine the unit weight of a slurry. The unit weight of a slurry is an indicator of slurry mix proportions and is used to calculate hydraulic pressure applied to the side walls of a slurry trench or drill hole. In slurry trench construction, a maximum weight of slurry is often specified to ensure displacement of the slurry by selected backfill.

6. Terminology

6.1 Definitions are in accordance with USBR 3900.

6.2 Terms not included in USBR 3900 specific to this designation are:

* *Concrete Manual*, Bureau of Reclamation, part 2, in press.

6.2.1 *Slurry.*–Any fluid used in drilling or slurry trench construction that displays an initial shear strength and/or gains shear strength with time. The slurry may or may not contain aggregate.

6.2.2 *Aggregate.*–Any material held in suspension by slurry shear strength such as silt, sand, organic material, etc.

7. Apparatus

7.1 *Mud Balance.*–The mud balance is the instrument most commonly used to determine the density of slurries (fig. 1). The mud balance consists of a cup fixed to one end of a beam that has a counterweight on the other end and a rider weight that can be slid along the crossbeam. A graduated scale is etched into the beam. When the cup is filled with slurry, balance is achieved by sliding the rider weight along the beam until a level bubble mounted on the beam is centered. Attachments for extending the range of the mud balance may be used for dense fluids.

7.2 *Thermometer.*–0 to 50 °C, 0.5 °C divisions, conforming to requirements of ASTM E 1.

8. Precautions

8.1 *Safety Precautions.*–This designation may involve hazardous materials, operations, and equipment.

9. Calibration and Standardization

9.1 The mud balance should be calibrated weekly using clean, fresh distilled water. Distilled water should indicate a reading of 62.4 lbm/ft^3 at 70 °F (1.00 g/cm^3 at 21 °C). If it does not, adjust the balancing screw or the amount of lead shot in the well (counterweight) as required to obtain this reading.

10. Conditioning

10.1 Slurry specimen temperature should not vary by more than ±2 °C from the temperature of the slurry source.

11. Procedure

11.1 All data are to be recorded on the "Slurry Properties" form as shown on figure 2.

11.2 Set the instrument support on a stable, level surface.

11.3 Fill the clean, dry cup with slurry from the sample prepared in accordance with subparagraph 2.1. Place the cap on the cup and rotate the cap until firmly seated. Make sure some of the slurry is expelled through the hole in the cap so that air or gas is not trapped.

11.4 Wash and wipe excess fluid from the outside of the cup and then dry.

11.5 Place the beam on the support and balance it by moving the rider weight along the crossbeam with graduated scale. The beam is balanced when the leveling bubble is evenly divided by the centerline.

11.6 Read the density of the slurry on the beam at the side of the rider weight nearest the cup. Convert the density to unit weight using the equations in subparagraph 12.2 and record the unit weight to the nearest 0.5 lbf/ft^3 (0.01 kN/m^3) as shown on figure 2. Make appropriate corrections if the range extender is used.

11.7 Measure and record the slurry temperature to the nearest 0.5 °C in accordance with subparagaph 2.3.

11.8 Thoroughly wash and dry all instruments after each use.

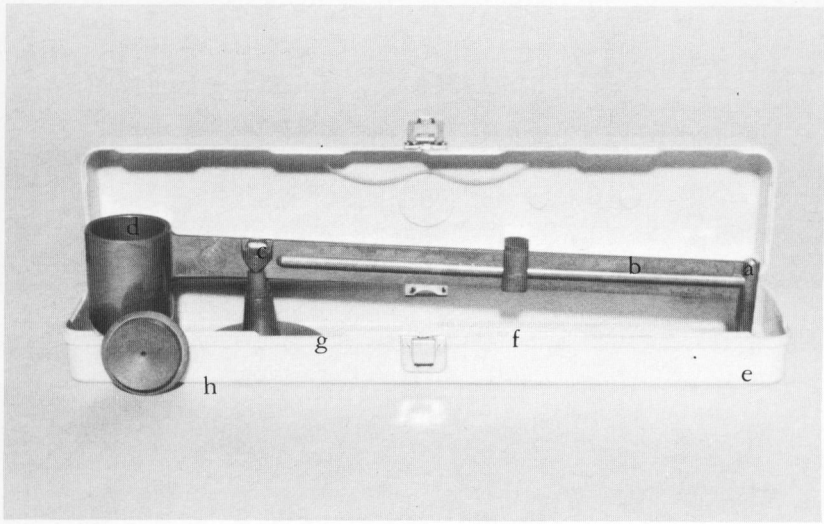

Figure 1. – Mud balance. (a) retainer screw, (b) beam (with etched scale), (c) level bubble, (d) cup, (e) counter weight, (f) rider weight, (g) support, and (h) cap.

12. Calculations

12.1 To convert density from g/cm³ to other density units of measure, use the expressions:

$$\frac{g}{cm^3} = \text{specific gravity (numerically)}$$

$$62.4 \left(\frac{g}{cm^3}\right) = \left(\frac{lbm}{ft^3}\right)$$

$$8.314 \left(\frac{g}{cm^3}\right) = \left(\frac{lbm}{gal}\right)$$

12.2 To convert density to unit weight, use the expressions:

$$1.0 \left(\frac{lbm}{ft^3}\right) = 1.0 \left(\frac{lbf}{ft^3}\right)$$

$$1.0 \left(\frac{lbm}{gal}\right) = 1.0 \left(\frac{lbf}{gal}\right)$$

$$9.8067 \left(\frac{g}{cm^3}\right) = 1.0 \left(\frac{kN}{m^3}\right)$$

NOTE 1.–In the last conversion, three constants are combined into one. Density in g/m³ is multiplied by 1000 to convert to kg/m³; that number is multiplied by the acceleration of gravity, g (9.8067 m/s²) to convert density in kg/m³ to unit weight in N/m³. The resulting value is then divided by 1000 to convert to kN/m³.

13. Report

13.1 The report is to consist of a completed and checked "Slurry Properties" form (fig. 2).

13.2 All calculations are to show a checkmark.

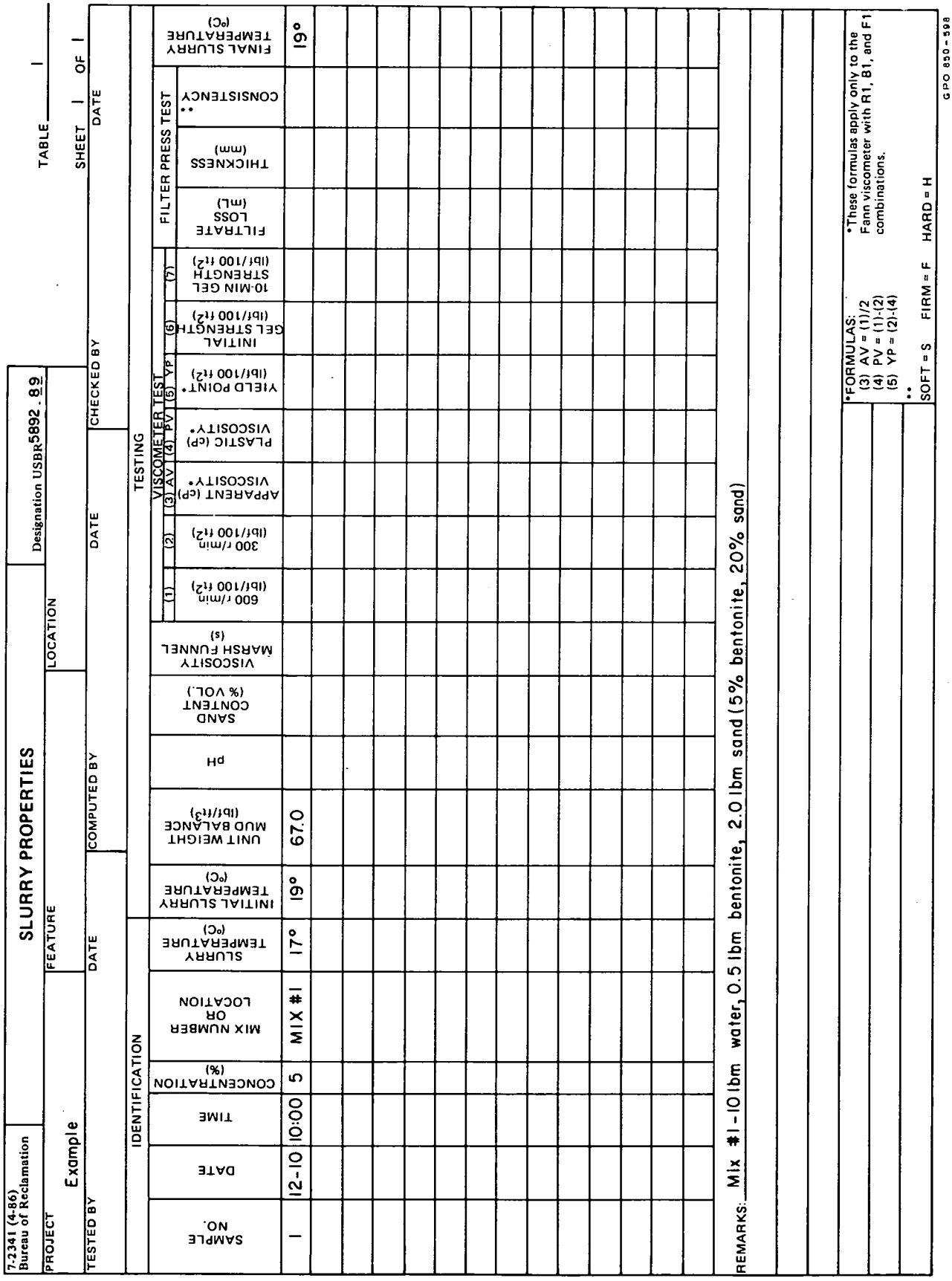

Figure 2. – Slurry properties — example.

UNITED STATES DEPARTMENT OF THE INTERIOR
BUREAU OF RECLAMATION

USBR 5893-89

PROCEDURE FOR

DETERMINING SLURRY FILTRATION CHARACTERISTICS BY THE FILTER PRESS TEST METHOD

INTRODUCTION

This procedure is under the jurisdiction of the Geotechnical Services Branch, code D-3760, Research and Laboratory Services Division, Denver Office, Denver, Colorado. The procedure is issued under the fixed designation USBR 5893. The number immediately following the designation indicates the year of acceptance or the year of last revision.

1. Scope

1.1 This designation outlines the procedure for determining the filter cake characteristics (thickness and consistency) and fluid loss caused by forcing a slurry through a porous media.

1.2 The procedure is used to evaluate the ability of a slurry mud or a drill fluid to form a seal on a standard filter paper while subjected to a predetermined pressure for a given time duration. This procedure is essentially the same as the API (American Petroleum Institute) Recommended Practice 13B, 1982, but it has been expanded to form a more complete procedure.

2. Auxiliary Tests

2.1 A representative slurry sample must be produced in the laboratory in accordance with USBR 5890 or acquired in the field using a sampler capable of collecting a sufficient volume of slurry from a desired location or depth. Field samplers vary according to application and construction requirements; therefore, prior approval of any field sampler must be obtained on a case-by-case basis.

2.2 The filter press test is usually one of a series of tests designed to evaluate the properties of a slurry. Included in this test series are designations USBR *3105, 5890, 5891, 5892, 5894, and 5895. All or part of this test series may be required as part of a slurry evaluation program.

2.3 Temperature readings of the slurry are taken to the nearest 0.5 °C upon sampling and at the beginning and conclusion of the complete test series. Temperatures of individual test specimens are not required if tests are performed simultaneously or sequentially.

3. Applicable Documents

3.1 *USBR Procedures*:
USBR 1040 Calibrating Pressure Gauges
USBR *3105 Hydrogen Ion Activity (pH) of Water and Water-Based Fluids
USBR 3900 Standard Definitions of Terms and Symbols Relating to Soil Mechanics
USBR 5890 Preparing Laboratory Bentonitic Slurry Sample
USBR 5891 Determining Coarse-Grained Portion of a Slurry by the Sand Content Test Method
USBR 5892 Determining Slurry Unit Weight by the Mud Balance Test Method
USBR 5894 Determining Slurry Viscosity by the Marsh Funnel Test Method
USBR 5895 Determining Slurry Viscosity by the Viscometer Test Method

3.2 *ASTM Standard*:
E 1 ASTM Thermometers

3.3 *API Recommended Practice.*–Standard Procedure for Testing Drilling Fluids, American Petroleum Institute, APIRP 13B, sec. 1, 1982.

4. Summary of Method

4.1 The slurry to be tested is placed into a sealable chamber which has a porous filter paper covering an opening at the bottom and a pressure source connected to the top. A specified pressure is applied to the top of the slurry which forces the slurry to flow through the porous filter and form a cake on the surface of the porous filter. The cake lowers the permeability of the porous filter and limits the amount of slurry that can be expelled from the chamber during a specified time interval.

5. Significance and Use

5.1 In the case of a bentonitic slurry, results from this test serve as indicators of the degree of hydration of the mixture and of sealing capabilities of different slurries.

5.2 In the case of a cement-bentonite slurry, test results are indicative of potential change in cement-water ratio during the construction process.

6. Terminology

6.1 Definitions are in accordance with USBR 3900.

6.2 Terms not included in USBR 3900 specific to this designation are:

* *Concrete Manual*, Bureau of Reclamation, part 2, in press.

6.2.1 *Slurry.*–Any fluid used in drilling or slurry trench construction that displays an initial shear strength and/or gains shear strength with time. The slurry may or may not contain aggregate.

6.2.2 *Aggregate.*–Any material held in suspension by slurry shear strength such as silt, sand, organic material, etc.

7. Apparatus

7.1 *Filter Press* (fig. 1):

7.1.1 *Mud Chamber.*–A metal cylinder having an inside diameter of 3.0 inches and a height of 2-1/2 inches (76 by 64 mm). This high-pressure chamber is manufactured of materials resistant to strongly alkaline solutions.

7.1.2 *Top Cap.*–A circular metal cap designed to fit on one end of the mud chamber. The top cap is fitted in a manner to allow pressure to be applied into the chamber through the top cap and released from the pressure relief valve. A gasket between the top cap and mud chamber provides a tight seal.

7.1.3 *Base Cap.*–A circular metal cap designed to fit on one end of the mud chamber. Filter paper (90 mm in diameter) should be placed on a metal support screen which is placed in the base cap. The base cap should allow a filtration area of 7.1±0.1 in^2 (45.8±0.6 cm^2) and be fitted with a filtrate tube. A gasket between the base cap and the mud chamber provides a tight seal.

7.1.4 *Stand.*–A stand to support the mud chamber, base cap, and top cap, and which clamps the mud chamber and base caps together by means of a threaded T-screw.

7.1.5 *Graduated Cylinder.*–Glass, 10 or 25 mL, 0.1 mL divisions.

7.1.6 *Pressure Source.*–A nonhazardous gas used to pressurize the mud chamber. Compressed gas cylinders equipped with pressure regulators and fittings can be used as a pressure source.

7.1.7 *Filter Paper.*–Whatman, No. 50, S&S No. 576, or equivalent must be used.

7.2 *Timer.*–A 30-minute clock, accurate within 1.0 second.

7.3 *Thermometer.*–0 to 50 °C, 0.5 °C divisions, conforming to requirements of ASTM E 1.

7.4 *Linear Scale.*–A scale 100-mm long, 1.0 mm divisions.

8. Precautions

8.1 *Safety Precautions*:

8.1.1 This designation may involve hazardous materials, operations, and equipment.

8.1.2 Cylinders of compressed gas should always be firmly secured and kept in a cool place to lessen the danger of explosion.

8.1.3 Keep the lengths of all pressurized hoses to a minimum, and wear safety glasses when hoses are pressurized.

8.1.4 Cylinders should have adequate, firm support to prevent them from tipping or falling.

9. Calibration and Standardization

9.1 The apparatus is manufactured so that calibration is not required. Any equipment that appears to be damaged should be replaced.

9.2 The pressure gauge must be calibrated in accordance with USBR 1040.

10. Conditioning

10.1 Slurry specimen temperature should not vary more than ±2 °C from the temperature of the slurry source.

11. Procedure

11.1 All data are to be recorded on the "Slurry Properties" form as shown on figure 2.

11.2 Be sure each part of the filter apparatus, particularly the screen, is clean and dry and the gaskets are not distorted or worn.

11.3 Place gaskets on base cap and top cap.

11.4 Place a clean, unused filter paper on the support screen. Insert filter paper and support screen into base cap. Secure and tighten base cap to mud chamber making sure the gasket forms an even seal between the base cap and the mud chamber.

11.5 Fill the mud chamber to within 1/4 inch (6 mm) of the top with slurry prepared in accordance with USBR 5890. Secure and tighten the top cap to the mud chamber making sure the gasket forms an even seal between the top cap and the mud chamber.

11.6 Set the assembled chamber in the stand and secure it to the stand with the T-screw.

11.7 Place a clean, dry, 10- or 250-mL graduated cylinder under the filtrate tube.

11.8 Set the timer for 30 minutes.

11.9 Close the pressure relief valve and adjust the pressure regulator so that a supply pressure of 100±5 lbf/in^2 (690±35 kPa) is applied in 30 seconds or less. Other supply pressures may be used depending on the requirements for a specific situation. The test period begins at the time the required pressure is achieved.

11.10 Start the timer and make sure pressure is applied for the entire 30 minutes.

11.11 At the end of 30 minutes measure the volume of filtrate; record to the nearest 0.1 mL as shown on figure 2.

11.12 Decrease the supply pressure to zero with the pressure regulator.

11.13 Carefully open the pressure relief valve to depressurize the mud chamber. Unwind the T-screw and remove the mud chamber from the stand. Remove the top cap and measure and record the slurry temperature to the nearest 0.5 °C in accordance with subparagraph 2.3. Discard the slurry. Disassemble the chamber using

extreme care to save the filter paper with a minimum of disturbance to the filter cake.

11.14 Wash excess slurry from the filter cake with a gentle stream of water. Measure and record to the nearest 0.5 mm the thickness of the filter cake (fig. 2).

11.15 Evaluate and record the filter cake consistency. Although standard descriptions are virtually impossible, such notations as hard, firm, soft, etc., may convey some idea of cake consistency.

12. Calculations

12.1 Not applicable; calculations are not required for this procedure.

13. Report

13.1 The report is to consist of a completed and checked "Slurry Properties" form (fig. 2).

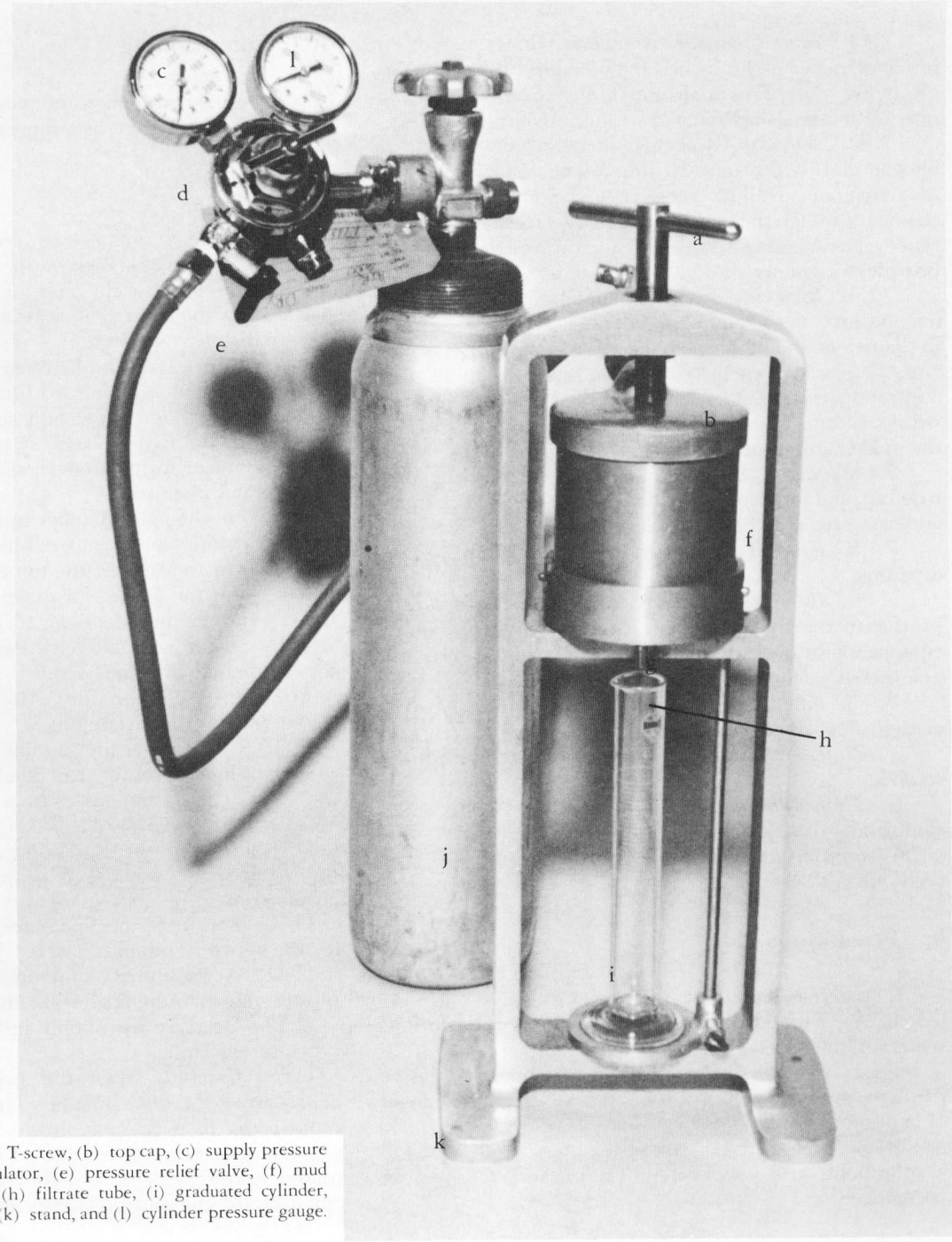

Figure 1. – Filter press. (a) T-screw, (b) top cap, (c) supply pressure gauge, (d) pressure regulator, (e) pressure relief valve, (f) mud chamber, (g) base cap, (h) filtrate tube, (i) graduated cylinder, (j) compressed air tank, (k) stand, and (l) cylinder pressure gauge.

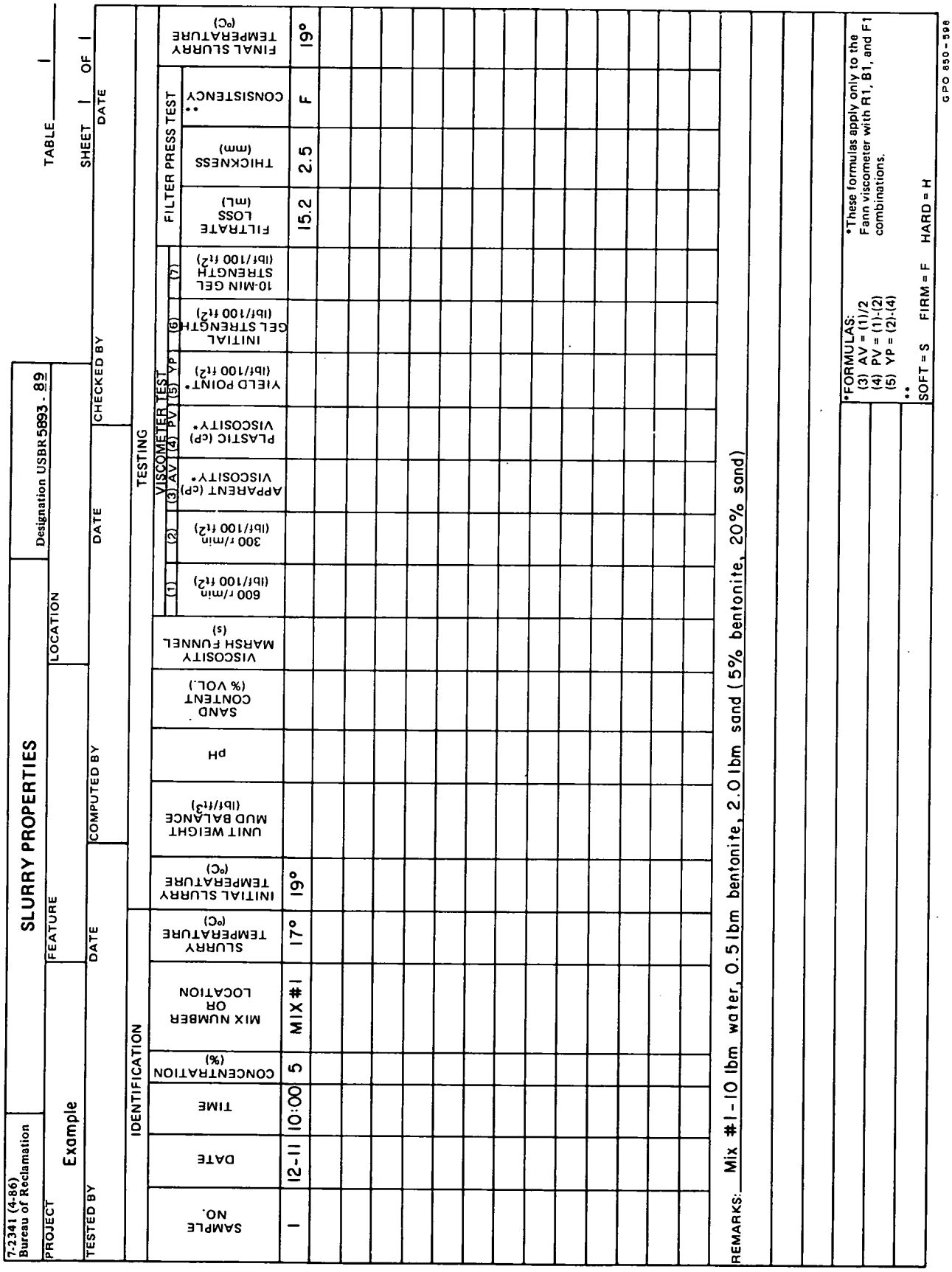

7-2341 (4-86) Bureau of Reclamation

SLURRY PROPERTIES

Designation USBR 5893 - 89

TABLE 1

PROJECT Example | FEATURE | LOCATION

TESTED BY | DATE | COMPUTED BY | DATE | CHECKED BY | DATE

SHEET 1 OF 1

| IDENTIFICATION | | | | TESTING | | | |

UNITED STATES DEPARTMENT OF THE INTERIOR
BUREAU OF RECLAMATION

USBR 5894-89

PROCEDURE FOR

DETERMINING SLURRY VISCOSITY BY THE MARSH FUNNEL TEST METHOD

INTRODUCTION

This procedure is under the jurisdiction of the Geotechnical Services Branch, code D-3760, Research and Laboratory Services Division, Denver Office, Denver, Colorado. The procedure is issued under the fixed designation USBR 5894. The number immediately following the designation indicates the year of acceptance or the year of last revision.

1. Scope

1.1 This designation outlines the procedure for determining the viscosity of a slurry by the Marsh funnel test method.

1.2 The procedure is used for determining the viscosity of slurry muds and drilling fluids, but it is applicable to most fluids. The procedure is essentially the same as the API (American Petroleum Institute) Recommended Practice 13B, 1982, but it has been expanded to form a more complete procedure.

2. Auxiliary Tests

2.1 A representative slurry sample must be produced in the laboratory in accordance with USBR 5890 or acquired in the field using a sampler capable of collecting a sufficient volume of slurry from a desired location or depth. Field samplers vary according to application and construction requirements; therefore, prior approval of any field sampler must be obtained on a case-by-case basis.

2.2 The Marsh funnel test is usually one of a series of tests designed to evaluate the properties of a slurry. Included in this test series are designations USBR *3105, 5890, 5891, 5892, 5893, and 5895. All or part of this test series may be required as part of a slurry evaluation program.

2.3 Temperature readings of the slurry are taken to the nearest 0.5 °C upon sampling and at the beginning and conclusion of the complete test series. Temperatures of individual test specimens are not required if tests are performed simultaneously or sequentially.

3. Applicable Documents

3.1 *USBR Procedures*:
USBR *3105 Hydrogen Ion Activity (pH) of Water and Water-Based Fluids
USBR 3900 Standard Definitions of Terms and Symbols Relating to Soil Mechanics
USBR 5890 Preparing Laboratory Bentonitic Slurry Sample
USBR 5891 Determining Coarse-Grained Portion of a Slurry by the Sand Content Test Method
USBR 5892 Determining Slurry Unit Weight by the Mud Balance Test Method
USBR 5893 Determining Slurry Filtration Characteristics by the Filter Press Test Method
USBR 5895 Determining Slurry Viscosity by the Viscometer Test Method

3.2 *ASTM Standard*:
E 1 ASTM Thermometers

3.3 *API Recommended Practice.*–Standard Procedure for Testing Drilling Fluids, American Petroleum Institute, APIRP 13B, sec. 1, 1982.

4. Summary of Method

4.1 A funnel of standard dimensions, known as the Marsh funnel, is sealed at the bottom while being filled to a marked level. The bottom is then unsealed and the fluid allowed to drain into a graduated cup. The time (in seconds) required for one U.S. liquid quart (946 mL) of fluid to drain from the funnel is known as the Marsh funnel viscosity.

5. Significance and Use

5.1 This test method provides a means to determine the Marsh funnel viscosity of a slurry. The Marsh funnel viscosity is an indicator of the slurry shear strength and density. In slurries and drilling fluids, minimum and maximum viscosities are often specified so that proper suspension of solids is maintained while the slurries still retain the capacity to be pumped.

6. Terminology

6.1 Definitions are in accordance with USBR 3900.

6.2 Terms not included in USBR 3900 specific to this designation are:

6.2.1 *Slurry.*–Any fluid used in drilling or slurry trench construction that displays an initial shear strength

* *Concrete Manual*, Bureau of Reclamation, part 2, in press.

and/or gains shear strength with time. The slurry may or may not contain aggregate.

6.2.2 *Aggregate*–Any material held in suspension by slurry shear strength such as silt, sand, organic material, etc.

7. Apparatus

7.1 *Marsh Funnel.*–A funnel, with attached screen, dimensioned so that when standard procedures are followed the outflow time of one U.S. liquid quart (946 mL) of fresh water is 26±0.5 seconds at 70±5 °F (21±3 °C) (fig. 1).

7.2 *Graduated Cup.*–A cup or bottle having a minimum capacity of one U.S. liquid quart (946 mL) and marked at that volume.

7.3 *Thermometer.*–0 to 50 °C, 0.5 °C divisions, conforming to requirements of ASTM E 1.

7.4 *Timer.*–A 30-minute clock, accurate within 1.0 second.

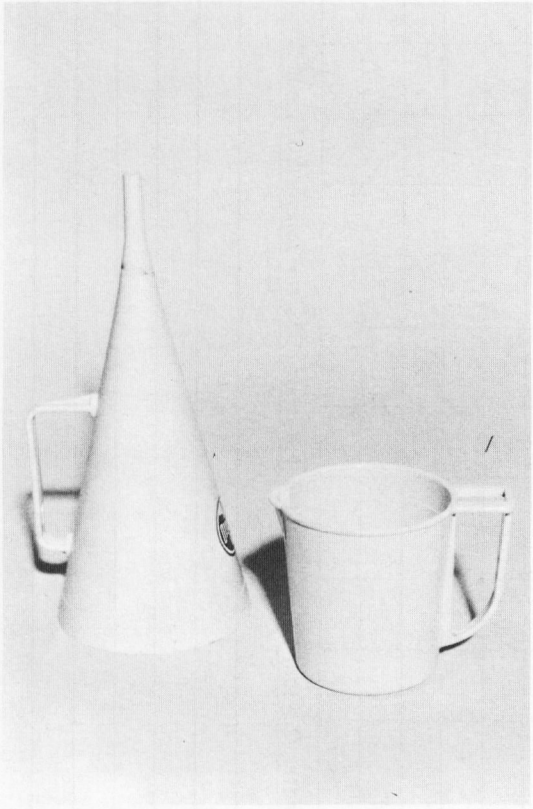

Figure 1. – Marsh funnel and graduated cup.

8. Precautions

8.1 *Safety Precautions.*–This designation may involve hazardous materials, operations, and equipment.

9. Calibration and Standardization

9.1 The Marsh funnel should be checked periodically using distilled water. If an outflow time of 26±0.5 seconds, for 1.0 U.S. liquid quart (946 mL), is not obtained for distilled water [at 70±5 °F (21±3 °C)] the Marsh funnel should be replaced.

10. Conditioning

10.1 The sample of slurry should be prepared and thoroughly mixed in accordance with USBR 5890 immediately prior to performing the Marsh funnel procedure.

10.2 Slurry specimen temperature should not vary more than ±2 °C from the temperature of the slurry source.

11. Procedure

11.1 All data are to be recorded on the "Slurry Properties" form as shown on figure 2.

11.2 Cover the orifice of the Marsh funnel with a finger and pour the slurry sample (prepared in accordance with USBR 5890) through the screen into the clean, dry, funnel until the fluid level reaches the bottom of the screen.

11.3 Hold the funnel over the graduated cup and quickly remove the finger from the orifice. Determine the time required for the fluid to fill the graduated cup to the 1.0-U.S. liquid quart mark (946-mL).

11.4 Record the time to the nearest second.

11.5 Measure and record the slurry temperature to the nearest 0.5 °C in accordance with subparagraph 2.3.

11.6 Wash all remaining fluid from the Marsh funnel and graduated cup, and dry each thoroughly.

12. Calculations

12.1 The measured time in this procedure is the Marsh funnel viscosity.

13. Report

13.1 The report is to consist of a completed and checked "Slurry Properties" form (fig. 2).

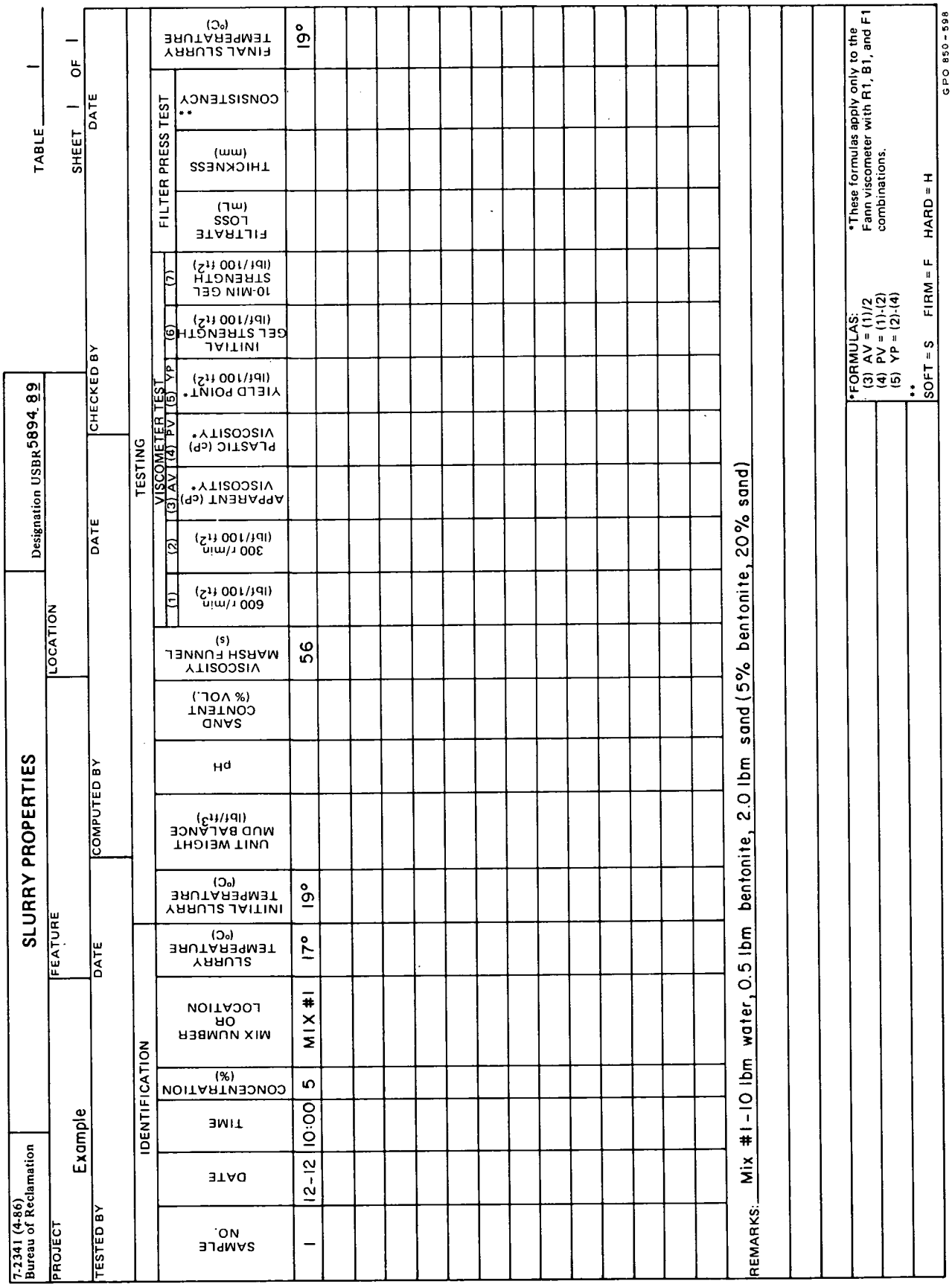

Figure 2. - Slurry properties — example.

UNITED STATES DEPARTMENT OF THE INTERIOR
BUREAU OF RECLAMATION

USBR 5895-89

PROCEDURE FOR

DETERMINING SLURRY VISCOSITY BY THE VISCOMETER TEST METHOD

INTRODUCTION

This procedure is under the jurisdiction of the Geotechnical Services Branch, code D-3760, Research and Laboratory Services Division, Denver Office, Denver, Colorado. The procedure is issued under the fixed designation USBR 5895. The number immediately following the designation indicates the year of acceptance or the year of last revision.

1. Scope

1.1 This designation outlines the procedure for determining the viscosity of a slurry by the viscometer test method.

1.2 The procedure is used to determine the flow properties of slurry muds and drilling fluids but it is applicable to most noncorrosive fluids. The procedure is essentially the same as the API (American Petroleum Institute) Recommended Practice 13B, 1982, but it has been expanded to form a more complete procedure.

1.3 This procedure includes the use of Fann Models 35 and HC34A viscometers with an R1 rotating sleeve, B1 inner bob, and F1 torsion spring; therefore, the designation is in the context of their operation. For tests performed using other configurations or with other viscometers or rheometers, check the manufacturer's literature for proper operating procedures and calculations required to determine proper readings and values to be recorded on the data form.

2. Auxiliary Tests

2.1 A representative slurry sample must be produced in the laboratory in accordance with USBR 5890 or acquired in the field using a sampler capable of collecting a sufficient volume of slurry from a desired location or depth. Field samplers vary according to application and construction requirements; therefore, prior approval of any field sampler must be obtained on a case-by-case basis.

2.2 The viscometer test is usually one of a series of tests designed to evaluate the properties of a slurry. Included in this test series are designations USBR *3105, 5890, 5891, 5892, 5893, and 5894. All or part of this test series may be required as part of a slurry evaluation program.

2.3 Temperature readings of the slurry are taken to the nearest 0.5 °C upon sampling and at the beginning and conclusion of the complete test series. Temperatures of individual test specimens are not required if tests are performed simultaneously or sequentially.

* *Concrete Manual*, Bureau of Reclamation, part 2, in press.

3. Applicable Documents

3.1 *USBR Procedures*:

USBR *3105 Hydrogen Ion Activity (pH) of Water and Water-Based Fluids
USBR 3900 Standard Definitions of Terms and Symbols Relating to Soil Mechanics
USBR 5890 Preparing Laboratory Bentonitic Slurry Sample
USBR 5891 Determining Coarse-Grained Portion of a Slurry by the Sand Content Test Method
USBR 5892 Determining Slurry Unit Weight by the Mud Balance Test Method
USBR 5893 Determining Slurry Filtration Characteristics by the Filter Press Test Method
USBR 5894 Determing Slurry Viscosity by the Marsh Funnel Test Method

3.2 *ASTM Standard*:

E 1 ASTM Thermometers

3.3 *API Recommended Practice.*–Standard Procedure for Testing Drilling Fluids, American Petroleum Institute, APIRP 13B, sec. 2, 1982

4. Summary of Method

4.1 A slurry specimen is poured into a suitable container. The container is placed under the rotatable cylinder. The cylinder is lowered into the fluid to a specified (marked) depth. The outer sleeve is spun by handcrank or electric motor at a constant velocity. The fluid exerts a shear stress on an inner bob which causes a measurable rotational deflection of the bob. The instrument described in subparagraph 1.3 is calibrated such that the shear stress is read directly on the dial gauge in units of lbf/100 ft^2.

5. Significance and Use

5.1 This procedure is used to assess the viscosity of slurries. The initial shear stress and shear stress at different velocities are used to determine slurry viscosity, maximum particle size that will be held in suspension, and settlement rates of solid particles.

5.2 Shear stress measurements of particular interest are those taken at velocities of 300 and 600 r/min with 10-second stand times, and at 3 r/min with stands time of 10 minutes.

5.3 The instrument described in subparagraph 1.3 is constructed such that the PV (plastic viscosity) in centipoises equals the 600-r/min shear stress reading minus the 300-r/min shear stress reading; the YP (yield point) in lbf/100 ft^2 equals the 300-r/min shear stress reading minus the PV; and the AV (apparent viscosity) in centipoises equals the 600-r/min shear stress reading divided by 2.

5.4 The 600- and 300-r/min shear stress readings; the PV, YP, and AV calculations; and the gel-strength measurements are used to (a) evaluate changes in slurry viscosity and degree of hydration of bentonitic slurries, (b) determine pump size requirements, and (c) determine slurry capability to lift drill cuttings or to suspend solids in a slurry trench excavation.

6. Terminology

6.1 Definitions are in accordance with USBR 3900. Terms not included in USBR 3900 specific to this designation are:

6.1.1 *Aggregate.*–Any material held in suspension by slurry shear strength such as silt, sand, organic material, etc.

6.1.2 *Centipoise.*–A measure of fluid viscosity in which a stress of 1/100th of a dyne per square centimeter is required to maintain a difference of velocity of 1 cm/s between 2 parallel planes lying in the direction of flow and separated by a distance of 1 centimeter.

6.1.3 *Viscometer.*–Often referred to as a "rheometer" or "rotary viscometer," an instrument for measuring the flow properties of fluids.

6.1.4 *Slurry.*–Any fluid used in drilling or slurry trench construction that displays an initial shear strength and/or gains shear strength with time. The slurry may or may not contain aggregate.

7. Apparatus

7.1 Viscometers are commercially manufactured devices having drive mechanisms powered by hand or electric motors (fig. 1). With the exception of the drive mechanism, all are essentially the same.

7.2 *Viscometer Test Set*:

7.2.1 *Mud Cup.*–Capable of holding a volume of slurry mud sufficient to allow the rotating cylinder to penetrate to the specified depth and not touch the bottom or sides of the cup.

7.2.2 *Viscometer.*–Consists of a stand, drive mechanism, velocity control lever(s), gear box, dial gauge, torsion spring, inner bob, and outer sleeve. Some viscometers also may require a retaining spindle for the inner bob.

7.3 *Thermometer.*–0 to 50 °C, 0.5 °C divisions, conforming to requirements of ASTM E 1.

7.4 Timer.–A 30-minute clock, accurate within 1.0 second.

8. Precautions

8.1 *Safety Precautions*:

8.1.1 This designation may involve hazardous materials, operations, and equipment.

8.1.2 Most viscometers are designed to operate in unpressurized fluids with a maximum temperature of 200 °F (93 °C). If fluids above 200 °F are to be tested, the operator should either use a solid metal bob or make sure that the hollow bob is completely dry inside and

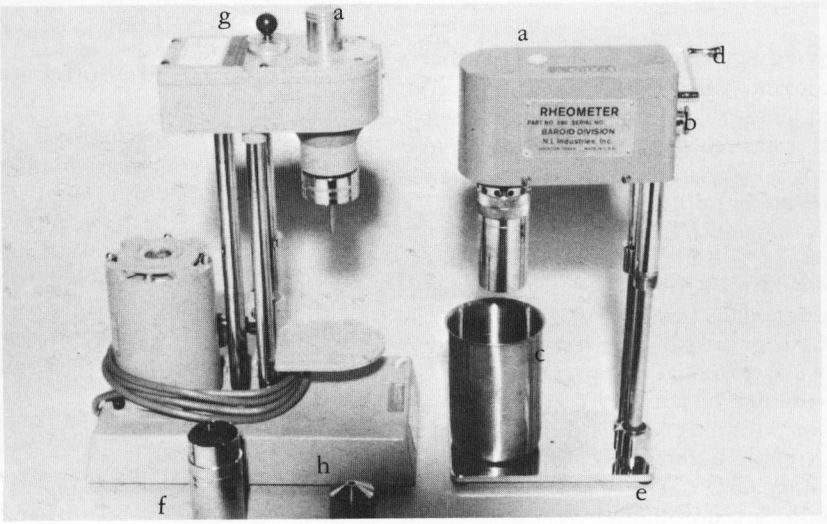

Figure 1. – Viscometers. A-C motor operated (left-side) and manually generated. (a) dial gauge, (b) low speed crank, (c) mud cup, (d) high speed crank, (e) stand, (f) outer sleeve, (g) speed control lever, and (h) inner bob.

outside. Liquid trapped inside a hollow bob may vaporize and cause the bob to explode when immersed in high temperature fluid.

8.2 *Technical Precautions*:

8.2.1 The clearance between the inner bob and outer sleeve is small. When testing aggregated slurries, it is possible to bind the bob and sleeve on large pieces of aggregate and to scratch the bob and/or sleeve and alter calibration of the apparatus.

8.2.2 Slurries tested with this apparatus should have a maximum particle size of 0.1 mm. Particles larger than 0.1 mm may jam the mechanism and produce faulty readings.

9. Calibration

9.1 Procedures for calibrating a particular viscometer are contained in the manufacturer-supplied literature. The calibration procedures are used to check for correct spring tension on the inner bob and for correct sleeve rotation velocities. Generally, a much simpler test of reliability may be made by comparing results of tests performed on distilled water, at a rotational velocity of 600 r/min and a constant temperature, to those obtained when the viscometer was new or, immediately following a calibration. The apparatus should be calibrated (a) when it is new, (b) annually, or (c) any time a difference of ±3.0 lbf/100 ft² is found when comparing to tests performed on distilled water.

9.2 Calibration may be affected by the roughness of the sleeve and inner bob or cylinder. When testing aggregated slurry muds, a visual inspection for scratches or pitting of all parts coming in contact with the slurry should be made each time the apparatus is cleaned. When scratches or pits on any piece have become deep enough to affect the results of a test performed on distilled water, the damaged parts should be replaced.

10. Conditioning

10.1 Slurry specimen temperature should not vary more than ±2 °C from the temperature of the source slurry.

11. Procedure

11.1 All data are to be recorded on the "Slurry Properties" form as shown on figure 2.

11.2 Verify that all parts of the viscometer are clean and that moving parts do not bind.

11.3 Check that the dial gauge reading is zero when the outer sleeve is not turning.

11.4 Fill the mud cup to the scribed line with the slurry to be tested and place the cup on the stand directly below the sleeve.

11.5 Immerse the rotor sleeve into the slurry exactly to the line scribed on the rotor sleeve.

11.6 Set the velocity control to 600 r/min and begin rotating the sleeve. While rotating the sleeve, wait for the dial reading to become stable. The dial reading should stabilize within 10 seconds. Read and record (as shown on fig. 2) the dial gauge reading and stop rotating the sleeve.

NOTE 1.–Velocity control levers for mechanical and electrical viscometers are different in design and location. For a particular model viscometer, check manufacturer-supplied operating instructions for lever positions for all velocity settings.

11.7 Set the velocity control to 300 r/min and begin rotating the sleeve. Wait for the dial reading to become stable and record this reading as shown on figure 2. Stop rotating the sleeve.

11.8 Stir the slurry specimen by rotating the rotor sleeve for an additional 10 seconds at 600 r/min. Stop rotating the sleeve.

11.9 With the rotor sleeve in the specimen, allow the specimen to stand undisturbed for 10 seconds. Set the velocity control to 3 r/min. Rotate the sleeve slowly and steadily. The maximum dial reading is to be recorded as the initial gel strength.

11.10 Restir the specimen by rotating the rotor sleeve at 600 r/min for 10 seconds. Stop rotating the sleeve.

11.11 With the rotor sleeve in the specimen, allow the specimen to stand undisturbed for 10 minutes. Set the velocity control to 3 r/min and rotate the sleeve slowly and steadily. Record the maximum dial reading as the 10-minute gel strength.

11.12 Measure and record the slurry temperature to the nearest 0.5 °C in accordance with subparagraph 2.3.

11.13 Discard the fluid; carefully dismantle and thoroughly clean and dry the apparatus.

11.14 Reassemble and store the apparatus in a secure place.

12. Calculations

12.1 *Plastic Viscosity* (PV):

PV, centipoises =
600-r/min reading minus 300-r/min reading (1)

NOTE 2.–The viscometers described in subparagraph 1.3 are internally calibrated so that conversion factors are not required for calculating the plastic viscosity and apparent viscosity in centipoise. For other viscometers, refer to the manufacturer's literature for the correct conversion factors.

12.2 *Yield Point* (YP):

YP, lbf/100 ft² = 300-r/min reading minus PV (2)

12.3 *Apparent Viscosity* (AV):

$$\text{AV, centipoises} = \frac{1}{2}\ (\text{600-r/min reading}) \qquad (3)$$

NOTE 3.–To convert from lbf/100 ft² to Pa, multiply by 0.4788. The number 0.4788 is derived from combining two conversion factors. First lbf/100 ft² is converted to lbf/ft² by dividing by 100, and second, lbf/ft² is converted to Pa (pascals) by multiplying by 47.88.

13. Report

13.1 The report is to consist of a completed and checked "Slurry Properties" form (fig. 2).

13.2 All calculations are to show a checkmark.

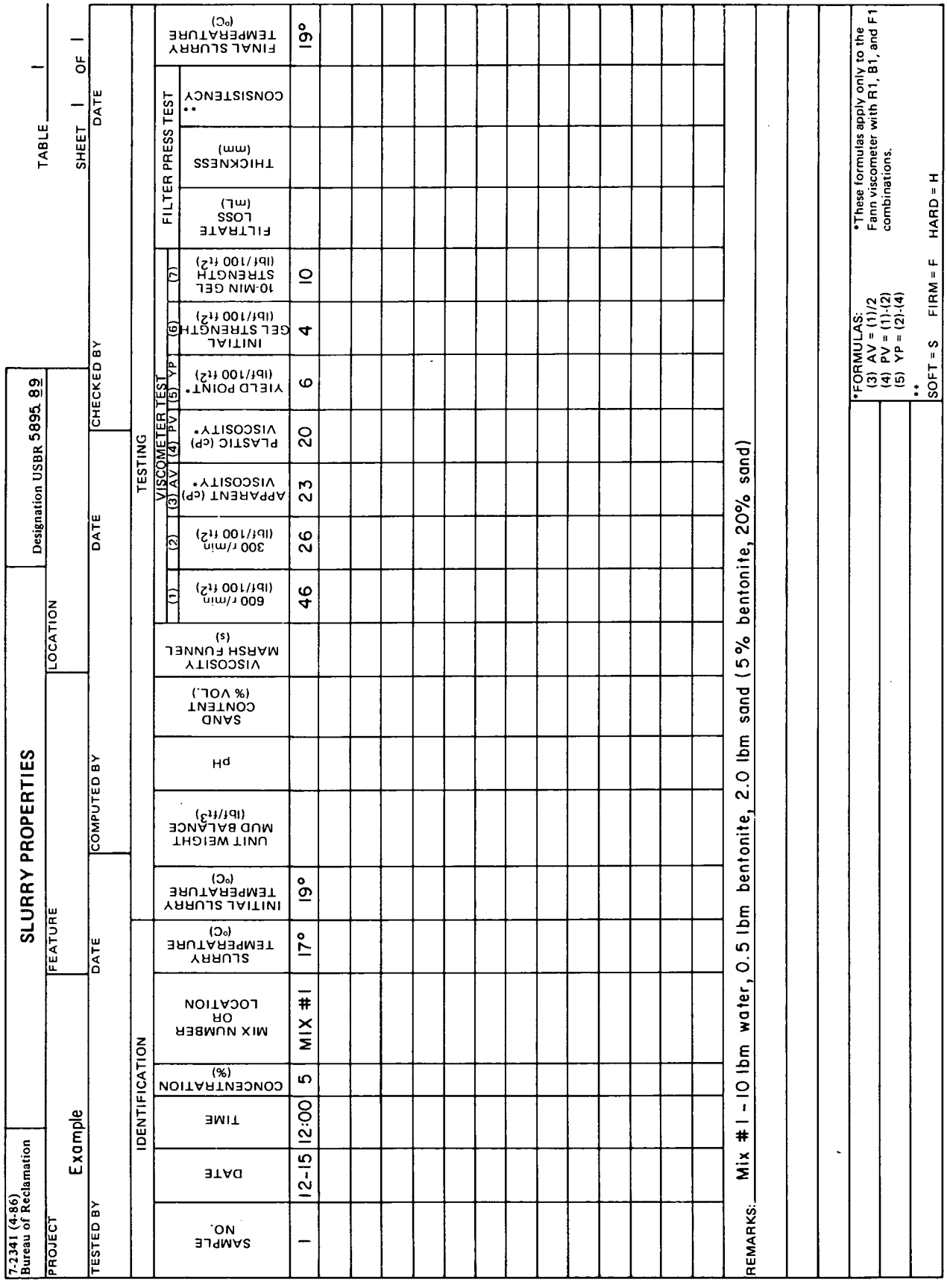

7-2341 (4-86)
Bureau of Reclamation

SLURRY PROPERTIES

Designation USBR 5895 89

TABLE 1

SHEET 1 OF 1

PROJECT	FEATURE	LOCATION
Example		

TESTED BY	DATE	COMPUTED BY	DATE	CHECKED BY	DATE

IDENTIFICATION						TESTING															
											VISCOMETER TEST							FILTER PRESS TEST			
											(1)	(2)	(3) AV	(4) PV	(5) YP	(6)	(7)				
SAMPLE NO.	DATE	TIME	CONCENTRATION (%)	MIX NUMBER OR LOCATION	SLURRY TEMPERATURE (°C)	INITIAL SLURRY TEMPERATURE (°C)	UNIT WEIGHT MUD BALANCE (lbf/ft³)	pH	SAND CONTENT (% VOL.)	VISCOSITY MARSH FUNNEL (s)	600 r/min (lbf/100 ft²)	300 r/min (lbf/100 ft²)	APPARENT (cP) VISCOSITY*	PLASTIC (cP) VISCOSITY*	YIELD POINT* (lbf/100 ft²)	INITIAL GEL STRENGTH (lbf/100 ft²)	10-MIN GEL STRENGTH (lbf/100 ft²)	FILTRATE LOSS (mL)	THICKNESS (mm)	CONSISTENCY**	FINAL SLURRY TEMPERATURE (°C)
1	12-15	12:00	5	MIX #1	17°	19°					46	26	23	20	6	4	10				19°

REMARKS: Mix #1 - 10 lbm water, 0.5 lbm bentonite, 2.0 lbm sand (5% bentonite, 20% sand)

*FORMULAS:
(3) AV = (1)/2
(4) PV = (1)-(2)
(5) YP = (2)-(4)

**
SOFT = S FIRM = F HARD = H

*These formulas apply only to the Fann viscometer with R1, B1, and F1 combinations.

GPO 850-598

Figure 2. – Slurry properties — example.

UNITED STATES DEPARTMENT OF THE INTERIOR
BUREAU OF RECLAMATION

USBR 7000-89

PROCEDURE FOR

PERFORMING DISTURBED SOIL SAMPLING IN TEST PITS, TRENCHES, ACCESSIBLE BORINGS, AND TUNNELS

INTRODUCTION

This procedure is under the jurisdiction of the Geotechnical Services Branch, code D-3760, Research and Laboratory Services Division, Denver Office, Denver, Colorado. The procedure is issued under the fixed designation USBR 7000. The number immediately following the designation indicates the year of acceptance or the year of last revision.

1. Scope

1.1 This designation outlines the procedure for obtaining representative, disturbed samples from test pits, trenches, accessible borings, and tunnels.

1.2 Disturbed, representative samples of soil are satisfactory for laboratory testing when:

1.2.1 A soil deposit is being investigated for use as borrow material for construction purposes.

1.2.2 Visual classification, physical properties tests, and compaction tests are to be performed on the sample.

1.2.3 Undisturbed samples of very soft soils or coarse, gravelly, and very dense soils are impossible to obtain, and the unit weight and moisture content of the soil in place are known so the sample can be compacted to its original unit weight and moisture content in the laboratory.

1.3 Disturbed samples may be obtained from test pits, trenches, accessible borings, and tunnels. Each method of excavation is listed in table 1 including the procedure, limitations, advantages, and disadvantages.

1.4 Depending on the nature of the soils and depth of excavation below ground-water level, dewatering may be required for stability of the walls of test pits, trenches, accessible borings, and tunnels. Dewatering may also be required to keep the excavation dry and to prevent the bottom of the excavation from heaving.

1.5 Test pits and trenches are valuable because they permit a detailed examination of the entire soil profile column to the depth they are exposed.

2. Auxiliary Tests

2.1 Visual classification of soil materials in accordance with USBR 5005 is required as part of this procedure.

3. Applicable Documents

3.1 *USBR Procedures*:

USBR 3900 Standard Definitions of Terms and Symbols Relating to Soil Mechanics

USBR 5005 Determining Unified Soil Classification (Visual Method)

USBR 5205 Preparing Soil Samples by Splitting or Quartering

USBR 5320 Determining Specific Gravity of Soils

3.2 *USBR Document*:

Construction Safety Standards

4. Summary of Method

4.1 After a test pit, trench, accessible boring, or tunnel is excavated and supported (as required), each stratum of soil exposed on the face of the excavation is sampled, visually classified, and its depth measured. Either a representative, disturbed sample of each stratum, or a composite sample of two or more strata is obtained, bagged, labeled, and shipped to the laboratory.

5. Significance and Use

5.1 During reconnaissance and feasibility stages of investigation, disturbed, representative soil samples are useful and appropriate for obtaining material from natural deposits for proposed construction of embankment dams, canal linings, fills and backfills, roads, and other construction.

5.2 When undisturbed tube samples of (a) very soft, (b) coarse, (c) gravelly, (d) very dense, or (e) cohesionless soils are impossible to obtain, representative, disturbed samples may be obtained so that laboratory tests can be performed on compacted soil provided in-place unit weight, moisture content, and stress conditions are known.

5.3 Generally, composite samples are required for investigation of stratified deposits being considered for use as construction materials. They are obtained by preserving all material excavated between appropriate depths from a narrow channel in the walls of a test pit or trench, or they may be prepared by mixing samples taken at various depths from a test pit or trench.

5.4 The process of advancing an excavation to gain access for disturbed sampling gives valuable information on the difficulties to be encountered in and probable costs of excavation for a proposed structure.

Table 1.–Accessible methods of excavation.

Method	Procedure	Limitations	Comments
Trenching	Excavate a shallow trench [usually 3 to 6 ft wide (1 to 2 m)] by hand or power equipment and extend in length as required.	Generally shallow depth. If deeper than 5 feet (1.5 m), support or slope backwalls of excavation except in stable material with no possibility of movement or cave-in.	Can provide a continuous two-dimensional soil profile. A trenching or ditching machine can often be used to advantage. Is economical and best method for shallow explorations of borrow, foundation, and aggregate deposits.
Test pits	Excavate a rectangular or square pit [normally of 4 to 10 feet (1 to 3 m)] by hand or power equipment.	Economical limit of depth in the United States is considered to be 25 feet (7.5 m), although pits more than 50 feet (15 m) in depth have been excavated. If deeper than 5 feet (1.5 m), support or slope backwalls of excavation.	Usually test pits are more expensive than trenching methods.
Accessible boring	Special purpose drilling rigs such as large diameter bucket augers may be used to drill large diameter borings extending to a depth of about 100 feet (30 m).	Large diameter borings deeper than 5 feet (1.5 m) should be cased with steel pipe into which holes have been cut to permit inspection and sampling of the sidewalls of the excavation.	If power equipment is available and area is accessible, large diameter borings can be made in a fraction of the time and cost required for sinking test pits by hand methods.
Tunnels and drifts	Excavate accessible holes 4 by 6 feet (1 by 2 m), or 5 by 7 feet (1.5 by 2 m) by hand, and 6 by 8 feet (2 by 2.5 m) minimum when power mucking and hauling equipment are used.	Expensive, and used only under special conditions. Roof and walls of a tunnel require a support system.	Underground lighting and ventilation must be provided.

6. Terminology

6.1 Definitions are in accordance with USBR 3900.

6.2 Terms not included in USBR 3900 specific to this designation are:

6.2.1 *Support System.*–Various methods to support the walls of an excavation, or walls and roof of a tunnel to prevent movement and cave-ins, including sheeting, sheet piling, bracing, shoring, trench boxes, cribbing, and other methods.

6.2.2 *Quartering.*–A method to reduce the size of a disturbed sample while preserving it as a representative sample.

7. Interferences

7.1 Exposure to air may cause oxidation and—combined with contact with water—may cause disintegration of certain partially cemented soils. It is important that samples be taken and protected as soon as possible after final trimming and preparations for sampling.

8. Apparatus

8.1 Hand excavating tools as required, including pick, shovel, trowel, etc.

8.2 Power excavating equipment (as required) such as backhoes, trenching machines, bulldozers, scrapers, draglines, large diameter bucket augers, etc.

8.3 Support systems to secure the walls of an excavation or walls and roof of a tunnel, such as sheeting, sheet piling, bracing, shoring, trench boxes, cribbing, large diameter steel casing, etc.

8.4 Tape measure, data forms, camera, film, moisture-proof containers, sample bags, labels, tags, and other necessary supplies.

8.5 Underground lighting and ventilating equipment as required.

9. Precautions

9.1 *Safety Precautions*:

9.1.1 This designation may involve hazardous material, operations, and equipment.

9.1.2 Excavation operations, earthmoving equipment, and blasting operations must comply with standards set forth in *Construction Safety Standards.*

9.1.3 Personal protective equipment consisting of a hardhat, safety glasses, gloves, and safety shoes must be worn while obtaining samples from test pits, trenches, and tunnels.

9.1.4 Prior to excavation, the location of underground installations such as gas, telephone, electric lines, etc., must be determined and plainly staked.

9.1.5 Only qualified, licensed employees are permitted to operate backhoes, dozers, power shovels, or other heavy equipment.

9.1.6 Deposit material excavated from a test pit or trench at least 2 feet and preferably 5 feet or more (0.5 or 1.5 mm) from the edge of the excavation to prevent hazardous loading at the top of the excavation.

9.1.7 Shallow test pits and trenches in firm ground can generally be excavated without support of the walls. A support system; i.e., piling, cribbing, shoring, etc., or sloping wall is required for excavations deeper than 5 feet (1.5 mm); the support system must be designed by a professional engineer experienced in that type of work.

9.1.8 Before entering a test pit or trench, sidewalls should be inspected, and loose overhanging material or other material that could fall into the excavation should be removed.

9.1.9 If the excavation is over 4 feet (1 m) in depth, ladders, stairs, or ramps should be provided.

9.1.10 Ground water should be controlled; surface water should not be permitted to accumulate in excavations. After rainstorms, excavations should be inspected by a qualified person; protection from possible slides or cave-ins should be assessed and shoring increased as necessary.

9.1.11 Guardrails, fences, or barricades and warning lights or other illumination should be provided around excavations to protect pedestrians or vehicular traffic. All temporary excavations should be backfilled as soon as possible.

9.1.12 The roof and walls of a tunnel excavated in soil require a support system designed by a professional engineer experienced in that type of work. Underground lighting and ventilation must be provided as set forth in *Construction Safety Standards.*

10. Calibration and Standardization

10.1 Not applicable, reference standards are not used for this procedure.

11. Conditioning

11.1 For fine-grained soil, it is desirable to maintain approximate in-place moisture conditions. Samples should be taken as soon as possible after final trimming and preparation for sampling, and placed in plastic-lined bags.

12. Procedure

12.1 All data are to be recorded on the "Log of Test Pit or Auger Hole" form as shown on figure 1.

12.2 Excavate a test pit, trench, accessible boring, or tunnel by hand or power equipment observing the precautions set forth in paragraph 9.

12.3 Remove all weathered and mixed soil from the exposed face of the excavation being logged and sampled.

NOTE 1.–If soil strata vary on different faces of an excavation, logging and sampling on more than one face may be required.

12.4 Determine and record the depth of each stratum of material encountered, from the ground surface to the entire depth of excavation. Photograph the exposed face of the excavation being logged and sampled.

12.5 Visually classify each stratum in accordance with USBR 5005; describe the in-place condition of the soil as shown on figure 1.

12.6 Obtain a representative, disturbed sample from the exposed face that was logged. Required sample size is given in USBR 5205, appendix X1, and typically depends on the amount of material required for laboratory testing and the maximum particle size of material sampled. Two methods of sampling are possible (a) individual samples of each soil stratum, and (b) a composite sample of two or more soil strata. If samples from certain strata are omitted, note the reasons why they were not taken under *Remarks* on the log form (fig. 1).

12.6.1 Generally, individual samples are obtained for each soil stratum over 12 inches (305 mm) in thickness. Special care is required to prevent inclusion of material from other strata.

12.6.2 A composite sample of two or more soil strata may be obtained as shown on figure 2.

12.6.2.1 Place a canvas at the bottom of the excavated wall.

12.6.2.2 Trench the trimmed wall surface with a vertical cut of uniform cross section. The width and depth of the cut should be at least four times the diameter of the largest soil particle sampled.

12.6.2.3 Collect the soil on the canvas. When the collected sample is larger than needed for testing, the sample should be mixed thoroughly and the sample size reduced by quartering on the canvas.

NOTE 2.–The sample can be mixed if two or more individuals hold opposite corners of the canvas and lift one side of the canvas at a time to roll the sample toward the opposite side. Then this procedure is followed in reverse order and repeated a sufficient number of times to ensure complete and uniform mixing of the sample. Care must be taken to ensure that material is not lost during the mixing operation.

12.6.2.4 A sample is quartered by placing it in a uniform conical pile on the canvas. The pile is flattened to uniform thickness and marked into quarters by two lines intersecting at right angles at the center of the pile. Two diagonally opposite quarters are removed; the remaining material is mixed, quartered, and reduced until the desired sample size is obtained.

12.7 Record the size of sample obtained and the maximum particle size of material sampled. Required sample sizes are given in USBR 5205, appendix X1. Percentage, by volume, of cobbles or boulders can be estimated or calculated (app. X1).

12.8 Place the collected sample in a sturdy, closely woven bag or plastic-lined bag for shipment.

12.8.1 For fine-grained soil, it is desirable to maintain in-place moisture conditions and plastic-lined bags are recommended for this purpose.

7-1336-A (1-86) Bureau of Reclamation

LOG OF TEST PIT OR AUGER HOLE

HOLE NO. 1

FEATURE Example
AREA DESIGNATION Spillway
COORDINATES N 16,500 E 6,910
APPROXIMATE DIMENSIONS 4 by 8 feet
DEPTH WATER ENCOUNTERED 1/ --- DATE

PROJECT Example
GROUND ELEVATION 682.7 feet
METHOD OF EXPLORATION Backhoe
LOGGED BY Smith, L. S.
DATE(S) LOGGED April 13, 1989

CLASSIFICATION GROUP SYMBOL (describe sample taken)	CLASSIFICATION AND DESCRIPTION OF MATERIAL SEE USBR 5000, 5005	% PLUS 3 in (BY VOLUME) 3 - 5 in	5 - 12 in	PLUS 12 in
ML one sack sample 2.0 ft	0.0 - 2.0 ft SILT: About 95% nonplastic fines with rapid dilatancy, low dry strength; about 5% fine sand; maximum size, fine sand; dry, brown; strong reaction with HCl. One 50-lbm sack sample taken from entire interval.			
SM two sack samples 6.5 ft	2.0 - 6.5 ft SILTY SAND: About 75% fine to coarse, hard, subangular sand; about 25% nonplastic fines, no dry strength, slow dilatancy; maximum size, coarse sand; moist, tan; weak reaction with HCl. Two 50-lbm sack samples obtained by mixing and quartering entire interval.			
GP-GM five sack samples 12.0 ft	6.5 - 12.0 ft POORLY GRADED GRAVEL WITH SILT, SAND, COBBLES, AND BOULDERS: About 75% fine to coarse, hard, subrounded to subangular gravel; about 15% fine sand; about 10% nonplastic fines; wet, brown; no reaction with HCl. TOTAL SAMPLE (BY VOLUME): About 10% 3- to 5-inch hard, subrounded cobbles; about 5% 5- to 12-inch hard, subrounded cobbles, trace of plus 12-inch hard, rounded boulders; remainder minus 3-inch; maximum size, 400 mm. Five 50-lbm sack samples taken from 30-inch-wide sampling trench from entire interval on south side of test pit.	10	5	tr

REMARKS:

STOPPED BY HARD MATERIAL

1/ Report to nearest 0.1 foot

GPO 849-366

Figure 1. - Log of test pit or auger hole — example.

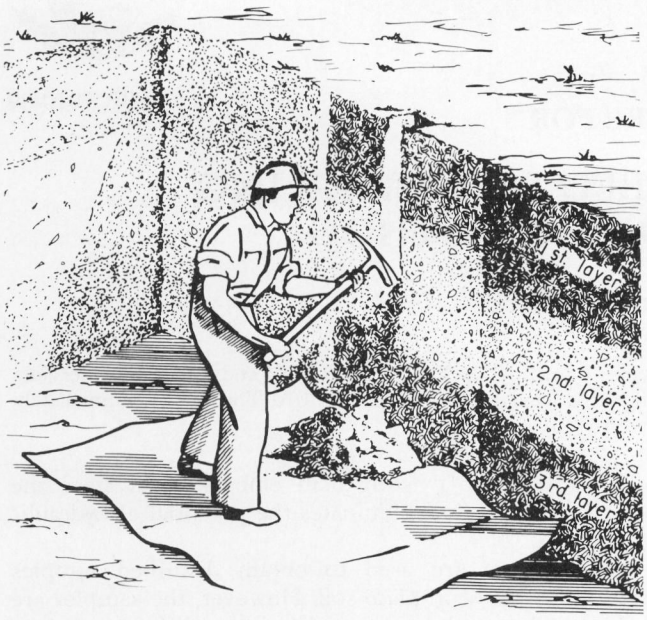

Figure 2. – Disturbed sampling of soil. Individual samples are taken from each layer of soil. Composite samples are taken from two or more layers of soil.

12.8.2 For moisture content determination, disturbed samples can be placed in moistureproof containers such as pint-sized glass or plastic jars or small metal cans with airtight covers. The sample should completely fill the container.

12.9 Identify and mark the sample.

12.9.1 Required identification information includes:

- Field sample number
- Test pit, trench, boring, or tunnel number
- Location — coordinates, station, offset, section, top elevation, etc.
- Area — name, letter, number, or other identification
- Depth interval sample represents
- Purpose — lining, filter, backfill, embankment, record, or other
- Sack (No.) of ____ (if the sample is placed in more than one sack or container)
- Project
- Feature

12.9.2 Each sample should have duplicate identification tags, one on the outside of the container and one inside. When the soil is so wet as to cause paper tags to become illegible, the tag should be enclosed in a sealed plastic bag (ziplock type) or an aluminum tag should be used inside the container. For moisture content containers, the identification can be marked directly on the exterior or on labels fastened to the outside surface; do not mark the lids because lids may be inadvertently interchanged.

12.10 Ship the samples to the Bureau's Denver Office:

Geotechnical Services Branch, D-3760
Building 56, Entrance W-13
Bureau of Reclamation
PO Box 25007
Denver CO 80225

A copy of the letter of transmittal should be included with each shipment of samples.

13. Calculations

13.1 Calculations are not required.

14. Report

14.1 The report is to consist of a completed "Log of Test Pit or Auger Hole" form (fig. 1).

APPENDIX

X1. COBBLES OR BOULDERS CALCULATIONS

X1.1 For excavations, where cobbles and boulders are present, the percentages by volume of cobbles or boulders can be calculated using the following equation:

$$\text{Percent by volume of cobbles or boulders} = \frac{100\ (\text{mass of rock sampled, lbm})}{62.4\ G_m\ (\text{volume of hole sampled, ft}^3)}$$

where:

G_m = bulk specific gravity of rock (State how G_m was measured or estimated. See designation USBR 5320.)
62.4 = density of water at 68 °F (20 °C), lbm/ft^3
100 = convert from decimal to percent

UNITED STATES DEPARTMENT OF THE INTERIOR
BUREAU OF RECLAMATION

USBR 7010-89

PROCEDURE FOR

PERFORMING DISTURBED SOIL SAMPLING USING AUGER BORING METHOD

INTRODUCTION

This procedure is under the jurisdiction of the Geotechnical Services Branch, code D-3760, Research and Laboratory Services Division, Denver Office, Denver, Colorado. The procedure is issued under the fixed designation USBR 7010. The number immediately following the designation indicates the year of acceptance or the year of last revision.

1. Scope

1.1 This designation outlines procedures for obtaining disturbed soil samples using auger boring methods.

1.2 These procedures focus on (a) basic description of an auger, and (b) procedures and techniques in the use of augers.

1.3 Augers are classified in two major categories — hand-operated augers and machine-operated augers.

1.4 Hand-operated augers are generally used above the water table and to a maximum depth of 30 feet.

1.5 Power augers (machine-operated) of the continuous flight type may be used to depths of 100 feet and sometimes more.

1.6 Augers, other than the hollow stem type in which the auger flight remains in the hole and serves as casing, are generally restricted to operations above ground-water level unless casing is used.

1.7 Alternate methods of obtaining disturbed samples are percussion or churn drilling, wash borings, jetting, and drive tube sampling.

2. Applicable Documents

2.1 *USBR Procedures*:

USBR 5005 Determining Unified Soil Classification (Visual Method)

USBR 5205 Preparing Soil Samples by Splitting or Quartering

USBR 5320 Determining Specific Gravity of Soils

2.2 *ASTM Standard*:

D 1452 Standard Practice for Soil Investigation and Sampling by Auger Borings

3. Summary of Method

3.1 Disturbed soil samples are obtained by rotating and advancing an auger into the soil, then withdrawing the auger from the hole and removing the soil from the auger.

4. Significance and Use

4.1 Auger boring typically does not require the use of drilling fluid. Normally, it is the preferred method for drilling holes in existing dam embankments since the absence of drill fluid eliminates the potential of hydraulic fracturing.

4.2 Augers are used to obtain disturbed samples representative of in-place soil. However, the samples are mixed, and exact changes in soil strata are difficult to locate.

4.3 Auger sampling is generally used in soils where the borehole will remain open without drill fluid or casing, usually above the ground-water table. Below the ground-water table, casing is generally required.

5. Apparatus

5.1 *Hand-Operated Augers* (fig. 1):

5.1.1 *Helical Augers.*–Small lightweight augers generally available in sizes from 1 through 3 inches in diameter.

5.1.2 *Open Tubular Augers.*–Ranging in sizes from 1.5 to 8 inches in diameter and having the common characteristic of appearing essentially tubular when viewed from the digging end.

5.2 *Machine-Operated Augers.*–For machine-driven auger sampling (figs. 2 and 3), any drilling equipment capable of rotating the auger assembly and withdrawing the auger is acceptable.

5.2.1 *Helical Augers.*–Generally 3 to 48 inches in diameter, consisting essentially of a center shaft fitted with a shank or socket for application of power and having spirals (continuous flights) for conveyance and storage of cut soil. Cutter bits and pilot bits are available for use in moderate and hard materials, and the bits are normally replaceable in the field. As the bore hole is advanced, rotation of the auger carries the soil cuttings up the continuous flights (spirals) to the ground surface.

5.2.1.1 *Hollow Stem Augers.*–As the name implies, these helical augers are hollow; and by removing the center rod and pilot, the center of the auger is left open. The hollow stem auger may be left in the hole as a casing to hold the boring open for soil sampling, in-place testing, or core drilling operations through the stem into soil below the bottom of the auger. Some hollow stem augers may also be fitted with liners into which a relatively undisturbed sample is obtained as the auger is advanced into the soil.

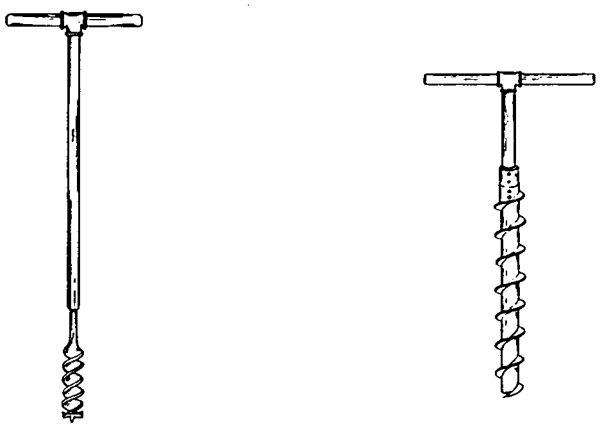

(a) Helical auger. (b) Open tubular auger.

Figure 1. – Hand augers.

5.2.1.2 *Solid Stem Augers.*–Helical augers which have solid stems. The augers must be removed from the borehole for the sampling or in-place testing operation.

5.2.2 *Disk Augers.*–Generally 10 to 42 inches in diameter, consisting essentially of a flat, low angle, helical steel disk having a shank or socket located centrally for application of power. Replaceable cutter bits, angled downward from the leading edges of a portion of the disk, dig and load soil that is held on the disk by valves or shutters hinged to the upper part of the disk in order to close behind the removed soil segments. The disk auger is specifically designed to be operated by drill rigs having limited vertical clearance between the spindle on the drill rig and the ground surface. Disk augers are restricted to *shallow depths*, generally 10 to 20 feet.

5.2.3 *Bucket or Barrel Auger.*–Generally 12 to 48 inches in diameter (and sometimes up to 96 inches in diameter), consisting essentially of a disk auger, without shank or socket, hinge mounted to the bottom of a steel tube or bucket of approximately the same diameter as the disk auger. Basically, these buckets are an open top metal cylinder with slots cut in the bottom to permit soil to enter as the bucket is rotated. A variety of cutting teeth are provided for the bucket to break up material being sampled.

5.3 *Alternative Disturbed Hand-Operated Sampling Equipment*:

5.3.1 *Posthole Samplers* (fig. 4).–Generally 2 through 8 inches in diameter and having a common means of blocking the escaping soil from the device.

5.3.1.1 *Clamshell Type.*–Consisting of two halves (blades), hinged to allow opening and closing for alternately digging and retrieving. The clamshell is operated by driving the blades into the ground in an open position, squeezing the blades together by opening the handles to hold the soil, then retracting the blades from the hole and releasing the soil by closing the handles and thereby opening the blades. Not usable deeper than about 3.5 feet.

5.3.1.2 *Iwan Type.*–Consisting of two tubular steel segments, connected at the top to a common member to form a nearly complete tube, but with diametrically opposed openings. It is connected at the bottom by two radial blades pitched to serve as cutters which also block the escape of contained soil.

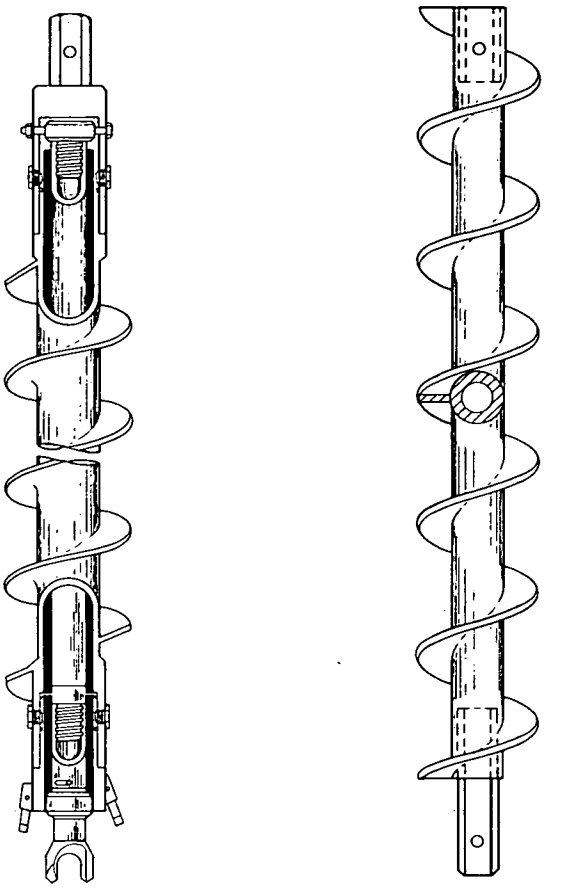

(a) Hollow stem auger. (b) Solid stem auger.

Figure 2. – Helical machine-operated augers.

6. Precautions

6.1 *Safety Precautions*:

6.1.1 This designation may involve hazardous materials, operations, and equipment.

6.1.2 When auger sampling involves the use of a drill rig, safety requirements outlined in references [1 and 2][1] must be observed.

6.1.3 A machine driven rotating auger poses a constant danger and personnel should stay clear when augers are in motion.

6.1.4 Material should never be removed from a machine driven rotating auger with shovels, hands, feet, or any object while augers are turning.

6.1.5 Hardhats and steel-toed safety shoes should be worn at all times when working near an auger boring

[1] Number in brackets refers to the reference.

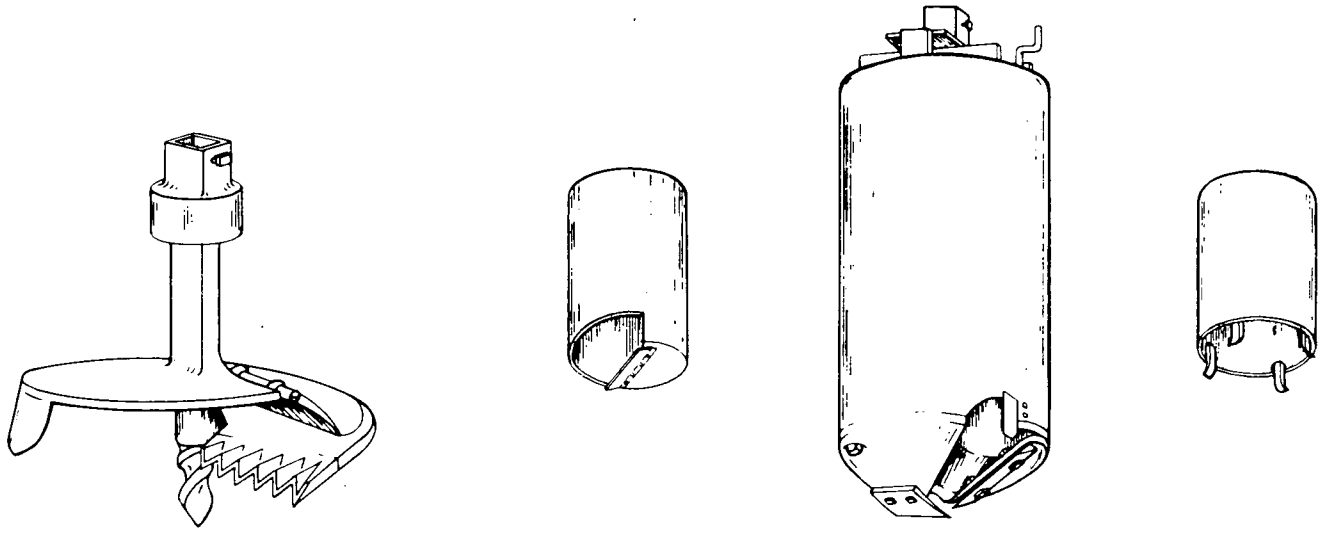

(a) Disc auger.

(b) Bucket or barrel auger.

Figure 3. – Types of power augers.

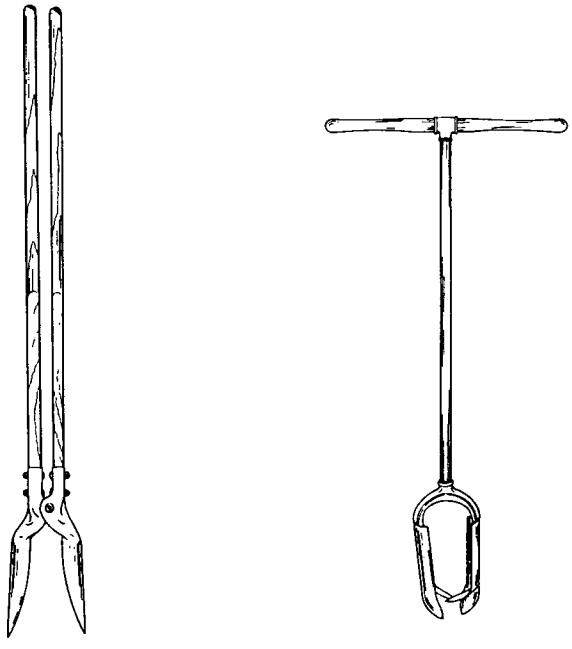

(a) Clamshell hand auger.

(b) Iwan hand auger.

Figure 4. – Posthole samplers.

operation. Other appropriate personal safety equipment should be used as needed.

6.2 *Technical Precautions*:

6.2.1 It is difficult to avoid contamination or mixing of soil samples obtained by small augers. If more than one type of soil is picked up in the sample, prepare a separate container for each type of soil.

6.2.2 Rock fragments larger than about one-tenth the diameter of the hole may be difficult to remove by normal augering methods.

7. Calibration and Standardization

7.1 Not applicable, reference standards are not used for this procedure.

8. Conditioning

8.1 Not applicable, special conditioning requirements are not needed for this procedure.

9. Procedure

9.1 All data are to be recorded on the "Log of Test Pit or Auger Hole" form as shown on figure 5.

9.2 *Auger Operation*:

9.2.1 Hand augers are advanced in the hole by turning the crossarm at the top of the auger handle while at the same time the operator presses the auger into the ground. When the auger becomes filled with soil, it is withdrawn from the hole and the soil removed. The auger is reinserted into the hole, and the process is repeated until the desired depth is reached.

9.2.2 Machine-operated auger borings are made by rotating and advancing the auger into the soil. The auger is withdrawn from the hole and the soil removed. The empty auger is returned to the hole and the procedure repeated. The sequence is continued until the required depth is reached.

9.3 Augers can be used for boring a hole and for bringing up disturbed samples of the soil encountered. They operate best in somewhat loose, moderately cohesive, moist

7-1336-A (1-86) Bureau of Reclamation

LOG OF TEST PIT OR AUGER HOLE

HOLE NO. AH-222

FEATURE Example
AREA DESIGNATION Borrow Area 2B
COORDINATES N 16,500 E 6,910
APPROXIMATE DIMENSIONS 36-inch diameter
DEPTH WATER ENCOUNTERED 1/ 9.3 ft DATE 6/6/89

PROJECT Example
GROUND ELEVATION 682.7 feet
METHOD OF EXPLORATION Auger Hole
LOGGED BY Jones, R. S.
DATE(S) LOGGED June 5-7, 1989

CLASSIFICATION GROUP SYMBOL (describe sample taken)	CLASSIFICATION AND DESCRIPTION OF MATERIAL SEE USBR 5000, 5005	% PLUS 3 in (BY VOLUME) 3 - 5 in	5 - 12 in	PLUS 12 in
ML one sack sample 2.0 ft	0.0 - 2.0 ft SILT: About 95% nonplastic fines with rapid dilatancy, low dry strength; about 5% fine sand; maximum size, fine sand; dry, brown; strong reaction with HCl. One 50-lbm sack sample obtained by mixing and quartering entire interval.			
SM two sack samples 8.5 ft	2.0 - 8.5 ft SILTY SAND: About 75% fine to coarse, hard, subangular sand; about 25% nonplastic fines, no dry strength, slow dilatancy; maximum size, coarse sand; moist, tan; weak reaction with HCl. Two 50-lbm sack samples obtained by mixing and quartering entire interval.			
GP-GM five sack samples 17.0 ft	8.5 - 17.0 ft POORLY GRADED GRAVEL WITH SILT, SAND, COBBLES, AND BOULDERS: About 75% medium to coarse, hard, subrounded to subangular gravel; about 15% fine to medium, hard, subrounded to subangular sand; about 10% nonplastic fines; wet, brown; no reaction with HCl. TOTAL SAMPLE (BY VOLUME): About 10% 3- to 5-inch hard, subrounded cobbles; about 5% 5- to 12-inch hard, subrounded boulders; remainder minus 3-inch; maximum size, 400 mm. Five 50-lbm sack samples obtained by mixing and quartering entire interval.	10	5	tr

REMARKS:

STOPPED BY HARD MATERIAL

GPO 849-366

1/ Report to nearest 0.1 foot

Figure 5. - Log of test pit or auger hole — example.

soils. The structure of the soil is completely destroyed, and the moisture content of individual soil layers encountered may be changed by the mixing action of the auger.

9.4 Usually, holes are bored with augers without addition of water; but in hard, dry soils, or in cohesionless soils, the introduction of a small amount of water will aid in drilling and sample extraction. This should be noted on the log form.

9.5 Casing is required in unstable soil in which the borehole fails to stay open and especially where the boring is extended below the ground-water level. The inside diameter of the casing must be slightly larger than the diameter of the auger. The casing is driven to a depth not greater than the top of the next sample interval and is cleaned out by means of the auger. After the hole is cleaned, the auger is advanced until it is below the bottom of the casing and the sample can be retrieved.

9.6 Table 1 provides information on nonaccessible methods of exploration for sampling from auger holes.

9.6.1 Small auger holes cannot be sampled and logged as accurately as an open trench or test pit because the entire profile cannot be inspected and representative strata cannot be selected for sampling.

9.6.2 When obtaining a sample with a hand auger, the soil removed from the hole should be deposited on canvas or other type drop cloth in individual piles in an orderly sequence by depth (see fig. 6). New piles should be started when significantly different materials are encountered. In preparing an individual sample from a hand-auger hole, consecutive piles of similar material may be grouped to represent each stratum by combining all materials from each pile within the stratum or depth being represented to form the desired size of representative sample.

9.6.2.1 For a composite sample, all materials from each pile representing the strata to be composited are combined. The combined samples are then reduced by mixing and quartering.

9.6.2.2 Mixing of a sample can be achieved successfully by two or more parties holding opposite corners of a canvas and lifting on one side of the canvas at a time to roll the sample toward the opposite side. This procedure is followed then in reverse order and repeated a sufficient number of times to ensure complete and uniform mixing of the sample and a near uniform gradation throughout.

9.6.2.3 In quartering a sample, the material is placed in a uniform conical pile. The pile is then flattened to uniform thickness and marked into quarters by two lines intersecting at right angles at the center of the pile. Two diagonally opposite quarters are removed and the remaining material is mixed, quartered, and reduced until the desired sample mass is obtained.

9.6.3 When a large diameter (8 inches or larger) power flight auger is used in fine-grained soils, the flight auger should be lifted at regular 9- to 12-inch depth intervals (may vary with length of helical flights), the rotation stopped, and one or more shovels full of soil from each

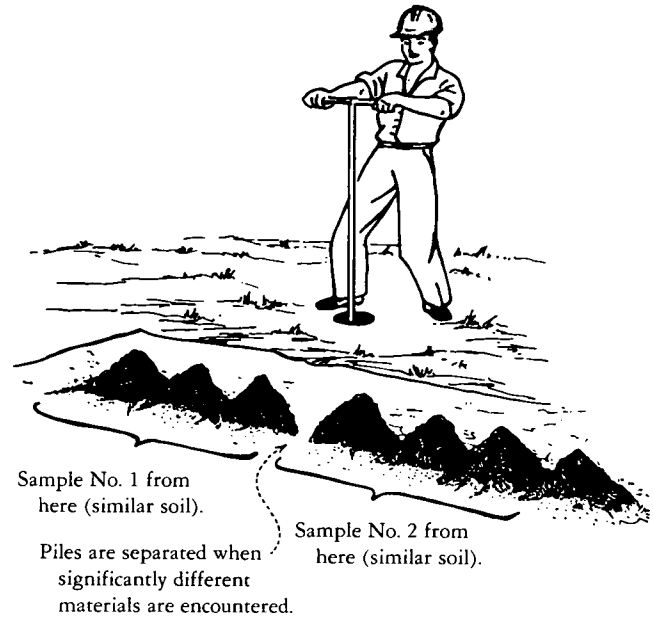

Figure 6. – Hand auger sampling.

depth piled on a canvas in a depth sequence. These piles are sampled in the same manner as those from a hand auger. In soils containing large quantities of gravel, it may be necessary to pile all of the soil augered from each stratum separately and obtain a representative sample by quartering.

9.6.4 When cobbles or boulders are encountered in explorations for sources of embankment materials, it is important to determine their percentage by volume. Paragraph 10 describes a method to obtain the percentage of cobbles or boulders by volume.

9.6.5 Visually classify soils in accordance with USBR 5005. Emphasis should be placed on the natural state of soils being investigated. An illustration of a completed log is included on figure 5.

9.7 *Sample Sizes*:

9.7.1 The quantity of soil submitted for laboratory testing depends on the tests to be performed and on the maximum particle size of the material sampled. When the amount of soil needed is not otherwise specified, the size of disturbed soil sample should conform to those given in USBR 5205.

9.7.2 Sack samples should include minus 3-inch material only. The presence of plus 3-inch material should be noted on the log of auger hole.

9.7.3 Sack samples should be limited to 50 pounds of material per sack for ease of handling.

9.8 *Preparation and Shipping*:

9.8.1 *Sample Containers*:

9.8.1.1 Large samples of cohesive soils, sands, and gravels susceptible to breakdown should be placed in plastic-lined moistureproof bags, limiting the sample mass to 50 pounds per bag. Nonfriable sands and gravels may be placed in closely woven cloth bags. When samples are to be transported by public carrier, the samples should be double sacked to decrease the probability of bag breakage. For

fine-grained soil, it is generally desirable to maintain moisture conditions as nearly in-place as possible; plastic-lined bags are recommended for this purpose.

9.8.1.2 Small disturbed samples for moisture content determination or inspection should be placed in moistureproof containers such as glass fruit jars, plastic jars, or metal cans with airtight covers. The container should be completely filled with the soil sample.

9.8.1.3 Disturbed record samples, taken during construction, should be ovendried and placed in 6- by 12-inch cylindrical cans with lids.

9.8.2 *Sample identification*:

9.8.2.1 All samples must be plainly marked with the following pertinent information:

- Field sample number
- Test pit or hole number
- Location: coordinates, station, offset, section, or other location identifcation
- Area: name, letter or number, or other identification
- Depth interval sample represents
- Purpose: lining, filter, backfill, embankment, record, etc.
- Sacks __No.__ of ____ (if sample is placed in more than one sack or container)
- Project
- Feature

9.8.2.2 Each sample should have duplicate identification tags, one on the outside of the container and one inside. If the soil is so wet as to cause paper or cloth tags to become illegible, the tags should be placed either in a protective plastic bag or an aluminum tag should be used inside the container.

9.8.2.3 Cans may be marked directly on the exterior or on labels securely fastened to the outside surface. Markings should be on the cans and not on the lids, as lids may be interchanged.

9.8.3 *Sample Shipping*:

9.8.3.1 Samples in small containers to be shipped by common carrier should be packed in strong boxes — preferably wood.

9.8.3.2 Glass jars should be protected with suitable packing materials to prevent breakage.

9.8.3.3 Bag samples may be shipped without further packing.

9.8.3.4 A copy of the letter of transmittal should be included with each shipment of samples. It must include:

- Bill of lading number and method and date of shipment
- Listing and identification of the samples giving type of sample, field sample number, hole number, elevation, or depth
- Purpose for which the samples were obtained
- Log of exploration

9.8.3.5 Regardless of the method of shipment, the samples should be sent to the Denver Federal Center addressed as follows:

Geotechnical Services Branch, D-3760
Building 56, Entrance W-13
Bureau of Reclamation
PO Box 25007
Denver CO 80225

10. Calculations

10.1 Auger boreholes producing cobbles or boulders require volume percentage calculations.

10.2 For excavations where cobbles or boulders are present, the percentages by volume can be calculated using the following equation:

$$\text{Percent by volume of cobbles or boulders} = \frac{100\ (\text{mass of rock sampled, lbm})}{62.4\ G_m\ (\text{volume of hole sampled, ft}^3)}$$

where:

G_m = bulk specific gravity of rock [State how G_m obtained (measured or estimated). See designation USBR 5320.]
62.4 = density of water at 68 °F (20 °C), lbm/ft³
100 = convert from decimal to percent

11. Report

11.1 The report is to consist of a completed "Log of Test Pit or Auger Hole" form (fig. 5). A log is a written record of the data concerning materials and conditions encountered in individual test holes. Each log should be factual, accurate, clear, and complete.

11.2 The field log must contain the following information:

- Date of start and completion of boring.
- Identifying number of boring.
- Reference data including direction and distance of boring relative to reference line of project or other suitable reference points.
- Type and size of auger used in boring.
- Depth of changes in strata.
- Description of soil in each major stratum.
- Ground-water elevation.
- Any adverse hole conditions; i.e., whether the hole remains open or the sides cave, hand drilling requiring addition of water, etc., when such events can be observed.

12. References

[1] *Driller's Safety Manual*, Bureau of Reclamation, Denver, Colorado, reprint 1982.

[2] *Construction Safety Standards*, Bureau of Reclamation, Denver, Colorado, 1987.

Table 1. - Nonaccessible methods of exploration.

Method	Procedure	Type of soil and inplace condition	Limitations	Use
Auger boring (hand)	Rotate and force auger bit into soil, withdraw and empty when full. Auger bits, 2 to 8 inches, helical or post hole.	Fine-grained cohesive, fairly hard to soft; or fine-grained, noncohesive, weakly cemented, dry or moist; with particles ¼ to 1½ inches, depending upon size of auger.	About 20 feet, 80 feet with tripod; unsatisfactory in unstable cohesionless soils below ground water; slow in hard soils.	(1) Advance hole. (2) Data for logging. (3) Representative disturbed samples for classification, index tests, and standard property tests. (4) Access for field penetration and permeability tests. (5) Access for undisturbed sampling.
Auger boring (power)	Same as above, using powered drill rigs. Auger bits, 4 to 24 inches helical, disc, or bucket. Over 28 inches considerd to be accessible.	Fine-grained as above, and coarse-grained soils with particles as large as 3 inches depending upon auger.	Economical depth about 40 feet, over 100 feet with special equipment; unsatisfactory in unstable cohesionless soils below groundwater; slow in hard, dense soil.	Same as above.
Drive-tube boring	Force open pipe or tube, with sharpened edges, without rotation, into soil; withdraw and remove soil. Thin- or thick-wall tubing or pipe, 2 to 8 inches diameter.	Fine-grained cohesive and slightly cohesive soils such as loess, firm to soft clays, and silts.	About 80 feet depending upon equipment. Not satisfactory in coarser fine-grained soils, clean sands or cohesionless soils below water table.	Same as above.
Percussion (churn) drilling	Chopping and cutting action by impact or heavy chisel edged bit. Water added and cuttings form slurry which is removed intermittently by pump or bailer. For holes larger than 4 inches.	Coarse-grained soil containing cobbles and boulders, and hard, dense, fine-grained soils and rock.	Unsatisfactory in unstable soil or fractured rock. No information for logging or samples for classification.	Used with other methods to advance hole through hard, cemented strata, coarse gravel, boulders, or other obstructions.
Wash boring	Chopping and cutting by impact and twisting action of lightweight bit, and jetting action of circulating water to remove cuttings. For holes from 2 to over 8 inches diameter.	Fine- or coarse-grained soils, with small amounts of gravel and few cobbles; fairly hard to soft; weakly cemented to loose; above or below water table.	No information for logging or samples for classification; slow in hard or cemented layers.	(1) Used with other methods to advance hole, particularly through unstable soils requiring casing. (2) Penetrate fine-grained soils to establish depth to bedrock. (3) Drill holes for groundwater observation. (4) Provide access for sampling and penetration testing of impervious soils above ground water or pervious or impervious soils below groundwater.

Table 1. – Nonaccessible methods of exploration — Continued.

Method	Procedure	Type of soil and inplace condition	Limitations	Use
Jetting	High-velocity water jet directed downward from pipe raised and lowered in short strokes; erodes soil, which is carried upward by water. For holes 2 to over 10 inches diameter.	Fine- or coarse-grained soils; weakly cemented noncohesive, or cohesive; above or below water table.	No information for logging or samples for classification; slow in hard cohesive soils.	Same as (1), (2), and (3) for wash boring (above).
Rotary drilling with drilling fluid	Power rotation of bit; cuttings removed by circulation of drilling mud or water; holes 1½ to over 10 inches diameter.	Fine- or coarse-grained, compact or cemented soils and rock.	No information for logging or samples for classification; difficult in loose, coarse-grained soil with cobbles and boulders.	(1) Advance hole. (2) Access for field penetration test (not suitable for well permeameter test or ground-water observation if drilling mud used). (3) Access for disturbed or undisturbed sampling.
Rotary drilling with air	Power rotation of bit; cuttings removed by circulation of air. Holes 2 to over 10 inches diameter.	Fine or coarse-grained, compact or cemented soils and rock.	Information for logging and samples for classification; unsatisfactory in loose, coarse-grained soil with cobbles and boulders.	(1) Advance hole. (2) Access for field penetration test. (3) Well permeameter test. (4) Ground-water observation. (5) Access for disturbed and undisturbed sampling. (6) Advance hole to install casing for nuclear moisture-density probes.
Continuous sampling	Drive-tube or rotary drilling (core boring) which provides samples as a result of advancing the hole.		Depends upon the method selected.	

UNITED STATES DEPARTMENT OF THE INTERIOR
BUREAU OF RECLAMATION

USBR 7015-89

PROCEDURE FOR

PERFORMING PENETRATION RESISTANCE TESTING AND SAMPLING OF SOIL

INTRODUCTION

This procedure is under the jurisdiction of the Geotechnical Services Branch, code D-3760, Research and Laboratory Services Division, Denver Office, Denver, Colorado. The procedure is issued under the fixed designation USBR 7015. The number immediately following the designation indicates the year of acceptance or the year of last revision.

1. Scope

1.1 This designation outlines the procedure to obtain a record of the resistance of in-place soil to the penetration of a standard sampler driven by a standard energy and to obtain representative disturbed samples of the soil for identification purposes.

1.2 Test results and identification information are used to estimate subsurface conditions for foundation design.

1.3 Penetration resistance testing is typically performed at 5-foot intervals or when a significant change of materials is observed during drilling, unless otherwise specified.

1.4 This designation is limited to use in nonlithified soils and soils whose maximum particle size is approximately less than one-half of the sampler diameter.

2. Auxiliary Tests

2.1 In some instances penetration resistance testing can be combined in a single borehole with undisturbed soil sampling, field vane shear testing, and borehole permeability testing performed in accordance with USBR 7105, 7115, and 7310, respectively.

2.2 When site specific correlations are to be developed, penetration resistance testing may be accompanied by cone penetration testing, undisturbed soil sampling, and vane shear testing performed in accordance with USBR 7020, 7105, and 7115, respectively.

2.3 The soil sample obtained is visually classified in accordance with USBR 5005 and a moisture content determined in accordance with USBR 5300. In some cases, the sample may be laboratory classified in accordance with USBR 5000.

3. Applicable Documents

3.1 *USBR Procedures*:

USBR 3900 Standard Definitions of Terms and Symbols Relating to Soil Mechanics
USBR 5000 Determining Unified Soil Classification (Laboratory Method)
USBR 5005 Determining Unified Soil Classification (Visual Method)
USBR 5300 Determining Moisture Content of Soil and Rock by the Oven Method
USBR 7020 Performing Cone Penetration Testing of Soils — Mechanical Method
USBR 7105 Performing Undisturbed Soil Sampling by Mechanical Drilling Methods
USBR 7115 Performing Field Vane Shear Testing
USBR 7310 Constant Head Hydraulic Conductivity Tests in Single Drill Holes

3.2 *USBR Document*:

Driller's Safety Manual

4. Summary of Method

4.1 After an initial seating of 0.5 foot, a standard penetration resistance sampler is driven 1.0 foot into soil below the bottom of a drill hole using a 140-lbm hammer, dropped 30 inches. Penetration resistance is expressed as the number of hammer blows required to drive the sampler the 1.0-foot distance.

5. Significance and Use

5.1 This test is used extensively for a great variety of geotechnical exploration programs. Many widely published correlations, as well as local correlations, are available which relate penetration resistance to the engineering behavior of earthwork and foundations.

5.2 This method provides a soil sample for identification and for laboratory testing. The classification information is used to develop site stratigraphy and to identify zones where further, more detailed investigations may be required.

6. Terminology

6.1 Definitions are in accordance with USBR 3900. A term of particular significance is:

6.1.1 *Standard Penetration Resistance, N.*–The number of blows of a 140-lbm hammer falling 30 inches required to produce 1 foot of penetration of a standard 2-inch outside diameter, 1-3/8-inch inside diameter sampler into soil, after an initial 0.5-foot seating.

6.2 Terms not included in USBR 3900 specific to this designation are:

6.2.1 *Anvil.*–That portion of the drive assembly which the hammer strikes and through which the hammer energy passes into the drill rods.

6.2.2 *Automatic Hammer.*–A hammer drop system which uses mechanical means to lift and drop the hammer.

6.2.3 *Cathead.*–A spinning sheave or rotating drum around which the operator wraps the rope used to lift and drop the hammer by successively tightening and loosening the rope turns around the drum.

6.2.4 *Cleanout Depth.*–Depth which the bottom of the cleanout tool (end of drill bit or cutter teeth) reaches prior to termination of cleanout procedures.

6.2.5 *Cleanout Interval.*–Interval between successive penetration resistance tests from which material must be removed using conventional drilling methods. The minimum cleanout interval is 0.5 foot.

6.2.6 *Cylinder Hammer.*–Drive weight assembly consisting of a guide pipe, jar coupling, and an open cylindrical hammer; also referred to as donut or casing hammer.

6.2.7 *Downhole Hammer.*–A hammer which is lowered down the drill hole and attached a short distance above the sampler.

6.2.8 *Donut Hammer.*–See cylinder hammer.

6.2.9 *Drive Interval.*–Interval from 0.0 to 1.5 feet below the cleanout depth which consists of the seating and the test interval.

6.2.10 *Drive Length.*–Total length of the drive interval penetrated during testing.

6.2.11 *Drive Weight Assembly.*–An assembly which consists of the hammer, anvil, hammer fall guide system, drill rod attachment system, and hoisting attachments.

6.2.12 *Hammer.*–That portion of the drive weight assembly consisting of the 140-pound mass impact which is successively lifted and dropped to provide the energy that accomplishes the penetration and sampling.

6.2.13 *N Value.*–The sum of the hammer blows required to drive the sampler over the test interval of 0.5 to 1.5 feet below the cleanout depth.

6.2.14 *Number of Rope Turns.*–The number of times a rope is wrapped completely around the cathead. Penetration resistance testing is performed using two nominal rope turns on the cathead. Depending on operator position, direction of cathead rotation, and the angle at which the rope leaves the cathead, actual number of turns typically varies from 1-3/4 to 2-1/4 turns (fig. 1).

6.2.15 *Rope-Cathead Method.*–Method of raising and dropping the hammer, which uses a rope strung through a center crown sheave or pulley on the drill mast and turns on a cathead to lift the hammer.

6.2.16 *Safety Hammer.*–Drive weight assembly consisting of a center guide rod, internal anvil, and hammer which encloses the hammer-anvil contact (fig. 2).

6.2.17 *Seating Interval.*–Interval from 0.0 to 0.5 foot below the cleanout depth.

6.2.18 *SPT.*–Abbreviation for standard penetration test or penetration resistance testing.

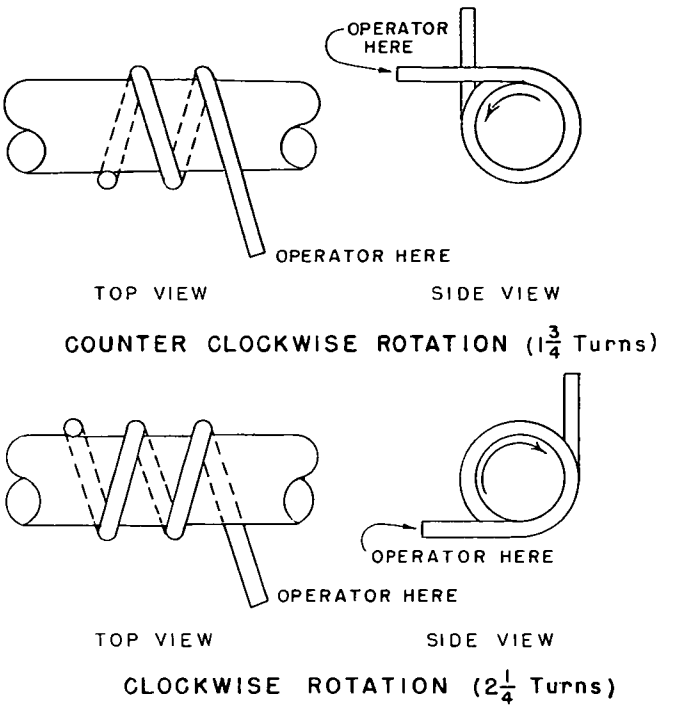

Figure 1. – Number of rope turns on cathead.

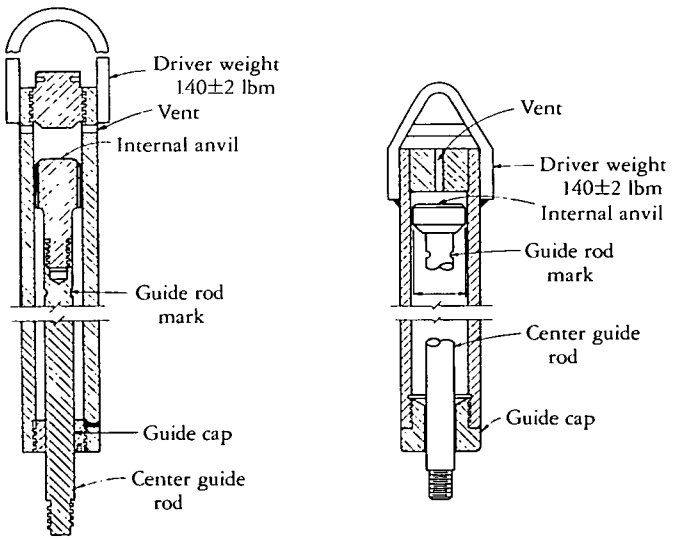

Figure 2. – Internal anvil safety hammers — typical designs.

6.2.19 *Test Interval.*–Interval from 0.5 to 1.5 feet below the cleanout depth.

6.2.20 *Trip Hammers.*–Hammers which are hoisted by rope-cathead method and mechanically released for drop without rope attached.

7. Apparatus

7.1 *Drilling Equipment.*–Any drilling equipment is acceptable that (a) provides a reasonably clean hole prior

to insertion of the sampler, (b) ensures that the penetration test is performed in undisturbed soil, and (c) permits driving the sampler to obtain the sample and penetration record in accordance with the procedure described in subparagraph 14.6. The drilling equipment must provide power-operated cathead and a crown sheave-pulley centered over the borehole to perform penetration resistance testing using the rope-cathead method.

7.1.1 Drag, chopping, and fishtail bits may be used in conjunction with open hole rotary drilling or casing advancement drilling methods. To avoid soil disturbance, only side discharge bits are permitted.

7.1.2 Roller cone bits may be used in conjunction with open hole rotary drilling or casing advancement drilling methods if fluid discharge is deflected.

7.1.3 Hollow stem continuous flight augers, with or without a center plug assembly, may be used to advance the boring.

7.1.4 Solid continuous flight, bucket, and hand augers may be used if the soil surrounding the boring does not cave onto the sampler or sampling rods during sampling.

7.2 *Drill Rod.*–Flush joint steel NW drill rods having a mass of 5 to 6 lbm/ft are to be used for all penetration resistance testing.

NOTE 1.–Flush joint BW or AW drill rods may be used in special cases. However, approval for their use must be obtained from the exploration team responsible for the investigation.

7.3 *Sampler.*–The sampler is to conform to the dimensions and materials shown on figure 3. Split barrel samplers or solid barrel-split liner samplers may be used. The solid barrel sampler is recommended for use in hard driving conditions. The sampler must be made from steel of a type and hardness suitable to resist wear. The driving shoe must be made of hardened steel. Samplers meeting these requirements may not always be available from all manufacturers of drilling equipment. Use of samplers differing from these requirements may be approved in special cases by the exploration team responsible for the investigation.

7.3.1 Basket traps or other devices, for retaining core, restrict the inside diameter of the sampler and may increase the penetration resistance. These devices are not recommended for use if reliable penetration resistance data are required. If soil retrieval and identification are required, they may be used and their effect on penetration resistance evaluated through site specific comparisons.

7.4 *Drive Weight Assembly.*–An internal anvil safety-type hammer is to be used (fig. 2). The assembly consists of a 140-lbm (±2 lbm) hammer, an internal anvil, and a guide system which permits a low friction free-fall of 30 inches. Total mass of the assembly must be less than 250 lbm. The assembly must allow for an upward stroke in excess of 30 inches to prevent backtapping of the sampler. A 30-inch drop-height mark (guide rod mark) should be maintained on the guide rod for accurate drop. The drive weight assembly must be made from steel of a type and hardness suitable to resist wear and deformation. The hammer-anvil contact must be steel on steel.

7.4.1 Downhole hammer systems are not recommended for use in penetration resistance testing.

NOTE 2.–Cylinder weight (donut) type hammers are not recommended for use in penetration resistance testing due to poor efficiency and to safety aspects. These hammers may be approved for use in special cases by the exploration team responsible for the investigation.

NOTE 3.–Trip and automatic hammer systems are preferred for use to eliminate operator influence and to provide increased safety. Prior to use of these systems, they must be calibrated and tested for reliable operation. Some hammer systems have already been tested and can be readily approved or disapproved. Calibration services can be obtained from the Geotechnical Services Branch, D-3760, Research and Laboratory Services Division, Denver Office, Denver, Colorado.

7.5 *Rope.*–Hoist rope should consist of a 3/4- to 1-inch-diameter manila rope, sized to fit the crown sheaves. The rope should be stiff, dry, and clean. Replace rope when it becomes excessively frayed, oily, limp, or burned.

7.6 *Cathead.*–The cathead should have a diameter ranging from 6 to 10 inches. The cathead should rotate in excess of 100 revolutions per minute and must be clean and free of paint, rust, oil, grease, or other contaminants.

7.7 *Miscellaneous.*–Airtight sample containers, labels, data and log forms, and other necessary tools and supplies.

8. Precautions

8.1 *Safety Precautions.*– Performance of the test usually involves use of a drill rig; therefore, safety requirements as outlined in the *Driller's Safety Manual*, or in other applicable safety standards, must be observed.

8.2 *Technical Precautions*:

8.2.1 The rope-cathead method is both an operator and a mechanically dependent procedure. The measured penetration resistance of soil is dependent on the energy delivered to the sampler. Since both operator performance and equipment condition can affect the test, any deviation from standards should be noted.

8.2.2 Special precautions shall be taken to ensure that the energy of the falling mass is not significantly reduced by friction between the drive weight and guide system. Perform maintenance to avoid friction buildup; periodically check the hammer mass and assembly mass.

8.2.3 The sampler must be clean at the beginning of each test and should be smooth and free of scars, indentations, and distortions. The driving shoe should be repaired or replaced when it becomes worn, dented or distorted.

8.2.4 Soil deposits containing gravels, cobbles, or boulders typically result in penetration refusal and damage to the equipment.

8.2.5 Plugging of the vent ports and ball check system of the sampler results in unreliable penetration resistance values.

8.2.6 Drilling disturbance of the 1.5-foot drive interval results in unreliable penetration resistance values.

8.2.7 Drilling fluids may be required for testing (see subpar. 13.2.1).

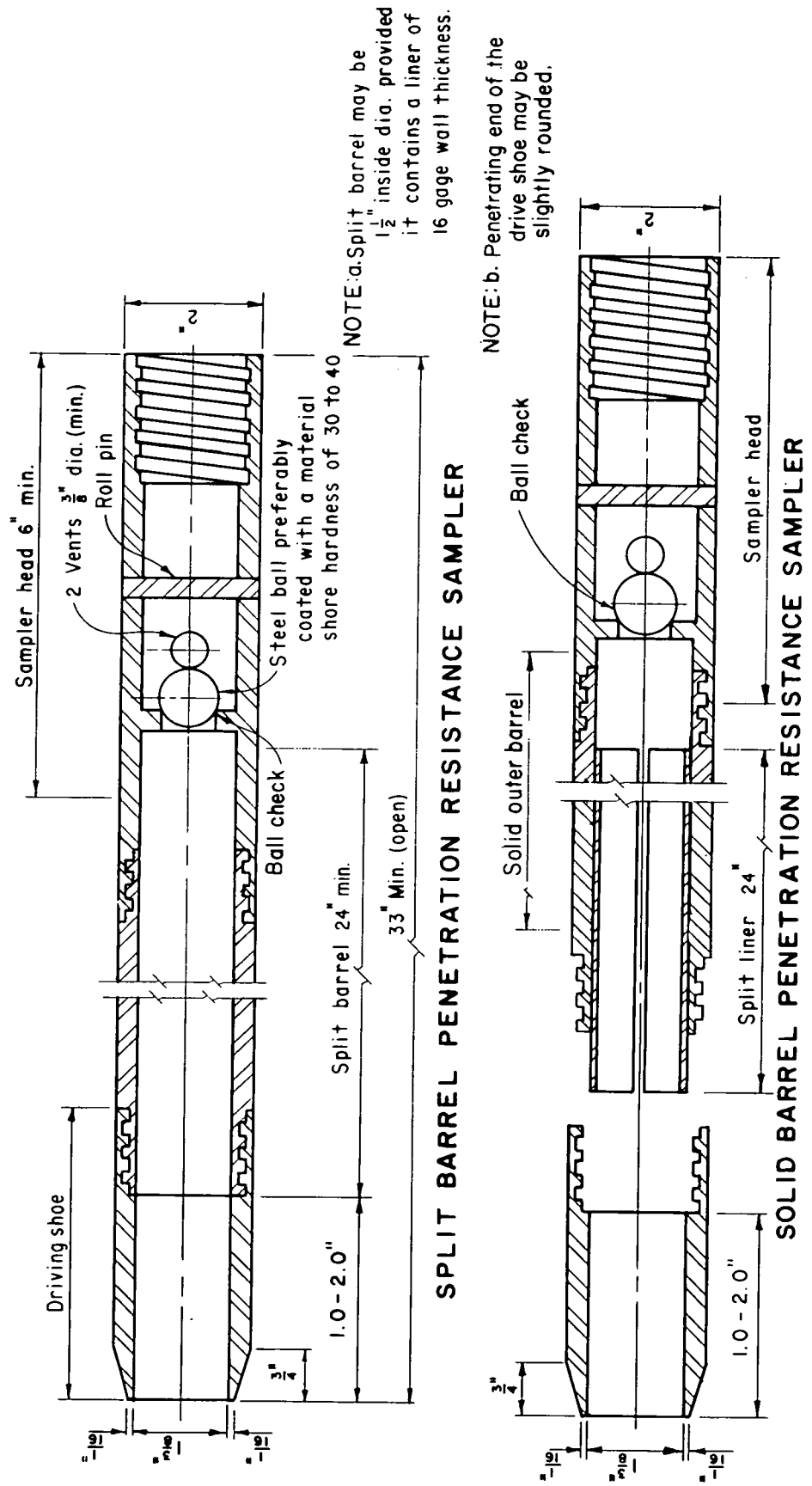

METRIC EQUIVALENTS

IN.	mm.	IN.	mm.
1/16 (16 gage)	1.5	2	50.8
1/2	12.7	3	76.2
3/4	19.0	6	152.4
7/8	22.2	24	690.6
1 3/8	34.9	33	838.2
1 1/2	38.1		

Figure 3. – Sampler requirements for penetration resistance testing.

8.2.8 Under adverse weather conditions such as heavy rain or snow, the results of penetration resistance testing using the rope and cathead method may be affected due to a change in rope-cathead friction. This effect should be evaluated in the field, and testing should cease if significant changes are evident.

9. Sampling, Test Specimens, and Test Units

9.1 Moisture content samples and, in some cases, samples for laboratory soil classification are obtained from recovered material. Care must be taken to minimize contamination. The mass of sample obtained for testing should be sufficient to ensure representative specimens (see USBR 5000 and 5300).

10. Preparation of Apparatus

10.1 *Drilling Equipment.*–Lubricate crown sheave(s), and replace cathead rope as necessary to maintain low friction travel of rope.

10.2 *Penetration Resistance Apparatus*:

10.2.1 Check drive weight assembly for compliance with requirements in subparagraph 7.4. Lubricate and clean the guide cap area and the area between the internal anvil and hammer (fig. 2) as required to minimize friction. Mark guide rod at 30-inch drop height.

10.2.2 Clean sampler ball check and vent ports (fig. 2) prior to each test.

11. Calibration and Standardization

11.1 Tentative calibration procedures have been developed for penetration resistance testing. The method consists of measuring the force–time history of a hammer blow on the drill string during actual testing. Calibrations are only performed for special studies. It is anticipated that conformance to equipment and procedural details given here will result in an acceptable range of energy delivered to the sampler.

12. Conditioning

12.1 Not applicable, special conditioning requirements are not needed for this procedure.

13. Hole Preparation Procedures

13.1 *Hole Preparation Procedures — General*:

13.1.1 Penetration resistance testing is typically performed at 5-foot intervals or when a significant change of materials is observed during drilling, unless otherwise specified.

13.1.2 The cleanout depth is measured to the nearest 0.1 foot and recorded on the "Penetration Resistance Daily Data" form (fig. 4).

13.1.3 Minimum penetration resistance interval is 2.5 feet with a 1.5-foot drive interval and 1.0-foot cleanout interval. Special attention to drilling methods is required to avoid disturbance at such close intervals.

13.1.4 The hole diameter should be restricted to 4 inches. It is recommended that penetration resistance testing and large diameter sampling not be combined in the same drill hole.

13.1.5 If an obstruction (such as coarse gravel, cobbles, boulders, debris, or a lithified layer) is encountered, it should be noted and can be removed by drilling through the interval of the obstruction. Do not use the sampler as a chopping bit. If disturbance below the obstructions is anticipated, it should be noted. In some cases, it may be necessary to abandon the boring.

13.1.6 Any drilling procedure is acceptable that provides a suitably clean, stable hole before insertion of the sampler and ensures that the penetration test is performed in essentially undisturbed soil. Each of the following methods has proved acceptable for some subsurface conditions. The subsurface conditions anticipated should be considered when selecting the drilling method to be used.

13.1.6.1 Open hole rotary drilling methods.

13.1.6.2 Hollow-stem continuous flight auger methods.

13.1.6.3 Wash boring methods.

13.1.6.4 Solid continuous flight auger methods.

13.1.7 Several drilling methods produce unacceptable borings. The process of jetting through an open tube sampler and then sampling with the penetration sampler when the desired depth is reached is not permitted. Also, it is not permissible to advance the boring for subsequent insertion of the sampler solely by means of previous sampling with the penetration resistance sampler.

13.2 *Rotary Drilling With Drilling Fluids*:

13.2.1 The use of drilling mud is *required* for all penetration resistance testing when the investigation is performed to evaluate liquefaction potential. Use of water, air, and air-foams is unacceptable for these studies. In special cases, use of water can be approved by the Denver Office staff responsible for the investigation (e.g., when environmental conditions preclude use of polymer muds).

The function of a drilling fluid is to aid in lifting the cuttings, to lubricate the bit, and to stabilize the walls of a drill hole. These functions are accomplished by mixing bentonite or synthetic polymers with water to form a fluid of higher density and viscosity than water. The bentonite or polymer is held in colloidal suspension within the water and interacts in such a manner as to increase the viscous drag on larger soil particles. This increase in viscous drag enables the fluid to lift large particles of cuttings that ordinarily would not be removed from the drill hole by water only. Wall stabilization is accomplished as the fluid penetrates the surrounding soil by the combination of the formation of an impervious filter cake and the increased density of the fluid acting on that cake. The lubricating effect is an added benefit due to introduction of a fluid at the cutting face of a drill hole. The fluid wets the cutting surface, cools the bit, and results in an increased advance rate and longer bit life.

Because of a large number of suppliers, the varying grades of drill fluid products, and the varying requirements of each project, it is impossible to provide an exact procedure for the design and mixing of drill fluids within

7-2409 (12-86) Bureau of Reclamation	PENETRATION RESISTANCE DAILY DATA	Designation USBR 7015 - 89

PROJECT Example	FEATURE Example	HOLE NO. DH-502
GROUND ELEVATION 6750.5 ft.	LOCATION 200' D/S Sta. 9+50	
FOREMAN	DRILLER	LOGGED BY	DATE
DRILLING METHOD Rotary, NX casing, 3-inch rockbit, Bentonite		

	TEST 1		TEST 2	
CLEANOUT DEPTH	40.3 ft.		43.3 ft.	
SEATING PENETRATION (0.5 ft. maximum)				
DEPTH TO SAMPLER TIP	40.1 ft.		43.2 ft.	
NO. OF BLOWS FOR STANDARD 0.5 ft. SEATING PENETRATION (50 blows max.*)	NO. OF BLOWS	PENETRATION*	NO. OF BLOWS	PENETRATION*
	6	0.5	15	0.5

TEST PENETRATION (1.0 ft. maximum)

NO. OF BLOWS FOR STANDARD 1.0 ft. PENETRATION TEST (50 blows max.*)	NO. OF BLOWS 0.5 - 1.0 ft	NO. OF BLOWS 1.0 - 1.5 ft	NO. OF BLOWS N	PENETRATION*	NO. OF BLOWS 0.5 - 1.0 ft	NO. OF BLOWS 1.0 - 1.5 ft	NO. OF BLOWS N	PENETRATION*
	8	11	19	1.0	5	50	N/A	0.8

DEPTH TO SAMPLER TIP	41.8 ft.			44.5 ft.		
DRIVE LENGTH (ft)/ (1) RECOVERY LENGTH (ft)/ (2) RECOVERY {RECOVERY / DRIVE} (%) (3)	(1) 1.5	(2) 1.2	(3) 80%	(1) 1.3	(2) 0.9	(3) 69%
VISUAL CLASSIFICATION AND DESCRIPTION OF SAMPLE	POORLY GRADED SAND: About 90% fine sand; about 10% nonplastic fines, moist, grey, organic material; maximum size, medium sand, no reaction with HCL. (SP)			TOP: SP, Same as 40.3-41.8 BOTTOM: SANDY SILT: About 60% low plasticity fines; quick dilatancy; about 35% fine sand; 5% fine subangular gravel.		
ROLL PHOTO NO.						
MOISTURE SAMPLE	JAR #48			JAR #4C (from ML)		

REMARKS: Test 1 : 0.2 ft. slough prior to test. Only 2 blows for 0.4 ft. penetration in 0.5-1.0 ft. intervals.

TEST 2 : 0.3 ft. slough, drove on coarse gravels or cobbles. Gravels must have fell out. Had to stop test at 0.5 ft. penetration and remark rods.

*IF 50 BLOWS DO NOT YIELD MAXIMUM PENETRATION, RECORD PENETRATION FOR 50 BLOWS AND DISCONTINUE TEST.

DRILLER _____ (signature) FOREMAN _____ (signature)

Figure 4. – Penetration resistance daily data — example.

the scope of the procedure. For more information on specific drill fluids, consult with local manufacturers or suppliers representatives.

NOTE 4.–In some areas, certain types of drill fluid products are not allowed by state and local environmental authorities. Before using any drill fluid product, check with the local authorities to determine its acceptability.

13.2.2 If ground water and/or saturated soil are encountered, use of drilling fluid is *preferred* rather than casing the drill hole. Stabilizing drilling mud is *preferred.*

13.2.3 The drilling fluid level within the borehole must be maintained at or above the in-place piezometric water level at all times during drilling, removal of drill rods, and sampling. When drilling in unstable soils at close testing intervals, it is also necessary to maintain fluid levels during extraction of the sampler. Withdraw the drill bit or sampler and rods slowly and maintain fluid level in the borehole. Maintaining the fluid level at ground surface is recommended as this provides the maximum beneficial effect and provides a constant and easily observable fluid level.

13.2.4 Record any loss of circulation of drilling fluid as an indication of voids in the soil or possibly very high permeability layers. Also, record any increases in circulation as an indication of possible layers with artesian pressure.

13.2.5 Record fluid circulation rates and any occurrence of excessive bit pressures.

13.2.6 Cleanout depth is to be determined to the nearest 0.1 foot. After removal of cuttings, slightly raise the drill bit and rods and cut off fluid circulation. After several minutes have elapsed, lower the drill bit and rods to check cleanout depth. If an excessive amount of cuttings (slough) is present in the drill hole (0.2 to 0.4 ft), continue circulation to remove this material and recheck the drill hole depth. Record the cleanout depth as the depth that the drilling bit initially reached and not when resting on the thickness of cuttings.

13.2.7 *Casing And Rotary Drilling.*–If casing is required, care must be exercised when driving the casing to avoid disturbance to the test interval. Casing should be kept as far above the test interval as possible through proper use of drill fluids. Keep detailed casing records.

13.3 *Auger Methods*:

13.3.1 The solid continuous flight auger method shall not be used for advancing the boring below a water table or below the upper confining bed of a confined cohesionless stratum that is under artesian pressure.

13.3.2 Do not advance augers into the test interval.

13.3.3 Cleanout depth is recorded on figure 4 as the depth to the end of the cutter head fingers.

13.3.4 Special precautions are required for use of auger systems in soft or loose deposits (less than 5 blows per foot for clays and less than 15 blows per foot for clean sands) and in soft or loose deposits below the water table. In soft or loose deposits below the water table, rotary drilling methods using drilling fluids are recommended. If auger systems are used in these conditions, follow the precautions in subparagraph 13.3.5.

13.3.5 In all cases, in soft or loose deposits, it is necessary to slow the feed rate of the augers as the test interval is approached. When using hollow stem augers in soft or loose deposits below the water table, the hollow stem must be filled with drilling fluid or water. Use procedures given in subparagraph 13.2.3 when using drill fluids. After the test interval is reached, it is necessary to remove solid augers from the hole or to raise slightly the hollow-stem augers and suspend the augers with a fork to prevent downward pressure on the test interval. If disturbance is evident when testing under these conditions, it may be necessary to raise and suspend the hollow-stem augers from 4 to 6 inches above the cleanout depth and to use thin wall drive tubes or other methods for clearing the final 4 to 6 inches of the hole.

14. Test Procedure

14.1 All data are to be recorded on the "Penetration Resistance Daily Data" form as shown on figure 4 or on a similar form.

14.2 The sampler is attached to the drill rods, with each rod joint securely tightened, and slowly lowered to the bottom of the hole. Do not drop the sampler and rods onto the soil to be sampled.

14.3 Determine and record the depth to the nearest 0.1 foot at which the sampler tip rests. Compute and record the thickness of slough. If excessive slough or cave (about 0.2 to 0.4 ft) is encountered at the bottom of the drill hole, remove the sampler and reclean the hole. The total amount of cuttings and slough should not exceed 0.4 foot (see subpar. 13.2.6 for cuttings).

14.4 Attach the safety hammer center guide rod assembly securely to the drill rods. Using light hammer blows, advance the sampler through slough, cave, or cuttings to the cleanout depth which is the beginning of the 1.5-foot drive interval.

14.5 Mark the drill rods in three successive 0.5-foot increments so the advance of the sampler under the impact of the hammer can be easily observed for each 0.5-foot increment.

14.6 Drive the sampler through the drive interval with blows from the 140-lbm hammer falling 30 inches, using the rope-cathead method with two nominal rope turns on the cathead. The operator should use approximately 1-3/4 to 2-1/4 rope turns on the cathead depending on whether the rope comes off the top or bottom of the cathead (fig. 1). The rope is thrown into, but not completely off of the cathead to minimize rope friction. Apply hammer blows at a rate of 20 to 40 blows per minute. The portion of drill rod above the hole collar should be held in a vertical position. Care must be exercised in obtaining an accurate 30-inch drop during the test as variations directly affect penetration resistance.

14.7 Count the number of blows applied in each of the 0.5-foot increments, and discontinue the test when one of the following occurs:

14.7.1 A total of 50 blows is applied in a 1.5-ft drive interval at depths of less than 100 feet. For depths of

greater than 100 feet consult the exploration team responsible for the investigation.

14.7.2 There is no observed advance of the sampler during application of 10 successive hammer blows.

14.7.3 The sampler is advanced the complete 1.5 feet without limiting blow counts as described in subparagraphs 14.7.1 or 14.7.2.

14.8 If the sampler penetrates part of the 1.5-foot drive interval under the static mass of the rods or the rods and hammer assembly, record the penetration distance on the data form (fig. 4). Drive the sampler through the remainder of the 1.5-foot drive interval using the procedure in subparagraph 14.6.

14.9 If the sampler penetrates the complete 1.5-foot drive interval under the static mass of the rods or the rods and hammer assembly, attempt to retrieve the sample.

14.10 Record the number of hammer blows for each 0.5 foot of penetration or fraction thereof. The first 0.5 foot is the seating interval. The sum of the number of blows to penetrate the 0.5- to 1.5-foot test interval is termed the penetration resistance or N value. If the sampler is driven less than 1.5 feet (as permitted in subpar. 14.7.1 and 14.7.2), the number of blows to penetrate each complete 0.5-foot increment or each partial increment is to be recorded. Determine partial penetration to the nearest 0.1 foot and record with the appropriate number of blows. Note any irregularities in penetration. (For example: If, within a 0.5-foot interval, only two blows result in 0.4-foot penetration but six additional blows are required to drive the remaining 0.1 foot, the variation should be noted and recorded.) Record the drive length as the sum of the distances penetrated in the seating and test intervals.

NOTE 5.–When performing penetration resistance testing for liquefaction potential evaluation in gravelly alluvium, the number of blows per 0.1 foot of penetration will be recorded. The purpose of this is to obtain extrapolated sand N values so the influence of gravel on the N value can be evaluated.

14.11 To remove the sampler, apply two clockwise turns to the rods to shear the soil at the bottom of the sampler. The hammer can be used to backtap the drill string to free the sampler. Withdraw the drill string slowly and detach the sampler from the drill rods.

14.12 Determine and record recovery length of the sample to the nearest 0.1 foot. Do not include slough and cuttings in the recovery length. Calculate and record the percent recovery.

14.13 Calculate and record the N value. Calculate the N value only if penetration of the complete 1.0-foot test interval was achieved.

14.14 Perform a visual classification and description of the soil(s) obtained from the sampler in accordance with USBR 5005 and record. If the sample mass is insufficient for a representative classification, the sample is still to be classified and this fact noted on the data form.

14.15 Determine and record the moisture content of the sample in accordance with USBR 5300. If the sample mass is insufficient for a reliable moisture content determination, this should be noted. If the sample is homogeneous, the moisture content sample can be obtained from the driving shoe. If more than one type of soil is encountered, perform separate moisture content determinations for each soil. Avoid contamination by drilling fluids. Obtain samples as promptly as possible and seal in airtight containers. Record moisture content information.

14.16 *Laboratory Classifications.*–If required, classifications will be performed in accordance with USBR 5000. If the sample mass is insufficient for representative classification, this fact should be noted on the data form and drill log. Indicate location of samples under the *Remarks* section on the data form.

14.17 Preserve the remaining sample to retard moisture loss, and mark the sample container with the following information:

- Sample number
- Date
- Depth
- Drill hole number
- Location
- Project
- Feature

Protect the core from breakage. Note the presence of slough or contamination in retained samples.

14.18 *Ground-water Information.*–For holes drilled with bentonite mud, ground-water information is of questionable reliability; however, it should be monitored. Monitor ground-water levels before and after removal of protective casings or augers. Obtain ground-water levels at time periods suitable for the material encountered during drilling and after hole completion. Ground-water elevations should be measured daily and recorded on data forms. Where possible, a sufficient number of holes should be left open and vented caps provided to allow observations to be made over a period of days. In clean coarse-grained soils, shorter monitoring times may yield stabilized ground-water information; while in fine-grained soils longer time periods—24 hours or greater—may be required. If ground water is not encountered or if the level is of doubtful reliability, such information also should be reported. Note if hole caving or closure occurs during observations.

15. Calculations

15.1 Calculate the N value (standard penetration resistance) using the following expression:

$$N = \text{(No. of blows from 0.5 to 1.0 ft)} + \text{(No. of blows from 1.0 to 1.5 ft)} \quad (1)$$

The N value is calculated only if penetration was achieved for the complete 1.0-foot test interval.

15.2 Calculate percent recovery.

$$\text{Percent recovery} = 100\left(\frac{\text{recovered length, ft}}{\text{drive length, ft}}\right) \quad (2)$$

where 100 is the conversion to percent.

16. Report

16.1 The report is to consist of the following completed forms:

16.1.1 *Penetration Resistance Daily Data* (fig. 4).–The daily data form is not submitted routinely as design data but should be available for review if more detailed examination of data is required.

16.1.2 *Log Forms.*–For continuity of data presentation, the log format should follow those shown in appendix X1. The format is established with the "Subsurface Exploration — Penetration Resistance and Log" form as shown in appendix X1. Penetration resistance value *N* should be plotted in graphical form in the center portion of the form. Notes from the daily data form (such as those which indicate reliability, irregularities, and equipment used) should be included on this form.

16.1.3 *Special Cases.*–In special cases, penetration resistance testing is combined with other testing which must be included on the log form. In these cases, log forms may be modified to show pertinent data.

17. Background Reference

Annual Book of ASTM Standards, Designation D-1586 Standard Method for Penetration Test and Split Barrel Sampling of Soils.

APPENDIX

X1. EXAMPLE FORMS

The example log shown on figure X1.1 was generated by computer using the program NGEOSUB. This program uses the Bureau of Reclamation CYBER computer and provides 35-mm microfilm using COMp80 microfilm equipment. The program generates logs of other testing in addition to standard penetration tests. The program was developed and is maintained by the geology staff in the Bureau's Lower Colorado Region and the Geotechnical Engineering and Geology Division (Denver Office). The primary benefit of using the computer-generated log is the ease of making editorial revisions as required during review. Logs can be constructed also on the "Subsurface Exploration — Penetration Resistance and Log" form as shown on figure X1.2.

When laboratory classification data are obtained on penetration resistance samples, these data should be shown separately on the log. The right column of the boring log is used to report visual classification and description of materials as observed in the field. Soil classification information in this column should not be supplemented or revised to reflect laboratory test results except for obvious omissions or errors. Use of laboratory test data to improve visual classification skills is encouraged. It is recommended that laboratory data be shown in a tabular form within the center column portion of the log form after sample interval information similar to the example log figure X1.1. This table should provide information on sampling interval, laboratory soil classification symbol, percentages of gravel, sand and fines, and liquid limit and plastic limit.

The example log on figure X1.1 exhibits several penetration resistance testing situations which require notes and precautions concerning nonstandard test results or possibilities of unreliable data. This example log can be used as a guide on how to note such occurrences. It is important that the conditions, such as shown on the example log, are included on the actual logs to caution users as to reliability of data.

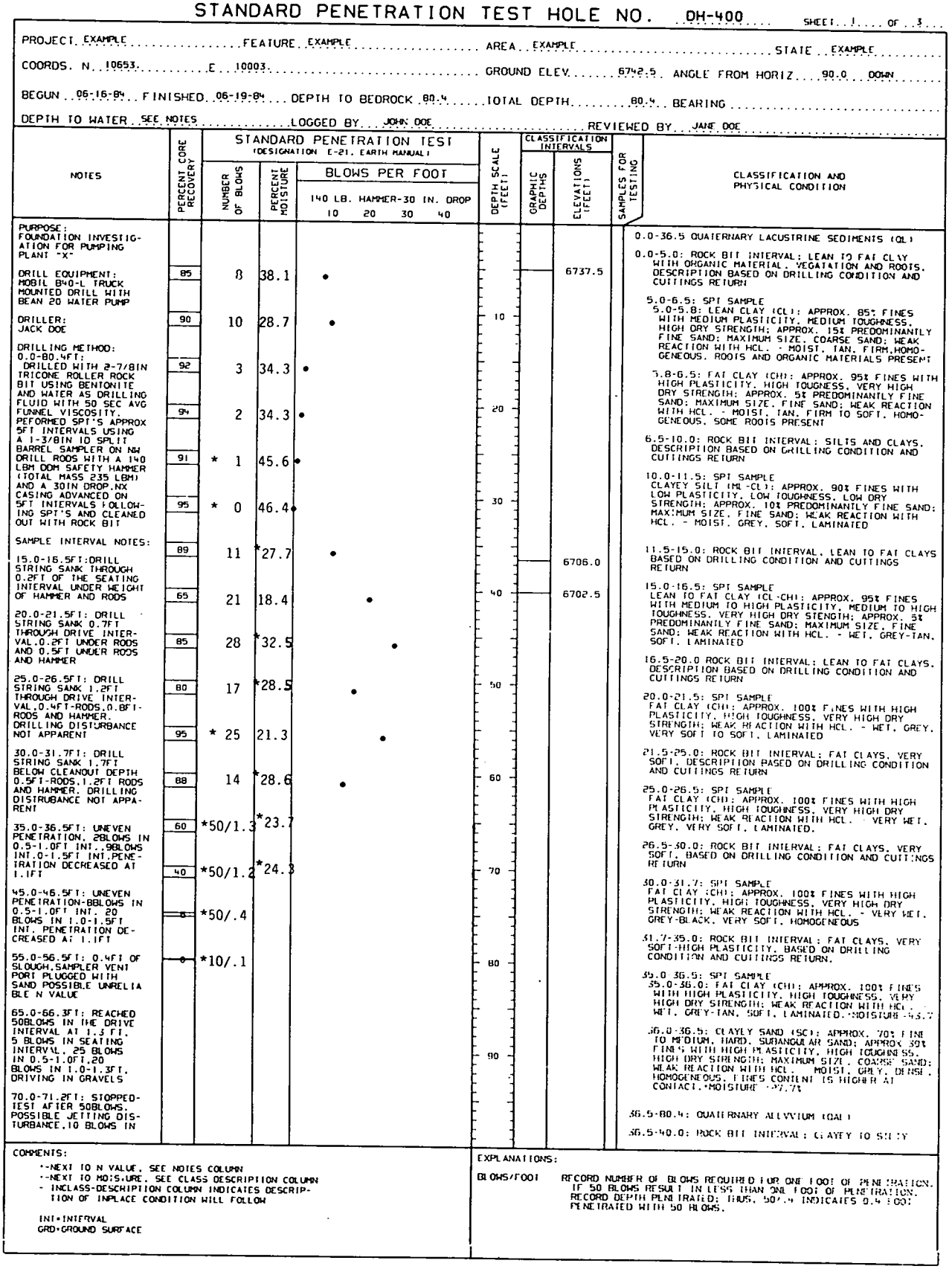

STANDARD PENETRATION TEST HOLE NO. DH-400 SHEET 1 OF 3

PROJECT. EXAMPLE FEATURE. EXAMPLE AREA. EXAMPLE STATE. EXAMPLE

COORDS. N. 10653. E. 10003. GROUND ELEV. 6742.5 ANGLE FROM HORIZ. 90.0 DOWN

BEGUN. 06-16-84 FINISHED. 06-19-84 DEPTH TO BEDROCK 80.4 TOTAL DEPTH. 80.4 BEARING

DEPTH TO WATER. SEE NOTES LOGGED BY. JOHN DOE REVIEWED BY. JANE DOE

NOTES

PURPOSE:
FOUNDATION INVESTIGATION FOR PUMPING PLANT "X"

DRILL EQUIPMENT:
MOBIL B40-L TRUCK MOUNTED DRILL WITH BEAN 20 WATER PUMP

DRILLER:
JACK DOE

DRILLING METHOD:
0.0-80.4FT:
DRILLED WITH 2-7/8IN TRICONE ROLLER ROCK BIT USING BENTONITE AND WATER AS DRILLING FLUID WITH 50 SEC AVG FUNNEL VISCOSITY. PEFORMED SPT'S APPROX 5FT INTERVALS USING A 1-3/8IN ID SPLIT BARREL SAMPLER ON NW DRILL RODS WITH A 140 LBM DOM SAFETY HAMMER (TOTAL MASS 235 LBM) AND A 30IN DROP.NX CASING ADVANCED ON 5FT INTERVALS FOLLOWING SPT'S AND CLEANED OUT WITH ROCK BIT

SAMPLE INTERVAL NOTES:

15.0-16.5FT:DRILL STRING SANK THROUGH 0.2FT OF THE SEATING INTERVAL UNDER WEIGHT OF HAMMER AND RODS

20.0-21.5FT: DRILL STRING SANK 0.7FT THROUGH DRIVE INTERVAL.0.2FT UNDER RODS AND 0.5FT UNDER RODS AND HAMMER

25.0-26.5FT: DRILL STRING SANK 1.2FT THROUGH DRIVE INTERVAL,0.4FT-RODS,0.8FT-RODS AND HAMMER. DRILLING DISTURBANCE NOT APPARENT

30.0-31.7FT: DRILL STRING SANK 1.7FT BELOW CLEANOUT DEPTH 0.5FT-RODS,1.2FT RODS AND HAMMER. DRILLING DISTRUBANCE NOT APPARENT

35.0-36.5FT: UNEVEN PENETRATION, 2BLOWS IN 0.5-1.0FT INT.,9BLOWS INT.0-1.5FT INT.PENETRATION DECREASED AT 1.1FT

45.0-46.5FT: UNEVEN PENETRATION-8BLOWS IN 0.5-1.0FT INT. 20 BLOWS IN 1.0-1.5FT INT. PENETRATION DECREASED AT 1.1FT

55.0-56.5FT: 0.4FT OF SLOUGH,SAMPLER VENT PORT PLUGGED WITH SAND POSSIBLE UNRELIABLE N VALUE

65.0-66.3FT: REACHED 50BLOWS IN THE DRIVE INTERVAL AT 1.3 FT. 5 BLOWS IN SEATING INTERVAL, 25 BLOWS IN 0.5-1.0FT,20 BLOWS IN 1.0-1.3FT. DRIVING IN GRAVELS

70.0-71.2FT: STOPPED TEST AFTER 50BLOWS. POSSIBLE JETTING DISTURBANCE,10 BLOWS IN

PERCENT CORE RECOVERY	NUMBER OF BLOWS	PERCENT MOISTURE	BLOWS PER FOOT (140 LB. HAMMER-30 IN. DROP)
85	8	38.1	
90	10	28.7	
92	3	34.3	
94	2	34.3	
91	* 1	45.6	
95	* 0	46.4	
89	11	*27.7	
65	21	18.4	
85	28	*32.5	
80	17	*28.5	
95	* 25	21.3	
88	14	*28.6	
60	*50/1.3	*23.7	
40	*50/1.2	*24.3	
0	*50/.4		
0	*10/.1		

DEPTH SCALE (FEET): 10, 20, 30, 40, 50, 60, 70, 80, 90

CLASSIFICATION INTERVALS — GRAPHIC DEPTHS / ELEVATIONS (FEET)

SAMPLES FOR TESTING

CLASSIFICATION AND PHYSICAL CONDITION

0.0-36.5 QUATERNARY LACUSTRINE SEDIMENTS (QL)

0.0-5.0: ROCK BIT INTERVAL; LEAN TO FAT CLAY WITH ORGANIC MATERIAL. VEGATATION AND ROOTS. DESCRIPTION BASED ON DRILLING CONDITION AND CUTTINGS RETURN — 6737.5

5.0-6.5: SPT SAMPLE
5.0-5.8: LEAN CLAY (CL): APPROX. 85% FINES WITH MEDIUM PLASTICITY, MEDIUM TOUGHNESS, HIGH DRY STRENGTH; APPROX. 15% PREDOMINANTLY FINE SAND; MAXIMUM SIZE, COARSE SAND; WEAK REACTION WITH HCL. - MOIST, TAN, FIRM,HOMOGENEOUS. ROOTS AND ORGANIC MATERIALS PRESENT

5.8-6.5: FAT CLAY (CH): APPROX. 95% FINES WITH HIGH PLASTICITY, HIGH TOUGHNESS, VERY HIGH DRY STRENGTH; APPROX. 5% PREDOMINANTLY FINE SAND; MAXIMUM SIZE, FINE SAND; WEAK REACTION WITH HCL. - MOIST, TAN, FIRM TO SOFT, HOMOGENEOUS. SOME ROOTS PRESENT

6.5-10.0: ROCK BIT INTERVAL; SILTS AND CLAYS. DESCRIPTION BASED ON DRILLING CONDITION AND CUTTINGS RETURN

10.0-11.5: SPT SAMPLE
CLAYEY SILT (ML-CL): APPROX. 90% FINES WITH LOW PLASTICITY, LOW TOUGHNESS, LOW DRY STRENGTH; APPROX. 10% PREDOMINANTLY FINE SAND; MAXIMUM SIZE, FINE SAND; WEAK REACTION WITH HCL. - MOIST, GREY, SOFT, LAMINATED

11.5-15.0: ROCK BIT INTERVAL, LEAN TO FAT CLAYS BASED ON DRILLING CONDITION AND CUTTINGS RETURN — 6706.0

15.0-16.5: SPT SAMPLE
LEAN TO FAT CLAY (CL-CH): APPROX. 95% FINES WITH MEDIUM TO HIGH PLASTICITY, MEDIUM TO HIGH TOUGHNESS, VERY HIGH DRY STENGTH; APPROX. 5% PREDOMINANTLY FINE SAND; MAXIMUM SIZE, FINE SAND; WEAK REACTION WITH HCL. - WET, GREY-TAN, SOFT, LAMINATED — 6702.5

16.5-20.0 ROCK BIT INTERVAL; LEAN TO FAT CLAYS. DESCRIPTION BASED ON DRILLING CONDITION AND CUTTINGS RETURN

20.0-21.5: SPT SAMPLE
FAT CLAY (CH): APPROX. 100% FINES WITH HIGH PLASTICITY, HIGH TOUGHNESS, VERY HIGH DRY STRENGTH; WEAK REACTION WITH HCL. - WET, GREY, VERY SOFT TO SOFT, LAMINATED

21.5-25.0: ROCK BIT INTERVAL; FAT CLAYS, VERY SOFT. DESCRIPTION BASED ON DRILLING CONDITION AND CUTTINGS RETURN

25.0-26.5: SPT SAMPLE
FAT CLAY (CH): APPROX. 100% FINES WITH HIGH PLASTICITY, HIGH TOUGHNESS, VERY HIGH DRY STRENGTH; WEAK REACTION WITH HCL. - VERY WET, GREY, VERY SOFT, LAMINATED.

26.5-30.0: ROCK BIT INTERVAL; FAT CLAYS, VERY SOFT, BASED ON DRILLING CONDITION AND CUTTINGS RETURN

30.0-31.7: SPT SAMPLE
FAT CLAY (CH): APPROX. 100% FINES WITH HIGH PLASTICITY, HIGH TOUGHNESS, VERY HIGH DRY STRENGTH; WEAK REACTION WITH HCL. - VERY WET, GREY-BLACK, VERY SOFT, HOMOGENEOUS

31.7-35.0: ROCK BIT INTERVAL; FAT CLAYS, VERY SOFT-HIGH PLASTICITY, BASED ON DRILLING CONDITION AND CUTTINGS RETURN.

35.0-36.5: SPT SAMPLE
35.0-36.0: FAT CLAY (CH): APPROX. 100% FINES WITH HIGH PLASTICITY, HIGH TOUGHNESS, VERY HIGH DRY STRENGTH; WEAK REACTION WITH HCL. - WET, GREY-TAN, SOFT, LAMINATED. *MOISTURE -45.7

36.0-36.5: CLAYEY SAND (SC): APPROX. 70% FINE TO MEDIUM, HARD, SUBANGULAR SAND; APPROX 30% FINES WITH HIGH PLASTICITY, HIGH TOUGHNESS, HIGH DRY STRENGTH; MAXIMUM SIZE, COARSE SAND; WEAK REACTION WITH HCL. - MOIST, GREY, DENSE, HOMOGENEOUS. FINES CONTENT IS HIGHER AT CONTACT. *MOISTURE -27.7%

36.5-80.4: QUATERNARY ALLUVIUM (QAL)

36.5-40.0: ROCK BIT INTERVAL; CLAYEY TO SILTY

COMMENTS:
*-NEXT TO N VALUE, SEE NOTES COLUMN
*-NEXT TO MOISTURE, SEE CLASS DESCRIPTION COLUMN
- INCLASS-DESCRIPTION COLUMN INDICATES DESCRIPTION OF INPLACE CONDITION WILL FOLLOW

INT=INTERVAL
GRD=GROUND SURFACE

EXPLANATIONS:

BLOWS/FOOT — RECORD NUMBER OF BLOWS REQUIRED FOR ONE FOOT OF PENETRATION. IF 50 BLOWS RESULT IN LESS THAN ONE FOOT OF PENETRATION, RECORD DEPTH PENETRATED; THUS, 50/.4 INDICATES 0.4 FOOT PENETRATED WITH 50 BLOWS.

Figure X1.1. – Subsurface exploration — penetration resistance and log — example.

STANDARD PENETRATION TEST HOLE NO. DH-400 SHEET 2 OF 3

PROJECT EXAMPLE FEATURE EXAMPLE AREA EXAMPLE STATE EXAMPLE

COORDS. N 10653 E 10003 GROUND ELEV. 6742.5 ANGLE FROM HORIZ. 90.0 DOWN

BEGUN 06-16-84 FINISHED 06-19-84 DEPTH TO BEDROCK 80.4 TOTAL DEPTH 80.4 BEARING

DEPTH TO WATER SEE NOTES LOGGED BY JOHN DOE REVIEWED BY JANE DOE

NOTES

SEATING INTERVAL,10 BLOWS IN FIRST 0.5 -1.0FT INTERVAL 30 BLOWS IN 1.0-1.2FT DRIVING ON COBBLE OR COARSE GRAVELS

75.0-75.4FT: 50 BLOWS FOR 0.4FT IN SEATING INTERVAL,DRIVING ON COBBLES.

80.0-80.1FT: STOPPED TEST AFTER 10 BLOWS RESULTED IN LESS THAN 0.1FT PENETRATION DRIVING ON COBBLES

DRILLING CONDITIONS:

0.0-45.0FT: DRILLING SMOOTH,CASING DRIVES EASILY

45.0-65.0FT: DRILLING SMOOTH,TO CHOPPY CASING DROVE FAIRLY EASY.

65.0-80.4FT: DRILLING HARD AND CHOPPY, CASING DROVE HARD

FLUID RETURN:

0.0-35.0FT	95%
35.0-45.0FT	70%
45.0-55.0FT	65%
55.0-60.0FT	75%
60.0-80.4FT	40%

CASING RECORD:

DATE	HOLE SZ	CASING DEPTH	HOLE DEPTH
6/16	NX	15.0	14.0
6/17	NX	33.0	32.0
6/18	NX	70.0	70.0
6/19	NX	80.4	GRD

WATER LEVELS DURING DRILLING:

DATE	HOLE DEPTH	WATER DEPTH
6/16	15.0	4.0
6/17	33.0	3.0
6/18	70.0	GRD
6/19	80.4	GRD

WATER LEVELS AFTER DRILLING:

DATE	HOLE DEPTH	WATER LEVEL
6/19	80.4	GRD
6/19	*75.0	GRD
6/20	*65.0	GRD

*AFTER CASING PULLED. HOLE CAVING,WATER FLOWING AT GRD.-SURFACE, ESTIMATE 3FT HEAD. FLOW AT 10GAL/MIN

HOLE COMPLETION:
PULLED 80FT OF NX CASING. GROUTED FROM 65.0 TO SURFACE WITH CEMENT-BENTONITE SLURRY(2BAG CEMENT,2 BAG BENTONITE TO 50 GAL WATER)

PERCENT CORE RECOVERY	STANDARD PENETRATION TEST (DESIGNATION E-21, EARTH MANUAL) NUMBER OF BLOWS	PERCENT MOISTURE	BLOWS PER FOOT 140 LB. HAMMER-30 IN. DROP 10 20 30 40	DEPTH SCALE (FEET)	CLASSIFICATION INTERVALS GRAPHIC DEPTHS	CLASSIFICATION INTERVALS ELEVATIONS (FEET)	SAMPLES FOR TESTING
				110 120 130 140 150 160 170 180 190			

CLASSIFICATION AND PHYSICAL CONDITION

SANDS, MAXIMUM SIZE, COARSE SAND, DESCRIPTION BASED ON DRILLING CONDITIONS AND CUTTINGS RETURN

40.0-41.5: SPT SAMPLE
POORLY GRADED SAND (SP-SM): APPROX. 90% FINE TO COARSE, HARD, SUBANGULAR TO SUBROUNDED SAND; APPROX. 10% NONPLASTIC FINES; MAXIMUM SIZE, COARSE SAND; - WET, GREY, DENSE, HOMOGENEOUS

41.5-45.0: ROCK BIT INTERVAL; POORLY GRADED SAND, SILTY SAND AND SCATTERED GRAVELS, DESCRIPTION BASED ON DRILLING CONDITION AND CUTTINGS RETURN

45.0-46.5: SPT SAMPLE
45.0-46.0: SILTY SAND (SM); APPROX. 70% FINE TO COARSE, HARD, SUBANGULAR TO SUBROUNDED SAND; APPROX. 25% NONPLASTIC FINES; APPROX. 5% PREDOMINANTLY FINE, HARD, SUBANGULAR GRAVEL; MAXIMUM SIZE, FINE GRAVEL, - VERY WET, GREY, DENSE, STRATIFIED LAYERS.*MOISTURE CONTENT=21.7%

46.0-46.3:*SILTY GRAVEL (GM); APPROX. 40% PREDOMINANTLY FINE, HARD, SUBANGULAR GRAVEL; APPROX. 35% COARSE TO FINE, HARD, SUBANGULAR TO SUBROUNDED SAND; APPROX. 25% NONPLASTIC FINES; MAXIMUM SIZE, FINE GRAVEL, - VERY WET, GREY, DENSE, HOMOGENEOUS. *MOISTURE CONTENT =32.5%

*NOTE: INSUFFICIENT SPECIMEN MASS FOR REPRESENTATIVE VISUAL CLASSIFICATION AND MOISTURE DETERMINATION. DETERMINATIONS PERFORMED ON AVAILABLE MATERIAL.

46.5-50.0: ROCK BIT INTERVAL; POORLY GRADED SAND WITH SCATTERED LENSES OF SILTY SAND AND SILTY GRAVEL, DESCRIPTION BASED ON DRILLING CONDITIONS AND CUTTINGS RETURN.

50.0-51.5: SPT SAMPLE
50.0-50.6: POORLY GRADED SAND (SP-SM): APPROX. 90% PREDOMINANTLY FINE SAND; APPROX 10% NONPLASTIC FINES; MAXIMUM SIZE, MEDIUM SAND, - VERY WET, BLACK, DENSE, HOMOGENEOUS

50.6-51.0: SILTY SAND (SM-ML): APPROX. 50% PREDOMINANTLY FINE SAND; APPROX. 50% NONPLASTIC FINES WITH QUICK DILATENCY; NO REACTION WITH HCL, - WET, GREY, SOFT, LAMINATED.*MOISTURE CONTENT=28.3%

51.0-51.5: POORLY GRADED SAND (SP-SM): SAME AS INTERVAL 50.0-50.6

51.5-55.0 ROCK BIT INTERVAL; POORLY GRADED SAND ,SILTY SAND WITH SCATTERED GRAVELS, DESCRIPTION BASED ON DRILLING CONDITIONS AND CUTTINGS RETURN

55.0-56.5: SPT SAMPLE
SILTY SAND (SM): APPROX. 60% PREDOMINANTLY FINE SAND; APPROX. 40% NON-PLASTIC FINES, QUICK DILATENCY; NO REACTION WITH HCL, - VERY WET, GREY, LOOSE, LAMINATED LAYERS WITH SLIGHT VARIATION IN FINES CONTENT

56.5-60.0: ROCK BIT INTERVAL; SILTY SAND, DESCRIPTION BASED ON DRILLING CONDITIONS AND CUTTINGS RETURN.

60.0-61.5: SPT SAMPLE: STRATIFIED LAYERS OF SILTY SAND AND SILT, AVERAGE LAYER THICKNESS IS 5MM SILT AND 10MM SILTY SAND

SILTY SAND (SM-ML): SAME AS INTERVAL 50.6 TO 51.0

SILT (ML): APPROX. 60% FINES WITH LOW PLASTICITY, NO TOUGHNESS, SLOW TO VERY SLOW DILATENCY; APPROX. 40% PREDOMINANTLY FINE SAND; MAXIMUM SIZE, FINE SNAD; NO REACTION WITH HCL, -*WET, GREY, SOFT, HOMOGENEOUS.

*NOTE- MOISTURE CONTENT ON LOG IS AN AVERAGE VALUE FROM BOTH MATERIALS.

61.5-62.5: ROCK BIT INTERVAL; SILTY SAND, DESCRIPTION BASED ON DRILLING CONDITIONS AND CUTTINGS RETURN.

62.5-65.0: ROCK BIT INTERVAL; SILTY GRAVELS, DESCRIPTION BASED ON DRILLING CONDITIONS AND CUTTINGS RETURN.

COMMENTS:
*-NEXT TO N VALUE, SEE NOTES COLUMN
*-NEXT TO MOISTURE, SEE CLASS-DESCRIPTION COLUMN
- INCLASS-DESCRIPTION COLUMN INDICATES DESCRIPTION OF INPLACE CONDITION WILL FOLLOW

INT=INTERVAL
GRD=GROUND SURFACE

EXPLANATIONS:

BLOWS/FOOT RECORD NUMBER OF BLOWS REQUIRED FOR ONE FOOT OF PENETRATION. IF 50 BLOWS RESULT IN LESS THAN ONE FOOT OF PENETRATION, RECORD DEPTH PENETRATED: THUS, 50/.4 INDICATES 0.4 FOOT PENETRATED WITH 50 BLOWS.

Figure X1.1. – Subsurface exploration — penetration resistance and log — example—continued.

STANDARD PENETRATION TEST HOLE NO. DH-400 SHEET 3 OF 3

PROJECT EXAMPLE FEATURE EXAMPLE AREA EXAMPLE STATE EXAMPLE

COORDS. N 10653 E 10003 GROUND ELEV. 6742.5 ANGLE FROM HORIZ. 90.0 DOWN

BEGUN 06-16-84 FINISHED 06-19-84 DEPTH TO BEDROCK 80.4 TOTAL DEPTH 80.4 BEARING

DEPTH TO WATER SEE NOTES LOGGED BY JOHN DOE REVIEWED BY JANE DOE

NOTES	PERCENT CORE RECOVERY	STANDARD PENETRATION TEST (DESIGNATION E-21, EARTH MANUAL) NUMBER OF BLOWS	PERCENT MOISTURE	BLOWS PER FOOT 140 LB. HAMMER-30 IN. DROP 10 20 30 40	DEPTH SCALE (FEET)	CLASSIFICATION INTERVALS GRAPHIC DEPTHS	CLASSIFICATION INTERVALS ELEVATIONS (FEET)	SAMPLES FOR TESTING	CLASSIFICATION AND PHYSICAL CONDITION
					210 220 230 240 250 260 270 280 290				65.0-66.3: SPT SAMPLE *SILTY GRAVEL (GM-SM): APPROX. 40% PREDOMINANTLY FINE, HARD, SUBANGULAR TO SUB ROUNDED GRAVEL; APPROX. 40% COARSE TO FINE, HARD, SUBANGULAR SAND, APPROX. 20% NON-PLASTIC FINES; MAXIMUM SIZE, 25MM. - VERY WET, GREY, LOOSE, HETEROGENEOUS. *NOTE: INSUFFICIENT SPECIMEN MASS FOR A REPRESENTATIVE VISUAL CLASSIFICATION AND MOISTURE DETERMINATION 66.3-70.0: ROCK BIT INTERVAL: POORLY GRADED GRAVELS AND SILTY GRAVELS, DESCRIPTION BASED ON DRILLING CONDITIONS AND CUTTINGS RETURN. 70.0-71.2: SPT SAMPLE: *SILTY GRAVEL (GM-SM): SAME AS INTERVAL 65.0-66.3 *NOTE: INSUFFICIENT SPECIMEN MASS TO ASSURE REPRESENTATIVE VISUAL CLASSIFICATION AND MOISTURE CONTENT DETERMINATIONS 71.2-75.0: ROCK BIT INTERVAL: POORLY GRADED GRAVELS WITH COBBLES AND SILTY GRAVELS, DESCRIPTION BASED ON DRILLING CONDITIONS AND CUTTINGS RETURN 75.0-75.4: SPT SAMPLE: 35MM PIECE OF GRAVEL WEDGED IN SHOE, INSUFFICIENT SAMPLE. 75.4-80.0: ROCK BIT INTERVAL: SILTY GRAVEL WITH COBBLES AND BOULDERS, DESCRIPTION BASED ON DRILLING CONDITIONS AND CUTTINGS RETURN. 80.0-80.1: SPT SAMPLE: NO RECOVERY

COMMENTS:

*-NEXT TO N VALUE, SEE NOTES COLUMN
*-NEXT TO MOISTURE, SEE CLASS-DESCRIPTION COLUMN
- INCLASS-DESCRIPTION COLUMN INDICATES DESCRIPTION OF INPLACE CONDITION WILL FOLLOW

INT-INTERVAL
GRD-GROUND SURFACE

EXPLANATIONS:

BLOWS/FOOT RECORD NUMBER OF BLOWS REQUIRED FOR ONE FOOT OF PENETRATION. IF 50 BLOWS RESULT IN LESS THAN ONE FOOT OF PENETRATION, RECORD DEPTH PENETRATED: THUS, 50/.4 INDICATES 0.4 FOOT PENETRATED WITH 50 BLOWS.

Figure X1.1. - Subsurface exploration — penetration resistance and log — example—continued.

7-1334A (9-71)
Bureau of Reclamation

SUBSURFACE EXPLORATION - PENETRATION RESISTANCE AND LOG

Feature _____ Project _____ State _____

Hole No. PR- _____ Coordinates N. _____ E. _____ Ground Elevation _____

Depth and Elev. of Water Level* _____ Location _____ Total Depth _____

*Date Measured _____ Date Begun _____ Finished _____ Logged by _____ Approved by _____

NOTES Water losses, type and size of hole, drilling method and conditions, Caving and other information	CORE RECOVERY-%	BLOWS/FOOT	WATER CONTENT-%	SAMPLES FOR TESTING	DEPTH (FT.)	GRAPHIC LOG	PENETRATION RESISTANCE Blows per Foot Weight of Hammer _____ lb. Height of Drop _____ in. 0 10 20 30 40 50	* CLASSIFICATION AND DESCRIPTION OF MATERIAL
					10 20 30 40 50 60 70 80 90			

EXPLANATION

BLOWS/FOOT • — Record number of blows required for one foot of penetration. If 50 blows result in less than one foot of penetration, record depth penetrated; thus, 50/.4 indicates 0.4 foot penetrated with 50 blows.

PENETRATION RESISTANCE — Plot, as shown at right. Actual values ●.

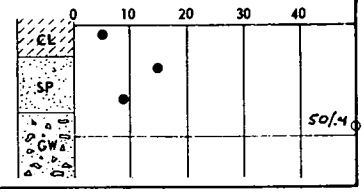

FEATURE _____ PROJECT _____ STATE _____ HOLE NO. PR- _____

GPO 838-002

Figure X1.2. – Subsurface exploration — penetration resistance and log.

UNITED STATES DEPARTMENT OF THE INTERIOR
BUREAU OF RECLAMATION

USBR 7020-89

PROCEDURE FOR

PERFORMING CONE PENETRATION TESTING OF SOILS — MECHANICAL METHOD

INTRODUCTION

This procedure is under the jurisdiction of the Geotechnical Services Branch, code D-3760, Research and Laboratory Services Division, Denver Office, Denver, Colorado. The procedure is issued under the fixed designation USBR 7020. The number immediately following the designation indicates the year of acceptance or the year of last revision.

1. Scope

1.1 This designation outlines the procedure for determining the resistance to penetration of a conical pointed penetrometer as it is advanced into subsurface soils at a slow, steady rate.

1.2 This method can also be used to determine the frictional resistance of a cylindrical sleeve located behind the conical point as it is advanced through subsurface soils at a slow, steady rate.

1.3 This method includes the use of both cone and friction cone penetrometers of the mechanical type.

1.4 Cone penetration test data can be used to interpret subsurface stratigraphy, and through use of correlations, can provide data on engineering properties of soils intended for use in design and construction of earthworks and foundations for structures.

1.5 The test is limited to use in soils whose maximum particle size is less than approximately twice the cone diameter.

NOTE 1.—This method does not include hydraulic pneumatic penetrometers. However, many of the requirements herein could apply to those penetrometers.

2. Auxiliary Tests

2.1 When site-specific correlations are to be developed, cone penetration testing may be accompanied by standard penetration tests, undisturbed soil sampling, and vane shear tests performed in accordance with USBR 7015, 7105, and 7115, respectively.

3. Applicable Documents

3.1 *USBR Procedures*:
USBR 1040 Calibrating Pressure Gauges
USBR 1045 Calibrating Force Transducers (Load Cells)
USBR 1050 Calibrating Pressure Transducers
USBR 3900 Standard Definitions of Terms and Symbols Relating to Soil Mechanics
USBR 7015 Performing Penetration Resistance Testing and Sampling of Soil
USBR 7105 Performing Undisturbed Soil Sampling by Mechanical Drilling Methods
USBR 7115 Performing Field Vane Shear Testing

3.2 *ASTM Standard*:
E 4 Load Verification of Testing Machines

3.3 *American National Standard*:
ANSI B46.1-1978 Surface Texture, Surface Roughness, Waviness and Lay, American Society of Mechanical Engineers

3.4 *USBR Document*:
Drillers's Safety Manual

4. Summary of Method

4.1 A penetrometer tip with a conical point having a 60-degree apex angle and a cone base area of 10 or 15 cm^2 is advanced through the soil at a constant rate of 1 to 2 cm/s depending on the design of the penetrometer tip. The force on the conical point (cone) required to penetrate the soil is measured by mechanical methods every 20 cm of penetration. Stress is calculated by dividing the measured force (total cone force) by the cone base area to obtain cone resistance, q_c.

4.2 If a friction sleeve is present on the penetrometer tips, the force exerted on the friction sleeve (located behind the cone) is measured, also by mechanical methods, every 20 cm of penetration. The force (total side friction) is measured when the midpoint of the friction sleeve is at a location which approximately coincides with the location of the cone at the previous cone reading. Stress is calculated by dividing the measured force by the surface area of the friction sleeve to determine friction sleeve resistance, f_s.

5. Significance and Use

5.1 This test provides a detailed record of cone resistance which is useful for evaluation of site stratigraphy, homogeneity and depth to firm layers, voids or cavities, and other discontinuities. The addition of a friction sleeve can provide an estimate of soil classification, and additional

correlations with engineering properties of soils. When properly performed at suitable sites, the test provides a rapid means for determining subsurface conditions.

6. Terminology

6.1 Definitions are in accordance with USBR 3900. Terms not included in USBR 3900 specific to this designation are:

6.1.1 *CPT.*–Abbreviation for cone penetration test.

6.1.2 *Cone.*–The conical point of a cone penetrometer on which the end bearing component of penetration resistance is developed. The cone has a 60-degree apex angle, a projected (horizontal plane) surface area or cone base area of 10 or 15 cm^2, and a cyclindrical extension behind the cone base (fig. 1).

6.1.3 *Cone Penetrometer.*–A penetrometer in which the leading end of the penetrometer tip is a conical point designed for penetrating soil and for measuring the end-bearing component of penetration resistance.

6.1.4 *Cone Resistance, q_c.*–The end-bearing component of penetration resistance. The resistance to penetration developed on the cone is equal to the vertical force applied to the cone divided by the cone base area.

6.1.5 *Cone Sounding.*–An entire series of penetration tests performed at one location when using a cone penetrometer.

6.1.6 *Continuous Cone Penetration Test.*–A penetration test, using a cone or friction cone penetrometer, in which the cone resistance is measured while all elements of the penetrometer tip have about the same rate of penetration. Typically associated with fixed cone penetrometer tips.

6.1.7 *Discontinuous Cone Penetration Test.*–A penetration test, using a cone or friction cone penetrometer, in which the cone resistance is measured while other elements of the penetrometer tip remain stationary. When a friction sleeve is incorporated into the penetrometer tip, the sum of the cone resistance and the friction sleeve resistance are measured when both the cone and friction sleeve are pushed, while the other elements of the penetrometer tip remain stationary. Typically associated with free cone penetrometer tips.

6.1.8 *Dutch Cone Test.*–Same as continuous cone pentration test.

6.1.9 *End Bearing Resistance.*–Same as cone resistance.

6.1.10 *Fixed Cone Penetrometer Tip.*–A cone or friction cone penetrometer tip which can only be subjected to micro relative displacement with respect to other elements of the penetrometer tip. Typically associated with electric penetrometers and continuous penetration testing.

6.1.11 *Free Cone Penetrometer Tip.*–A cone or friction cone penetrometer tip which is advanced while other elements of the penetrometer tip remain stationary. Typically associated with mechanical cone or friction-cone penetrometers and discontinuous penetration testing.

6.1.12 *Friction Cone Penetrometer.*–A cone penetrometer with the additional capability of measuring the friction component of penetration resistance.

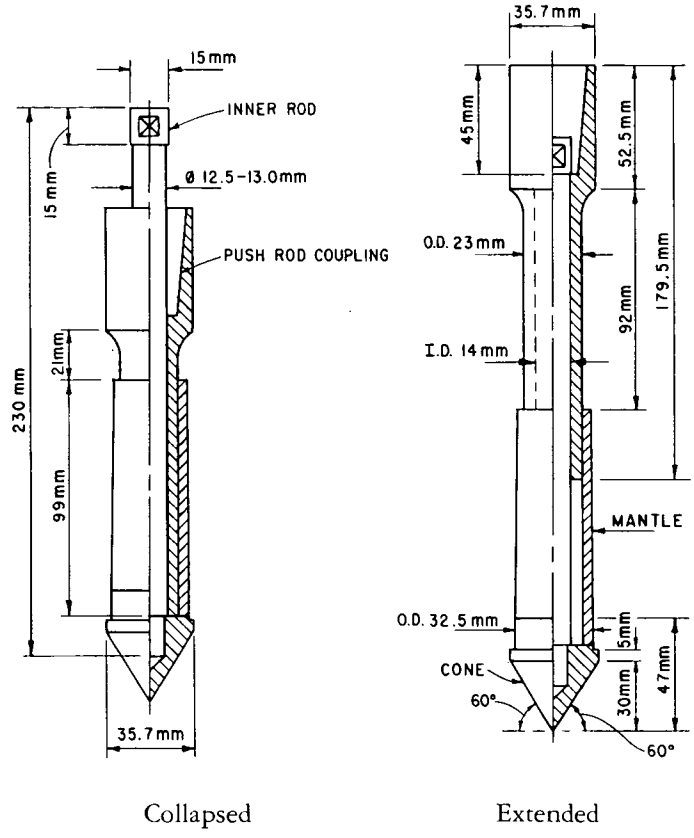

Figure 1. – Mechanical mantle cone penetrometer tip (Dutch mantle cone).

6.1.13 *Friction Ratio, R_f.*–The ratio of friction sleeve resistance, f_s, to cone resistance, q_c, measured at approximately the same depth, expressed as a percentage.

6.1.14 *Friction Reducer.*–A narrow local protuberance on the outside of the push rod surface, placed at a certain distance above the penetrometer tip, which is provided to reduce the total side friction on the push rods.

6.1.15 *Friction Sleeve.*–An isolated cylindrical sleeve section on a penetrometer tip upon which the friction component of penetration resistance develops. The friction sleeve has a surface area of either 150 cm^2 or 225 cm^2, depending on the diameter of the penetrometer tip.

6.1.16 *Friction Sleeve Resistance, f_s.*–The friction component of penetration resistance developed on a friction sleeve, equal to the vertical shear force applied to the friction sleeve divided by its surface area.

6.1.17 *Hydraulic Pneumatic Penetrometer.*–A cone or friction cone penetrometer which uses hydraulic or pneumatic devices built into the penetrometer tip to provide free cone penetration.

6.1.18 *Inner Rods.*–Solid rods which slide inside the push rods to activate the cone and friction sleeve (if present) on the mechanical cone penetrometer.

6.1.19 *Local Side Friction.*–Same as friction sleeve resistance.

6.1.20 *Mantle Cone Penetrometer.*–A mechanical cone penetrometer in which the cone is extended with

a sleeve of smaller diameter than the cone and a length longer than the diameter of the cone. This sleeve is called the mantle and its purpose is to minimize possible soil contamination of the sliding mechanism.

6.1.21 *Mechanical Cone Penetrometer.*–A cone or friction cone penetrometer that uses a set of inner rods to activate a telescoping penetrometer tip and to transmit the component(s) of penetration resistance to the surface for measurement (ASTM definition).

6.1.22 *Penetration Resistance Measuring System.*–A measuring system which provides the means for transmitting information from the penetrometer tip and displaying the data at the surface where it can be seen or recorded. Mechanical penetrometers use inner rods to transmit force and hydraulic load cells with pressure gauges for read out.

6.1.23 *Penetrometer.*–An apparatus consisting of a series of cylindrical rods with a terminal body (end section), called the penetrometer tip, and measuring devices for determination of the components of penetration resistance.

6.1.24 *Penetrometer Tip.*–The terminal body (end section) of the penetrometer, which contains the active elements that sense the components of penetration resistance.

6.1.25 *Push Rods.*–The thick-walled tubes or rods used to advance the penetrometer tip and to guide and shield the measuring system.

6.1.26 *Sleeve Friction and/or Resistance.*–Same as friction sleeve resistance.

6.1.27 *Total Force, Q_t.*–The force needed to push the penetrometer tip/push-rod assembly into the soil.

6.1.28 *Total Cone Force, Q_c.*– The total force acting on the cone.

6.1.29 *Total Side Friction, Q_{st}.*–The total force minus the total cone force.

7. Interferences

7.1 Refusal, deflection, or damage to the penetrometer may occur in coarse grained soil deposits with maximum particle sizes which approach or exceed the diameter of the cone.

7.2 Partially lithified and lithified deposits may cause refusal, deflection, or damage to the penetrometer.

7.3 Standard push rods can be damaged or broken under extreme loadings. The amount of force that push rods are able to sustain is a function of the unrestrained length of the rods and the weak links in the push rod-penetrometer tip string such as push rod joints and push rod-penetrometer tip connections. Generally, if total thrust exceeds 196 kN, standard push rods can be damaged.

7.4 When soils having high cone resistance are tested by mechanical penetrometers at appreciable depth, compression of inner rods may preclude accurate gauge readings (see app. X1).

8. Apparatus

8.1 *Mechanical Penetrometers*:

8.1.1 *Mechanical Mantle Cone Penetrometer.*–Figure 1 shows the design and action of a mechanical mantle cone penetrometer tip (Duch mantle cone). The penetrometer tip is a mantled free-cone penetrometer tip with the cone and mantle being advanced (extended) by means of force applied to the inner rods, while the outer push rods remain stationary. The total stroke of free-cone advance is about 71 mm. The penetrometer tip is collapsed by applying force to the outer push rods and the penetrometer tip is advanced to the next testing interval. A mantle of reduced diameter is attached above the cone to minimize possible soil contamination of the sliding mechanism.

8.1.2 *Mechanical Friction Mantle Cone Penetrometer.*–Figure 2 shows the design and action of a mechanical friction mantle cone penetrometer tip (Begemann friction-cone). The penetrometer tip is a mantled free-cone, friction sleeve penetrometer tip. Application of force to the inner rods first advances (extends) the cone and mantle for about one-half the stroke distance of 71 mm and then engages the friction sleeve for advancement of the cone, mantle, and friction sleeve an additional 35.5 mm as the outer push rods remain stationary. The total stroke of free-cone

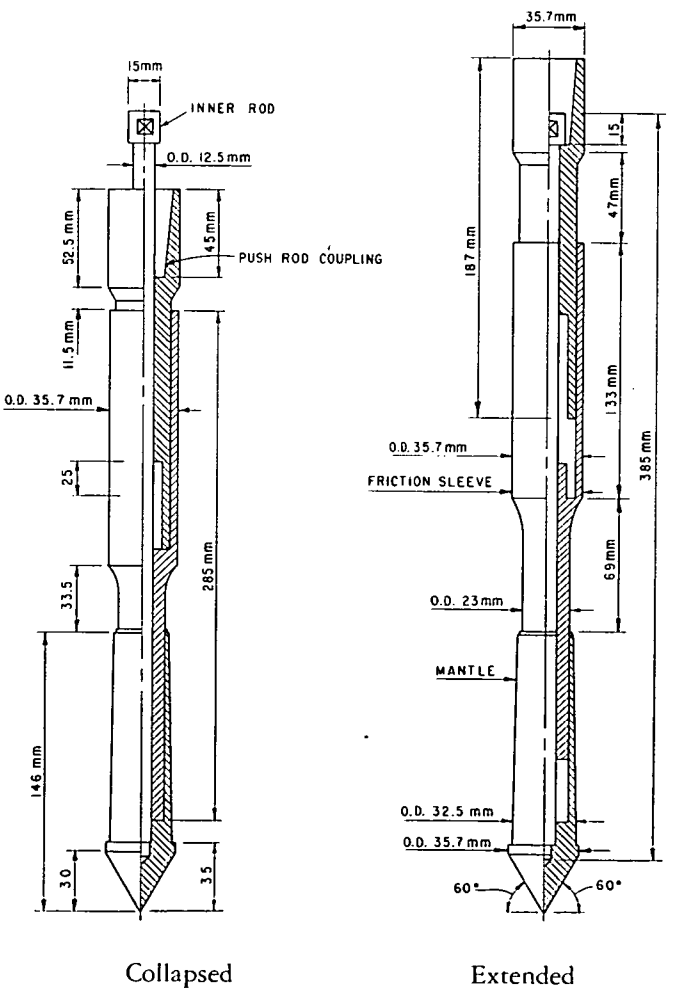

Figure 2. – Mechanical friction mantle cone penetrometer tip (Begemann friction cone).

advance is about 71 mm. The penetrometer tip then is collapsed by applying force to the push rods and the penetrometer tip is advanced to the next interval. A mantle of reduced diameter is attached above the cone to minimize possible soil contamination of sliding mechanisms.

8.1.3 *Cone.*–Nominal dimensions with manufacturing and operating tolerances for the cone are given in figure 3. The cone has a base area of 10 cm^2 with an apex angle of 60 degrees. In certain cases, it may be desireable to increase the cone diameter. Increasing the diameter requires more force and therefore higher resolution capability in soft soils. The standard increase is to a base diameter which provides a cone base area of 15 cm^2 while maintaining a 60-degree apex angle. Nominal dimensions with manufacturing and operating tolerences for 15-cm^2 cones are given on figure 3. The cone is made of steel of a type and hardness suitable to resist wear due to abrasion by soil.

8.1.4 *Friction Sleeve.*–The outside diameter of the manufactured friction sleeve and the operating diameter are equal to the diameter of the base of the cone with a tolerance of +0.35 mm and –0.00 mm. The surface area of the friction sleeve is 150 cm^2 ±2 percent. The surface of the friction sleeve is manufactured to a surface roughness of 0.5 μm ±50 percent in the direction of its longitudinal axis. No other part of the penetrometer tip will project outside the friction sleeve diameter. The friction sleeve is made from steel of a type and hardness to resist wear due to abrasion by soil. If the cone base diameter is increased, as provided for in subparagraph 8.1.3, the surface area of the friction sleeve should be adjusted proportionally to the cone base area. A 15-cm^2 cone should have a sleeve area of 225 cm^2.

8.2 *Measuring System.*–Hydraulic load cells of various capacities which can measure and record the forces on both inner and outer push rods should be used. Typical systems measure inner rod force transmitted through an oil-filled reservoir with readout on pressure gauges or electric pressure transducers. For pressure gauge readout systems, a two-gauge system with a low range gauge and an automatic cutoff to a high-pressure range gauge is recommended.

8.3 *Friction Reducer.*–If a friction reducer is used, it should be located at least 50 cm behind the base of the cone in a collapsed position. Friction reducers, which increase push rod outside diameter by approximately 25 percent, are typically used. Do not use friction reducers if total side friction, Q_{st}, on the push rods is to be used for friction pile capacity design.

8.4 *Push Rods.*–Steel rods are required having a cross sectional area adequate to sustain, without buckling, the thrust required to advance the penetrometer tip. The push rods must have an outside diameter equal to the diameter of the penetrometer tip for a length of at least 50 cm behind the base of the cone in a collapsed position. Standard 20-metric ton high tensile strength steel push rods are 36-mm outside diameter, 16-mm inside diameter, and have a mass per unit length of 6.65 kg/m. Push rods are supplied in 1-meter lengths. Each push rod must have the same, constant inside diameter. The push rods must be secured together to bear against each other at the joints and form a rigid-jointed string of push rods. The deviation of push rod alignment from a straight axis should be held to a minimum, especially in the push rods near the penetrometer tip to avoid excessive directional penetrometer drift. Generally, when a 1-meter long push rod is subjected to circular bending—resulting in 1 to 2 mm of center axis push rod shortening—the push rod should be discarded. This corresponds to a horizontal deflection of 2 to 3 cm at the center of bending.

When using inner rods inside of the push rods for mechanical penetrometer soundings, each set of push rods must be joined such that there is not an additional degree of freedom, as this increases chances of rod deflection and increases friction between the inner rods and the push rods. When using inner rods, the push rod joints should be visually inspected for protruding edges at the interior of the joint connections. Joint connections can be visually inspected by using a light source or by sliding an inner rod section along the joint to feel for protruding edges. It is desirable to utilize push guides to restrain the push rods from buckling. When measuring the total side friction with push rods, variations in outside diameter along the total length of the push rod string must not exceed ±1 mm.

8.5 *Inner Rods.*–Mechanical penetrometers require inner rods made of steel. Inner rods are nominally 15 mm in diameter, 1 meter in length, with a mass per unit length of 1.40 kg/m. The inner rod length must be equal to or slightly greater (0.0 to ≤ 0.1 mm) than the length of the push rods. The inner rod ends must be machined perpendicular to the rod axis. The outside diameter must be 15 mm +0.5 mm and –0.0 mm with a roughness less than 0.25 μm Ra (average roughness). (Refer to subpar. 3.3 for roughness.)

8.6 *Thrust Machine and Reaction.*–The thrust machine must provide a continuous stroke, preferably over a distance greater than 1 meter. The machine must advance the penetrometer tip and push rods at a smooth, constant rate (see subpar. 13.2) while the magnitude of thrust can fluctuate. The thrust machine must be anchored and/or ballasted so that it provides the necessary reaction for the penetrometer and does not move relative to the soil surface during thrust. These requirements preclude use of drilling rigs with a chain pulldown system and rigs whose reaction is transmitted through tires or other suspension systems that allow movement during penetration.

NOTE 2.–Cone penetration soundings usually require thrust capabilities ranging from 98 to 147 kN (10 to 15 metric tons). High mass ballasted vehicles can cause soil surface deformations which may affect penetrometer resistance(s) measured in near-surface layers. Anchored and/or ballasted vehicles also may induce changes in ground surface reference level. If these conditions are evident, they should be noted in reports.

9. Reagents and Materials

9.1 *Oil.*–For filling mechanical measuring systems. Consult hydraulic load cell manufacturer literature for recommended fluids.

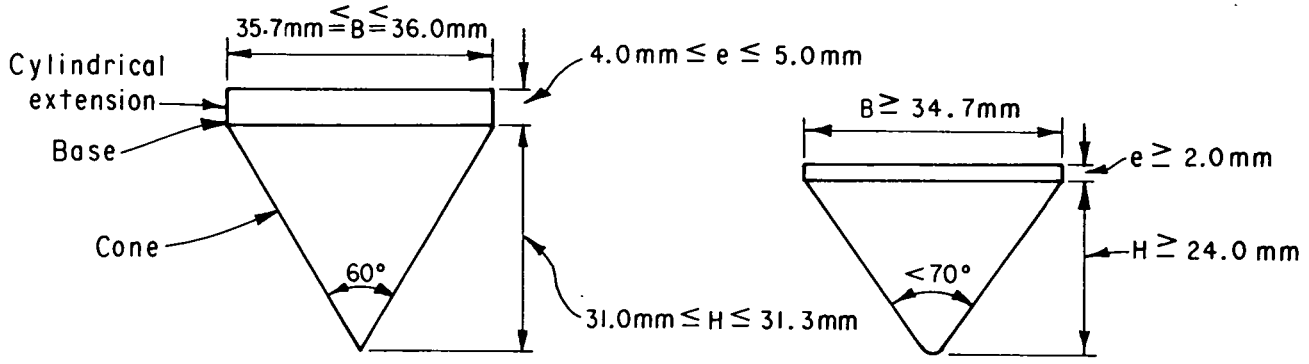

(a) Manufacturing tolerences of 10 cm² cones.

(b) Operating tolerences of 10 cm² cones.

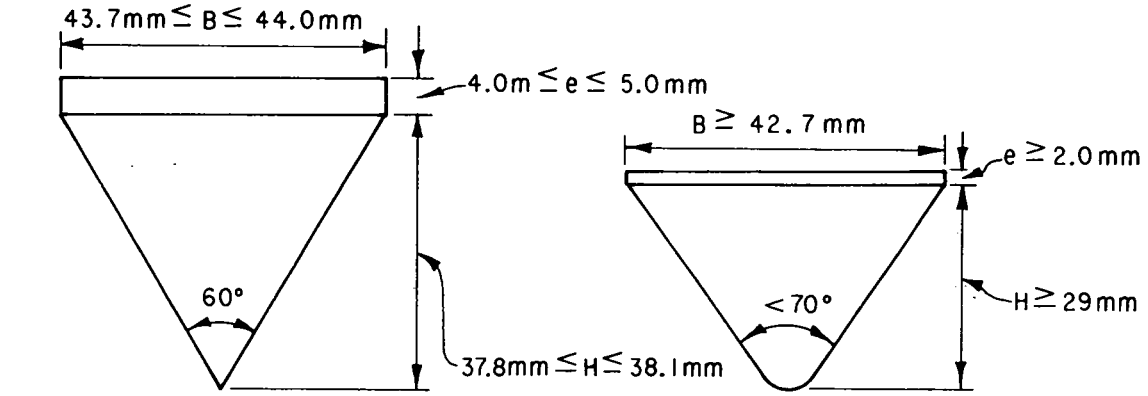

(c) Manufacturing tolerences of 15 cm² cones.

(d) Operating tolerences of 15 cm² cones.

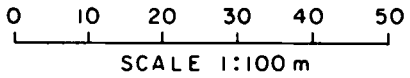

CONE BASE AREA cm²	NOMINAL			TOLERANCE MANUFACTURED (OPERATIONS)		
	BASE DIAMETER B mm	CONE HEIGHT H mm	EXTENSION e mm	B mm	H mm	e mm
10	35.7	31.0	5.0	+0.3 −0.0 (≥34.7)	+0.3 −0.0 (≥24.0)	+0.0 −1.0 (≥ 2.0)
15	43.7	37.8	5.0	+0.3 −0.0 (≥42.7)	+0.3 −0.0 (≥29.0)	+0.0 −1.0 (≥2.0)

Figure 3. – Cone penetrometer tips.

10. Precautions

10.1 *Safety Precautions.*–Performance of the test usually involves use of a drill rig; therefore, safety requirements as outlined in the document cited in subparagraph 3.4, or in other applicable safety standards should be observed.

10.2 *Technical Precautions*:

10.2.1 Use of penetrometer tip components that do not meet required tolerances or show visible signs of

nonsymmetric wear can result in erroneous penetration resistance data.

10.2.2 The application of thrust in excess of rated capacity of the equipment can result in damage to equipment (see par. 7).

10.2.3 A cone sounding must not be performed any closer than 25 borehole diameters from any existing unbackfilled or uncased bore hole.

10.2.4 When performing cone penetration testing in prebored holes, an estimate of the depth below the prebored depth—which is disturbed by drilling—should be made, and penetration resistance data obtained in this zone should be noted. Usually, this depth of disturbance is assumed to be equal to at least three borehole diameters.

10.2.5 Significant bending of the push rods can influence penetration resistance data. The use of a tubular rod guide is recommended at the base of the thrust machine and also in prebored holes to help prevent push rod bending.

10.2.6 Push rods not meeting requirements of subparagraph 8.4 may result in excessive directional penetrometer drift and possibly unreliable penetration resistance data.

10.2.7 Passing through or alongside obstructions may deflect the penetrometer and induce directional drift. Note any indications of encountering such obstructions, and be alert for possible subsequent improper penetrometer tip operation.

10.2.8 If the proper rate of advance of the penetrometer is not maintained for the entire stroke through the measurement interval, penetration resistance data may be erroneous.

10.2.9 Differences in penetrometer tip shape and method of advance (for example, between fixed-cone electric and free-cone mechanical operation) may result in significant differences in one or both of the components of penetration resistance.

10.2.10 Friction between the inner rods and the push rods can result in erroneous penetration resistance data. Rod strings should be checked for smooth inner rod travel, and there should not be any protruding edges at the connections between push rods.

10.2.11 Soil ingress into the sliding mechanisms of mechanical penetrometer tips can result in erroneous penetration resistance data. The telescoping operation of the mechanical penetrometer tip must be checked and components cleaned before use to ensure smooth operation. The sliding mechanism also must be checked after each sounding for freedom of operation.

10.2.12 If the oil level in the hydraulic load cell drops excessively, the measurement system will not react properly during penetrometer tip advancement. This inhibits the operators' ability to obtain load cell readings. The oil level is to be checked periodically and maintained at the correct level.

10.2.13 When materials having high cone resistance are tested at appreciable depths, elastic compression of inner rods may preclude accurate pressure gauge readings. Sections of inner rod are added to maintain inner rod contact with the hydraulic load cell plunger and, therefore, maintain ability to obtain pressure gauge readings during penetrometer advance. Appendix X1 provides guidelines for conditions when inner rod lengths are to be added. This appendix is applicable to standard steel inner rods and mechanical penetrometers specified in subparagraphs 8.1.1, 8.1.2, and 8.5.

11. Calibration and Standardization

11.1 Mechanical penetrometers which utilize Bourdon tube pressure gauges must have individual pressure gauges calibrated prior to attachment to the hydraulic load cell system. Pressure gauges should be calibrated in accordance with USBR 1040.

11.2 Mechanical penetrometers which utilize electronic pressure transducers must have transducers calibrated prior to attachment to the hydraulic load cell system. Transducers should be calibrated in accordance with USBR 1050.

11.3 The assembled hydraulic load cell system must be calibrated in a universal testing machine and loaded to 80 percent of FSO (full scale output). The testing machine must have been calibrated, within the last year, in accordance with ASTM E 4. The calibration should result in non-linearity $\leq$ 1 percent of FSO, and calibration error (measured versus actual value) $\leq$ 10 percent. Examples of calibration of hydraulic load cell systems which use Bourdon pressure gauges are given in annex A1. This calibration is to be performed at the following intervals: after every 20 soundings; after parts replacement in the hydraulic load cell system; and after replacement of Bourdon gauges or pressure transducers.

11.4 *Zero Load Drift.*–The hydraulic load cell system is typically assembled with an internal fluid pressure of approximately 3 to 4 kgf/cm^2. This zero load pressure (gauge zero) is subtracted from gauge readings taken during testing for calculation of cone and friction sleeve resistance. Temperature fluctuations cause a rise or fall in internal pressures with expansion or contraction of the closed system. Leakage in the system results in a drop in pressure and the gauge-zero reading may drop to zero.

12. Conditioning

12.1 Not applicable, special conditioning requirements are not needed for this procedure.

13. Procedure

13.1 *General Requirements*:

13.1.1 Position the thrust machine over the location of the sounding, and lower leveling jacks to raise the machine mass off the suspension system. Set the hydraulic rams of the penetrometer thrust system as near vertical as possible. The maximum acceptable deviation of thrust direction is 2 degrees from vertical. The axis of the push rods must coincide with the thrust direction.

13.1.2 Set the hydraulic ram feed rate to advance the penetrometer at a rate of 2.0±0.5 cm/s for mechanical

cone penetrometers. The feed rate for mechanical friction cone penetrometers is 1.0±0.5 cm/s to allow more time to obtain the cone load and sleeve load reading. This rate must be maintained during the entire stroke, even if readings are only taken at intervals.

13.1.3 Take readings at intervals of 20 cm or less.

13.1.4 Measure the depth at which readings were taken with an accuracy of ±10 cm from the ground surface.

13.1.5 Check push rods and/or inner rods for straightness as required in subparagraph 8.4. For mechanical penetrometers, lightly lubricate inner rods to reduce friction. Push rods are assembled and tightened by hand; but care must be taken to ensure that the shoulders are tightly butted to prevent damage to the push rods. Add a friction reducer to the string of push rods, usually the first push rod behind the penetrometer tip.

13.1.6 Inspect penetrometer tips before and after soundings for damage, soil ingress, and wear. Dismantle mechanical penetrometer tips after each sounding to clean and lubricate as required. If damage is found after a sounding, this information must be noted and recorded on the sounding data record.

13.2 *Mechanical Cone Penetrometer Procedures*:

13.2.1 Record all pertinent data on the "Mechanical Cone Penetrometer Data Sheet 1" as shown on figure 4.

13.2.2 Mechanical cone penetrometers typically use hydraulic load cells which have two or more pressure gauges. Bypass systems and automatic shutoff valves transfer pressure from one gauge to another and protect low range gauges. The automatic shutoff valve protecting the low range gauge does not react instantaneously and will begin to restrict the pressure before it shuts off completely as pressure is bypassed to the high range gauge at the same time. The bypass pressure or "gauge break" pressure from the low to high range gauge must be determined during load cell calibration. For the reasons given above, readings on the low range gauge above the gauge break pressure should not be obtained as they are likely to be inaccurate. The gauge break pressure(s) should be recorded on the mechanical cone penetrometer data sheet (fig. 4). Record pressure gauge-zero readings, gauge break pressure, and the cone and friction sleeve factors (CF and SF) on the data sheet. The gauge break pressure, and cone (CF) and friction sleeve (SF) factors are obtained during calibrations as explained in annex A1.

13.2.3 Mechanical Cone Penetrometer—Discontinuous Sounding Procedure:

13.2.3.1 Advance the penetrometer tip to the required test depth by applying sufficient thrust on the push rods. Record starting depth.

13.2.3.2 Apply sufficient thrust on the inner rods to extend the penetrometer tip. Obtain and record the cone pressure gauge reading after more than 25 mm of relative movement of the inner rods with respect to the top of stationary push rods, as the penetrometer tip is extended. Full extension is about 71 mm.

13.2.3.3 Apply sufficient thrust to collapse the extended tip and advance the push rods an additional 20 cm.

13.2.3.4 By continually repeating the two-step process given in 13.2.3.2 and 13.2.3.3, obtain cone resistance data at 20-cm intervals.

13.2.3.5 Begin to withdraw and extract the penetrometer tip as soon as possible after attaining complete sounding depth.

13.2.3.6 Upon complete withdrawal of the penetrometer, inspect the penetrometer tip for proper operation.

13.2.4 Mechanical Cone Penetrometer—Continuous Sounding Procedure.–For continuous soundings, a continuous sounding ring plate is attached to the bottom of the load cell and a 75-mm extension is added to the inner rods. These modifications allow for continuous thrust on the push rods while the penetrometer tip remains extended with pressure gauge readings obtained for the inner rods only. Record the cone pressure gauge reading and depth at a minimum of 20-cm intervals.

NOTE 3.–Continuous testing with a mechanical cone penetrometer tip is not recommended where a high degree of accuracy is required, as movement of the inner rods relative to the push rods changes with depth, increasing the error due to sliding friction. Elastic compression of the inner rods and deflection of the hydraulic load cell diaphragm is the cause for differential movement of the inner rods in relation to the push rods. For each 1-m of soil tested, check that the inner rods are still free to move relative to the push rods.

13.2.5 Mechanical Friction Mantle Cone Penetrometer — Discontinuous Sounding Procedure:

13.2.5.1 Advance the penetrometer tip to the required test depth by applying sufficient thrust on the push rods. Record the depth.

13.2.5.2 Apply sufficient thrust on the inner rods to extend the penetrometer tip to full extension of about 71 mm. For each increment of sounding, two pressure gauge readings are obtained (fig. 4). The cone pressure gauge reading (C, subpar. 14.5) is obtained during the initial phase of the extension (about 35 mm). When the mantled cone engages and pulls down the friction sleeve, obtain a cone plus friction sleeve pressure gauge reading ($C + S$, subpar. 14.5). Obtain the cone plus friction sleeve pressure gauge reading as soon as possible after the temporary pressure jump shown on figure 5. Unless using a continuous X–Y recorder, the operator should not record cone plus friction sleeve pressure gauge readings if well defined data are not available or if the cone resistance is suspected of changing abruptly or erratically.

NOTE 4.–In layered deposits, cone resistance may fluctuate as it "senses" softer or harder layers ahead of the cone. In these cases, the ratio of cone resistance to friction sleeve resistance (friction ratio) will be erratic. It is important to note these fluctuations by writing such observations in the comments column of the data sheet.

13.2.5.3 Apply sufficient thrust to collapse the extended penetrometer tip and advance the push rods an additional 20 cm.

7-2362 (9-86)
Bureau of Reclamation

MECHANICAL CONE PENETROMETER DATA SHEET 1

Designation USBR 7020.89

PROJECT Example FEATURE Example DATE

HOLE NO. DHC-1 LOCATION Sta. 1+00 100ft. D/S GROUND ELEV. 6750.5 WATER ELEV. not measured

CONE NO. 285 HIGH GAUGE NO. 2.64.521.55 LOW GAUGE NO. 2.43.512.36

OPERATOR RECORDER CONE TYPE Friction Mantle

LOW GAUGE ZERO (Z_1) = 2.0

HIGH GAUGE ZERO (Z_2) = 4.0

GAUGE BREAK 85.0

GAUGE UNITS: [X] kgf/cm² [ ] MPa [ ] ton/ft²

CALIBRATION FACTORS: CF = 2.0 SF = 7.5

COMMENTS: Predrilled to 3.8 m with 4" Auger; backfilled with sand.; Gravel 0.0 to 3.5 m; Weather - Hot and sunny

DEPTH	CONE READING (C)	CONE + SLEEVE READING (C+S)	1/ CONE RES. q_c = (C-Z) x CF	1/2/ FRICTION SLEEVE RES. f_s=[(C+S)-Z) -(C-Z)]/SF	FRICTION RATIO R_f (%) = $\frac{f_s}{q_c} \times 100$	
4.0	70.	— .	136	1.87	1.4	Start of data recording
4.2	68.	82.	132	0.53	0.4	0.53= $\frac{(64-2)-(60-2)}{7.5}$
4.4	60.	64.	116	1.20	1.0	
4.6	36.	45.	68	0.53	0.8	Add rod
4.8	42.	46.	80	2.00	2.5	
5.0	28.	43.	52	1.47	2.8	
5.2	21.	32.	38	1.87	4.9	
5.4	27.	41.	50	1.33	2.7	
5.6	25.	35.	46	1.47	3.2	Add rod
5.8	35.	46.	66	1.20	1.8	
6.0	16.	25.	28	1.60	5.7	
6.2	5.	17.	6	0.4	6.7	
6.4	6.	9.	8	0.4	5.0	
6.6	2.	5.	0	0.4	—	Add rod R_f = 0.4/0
6.8	12.	15.	20	0.13	0.7	
7.0	8.	9.	12	0.67	5.6	
7.2	7.	12.	10	0.67	6.7	
7.4	22.	27.	40	1.33	3.3	
7.6	50.	60.	96	1.33	1.4	Add rod
7.8	110.	120.	212	5.73	2.7	5.73= $\frac{(100-4)-(55-2)}{7.5}$
8.0	55.	100.	106	5.33	5.0	(C) on low gauge, (C+S) on high
8.2	180.	220.	352	10.67	3.0	10.67= $\frac{(190-4)-(110-4)}{7.5}$
8.4	110.	190.	212	2.67	1.3	Crunching
8.6	140.	160.	272	5.33	2.0	Add rod ; crunching
8.8	140.	180.	272	—	—	Terminate sounding

1/ Z, use Z_1 or Z_2 depending on gauge used for reading

2/ ↗ indicates f_s for depth (n) calculated from (C) and (C+S) at depth (n + 0.2)m

Sheet 1 of 1

Figure 4. – Mechanical cone penetrometer data sheet 1 — example.

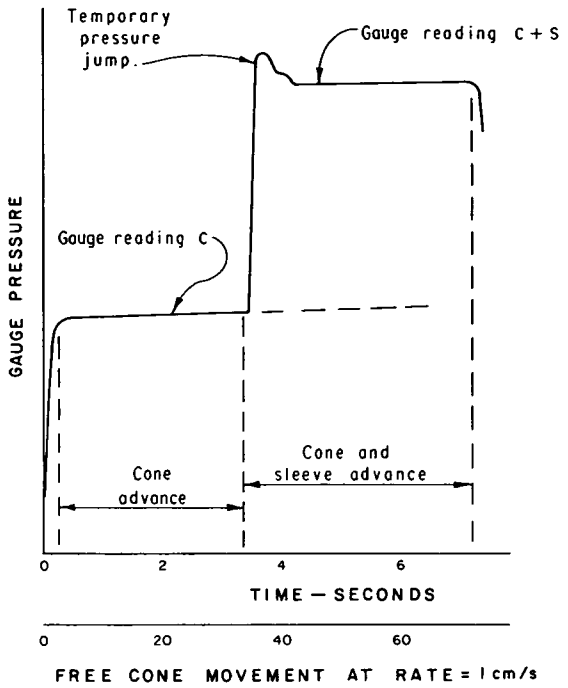

Figure 5. – Variation in gauge pressure during discontinuous mechanical friction — mantle cone penetration through a homogeneous deposit.

13.2.5.4 By continually repeating the two-step process given in subparagraphs 13.2.5.2 and 13.2.5.3, obtain cone and friction sleeve pressure gauge readings at 20-cm intervals.

13.2.5.5 Begin to withdraw and extract the penetrometer tip as soon as possible after attaining complete sounding depth.

13.2.5.6 Upon complete withdrawal of the penetrometer, inspect the penetrometer tip for proper operation.

13.3 *Penetrometer Operation and Data Interpretation — Guidelines*:

13.3.1 When performing mechanical penetrometer soundings, it is often desirable to note the magnitude of total force, Q_t, required to advance the push rods and penetrometer tip. Intermittently record pressure gauge readings of total thrust in the comments column of the data sheets.

13.3.2 Note and record the depths at which rods are added.

13.3.3 Directional Drift of Penetrometer Tip:

13.3.3.1 For penetration depths exceeding about 12 meters, the penetrometer tip will drift directionally from vertical alignment. Large deviations in inclination can create nonuniform loading and result in unreliable penetration resistance data. Reduce drift by accurately setting thrust alignment and using push rods which meet tolerances given in subparagraph 8.4.

13.3.3.2 Passing through or along side obstructions such as boulders, cobbles, coarse gravel, soil concretions, thin rock layers, or inclined dense layers will deflect the penetrometer tip and induce drifting. Note and record any indication of encountering such obstructions, and be alert for possible subsequent improper penetrometer tip operations as a sign of serious directional drifting.

13.3.3.3 Penetrometer inclination cannot be easily monitored on mechanical penetrometers. Inclination can cause increases in sliding friction between the inner rods and push rods. The magnitude of friction can sometimes be measured in homogeneous soils by obtaining the differences in resistance using continuous and discontinuous sounding methods.

13.3.4 If *obstructions* are encountered and normal advance of the sounding is stopped to bore through the obstructions, obtain further penetration resistance data only after the penetrometer tip has passed through the estimated zone of disturbance due to drilling. As an alternative, readings may be continued without first making the additional penetration and the disturbed zone evaluated from these data. Note and record the depth and thickness of obstructions and disturbed zones in areas where obstructions are drilled through.

13.3.5 As data are recorded, it is important to note *unusual occurrences* in testing. When penetrating gravels, it is important to note "crunching" sounds which may occur when particle size and percentage of coarse particles begin to influence penetration. In many cases, it is important to note the magnitude of thrust required to advance the penetrometer to evaluate when thrust capacity may be exceeded.

14. Calculations

14.1 *Cone Resistance, q_c*:

$$q_c = \frac{Q_c}{A_c} \quad (1)$$

where:

q_c = cone resistance, ton/ft², kgf/cm², or MPa
Q_c = force on cone, ton, kgf, or kN
A_c = cone base area, typically 10 cm², ft², cm²

14.2 *Friction Sleeve Resistance, f_s*:

$$f_s = \frac{Q_s}{A_s} \quad (2)$$

where:

f_s = friction sleeve resistance, ton/ft², kgf/cm², or kPa
Q_s = force on friction sleeve, ton, kgf, or kN
A_s = friction sleeve area, typically 150 cm², ft², or cm²

14.3 *Friction Ratio*:

$$R_f = 100\ \frac{f_s}{q_c} \quad (3)$$

where:

R_f = friction ratio, %
f_s = friction sleeve resistance, ton/ft², kgf/cm², or kPa
q_c = cone resistance, ton/ft², kgf/cm², or MPa
100 = convert from decimal to percent

Determination of the friction ratio requires obtaining a cone resistance and friction sleeve resistance at the same point in the soil mass. Typically, a previous cone resistance reading at friction sleeve midpoint depth is used for the calculations. The calculated value of friction sleeve resistance is divided by the tip resistance obtained at approximately 20 cm above the location where friction sleeve resistance is calculated (fig. 4).

NOTE 5.–In some cases, if readings are compared at the same point in a soil mass which has alternating layers of soft and hard materials, nonexistent layers will be falsely observed in the data because cone resistance is sensed, to varying degrees, ahead of the cone. To compensate, the sensing distance ahead of the cone can be varied such that the cone resistance is actually recorded above or below friction sleeve midheight.

NOTE 6.–The friction sleeve resistance and friction ratio obtained from the mechanical friction cone penetrometer will differ considerably from values obtained from electric friction cone penetrometers. As shown on figure 2, the mechanical friction cone penetrometer has a "shoulder" at the base of the friction sleeve which can carry normal forces. In coarse-grained soil, the difference in sleeve friction is more pronounced than in fine-grained soil. When using soil classification charts which use R_f and q_c, it is important to use charts which are based on correlations for the type of penetrometer tip being used.

14.4 *Mechanical Cone Penetrometer Using Hydraulic Load Cells Equipped With Bourdon Tube Pressure Gauges*:

$$q_c = \mathrm{CF}\,(C - Z) \qquad (4)$$

where:

q_c = cone resistance, ton/ft², kgf/cm², or MPa
CF = cone factor, dimensionless (refer to annex A1)
C = cone gauge reading, ton/ft², kgf/cm², or MPa
Z = gauge-zero, equal to gauge reading at zero load, ton/ft², kgf/cm², or MPa (refer to annex A1)

14.5 *Mechanical Friction Cone Penetrometer Using Hydraulic Load Cells Equipped With Bourdon Tube Pressure Gauges*:

14.5.1 *Cone Resistance.*–Same as subparagraph 14.4.

14.5.2 *Friction Sleeve Resistance.*–When cone and cone plus friction sleeve gauge readings are obtained on the same gauge:

$$f_s = \frac{(C+S) - C}{\mathrm{SF}} \qquad (5)$$

where:

f_s = friction sleeve resistance, ton/ft², kgf/cm², or kPa
$C+S$ = cone plus friction sleeve gauge reading, ton/ft², kgf/cm², or kPa
C = cone gauge reading, ton/ft², kgf/cm² or kPa
SF = friction sleeve factor, dimensionless (refer to annex A1)

14.5.3 *Friction Sleeve Resistance.*–When cone and cone plus friction sleeve gauge readings are obtained on different pressure gauges:

$$f_s = \frac{(C+S-Z_1) - (C-Z_2)}{\mathrm{SF}} \qquad (6)$$

where:

f_s = friction sleeve resistance, ton/ft², kgf/cm², or kPa
$C+S$ = cone plus friction sleeve gauge reading, ton/ft², kgf/cm², or kPa
C = cone gauge reading, ton/ft², kgf/cm², or kPa
Z_1 = gauge zero reading for gauge that $C+S$ was obtained, ton/ft², kgf/cm², or kPa
Z_2 = gauge zero reading for gauge that C was obtained, ton/ft², kgf/cm², or kPa
SF = friction sleeve factor, dimensionless (refer to annex A1)

The friction sleeve resistance is actually obtained at approximately 20 cm above the depth at which the pressure gauge readings are obtained. Transfer the calculated friction sleeve resistance (subpars. 14.5.2 or 14.5.3) up to the previous depth interval on the data sheet. An example of mechanical friction cone calculations showing this is given on figure 4.

14.6 *Inner Rod Corrections.*–Mechanical cone penetrometer soundings which encounter deposits with low cone resistances ($q_c < 30$ kgf/cm² at depths greater than 20 meters) should have resistance values corrected for the mass of the inner rods.

$$q_c = \mathrm{CF}\,(C - Z) + 0.14\,N \qquad (7)$$

where:

q_c = cone resistance, kgf/cm²
CF = cone factor, dimensionless (refer to annex A1)
C = cone pressure gauge reading, kgf/cm²
Z = gauge-zero reading equal to gauge reading at zero load, kgf/cm²
0.14 = net increase in cone resistance due to mass of 1 inner rod, equals 1.4 kgf/rod divided by 10 cm², kgf/cm². (This factor can be converted to use units of tons/ft² or MPa.)
N = number of inner rods

15. Report

15.1 *General*:

Each sounding log should provide as a minimum:

Operator name	Sounding No.
Project information	Sounding location
Feature notes	Water surface elevation
Sounding date	(if avilable)

Reports should contain information concerning:

Equipment used	Tabular graph data
Procedures followed	Graphs
Calibation information	

The report should contain a test that discusses items required in subparagraphs 15.2 and 15.3

Each sounding should be documented with:

A geologic log
Sounding plot
Accompanying tabular output

The comments should contain notes on equipment and procedures — particular to the individual sounding.

15.2 *Equipment.*–The report should include notes concerning:

- Penetrometer manufacturer
- Types of penetrometer tips used
- Penetrometer details such as friction sleeve end areas
- Serial numbers of penetrometer tips
- Pressure gauges
- Type of thrust machine
- Method used to provide reaction force — with notes as to possible surface deformations
- Type of friction reduction system (if any)
- Method of penetrometer tip advancement (free cone, discontinuous, continuous, fixed cone, etc.)
- Method of recording data
- Condition of pushrods and penetrometer tip after withdrawal
- Any special difficulties or other observations concerning performance of the equipment

15.3 *Calibration Certifications.*–Calibrations of Bureau-owned equipment should be retained in offices and maintained as outlined in paragraph 11. Soundings performed under contract by others require submittal of calibration records (in conformance with requirements given in para. 11) prior to performance of the contract, for review by the contracting officer. After performance of the contract, the additional field calibration documents (as outlined in para. 11) will be submitted with the report. Field calibration data consisting of pre- and post sounding baseline values are to be reported with each individual sounding.

15.4 *Graphs.*–Every report of a cone or friction cone sounding is to include a cone resistance plot, q_c (ton/ft^2, kgf/cm^2, or MPa) with depth below ground surface (ft or m). (See fig. 6 for an example plot.) Friction cone soundings will include the friction sleeve resistance, f_s (ton/ft^2, kgf/cm^2, kPa), and friction ratio, R_f (%), on the same plot. The plots should indicate locations of push rod changes and other interruptions as outlined in subparagraphs 13.3.2 through 13.3.5. If it is incapable to show locations of interruptions on the report plots, provide a secondary plot or notes of the occurrences of interruptions. As a minimum, the plot should provide information as outlined in subparagraph 15.1. For uniform presentation of data, the vertical axis (ordinate) should display depth and the horizontal axis (abscissa) should display the test values. An example of a completed geologic log is shown on figure 7.

15.5 *Report Requirements for Specifications.*–Each sounding to be displayed is to consist of two parts. First, a geologic log of the drill hole that contains report requirements given in subparagraphs 15.1 and 15.2 and any special interpretations or additional data obtained in conjunction with the sounding; second, plots meeting requirements given in subparagraph 15.4.

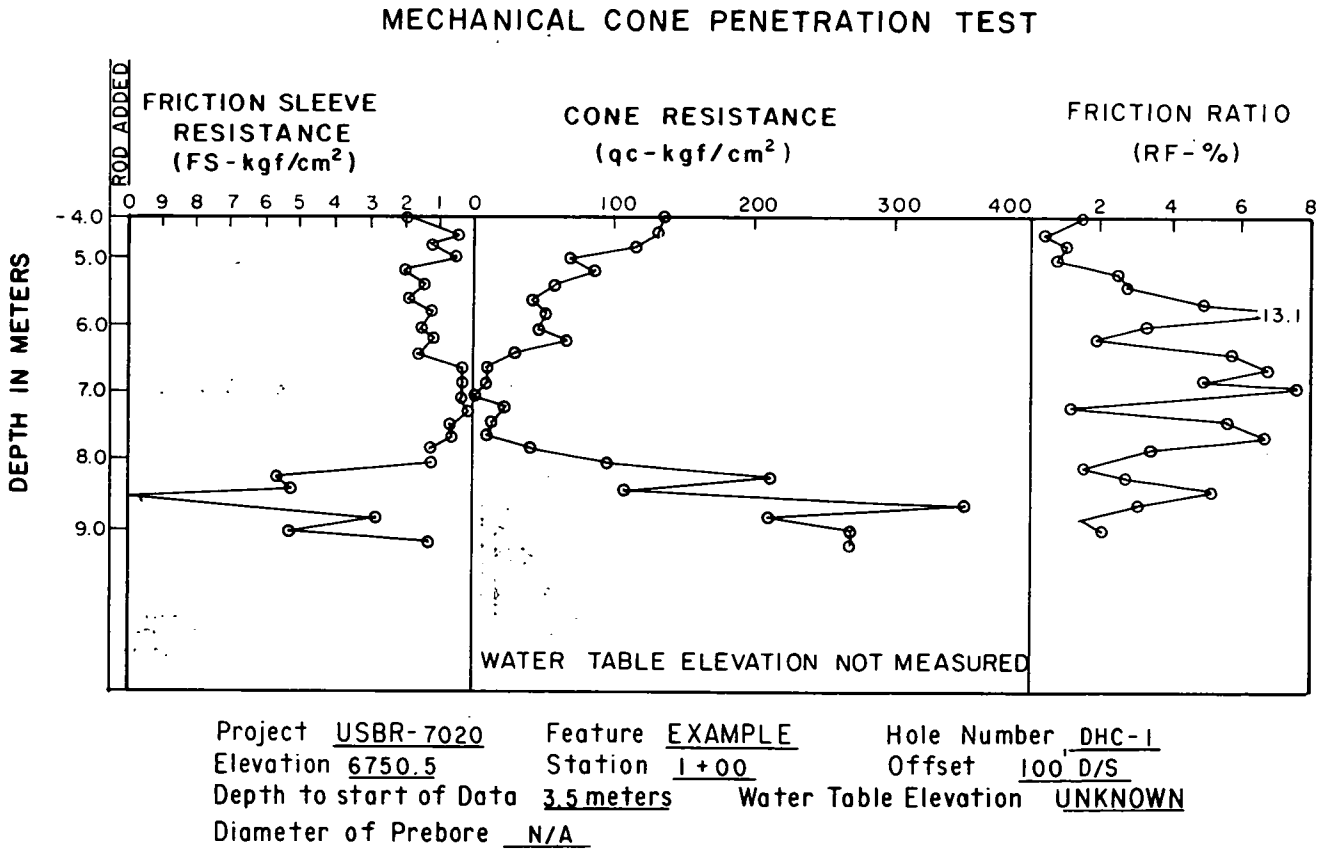

Figure 6. – Mechanical cone penetration test — example.

7-1337 (6-74) Bureau of Reclamation

GEOLOGIC LOG OF DRILL HOLE

SHEET 1 OF 2

FEATURE: Jackson Lake Dam — PROJECT: Minidoka — STATE: Wyoming

HOLE NO.: DHC-1 — LOCATION: Downstream C. Dam Sta. 16+45 — COORDS. N. 1,163,955 E. 366,715 — GROUND ELEV.: 6741.0 — DIP (ANGLE FROM HORIZ.): 90

BEGUN: 6-16-76 — FINISHED: 6-22-76 — DEPTH OF OVERBURDEN: -- — TOTAL DEPTH: 152.8 — BEARING: --

DEPTH AND ELEV. OF WATER LEVEL AND DATE MEASURED: Not measured — LOGGED BY: A. C. Lockhart — LOG REVIEWED BY: R. H. Carter

NOTES ON WATER LOSSES AND LEVELS, CASING, CEMENTING, CAVING, AND OTHER DRILLING CONDITIONS

Drill Equipment
CME 75

Driller
Robert Hatcher

Drill Setup
Drill set up on original ground

Drilling Methods
0.0'-110.0': Dutch penetrometer equipment
0.0'-80.0':** Drilled with 2-15/16" rock bit with clear water and set 70' of Nx casing.
80.0'-152.0': Dutch cone penetrometer equipment
80.0'-130.0':** 2-15/16" rock bit with revert drilling mud.
130.0'-152.8': Dutch cone penetrometer equipment, stop by rock.

Drilling conditions
0.0'-18.0' Rough and slow.
18.0'-86.0': Smooth and fast, hole squeezing at 20.0'.
86.0'-130.0': Smooth and fast, hole squeezing at 95.0'-130.0'.
130.0'-152.8': Smooth penetration equipment advanced easily.

Casing Record

Date	Depth Hole	Depth Casing
6/18	100.0'	20.0'
6/21	100.0'	70.0'
6/22	152.8'	70.0'

TYPE AND SIZE OF HOLE: RB; DC; WS; RB

CORE RECOVERY (%): WS

PERCOLATION TESTS: No percolation tests taken

DEPTH (FEET) FROM (P, Cs, or Cm)	DEPTH (FEET) TO	LOSS (G.P.M.)	PRESSURE (P.S.I.)	LENGTH OF TEST (MIN.)

ELEVATION (FEET)	DEPTH (FEET)
6741.0	
6737.7	3.3
6723.0	18.0
6665.0	76.0

GRAPHIC LOG

SAMPLES FOR TESTING

CLASSIFICATION AND PHYSICAL CONDITION

0.0'-3.3': Silt, Sand and Cobbles.* Material based on driller comments and drill cutting.

3.3'-18.0': Recent Gravels*: Material based on driller's comments and drill cuttings. Estimated material size as 2" to 4".

18.0'-152.8': Older Fluviolacustrine Deposits

18.0' - 76.0' : Sandy Silt material is based on data from Drill Hole 8, and drill cuttings.

76.0'-152.8': Clay. Material based on data from Drill Hole 8, and drill cuttings.

EXPLANATION

RB = Rock bit
WS = Wash sample
DC = Dutch Cone Penetrometer Equipment

** 0.0' - 80.0' : Hole reamed with rock bit after penetrometer could penetrate no deeper.

80.0' - 130.0' : Same as above.

CORE LOSS
CORE RECOVERY

Type of hole . . . . . D = Diamond, H = Hoystellite, S = Shot, C = Churn
Hole sealed . . . . . P = Packer, Cm = Cemented, Cs = Bottom of casing

Approx. size of hole (X-series)	Ex = 1-1/2",	Ax = 1-7/8",	Bx = 2-3/8",	Nx = 3"
Approx. size of core (X-series)	Ex = 7/8",	Ax = 1-1/8",	Bx = 1-5/8",	Nx = 2-1/8"
Outside dia. of casing (X-series)	Ex = 1-13/16",	Ax = 2-1/4",	Bx = 2-7/8",	Nx = 3-1/2"
Inside dia. of casing (X-series)	Ex = 1-1/2",	Ax = 1-29/32",	Bx = 2-3/8",	Nx = 3"

Figure 7. – Geologic log of drill hole (sheet 1 of 2).

7-1337 (6-74) Bureau of Reclamation

GEOLOGIC LOG OF DRILL HOLE

SHEET 2 OF 2

FEATURE: Jackson Lake Dam — PROJECT: Minidoka — STATE: Wyoming

HOLE NO.: DHC-1 — LOCATION: 255' Downstream C Dam Station 16+45 — GROUND ELEV.: 6741.0' — DIP (ANGLE FROM HORIZ.): 90°

BEGUN: 6-16-76 — FINISHED: 6-22-76 — DEPTH OF OVERBURDEN: -- — TOTAL DEPTH: 152.8' — BEARING: --

COORDS. N 1,169,955 E 366,715

DEPTH AND ELEV. OF WATER LEVEL AND DATE MEASURED: Not measured — LOGGED BY: A. C. Lockhart — LOG REVIEWED BY: B. H. Carter

NOTES ON WATER LOSSES AND LEVELS, CASING, CEMENTING, CAVING, AND OTHER DRILLING CONDITIONS

Water Return

Interval	Return
0-80.0'	0

Mud Return

Interval	Return
20.0'-80.0'	0
80.0'-130.0'	60

Water Level After Drilling: Not measured

Hole Completion: Pulled 70.0' of Nx casing and back-filled drill hold.

Purpose of Hole: Dutch cone penetrometer tests.

TYPE AND SIZE OF HOLE	CORE RECOVERY (%)	PERCOLATION TESTS: DEPTH (FEET) FROM (P, Cs, or Cm)	DEPTH (FEET) TO	LOSS (G.P.M.)	PRESSURE (P.S.I.)	LENGTH OF TEST (MIN.)	ELEVATION (FEET)	DEPTH (FEET)	GRAPHIC LOG	SAMPLES FOR TESTING	CLASSIFICATION AND PHYSICAL CONDITION
RB	WS							110			76.0'-152.8' (Continued): Clay. Material based on data from Drill Hole 8, and drill cuttings.
DC	0							120			
DC	0							130			
								140			
								150			
							6588.2	152.8			152.8': Bottom of hole.
								60			
								70			
								80			*INTERPRETATION: 0.0'-3.3': Fill Material. Material placed for construction camp.
								90			3.3'-18.0': Recent Gravels. Alluvial fan material deposited by Pilgram Creek.

EXPLANATION

CORE LOSS / CORE RECOVERY

RB = Rock bit
WS = Wash sample
DC = Dutch Cone Penetration Equipment

Type of hole . . . D = Diamond, H = Hoystellite, S = Shot, C = Churn
Hole sealed . . . P = Packer, Cm = Cemented, Cs = Bottom of casing

Approx. size of hole (X-series)	Ex = 1-1/2"	Ax = 1-7/8"	Bx = 2-3/8"	Nx = 3"
Approx. size of core (X-series)	Ex = 7/8"	Ax = 1-1/8"	Bx = 1-5/8"	Nx = 2-1/8"
Outside dia. of casing (X-series)	Ex = 1-13/16"	Ax = 2-1/4"	Bx = 2-7/8"	Nx = 3-1/2"
Inside dia. of casing (X-series)	Ex = 1-1/2"	Ax = 1-29/32"	Bx = 2-3/8"	Nx = 3"

Figure 7. – Geologic log of drill hole (sheet 2 of 2).

ANNEX

A1. CALIBRATION OF HYDRAULIC LOAD CELL SYSTEM WITH BOURDON PRESSURE GAUGES

A1.1 General

A1.1.1 This annex describes procedures for calibrating hydraulic load cells and the derivation of actual pressure gauge factors and pressure gauge zero. The actual pressure gauge factors are compared to nominal gauge factors. So long as the actual gauge factors are within tolerences given within this annex, the hydraulic load cell is within calibration requirements and the nominal pressure gauge factors are used for calculating cone and friction sleeve resistances for mechanical cone penetrometers.

A1.2 Derivation of Gauge Factors

A1.2.1 The force necessary to advance a mechanical cone penetrometer is measured by a fluid-filled reservoir with attached pressure gauges to indicate reservoir pressure. Pressure is transmitted to the reservoir by a plunger which is in contact with the inner push rods. To convert pressure gauge readings to cone and friction sleeve resistances, the constant multipliers CF (cone factor) and SF (friction sleeve factor) need to be determined (refer to subpars. 14.4, 14.5.2, 14.5.3, and 14.6). The cone factor, CF, is the plunger area divided by the cone base area. The friction sleeve factor, SF, is inverted to avoid use of a fraction and is calculated as the friction sleeve area divided by the plunger area.

A1.2.2 A standard mechanical friction cone penetrometer has a cone base area of 10 cm^2 and a friction sleeve area of 150 cm^2. For typical hydraulic load cell system, the plunger area is 20 cm^2. (Plunger area may vary with load cell manufacturer and should be checked.) The nominal pressure gauge factors for a typical system would then be calculated as: CF = 20/10 = 2.0 and SF = 150/20 = 7.5. If the plunger area, cone base area, or friction sleeve area differ from these nominal values the cone and friction sleeve factors must be computed using the actual values for the system being utilized.

A1.2.3 The reservoir is pressurized slightly when it is filled. As a result, the pressure gauges in a no-load condition usually read a pressure on the order of 3 to 4 kgf/cm^2. The value of pressure at no load is termed gauge zero, Z. The gauge zero is subtracted from all readings obtained during testing to determine net pressure (refer to subpar. 14.4, 14.5.3, 14.6). The gauge zero can shift during testing due to temperature fluctuations or fluid leakage. Gauge zero is evaluated prior to each sounding and new values are used if change occurs. If the gauge reading drops to zero, leakage is indicated and the fluid level should be checked.

A1.3 Calibration of Hydraulic Load Cells

A1.3.1 The hydraulic load cell is calibrated in a universal testing machine. The testing machine must be accompanied by a calibration certificate, current within the last year, in accordance with ASTM E 4. Bourdon tube pressure gauges should be calibrated in accordance with USBR 1040, prior to attachment to the hydraulic load cell. If electric pressure transducers are used, they should be calibrated in accordance with USBR 1050. The hydraulic load cell is loaded to approximately 80 percent of FSO (full scale output) in a minimum of six equal increments. If the system uses an automatic shutoff valve to divert pressure to higher capacity readout devices, the gauge break threshold pressure (gauge break) should be observed and noted during gauge calibration (refer to subpar. 13.2.2).

A1.3.2 An example calibration is shown on the following figures and tables. This calibration was performed on a hydraulic load cell which uses two Bourdon tube pressure gauges which read in kgf/cm^2. Table A1.1 and figure A1.1 show results of calibration on the low-range gauge. Table A1.2 and figure A1.2 show results of calibrations on the high-range gauge. For discussions on determination of calibration error, refer to USBR 1050.

A1.3.3 The low range gauge zero is recorded; and, in this case, the gauge is loaded in eight increments of 10-kgf/cm^2. As shown in table A1.1, the force at these gauge readings is recorded. Corrected gauge readings are computed by subtracting gauge zero from each gauge reading. The actual pressure is computed by dividing the applied force by an assumed area of plunger (20 cm^2). A best-fit line for the gauge readings is obtained by performing a linear regression analysis on applied force versus corrected pressure gauge reading and then using the linear equation from the regression analysis and the applied force to calculate best-fit gauge values. The non-linearity in the example was a maximum of 0.4 percent FSO, and the maximum calibration error was 9.3 percent at a corrected gauge reading of 6 kgf/cm^2. The slope of the best-fit line, m, would be equivalent to the inverse of the plunger area (1/20 = 0.050) if the load cell were in perfect calibration. The actual cone factor, CF_a, is the reciprocal of the product of the cone base area and the slope, m, of the best-fit line as shown in table A1.1. The actual friction sleeve factor, SF_a, is the product of the friction sleeve area and the slope of the best-fit line. The gauge break is observed to occur at 86 kgf/cm^2. Results of the load range calibrations performed on the high range gauge are shown in table A1.2 and on figure A1.2.

A1.4 Allowable Calibration Errors

A1.4.1 The acceptable range in cone and friction sleeve factors obtained by a linear regression of load range calibration compared to nominal values (CF and SF) is +0.1 and +0.4, respectively. Nonlinearity of the load cell should be $\leq$ 1 percent FSO. Calibration error should be $\leq$ 10 percent of actual pressure. If calibration values fall outside the acceptable range, the load cell should be repaired or replaced. If calibration values fall within the acceptable

GAUGE READING kgf/cm² (R)	APPLIED FORCE kgf (x)	CORRECTED GAUGE READING kgf/cm² (y) [R−Z]	ACTUAL PRESSURE kgf/cm² PA = x/Ap, Ap = 20cm²	BEST FIT LINE kgf/cm² y' FROM REGRESSION y' = mx + b	NONLINEARITY % FSO (y−y')/FSO · 100, FSO = 90 kgf/cm²	CALIBRATION ERROR (PA−y')/PA · 100 %
4.0 = Z	0	0	0	0.5	(−)0.6	−
10.0	107	6	5.4	5.9	0.1	(−) 9.3
20.0	307	16	15.4	16.0	0	(−) 3.9
30.0	498	26	24.9	25.7	0.3	(−)3.2
40.0	697	36	34.9	35.8	0.2	(−)2.6
50.0	899	46	45.0	46.0	0	(−)2.2
60.0	1093	56	54.7	55.9	0.1	(−)2.2
70.0	1295	66	64.8	66.1	(−)0.1	(−) 2.0
80.0	1497	76	74.9	76.4	(−)0.4	(−) 2.0
86.0	-	82	-	-	-	-

LINEAR REGRESSION FOR BEST FIT LINE OF APPLIED FORCE (x) VERSUS CORRECTED GAUGE (y), y = mx + b b = 0.465 m = 0.0507 b = 0.465 kgf/cm² m = 0.0507 1/cm²

ACTUAL CONE FACTOR, CF_a = 1 / (10 cm² · m) = 1.972 CONE BASE AREA = 10 cm²

FRICTION SLEEVE AREA = 150 cm²

ACTUAL SLEEVE FACTOR, SF_a = 150 cm² · m = 7.605 GAUGE BREAK = 86 kgf/cm²

Z = GAUGE ZERO = 4.0 kgf/cm² A_p = ASSUMED PISTON AREA = 20 cm²

A_p = CALCULATED PISTON AREA = 1/m = 19.72 cm²

Table A1.1 - Hydraulic load cell calibration — low range gauge example.

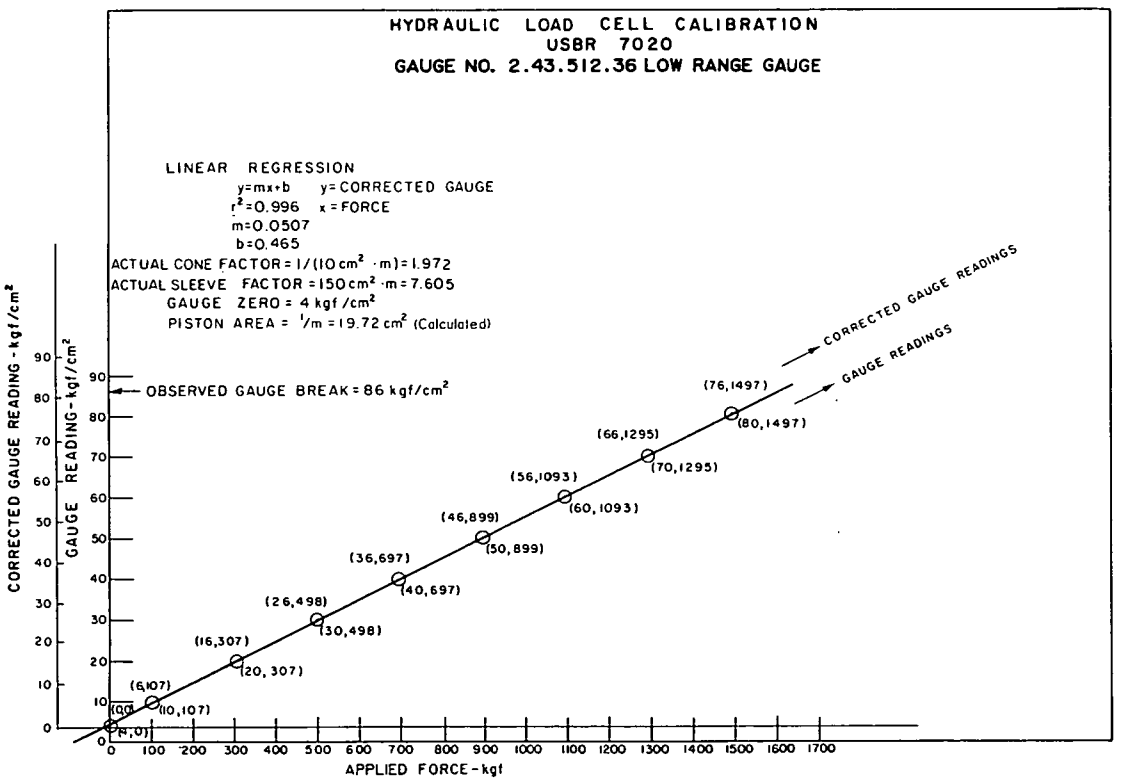

Figure A1.1. - Hydraulic load cell calibration — low range gauge example.

GAUGE READING kgf/cm² (R)	APPLIED FORCE kgf (x)	CORRECTED GAUGE READING kgf/cm² [R-Z] (y)	ACTUAL PRESSURE kgf/cm² PA = x/Ap Ap = 20cm² (PA)	BEST FIT LINE kgf/cm² y' FROM REGRESSION y' = mx+b	NONLINEARITY %FSO $\frac{y-y'}{FSO} \cdot 100$ FSO = 350 kgf/cm²	CALIBRATION ERROR $\frac{PA-y'}{PA} \cdot 100$
11.0 = Z	0	0	0	(-) 0.2	0.1	—
100.0	1851	89.0	92.6	90.0	(-) 0.3	2.8
150.0	2849	139.0	142.5	138.6	0.1	2.7
200.0	3868	189.0	193.4	188.2	0.2	2.7
250.0	4920	239.0	246.0	239.4	(-) 0.1	2.7
300.0	5943	289.0	297	289.2	(-) 0.1	2.7

LINEAR REGRESSION FOR BEST FIT LINE, $y = mx+b$ $m = 0.0487$ $b = (-)\ 0.176$
ACTUAL CONE FACTOR $CF_a = 1/(10\,cm^2 \cdot m) = 2.05$
ACTUAL SLEEVE FACTOR $SF_a = 150\,cm^2 \cdot m = 7.3$
Z = GAUGE ZERO = 11.0 kgf/cm² Ap = 20cm² (ASSUMED)
Ap = 20.53 cm² (CALCULATED)

Table A1.2 - Hydraulic load cell calibration — high range gauge example.

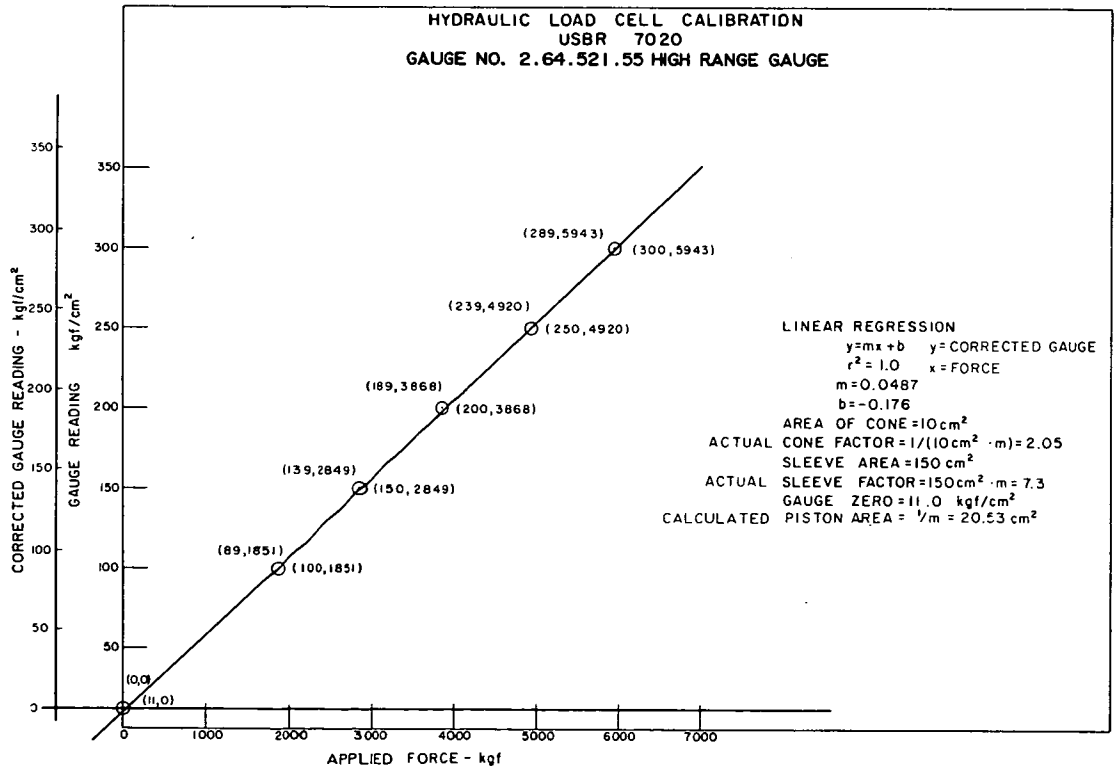

Figure A1.2. - Hydraulic load cell calibration — high range gauge example.

range, the nominal values of cone factor and sleeve factor are used for calculating cone and friction sleeve resistances, respectively.

A1.5 Frequency and Documentation of Calibrations

A1.5.1 Calibration documents consisting of a short report and tables and figures similar to those in this annex are required for newly manufactured hydraulic load cells, repaired load cells, routine calibrations discussed below, and in instances when qualifications or proposals are required for contract negotations.

A1.5.2 The report must be certified by a registered professional engineer or other responsible engineer with knowledge and experience in materials testing for quality assurance. Calibration documents must be retained on file by the offices responsible for performing penetration soundings and should be updated at required intervals. For contract soundings, calibration documents should be obtained prior to contract acceptance and after testing on unaltered equipment.

A1.5.3 Routine calibrations of the hydraulic load cell should be performed after fluid, parts, or readout device have been repaired or replaced; after every 20 soundings; or prior to use on a project or feature. If performance of the cell becomes suspect, it should be checked and calibrated.

APPENDIX

X1. COMPRESSION OF INNER RODS DURING MECHANICAL PENETROMETER SOUNDING

X1.1 General

X1.1.1 When materials having high cone resistance are tested using mechanical cone penetrometers at appreciable depths, elastic compression of the inner rods may preclude accurate gauge readings. Under conditions described below, it may be necessary to add sections of inner rod to maintain required stroke to obtain gauge readings. This appendix provides criteria for adding these sections of inner rod.

X1.2 Mechanical Cone Penetrometer

X1.2.1 The effective stroke of a mechanical cone penetrometer is 71 mm, as shown on figure 1 and discussed in subparagraph 8.1.1. At a penetration rate of 20 mm/s, about 3 to 4 seconds are available to obtain pressure gauge readings. Experience has shown that it takes 1 to 2 seconds to obtain gauge readings. A review of typical mechanical cone penetrometer configurations utilizing standard equipment as described in this procedure indicate that a maximum compression of approximately 35 mm may occur. This maximum compression occurs at maximum depths in deposits having high cone resistance (>500 kgf/cm^2). Since the maximum compression under extreme conditions is approximately 35 mm, there is sufficient time to obtain readings and no additional inner rod length is required.

X1.3 Mechanical Friction Cone Penetrometer

X1.3.1 A stroke of 71 mm is available for both the cone resistance and the cone plus friction sleeve resistance measurements of the mechanical friction cone penetrometer (fig. 4, subpar. 8.1.2). For this penetrometer, approximately 35 mm of stroke is available for both the cone reading and for the cone plus friction sleeve reading. The recommended penetration rate of 10 mm/s for this penetrometer tip allows 3 to 4 seconds to obtain each reading. When compression of the inner rods occurs, the time to obtain the cone plus friction sleeve reading is reduced. A total stroke of at least 55 mm should be maintained to allow 1 to 2 seconds to obtain cone plus friction sleeve readings.

X1.3.2 Figure X1.1 is a plot of pressure gauge readings versus inner rod length (depths) and contains contour lines of 15- and 30-mm compression to evaluate the combinations of pressure and depth at which unacceptable rod compression levels occur. The plot is only applicable to pressure gauge readings obtained on hydraulic load cells whose plunger area is equal to 20 cm^2. Limits also are shown on the figure. Depths of penetration are typically limited to 40 meters. Gauge readings in excess of 250 kgf/cm^2 are typically the limit of useful engineering correlations. Gauge readings in excess of 350 kgf/cm^2 approach the yield stress of the inner rods and should be avoided.

X1.3.3 If gauge readings are sufficiently high and rod lengths are sufficiently long to plot above the curved lines on figure X1.1, it is difficult to obtain gauge readings of the cone plus friction sleeve. If the condition plots within areas A or B on the figure, 15- or 30-mm long inner rod sections can be added. Addition of 1015- and 1030-mm long inner rods can replace a standard 1000-mm inner rod. If softer deposits are then encountered during soundings, inner rod stroke can be decreased by adding 985- or 970-mm long inner rods.

X1.3.4 Soils having high cone resistances are usually not of concern during sub-surface investigations since they have high bearing capacities. If these materials are mixed with softer deposits, the extensions can be left out so that accurate information on weaker soils is obtained. In these cases, unreliable gauge readings of cone plus friction sleeve in the stiffer deposits should be omitted.

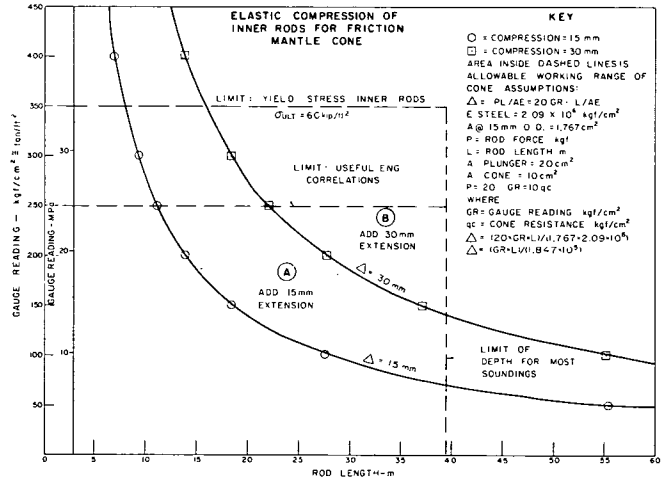

Figure X1.1. – Elastic compression of inner rods for friction mantle cone.

UNITED STATES DEPARTMENT OF THE INTERIOR
BUREAU OF RECLAMATION

USBR 7021-89

PROCEDURE FOR

PERFORMING CONE PENETRATION TESTING OF SOILS — ELECTRICAL METHOD

INTRODUCTION

This procedure is under the jurisdiction of the Geotechnical Services Branch, code D-3760, Research and Laboratory Services Division, Denver Office, Denver, Colorado. The procedure is issued under the fixed designation USBR 7021. The number immediately following the designation indicates the year of acceptance or the year of last revision.

1. Scope

1.1 This designation outlines the procedure for determining the resistance to penetration of a conical pointed penetrometer as it is advanced into subsurface soils at a slow, steady rate.

1.2 This method can also be used to determine the frictional resistance of a cylindrical sleeve located behind the conical point as it is advanced through subsurface soils at a slow, steady rate.

1.3 This method includes the use of both cone and friction-cone penetrometers of the electrical type.

1.4 This method can be used to determine pore pressure development during push of a piezocone penetrometer. Pore pressure dissipation, after a push, can also be monitored for correlation to soil compressibility and permeability.

1.5 Cone penetration test data can be used to interpret subsurface stratigraphy, and through use of correlations it can provide data on engineering properties of soils intended for use in design and construction of earthworks and foundations for structures.

1.6 The test is limited to use in soils whose maximum particle size is less than approximately twice the cone diameter.

NOTE 1.–This method does not include hydraulic pneumatic penetrometers. However, many of the requirements herein could apply to those penetrometers.

2. Auxiliary Tests

2.1 When site-specific correlations are to be developed, cone penetration testing may be accompanied by standard penetration tests, undisturbed soil sampling, and vane shear tests performed in accordance with USBR 7015, 7105, and 7115, respectively.

3. Applicable Documents

3.1 *USBR Procedures*:
USBR 1040 Calibrating Pressure Gauges
USBR 1045 Calibrating Force Transducers (Load Cells)
USBR 1050 Calibrating Pressure Transducers
USBR 3900 Standard Definitions of Terms and Symbols Relating to Soil Mechanics
USBR 7015 Performing Penetration Resistance Testing and Sampling of Soil
USBR 7105 Performing Undisturbed Soil Sampling by Mechanical Drilling Methods
USBR 7115 Performing Field Vane Shear Testing

3.2 *ASTM Standard*:
E 4 Load Verfication of Testing Machines

3.3 *American National Standard*:
ANSI B46.1-1978 Surface Texture, Surface Roughness, Waviness and Lay, American Society of Mechanical Engineers

3.4 *USBR Document*:
Driller's Safety Manual

4. Summary of Method

4.1 A penetrometer tip with a conical point having a 60-degree apex angle and a cone base area of 10 or 15 cm^2 is advanced through the soil at a constant rate of 2 cm/s. The force on the conical point (cone) required to penetrate the soil is measured by electrical methods, a minimum of every 20 cm of penetration. Stress is calculated by dividing the measured force (total cone force) by the cone base area to obtain cone resistance, q_c.

4.2 If a friction sleeve is present on the penetrometer tip, the force exerted on the friction sleeve (located behind the cone) is measured by electrical methods and calculated at a minimum of every 20 cm of penetration. The force (total side friction) is measured when the midpoint of the friction sleeve is at a location which approximately coincides with the location of the cone at the previous cone reading. Stress is calculated by dividing the measured force by the surface area of the friction sleeve to determine friction sleeve resistance, f_s.

4.3 Some penetrometers are capable of registering pore water pressure induced during advancement of the penetrometer tip using an electric pore pressure transducer. These penetrometers are called "piezocones." The piezocone is advanced at a rate of 2 cm/s, and readings are taken at a minimum of every 20 cm of penetration. The dissipation of excess pore water pressure can be

monitored by stopping penetration and observing the time required for pore pressure equalization.

5. Significance and Use

5.1 This test provides a detailed record of cone resistance which is useful for evaluation of site stratigraphy, homogeneity and depth to firm layers, voids or cavities, and other discontinuities. The addition of friction sleeves and pore pressure elements can provide an estimate of soil classification, and additional correlations with engineering properties of soils. When properly performed at suitable sites, the test provides a rapid means for determining subsurface conditions.

5.2 Electric cone penetrometers are capable of performing measurements at much closer intervals than 20 cm of penetration. Smaller measurement intervals provide a more detailed stratographic profile.

6. Terminology

6.1 Definitions are in accordance with USBR 3900.

6.2 Terms not included in USBR 3900 specific to this designation are:

6.2.1 *Apparent Load Transfer.*–Apparent resistance measured on either the cone or friction sleeve of an electric cone penetrometer while that element is in a no-load condition but the other element is loaded. Apparent load transfer is the sum of crosstalk, subtraction error, and mechanical load transfer.

6.2.2 *Baseline.*–A set of zero load readings, expressed in terms of apparent resistance, that are used as reference values during performance of testing and calibration.

6.2.3 *Cone.*–The conical point of a cone penetrometer on which the end bearing component of penetration resistance is developed. The cone has a 60-degree apex angle, a projected (horizontal plane) surface area or cone base area of 10 or 15 cm^2, and a cylindrical extension behind the cone base.

6.2.4 *Cone Penetrometer.*–A penetrometer in which the leading end of the penetrometer tip is a conical point designed for penetrating soil and for measuring the end-bearing component of penetration resistance.

6.2.5 *Cone Resistance, q_c.*–The end-bearing component of penetration resistance. The resistance to penetration developed on the cone is equal to the vertical force applied to the cone divided by the cone base area.

6.2.6 *Cone Sounding.*–An entire series of penetration tests performed at one location when using a cone penetrometer.

6.2.7 *Crosstalk.*–An apparent load transfer between the cone and the friction sleeve caused by interference between the seperate electronic channels.

6.2.8 *ECPT.*–Abbreviation for electric cone penetration test.

6.2.9 *Electric Cone Penetrometer.*–A cone or friction cone penetrometer that uses electric-force transducers, such as strain gauge load cells, built into a nontelescoping penetrometer tip for measuring, within the penetrometer tip, the component(s) of penetration resistance.

6.2.10 *End Bearing Resistance.*–Same as cone resistance.

6.2.11 *Friction Cone Penetrometer.*–A cone penetrometer with the additional capability of measuring the friction component of penetration resistance.

6.2.12 *Friction Ratio, R_f.*–The ratio of friction sleeve resistance, f_s, to cone resistance, q_c, measured at approximately the same depth, expressed as a percentage.

6.2.13 *Friction Reducer.*–A narrow local protuberance on the outside of the push rod surface, placed at a certain distance above the penetrometer tip, which is provided to reduce the total side friction on the push rods.

6.2.14 *Friction Sleeve Resistance, f_s.*–The friction component of penetration resistance developed on a friction sleeve, equal to the vertical shear force applied to the friction sleeve divided by its surface area.

6.2.15 *Friction Sleeve.*–An isolated cylindrical sleeve section on a penetrometer tip upon which the friction component of penetration resistance develops. The friction sleeve has a surface area of either 150 cm^2 or 225 cm^2, depending on the diameter of the penetrometer tip.

6.2.16 *FSO.*–Abbreviation for full-scale output. The output of an electronic force transducer when loaded to 100-percent rated capacity.

6.2.17 *Local Side Friction.*–Same as friction sleeve resistance.

6.2.18 *Penetration Resistance Measuring System.*–A measuring system that provides the means for transmitting information from the penetrometer tip and displaying the data at the surface where it can be seen or recorded. Typical electrical systems use strain gauges and a cable to sense and transmit forces while appropriate signal conditioning and analog or digital data are displayed at the surface.

6.2.19 *Penetrometer.*–An apparatus consisting of a series of cylindrical push rods with a terminal body (end section), called the penetrometer tip, and measuring devices for determination of the components of penetration resistance.

6.2.20 *Penetrometer Tip.*–The terminal body (end section) of the penetrometer which contains the active elements that sense the components of penetration resistance. The penetrometer tip may include additional electronic instrumentation for signal conditioning and amplification.

6.2.21 *Electric Piezocone Penetrometer.*–An electric penetrometer equipped with a low volume fluid chamber, porous element, and pressure transducer for determination of pore pressure at the porous element soil interface.

6.2.22 *Pore Pressure Ratio.*–The ratio of pore pressure in excess of hydrostatic pore pressure, Δ_u, (excess pore pressure) to cone resistance, q_c, expressed as a percentage. (Other definitions have been proposed and may be suitable for specific applications.)

6.2.23 *Push Rods.*–The thick-walled tubes or rods used to advance the penetrometer tip and to guide and shield the measuring system.

6.2.24 *Sleeve Friction and/or Resistance.*–Same as friction sleeve resistance.

6.2.25 *Subtraction Error.*–An apparent load transfer from the cone to the friction sleeve of a subtraction type electric cone penetrometer caused by minor voltage differences in response to load between the two strain element cells.

6.2.26 *Total Force, Q_t.*–The force needed to push the penetrometer tip/push-rod assembly into the soil.

6.2.27 *Total Cone Force, Q_c.*–Total force acting on the cone.

6.2.28 *Total Side Friction, Q_{st}.*–Total force minus total cone force.

7. Interferences

7.1 Refusal, deflection, or damage to the penetrometer may occur in coarse grained soil deposits with maximum particle sizes which approach or exceed the diameter of the cone.

7.2 Partially lithified and lithified deposits may cause refusal, deflection, or damage to the penetrometer.

7.3 Standard push rods can be damaged or broken under extreme loadings. The amount of force that push rods are able to sustain is a function of the unrestrained length of the rods and the weak links in the push rod-penetrometer tip string such as push rod joints and push rod-penetrometer tip connections. Generally, if total thrust exceeds 196 kN, standard push rods can be damaged.

8. Apparatus

8.1 *Electric Cone Penetrometer Tip.*–The penetrometer tip should meet requirements as given below and in subparagraph 11.1. In a typical electric cone penetrometer tip (as shown on fig. 1), the force produced by cone resistance during penetration is measured by a single load cell in the penetrometer tip. In a typical electric friction cone penetrometer tip (as shown on fig. 2), the forces produced by friction sleeve resistance and cone resistance

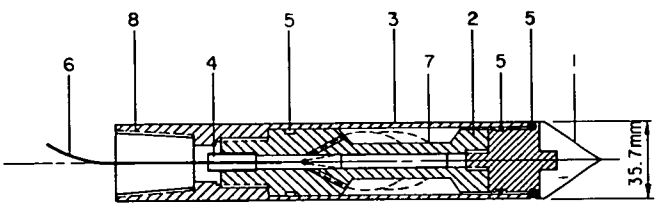

1. Conical point (10cm²) (cone)
2. Load cell
3. Protective mantle
4. Waterproof bushing
5. O-Rings - soil seal - gap
6. Cable
7. Strain gauges
8. Connection with rods

Figure 1. – Typical electric cone penetrometer tip (Robertson and Campanella, 1984 [2]).

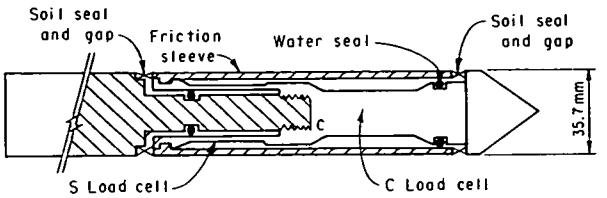

(a) Independent tension-type electric friction — cone penetrometer.

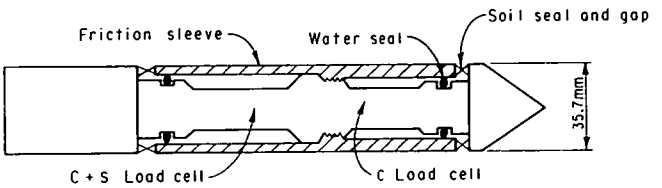

(b) Subtraction-type electric friction — cone penetrometer.

Figure 2. – Typical electric friction — cone penetrometer tip configurations (Schaap and Zuidberg, 1982 [1]).

during penetration are measured by two load cells within the electric friction cone penetrometer tip. When friction sleeve elements are included, either independent or subtraction-type electric friction cone penetrometer tips are acceptable for use. In the subtraction-type electric friction cone penetrometer, the cone and sleeve both produce compressive forces on the load cells. The load cells are joined together in such a manner that the cell nearest the cone (the "C" cell on fig. 2b) measures the compressive force on the cone while the second cell (the "C+S" cell on fig. 2b) measures the sum of the compressive forces on both the cone and friction sleeve. The compressive force from just the friction sleeve is computed then by subtraction. Since friction sleeve forces are usually on the order of 1/10 to 1/100 of cone forces, the subtraction process is subject to a higher level of error than an independent measurement process. In the independent tension-type electric cone penetrometer tip, the cone produces a compression force on the cone load cell (the "C" cell on fig. 2a) while the friction sleeve produces a tensile force on the independent friction sleeve load cell (the "S" cell on fig. 2a). Since the friction sleeve cell strain gauges are designed to respond to a lower level of loading, subtraction errors are alleviated. This penetometer tip design results in a higher degree of accuracy in friction sleeve measurement. Equal end area friction sleeves are preferred for use. If these are not available, the end areas must be documented and the friction sleeve resistance compensated for differences in end areas. The friction sleeve load cell system must operate in such a way that the system is sensitive to only shear stresses applied to the friction sleeve and not to normal stresses.

8.1.1 *Cone.*–Nominal dimensions, with manufacturing and operating tolerances, for the cone are shown on figure 3. The cone has a base area of 10 cm² with an apex angle of 60 degrees. A cylinderical extension of 5 mm

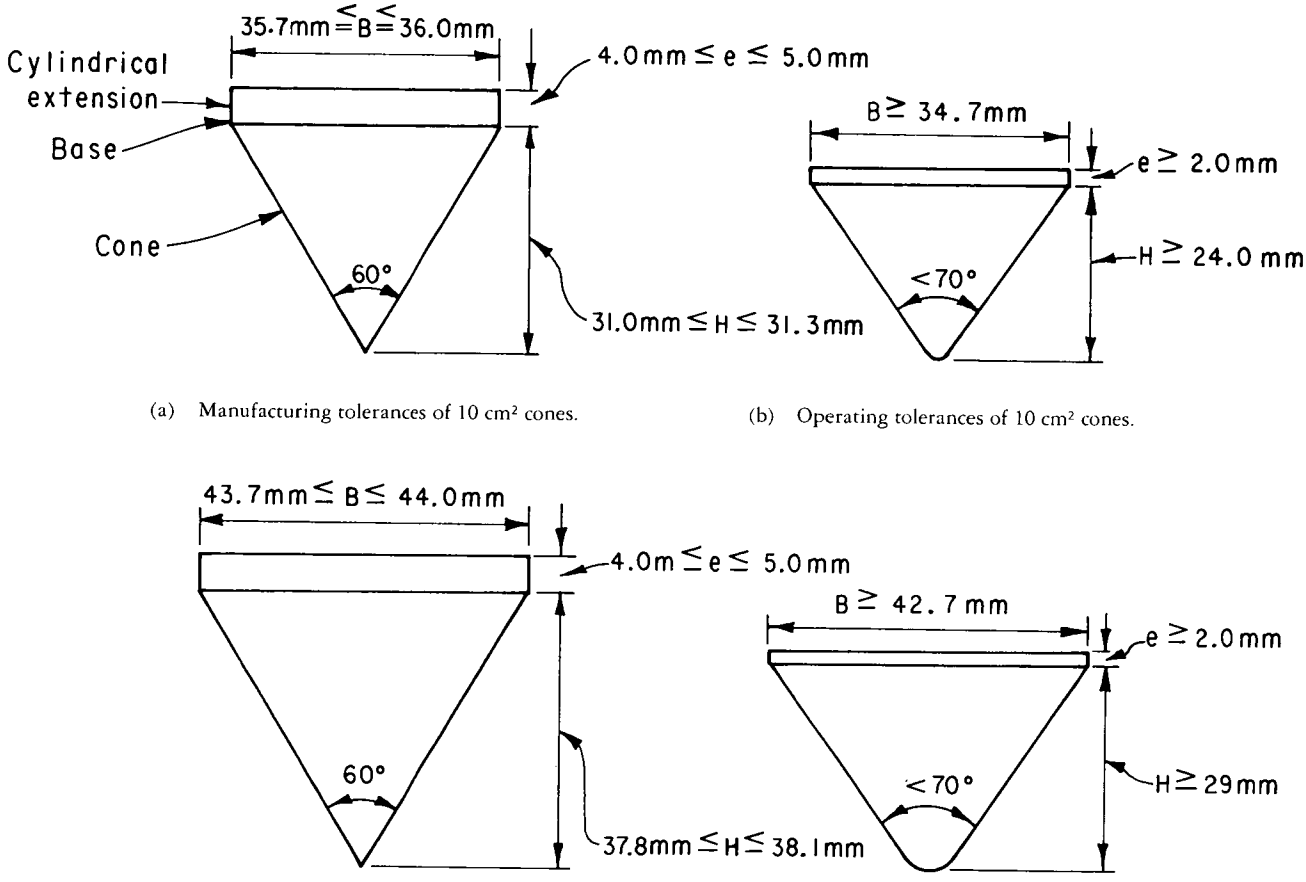

(a) Manufacturing tolerances of 10 cm² cones.

(b) Operating tolerances of 10 cm² cones.

(c) Manufacturing tolerances of 15 cm² cones.

(d) Operating tolerances of 15 cm² cones.

CONE BASE AREA cm²	NOMINAL			TOLERANCE MANUFACTURED (OPERATIONS)		
	BASE DIAMETER B mm	CONE HEIGHT H mm	EXTENSION e mm	B mm	H mm	e mm
10	35.7	31.0	5.0	+0.3 - 0.0 (≥34.7)	+0.3 - 0.0 (≥24.0)	+0.0 - 1.0 (≥ 2.0)
15	43.7	37.8	5.0	+0.3 - 0.0 (≥42.7)	+0.3 - 0.0 (≥29.0)	+0.0 - 1.0 (≥ 2.0)

Figure 3. - Manufacturing and operating tolerances of cones.

or less should be located behind the base of the cone to protect the outer edges of the cone base from excessive wear. In certain cases, it may be desirable to increase the cone diameter. Increasing the diameter, while maintaining a constant force transducer accuracy, requires more force and therefore higher resolution capability in soft soils. The standard increase is to a base diameter which provides a cone base area of 15 cm² while maintaining a 60-degree apex angle. Nominal dimensions, with manufacturing and operating tolerences, for 15-cm² cones are shown on figure 3. The cone is made of steel of a type and hardness suitable to resist wear due to abrasion by soil.

8.1.2 *Friction Sleeve.*-The outside diameter of the manufactured friction sleeve and the operating diameter are equal to the diameter of the base of the cone with a tolerance of +0.35mm and -0.00 mm. The surface area

of the friction sleeve is 150 cm^2 ±2 percent and is manufactured to a surface roughness of 0.5 μm ±50 percent in the direction of its longitudinal axis. No other part of the penetrometer tip will project outside the friction sleeve diameter. The friction sleeve is made from steel of a type and hardness to resist wear due to abrasion by soil. If the cone base diameter is increased, as provided for in subparagraph 8.1.1., the surface area of the friction sleeve should be adjusted proportionally to the cone base area. A 15-cm^2 cone tip should have a sleeve area of 225 cm^2.

8.1.3 *Gap.*–The gap (annular space) between the cylindrical extension of the cone base and the other elements of the penetrometer tip should be kept to the minimum necessary for operation of the sensing devices and should be designed and constructed in such a way to prevent the entry of soil particles. Gap requirements apply to the gaps at either end of the friction sleeve, if one is included, and to other elements of the penetrometer tip.

8.1.3.1 The gap between the cylindrical extension of the cone base and other elements of the penetrometer tip must not be larger than 5 mm.

8.1.3.2 The seal placed in the gap should be properly designed and manufactured to prevent entry of soil particles into the penetrometer tip. It must have a deformability many times larger than the sensing devices.

8.1.3.3 The decrease in penetrometer tip diameter within the gap must be smaller than 4 mm. The outer limits of the gap are to be shaped in such a way that the measurements are not affected by the possible entry of soil particles.

8.1.4 *Diameter Requirements.*–The penetrometer tip must have the same diameter as the base of the cone, within the following tolerances, over a length of 50 cm behind the cone base. The parts of the penetrometer tip behind the cone must have the same diameter as the cone base with a tolerance of +1.0 mm and –0.3 mm (fig. 2). When a friction sleeve is included, the friction sleeve should be located within 10 cm behind the base of the cone. The friction sleeve diameter tolerance is given in subparagraph 8.1.2. The annular spaces and seals between the friction sleeve and other portions of the penetrometer tip must conform to the same specifications as described in subparagraph 8.1.3. The portion of the penetrometer tip located behind the friction sleeve, over a length equivalent to 12 cone base diameters, must have the same diameter as the friction sleeve with a tolerance of +0.0 mm and –0.3 mm.

8.1.5 The axis of the cone, the friction sleeve (if included), and the body of the penetrometer tip must be coincident.

8.1.6 *Sensing Devices.*–The typical load sensing device is a strain gauge load cell which contains temperature compensated bonded strain gauges. The configuration and location of strain gauges should be such that measurements are not influenced by possible eccentricity of loading.

8.1.7 *Electric Piezocone Penetrometer.*–Various electric cone penetrometer tips can contain low volume fluid chambers, porous elements, and pressure transducers to measure pore water pressure. The location of the porous element is limited to the face of the cone or directly behind the cylindrical extension of the base of the cone. A minimum 2-mm cylindrical extension should be maintained for protection of the cone. As these cones are currently being developed and evaluated, care should be taken in selecting this apparatus. The pore pressure transducer must meet requirements given in subparagraph 11.2.

8.2 *Measuring System.*–The electronic signals to and from the sensing devices are to be conditioned and amplified by suitable methods and transmitted to a data recording system. Data storage which permits direct access to the data while performing soundings is recommended. The data recording system and sensing devices must be able to satisfy calibration requirements of subparagraph 11.1 and those shown in the annex. A digitally based data acquisition system is desirable for improved accuracy of measurement. Analog systems provide lower system accuracy, but are acceptable for use.

8.3 *Friction Reducer.*–If a friction reducer is used, it should be located at least 50 cm behind the base of the cone. Friction reducers, which increase push rod outside diameter by approximately 25 percent, are typically used. Do not use friction reducers if total side friction, Q_{st}, on the push rods is to be used for friction pile capacity design.

8.4. *Push Rods.*–Steel rods are required having a cross sectional area adequate to sustain, without buckling, the thrust required to advance the penetrometer tip. The push rods must have an outside diameter equal to the diameter of the penetrometer tip for a length of at least 50 cm behind the base of the cone. Standard 20-metric ton high tensile strength steel push rods are 36-mm outside diameter, 16-mm inside diameter, and have a mass per unit length of 6.65 kg/m. Push rods are supplied in 1-meter lengths. The push rods must be secured together to bear against each other at the joints and form a rigid-jointed string of push rods. The deviation of push rod alignment from a straight axis should be held to a minimum, especially in the push rods near the pentrometer tip, to avoid excessive directional penetrometer drift. Generally, when a 1-meter long push rod is subjected to circular bending—resulting in 1 to 2 mm of center axis rod shortening—the push rod should be discarded. This corresponds to a horizontal deflection of 2 to 3 cm at the center of bending. When using push rods with prestrung electrical cable, the locations of push rods in the string should be varied periodically to avoid permanent curvature.

8.5 *Thrust Machine and Reaction.*–The thrust machine will provide a continuous stroke, preferably over a distance greater than 1 meter. The machine must advance the penetrometer tip and push rods at a smooth, constant rate (see subpar. 13.1.2) while the magnitude of thrust can fluctuate. The thrust machine must be anchored and/or ballasted so that it provides the necessary reaction for the penetrometer and does not move relative to the soil surface during thrust. These requirements preclude use of drilling rigs with a chain pulldown system and rigs whose reaction is transmitted through tires or other suspension systems which allow movement during sounding.

NOTE 2.-Cone penetration soundings usually require thrust capabilities ranging from 98 to 147 kN (10 to 15 metric tons). High mass ballasted vehicles can cause soil surface deformations which may affect penetrometer resistance(s) measured in near-surface layers. Anchored and/or ballasted vehicles may induce changes in ground surface reference level. If these conditions are evident, they should be noted in reports.

9. Reagents and Materials

9.1 *O-Ring Compound.*-A silicon compound for facilitating seals with O-rings.

9.2 *Glycerin* ($HOCH_2CH(OH)CH_2OH$).-For use in pore pressure measurement system.

10. Precautions

10.1 *Safety Precautions.*-Performance of the test usually involves use of a drill rig; therefore, safety requirements as outlined in the document cited under subparagraph 3.4, or in other applicable safety standards, should be observed.

10.2 *Technical Precautions — General:*

10.2.1 Use of penetrometer tip components that do not meet required tolerances or show visible signs of nonsymmetric wear can result in erroneous penetration resistance data.

10.2.2 The application of thrust in excess of rated capacity of the equipment can result in damage to equipment (see par. 7).

10.2.3 A cone sounding must not be performed any closer than 25 borehole diameters from any existing unbackfilled or uncased bore hole.

10.2.4 When performing cone penetration testing in prebored holes, an estimate of the depth below the prebored depth—which is disturbed by drilling—should be made and penetration resistance data obtained in this zone should be noted. Usually, this depth of disturbance is assumed to be equal to at least three borehole diameters.

10.2.5 Significant bending of the push rods can influence penetration resistance data. The use of a tabular rod guide is recommended at the base of the thrust machine and also in prebored holes to help prevent push rod bending.

10.2.6 Push rods not meeting requirements of subparagraph 8.4 may result in excessive directional penetrometer drift and possibly unreliable penetration resistance values.

10.2.7 Passing through or alongside obstructions may deflect the penetrometer and induce directional drift. Note any indications of encountering such obstructions, and be alert for possible subsequent improper penetrometer tip operation.

10.2.8 If the proper rate of advance of the penetrometer is not maintained for the entire stroke through the measurement interval, penetration resistance data may be erroneous.

10.2.9 Differences in penetrometer tip shape and method of advance (for example, between fixed-cone electric and free-cone mechanical operation) may result in significant differences in one or both of the components of penetration resistance.

10.3 *Technical Precautions—Electric Cone Penetrometer:*

10.3.1 Failure of O-ring seals can result in damage to or inaccurate readings from electronic force transducers (load cell). The O-ring seals should be inspected regularly for overall condition and watertightness.

10.3.2 Soil ingress between different elements of a penetrometer tip can result in unreliable data. Seals should be inspected after each sounding, maintained regularly, and replaced when necessary.

10.3.3 Electric cone penetrometer tips should be temperature compensated. If the shift in baseline reading after extracting the penetrometer tip from the soil is so large that the conditions of accuracy as defined in subparagraph 11.1.2.1 are no longer met, penetration resistance data should be noted as unreliable.

10.3.4 If baseline readings do not conform to allowable limits established by accuracy requirements in subparagraph 11.1.2.1, the penetrometer tip must be repaired and recalibrated or replaced.

10.3.5 Electric friction cone penetrometer tips having a friction sleeve end area ratio or a net area ratio not equal to 1.0 will yield cone and friction sleeve resistance data that are erroneous because of unequal dynamic pore pressures encountered during penetrometer tip advancement. The friction sleeve end area ratio is the ratio of the projected areas of top and bottom edges of the friction sleeve on which water pressure can act in the vertical direction. The net area ratio is the ratio of nominal base area of the cone to the area behind the base of the cone on which water pressure can act in a vertical direction. If penetrometer tips of this type are used, these effects should be noted in the report.

10.3.6 The electric piezocone penetrometer tip measures pore water pressures on the exterior of the penetrometer tip by transferring the pressure through a de-aired fluid system to a pressure transducer in the interior of the tip. The measurement system (consisting of transducer port, ports, and porous elements) must be completely saturated prior to testing. Entrained air must be removed from the fluid-filled system or pore pressure fluctuation during penetrometer tip advancement will be incorrect due to response lag from compression of air bubbles.

11. Calibration and Standardization

11.1 *Electric Cone Penetrometers:*

11.1.1 The requirements for newly manufactured or repaired electric cone penetrometers are of importance. Newly manufactured or repaired electric cone penetrometer tips are to be supplied with calibration records as described in the annex. Calibration procedures and requirements given in the annex are for subtraction-type electric cone penetrometers. Calibration requirements for independent-type electric cone penetrometers should equal or exceed those requirements. The calibration records must be

certified as correct by a registered professional engineer or other responsible engineer with knowledge and experience in materials testing for quality assurance. Applied forces or masses must be traceable to calibration standard forces or masses retained by the National Institute of Standards and Technology (National Bureau of Standards). Procedures for calibration of newly manufactured and repaired penetrometer tips are beyond the scope of normal field operating procedures.

11.1.2 Field calibration of electric cone penetrometers is required. Field calibration requires use of a loading device, calibrated to traceable calibration standards, that can independently apply forces up to 80 percent of rated capacity on the cone and friction sleeve load cells.

11.1.2.1 *Baseline Readings.*–Baseline or zero-load readings for both cone and friction sleeve load cells must be taken before and after each sounding. The initial baseline reading should be taken after warming electrical circuits for 15 to 30 minutes and in a temperature environment as close as possible to that of the material to be sounded. The penetrometer tip can be inserted in the ground while electrically warming circuits to stabilize its temperature and then extracted for determination of initial baseline. The baseline reading is a reliable indicator of output stability, temperature-induced apparent load, soil ingress, internal friction, threshold sensitivity, and unknown loading during zero setting. The change in field baseline versus initial reference baseline for both cone and friction sleeve load cells should not exceed 2 percent of FSO of the cone or friction sleeve. If the baseline shift exceeds 2 percent FSO, perform maintenance and cleaning, and perform a load range calibration as described in subparagraph 11.1.2.2. Prior to the load range calibration, obtain a new reference baseline for use as future comparison of field baseline, assuming the penetrometer meets load range requirements given in subparagraph 11.1.2.2. If the cone load cell baseline shift exceeds 2 percent FSO, the cone is likely damaged and will not meet load range criteria in subparagraph 11.1.2.2. Sleeve load cell baseline shift for subtraction-type penetrometers usually can exceed 2 percent FSO and still meet load range criteria. As a result new reference baselines are obtained prior to load range calibration.

11.1.2.2 *Working and Partial Load Range Calibrations.*–At the intervals specified below, working or partial load range calibrations are required to ensure proper linearity of the instrument over the working range of the load cell. Calibrations should be performed with all O-rings and seals in place. Working load range calibrations are to consist of a minimum of 7 points at 0, 2, 5, 10, 25, 50, and 75 percent of full-scale loading for cone and friction sleeve load cells independently. Partial load range calibration checks can be reduced to a minimum of 3 points at 2, 25, and 50 percent of full-scale loading. During load range calibrations, the amount of apparent load transfer during cone or friction sleeve loading must also be monitored. If, in the sounding process, soil ingress or other factors appear to have changed subtraction or baseline error through load transfer, the penetrometer tip should be subjected to a partial load range calibration after removal from the ground but prior to cleaning. Penetrometer tips, with data acquisition systems using fixed reference base lines, that do not meet the requirements given below or in subparagraph 11.1.2.1 must be discarded, recalibrated, or sent to the factory for repair.

Calibration parameter	*Element*	*Requirement*
Zero load shift	Cone and sleeve	≤2% FSO
Calibration error	Cone	±1.5% FSO band
Calibration error	Sleeve	±2.5% FSO band
Apparent load transfer	Cone	±1.0% FSO
Apparent load transfer	Sleeve	±0.2% FSO

For data acquisition systems using the actual best-fit calibration line obtained prior to sounding, linearity of the cone and friction sleeve must be within 1 and 2 percent of FSO, respectively.

11.1.2.2.1 Prior to performing a sounding on a new feature or project, all penetrometer tips must be subjected to full load range calibration.

11.1.2.2.2 During standard production testing, penetrometer tips used for soundings must be subjected to working load range calibration at intervals of once every 40 soundings (approximately every week).

11.1.2.2.3 During heavy production testing, penetrometer tips used for soundings must be subjected to partial load range calibrations daily.

11.2 *Pore Pressure Transducer.*–After the pressure transducer is installed in the penetrometer tip, it is to be calibrated in a water filled pressure chamber large enough to house the active sensing elements of the penetrometer tip. The pressure transducer baseline and apparent pressure at atmospheric pressure are obtained at room temperature. Baseline values are further checked at 0 to 30 °C. Thermal stability of the baseline value must be ≤1 percent FSO. The pressure transducer then is internally zeroed at atmospheric pressure and subjected to a load range calibration consisting of a minimum of five points of both loading and unloading to 80 percent of rated transducer capacity or 0.7 MPa (100 lbf/in²), whichever is least. The calibration error must be ≤0.2 percent of the applied pressure. During hydrostatic loading, cone and friction sleeve load cell output also should be monitored and recorded to evaluate effects of pressure change on these elements.

12. Conditioning

12.1 Electric cone penetrometer and data acquisition systems should be powered for 15 to 30 minutes to stabilize electric circuits before performing soundings.

12.2 Electric piezocone penetrometer soundings require special preparation of the transmitting fluid and porous elements such that entrained air is removed from the system (see subpar. 13.3).

13. Procedure

13.1 *General Requirements*:

13.1.1 Position the thrust machine over the location of the sounding, and lower leveling jacks to raise the

machine mass off the suspension system. Set the hydraulic rams of the penetrometer thrust system to as near vertical as possible. The maximum acceptable deviation of thrust direction is 2 degrees from vertical. The axis of the push rods must coincide with the thrust direction.

13.1.2 Set the hydraulic ram feed rate to advance the penetrometer at a rate of 2.0±0.5 cm/s for all electric cone penetrometers. This rate must be maintained during the entire stroke — even if readings are only taken at intervals.

13.1.3 Check push rods for straightness as required in subparagraph 8.4. Push rods are assembled and tightened by hand, but care must be taken to ensure that the shoulders are tightly butted to prevent damage to the push rods. With electric cone penetrometers, the cable is prestrung through the push rods. Add a friction reducer to the string of push rods — usually the first push rod behind the penetrometer tip.

13.1.4 Inspect penetrometer tips before and after soundings for damage, soil ingress, and wear. In very soft and sensitive soils, dismantle electrical cone penetrometer tips after each sounding to clean and lubricate as required. If damage is found after a sounding, this information must be noted and recorded on the sounding data record.

13.2 *Electric Cone and Friction Cone Penetrometers*:

13.2.1 Power the penetrometer tip and data acquisition system for 15 to 30 minutes.

13.2.2 Perform an initial short penetration test hole; stop penetration and allow the penetrometer tip to reach soil temperature. Withdraw the penetrometer tip, and record baseline readings with the penetrometer tip hanging freely in air or in water, out of direct sunlight. Compare baseline readings with the reference baseline readings for the requirements given in subparagraph 11.1.2.1.

13.2.3 Measure the depth at which readings were taken with an accuracy of ±10 cm from the ground surface.

13.2.4 Determine the cone resistance, or cone resistance and friction sleeve resistance, continuously with depth and record the data at intervals of depth not exceeding 20 cm. With electric cone and friction cone penetrometers, it is desirable to obtain data at increments of 5 cm or less.

13.2.5 At the end of a sounding, extract the penetrometer tip, obtain a final set of baseline readings with the penetrometer tip hanging freely in air or in water, and check them against the initial and reference baselines. Record initial and final baselines on all documents related to the sounding.

13.3 *Electric Piezocone Penetrometers*:

13.3.1 Prepare porous elements using one of the following techniques:

- A pure glycerin bath under a vacuum of at least one atmosphere
- An ultrasonic bath with low heat for 3 hours
- Using de-aired water with the porous elements immersed in boiling water for 4 to 5 hours
- Other suitable means

Porous elements may be prepared and stored in containers of the de-aired fluid medium as long as the containers are evacuated and sealed from air entry.

13.3.2 Assemble the piezoelements with all fluid chambers submerged in the de-aired medium used to prepare the elements. Flush all confined areas with fluid to remove air bubbles. Tighten the cone to effectively seal the flat surfaces. Protect the assembled system from cavitation by enclosing the porous element inside a fluid-filled plastic bag or cap sealed to the penetrometer tip. When sealing, do not pressurize the sealed cap as this will affect initial baseline readings. In order to check that air has been effectively removed from the system and to evaluate response time, subject the assembled penetrometer tip enclosed in a fluid-filled pressure chamber to pressure testing. Response time should be practically instantaneous to pressure application.

13.3.3 When using de-aired water as the fluid medium, it will be necessary to prebore or sound with a pilot penetrometer tip to the water table. The protective cap must be removed during penetration into the soil. When using glycerin, which is more resistant to cavitation than water, it may be possible to penetrate unsaturated layers without cavitating the system and alleviate preboring and element protection requirements.

13.3.4 Record baseline readings with the penetrometer tip hanging freely in air, out of direct sunlight. Compare baseline readings with reference baseline readings for requirements given in subparagraphs 11.1.2.1 and 11.2.

13.3.5 Follow procedures in subparagraphs 13.3.4 and 13.2.5 with the addition of recording pore pressure.

13.4 *Penetrometer Operation and Data Interpretation — Guidelines*:

13.4.1 *Directional Drift of Penetrometer*:

13.4.1.1 For penetration depths exceeding about 12 meters, the penetrometer will drift directionally from vertical alignment. Large deviations in inclination can create nonuniform loading and result in unreliable penetration resistance data. Reduce drift by accurately setting thrust alignment and using push rods which meet tolerances given in subparagraph 8.4.

13.4.1.2 Passing through or along side obstructions such as boulders, cobbles, coarse gravel, soil concretions, thin rock layers, or inclined dense layers will deflect the penetrometer tip and induce drifting. Note and record any indication of encountering such obstructions, and be alert for possible subsequent improper penetrometer tip operations as a sign of serious directional drift.

13.4.1.3 Penetrometer inclination is typically monitored in electric cone penetrometers. Limitations on inclination should be imposed in the system to prevent damage to push rods and nonsymmetric loading of the penetrometer tip. Generally, a 2-degree change in inclination over 1 meter of penetration can impose detrimental push rod bending, and soundings should be terminated. Total drift of over 12 degrees in 10 meters of penetration imposes nonsymmetric loading and, if this should occur, the sounding should be terminated.

13.4.2 *Push Rod Addition Interruptions.*–Short duration interruptions in the penetration rate during addition of each new push rod, can affect initial cone and friction sleeve readings at the beginning of the next push. Note and record the depths at which push rods are added.

13.4.3 *Piezocone Pore Pressure Dissipation Interruptions.*–Pore pressure dissipation studies, for which soundings are stopped for varying time durations, can affect the initial cone, friction sleeve, and dynamic pore pressure readings at resumption of cone penetration. If dissipation tests are performed, be aware of possible rebound effects on initial excess pore pressures. Note and record the depth and duration for which dissipation values are taken.

13.4.4 *Interruptions Due to Obstructions.*–If obstructions are encountered and normal advance of the sounding is stopped to bore through the obstructions, obtain further penetration resistance data only after the penetrometer tip has passed through the estimated zone of disturbance due to drilling. As an alternative, readings may be continued without first making the additional penetration and the disturbed zone evaluated from these data. Note and record the depth and thickness of obstructions and disturbed zones in areas where obstructions are drilled through.

13.4.5 *Unusual Occurrences.*–As data are recorded, it is important to note unusual occurrences in testing. When penetrating gravels, it is important to note "crunching" sounds which may occur when particle size and percentage of coarse particles begin to influence penetration. In many cases, it is important to note the magnitude of thrust required to advance the penetrometer to evaluate when thrust capacity may be exceeded.

13.5 *Withdrawal:*

13.5.1 Withdraw the push rods and penetrometer tip as soon as possible after attaining complete sounding depth.

13.5.2 Upon complete withdrawal of the penetrometer, inspect the penetrometer tip for proper operation.

14. Calculations

14.1 *Cone Resistance, q_c:*

$$q_c = \frac{Q_c}{A_c} \quad (1)$$

where:

q_c = cone resistance, ton/ft², kgf/cm², or MPa
Q_c = force on cone, ton, kgf, or kN
A_c = cone base area, typically 10 cm², ft² or cm²

14.2 *Friction Sleeve Resistance, f_s:*

$$f_s = \frac{Q_s}{A_s} \quad (2)$$

where:

f_s = friction sleeve resistance, ton/ft², kgf/cm², or kPa
Q_s = force on friction sleeve, ton, kgf, or kN
A_s = area of friction sleeve, typically 150 cm², ft², or cm²

14.3 *Friction Ratio, R_f:*

$$R_f = 100 \left(\frac{f_s}{q_c} \right) \quad (3)$$

where:

R_f = friction ratio, %
f_s = friction sleeve resistance, ton/ft², kgf/cm², or kPa
q_c = cone resistance, ton/ft², kgf/cm², or kPa
100 = convert from decimal to percent

Determination of the friction ratio requires obtaining a cone resistance and friction sleeve resistance at the same point in the soil mass. Typically, a previous cone resistance reading at friction sleeve midpoint depth is used for the calculations.

NOTE 3.–In some cases, if readings are compared at the same point in a soil mass which has alternating layers of soft and hard materials, nonexistent layers will be falsely observed in the data because cone resistance is sensed, to varying degrees, ahead of the cone. To compensate, the sensing distance ahead of the cone can be varied such that the cone resistance is actually recorded above or below friction sleeve midheight.

NOTE 4.–The friction sleeve resistance and friction ratio obtained from the mechanical friction cone penetrometer will differ considerably from values obtained from electric friction cone penetrometers. When using soil classification charts which use R_f and q_c, it is important to use charts based on correlations for the type of penetrometer being used.

14.4 *Electric Cone Penetrometers.*–Most electric cone penetrometers in use at the present time measure a change in voltage across a strain gauge element to determine change in length of the strain element. Using known constitutive relationships between stress and strain for the strain element, the applied load may be determined for the cone or friction sleeve. The applied loads then may be converted to stress using the basic equations given in subparagraphs 14.1 and 14.2. Since there are a wide variety of additional, optional measurements currently being obtained with electric cone penetrometers and new ones being continually developed, it is beyond the scope of this procedure to detail the makeup, adjustments, and calculations for these optional measurements. Questions regarding current systems in use or acquisition of new data reduction systems can be directed to the Bureau's Denver Office, Research and Laboratory Services Division, D-3760, Denver, Colorado 80225.

15. Report

15.1 *General:*

Each sounding log should provide as a minimum:

- Operator name
- Project information
- Feature notes
- Sounding date
- Sounding No.
- Sounding location
- Water surface elevation (if available)

Reports should contain information concerning:

- Equipment used
- Procedures followed
- Calibration information
- Tabular graph data
- Graphs

The report should contain a text that discusses items required in subparagraphs 15.2 and 15.3.

Each sounding should be documented with:

A geologic log
Sounding plot
Accompanying tabular output

The comments should contain notes on equipment and procedures — particular to the individual sounding.

15.2 *Equipment.*–The report should include notes concerning:

- Penetrometer manufacturer
- Types of penetrometer tips used
- Penetrometer details such as friction sleeve end areas
- Serial numbers of penetrometer tips
- Pressure gauges
- Type of thrust machine
- Method used to provide reaction force — with notes as to possible surface deformations
- Type of friction reduction system (if any)
- Method of recording data
- Condition of pushrods and penetrometer tip after withdrawal
- Any special difficulties or other observations concerning performance of the equipment

15.3 *Calibration Certifications.*–Calibrations of Bureau-owned equipment should be retained in offices and maintained as outlined in paragraph 11. Soundings performed under contract by others require submittal of calibration records (in conformance with requirements given in para. 11) prior to performance of the contract, for review by the contracting officer. After performance of the contract, the additional field calibration documents (as outlined in par. 11) will be submitted with the report. Field calibration data consisting of pre- and post-sounding baseline values are to be reported with each individual sounding.

15.4 *Graphs.*–Every report of electric cone penetration sounding is to include a cone resistance plot, q_c (ton/ft^2, kgf/cm^2, or kPa) with depth below ground surface (ft or m). (See fig. 4 for an example plot.) Friction cone soundings will include the friction sleeve resistance, f_s (ton/ft^2, kgf/cm^2, or kPa), and friction ratio, R_f (%), on the same plot. The plots should indicate locations of push rod changes and other interruptions as outlined in subparagraphs 13.4.2 through 13.4.5. If it is impossible to show locations of interruptions on the report plots, provide a secondary plot such as an analog strip chart or notes of the occurrences of interruptions. As a minimum, the plot should provide information as outlined in subparagraph 15.1. Electric piezocone penetrometer soundings should provide an additional plot of pore pressure versus depth. If pore pressure ratios using a different definition than that given in subparagraph 6.1.22 are to be reported, the definition should be given on the plots. For uniform presentation of data, the vertical axis (ordinate) should display depth and the horizontal axis (abscissa) should display the test values. An example plot is shown on figure 4. An example of a completed geologic log is shown on figure 5.

15.5 *Report Requirements for Specifications.*–Each sounding to be displayed is to consist of two parts. First, a geologic log of the drill hole which contains report requirements given in subparagraphs 15.1 and 15.2 and any special interpretations or additional data obtained in conjunction with the sounding; second, plots meeting requirements given in subparagraph 15.4.

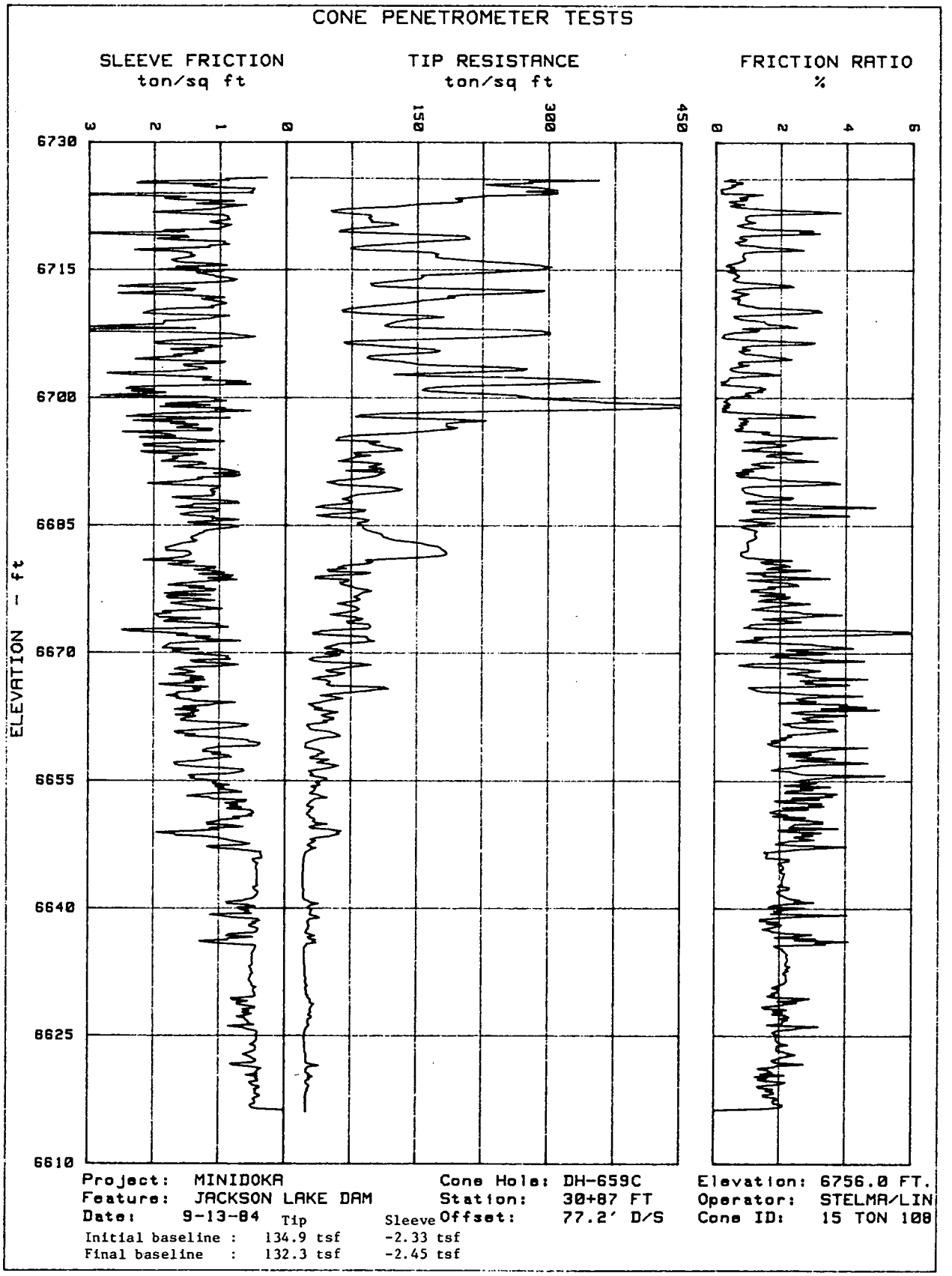

Figure 4. – Cone penetrometer tests — example.

7-1337 (6-74)
Bureau of Reclamation

GEOLOGIC LOG OF DRILL HOLE

SHEET 1 OF 2

FEATURE: JACKSON LAKE DAM — PROJECT: MINIDOKA — STATE: WYOMING

HOLE NO.: DH-659 — LOCATION: D/S TOE OF NORTH DIKE — GROUND ELEV.: 6756.0 — DIP (ANGLE FROM HORIZ.): 90° DOWN

BEGUN: 9-6-84 — FINISHED: 9-13-84 — DEPTH OF OVERBURDEN: UNKNOWN — TOTAL DEPTH: 144.9 — BEARING:

COORDS. N. 1,165,165 E. 365,756

DEPTH AND ELEV. OF WATER LEVEL AND DATE MEASURED: 3.3; 9-13-84 — LOGGED BY: R.A. LINK — LOG REVIEWED BY: A.C. LOCKHART

NOTES ON WATER LOSSES AND LEVELS, CASING, CEMENTING, CAVING, AND OTHER DRILLING CONDITIONS	TYPE AND SIZE OF HOLE	CORE RECOVERY (%)	PERCOLATION TESTS: DEPTH (FEET) FROM (P, Cs, or Cm)	PERCOLATION TESTS: DEPTH (FEET) TO	PERCOLATION TESTS: LOSS (G.P.M.)	PERCOLATION TESTS: PRESSURE (P.S.I.)	PERCOLATION TESTS: LENGTH OF TEST (MIN.)	ELEVATION (FEET)	DEPTH (FEET)	GRAPHIC LOG	SAMPLES FOR TESTING	CLASSIFICATION AND PHYSICAL CONDITION
DRILL EQUIPMENT 0.0-1.5': MOBILE B-80 TRUCK-MOUNTED DRILL. 1.5-13.1': ECPT TRUCK 13.1-30.0': MOBILE B-80 TRUCK-MOUNTED DRILL WITH BEAN 50 WATER PUMP. 30.0-144.9': ECPT TRUCK. DRILLERS 0.0-30.0': ALBERT COULTER 30.0-144.9': DICK LINK AND DAN HUBBS DRILL SETUP SET UP ON ACCESS ROAD AT D/S TOE OF NORTH DIKE NEAR STA. 30+90. DRILLING METHODS 0.0-1.5': DRILLED WITH 7" HOLLOW-STEM FLIGHT AUGERS. SET 2" I.D. PVC TO 1.5" AND PULLED AUGERS, BACKFILLING AROUND PVC. 1.5-13.1': SOUNDING WITH ECPT ON APPROX 5-CENTIMETER (0.16-FOOT) INTERVALS USING 15-TON CONE (10B) EQUIPPED WITH NONPIEZOMETER TIP. 13.1-15.8': DRILLED WITH 7" HOLLOW-STEM FLIGHT AUGERS. SET BX CS TO 15.8'. ATTEMPTED ECPT SOUNDING, BUT CONE LODGED IN FLOWING SAND INSIDE BX CS AT ABOUT 10'; SOUNDING FORCED CS DOWN WITH CONE UNTIL BX CS REFUSED AT 30.1' AND TOP 3 ONE-METER RODS IN DRILL STRING SHEARED OFF. MOVED ECPT TRUCK OFF HOLE AND EXCAVATED TRENCH TO 12' TO RECOVER CONE, SOUNDING CABLE AND DRILL STRING, USING BACKHOE AND FRONT-END LOADER; TRENCH BACKFILLED WITH SOIL AND ROAD FILL.		0 0 0						6754.5 6751.4 6748.8 6738.7 6728.5 6717.5 6714.4 6713.3 6703.3 6702.0 6697.5 6694.9 6693.6 6667.8 6663.3 6661.1	10 20 30 40 50 60 70 80 90			15.8-30.0': DRILLED WITH 2-7/8" TRICONE ROLLER RB USING CLEAR WATER AS CIRCULATING FLUID. NX CS ADVANCED BEHIND DRILLING TO 30.0'. INSERTED 2" I.D. PVC WITH TAPE-SEALED BOTTOM TO 30.0'. 30.0-144.9': SOUNDING WITH ECPT. AS DESCRIBED ABOVE GEOLOGIC INTERPRETATION: 0.0-1.5': ROAD FILL (F) 1.5-144.9': FLUVIOLACUSTRINE SEDIMENTS (OF). 1.5-4.6': OFC; PREDOMINANTLY SILT AND CLAY WITH A VARIABLE CONTENT OF SAND. 4.6-7.2': OFS; PREDOMINANTLY SAND WITH A VARIABLE CONTENT OF SILT AND CLAY. 7.2-17.3': OFG; PREDOMINANTLY GRAVEL WITH A VARIABLE CONTENT OF SAND AND SILT. 17.3-27.5': OFS; SAME AS ABOVE. 27.5-38.5': OFG; SAME AS ABOVE. 38.5-41.6': OFS; SAME AS ABOVE. 41.6-42.7': OFG; SAME AS ABOVE. 42.7-52.7': OFS; SAME AS ABOVE. 52.7-54.0': OFG; SAME AS ABOVE. 54.0-58.5': OFS; SAME AS ABOVE. 58.5-59.3': OFG; SAME AS ABOVE. 59.3-61.1': OFS; SAME AS ABOVE. 61.1-62.4': OFG; SAME AS ABOVE. 62.4-88.2': OFS; SAME AS ABOVE. 88.2-89.0': OFC; SAME AS ABOVE. 89.0-92.7': OFS/OFC: ALTERNATING LAYERS OF SILTY SAND WITH SILT AND CLAY RANGING FROM 0.05-0.25 METERS (0.16-0.82 FEET) THICK. 92.7-94.9': OFC; SAME AS ABOVE. 94.9-95.7': OFS; SAME AS ABOVE. 95.7-100.5': OFC; SAME AS ABOVE. 100.5-101.6': OFS; SAME AS ABOVE. 101.6-120.6': OFC; SAME AS ABOVE. 120.6-123.4': OFS/OFC; SAME AS ABOVE. 143.1-144.9': OFC; SAME AS ABOVE. 144.9': BOTTOM OF HOLE. NOTES: 1. GEOLOGIC INTERPRETATION FROM 13.1-30.0' BASED ON DRILLING CONDITIONS, CUTTINGS RETURN AND DRILLER'S NOTES; FROM 0.0-13.1' AND 30.0-144.9' INTERPRETATION BASED ON ECPT DATA

CORE LOSS / CORE RECOVERY

EXPLANATION

ECPT = ELECTRONIC CONE PENETROMETER TEST
RB = ROCK BIT — CS = CASING
DEG = DEGREES — SZ = SIZE OF CASING
NOTE: ALL METRIC DEPTHS CONVERTED TO ENGLISH SYSTEM USING CONVERSION FACTOR OF 3.28 FEET PER METER.

Type of hole: D = Diamond, H = Hoystellite, S = Shot, C = Churn
Hole sealed: P = Packer, Cm = Cemented, Cs = Bottom of casing

Approx. size of hole (X-series)	Ex = 1-1/2",	Ax = 1-7/8",	Bx = 2-3/8",	Nx = 3"
Approx. size of core (X-series)	Ex = 7/8",	Ax = 1-1/8",	Bx = 1-5/8",	Nx = 2-1/8"
Outside dia. of casing (X-series)	Ex = 1-13/16",	Ax = 2-1/4",	Bx = 2-7/8",	Nx = 3-1/2"
Inside dia. of casing (X-series)	Ex = 1-1/2",	Ax = 1-29/32",	Bx = 2-3/8",	Nx = 3"

Uncorrected field ECPT data were used in the interpretation of the geologic units encountered in this sounding.

12-85: Revised station, added coordinates

Figure 5. - Geologic log of drill hole (sheet 1 of 2) — example.

7-1337 (6-74)
Bureau of Reclamation

GEOLOGIC LOG OF DRILL HOLE

SHEET. 2 OF. 2

FEATURE. JACKSON LAKE DAM. PROJECT. MINIDOKA. STATE. WYOMING.
HOLE NO. DH-659. LOCATION. D/S TOE OF NORTH DIKE.
COORDS. N. 1,165,165. E. 365,756. GROUND ELEV. 6756.0. DIP (ANGLE FROM HORIZ.). 90.0° DOWN.
BEGUN. 9-6-84. FINISHED. 9-13-84. DEPTH OF OVERBURDEN. UNKNOWN. TOTAL DEPTH. 144.9. BEARING.
DEPTH AND ELEV. OF WATER LEVEL AND DATE MEASURED. 3.3; 9-13-84. LOGGED BY. R.A. LINK. LOG REVIEWED BY. A.C. LOCKHART.

NOTES ON WATER LOSSES AND LEVELS, CASING, CEMENTING, CAVING, AND OTHER DRILLING CONDITIONS	TYPE AND SIZE OF HOLE	CORE RECOVERY (%)	PERCOLATION TESTS: DEPTH (FEET) FROM (P, Cs, or Cm)	PERCOLATION TESTS: DEPTH (FEET) TO	PERCOLATION TESTS: LOSS (G.P.M.)	PERCOLATION TESTS: PRESSURE (P.S.I.)	PERCOLATION TESTS: LENGTH OF TEST (MIN.)	ELEVATION (FEET)	DEPTH (FEET)	GRAPHIC LOG	SAMPLES FOR TESTING	CLASSIFICATION AND PHYSICAL CONDITION
DRILLING CONDITIONS 0.0-1.5': ROUGH, BUT EASY. 1.5-7.2': SMOOTH AND STEADY PUSH. 7.2-13.1': VERY ROUGH. COMPUTER QUIT FOR INCLINATION AT 8.1' ENGAGED MANUAL OVERRIDE AND CONTINUED SOUNDING. SOUNDING WAS STOPPED AT 13.1 DUE TO HIGH TIP RESISTANCE AND INCLINATION READINGS. 13.1-15.8': FAST AND EASY. 15.8-20.0': EASY. 20.0-30.0': SLOW. 30.0-38.5': ROUGH PUSH. 38.5-41.6': SMOOTH AND STEADY PUSH. 41.6-42.7': ROUGH PUSH. COMPUTER QUIT FOR INCLINATION AT 41.6'; ENGAGED MANUAL OVERRIDE AND CONTINUED SOUNDING. 42.7-144.9': SMOOTH AND STEADY PUSH. INCLINATION AT HOLE BOTTOM WAS 11.7 DEG CASING RECORD DATE SZ DEPTH HOLE DEPTH CS 9-7 BX 15.8 15.8 9-12 NX 30.0 30.0 WATER RETURN 0.0-30.0': 100% 30.0-144.9': NO WATER USED. WATER COLOR 0.0-30.0': BROWN AND GRAY. 30.0-144.9': NO WATER USED. WATER LEVEL DURING DRILLING DATE DEPTH HOLE WATER LEVEL 9-13 30.0 3.3 HOLE COMPLETEION PULLED ALL NX CS AND PVC: HOLE LEFT OPEN. PURPOSE OF HOLE TO DETERMINE STRATIGRAPHY OF FOUNDATION FOR NORTH DIKE.	10 20 30 40 50 60 70 80 90	0						6655.5 6635.4 6632.6 6616.3 6612.9 6611.1	110 120 130 140 150 160 170 180 190			

CORE LOSS
CORE RECOVERY

EXPLANATION

ECPT = ELECTRONIC CONE PENETROMETER TEST
RB = ROCK BIT CS = CASING
DEG = DEGREES SZ = SIZE OF CASING
NOTE: ALL METRIC DEPTHS CONVERTED TO ENGLISH SYSTEM USING CONVERSION FACTOR OF 3.28 FEET PER METER.

Uncorrected field ECPT data were used in the interpretation of the geologic units encountered in this sounding.

12-85: Revised station, added coordinates

Type of hole . . . . . D = Diamond, H = Hayesteliite, S = Shot, C = Churn
Hole sealed . . . . . P = Packer, Cm = Cemented, Cs = Bottom of casing
Approx. size of hole (X-series) . . Ex = 1-1/2", Ax = 1-7/8", Bx = 2-3/8", Nx = 3"
Approx. size of core (X-series) . . Ex = 7/8", Ax = 1-1/8", Bx = 1-5/8", Nx = 2-1/8"
Outside dia. of casing (X-series). Ex = 1-13/16", Ax = 2-1/4", Bx = 2-7/8", Nx = 3-1/2"
Inside dia. of casing (X-series) . . Ex = 1-1/2", Ax = 1-29/32", Bx = 2-3/8", Nx = 3"

Figure 5. - Geologic log of drill hole (sheet 2 of 2) — example.

ANNEX

A1. CALIBRATION REQUIREMENTS ON NEWLY MANUFACTURED OR REPAIRED ELECTRIC CONE PENETROMETERS

A1. Introduction

A1.1 This annex describes procedures and requirements for calibrating electric cone penetrometers. The evaluation of electric cone penetrometer calibration as described in this annex is a quality assurance standard for newly manufactured and repaired penetrometer tips. Many of the standards may be impractical to evaluate under field operating conditions. Therefore, determination of these calibration errors for any individual penetrometer tip should be performed in a laboratory environment under ideal conditions by the manufacturer or other qualified personnel with necessary knowledge, experience, and facilities.

A1.2 The electric cone penetrometer is a delicate electrical instrument subjected to severe field conditions. Proper use of such an instrument requires detailed calibration after manufacture and continuous field calibrations. Years of electric cone penetrometer design and performance experience have resulted in refined cone designs and calibration procedures which make the electric cone penetrometer a highly reliable instrument. Reports of these experiences form the basis for requirements in this annex [1, 2].

A1.3 The required calibration tolerances developed in this annex are based on subtraction type electric cone penetrometers. These penetrometers are more robust than electric cone penetrometers with independent strain elements and are the most widely used design. The subtraction type penetrometer, however, has less precision due to the electrical subtraction process [1, 2]. As a result, calibration tolerances given here are considered maximum values and requirements for more sensitive electric cone penetrometer tips imply smaller tolerances having greater precision. The calibration process consists of loading the penetrometer tip with reference forces and comparing measured output to the reference.

A1.4 Simple analog systems use a signal conditioning unit above ground that supplies excitation voltages to the strain elements in the penetrometer tip, then amplifies the return signal to usable levels for the data recording and data analysis system. Calibration of these systems requires evaluation of input force versus voltage output relationships. With analog systems, errors may occur when integrating voltage data into cone and friction sleeve resistances. As a result, it is required that calibrations discussed in this annex be that of input force versus cone or friction sleeve resistance obtained through the data recording system used.

A1.5 With the advent of improved electronic systems, system precision has increased but the same input force versus voltage output calibrations are required to "tune" the penetrometer tip. Microprocessors reduce the data to obtain the cone and friction sleeve resistances, but the microprocessors are not immune from system drift. So, with these systems, calibrations of applied force (input force) versus cone or friction sleeve resistance output from the microprocessor are required also.

A2. Terms Related to Calibrations

A2.1 Figure A1.1 is a graphical depiction of terms related to transducer calibrations as set forth by the Instrument Society of America [1]. The example calibration that follows, deals with zero-load error, nonlinearity, hysteresis, and calibration error.

A2.2 To evaluate several of these values, the FSO (full-scale output) of the penetrometer tip is needed. Electrical cone penetrometer tips usually are available in nominal capacities of 5, 10, and 15 metric tons. Typical full-scale outputs for these penetrometer tips follow.

Nominal capacity, metric tons	*Full-scale output of cone, q_c*		*Full-scale output of friction sleeve, f_s*	
	ton/ft²	MPa	ton/ft²	kPa
5	500	50	5	500
10	1000	100	10	1000
15	1000	100	10	1000

It is important to check with the manufacturer on the full scale output of electric cone penetrometer tips to avoid overloading and damaging penetrometer tips.

A3. Zero Load Baseline Values

A3.1 Zero-load output variation of the electric cone penetrometer tips during calibration is a reliable indicator of output stability, internal O-ring friction, and

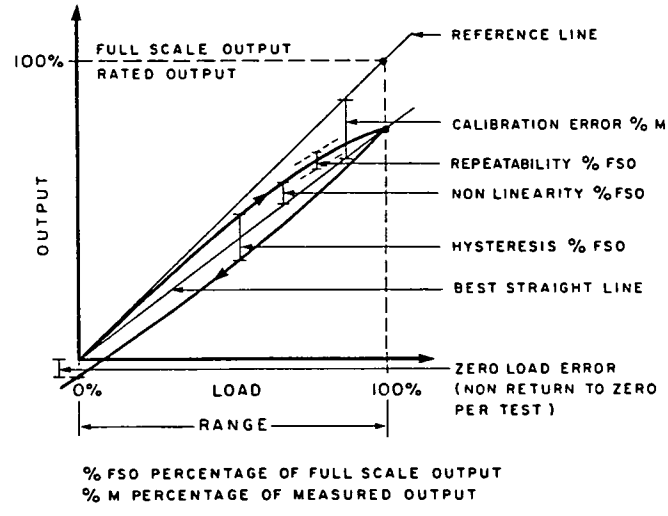

Figure A1.1. – Definition of terms related to calibration (Schaap and Zuidberg, [1] 1982).

temperature-induced apparent load. The variation in zero-load output is affected by temperature fluctuation because temperature compensated strain gauges do not compensate for modulus of elasticity and *K*-factor changes with temperature [1]. Also, penetrometer tips that contain amplifiers can be hindered by temperature shifts if the amplifiers are not temperature compensated [2]. As a result, the zero-load output is to be evaluated at temperatures of 0 and 30 °C for evaluation of thermal stability.

A3.2 Typically, there are two methods to adjust for zero-load variations. With older analog systems, a zero-load output voltage under set amplification and signal conditioning requirements is obtained (method 1). To set this voltage output to zero, simple strip chart adjustments are made to locate the pen at zero load on the chart. The offset of the pen from original zero-load voltage is converted to equivalent drift in terms of cone and friction sleeve resistance by knowing the linear behavior of voltage versus load or by knowing the chart scaling factors. In any case, the drift in zero-load voltage output is converted to changes in apparent cone or friction sleeve resistance.

A3.3 Some newer systems with microprocessors provide "reference baseline" values for cone or friction sleeve resistance which are not equal to zero but are assigned positive or negative values depending on the electronics of the system. The zero-load error is evaluated by taking the difference between new and initial reference baseline values (method 2). For discussions of zero-load error, the term baseline is used for both methods. The term "reference baseline" for older analog systems refer to the "initial voltage at zero load", but zero-load error is expressed as a change in apparent resistance divided by FSO resistance of the cone or friction sleeve.

A3.4 Newly manufactured or repaired penetrometer tips are first cycled to a minimum of 80 percent of FSO — five times at room temperature — to remove any residual nonlinearity. After cycling, an initial reference baseline value is established at room temperature after the cone has been electrically powered for about 30 minutes. To evaluate thermal stability, the penetrometer tip is stabilized at temperatures of 0 and 30 °C and new baseline values are obtained. The change in baseline values must be $\leq$1.0 percent FSO of either cone or friction sleeve resistances.

A4. Load Range Calibration

A4.1 The electric cone penetrometer system is load tested in a universal testing machine or specially designed cone penetrometer calibration device capable of independently loading the cone and friction sleeve. If used, the universal testing machine must be accompanied by a calibration certificate (current within the last year) in accordance with ASTM E 4. If a cone calibration apparatus is used, it should also be accompanied by a calibration document current within the last year. The calibration document shows that applied forces or masses are traceable to standard forces or masses retained by the National Institute of Standards and Technology (National Bureau of Standards). When calibrating subtraction-type penetrometer tips, it is possible to waive the independent sleeve measurement requirement. For requirements on calibrations without independent sleeve loadings, contact the Bureau's Research and Laboratory Services Division, Denver Office, Code D-3760, Denver, Colorado 80225. The universal testing machine or cone calibration devices must be capable of loading the penetrometer tip to 100-percent FSO.

A4.2 Example calibrations of an electric cone penetrometer are shown in tables A1.1 and A1.2 and on figures A1.2 and A1.3. The calibrations were performed on a 10-ton subtraction-type electric cone penetrometer. The measured output was a readout of cone and friction sleeve resistance obtained through a microprocessor based data anyalsis system. An initial baseline was taken and then subtracted to obtain zero resistance at zero load.

A4.3 As shown in table A1.1, the cone is first loaded. This loading is to be performed after the cone is subjected to five cycles of compressive loading and reference baselines, or internal zeroing, have been obtained at room temperature. The cone is loaded in a minimum of seven increments at forces equivalent to 0, 2, 20, 40, 60, 80, and 100 percent FSO for the cone. At each increment of force, both cone and sleeve resistance are recorded. The actual cone resistance is computed by dividing the applied force by the cone base area. The "best straight line" (see fig. A1.1) is determined by drawing a straight line between the origin and the force transducer output of 100-percent rated capacity. The linearity is the difference between measured cone resistance and best-straight line cone resistance divided by the cone FSO. Hysteresis is evaluated by comparing the difference between cone resistance at the same level of applied force in loading and unloading and dividing by cone FSO. Calibration error is calculated by taking the difference between the best-straight line cone resistance and actual cone resistance and dividing by the actual cone resistance. Calibration error becomes larger with smaller measured outputs and; therefore, it is not evaluated at loadings equivalent to less than 20 percent of cone FSO. When penetrometers require greater precision, more sensitive, lower capacity penetrometer tips can be specified by requiring tighter specification of calibration error at lower levels of applied force.

A4.4 When calibrating the cone, the friction sleeve resistance is monitored to evaluate apparent load transfer. With a subtraction-type electric cone penetrometer tip, the apparent friction sleeve resistance is caused by electrical subtraction error, crosstalk, and any load transferred mechanically to the sleeve. With a cone, which provides for independent cone and sleeve measurements, apparent friction sleeve resistances are caused by electrical crosstalk and mechanical load transfer. Apparent load transfer must be less than 1 percent of FSO of the friction sleeve (1000 kPa).

A4.5 As shown in table A1.1 and on figure A1.2, maximum nonlinearity is 0.07 percent, maximum hysteresis is 0.06 percent, maximum calibration error is 0.12 percent, and maximum apparant load transfer is 0.04 percent. For this calibration, the zero load or nonreturn to zero was 0.08 MPa or 0.08-percent FSO.

APPLIED FORCE kN x	MEASURED CONE RESISTANCE qc (MN/m²) y	MEASURED FRICTION SLEEVE RESISTANCE fs (kN/m²)	ACTUAL CONE RESISTANCE (MN/m²) $QA = \frac{x}{10cm^2}$	BEST STRAIGHT LINE (MN/m²) APPROXIMATION $y' = mx + b$	LINEARITY (%FSO) $\frac{y-y'}{FSO} \cdot 100$ CONE FSO = 100 MPa	HYSTERESIS (%FSO)	CALIBRATION ERROR (% M.O.) $\frac{QA-y'}{QA} \cdot 100$
0	17.51	-130.9	(BASELINE	READING)			
0	0	1	0				
2	1.99	4	2.00	2.00	-0.01	0.06	N/A
20	19.99	3	20.00	19.98	0.01	0.06	0.10
40	39.96	0	40.00	39.95	0.01	0.05	0.12
60	59.93	-1	60.00	59.93	0	0.02	0.12
80	79.92	1	80.00	79.90	0.02	0.02	0.12
100	99.88	2	100.00	99.88	0		
80	79.90	1	80.00	79.90	0		
60	59.91	-1	60.00	59.93	-0.02		0.12
40	39.91	0	40.00	39.95	-0.04		0.12
20	19.93	3	20.00	19.98	-0.05		0.10
2	1.93	3	2.00	2.00	-0.07		N/A
0	-0.08	3	0				
0	17.59	-130.7	(BASELINE	READING)			

BEST STRAIGHT LINE APPROXIMATION: y = mx+b, m = 99.88/100 = 0.9988 b=0
ZERO LOAD ERROR: 0.08 MPa ÷ 100 MPa x 100 = 0.08%
MAXIMUM APPARENT LOAD TRANSFER ERROR: 4 kN/m² ÷ 1000 kN/m² x 100 = 0.4 %
M.O. : MEASURED OUTPUT

Table A1.1. – Electric cone penetrometer cone calibration — example.

APPLIED FORCE (kN) x	MEASURED CONE RESISTANCE qc (MN/m²)	MEASURED FRICTION SLEEVE RESISTANCE fs (kN/m²) y	ACTUAL FRICTION SLEEVE RESISTANCE (MN/m²) $FA = \frac{x}{150cm^2}$	BEST STRAIGHT LINE kN/m² $y' = mx + b$	LINEARITY (% FSO) $\frac{y-y'}{FSO} \times 100$ FSO=1000 $\frac{kN}{m^2}$	HYSTERESIS (%FSO)	CALIBRATION ERROR (%M.O.) $\frac{FA-y'}{FA} \cdot 100$
0	17.51	-130.9					
0	0	3					
0.3	0	19.79	20.0	19.94	-0.02	0.11	N/A
3.0	0	196.0	200.0	199.4	-0.34	0.20	0.30
6.0	0	396.0	400.0	398.8	-0.28	0.30	0.30
9.0	0	597.0	600.0	598.2	-0.12	0.30	0.30
12.0	0	799.0	800.0	797.6	0.14	0.30	0.30
15.0	0	997.0	1000.0	997.0	0.00		
12.0	0	796.0	800.0	797.6	-0.16		
9.0	0	594.0	600.0	598.2	-0.42		0.30
6.0	0	393.0	400.0	398.8	-0.58		0.30
3.0	0	194.0	200.0	199.4	-0.54		0.30
0.3	0	19.81	20.0	19.94	-0.13		N/A
0	0	-1					
0	17.45	-126.9					

BEST STRAIGHT LINE: y = mx+b m = 997.0/15.0 = 66.47 b = 0.00
APPARENT LOAD TRANSFER = 0
ZERO LOAD ERROR = 0.1 % FSO
M.O.: MEASURED OUTPUT

Table A1.2. – Electric cone penetrometer sleeve calibration — example.

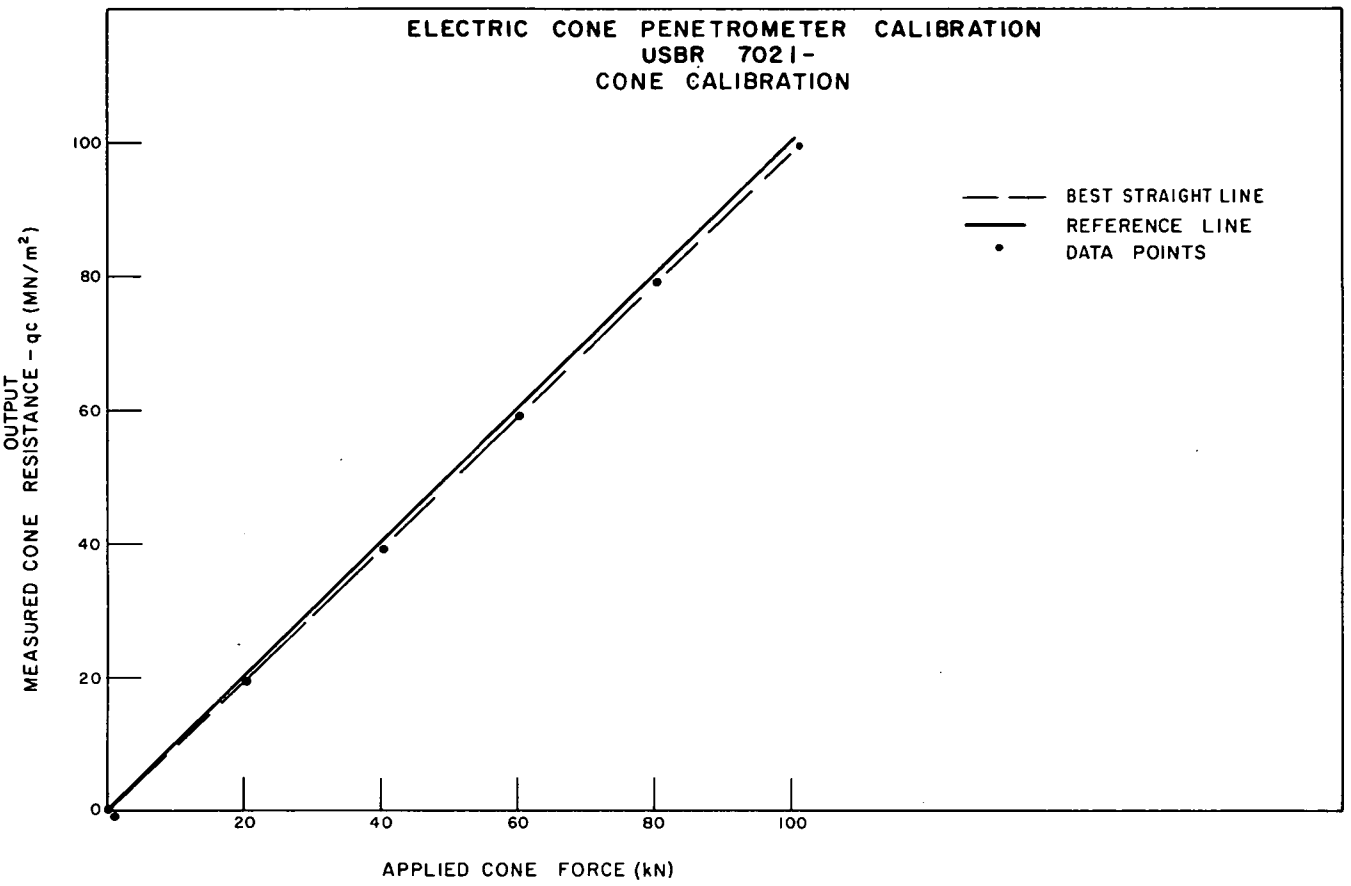

Figure A1.2. – Electric cone penetrometer cone calibration — example plot.

A4.6 Table A1.2 and figure A1.3 show the calibration of the friction sleeve element, independent of cone loading. This is accomplished by removing the cone and loading the bottom edge of the friction sleeve. Again, the forces are applied in seven increments at 0, 2, 20, 40, 60, 80 and 100 percent of FSO, which is approximately 1000 kPa. Nonlinearity, hysteresis, and calibration error are evaluated in the same manner as calibrations for the cone. During friction sleeve calibration, cone resistance is monitored to evaluate apparant load transfer which was not apparent in this calibration. Zero-load error was 0.1 percent FSO on unloading.

Calibration parameter	*Element*	*Requirement**
Zero-load error	Cone and sleeve	≤0.5% FSO
Zero-load thermal stability	Cone and sleeve	≤1.0% FSO
Nonlinearity	Cone and sleeve	≤1.0% FSO
Hysteresis	Cone and sleeve	≤1.0% FSO
Calibration error	Cone	≤0.5% MO at ≥20% FSO
	Sleeve	≤1.0% MO at ≥20% FSO
Apparant load transfer	Cone	≤0.5% FSO
	Cone and sleeve	≤0.05% FSO

* Repaired electric cone penetrometers are required to meet these standards in the lower 50 percent of FSO, only.

A5. Calibration Requirements

A5.1 Calibration requirements developed for electric cone penetrometers are based on past experience with subtraction-type electric cone penetrometers and; as a result of this experience, represent the minimum precision requirement of electric cone penetrometers. In cases where a higher level of precision is required, stricter calibration requirements would be required. Newly manufactured or repaired electric cone penetrometers are required to meet the following requirements:

A6. Documentation of Calibrations

A6.1 Laboratory calibration documents consisting of a short report on the equipment and methods of testing, along with tables and figures similar to those in this annex, are required for the following occurrences:

- When new penetrometer tips are received
- When damaged penetrometer tips are repaired
- In instances when qualifications or proposals are required for contract negotiations

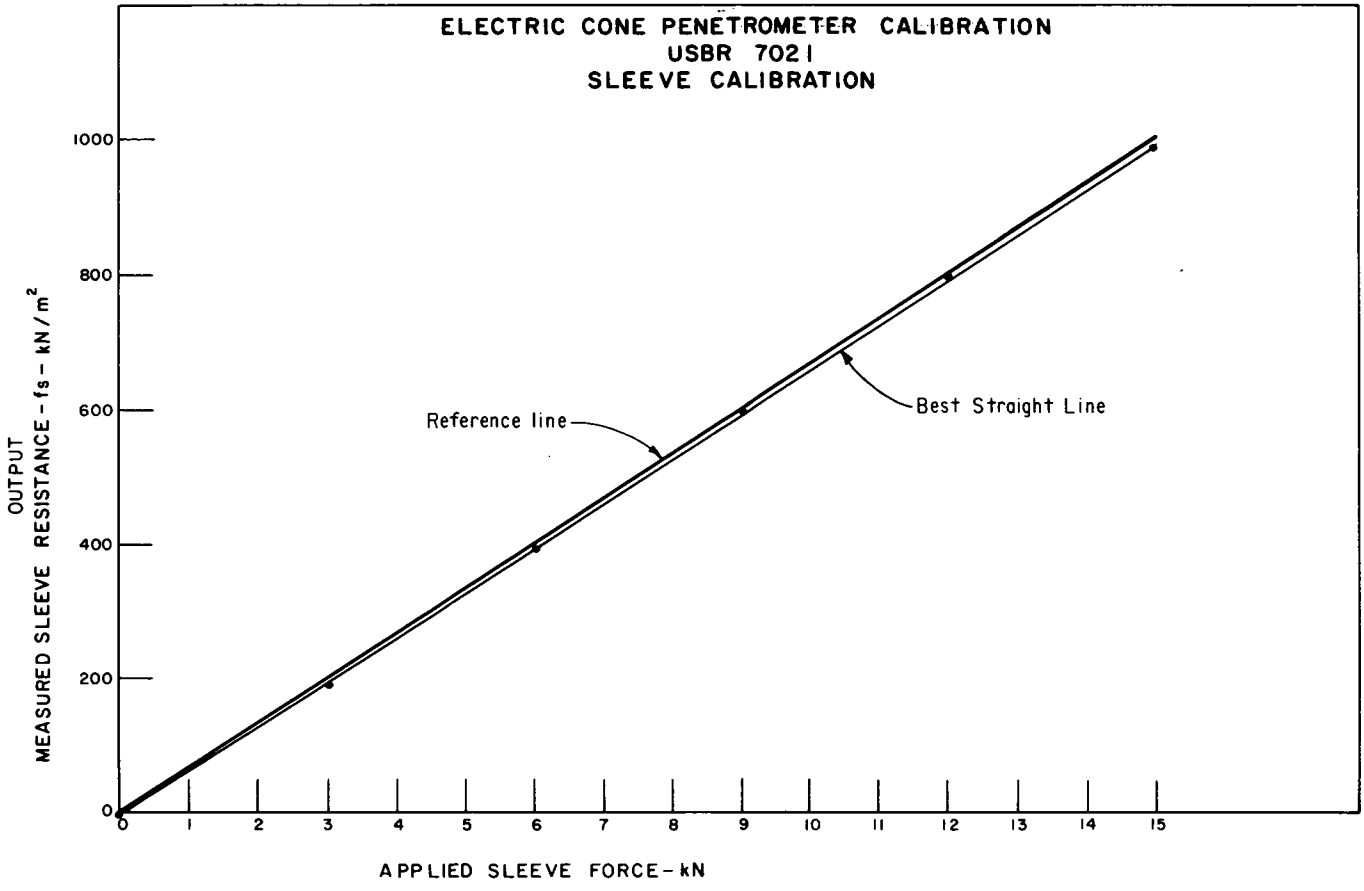

Figure A1.3. - Electric cone penetrometer sleeve calibration — example plot.

A6.2 The report must be certified by a registered professional engineer or other responsible engineer with knowledge and experience in materials testing for quality assurance. Calibration documents are retained on file by the offices responsible for performing soundings and should be updated at required intervals. For contract soundings, calibration documents should be obtained prior to contract acceptance and after testing on unaltered equipment.

A6.3 If the electric cone penetrometer meets the field calibration requirements given in paragraph 11.1.2, it is only necessary to adjust the penetrometer tip to the laboratory requirements on a yearly basis. Electric cone penetrometers should be calibrated using laboratory procedures prior to use on each new project, but they do not need to meet calibration tolerances as required for newly manufactured cones.

A.7 References

[1] Schaap, L.H.J., and H. M. Zuidberg, *Mechanical and Electrical Aspects of the Electric Cone Penetrometer Tip*, Proceedings of the Second European Symposium on Penetration Testing, Amsterdam, May 24-27, 1982.

[2] Robertson, P. K., and R. G. Campanella, *Guidelines for Use and Interpretation of the Electronic Cone Penetration Test*, Soil Mechanics Series No. 69, Department of Civil Engineering, University of British Columbia, Vancouver, Canada, February 1984.

UNITED STATES DEPARTMENT OF THE INTERIOR
BUREAU OF RECLAMATION

USBR 7100-89

PROCEDURE FOR

OBTAINING UNDISTURBED BLOCK SAMPLES BY THE HAND AND CHAIN SAW METHODS

INTRODUCTION

This procedure is under the jurisdiction of the Geotechnical Services Branch, code D-3760, Research and Laboratory Services Division, Denver Office, Denver, Colorado. This procedure is issued under the fixed designation USBR 7100. The number immediately following the designation indicates the year of acceptance or the year of last revision.

1. Scope

1.1 This designation outlines the procedure for obtaining undisturbed block samples by the hand and the chain saw methods. The chain saw uses a special carbide-tipped chain.

1.2 Undisturbed block samples are obtained for special laboratory tests to determine the strength, consolidation, permeability, and other engineering or physical properties of the undisturbed soil.

1.3 This method usually involves test pit excavation and is limited to relatively shallow depths. For depths greater than about 20 to 30 feet (6 to 9 m) or depths below the water table, the cost and difficulties of excavating, cribbing, and pumping generally make block sampling impractical and uneconomical. For these conditions, use of a thin wall push tube soil sampler, a piston-type soil sampler, or Denison or Pitcher-type soil samplers may be required.

1.4 Successful sampling of granular materials requires sufficient cohesion, cementation, or apparent cohesion (due to capillarity) of the soil for it to be isolated in a column shape without undergoing excessive deformations. Additionally, care must be exercised in the excavation, preservation, and transportation of undisturbed granular samples.

2. Auxiliary Tests

2.1 Visual classification of soil materials in the block sample is required in accordance with USBR 5005 as part of performing this procedure.

2.2 The in-place dry unit weight of the soil adjacent to the block sample may be required; whereupon, it should be obtained in accordance with USBR 7205 or 7206.

3. Applicable Documents

3.1 *USBR Procedures*:

USBR 5005 Determining Unified Soil Classification (Visual Method)

USBR 7205 Determining Unit Weight of Soils In-Place by the Sand Cone Method

USBR 7206 Determining Unit Weight of Soils In-Place by the Rubber Balloon Method

4. Summary of Method

4.1 The bottom or the side of a test pit is trimmed, using care not to disturb the soil to be sampled. A column of soil, generally square in cross section, is isolated by excavating by hand or in combination with a chain saw. After trimming to the desired size, the sample is encased in at least three layers of cheesecloth and covered with melted wax. Then the sample is cut from the original soil, and any uncovered soil is covered with layers of cheesecloth and wax. After the sample is carefully placed and packed in a sturdy box, the box is labeled and prepared for shipment to the laboratory.

5. Significance and Use

5.1 Undisturbed block samples are suitable for laboratory tests where large-sized samples of undisturbed material are required.

5.2 This method of sampling is advantageous where the soil to be sampled is near ground surface. It is the best available method for obtaining large undisturbed samples of very stiff and brittle soils, partially cemented soils, and some soils containing coarse gravel and cobbles.

5.3 Excavating a column of soil may relieve stresses in the soil and may result in some expansion of the soil and a corresponding decrease in its unit weight. Usually the expansion is small in magnitude because of the shallow depth.

5.4 The chain saw has proved advantageous in sampling difficult soils which are blocky, slickensided, or gravelly, or materials containing alternating layers of hard and soft material [1].[1]

6. Apparatus

6.1 Excavating and trimming tools as required, including backhoe, pick, shovel, chain saw, trowel, large and small knives, hacksaw blades, and thin piano wire or multiwrap wire.

6.2 The chain for the chain saw is of standard design except that carbide tips are brazed to the cutting teeth (fig. 1).

[1] Number in brackets refers to the reference.

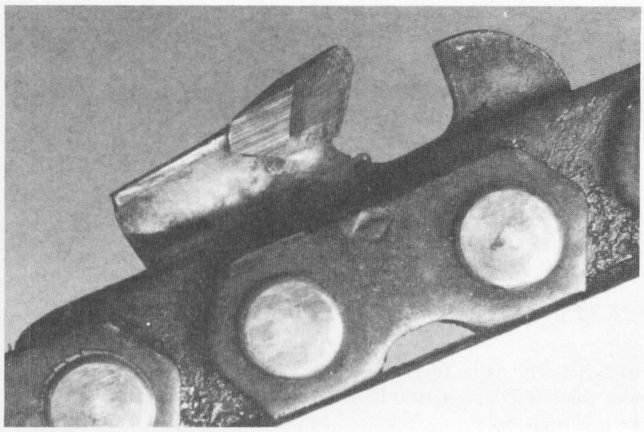

Figure 1. – Carbide-tipped cutting tooth on chain.

6.3 Cheesecloth or similar cloth wrapping material.

6.4 Sealing wax, paintbrush, and melting stove or heater. Use a sealing wax that does not shrink appreciably, does not permit evaporation from the sample, and which does not exhibit brittle characteristics. Microcrystalline waxes are preferable to paraffin.

6.5 Shipping containers, packing materials, labels, data forms, and other necessary supplies. Packing material may be Styrofoam, sawdust, or similar material.

6.6 Fuel for the wax-melting stove or heater, fuel, and lubricating oil for the chain saw.

7. Precautions

7.1 *Safety Precautions*:

7.1.1 This designation may involve hazardous material, operations, and equipment.

7.1.2 Before using the backhoe, inspect it for compliance with standards set forth in the *Construction Safety Standards*[2]. Predetermine locations for spoil piles, and always dump in the same direction and away from the edge of the excavation. Operate the backhoe in a careful, smooth manner.

7.1.3 Before entering a test pit or trench, inspect sidewalls and lay back the slope or install cribbing, if necessary. Remove loose overhanging material or other material that could fall into the excavation.

7.1.4 Only qualified employees are permitted to operate the chain saw, backhoe, or other heavy equipment.

7.1.5 When carried in a vehicle, the chain saw should be placed so that it cannot shift position in transit. A guard should be placed on the saw blade when not in use.

7.1.6 When hand-carrying the chain saw, the saw motor should be turned off, the blade should be pointed downward and to the rear of the person carrying the saw.

7.1.7 Inspect the chain for worn links and slack. Keep the chain well oiled. When wear becomes excessive and hinders operation of the saw, the chain should be discarded and replaced with a new one.

7.1.8 When starting the chain saw motor, the manufacturer's starting instructions should be followed. In addition, the saw should be placed on level ground and the chain taken out of gear, if the chain saw is equipped with this feature. The operator should be on solid footing and well braced, as one hand is used to hold the saw and the other hand to pull the starting cord.

7.1.9 Do not let the chain bind, as kickback could result.

7.1.10 Be aware that chain saw exhaust fumes can build up, even in an open test pit.

7.1.11 Before refueling the chain saw, shut the engine off and let it cool for about 5 minutes. Use only approved fuel containers. The saw should be started at least 10 feet away from the fueling area.

7.1.12 After using the chain saw, drain fuel and run engine until all fuel in tank has been used.

7.1.13 Those assisting in the sampling or observing should stand far away enough to avoid injury from flying debris during sawing operation.

7.1.14 Personal protective equipment consisting of a hard hat, face shield, safety glasses, hearing protection, gloves, chaps, longsleeved shirt or jacket, and safety boots must be worn by the chain saw operator.

7.1.15 Inspect wax-melting stove prior to use, and position it close to the sampling area. Do not overheat or boil the wax.

7.1.16 Hot wax may cause burns if handled improperly or carelessly. Wear gloves that will not absorb wax.

7.1.17 Use care when applying wax to the cheesecloth-wrapped sample.

7.1.18 Block samples are heavy [125 to 200 lb, (55 to 90 kg)] and awkward to handle. Two or more people should be used for lifting and handling block samples. Use proper lifting techniques to avoid back injury.

7.1.19 Keep the work area uncluttered and free of items that can cause one to stumble.

7.2 *Technical Precautions*:

7.2.1 When a face of the block sample is exposed during cutting and trimming operations, provisions must be made to prevent moisture loss from the sample. This can be accomplished by covering the face of the block sample with moist towels, plastic, or cheesecloth and wax. The latter is preferred as it not only prevents moisture loss, but also provides support for the soil sample.

7.2.2 Undisturbed block samples are taken to preserve as closely as possible the in-place density and fabric characteristics of the soil. Therefore, when handling and shipping the sample, it is important to minimize all sources of disturbance such as vibration (i.e., dropping of the soil sample); excessive temperature changes (i.e., freezing temperatures); and moisture loss.

8. Calibration and Standardization

Not applicable, reference standards are not used for this procedure.

9. Conditioning

9.1 Prevent moisture loss from the sample during sampling operations and shipment using techniques described in subparagraph 7.2.1 and 10.7.

10. Procedure

10.1 All data are to be recorded on the "Undisturbed Block Sample" form as shown on figure 2.

10.2 At the location where the block sample is to be obtained, smooth the ground surface and mark the outline of a face of the block. Samples may be obtained from the bottom or the side of a test pit as shown on figure 3.

NOTE 1.-The size of the sample depends upon its intended use. For most investigations, a cube about 1 foot (0.3 m) per side provides sufficient material and can be handled easily.

10.3 Determine and record the elevation (or depth below the ground surface) to the top of the sample.

10.4 Carefully excavate a trench around the sample to the required depth, removing a sufficient amount of material to provide space in which to work. If a backhoe is used to excavate the trench, first rough out an oversized column (pedestal) large enough such that the soil to be sampled is not disturbed by the backhoe operation.

NOTE 2.-Generally, a pedestal 3 to 4 feet on a side and 3 to 4 feet high (0.9 to 1.2 m) is adequate.

If the soil is fragile and easily broken, backhoe usage may be limited to excavation of only two or three sides of the pedestal, with the remaining side or sides excavated by chain saw and/or by hand methods.

10.5 Gradually remove excess soil on the sides of the block using the chain saw and/or hand methods until a pedestal of the desired size is obtained.

10.6 Visually classify soils in the sample in accordance with USBR 5005, and describe the in-place condition of the soil as shown on figure 2.

10.7 Cover the freshly exposed faces of the sample (pedestal) with cheesecloth and paint with melted wax. Apply additional layers of cheesecloth and wax to form a total of three (minimum) layers. Hot wax should not be poured over the sample. If the soil is fragile, apply cheesecloth and wax to individual sides as they are exposed.

10.8 Identify the sample (number, location, elevation, etc.), and mark the top of sample and the north orientation. A piece of heavy paper showing this information should be waxed to the top of the sample.

10.9 Cut or shear the base of the sample from the original (parent) soil, using a thin piano wire or multiwrap wire in clayey soils, or the chain saw, shovels, and knives in other types of soil.

If the soil is disturbed easily, a sturdy wooden box with both ends removed should be placed over the sample. Fill the space between the sample and the box with packing material and attach the top to the box prior to cutting the base of the sample.

10.10 Carefully tilt the sample on one side and cover the exposed bottom face with at least three layers of cheesecloth and wax as described in subparagraph 10.7.

10.11 Build a sturdy, wooden shipping box around the sample, if not already done in subparagraph 10.9. Fill the space between the sample and the box with packing material. Enclose a copy of the "Undisturbed Block Sample" form (fig. 2) with the sample.

10.12 Mark and address the outside of the shipping box as follows:

Fragile
Do not freeze or drop
This side up (arrow pointing in right direction)

Regardless of the method of shipment, samples should be sent to the Denver Federal Center addressed:

Geotechnical Services Branch, D-3760
Building 56, Entrance W-13
Bureau of Reclamation
P O Box 25007
Denver CO 80225

11. Calculations

Calculations are not required.

12. Report

12.1 The report is to consist of a completed "Undisturbed Block Sample" form (fig. 2).

13. References

[1] Tiedemann, D. A., "Undisturbed Block Sampling Using a Chain Saw," Bureau of Reclamation Report No. GR-83-8, 19 pp., Denver, Colorado, December 1983.

[2] *Construction Safety Standards*, Bureau of Reclamation, Denver, Colorado, 510 pp., reprint 1987.

7-2408 (12-86)
Bureau of Reclamation

UNDISTURBED BLOCK SAMPLE

Designation USBR 7100 - 89

SAMPLE NO.	PROJECT	FEATURE
Block No. 1 downstream	Example	Example
TEST PIT	**LOCATION**	**DEPTH/ELEVATION** m (ft)
81-5	Sta. 145+13, 606' Rt. (D/S)	333
SAMPLED BY DATE	**CHECKED BY** DATE	

LOCATION DRAWING

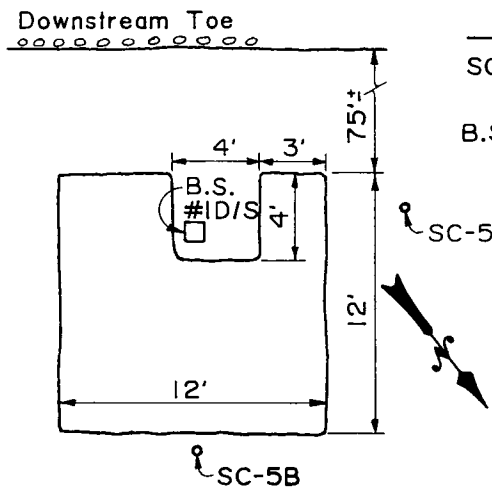

SAMPLE DRAWING

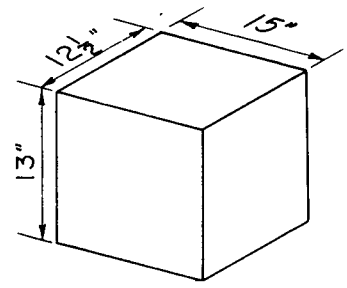

Sample visual classification FAT CLAY : About 95% fines with high plasticity, high dry strength, high toughness; about 5% fine sand; maximum size, fine sand.

IN-PLACE CONDITION: Firm, fissured and slickensided; moist; reddish; mottled brown.

Remarks Two sand cone density tests , SC-5A and SC-5B were taken as shown on location drawing above. Two sack samples, labeled TP-81-5, were taken in the test pit.

Figure 2. - Undisturbed block sample — example.

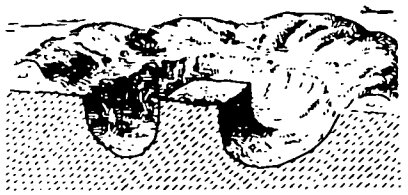

1. Smooth ground surface and mark outline of sample.
2. Carefully excavate trench around sample.

3. Deepen excavation and trim sides of sample to desired size with knife.

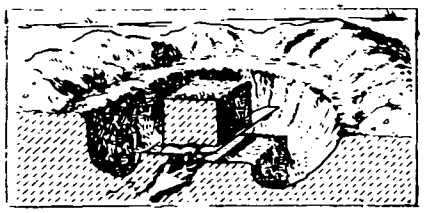

4. Cut sample from parent stratum, or encase sample in box before cutting if sample is easily disturbed.

(a)

1. Carefully smooth face surface and mark outline of sample.

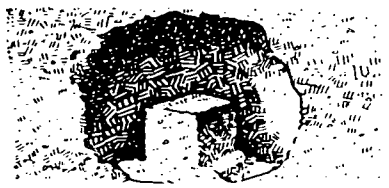

2. Carefully excavate around and in back of sample. Shape sample roughly with knife.

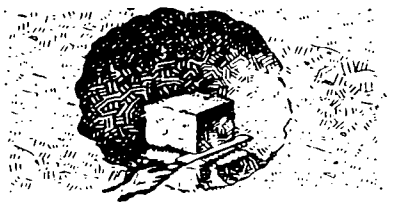

3. Cut sample and carefully remove from hole, or encase sample in box before cutting if sample is easily disturbed.

(b)

Figure 3. - Initial steps to obtain a hand-cut, undisturbed block sample from (a) bottom of test pit or level surface and from (b) cutbank or side of test pit.

UNITED STATES DEPARTMENT OF THE INTERIOR
BUREAU OF RECLAMATION

USBR 7105-89

PROCEDURE FOR

PERFORMING UNDISTURBED SOIL SAMPLING BY MECHANICAL DRILLING METHODS

INTRODUCTION

These practices are under the jurisdiction of the Geotechnical Services Branch, code D-3760, Research and Laboratory Services Division, Denver Office, Denver, Colorado. These practices are issued under the fixed designation USBR 7105. The number immediately following the designation indicates the year of acceptance or the year of last revision.

1. Scope

1.1 This designation outlines practices and equipment for performing undisturbed soil sampling by mechanical drilling methods.

1.2 Undisturbed samplers are divided into categories:

- Thinwall open-drive or push tube soil samplers,
- Fixed-piston soil samplers, and
- Double-tube soil samplers.

1.3 These practices focus on:

a. Operation of the samplers.
b. Procedures and techniques used for in-place moisture content and unit weight determinations.
c. Handling and shipping of undisturbed soil samples.

2. Applicable Documents

2.1 *USBR Procedures*:
USBR 1000 Standards for Linear Measurement Devices
USBR 1012 Calibrating Balances or Scales
USBR 3900 Standard Definitions of Terms and Symbols Relating to Soil Mechanics
USBR 5005 Determining Unified Soil Classification (Visual Method)
USBR 5300 Determining Moisture Content of Soil and Rock by the Oven Method
USBR 5891 Determining Coarse-Grained Portion of a Slurry by the Sand Content Test Method
USBR 5892 Determining Slurry Unit Weight by the Mud Balance Test Method
USBR 5893 Determining Slurry Filtration Characteristics by the Filter Press Test Method
USBR 5894 Determining Slurry Viscosity by the Marsh Funnel Test Method
USBR 5895 Determining Slurry Viscosity by the Viscometer Test Method

2.2 *ASTM Standard*:
D1587 Standard Practice for Thin-Walled Tube Sampling of Soils.

3. Summary of Method

3.1 A relatively undisturbed soil sample can be obtained by mechanical drilling methods. A variety of samplers and sampling equipment is available. Sampling practices, procedures, and samplers are outlined in detail in paragraph 11.

4. Significance and Use

4.1 These practices and procedures are used when it is necessary to obtain a relatively undisturbed sample suitable for laboratory tests where the results might be affected by soil disturbance.

4.2 Undisturbed soil samples for in-place moisture—unit weight determinations and laboratory testing are a vital part of most subsurface investigation programs. Information gathered from field and laboratory testing of undisturbed soil samples provides the basis for many engineering design considerations.

4.3 Field procedures currently used to obtain in-place data have generally provided reliable soil samples and supporting data. However, variations in procedures among persons performing them have occasionally presented problems due to lack of uniformity and standardization.

4.4 To standardize field practices and procedures and to enhance reliability of data obtained, procedures for various types of undisturbed sampling are outlined in this practice. These procedures should be used when in-place moisture content and dry unit weight determinations and field or laboratory testing are required on undisturbed samples.

5. Terminology

5.1 Definitions are in accordance with USBR 3900.

5.2 Terms not included in USBR 3900 specific to this designation are:

5.2.1 *Bit Clearance Ratio.*–A ratio, expressed as a percentage, of the difference between the inside diameter of the sampling tube and the inside diameter of the cutting bit divided by the inside diameter of the sampling tube.

5.2.2 *Drilling Mud.*–Drilling/circulating fluid, the viscosity of which aids lifting of cuttings and the density of which aids hole stability.

5.2.3 *Percent Recovery.*–A percentage which indicates the success of sample retrieval, calculated by dividing the sample recovery length by the length of advance of the sampler.

5.2.4 *Recovery Length.*–The length of sample actually retrieved during the sampling operation.

5.2.5 *Slough.*–Disturbed material left in the bottom of a borehole, usually from falling off the side of the borehole or falling out of the sampler or off the auger.

5.2.6 *Viscosity.*–The property of a fluid or semifluid that enables it to develop and maintain an amount of shearing stress dependent upon velocity of flow and then to offer continued resistance to flow.

6. Apparatus

6.1 Any drilling equipment may be used that provides a reasonably clean hole of adequate size to permit insertion of the particular sampler desired. This equipment must be such that disturbance does not occur to the interval to be sampled. A drill rig provides for mechanical preboring as well as operating the samplers. Rigs may be mounted on trucks, trailers, or skids, as required. For some of the samplers, a rotation mechanism is necessary.

It is desirable to rotate all samplers to break off the soil core at the bottom end of the sampler. The drill rig requires controlled rotation, feed pressure, and feed rate.

6.2 Typical samplers used for undisturbed soil sampling are shown on figure 1. Sampler selection depends on type of sample required, subsurface conditions, and type of soil to be sampled. Sampler types and operation are discussed in paragraph 11.

6.3 Drill rods to fit, and safely support, the sampler and of sufficient quantity to reach desired depths.

6.4 Miscellaneous excavating and trimming tools are required along with sealing supplies such as cheesecloth and wax when applicable. Circular wooden blocks (prewaxed) or expanding packers which fit into the ends of sampling tubes are used to support the samples in the containers during shipment. An expanding packer consists of two disks, metal or plastic, separated by a thick rubber washer or O-ring and fastened together with a bolt and wingnut. Tightening the wingnut compresses the rubber and forces it against the wall of the sampling tube to seal the sample and provide a moistureproof seal without waxing.

6.5 Heating stove or torch for melting wax and brush to apply wax.

6.6 A truck or trailer-mounted water tank with pump, to haul drilling fluid; air compressor if air drilling is to be performed.

6.7 Bentonite or other suitable stabilizing materials to add to drilling fluid, when required.

6.8 Casing when required.

6.9 Balances or scales of sufficient capacity and sensitivity if unit weight determinations are required in the field. Balance or scale should meet the requirements of USBR 1012 and be placed on a steady base.

6.10 Measuring tapes or rulers meeting the requirements of USBR 1000 for measuring samples, sample tubes, and for determining sampling depth and length of drive.

6.11 Assorted tools, such as pipe wrenches of various sizes and typical service tools required for a drill rig operation.

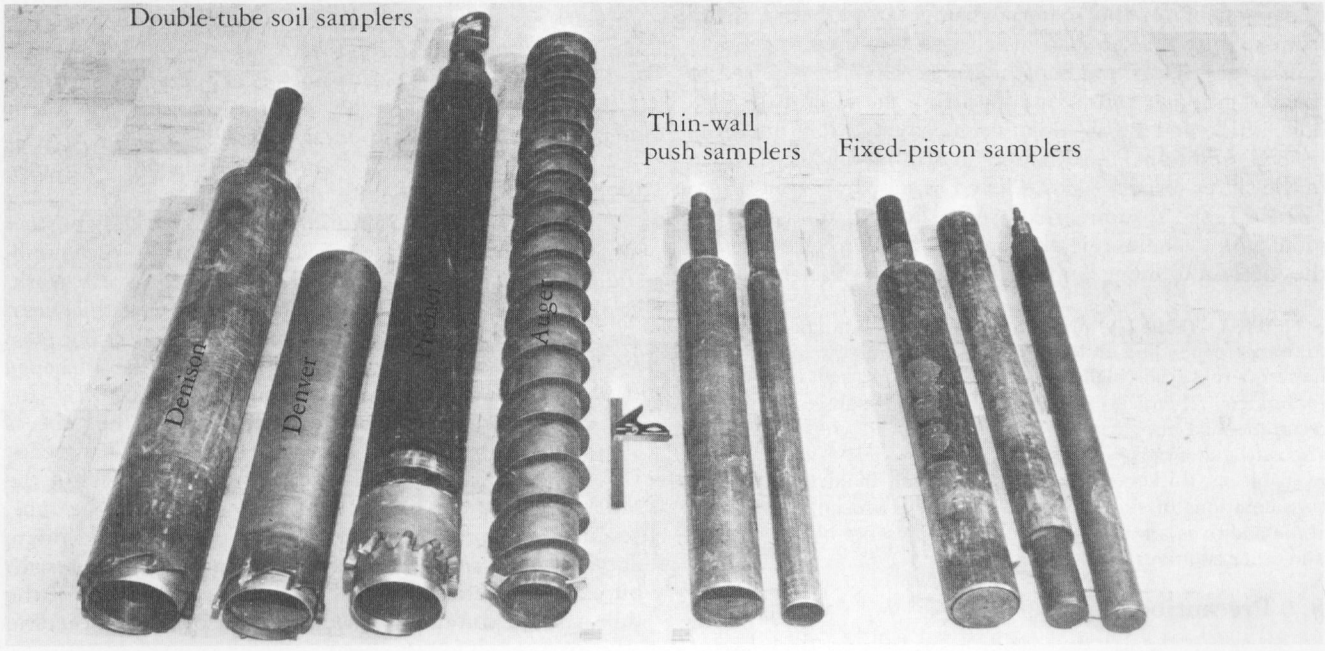

Figure 1. – Examples of undisturbed soil samplers.

6.12 Sample tubes as required for specific sampler used.
6.13 Shipping containers sized to hold sample tubes.

7. Reagents and Materials

7.1 Use of drilling fluid, commonly called drilling mud, is an important technique in mechanical sampling. This material is used to assist cutting operation of the sampler, lift cuttings from the hole by circulation, support the sidewalls of the hole to prevent caving and eliminate casing, and to assist in holding the sample in the sampler as it is being removed. The basic features which govern suitability of drilling mud for these various uses are viscosity, and specific gravity or unit weight.

7.2 Material normally used as drilling mud is a high-swelling bentonite (sodium montmorillonite) and water mixture.

7.2.1 There are available on the market, chemical products (additives) for adjusting the viscosity, either by thinning or thickening the fluid, to provide a stabilized filter cake on the walls of the drill hole and to provide support and prevent loss of fluid. Relatively small quantities, a few ounces per barrel of water, of the additives often result in advantageous changes in the properties of drilling mud. Use of drilling mud or chemical additives has been successful in most applications.

7.2.2 There may be occasions when a heavy unit weight mud is needed to support the hole. This is sometimes obtained by adding a barium compound, usually barite (barium sulphate), which is a heavy inert chemical that increases unit weight without affecting consistency or serviceability of the mud.

7.3 The bentonite-water-additive mixture should be sufficiently thick so that it does not penetrate into the soil sample during the cutting operation. This consistency is dependent on the material being sampled and varies from slightly thicker than water to a very thick, creamlike consistency. Thick muds of high viscosity are required in coarser, granular soils. For supporting the wall of the drill hole, thick and heavy unit weight muds are sometimes needed. Additional information on drilling mud is provided in the slurry test procedures listed in subparagraph 2.1.

7.4 Table 1 summarizes some drilling mud requirements. As a general rule, the thinnest mud mixture meeting the job requirement is most practical and efficient to use.

NOTE 1.–Table 1 is presented only as a guide and is subject to change depending on local conditions and quality of bentonite. Experimental trial finally governs the mixture required. Use of commercial chemical additives can be advantageous and is recommended for making quick changes in consistency and viscosity and improving usability of mud. These additives are available as thickeners, thinners, and wall builders. However, considerations of soil and water conditions are important since some additives are not effective in the presence of salt or lime, and other additives may be required.

8. Precautions

Precautions specific to each sampler are discussed in paragraph 11.

8.1 *Safety Procedures*:

8.1.1 Undisturbed sampling usually involves use of a drill rig; therefore, safety requirements as outlined in the Bureau's *Driller's Safety Manual* [1][1] and *Construction Safety Standards* [2] must be observed.

8.1.2 Hard hats and steel-toed safety shoes should be worn at all times near an undisturbed sampling operation and other personal protective equipment such as leather gloves, goggles, hearing protection, etc. should be utilized as appropriate.

9. Calibration and Standardization

9.1 Standard operational procedures for specific samplers are detailed in paragraph 11.

10. Conditioning

10.1 Not applicable, special conditioning requirements are not needed for this designation.

11. Procedure

In this designation, undisturbed sampling of soil is divided into three main categories by sampler type (1) thin-wall push tube samplers, (2) fixed-piston samplers, and (3) double-tube samplers.

11.1 *Thin-Wall Push Tube Samplers*:

11.1.1 *General Requirements*:

11.1.1.1 A typical thin-wall push tube sampler is shown on figure 2. Details of this sampler and principles of operation are shown on figures 2 and 3, respectively.

11.1.1.2 Normally, these samplers are 3- or 5-inch o.d. (outside diameter) and are suitable for sampling soils having some cohesion. Soils which cannot be sampled with this device include soils which are hard, cemented, or too gravelly for sampler penetration, or so soft or wet the sample will not stay in the tube.

11.1.1.3 The basic principle of operation is to force a thin-wall cylindrical tube into the undisturbed soil in one continuous push without rotation.

11.1.2 *Sampler.*–The sampler consists of a sampler head to which the sampling tube is connected.

11.1.2.1 The sampling tube is cold-drawn steel tubing and may be of variable length, but is commonly stainless steel furnished in 36-inch lengths for USBR work. Quality of the sample depends mainly on wall thickness, with the thinnest wall possible providing the best samples. Wall thickness of the tube should generally be 14 gauge (0.083 in) for 3-inch o.d. tubes and 11 gauge (0.120 in) for 5-inch o.d. tubes. The cutting edge of the tube is sharpened so the bevel is on the outside; the cutting edge is referred to as the bit. The i.d. (inside diameter) of the bit is equal to or slightly less than the i.d. of the tube, resulting in an inside clearance (bit clearance) to facilitate entry of the sample into the tube. Sampling tubes with bit clearance ratios of 0, 1/2, 1, and 1-1/2 percent of the tube i.d. are commonly used; and the bit clearance ratio

[1] Number in brackets refers to the reference.

Table 1. – Approximate proportions of drilling mud mixtures.

Purpose of drilling mud	Approximate proportions of material per barrel of water	Viscosity*	Descriptive consistency
Assisting cutting operation by sampler	10 to 30 lbm of bentonite	Variable as needed	Variable as needed
For lifting cuttings from hole	10 to 15 lbm of bentonite for for fine-grained soils	Slightly higher than water	Thin cream
	30 lbm of bentonite for coarse-grained soils	About *1.3 times the viscosity of water	Very thick cream
For supporting the drill hole	30 lbm of bentonite and chemical additives as wall stabilizers, used as directed by the manufacturer. When barite is used about 5 lbm is recommended	About *1.3 times the viscosity of water	Very thick cream
For assisting to hold the sample in the sampler	10 to 30 lbm of bentonite Chemical additives as used above maybe advantageous for this purpose. When barite is used, the amount required may vary from 0 to 10 lbm	Slightly higher than water to *1.3 times the viscosity of water	Thin cream to very thick cream

* Viscosity was measured by a Marsh funnel which is calibrated with water at 72 °F. The time required for a given amount of water to flow through the funnel is considered as 1.0. The value listed above is the relative time for the same amount of mud mixture to flow through the funnel.

selected is that necessary to minimize drag on the inside of the tube and still retain the sample in the tube (see fig. 4). Cohesive soils and soils which are slightly expansive require larger bit clearance ratios while soils with little or no cohesion require little or no bit clearance. It is important that each tube inventory include tubes of various bit clearance ratios so a tube with proper bit clearance is available for each of the soil types encountered.

11.1.2.2 Sampling tubes should be clean and free of all surface irregularities including projecting weld seams.

11.1.2.3 Sampling tubes must have a protective coating as corrosion can quickly damage or destroy both the uncoated thin-walled tube and the sample. Severity of damage is a function of time as well as interaction between the sample and the tube. The type of coating may vary depending on the material to be sampled. Coatings may vary from a light coat of oil, lacquer, epoxy, Teflon, and other coatings to plating of the tubes. Alternate base metals for the tubes may be considered for special cases.

11.1.2.4 The sampler head couples the thin-walled tube to the insertion equipment and, together with the thin-walled tube, comprises the thin-wall push tube sampler. The sampler head fits the 3-inch o.d. sampling tube, and by use of an adapter ring also fits the 5-inch o.d. tube (5-inch sampler heads are available also). The sampler head must have vents to allow air or drilling fluid to escape as the sampler is advanced. The vents should be equipped with a ball check valve to prevent entrance of drilling fluid during withdrawal and to create a partial vacuum that aids in sample recovery. Attachment of the sampler head to the tube must be concentric and coaxial to ensure uniform application of force to the tube by the sampler insertion equipment.

11.1.2.5 The 3-inch push tube is attached to the sampler head with four 5/16-inch diameter by 3/8-inch long socket-head cap screws.

11.1.2.6 The 5-inch-diameter push tube is attached to the sampler adaptor ring or 5-inch head with four 1/2-by 1/2-inch socket head cap screws.

11.1.3 *Basic Operation of the Thin-Wall Push Tube Sampler*:

11.1.3.1 An adequate quantity of tubes, packers, moisture content sample containers, data forms, and shipping boxes should be available at the site. The tube number, mass, length, inside diameter, and bit diameter of each thin wall push tube should be determined and recorded prior to use. Length and diameter measurements should be the average of three readings equally spaced around the tube. The bit clearance ratio should be computed and recorded for each tube prior to use. Determine and record the mass of each expanding packer or plug prior to use. All mass measurement should be performed on the same balance or scale.

11.1.3.2 The sampling tube and sampler head must be smooth and thoroughly clean inside and out before sampling and must be in proper working condition. The

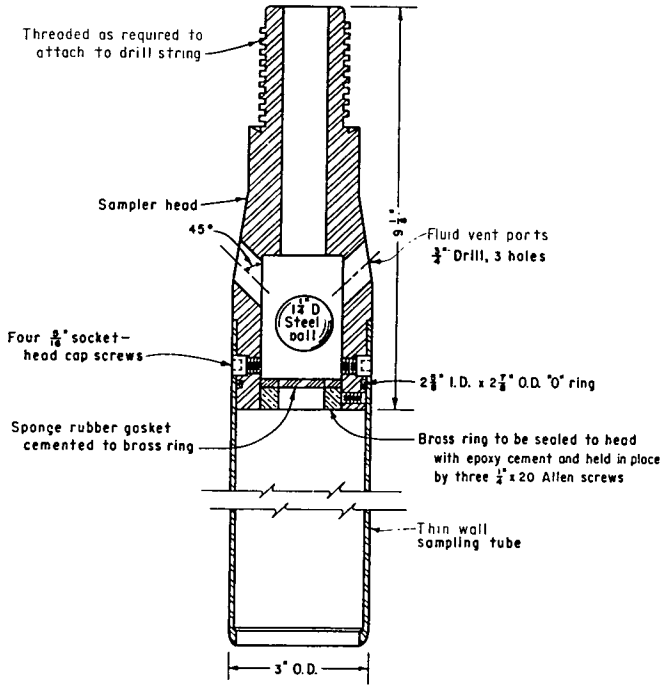

Figure 2. – Thin-wall push tube sampler.

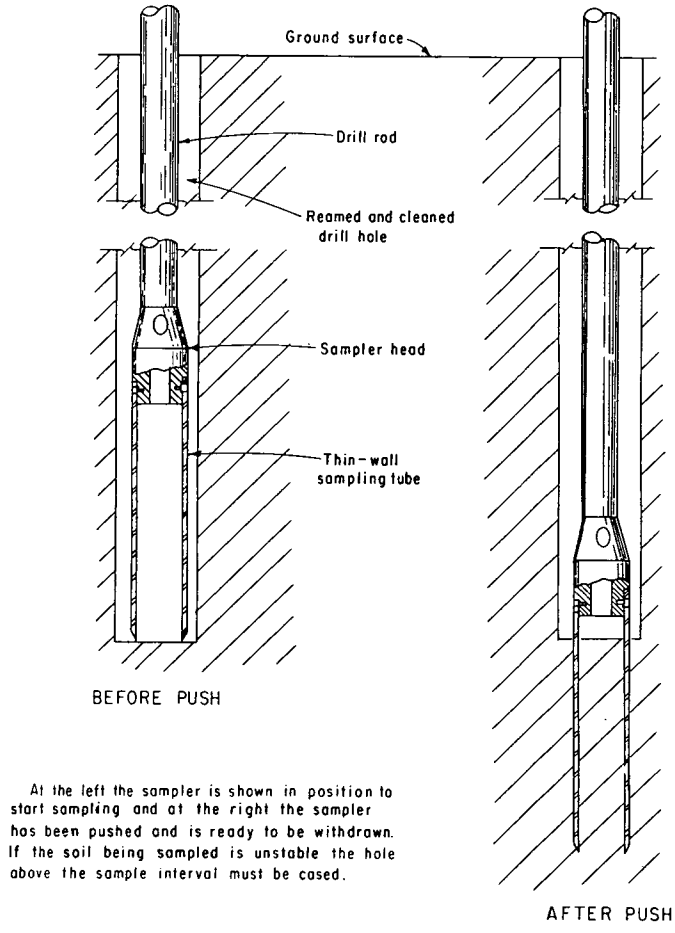

Figure 3. – Sampling with thin-wall push tube sampler.

tube bit edge must be sharp and have the proper bit clearance ratio for the soil being sampled. The sampler head should be inspected after each push to make sure the ball check is clean, free moving, and functioning properly.

11.1.3.3 The borehole must be thoroughly cleaned to the proper depth prior to sampling as loose material in the bottom of the hole will be picked up by the sampler.

11.1.3.4 If ground water is encountered in the borehole, maintain the level of drilling fluid in the borehole at or above ground-water level during the sampling operation.

11.1.3.5 Bottom discharge rotary bits are not acceptable for advancing the borehole. Side discharge bits may be used with caution. Jetting through an open tube sampler to clean out the borehole to sampling depth is not permitted. Remove loose material from the hole as carefully as possible to avoid disturbing the material to be sampled.

11.1.3.6 Assemble the sampler, attach the sampler to the drill rod and lower the sampler to the bottom of the clean borehole. Record the depth to the bottom of the hole. The desired length of push should be marked on the drill rod and a reference point established. The length of push should always be a few inches shorter than the length of push tube available for the sample to ensure that the sample is not compressed in the push tube. Table 2 provides general recommendations for length of push and bit clearance ratios for various soil types.

11.1.3.7 When advancing the sampler, note maximum hydraulic feed pressure or any variation in pressure which would indicate soft, firm, or gravelly zones.

11.1.3.8 After advancing the sampler the desired length, rotate the sampler at least two revolutions to shear off the soil at the bottom of the tube.

11.1.3.9 Withdraw the sampler from the borehole as carefully as possible to minimize disturbance of the sample.

11.1.3.10 After the sampler is removed from the borehole, remove the sample tube from the sampler head and measure the recovered length of sample. Compare the recovered sample length to the length of push to determine the amount of slough or if consolidation occurred during sampling. Calculate percent recovery and record as shown on figure 5, "Undisturbed Soil Sampling Data" form..

NOTE 2.–Recovery length does not include slough material from the bottom of the hole (top of sample). Recovery length is based on the depth of cleanout compared to the depth penetrated.

11.1.3.11 Trim approximately 2-inches of material from the bottom end of the sample. (Trimming tools can be used to obtain a smooth even trim.) Retain the trimmings as a moisture content specimen and place in a moistureproof container while being careful not to let the soil dry out or become contaminated with drilling fluid

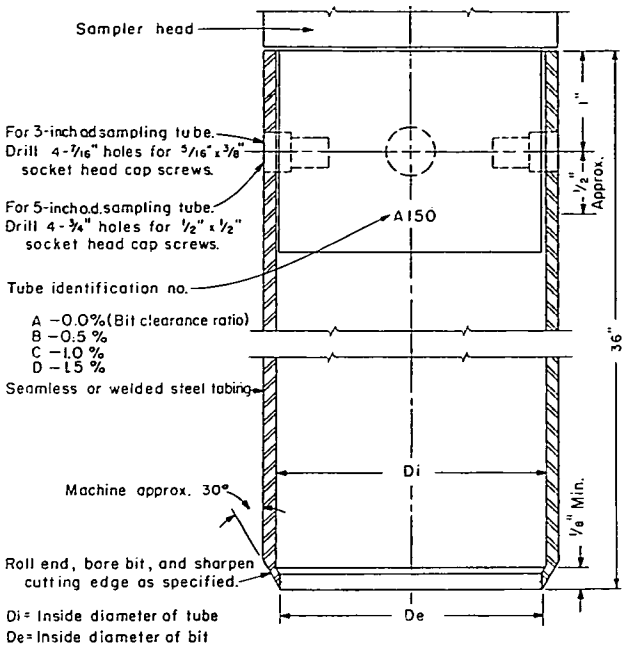

SAMPLING TUBE DIMENSIONS

OUTSIDE DIAMETER INCHES	WALL THICKNESS BWG	WALL THICKNESS IN.	Di INCHES	De	$\frac{Di - De}{Di} \times 100$ BIT CLEARANCE RATIO %
3	14	0.083	2.834	2.834	0.0
				2.820	0.5
				2.806	1.0
				2.791	1.5
5	11	0.120	4.760	4.760	0.0
				4.736	0.5
				4.712	1.0
				4.689	1.5

Normal length 36 inches unless otherwise specified.

Figure 4. – Thin-wall open push tube sampling tubes. 101-D-187

or other contaminants that could affect the in-place moisture content.

11.1.3.12 Visually classify the trimmed soil in accordance with USBR 5005.

11.1.3.13 Measure and record the distance from the bottom of the push tube to the bottom of the trimmed sample.

11.1.3.14 Insert an expandable packer or plug of predetermined mass in the bottom end of the push tube if the sample is to be shipped or transported. Packers or plugs may be omitted if material is extruded onsite.

11.1.3.15 Trim all loose slough and disturbed material from the top end of the tube. Trim approximately 2 inches into the undisturbed sample, and retain trimmings as a moisture content specimen as in subparagraph 11.1.3.11.

NOTE 3.–It is important to remove all disturbed material from the top end of the tube because in-place unit weight is based on mass and volume of the *undisturbed trimmed* sample.

11.1.3.16 Visually classify the trimmed soil from the top of the sample in accordance with USBR 5005.

11.1.3.17 Measure and record the distance from the top of the push tube to the top of the trimmed sample.

11.1.3.18 Insert an expandable packer or plug of predetermined mass in the top end of the push tube unless the sample is to be extruded onsite.

11.1.3.19 Sum up the top and bottom trimmed in lengths determined in subparagraphs 11.1.3.13 and 11.1.3.17, and subtract this sum from the total tube length to determine the trimmed sample length.

11.1.3.20 Determine the mass of the sample tube with soil and packers or plugs if used. The sample mass is determined by subtracting the mass of the tube and packers from the total sample mass.

11.1.3.21 Undisturbed soil sampling data should be recorded as shown on figure 5. A completed copy of this form should always accompany samples sent to the Bureau's Geotechnical Services Laboratory.

11.1.4 *Precautions and Recommendations for Thin-Wall Push Tube Sampling.*–Possible causes of the conditions described in paragraphs 11.1.4.1 through 11.1.4.3 may be due to one or more of those listed.

11.1.4.1 "Poor recovery" or a "loose sample":

- Gravelly or cemented soil.
- Improper bit clearance ratio.
- Sample not completely sheared at bottom of tube. A 5-minute wait after completing push and before shearing may help.
- Ball check valve plugged.
- Soil is too soft or wet to be sampled with this type sampler.
- Drilling fluid not maintained at or above ground-water level.
- Proper care not taken when removing sampler from the borehole.
- Sufficient vacuum not developed before or during retrieval.

11.1.4.2 A sample recovery length longer than the push length:

- Borehole shavings are picked up in the tube when lowering the sampler to the bottom of the hole.
- Slough in bottom of hole (hole not properly cleaned prior to sampling).
- Expansive soils.

11.1.4.3 A sample recovery length shorter than the push length:

- Compressing the soil by exceeding the recommended push length.
- Excessive surface friction caused by push tubes that are not clean and smooth inside and outside.
- Push tubes that are too small in diameter for the material sampled.
- Improper bit clearance ratio.
- Collapsible soils or soils of low unit weight, possibly not suitable for sampling with a push tube sampler.

11.1.4.4 Sample quality may be improved by:

- Maintain sampler head in proper working condition.
- Be thoroughly familiar with sampler and drilling equipment.

7-1656 (12-86) Bureau of Reclamation	UNDISTURBED SOIL SAMPLING DATA		Designation USBR 7105 - 8 9
PROJECT: EXAMPLE	FEATURE: EXAMPLE		HOLE NO.: DH-423
GROUND ELEVATION: 6743.5		WATER TABLE ELEVATION: DRY HOLE	
LOCATION: 25' U/S OF CENTERLINE		DRILLER: J. DARNELL	
LOGGED BY / DATE	COMPUTED BY / DATE		CHECKED BY / DATE

Sample No.		4	
Sample depth interval		20.0 TO 22.0	
Sampler type		DENISON	
Sample tube No.		3	
Shoe length	in	4.0	
(1) I.D. of bit or shoe	in	5.875	
(2) Inside area of bit or shoe $[\pi (1)^2 / 4] / 144$	ft^2	0.188	
Depth to bottom of hole before push	ft	20.0	
Depth to bottom of hole after push	ft	22.0	
(3) Length of tube	ft	2.3	
(4) Length of push	ft	2.0	
(5) Length of recovered sample to top of tube	ft	0.3	
(6) Sample recovery length (3) - (5)	ft	2.0	
(7) Sample recovery [(6) / (4)] x 100	%	100	
(8) Bottom trimmed-in length	ft	0.1	
(9) Top trimmed-in length	ft	0.3	
(10) Trimmed sample length (6) - [(8) + (9)]	ft	1.6	
(11) Volume of sample (10) x (2)	ft^3	0.30	
(12) Mass of tube + plugs + wet soil	lbm	41.34	
(13) Mass of tube + plugs	lbm	3.10	
(14) Mass of wet soil (12) - (13)	lbm	38.24	
(15) Field wet density (14) / (11)	lbm/ft^3	127.5	
(16) Field wet unit weight (15) x 1*	lbf/ft^3	127.5	
(17) Laboratory Moisture Content	%	12.0	
(18) Dry unit weight [(16) / [1 + (17)] / 100]	lbf/ft^3	113.8	
Soil Classification			

Remarks

*convert from lbm to lbf

Figure 5. – Undisturbed soil sampling data — example.

Table 2. - General recommendations for thin-wall, open push-tube sampling.

Soil type	Moisture condition	Consistency	Length of push, inches	Bit clearance ratio, percent	Push tube sampler recovery	Recommendation for better recovery
Gravel			Thin-wall, open push tube samplers not suitable			
Sand	Moist	Dense	18	0 to 1/2	Fair to poor	
Sand	Moist	Loose	12	1/2	Poor	Recommend piston sampler
Sand	Saturated	Dense	18 to 24	0	Poor	Recommend piston sampler
Sand	Saturated	Loose	12 to 18	0	Poor	Recommend piston sampler
Silt	Moist	Firm	18	1/2	Fair to good	
Silt	Moist	Soft	12 to 18	1/2	Fair	
Silt	Saturated	Firm	18 to 24	0	Fair to poor	Recommend piston sampler
Silt	Saturated	Soft	12 to 18	0 to 1/2	Poor	Recommend piston sampler
Clay and shale	Dry to saturated	Hard	Thin wall, open push tube sampler not suitable			Recommend double-tube sampler
Clay	Moist	Firm	18	1/2 to 1	Good	
Clay	Moist	Soft	12 to 18	1	Fair to good	
Clay	Saturated	Firm	18 to 24	0 to 1	Good	
Clay	Saturated	Soft	18 to 24	1/2 to 1	Fair to poor	Recommend piston sampler
Clay	Wet to saturated	Expansive	18 to 44	1/2 to 1-1/2	Good	

- Do not force the sampler through hard or gravelly soils.
- Adjusting push rate to improve sample recovery in various material types
- Use care when removing the sampler from hole and when removing sample tube from sampler head.
- Refer to geologic logs of nearby drill holes or any other geologic data that would familiarize the investigator with any unusual in-place conditions.
- Completely and carefully record all data as shown on figure 5, "Undisturbed Soil Sampling Data" form. Record the condition and quality of each sample and any unusual conditions encountered.

11.2 *Fixed Piston Samplers.*–There are two basic types of fixed pistons samplers, the mechanically activated types (Hvorslev and Butters) and the hydraulically activated type (Osterberg and modified Osterberg).

The basic principle of operation of fixed-piston samplers is the same as for thin-wall push tube samplers; that is, to force a thin-wall, cylindrical tube into undisturbed soil in one continuous push without rotation. Sample tubes with little or no bit clearance are generally most desirable for use with fixed-piston samplers.

The principal use of these samplers is for taking soil samples below the ground-water table. They are particularly adapted to sampling cohesionless sands and soft, wet soils that cannot be recovered using the thin-wall push tube sampler. Although these samplers can be used for many soil conditions, they are recommended only for soils which cannot be sampled using the thin-wall push tube sampler since the fixed-piston samplers involve many working parts which complicate the sampling operation. As in the case of the thin-wall push tube sampler, the fixed-piston sampler will not successfully sample gravel, cemented soil, or soils too hard to penetrate.

The functions of the fixed piston are (a) to prevent cuttings, shavings, or slough material from entering the tube when lowered to the bottom of the borehole; and (b) to develop a vacuum that holds the sample in the tube during recovery.

Since the soil being sampled is generally below the water table, water or drilling fluid may be used during the drilling and sampling operation. When sampling cohesionless sands, suitable drilling fluid and proper mud techniques are necessary for satisfactory sample recovery.

11.2.1 *Hvorslev Fixed-Piston Sampler.*–The Hvorslev fixed-piston sampler is mechanically activated. Figure 6 shows a cutaway view of the sampler. Operation of the sampler is shown on figure 7.

11.2.1.1 The Hvorslev sampler is assembled with the piston locked flush with the bottom of the sampling tube. The sampler, attached to drill rod is lowered to the bottom of a cleaned drill hole. When the sampler contacts the bottom of the hole, piston rods are lowered through the drill rods and screwed on to the piston rod extension at the top of the sampler.

11.2.1.2 After this connection is made, continued clockwise rotation of the piston rod for five revolutions unlocks the piston. The piston rods are then secured to the drill rig mast or to a frame independent of the drill rig.

11.2.1.3 The sampler is advanced into the undisturbed soil in the same manner as described for the thin-wall push tube sampler.

11.2.1.4 At the end of the push, rotate the sampler approximately 1-1/2 rotations to shear the sample off at the bottom of the sampling tube. The piston rods are then disconnected from the sampler by further rotation in the clockwise direction, thereby unscrewing the left-hand thread just below the piston rod screw clamp. This allows the piston rods to be removed before the sampler is withdrawn.

11.2.1.5 Remove the sampler from the borehole. During withdrawal, the piston is held stationary at the top of its stroke by the split cone clamp. Extreme care

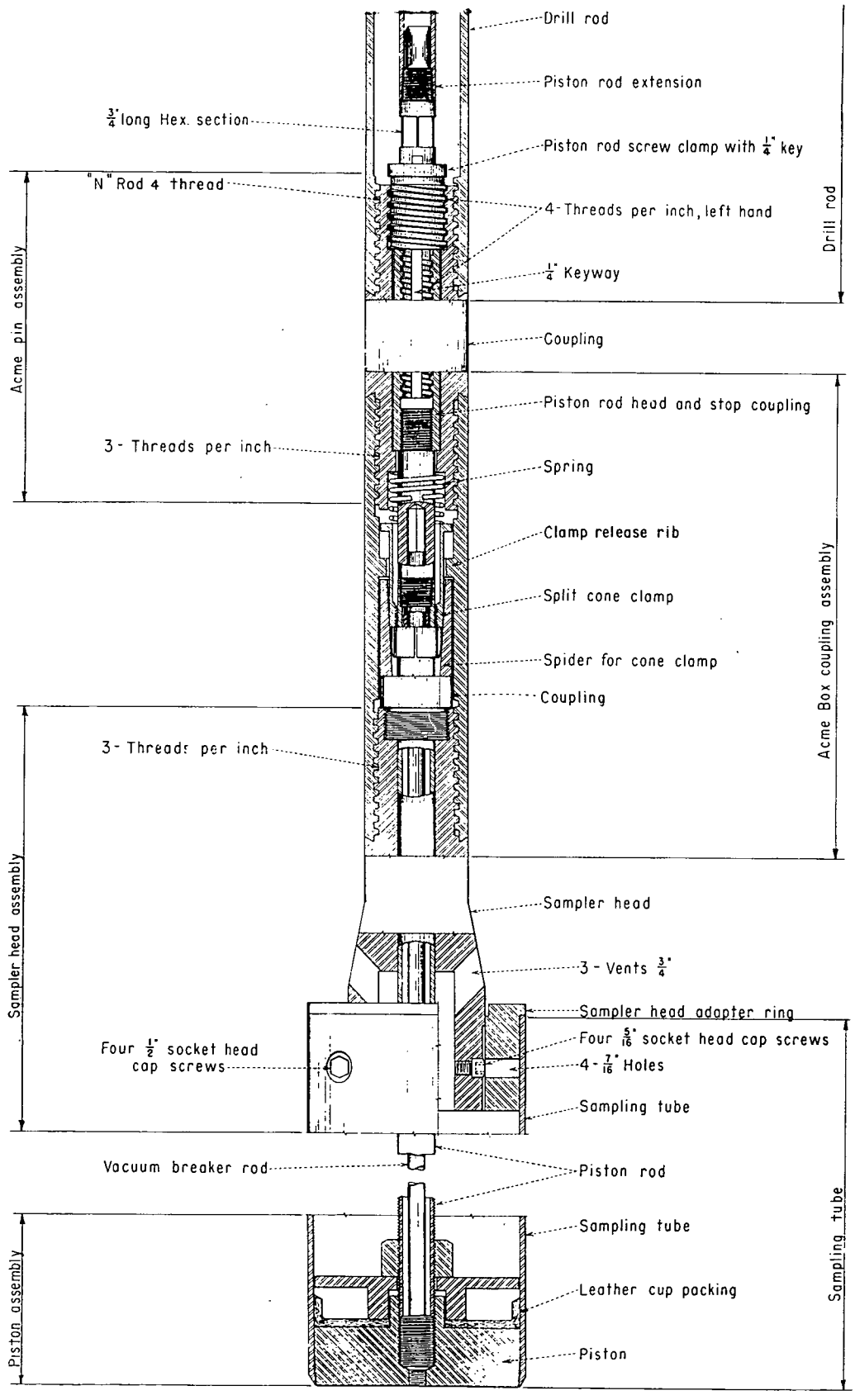

Figure 6. – Thin-wall fixed-piston sampler (Hvorslev type).

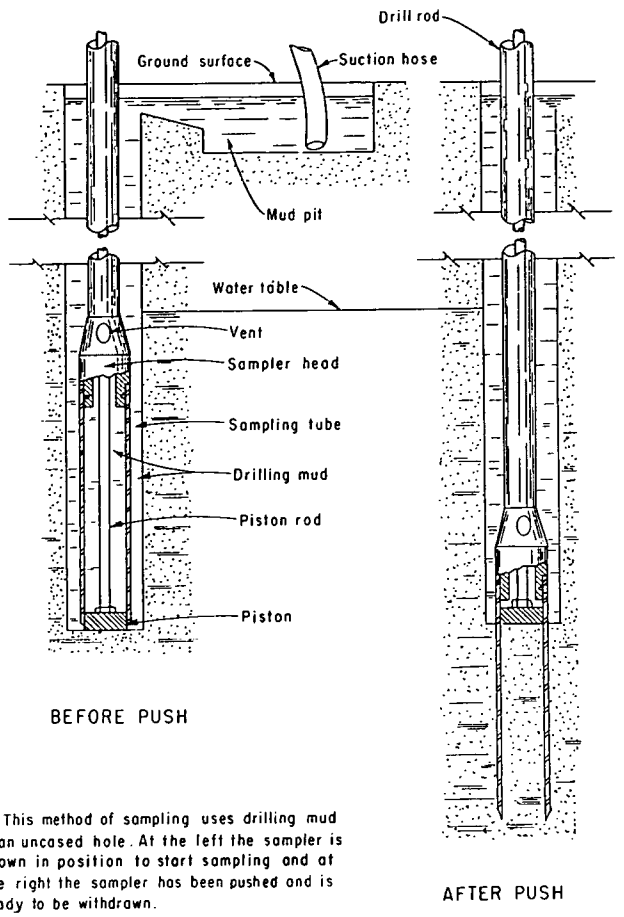

Figure 7. – Sampling with fixed-piston sampler (Hvorslev type).

must be exercised when removing the sampler from the drill hole to avoid jarring or losing the sample.

11.2.1.6 Remove the sample tube from the sampler, take in-place moisture content specimens, determine wet and dry unit weights, and record all data on the data form.

11.2.1.7 The undisturbed soil sample should be handled and shipped in the sample tube using expandable packers or waxed plugs to seal the ends, unless the soil sample is extruded onsite.

11.2.1.8 Basic rules of operation for the Hvorslev fixed-piston sampler:

11.2.1.8.1 The sampler shown on figure 6 contains many parts and screw connections which require accurately controlled counting of rotations for proper operation and locking and releasing the piston. It is good practice to assemble the sampler and check ease of rotation before lowering down the drill hole. As a general rule, the parts of the piston locking and releasing mechanism are snugly screwed together but not tightened excessively.

11.2.1.8.2 Before attempting to sample, the mechanics of the sampler—particularly the piston locking and release mechanism and split cone clamp and spring—must be thoroughly understood by the operator because the precision parts are easily damaged by misuse or incorrect assembly. It is suggested that this sampler be used only by or under the direction of an experienced operator.

11.2.1.8.3 Drilling mud plays an important part in helping to hold the sample in the sampler by hydrostatic pressure at the bottom of the sample. Also, the suction effect of the piston pulls drilling mud into the end of the sample for about 1/4 inch which tends to seal the end, thus making the piston more effective in helping to hold the sample in the sample tube. Therefore, the drilling mud consistency and unit weight must be carefully controlled based on the type of soil encountered. Drill mud should be maintained at the collar of the hole.

11.2.1.8.4 The Hvorslev sampler head is designed for 3-inch o.d. thin-wall push tubes; but, with an adapter ring assembly, the sampler is easily converted to use 5-inch o.d. thin-wall push tubes.

11.2.1.8.5 If the material sampled is susceptible to falling out of the tube, a block should be held on the bottom of the sampling tube before the tube is withdrawn clear of the mud column.

11.2.1.8.6 Usually, the soil sample is handled and shipped in the sampling tube using expanding packers to seal the ends.

11.2.1.8.7 This sampler is not prone to cutting into the side of the hole as it is lowered because the piston is locked in the down position at the bottom of the push tube as the sampler is lowered downhole. Because the piston is locked in position, it can be placed firmly against the bottom of the hole without picking up slough from the bottom of the hole.

11.2.1.9 Specific assembly and operation procedures for the Hvorslev fixed-piston sampler must be performed in the sequence listed below to ensure proper operation.

11.2.1.9.1 Disassemble the sampler and lay out the component parts. Inspect each part for wear and condition (see fig. 6 for parts indentification). The sampler may be broken down into five major components or assemblies as follows: (1) the Acme pin assembly, (2) the Acme box coupling assembly, (3) the sampler head assembly, (4) the sampling tube assembly, and (5) the piston assembly.

11.2.1.9.2 To reassemble, tighten the vacuum breaker rod inside the piston rod until it is flush with the bottom surface of the piston.

11.2.1.9.3 Place the sampler head assembly (with 5-inch o.d. tube sampler head adapter ring if used) over the piston rod.

11.2.1.9.4 Slip the sampling tube over the piston and attach the sampling tube to the sampler head, or to the 5-inch o.d. tube adapter ring if used.

NOTE 4.–Ensure that the leather cup packing on the piston has a good friction fit inside the sampling tube. If the sample tube slides over the piston too freely, the leather cups should be forced out by wrapping tape around the piston head to ensure a snug fit.

11.2.1.9.5 Screw the Acme box coupling assembly to the sampler head *making sure the short end to the clamp release rib is up.* Tighten with a wrench.

11.2.1.9.6 Slide the split cone clamp and spring over the piston rod and into the Acme box coupling assembly.

11.2.1.9.7 Attach the Acme pin assembly to the Acme box coupling assembly *making sure the left-hand thread section is up.* Leave this connection loose, about 1 inch, so that the split cone clamp will allow the piston to be moved freely.

11.2.1.9.8 Assemble the piston rod extension to the Acme pin assembly and tighten with a wrench. Left-hand threads should be up.

11.2.1.9.9 Slide the left-hand threaded keyed nut (fig. 6) over the left-hand threaded pin (fig. 6) and assemble the pin into the piston rod extension. Thread this in counterclockwise about 2 inches.

11.2.1.9.10 Push the piston down to within approximately 1/2 inch of the bottom of the sample tube. Leave approximately 1/4-inch clearance between the top of the nut and the square shoulder of the left-hand threaded pin. Turn both the pin and nut counterclockwise into the Acme pin assembly while simultaneously turning the pin, to shoulder into the Acme box coupling. During this operation, the split cone clamp will have clamped onto the piston rod and should have extended the piston flush with the bottom of the tube.

11.2.1.9.11 Tighten the Acme pin assembly with a wrench.

11.2.1.9.12 Tighten the left-hand pin and nut with a small wrench.

NOTE 5.–Do not overtighten the pin and nut — only tighten to the point that you can feel the break when it is turned clockwise.

11.2.1.9.13 Assemble the adaptor coupling to the Acme pin and tighten with a wrench.

11.2.1.9.14 The sampler is now assembled and ready to be lowered to the bottom of a cleaned out borehole.

11.2.1.9.15 Add enough drill rod to set the sampler on the bottom of the hole. Bring the last length of drill rod through the drill rig chuck assembly.

11.2.1.9.16 Add the piston rods in 10-foot sections through the drill rods.

NOTE 6.–Subparagraphs 11.2.1.9.16 through 11.2.1.9.23 must be followed very carefully; otherwise, the sampler will not function properly and serious damage could result.

NOTE 7.–The first piston rod must be the box-to-box extension that has coarse female threads on one end and fine female threads on the other end. *Coarse thread end goes down first.* Wrench tighten each piston rod section.

11.2.1.9.17 When the coarse threaded piston rod adaptor sub comes in contact with the piston rod extension at the top of the sampler, the piston rods should be raised and lowered carefully until the box end slides over the stub pin of the piston rod extension at the top of the sampler.

11.2.1.9.18 Turn the piston rod string in the clockwise direction until tight.

11.2.1.9.19 Place a chalkmark on the piston rods at a fixed elevation for a reference mark (a chalkmark parallel to the top of the drill rod string is usually used).

11.2.1.9.20 Turn the piston rod string farther in the clockwise direction until a *definite snap is felt,* indicating that the left-hand nut connection has been disengaged.

11.2.1.9.21 After the snap is felt, continue to turn the piston rods exactly five revolutions in the clockwise direction. The chalkmark will rise as the piston rods are rotated, indicating that the left-hand threaded piston rod screw clamp is being unthreaded.

11.2.1.9.22 Attach a hoisting plug to the top piston rod and chain directly over the plug to the drill rig mast with a turnbuckle used between the chain and the hoisting plug.

11.2.1.9.23 Tighten the turnbuckle until the piston rod moves slightly upward, indicating that the piston is free, while still solidly attached to the drill rig mast.

11.2.1.9.24 Tighten the chuck on the drill rods, and advance (push) the sampler into the undisturbed soil. The sampler is advanced in the same manner as described for the thin-wall push tube sampler.

11.2.1.9.25 After advancing the sampler, clamp a vise grip plier on the piston rod at the top of the drill rod string to prevent the piston rod from sliding down.

11.2.1.9.26 Measure and record the distance between the original reference mark and the vise grip. This distance is the push length.

11.2.1.9.27 Release tension on turnbuckle. Split cone clamp should prevent the piston rod from slipping down with the vise grip serving as a backup.

11.2.1.9.28 If the material is cohesive, it is advisable to rotate the sampler to shear the sample off at the bottom of the sampling tube.

11.2.1.9.29 Under most conditions, it is advisable to remove the piston rods before lifting the sampler out of the sampled zone. This should allow sufficient time for friction and adhesion to develop between the sample and sampling tube which will aid in retaining the sample in the sampling tube.

11.2.1.9.30 Remove the piston rods by continued turning in the clockwise direction until the left-hand threaded pin is separated from the top of the sampler. Remove piston rods in 10-foot sections to avoid bending the rods.

NOTE 8.–The last short section of piston rod will have the left-hand threaded pin. Remove the pin for assembly on the next sampling attempt.

11.2.1.9.31 Carefully remove the drill rods and sampler making sure to maintain the drill hole full of drilling mud.

NOTE 9.–The special coupling (three-thread Acme box to four-thread N box) will contain the loosened left-hand threaded nut. This assembly should not be removed until the sampler is completely removed from the hole because it is easy to forget it or lose it down hole.

11.2.1.9.32 Refer to in-place dry unit weight procedures for further details on removing and handling the undisturbed sample.

11.2.1.9.33 After each sampling attempt, the sampler should be disassembled and thoroughly washed, cleaned, and lubricated.

11.2.1.10 The following are precautions and recommendations for the Hvorslev fixed-piston sampler.

11.2.1.10.1 The condition of poor recovery or a loose sample may occasionally occur. Possible causes may be one or more of the following:

- Improper bit clearance ratio (0.0-percent bit clearance ratio should generally be used).
- Sample not sheared completely at bottom.
- Piston malfunction (split cone clamp may not be working properly).
- Insufficient vacuum developed during the push (piston leather cup packing should be forced out and cleaned or replaced).
- Proper care was not used when removing sampler from hole.

11.2.2 *Butters Fixed-Piston Sampler.*–The Butters sampler is a mechanically activated Hvorslev-type fixed-piston sampler. Figure 8 shows a cutaway view of the sampler.

11.2.2.1 Basic operation of the Butter's sampler is the same as the Hvorslev sampler with the exception of (a) the sampler has all right-hand threads, and (b) the sampler has a simplified piston rod locking and unlocking mechanism. These two features make the Butters sampler much easier to operate.

11.2.2.2 The sampler is assembled with the piston locked flush with the bottom of the sampling tube and lowered to the bottom of a cleaned borehole.

11.2.2.3 When the sampler contacts the bottom of the hole, piston rods are lowered through the drill rods and screwed onto the piston rod extension locking unit assembly at the top of the sampler. When this connection is made, continued clockwise turning of the piston rod unlocks the piston. The piston rod is secured to the drill rig mast or to a frame independent of the drill rig.

11.2.2.4 The sampler is advanced into the undisturbed soil in the same manner as that described for the thin-wall push tube sampler.

11.2.2.5 At the end of the push, the sampler is rotated approximately 1-1/2 revolutions to shear the sample off at the bottom of the sampling tube. The piston rods are disconnected from the sampler by turning in the counterclockwise direction until the piston rods are free. The piston rods are removed before the sampler is withdrawn.

11.2.2.6 The sampler is removed from the drill hole. During withdrawal, the piston is held stationary at the top of its stroke by the tension spring and lock washers. Extreme care must be exercised when removing the sampler from the drill hole to avoid jarring or losing the sample.

11.2.2.7 Remove the sample tube from the sampler, take in-place moisture content specimens, and determine wet and dry unit weights (fig. 5).

11.2.2.8 Usually, the undisturbed soil sample is handled and shipped in the sample tube using expandable packers or waxed plugs to seal the ends, unless the soil sample is extruded onsite.

11.2.2.9 Basic rules of operation for the Butters fixed-piston sampler follow.

11.2.2.9.1 The sampler shown on figure 8 is a simplified version of the Hvorslev sampler and contains fewer parts and screw connections. It is good practice to assemble the sampler and check its operation before lowering down the drill hole. The sampler contains several parts which require careful assembly for proper operation of locking and releasing the piston. As a general rule, the parts of the piston rod locking and releasing mechanism are snugly screwed together, but not tightened excessively.

11.2.2.9.2 Before attempting to sample, the mechanics of the sampler—particularly the piston rod locking and release mechanism—must be thoroughly understood by the operator because the precision parts are easily damaged by misuse or incorrect assembly. It is suggested that this sampler be used only by or under the direction of an experienced operator.

11.2.2.9.3 Drilling mud plays an important part in helping to hold the sample in the sampler by hydrostatic pressure at the bottom of the sample. Also, the suction effect of the piston pulls drilling fluid into the end of the sampler for about 1/4 inch which tends to seal the end, thus making the piston more effective in helping to hold the sample in the sample tube. Therefore, the drilling mud consistency and unit weight must be carefully controlled based on the particular type of soil encountered.

11.2.2.9.4 The Butters sampler head is designed for 3-inch o.d. push tubes; but with an adapter ring and an enlarged piston assembly, the sampler is easily converted to use 5-inch o.d. tubes.

11.2.2.9.5 Drill fluid levels should be maintained at the hole collar; and if the material sampled is susceptible to falling out of the tube, a block should be held on the bottom of the sampling tube before the tube is withdrawn clear of the mud column.

11.2.2.9.6 The soil sample is usually handled and shipped in the sampling tube using expanding packers to seal the ends.

11.2.2.9.7 This sampler is not prone to cutting into the sides of the hole as it is lowered because the piston is locked in the down position at the bottom of the thin-wall push tube as the sampler is lowered downhole. Because the piston is locked in position, it can be placed firmly against the bottom of the hole without picking up slough from the bottom of the hole.

11.2.2.10 Specific assembly and operation procedures for the Butters fixed-piston sampler follows.

11.2.2.10.1 Before assembly, note the following identification marks and features of the Butters sampler:

a. "UP" stamped on sampler head and square piston rod.

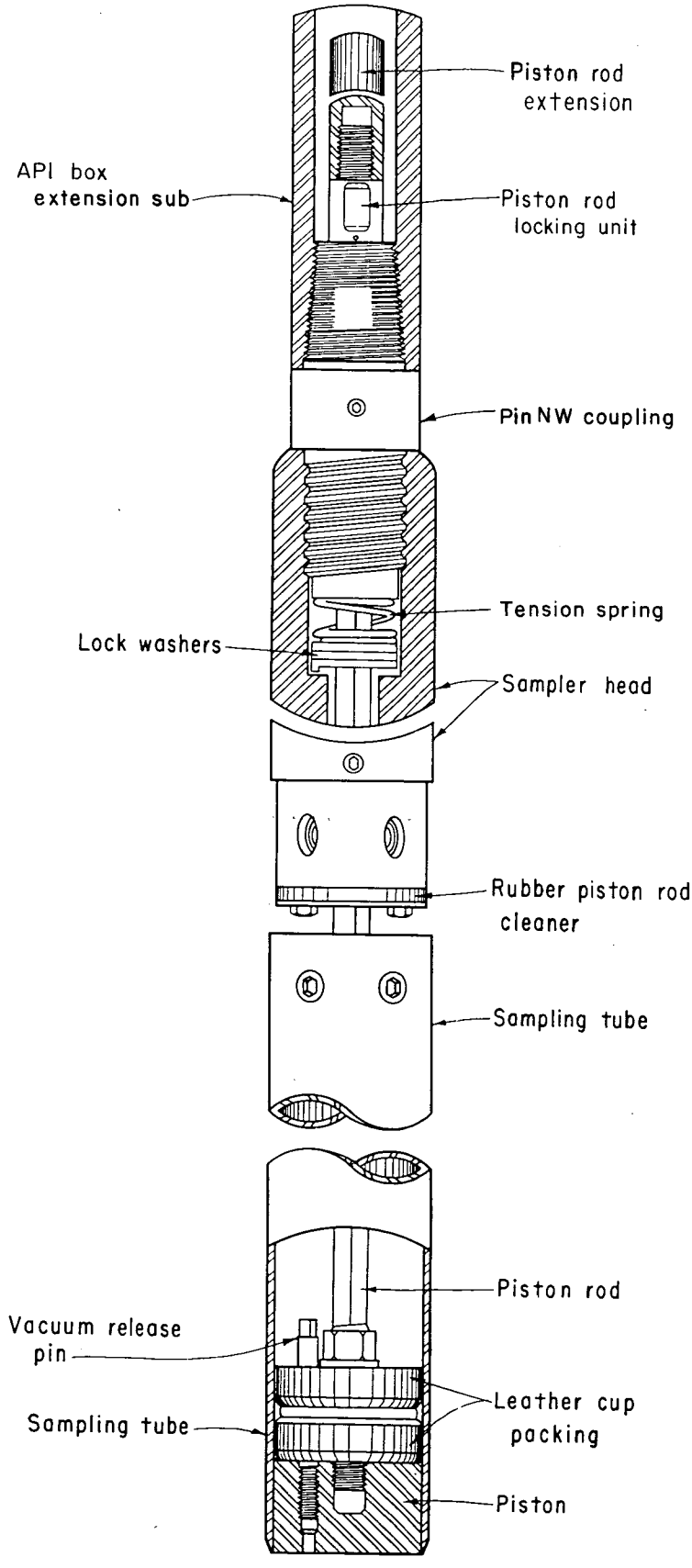

Figure 8. – Butters thin-wall fixed-piston sampler (Hvorslev type).

b. A filed mark on the square piston rod located about 8-1/4 inches down from the top.

c. A small filed mark on one end of the NW pin coupling.

d. "O" and "L" stamped on piston rod locking unit indicating "open" and "lock" positions, respectively.

e. Always place sampler head in a vise with "UP" stamp on top when assembling or disassembling.

f. Always slide square piston rod with "UP" stamp on top through the sampler head when assembling.

g. Always have the locking washer with grabber knob facing up on the square piston rod when assembling.

11.2.2.10.2 Place sampler head (with 5-inch ring adapter if 5-inch o.d. sample tube is used) in vise in "UP" position.

11.2.2.10.3 Slide square piston rod (with piston removed) including small sub, locking unit, flat washer, spring, flat washer, and locking washer with grabber knob through the sampler head. Parts should be assembled in sequence listed.

11.2.2.10.4 Extend square piston rod with attachments through head until the filed mark [described in subpar. 11.2.2.10.1(b)] is flush with the two piston cleaner rod bolt heads at the base of the sampler head.

11.2.2.10.5 With set screw turned out of pin, slide pin coupling over square piston rod and tighten with a wrench.

11.2.2.10.6 In this position, the NW pin coupling set screw hole should be directly over the locking unit slot. The set screw can now be turned in until it fits into the slot on the locking unit. Do not turn in set screw too tight.

11.2.2.10.7 Check if the set screw is positioned properly:

a. The piston rod locking unit should turn freely from "0" to "L" position.

b. In "L" position, piston rod cannot be pulled or pushed through sampler head.

c. In "0" position, piston rod can be pulled back through the sampler head but not pushed through. If piston rod can be pushed through, check orientation of locking washers or spring tension because the locking washers are not gripping the square piston rod properly.

11.2.2.10.8 Turn piston rod locking unit to the "L" position. (Line up "L" with small file mark on the NW pin coupling.) Make sure locking unit is in "L" position because, if it is not in the "L" position, the piston will slide up into the tube when the sampler is lowered into the borehole and will require the sampler to be removed and reset.

11.2.2.10.9 With piston rod locking unit in the "L" position, assemble the 4-foot-long extension sub with the API box thread.

11.2.2.10.10 Thread on piston with leather cup packing making sure the leather is well oiled.

NOTE 10.–Because the piston is heavy, make sure to support the square piston rod to avoid bending the rod.

11.2.2.10.11 Make adjustments for varying tube lengths by turning piston up or down on piston rod. The bottom of the piston should be flush with the bottom of the sampling tube.

11.2.2.10.12 Slide the sampling tube over the piston, and attach the tube to the sampler head.

NOTE 11.–Ensure that the leather cup packing on the piston has a good friction fit inside the sampling tube. If the sample tube slides over the piston too freely, the leather cups should be forced out by wrapping tape around the inside of the piston rim to ensure a snug fit.

11.2.2.10.13 Attach 4-foot extension sub to the sampler, and measure entire sampler length, including the extension sub.

11.2.2.10.14 The sampler is now complete and ready to be lowered to the bottom of a cleaned out borehole.

11.2.2.10.15 Add enough drill rod to set the sampler on the bottom of the hole. Bring the last length of drill rod through the drill rig chuck assembly.

11.2.2.10.16 Add the piston rods in 10-foot sections through the drill rods.

NOTE 12.–Lower the short piston extension rod that has a standard pipe thread box connection in first. This section has to thread onto the small sub with a standard pipe thread pin that is attached to the top of the sampler. Always make sure this piston rod goes in first.

11.2.2.10.17 Make sure each section of piston rod is wrench tightened to adjacent sections. If these sections are not tight:

a. It will be difficult to "feel" the piston rod locking unit turn to the "0" position.

b. After the push when the piston rods are being removed, they may separate at a rod joint rather than at the top of the sampler making removal of both drill and piston rods difficult and time consuming.

11.2.2.10.18 When the leading pipe thread piston rod extension comes in contact with the sampler head, the piston rods should be raised and lowered carefully until the pipe threaded box end slides over the stub pin at the top of the sampler.

11.2.2.10.19 Turn the piston rods in the clockwise direction until you "feel" the piston rod locking unit turn to the "0" position. Do not overturn — a definite resistance should be felt when the piston rod locking unit has been turned to the "0" position.

NOTE 13.–It is fairly easy to "feel" the piston rod locking unit turn to the "0" position in shallow borings (less than 30 feet); but in deeper boreholes, it may become difficult to "feel" the turning.

11.2.2.10.20 Attach a hoisting plug to the top piston rod and chain directly over the plug to the drill rig mast with a turnbuckle used between the chain and hoisting plug.

11.2.2.10.21 Place a chalkmark or clamp a vise grip plier on the piston rods at a fixed elevation for a

reference point. (Usually, a location parallel to the top of the drill rod string is used.)

11.2.2.10.22 Tighten the turnbuckle until the aforementioned reference point rises about 1/2 inch.

11.2.2.10.23 Release tension on turnbuckle; this is a check to see if the piston rod locking unit is turned to "0" and if the locking washers are functioning properly. If the piston rod does not fall back to its original position, the unit is working properly.

11.2.2.10.24 Retighten turnbuckle to take up slack in chain.

11.2.2.10.25 Tighten the chuck on the drill rods, and advance (push) the sampler into the undisturbed soil.

11.2.2.10.26 The sampler is advanced and the sample retrieved and handled in the same manner as that described for the Hvorslev fixed-piston sampler. After advancing the sampler, the length of push should be recorded and the sampler rotated 1-1/2 to 2 revolutions to shear the sample at the bottom of the sampling tube.

11.2.2.10.27 After each sampling attempt, the sampler should be disassembled and thoroughly washed, cleaned and lubricated.

11.2.2.11 The following are precautions and recommendations for the Butters fixed-piston sampler.

11.2.2.11.1 The condition of poor recovery or a loose sample may occasionally occur. Possible causes of these conditions may be one or more of the following:

- Improper bit clearance ratio (a 0.0-percent bit clearance ratio should generally be used).
- Sample was not sheared completely at bottom of sampling tube.
- Piston malfunction (locking washers not working properly).
- Insufficient vacuum developed during the push (piston leathers should be forced out).
- Proper care was not used when removing sampler from hole.

11.2.3 *Performance Suggestions* (fixed-piston samplers).–The following suggestions improve sample quality and operation when using the Hvorslev and Butters fixed-piston samplers.

- Be thoroughly familiar with the operation and internal mechanism of the sampler.
- Always keep the sampler clean and lubricated. Sampler should be dismantled, thoroughly cleaned, and lubricated with light weight oil after each shift.
- Do not force the sampler through hard or gravelly soils.
- Refer to geologic logs of adjacent or nearby drill holes or any other geologic data that would familiarize the investigator with any unusual in-place conditions.
- Use care when removing the sampler from the borehole.
- Note and record all data (including hydraulic pressure, etc.) on the "Undisturbed Soil Sampling Data" form (see fig. 5).

11.2.4 *Piston Sampler Procedures.*– The following general procedures are for using the mechanically activated piston samplers (Butters or Hvorslev).

11.2.4.1 Determine and record the tube number, mass, length, bit diameter, and tube diameter of each push tube prior to use. Length and diameter measurements should be the average of three readings at locations equally spaced around the tube. All mass measurements (with or without wet soil) should be performed on the same scale and recorded to the nearest 0.01 lbm. Under some conditions, it also may be necessary to determine the mass of each expanding packer or plug used to seal the sample tube ends. Determine and record the depth to the bottom of the cleaned out borehole.

11.2.4.2 Carefully lower the sampler, with piston flush with bottom of push tube, to the bottom of a cleaned out borehole. The sampler can be advanced through some slough as the piston prevents slough material from entering the tube. The sampler should be advanced until the bottom of the sampler is at the depth of the bottom of the cleaned out borehole.

NOTE 14.–If gravel-sized material or an excessive amount of slough is encountered at the bottom of the hole, the borehole should be cleaned out again, depending on amount of slough or size of gravel encountered. General guidelines would be penetration of 6 inches or more of slough or an amount and size of gravel that may cause damage to the sampling tube. Record slough or gravelly conditions on the form (fig. 5).

11.2.4.3 Piston rods are lowered, attached to the sampler piston rod, the piston unlocked, and the piston rod secured to the drill rig mast as described in the assembly and operation procedures.

11.2.4.4 The sampler then is advanced into the undisturbed soil at a steady, continuous rate for a maximum push of 30 inches. The total push should be as long as possible without exceeding 30 inches. The downward thrust should be stopped if the sampler comes in contact with hard material, and at no time should the drill rig raise off the ground as this will cause damage to the sampler and possible injury to drill personnel.

11.2.4.5 After advancing the sampler, the length of push should be recorded and the sampler rotated one and one-half to two revolutions to shear the sample at the bottom of the sampling tube.

NOTE 15.–Under some conditions, it may be advisable to wait 10 to 15 minutes before shearing the sample in order for sufficient friction and adhesion to develop between the sample and the sampling tube.

11.2.4.6 After rotation, remove the piston rods. Withdraw the sampler slowly and at uniform speed; fast withdrawal, sudden stops, and vibration should be avoided. The mud level should be maintained at the top of the hole at all times during sampler removal.

NOTE 16.–It is very important that proper sample trimming and handling procedures be followed because of the sensitive nature of the material sampled with a fixed-piston type sampler.

11.2.4.7 Immediately after the bottom of the sampler clears the top of the hole, inspect the sample and make a determination if the material will stay in the tube or if it is loose and might be susceptible to falling out.

If sample will stay in tube:

a. Remove sampler from drill rods, and lay sampler in the horizontal position.
b. Trim out approximately 2 inches of material from the bottom using the correct diameter trimming tool.
c. Retain the trimmings for a moisture content specimen and place in a moistureproof container. Be careful not to let the material dry out or be contaminated with drilling fluid or other contaminants that could affect the natural moisture content.
d. Measure and record the bottom trimmed-in length on figure 5, and insert an expandable packer or waxed end plug whose mass has been determined.
e. Visually classify the material from the trimmings.

If the sample is loose or susceptible to falling out:

a. Maintain the sampler in the vertical position.
b. Perform procedures b, c, and d as described above.

NOTE 17.–Be sure to properly secure sampler to the drill rig whenever the sampler is hanging in the vertical position. *Do not secure the sampler by the cathead-rope method.* Also, if free water is draining out of the sampler when obtaining a moisture content sample, make note of this condition on the data form. This will help to avoid unreliable moisture content data.

11.2.4.8 With the bottom of the sample properly trimmed, measured, and plugged, remove the bolts or capscrews attaching the sample tube to the sampler head.

11.2.4.9 Release the vacuum developed during the push in order to remove the tube from the sampler head. If the sampler does not have a vacuum breaker mechanism, it is necessary to release the vacuum by either (a) drilling a hole through the tube just below the piston, or (b) pulling and slowly rotating the sample tube until the piston leathers are exposed and then carefully tilting the tube allowing air to enter and thereby releasing the vacuum.

11.2.4.10 Once the vacuum has been released, remove the sample tube and measure and record the length to the top of the sampler prior to trimming. Calculate and record the recovery length on figure 5.

11.2.4.11 Compare the recovery length to the length of push to determine amount of slough material or amount of compaction or compression that occurred.

NOTE 18.–Actual sample recovery length does not include any slough material which may be on the bottom of the hole. Recovery length is based on the depth previously sampled or drilled compared to the length of push. Under most fixed-piston sampling conditions, the amount of slough material can be minimized because the piston in its initial position is at the bottom of the tube preventing slough material from entering, which allows the operator to advance the sampler through the slough to the bottom of the hole. However, care must be taken not to force the sampler through coarse-grained cuttings or slough material that may tend to densify the underlying sample interval.

11.2.4.12 Slough or disturbed material must be trimmed out of the top end of the sample tube. When using the 5-inch o.d. sample tube, it is advisable to hand muck the disturbed material out and then do the final trimming with the trimming tool. Measure and record the top trimmed-in length on figure 5. Visually classify the material from the trimmings in accordance with USBR 5005.

NOTE 19.–When using any of the fixed-piston samplers, the material on the top end of the tube may not look like slough or disturbed material because of the wet consistency of the material and the fact that the piston in its initial position has flattened the material making it visually appear to be undisturbed. For this reason, it is important to compare length of push to recovery length to determine the amount of slough at the top of the sample tube.

11.2.4.13 If the sampler was maintained in the vertical position during bottom trimming, it also should be maintained in that position for top end trimming. If this is the case, be careful not to compress the top end during trimming. Depending on degree of saturation and consistency, it may be necessary to tilt the sample tube somewhat to aid in removing the disturbed material.

11.2.4.14 A moisture content specimen should be obtained from the trimmings after all disturbed material has been removed. Care must be taken not to let the moisture content specimen dry out or to become contaminated with drilling fluid or other contaminants.

11.2.4.15 Calculate and record the trimmed sample length by adding trimmed-in lengths from both ends and subtracting the total trimmed-in length from the length of tube.

11.2.4.16 Visually classify the material from the top end in accordance with USBR 5005.

11.2.4.17 Insert an expandable packer or plug, whose mass has been determined, to seal the top end of the tube.

11.2.4.18 Determine and record the mass of the sample tube with wet soil to the nearest 0.01 lbm as shown on figure 5.

NOTE 20.–Determine the mass in the vertical position if vertical procedures were performed previously.

11.2.4.19 All pertinent data such as sample number, depth interval, length of push, recovery length, trimmed sample length, tube and soil mass, soil classification, sample condition, bit and tube area, and any other information that may be forgotten or misplaced if not recorded immediately is recorded as shown on figure 5.

11.2.4.20 If the undisturbed material is not to be extruded onsite, clearly label the sample tube with (a) feature or project, (b) drill hole number, (c) sample number, (d) hole elevation and location, (e) depth interval, (f) top and bottom ends, and (g) mass of tube and soil (optional).

11.2.5 *Mechanical Sampler Caution.*–The following are sampling precautions using mechanically activated fixed-piston samplers.

11.2.5.1 Possible causes of sampler malfunction:

a. Sampler assembled improperly.
b. Worn parts or burrs on metal parts.
c. Sampler not properly cleaned and lubricated (sand in mechanism).

11.2.5.2 Possible reasons for no recovery (material falls out of tube):

a. Piston rod locking unit is not functioning properly, allowing the piston to slide down and push the sample out during withdrawal.
b. Not enough vacuum developed because of (1) worn piston leathers, (2) leathers not properly lubricated (soak in neatsfoot oil), and (3) improper clearance between leathers and inside diameter of sampling tube. (It may be necessary to build up the leathers by wrapping friction tape between the piston and the leathers to force the leathers out.)

The friction developed between the piston leathers and the tube determines the amount of vacuum that is developed. The piston should not slide over the piston with too much nor too little resistance.

11.2.5.3 Possible causes of not being able to remove tube from sampler head:

a. Vacuum has not been released. (It may be necessary to drill a hole through the tube just below the piston.)
b. Too much vacuum has developed, caused by too tight a fit between leathers and tube.

11.2.6 *Osterberg Fixed-Piston Sampler.*–The Osterberg sampler is a hydraulically activated fixed-piston sampler. Figure 9 shows the sampler and sampling procedure.

11.2.6.1 The Osterberg sampler is significantly different in design and operation from the mechanically activated Hvorslev and Butters samplers. This sampler is faster and easier to use than either of the mechanically activated samplers because it does not require use of piston rods and is easier to assemble, operate, and disassemble.

11.2.6.2 The sampler is assembled with the piston flush with the bottom of the sampling tube and lowered to the bottom of a cleaned out drill hole. The connecting drill rods are secured to the drill rig, and fluid under pressure is applied through the drill rod to advance the sample tube into the undisturbed soil. As the fluid pressure (most commonly water) is applied, the inner sampler head—with sampling tube attached—is forced out of the pressure cylinder. When the inner sampler head has reached its full stroke and the sampling tube has penetrated its full depth into the soil, the pressure is relieved through bypass ports in the hollow piston rod.

11.2.6.3 The sampler is then rotated to shear the sample off at the bottom of the sampling tube. The shearing is accomplished by a friction clutch mechanism that allows the inside sampler head to grasp the inside of the pressure cylinder when the drill rods are rotated at ground surface. This action also locks the sample tube in position for withdrawal from the hole. Extreme care must be taken when removing the sampler from the drill hole to avoid jarring or losing the sample.

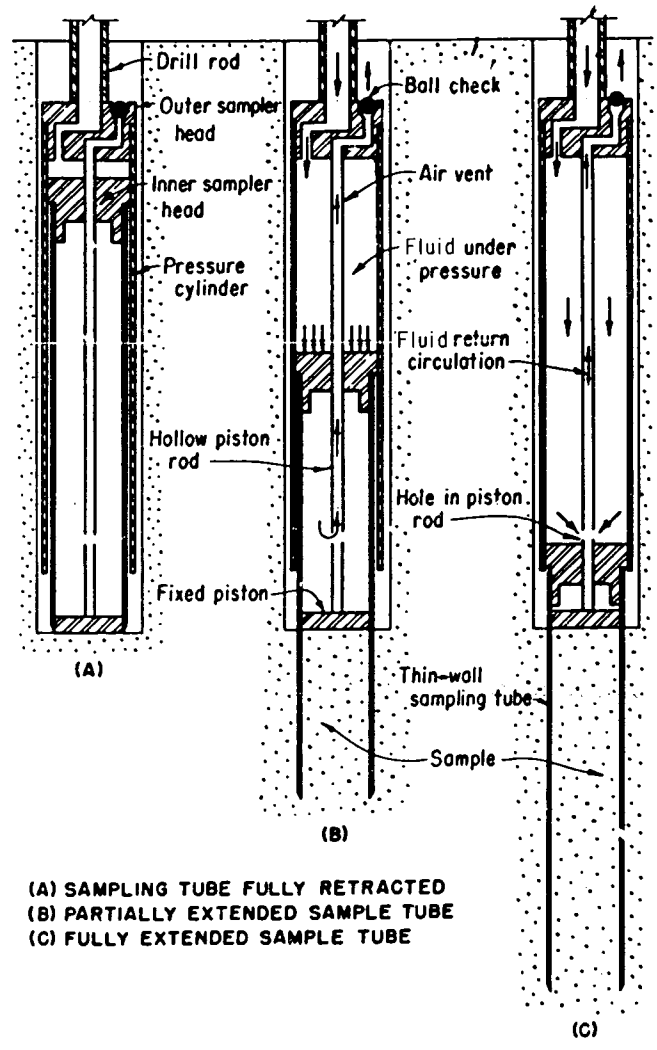

Figure 9. - Thin-wall fixed-piston sampler (Osterberg type).

11.2.6.4 Basic rules of operation for the Osterberg sampler:

11.2.6.4.1 The Osterberg sampler is relatively simple to operate. The sampler does contain some moving parts and O-ring seals which require careful assembly and must be kept clean and lubricated for proper operation.

11.2.6.4.2 Before attempting to sample, the mechanics of the sampler must be thoroughly understood by the operator.

11.2.6.4.3 As a general rule, the threaded components are snugly screwed together, but not tightened excessively. The fixed-piston (lower or stationary piston) should be securely pinned to the hollow piston rod, and the inner sampler head (floating piston) should be checked to make sure it slides freely on the hollow piston rod.

11.2.6.4.4 Drilling mud plays an important part in sampling with the Osterberg sampler. The drilling mud

consistency and unit weight must be carefully controlled for application to the particular type of soil encountered. The drilling mud helps to hold the sample in the sample tube by hydrostatic pressure at the sample bottom. The suction effect of the piston pulls drilling mud into the bottom end of the sample for approximately 1/4 inch which tends to seal the end, thus making the piston more effective in helping to hold the sample. Drill mud levels should be maintained at the collar of the hole.

11.2.6.4.5 A supply of clear water should be available to advance the sampler. Use of drilling mud to advance the sampler is not recommended because sand particles suspended in the drill mud act as an abrasive, damaging the O-ring seals. Clear water also should be used to flush the sampler after each sampling attempt.

11.2.6.4.6 The Osterberg sampler is commercially available in the 3- and 5-inch-diameter size with outside diameters of the outer barrel at 3-3/4 and 5-3/4 inches, respectively. Thin-wall sampling tubes are especially designed to fit the Osterberg sampler. Conventional thin-wall tubes used for the thin-wall push tube sampler, Hvorslev and Butters fixed-piston samplers, will not adapt to the Osterberg sampler.

11.2.6.4.7 The sampler is advanced by fluid pressure, and an air bubble will be observed at the top of the mud column indicating the sampler has been advanced its full distance.

11.2.6.4.8 After pushing, the sampler should be rotated approximately two to three revolutions to shear the sample off at the bottom of the sampling tube. The sampler should be withdrawn slowly and very carefully from the hole to avoid jarring.

11.2.6.4.9 If the material sampled is susceptible to falling out of the tube, a block should be held on the bottom of the sampling tube before the tube is withdrawn clear of the mud column.

11.2.6.4.10 Usually, the undisturbed sample is shipped in the thin-wall sampling tube using expandable packers or prewaxed wooden plugs to seal the ends.

11.2.6.4.11 The Osterberg sampler is not prone to cutting into the sides of the borehole as it is lowered because the piston is in the down position at the bottom of the push tube as the sampler is lowered downhole. Because the piston is locked in position, it can be placed firmly against the bottom of the hole without picking up slough from the bottom of the hole.

11.2.6.5 Specific assembly and operation procedures for the Osterberg fixed-piston sampler are as follows:

11.2.6.5.1 The Osterberg sampler contains component parts that require careful assembly and operation. Assembly and operation must be performed in the sequence listed below to ensure proper operation.

11.2.6.5.2 Inspect each component part for wear and condition. The exterior of the piston rod should be smooth and free of burrs or rust. The interior of the piston rod should be free of obstructions. Inspect the O-rings on (a) the outside of the fixed piston, (b) the outside of the inner sampler head, and (c) the inside of the inner sampler head. Inspect the ball check valve.

11.2.6.5.3 Slide the hollow piston rod through the inner sampler head being careful not to tear the O-rings with the threaded end of the piston rod.

11.2.6.5.4 Attach the fixed-piston to the hollow piston rod.

11.2.6.5.5 Attach the hollow piston rod with fixed-piston and inner sampler head onto the outer sampler head. Make minor adjustments for the length of the thin-wall sample tube by threading the hollow piston rod in or out of the outer sampler head.

11.2.6.5.6 Attach the thin-wall sample tube to the inner sampler head.

NOTE 21.–(a) Make sure the inside of the sample tube is clean and smooth. It may be necessary to file down and smooth out the prebored capscrew holes.

(b) Make sure there is a good friction fit between the O-rings on the fixed piston and the sample tube. If the fixed piston is loose or slides too freely, force the O-ring out by wrapping tape around the inside of the O-ring seat.

(c) Turn capscrews until *flush* with the outside of the sample tube. If capscrews are left sticking out, they will hang up on the rib at the bottom of the pressure cylinder and prevent the sample tube from extending to full stroke during the advance.

11.2.6.5.7 Slide the assembled unit into the pressure cylinder until the inner sampler head roller slots are still fully exposed.

11.2.6.5.8 Install the friction clutch rollers, or "pawls", and springs in the inner sampler head roller slots.

11.2.6.5.9 Hold rollers in flush with outside of inner sampler head by depressing the springs and carefully push the assembly into the pressure cylinder.

NOTE 22.–Be careful not to pinch fingers between the rollers and pressure cylinder when doing this. Also, it will be necessary to lift the sample tube up over the pressure cylinder ribs in order to center it in the cylinder.

11.2.6.5.10 Attach pressure cylinder to the other sampler head. This connection should be snug but not tightened excessively.

11.2.6.5.11 Manually unlock the friction clutch. This can be checked by rotating the sample tube. It should rotate in only one direction.

NOTE 23.–The friction clutch is for the purpose of locking the inner sampler head to the pressure cylinder when it is necessary to shear the sample off at the bottom of the tube. At all other times, the clutch should be unlocked.

11.2.6.5.12 The assembled sampler is now ready to be lowered into a cleaned borehole making drill rod connections as required to rest the sampler on the bottom of the hole.

NOTE 24.–All drill rods and connection couplings should be inspected to ensure that they are not plugged. Fluid must be pumped through the rods and couplings to advance the sampler.

11.2.6.5.13 The connecting drill rods should be chucked into the drill head or otherwise securely fastened to the drill rig.

11.2.6.5.14 Make the necessary circulatory connections from a pump to the connecting drill rods, including a bypass circulation system. Generally, pressure up to 275 lbf/in^2 will be required to push the sample tube into the undisturbed soil.

11.2.6.5.15 Pump the fluid (preferably clear water) into the sampler—while watching the pressure increase—until a pressure drop is observed and a return flow (air bubbles) is observed at the top of the hole. Bypass fluid circulation, and disengage pump.

NOTE 25.–When the fluid pressure does not decrease and a return flow is not observed, it usually indicates that a full stroke (push) has not been achieved. If this occurs, it will be necessary to measure the distance it did actually push once the sampler has been lifted out of the hole.

11.2.6.5.16 Shear the soil at the bottom of the sampling tube as follows:

Rotate the sampler two or three revolutions in the clockwise direction. On rotating the sampler, the friction clutch is locked; and consequently, the inner sampler head and the sample tube rotate within the pressure cylinder which allows the soil to be sheared at the bottom of the tube.

11.2.6.5.17 Carefully remove the sampler from the hole.

11.2.6.5.18 After each sampling attempt, the sampler should be washed, cleaned, and lubricated.

11.2.6.6 General procedures for using the hydraulically activated Osterberg fixed-piston sampler are as follows:

11.2.6.6.1 Determine and record the tube number, mass, length, bit diameter, and tube diameter of each push tube prior to use. Length and diameter measurements should be the average of three readings equally spaced around the tube. All mass measurements (with or without wet soil) should be performed on the same scale and recorded to the nearest 0.01 lbm. Under some conditions, it also may be necessary to determine the mass of the expanding packers or plugs to seal the sample tube ends.

11.2.6.6.2 Carefully lower the sampler, with piston flush with bottom of push tube, to the bottom of a cleaned out borehole. The sampler can be advanced through some slough as the piston prevents slough material from entering the tube.

NOTE 26.–If gravel-sized material or an excessive amount of slough is encountered at the bottom of the hole, the borehole should be cleaned out again, depending on amount of slough or size of gravel encountered. General guidelines would be penetration of 6 inches or more of slough or an amount and size of gravel that may cause damage to the sampler tube. Record slough or gravelly conditions on the data form (fig. 5).

11.2.6.6.3 The connecting drill rods should be securely attached to the drill rig to provide a reactionary force.

11.2.6.6.4 After making the necessary water pressure connections, the sampler tube should be forced into the undisturbed soil by fluid pressure. The sampler tube cannot be overpushed because the fluid pressure is automatically relieved by circulation bypass through ports in the hollow piston rod and out the ball check valve once the sample tube has advanced its full length.

11.2.6.6.5 After advancing the sampler, the length of push should be recorded and the sampler rotated two or three revolutions to shear the sample at the bottom of the sampling tube.

NOTE 27.–Under some conditions, it may be advisable to wait 10 to 15 minutes before shearing the sample in order for sufficient friction and adhesion to develop between the sample and the sampling tube.

11.2.6.6.6 After rotation, the sampler should be withdrawn slowly and at uniform speed; fast withdrawal, sudden stops, and vibration should be avoided. The mud level should be maintained at the top of the hole at all times during sampler removal.

NOTE 28.–It is very important that proper sample trimming and handling procedures be followed because of the sensitive nature of the material sampled with a fixed-piston type sampler.

11.2.6.6.7 Immediately after the bottom of the sample clears the top of the hole, inspect the sample and make a determination if the material will stay in the tube or if it is loose and might be susceptible to falling out.

If the sample will stay in tube:

a. Remove sampler from drill rods, and lay sampler in the horizontal position.
b. Trim out approximately 2 inches of material from the bottom of the tube using the correct diameter trimming tool.
c. Retain the trimmings for a moisture content specimen and place in a moistureproof container. Be careful not to let the material dry out or be contaminated with drilling fluid or other contaminants that could affect the natural moisture content.
d. Measure and record the bottom trimmed-in length, and insert an expandable packer or waxed end plug whose mass has been determined.
e. Visually classify the material from the trimmings in accordance with USBR 5005.

If the sample is loose or susceptible to falling out:

a. Maintain the sampler in the vertical position.
b. Perform procedures b, c, and d as described above.

NOTE 29.–*Be sure to properly secure sampler to drill rig* whenever the sampler is hanging in the vertical position. *Do not secure the sampler using the cathead — rope method.* Also, if free water is draining out of the sampler when obtaining a moisture content sample, make note of this condition on the data form. This helps to avoid unreliable moisture content data.

11.2.6.6.8 Remove bolts/screw attaching sample tube to the sampler head.

11.2.6.6.9 Release vacuum developed during the push in order to remove tube from sampler head. If the sampler does not have a vacuum breaker mechanism, it is necessary to release the vacuum by either (a) drilling a hole through the tube just below the piston, or (b) pulling and slowly rotating the sample tube until the O-rings are exposed and then carefully tilting the tube to allow air to escape and thereby releasing the vacuum.

11.2.6.6.10 Once the vacuum has been released, remove the sample tube and measure and record the length to the top of the untrimmed sample. Calculate and record the sample recovery length as shown on figure 5.

11.2.6.6.11 Compare the sample recovery length to the length of push to determine amount of slough material or amount of compaction or compression that occurred.

NOTE 30.–Actual sample recovery length does not include any slough material which may be on the bottom of the hole. Recovery length is based on the depth previously sampled or drilled to compare to the length of push.

Under most fixed-piston sampling conditions, the amount of slough material can be minimized because the piston in its initial position is at the bottom of the tube preventing slough material from entering, which allows the operator to advance the sampler through the slough to the bottom of the hole. However, care must be taken not to force the sampler through coarse-grained cuttings or slough material that may tend to densify the underlying sample interval.

11.2.6.6.12 Slough or disturbed material must be trimmed out of the top end of the sample tube. When using the 5-inch o.d. sample tube, it is advisable to hand muck the disturbed material out and then do the final trimming with the trimming tool. Measure and record the top trimmed-in length on figure 5. Visually classify the material from the trimmings in accordance with USBR 5005.

NOTE 31.–When using any of the fixed-piston samplers, the material on the top end of the tube may not look like slough or disturbed material because of the wet consistency of the material and the fact that the piston in its initial position has flattened the material making it visually appear to be undisturbed. For this reason, it is important to compare length of push to recovery length to determine the amount of slough at the top of the sample tube.

11.2.6.6.13 If the sampler was maintained in the vertical position during bottom trimming, it also should be maintained in that position for top end trimming. If this is the case, be careful not to compress the top end during trimming. Depending on degree of saturation and consistency, it may be necessary to tilt the sample tube somewhat to aid in removing the disturbed material.

11.2.6.6.14 A moisture content specimen should be obtained from the trimmings after all disturbed material has been removed. Care must be taken not to let the moisture content specimen dry out or to become contaminated with drilling fluid or other contaminants.

11.2.6.6.15 Calculate and record trimmed sample length by adding trimmed-in lengths from both ends and subtracting the total trimmed-in length from the length of the tube.

11.2.6.6.16 Visually classify the soil from the top end in accordance with USBR 5005.

11.2.6.6.17 Insert an expandable packer or waxed plug whose mass has been determined to seal the top end of the tube.

11.2.6.6.18 Determine and record the mass of the sample tube with wet soil to 0.01 lbm as shown on figure 5.

NOTE 32.–Determine the mass in the vertical position if vertical procedures were previously used.

11.2.6.6.19 Clearly label the sample tube with the following information: (a) feature or project, (b) drill hole number, (c) sample number, (d) hole elevation and location, (e) depth interval, and (f) top and bottom end.

11.2.6.6.20 Record all pertinent data, such as (a) sample number, (b) bit and tube diameters, (c) depth interval, (d) recovery length, (e) trimmed sample length, (f) tube and soil masses, (g) soil classification, (h) sample condition, and any other information that may be forgotton or misplaced if not recorded immediately.

If the undisturbed material is not to be extruded onsite, clearly label the sample tube with (a) feature or project, (b) drill hole number, (c) sample number, (d) hole elevation and location, (e) depth interval, (f) top and bottom ends, and (g) mass of tube and soil (optional).

11.2.7 *Modified Osterberg Fixed-Piston Sampler.*– The modified Osterberg sampler, like the Osterberg, is a hydraulically activated fixed-piston sampler. It uses the same basic design and principles of operation as the conventional Osterberg sampler. All of the general procedures described for the Osterberg sampler also apply to the modified Osterberg sampler.

11.2.7.1 Major differences and improvements in the modified Osterberg sampler as compared to the conventional Osterberg are as follows:

a. The thin-wall push tube was replaced with thicker wall steel tubing machined to accept an aluminum irrigation pipe inner liner and is equipped with a case hardened, replaceable drive shoe.

b. The aluminum inner liners are economical and readily available from commercial sources. The aluminum liners should be precut to be compatible with the drive shoe and sample tube used.

c. The case-hardened drive shoes can be fabricated with various bit clearances for sampling a variety of soils with fine gravels. The drive shoes can be used and replaced as soil or sampling conditions warrant.

d. The modified sampler has considerably more rigidity and applicability to soils containing fine gravels.

e. The modified sampler design eliminates problems associated with removing the sampling tube from the inner sampler head caused by the vacuum developed during the sampling operation. This problem is eliminated because the thick-wall steel tubing has a vent hole through which the inner aluminum liner can be penetrated to break the vacuum seal and to allow easy removal of the inner liner.

f. The undisturbed sample contained in the aluminum liner is easily removed from the sampler by simply removing the drive shoe and pulling the liner out. Reloading is accomplished by sliding a new liner into the steel tubing, attaching the drive shoe, and pushing the steel tubing back up into the pressure cylinder.

g. The modified Osterberg sampler is not commercially available, but can be manufactured in the 3- and 5-inch-diameter sizes with outside diameters of the pressure cylinder at 3-3/4 and 5-3/4 inches, respectively.

11.2.8 *Performance Suggestions.*-The following suggestions improve sample quality and operation when using the Osterberg and modified Osterberg samplers.

- Be thoroughly familiar with the operation and internal mechanism of the samplers.
- Always keep the sampler cleaned and lubricated. Sampler should be dismantled, thoroughly cleaned, and lubricated after each shift.
- Do not force the sampler through hard or gravelly material.
- Refer to geologic logs of adjacent or nearby drill holes or any other geologic data that would familiarize the investigator with any unusual in-place conditions.
- Use care when removing the sampler from the borehole.
- Note and record all data (including water pressure, etc.) on the "Undisturbed Soil Sampling Data" form (see fig. 5).

11.2.9 *Hydraulic Sampler Caution.*-The following are sampling precautions using hydraulically activated fixed-piston samplers.

11.2.9.1 Possible causes of sampler malfunction:

a. Sampler assembled improperly.
b. Worn parts or burrs on metal parts.
c. Sampler not properly cleaned and lubricated (sand in mechanism)
d. Split O-rings.

11.2.9.2 Possible reasons for no recovery (material falls out of tube):

a. Friction clutch not working properly.
b. Not enough vacuum developed; caused by (1) worn O-rings, (2) O-rings not lubricated properly, and (3) improper clearance between O-rings and inside diameter of sampling tube. (It may be necessary to build up the O-rings by wrapping friction tape between the piston and O-ring to force O-ring out.)

The friction developed between the piston O-ring and the tube or liner determines the amount of vacuum that is developed. The liner or tube should not slide over the piston with too much or too little resistance.

11.2.9.3 Possible causes of not being able to remove tube from sampler head (Osterberg sampler):

a. Vacuum has not been released. (It may be necessary to drill a hole through the tube just below the piston.)
b. Too much vacuum has been developed, caused by too tight of fit between O-ring and tube.

11.3 *Double-Tube Core Barrel Samplers.*-There are basically four types of double-tube core barrel samplers:

The Denison, Denver, Pitcher, and continuous auger samplers. Figure 1 illustrates these samplers.

The Denison, Denver, and Pitcher samplers are similar in design and have disposable liners for handling and shipping the soil cores. The same general setup of operation apply for each of the three samplers (see fig. 10).

The Denison, Denver, and Pitcher samplers are well suited for sampling fine-grained, uncemented, or lightly cemented soils and will recover reasonably undisturbed samples if the soil is slightly cohesive and the drilling is done carefully.

NOTE 33.-Firm or dense cohesionless sands can often be sampled if performed and handled carefully. Loose sands may be densified during sampling operations, thus, permitting samples to be obtained, but with erroneous conclusions regarding in-place unit weight. When it is not known whether a sand is dense or loose, other samplers, such as fixed-piston samplers, are recommended. If a double-tube core barrel sampler is used, the recovery ratio (length of sample retrieved divided by distance the sampler was advanced) and results of field penetration tests will aid in reliability of calculated in-place unit weights.

The samplers also may be used in fairly firm to hard, brittle soils, partially cemented soils, and some soft rock which require a cutting action rather than a simple drive penetration. They are not suitable however for gravelly soils, low-unit weight cohesionless sands and loose silts below the ground-water table, very soft and plastic cohesive soils, or severely fissured or fractured materials. The Denver sampler was developed as experimental sampler and has — in most instances — been replaced by the Denison and Pitcher samplers.

The continuous auger sampler does not require drilling fluid to remove drill cuttings and is well suited for sampling soils that would be adversely affected by drilling fluids.

11.3.1 *The Denison Sampler*:

11.3.1.1 The Denison sampler consists of a rotating outer barrel with cutting teeth on the bottom, a nonrotating inner barrel with a smooth cutting shoe, a spring core catcher (used only in special cases), and a liner to receive the sample and facilitate sample handling. The basic principle of operation is for the inner barrel to remain stationary and the outer barrel to rotate around

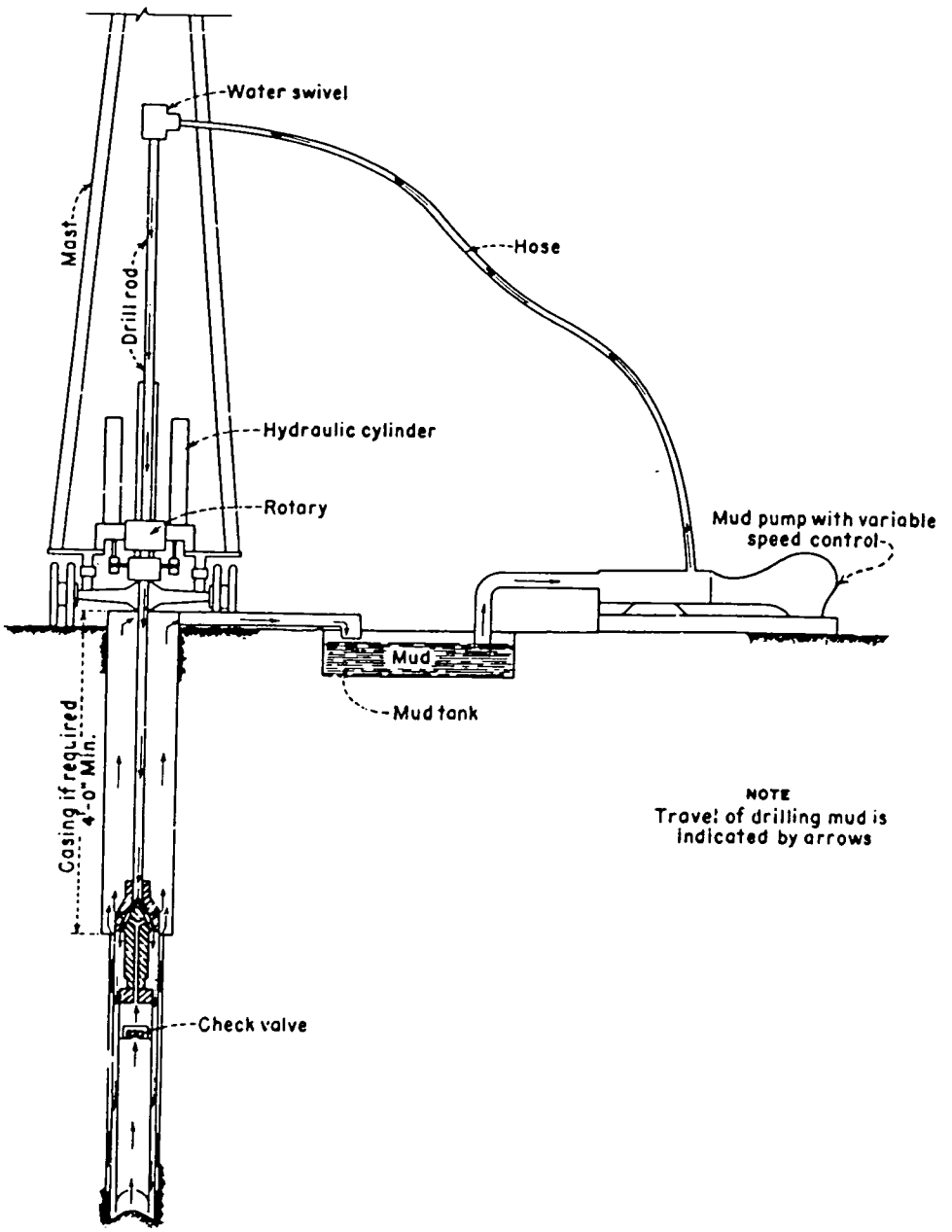

Figure 10. – Sampling with double-tube core barrel sampler.

the inner barrel and advance the sampler. Figure 11 shows a cutaway view of the sampler.

11.3.1.2 The Denison sampler has a 5-7/8-inch inside diameter liner that is 24 inches long. The liner is typically made of 28-gauge sheet metal although other liner materials may be used. The recommended sample length is 20 inches.

11.3.1.3 The sampler is used with an outer cutting bit, inset with carbide teeth.

11.3.1.4 The sampler is advanced in the borehole using standard drill rod.

11.3.1.5 Four 1/2-inch diameter fluid passages are used for drill fluid circulation and four 1/2-inch diameter vents are used to drain the inner barrel and stabilize hydrostatic pressure within the sampler.

11.3.1.6 The Denison liner head contains a self adjustment used to align the liner to the inner barrel shoe.

11.3.1.7 The Denison outer barrel head contains an upper and lower bearing which allows the outer barrel to turn while the inner barrel remains stationary. This provides for an undisturbed sample.

11.3.1.8 The inner barrel can be extended 6 inches past the cutting bit; however, a maximum of 3 inches is recommended. This is done when sampling soft materials and to isolate the material being sampled from drilling mud when sampling soft materials.

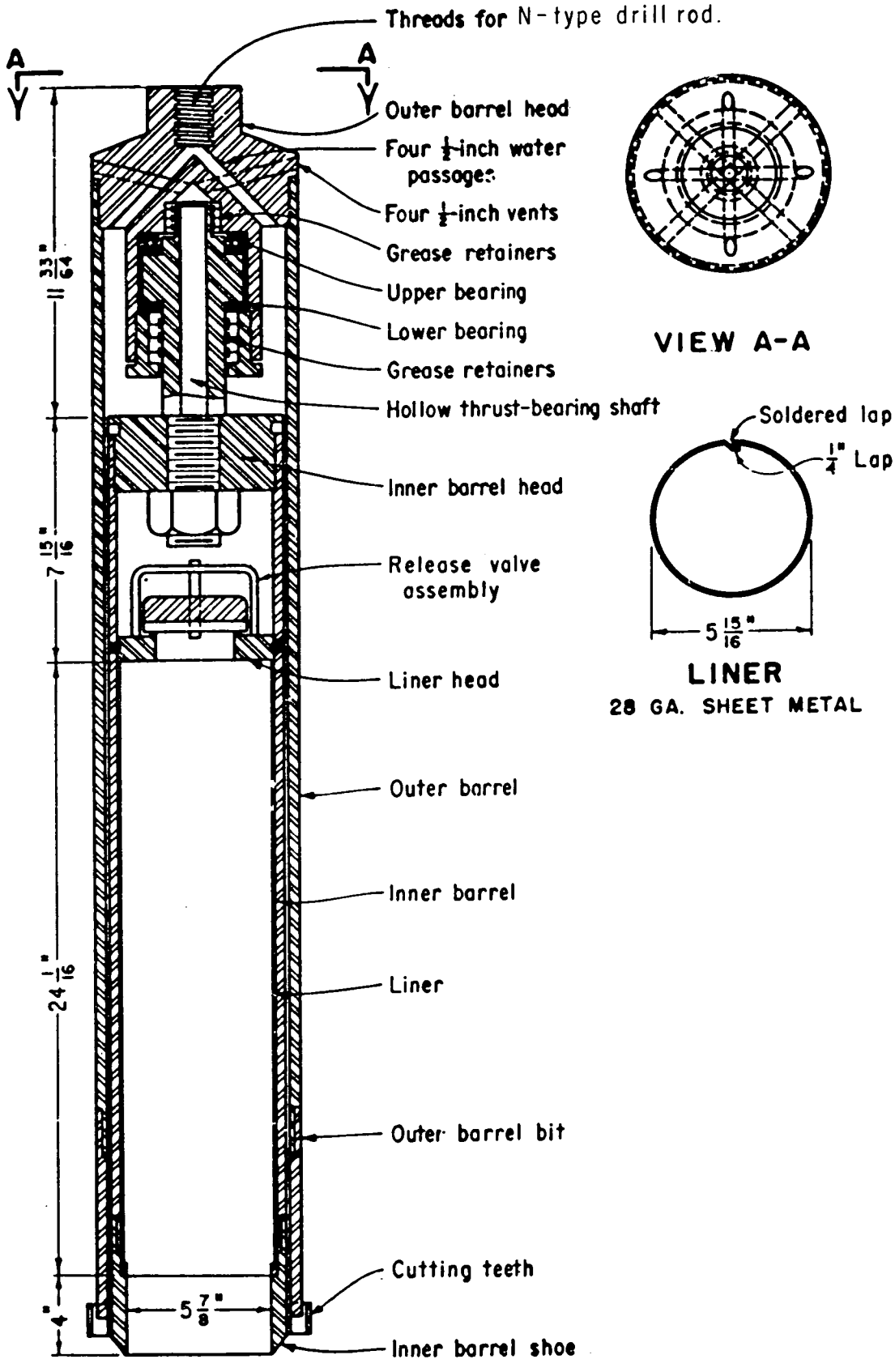

Figure 11. – Denison sampler (double-tube core barrel).

11.3.1.9 A core catcher can be used to retain the soil in the sampler if necessary. Normally, this is done if the sample is to be used for soil classification only and not for any type of testing.

11.3.1.10 The Denison sampler is rotated at a speed which allows the sample to move into the sampler without disturbance. Sampler rotation should vary with the type of soil being sampled.

11.3.2 *The Pitcher Sampler*:

11.3.2.1 The Pitcher sampler is a double-tube core barrel sampler equipped with a spring loaded inner barrel which permits the barrel to protrude or retract with changes in soil stiffness.

11.3.2.2 The Pitcher sampler, illustrated on figure 12, is recommended for sampling highly cemented, very dense, or varved material or where stratigraphy is such that there are alternating hard and soft layers of soil; the sampler was modified by the Bureau of Reclamation and is not the standard Pitcher sampler. The sampler was modified to accept standard size aluminum irrigation pipe.

11.3.2.3 The sampler generally ranges in size from 4-inch to 6-inch inside diameter.

11.3.2.4 The Pitcher sampler consists of an outer barrel head assembly and an inner barrel head assembly. The outer barrel head assembly is vented by use of check valves.

11.3.2.5 The Pitcher sampler contains a high tension spring used inside the outer barrel assembly to apply force to the inner barrel assembly which retracts if the material being sampled is too hard to penetrate by a hydraulic push.

11.3.2.6 In extremely firm soils, the spring compresses until the cutting edge of the inner barrel shoe is flush with the crest of the cutting teeth of the outer barrel bit.

11.3.2.7 In soft soils the spring extends so the inner barrel shoe protrudes below the outer barrel bit and prevents damage to the sample by the drilling fluid and drilling action.

NOTE 34.–Do not use air drilling with the Pitcher sampler.

11.3.2.8 The Pitcher sampler is rotary driven and is used with NW drill rods.

11.3.2.9 The Pitcher sampler has a modified inner barrel designed to accept standard size aluminum irrigation pipe having a 0.51-inch wall thickness. The purpose of the modification is to allow use of readily available pipe rather than crimped or soldered seam sheet metal liners.

11.3.2.10 Seals are placed around the inside stem to prevent disturbance of the sample from drill fluid. These seals should be inspected regularly.

11.3.2.11 The Pitcher sampler should have appropriate clearance between the inner barrel assembly and the outer barrel assembly to prevent rotation of the sample tube while sampling.

11.3.2.12 The carbide bit of the Pitcher sampler contains replaceable carbide inserts on each cutting tooth. If the parent material is very hard or cemented, the cutting bit can be replaced with a diamond cutting bit.

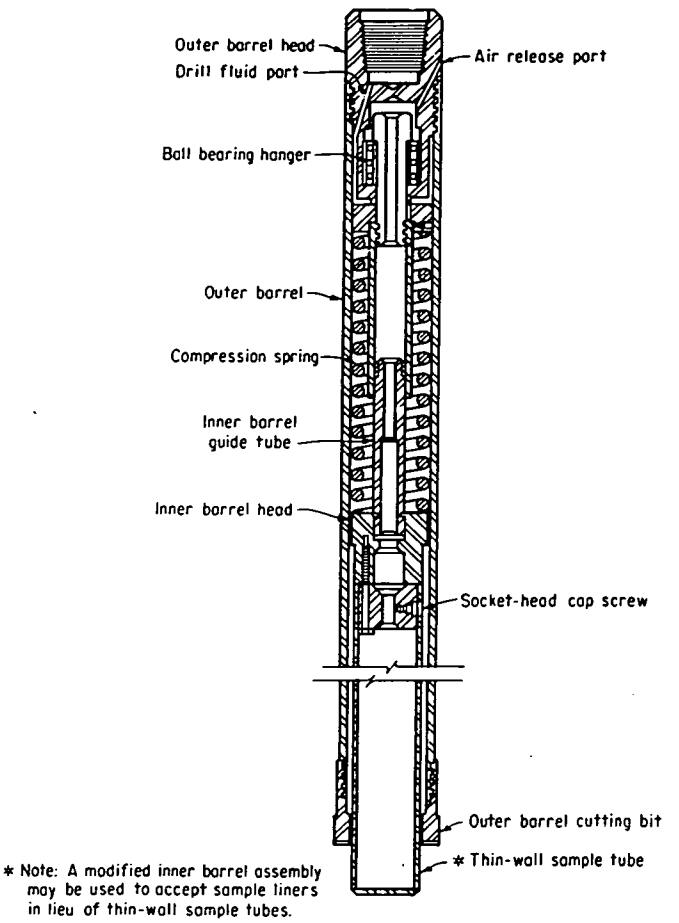

Figure 12. – Pitcher sampler (double-tube core barrel).

11.3.3 *The Continuous Hollow-Stem Auger Sampler*:

11.3.3.1 The continuous hollow-stem auger system, illustrated on figure 13, consists of a rotating outer auger barrel with cutting bits at the bottom and a nonrotating inner barrel with a smooth cutting shoe. The principle of operation is for the inner barrel to remain stationary and slide over the sample which is cut by the outer rotating bit. Cuttings are lifted from the hole by the auger on the outer barrel.

11.3.3.2 The continuous hollow-stem auger system consists of an outer auger barrel, which can range in size from 2-1/4-inch to 8-1/4-inch inside diameter, and an inner barrel assembly.

11.3.3.3 The continuous hollow-stem auger system is advanced by rotation in a drill hole. Additional sections of auger are added as the hole progresses. The auger acts as casing in the borehole.

11.3.3.4 The continuous hollow-stem auger system is operated with an inner barrel (sampler). The soil is collected in the inner barrel as the borehole is advanced. Continuous sampling is possible as the auger advances the borehole.

11.3.3.5 The inner barrel assembly contains a head and a liner.

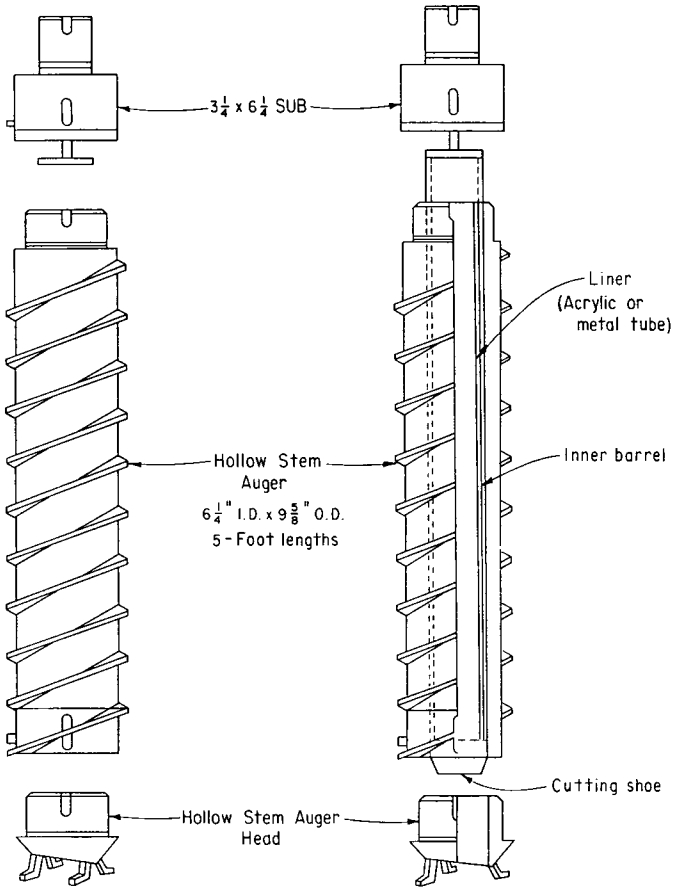

Figure 13. - Continuous hollow stem auger (not to scale).

11.3.3.6 The auger is defined by pitch, flight, outside diameter, and inside diameter.

11.3.3.7 The continuous hollow-stem auger is advanced in the drill hole by carbide cutting bits which accept replaceable carbide inserts. The bits have an inside diameter to allow for inner barrel sampler clearance.

11.3.3.8 The inner barrel is advanced inside and along with the hollow stem augers by solid hexagonal rods that are pinned together as the drill hole progresses.

11.3.3.9 The inner barrel assembly can be positioned with an adjustment rod to be advanced in front of the auger cutting bits or it can be kept even with the auger cutting bits. Minimal disturbance occurs when the inner barrel is advanced in front of the auger cutting bits by 3 inches. When the inner barrel assembly is even with or less than 3 inches past the cutting head, disturbance may occur due to the length of the auger bit cutting teeth.

11.3.3.10 The inner barrel assembly is fitted with 5 feet of liner. (It can be one 5-foot section or two 2-1/2-foot sections.) The liners can be metal or acrylic. Acrylic tubing has proven to be very beneficial as it is economical and provides for visual inspection of the material sampled. Liners should be checked for roundness and wall thickness. Acrylic tubing is reusable but should be checked for cracks before reuse. Metal liners tend to have higher wall friction than acrylic liners.

11.3.3.11 The liners are held in place in the inner barrel assembly by the cutting shoe which threads onto the end of the inner barrel assembly. Cutting shoes are machined with different bit clearance ratios. (See fig. 4 for bit clearance ratio calculation procedure.) Cutting shoe bit clearance ratios should be checked prior to use. Guidelines for bit clearance ratios for different soil types are:

Bit clearance ratio, %	*Material*
0 to 1/2	Sands
1/2 to 1	Silty sand, clay, silt
1 to 1-1/2	Expansive clay, shale

11.3.3.12 When sampling is not required, a center bit or a small center auger can be used to keep the hollow-stem open. The center auger is a left-handed auger rotating in the opposite direction of the main auger. It forces the parent material down and to the outside of the main auger to be carried to the surface by the hollow stem augers. The center auger can be replaced at any time with the inner barrel assembly and samples taken at desired depths.

11.3.3.13 If the continuous hollow-stem auger system is to be used below the groundwater level, the augers should be used with standard O-rings to prevent leakage. When augering below the water level, hydrostatic pressure should be maintained inside the hollow-stem at all times at a level to prevent heaving.

11.3.3.14 As the augers are rotating, downfeed pressure is applied to the system to clean the hole and bring cuttings to the surface. Excessive downfeed pressure causes the augers to corkscrew into the ground and could result in the augers binding in the hole.

11.3.3.15 The auger flights should be inspected for wear and if they do not meet hole diameter requirements, the flights can be built up by welding buildup rods on each flight.

11.3.3.16 The cutting bit carries from 4 to 12 carbide teeth. These teeth should be frequently inspected for wear and replaced as required.

11.3.3.17 All of the inner rods for the continuous hollow-stem auger system should be periodically checked for cracks.

11.3.3.18 The rod pins should be checked for wear, and a supply of spare pins should be available.

11.3.3.19 The main advantage of the continuous hollow-stem auger system is being able to advance the drill hole in dry materials without use of drill fluid or casing in the hole.

11.3.4 *Basic Operating Procedures for Double-Tube Core Barrel Samplers*:

11.3.4.1 The rate of penetration should be no greater than the speed at which the outer barrel is able to cut; that is, the downward force on the sampler should be a minimum.

11.3.4.2 The speed of rotation should be limited to that which will not tear or break the soil (generally this varies from 40 to 125 revolutions per minute).

11.3.4.3 Extension of the inner barrel shoe beyond the outer barrel cutting teeth depends on soil type and

should be the least amount which will result in a fully filled inner barrel and which will not cause undercutting or contamination of the sample by drilling fluid.

11.3.4.4 A core catcher should not be used unless absolutely necessary to retain the soil. The following procedure is recommended to effect sample recovery without use of a core catcher. Using the standard procedure, the sample is cored to within about 1-1/2 to 2 inches of the final desired depth; drilling fluid circulation is shut off and the coring operation completed to the required depth. This wedges cuttings between the inner barrel shoe and the outer barrel shoe and causes the inner barrel to rotate with the outer barrel, thus shearing the sample from the parent material. This procedure results in some compaction of the soil in the inner barrel shoe to form a plug and assist in sample recovery. Use of this procedure should be noted on the data form.

11.3.4.5 Consistency of the drilling fluid should be governed by the purpose for which it is intended.

11.3.4.6 Pump pressure should be the minimum necessary to circulate the fluid freely and carry the cuttings from the hole and stabilize the borehole walls.

11.3.4.7 The total length of sampler advancement should always be a few inches short of the length available for the sample to ensure that the sample is not compacted in the sampler. A 20-inch sample length plus the shoe length is considered the proper total length.

11.3.5 *Sampling Precautions Using the Double-Tube Auger Sampler*:

11.3.5.1 After completion of the sampling run, withdraw the sampler from the hollow-stem auger using extreme care at all times to avoid sample disturbance.

11.3.5.2 Remove the inner barrel cutting shoe (and core catcher if used) without jarring the sample.

11.3.5.3 If any unusual conditions or sampling problems are encountered, they should be recorded on the data form as shown on figure 5.

11.3.6 *General Procedures for Using the Double-Tube Auger Sampler*:

11.3.6.1 Determine the mass of sample liners prior to use. All mass measurements (with or without wet soil) should be performed on the same scale. Under some conditions, it also may be necessary to predetermine the mass of the expanding packers or plugs used to seal the sample liner ends.

11.3.6.2 After advancing the auger and obtaining the sample, the length of interval augered should be recorded.

11.3.6.3 When the sampler is withdrawn and the inner barrel cutting shoe removed, remove the liner and soil core.

11.3.6.4 The soil at the ends is removed for a length of about 2 inches to a flat smooth surface.

11.3.6.5 The soil retained in the inner barrel cutting shoe and the soil from the top of the core may be used for field inspection and classification.

11.3.6.6 A moisture content specimen should be obtained from the trimmings after all disturbed material has been removed. Care must be taken not to let the moisture content specimen dry out or to become contaminated with drilling fluid or other contaminants.

11.3.6.7 Measure and record top and bottom trimmed-in lengths (fig. 5), and insert expandable packers or prewaxed wooden end plugs whose masses have been determined.

11.3.6.8 Visually classify the material from the trimmings in accordance with USBR 5005.

11.3.6.9 Calculate and record the final trimmed sample length by adding the bottom and top trimmed-in length and subtracting the total trimmed-in length from the total liner length.

11.3.6.10 Determine and record the mass of the sample liner with wet sample to 0.01 lbm.

11.3.6.11 Record all pertinent data such as (a) sample number (b) depth interval (c) recovery length (d) trimmed sample length (e) liner and soil mass (f) soil classification (g) sample condition, and any other information that may be forgotten or misplaced if not recorded immediately as shown on figure 5.

11.3.6.12 If the undisturbed material is not to be extruded onsite, clearly label the sample tube with (a) feature or project (b) drill hole number (c) sample number, (d) hole elevation and location, (e) depth interval, (f) top and bottom ends and, (g) mass of tube and soil (optional).

11.4 *Preparation and Shipment of Undisturbed Samples*:

11.4.1 Before undisturbed samples are moved from the site, the liners or tubes should be clearly labeled with the information listed above.

NOTE 35.–It is very important to label the top and bottom of the tube immediately so orientation is correct.

11.4.2 Undisturbed sample tubes should be packed in premolded Styrofoam shipping containers or packed in moist sawdust or similar packing materials to reduce disturbance during handling and shipping.

11.4.3 Styrofoam containers are available to hold three 3-, 5-, or 6-inch-diameter samples of 24- or 36-inch length, and containers can be facricated for other sample sizes and lengths.

11.4.4 Heavy duty cardboard or plywood shipping boxes are required for additional support of the Styrofoam containers. Waxed double-wall cardboard shipping boxes are available to accommodate the Styrofoam containers.

NOTE 36.–Styrofoam inserts and waxed cardboard shipping boxes are inventory items stocked at the Bureau of Reclamation Central Warehouse, Denver Federal Center, Denver, Colorado.

11.4.5 The following paperwork should be included with each shipment of samples.

11.4.5.1 The letter of transmittal should include:

a. Bill of lading number and method and date of shipment.

b. Listing and identification of the samples giving type of sample, field sample number, drill hole number, and elevation or depth.

c. Purpose for which the samples were obtained.

11.4.5.2 A completed "Undisturbed Soil Sampling Data" form (fig. 5) for the corresponding samples.

11.4.5.3 A geologic log of the drill hole.

11.4.6 The shipping boxes should be clearly labeled with the following information:

a. Feature or project
b. Drill hole number
c. Hole elevation and location
d. Sample numbers
e. Depth intervals
f. Box ____ of ____
g. "This side up" on appropriate side
h. "Do not drop"
i. "Protect from freezing or overheating"

11.4.7 Regardless of the shipment method, samples should be sent to the Denver Federal Center addressed:

Bureau of Reclamation
Geotechnical Services Branch, D-3760
Building 56, Entrance W-13
P O Box 25007
Denver CO 80225

12. Calculations

12.1 *Soil Sampling Record.*–Completion of the undisturbed soil sampling data form requires the following calculations.

12.1.1 Inside area of the bit or shoe:

$$A_b = \left(\frac{\pi d^2}{4}\right)/144 \quad (1)$$

where:

d = diameter of bit or shoe, in
A_b = inside area of bit, ft²
π = 3.14
144 = convert from in² to ft²

12.1.2 Sample recovery:

$$R_s = 100\left(\frac{\text{length of recovered sample, ft}}{\text{push length, ft}}\right) \quad (2)$$

where:

R_s = sample recovery, %
100 = convert from decimal to percent

12.1.3 Trimmed sample length:

$$L_t = \text{length of recovered sample} - (\text{bottom trimmed-in length} + \text{top trimmed-in length}) \quad (3)$$

where L_t equals trimmed sample length, ft.

12.1.4 Volume of sample:

$$V_s = L_t A_b \quad (4)$$

where V_s equals sample volume, ft³.

12.1.5 Field wet density:

$$\rho_{wf} = \frac{m_w}{V_s} \quad (5)$$

where:

m_w = mass of wet soil, lbm
V_s = sample volume, ft³

12.1.5.1 Field wet unit weight:

$$\gamma_{wf} = \rho_{wf} \times 1 \quad (6)$$

where:

γ_{wf} = field wet unit weight, lbf/ft³
1 = convert from lbm to lbf

12.1.6 Field dry unit weight:

$$\gamma_{df} = \frac{\gamma_{wf}}{1 + \left(\frac{w}{100}\right)} \quad (7)$$

where:

γ_{df} = field dry unit weight, lbf/ft³
w = moisture content from USBR 5300

13. Report

13.1 The report for undisturbed soil sampling is to consist of a completed and checked "Undisturbed Soil Sampling Data" form (fig. 5). Each form should be filled out with factual, accurate, clear, and complete information.

13.2 All calculations are to show a checkmark.

14. Reference

[1] *Drillers Safety Manual*, Bureau of Reclamation, reprint 1982.

[2] *Construction Safety Standards*, Bureau of Reclamation, 510 pp., reprint 1987.

UNITED STATES DEPARTMENT OF THE INTERIOR
BUREAU OF RECLAMATION

USBR 7115-89

PROCEDURE FOR

PERFORMING FIELD VANE SHEAR TESTING

INTRODUCTION

This procedure is under the jurisdiction of the Geotechnical Services Branch, code D-3760, Research and Laboratory Services Division, Denver Office, Denver, Colorado. The procedure is issued under the fixed designation USBR 7115. The number immediately following the designation indicates the year of acceptance or the year of last revision.

1. Scope

1.1 This designation outlines a procedure for determining the in-place undrained shear strength of soft, saturated, fine-grained soils.

1.2 The procedure is used to determine subsurface conditions with respect to undrained shear strength for the design or analysis of foundations, and natural or excavated slopes.

1.3 This designation was written for the Bureau designed and fabricated vane shear apparatus. While much of the procedure is applicable when using other vane shear devices, specific instructions, as furnished by the manufacturer, concerning operation and data reduction should be observed.

2. Auxiliary Tests

2.1 Knowledge of the nature of the soil in which each vane shear test is made is necessary for assessment of the applicability and interpretation of the test results. Sampling should be performed in companion drill holes. Since the samples obtained must be representative of the material within the vane shear test interval, for most applications, they can be of a disturbed nature.

2.2 When site-specific correlations are to be developed, vane shear testing may be supplemented by penetration resistance tests, cone penetration tests, or undisturbed soil sampling yielding samples suitable for laboratory shear strength determinations conducted in accordance with USBR 7015, 7020 or 7021, and 7105, respectively.

3. Applicable Documents

3.1 *USBR Procedures*:

USBR 1000 Standards for Linear Measurement Devices
USBR 1007 Calibrating Dial Indicators
USBR 1045 Calibrating Force Transducers (Load Cells)
USBR 3000 Using Significant Digits in Calculating and Reporting Laboratory Data
USBR 3900 Standard Definitions of Terms and Symbols Relating to Soil Mechanics
USBR 7010 Performing Disturbed Soil Sampling Using Auger Boring Method
USBR 7015 Performing Penetration Resistance Testing and Sampling of Soil
USBR 7020 Performing Cone Penetration Testing of Soils — Mechanical Method
USBR 7021 Performing Cone Penetration Testing of Soils — Electrical Method
USBR 7105 Performing Undisturbed Sampling by Mechanical Drilling Methods

3.2 *ASTM Standard*:

D 2573 Standard Method for Field Vane Shear Test in Cohesive Soil
Other applicable ASTM Standards as related to above cited USBR designations

3.3 *USBR Document*:

Driller's Safety Manual

4. Summary of Method

4.1 The vane shear test consists of pushing a four-bladed rectangular vane into undisturbed soil at depth and rotating it from the surface to determine the torsional force required to fail the soil along a cylindrical surface sheared by the vane. This force is then converted to an undrained shear strength.

5. Significance and Use

5.1 The vane shear test provides a measure of the undrained shear strength of soft, saturated, fine-grained soils.

5.2 The test can be used in soil that cannot be easily sampled in an undisturbed condition. When performed correctly, disturbance is minimal.

5.3 Soil can be tested under existing stress conditions by this method.

5.4 Some methods of advancing the test hole do not provide the opportunity to obtain samples of the material tested. Since the applicability and interpretation of the test results are related to the material type, companion holes must be drilled and sampled.

6. Apparatus

6.1 The vane shear test apparatus, illustrated on figure 1, consists of several principal assemblies which are described in the following subparagraphs:

6.1.1 The torque applicator is used to apply and measure the torsional force transmitted to the vane through the vane rod stem.

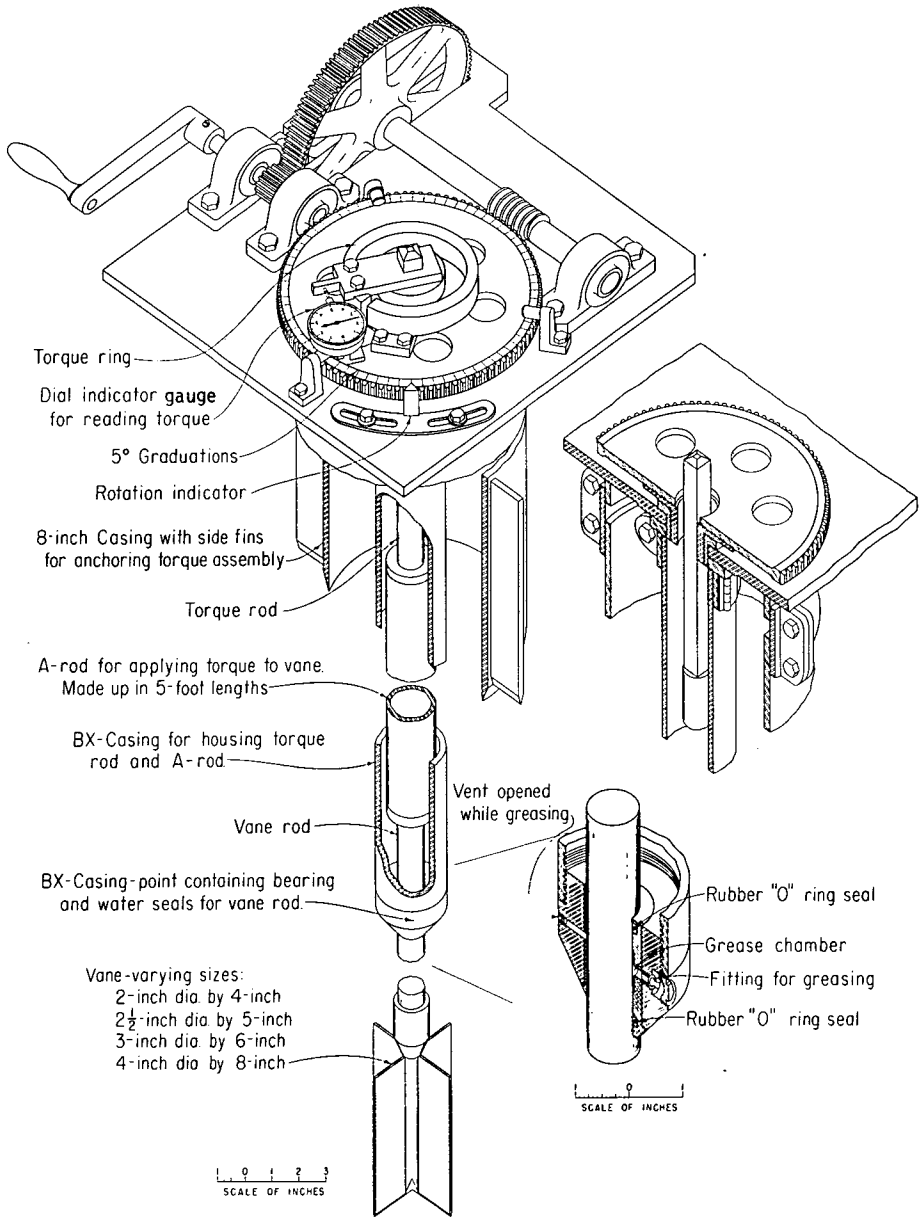

Figure 1. – Vane shear test apparatus.

6.1.1.1 The torque ring, 5 inches outside diameter, 1 inch high, and 0.57 inch thick (127 by 25 by 14.5 mm, respectively), is used to apply a balanced moment that does not result in a side thrust to the vane rod. No thrust bearing is required. The ring has a section cut from it and will deform as torque is applied.

6.1.1.2 The deformation of the torque ring is measured by a dial indicator and the assembly is calibrated in foot-pounds of torque. The dial indicator gauge reads directly to 0.0001 inch (0.003 mm).

6.1.1.3. A 10-inch (250-mm) diameter gearwheel, to which the torque ring is secured, is geared to a crank handle which is operated at a controlled speed. The gearwheel is marked in degrees and has a pointer for indicating rotation.

6.1.1.4 An 8-inch (200-mm) pipe casing, 2 feet (600 mm) in length with side fins for embedding 1 foot (300 mm) into the surface of the ground, is used to anchor the torque applicator and provide the reaction force. Extensions of casing can be used to raise the level of the instrument and vary the depth of vane placement, or to raise the instrument above the level of surface water when necessary.

6.1.2 Torque is transmitted from the applicator to the vane through the vane rod stem which is composed of three sections.

6.1.2.1 The upper section of the stem is a square bar which passes through the torque applicator. The center section consists of standard 5-foot (1.5-m) lengths of A-size drill rod. The lower section is a 1-inch (25-mm) diameter stainless steel rod to which the vanes are attached.

6.1.2.2 The vane rod stem is enclosed in flush-coupled, 5-foot lengths of BX casing which are fitted with a watertight bearing at the lower end incorporating O-ring seals and a grease chamber.

6.1.2.3 When adequately tightened, the A-rod will not slip during torque application. Special short pieces of A-rod and BX casing can be used to vary the 5-foot testing depth interval.

6.1.3 Rectangular vanes are available in four sizes: 4 inches in diameter by 8 inches long (102 by 203 mm), 3 inches by 6 inches (76 by 152 mm), 2-1/2 inches by 5 inches (64 by 127 mm), and 2 inches by 4 inches (51 by 102 mm).

6.1.3.1 The modified vane, illustrated on figure 2, is constructed to allow a definite amount of free rotation to determine the rod/soil and equipment friction correction for each test prior to applying force to the vane.

6.1.3.2 A rigid vane rod stem coupling is available for special uses, but requires separate determinations of friction using a blank stem or assumed friction corrections in order to interpret results.

7. Reagents and Materials

7.1 If performance of the test necessitates the use of drilling additives for advancing the test boring, appropriate local, State, and Federal guidelines and regulations should be consulted.

8. Precautions

8.1 *Safety Precautions.*–Performance of the test usually involves use of a drill rig; therefore, safety requirements as outlined in the document cited under subparagraph 3.3, or in other applicable safety standards, should be observed.

8.2 *Technical Precautions:*

8.2.1 The instrument is a precision testing apparatus and must be checked, protected, and handled with care during use, transportation, and storage to ensure proper calibration and operation.

8.2.2 The torque applicator will permit observations from 0 to 200 ft·lbf (0 to 270 N·m). This limitation must not be exceeded.

8.2.3 The water seals in the lower bearing should be greased periodically and at least once for every test hole.

8.2.4 The distance that the vane is pushed into undisturbed soil is 30 inches (760 mm), which allows about a 3-inch (76-mm) clearance on the lower A-rod reducer above the BX bearing point. This reducer must not be allowed to ride on the bearing during testing.

8.2.5 The swivel of the modified vane is fully enclosed when assembled; however, the internal parts should be clean and well greased. Presence of the 3/16-inch (4.8-mm) ball support of the modified vane swivel, which is fitted in the hole in the vane rod (fig. 2), should be checked and care taken not to lose the ball during disassembly. A cap should be used to cover the rod end when a vane is not attached.

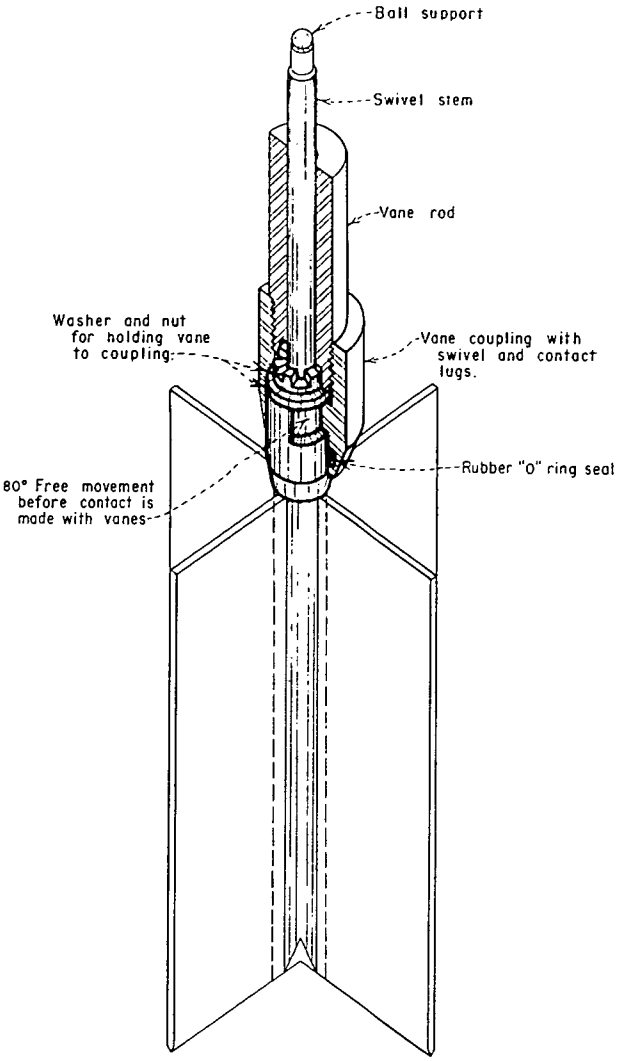

Figure 2. – Modified vane for friction determination.

8.2.6 Vanes and the vane rod stem should be checked for straightness. When using the modified vanes, rod friction observations of more than 25 ft·lbf (34 N·m) are indicators of off-center movement and possible binding of the vane rod stem.

8.2.7 The size of vane selected should be the largest suitable for the anticipated soil conditions.

- The 4-inch (102-mm) diameter vane is limited to obtaining undrained shear strength values from 0 to 10 lbf/in² (0 to 69 kPa), and is recommended for very soft saturated soils.
- The 3-inch (76-mm) diameter vane is limited to obtaining undrained shear strength values from 0 to 24 lbf/in² (0 to 165 kPa) and is recommended for soft to moderately firm saturated soils.

- The 2-1/2-inch (64-mm) diameter vane is limited to obtaining undrained shear values from 0 to 40 lbf/in^2 (0 to 275 kPa) and is recommended for moderately firm saturated soils.
- The 2-inch (51-mm) diameter vane, although used infrequently, is intended for firm saturated soils.

9. Calibration and Standardization

9.1 For each vane shear testing apparatus, a calibration curve of foot-pounds of torque versus dial indicator gauge difference, in 0.0001 of an inch (0.003 mm), is established. An example of such a calibration curve is shown on figure 3.

9.2 Vane shear instruments are individually calibrated in the Research and Laboratory Services Division laboratories and should be checked prior to and following a specific testing program. Also, the calibration should be checked periodically if the program is extensive or if damage to the instrument is suspected.

10. Conditioning

10.1 Not applicable, special conditioning requirements are not needed for this procedure.

11. Procedure

11.1 *Installation Procedure.*-The equipment is installed as illustrated on figure 4 and according to the following steps:

11.1.1 Drive or press the 8-inch (200-mm) anchor casing approximately 1 foot (300 mm) into the soil. If necessary, the casing can be installed in a prepared hole of lesser diameter than its outside diameter. Remove soil from within the casing. The level of the top of the casing may be varied by a few inches, or extension lengths may be added to permit the vanes to be located at the desired depth.

11.1.2 Assemble the vane rod stem with the vane on the lower end, the lower watertight bearing on the 1-1/8-inch (29-mm) diameter rod, and first sections of A-rod and BX casing. Tighten all vane rod and A-rod couplings in excess of 200 ft·lbf (270 N·m), which is the capacity of the equipment, to prevent slippage during the test.

11.1.3 With the vane held firmly in the "up" position (vane coupling touching the BX casing bearing point), install the assembled vane rod stem to a depth of 30 inches (760 mm) above the depth at which the undrained shear strength is desired.

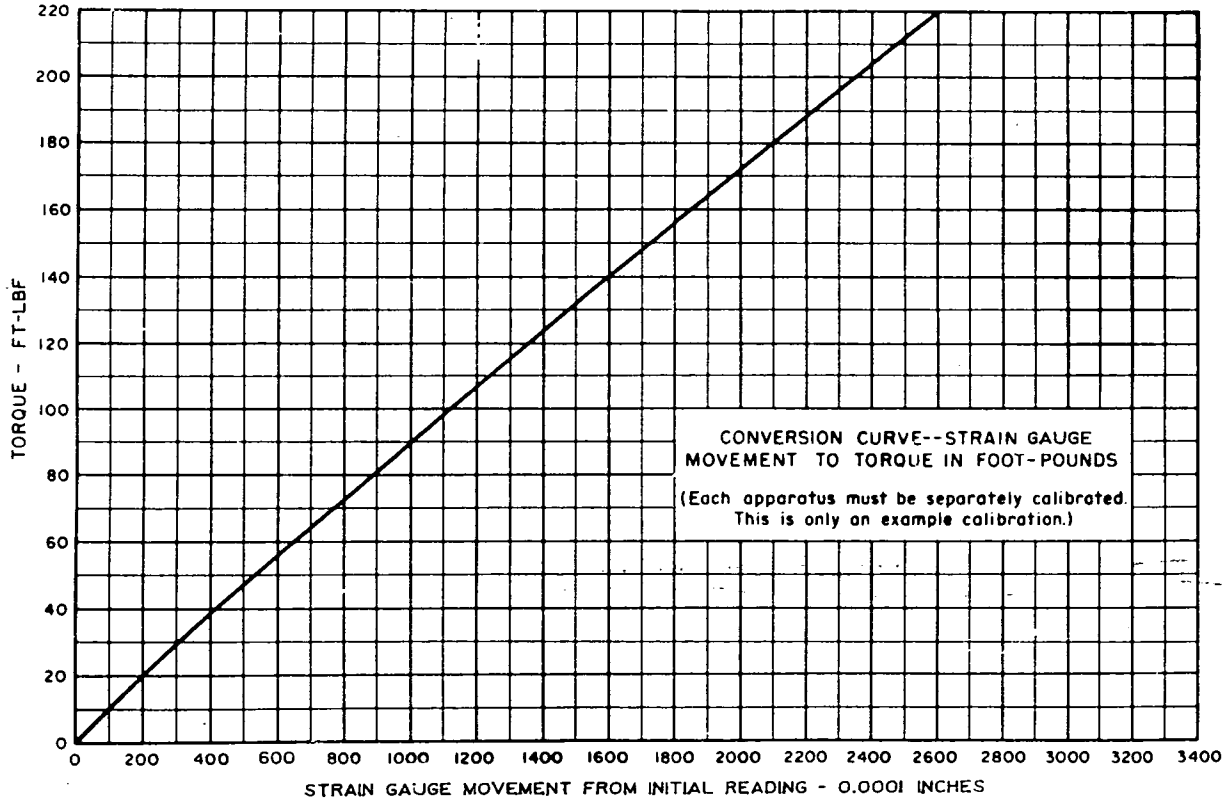

Figure 3. – Typical calibration curve for a vane shear test apparatus.

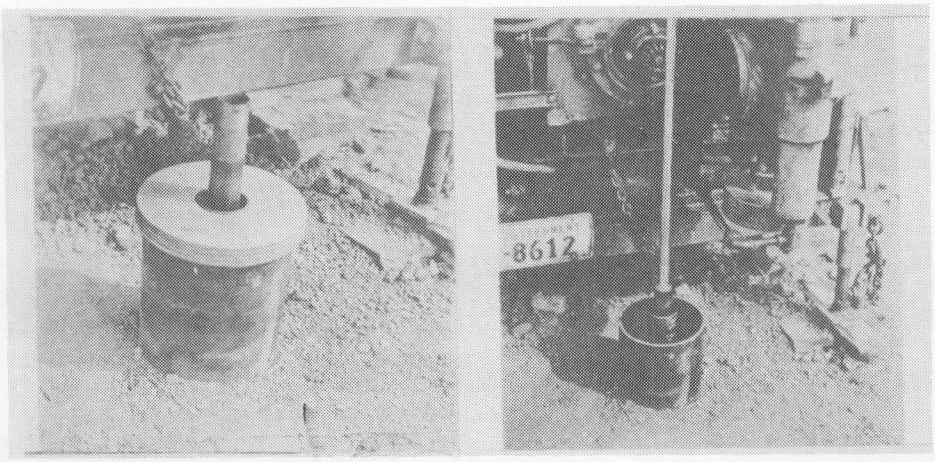

(a) Install 8-inch anchor casing and press vane stem to position.

(b) Install upper square vane rod and press vanes 30 inches into undisturbed soil.

(c) Install torque assembly.

(d) Test is ready to begin.

Figure 4. – Method of installation of the vane testing apparatus.

11.1.4 In soft soil, the vane rod stem can be pressed for short distances into the ground without boring a hole; however, when overlying strata are relatively firm or substantial testing depths are involved, a predrilled hole is necessary. Drilling fluids or a 4- to 6-inch (100- to 150-mm) casing may be needed to support the hole above the placement depth.

11.1.5 Testing can be expedited by using the adapter shown on figure 5, which permits the vane rod stem to be used as a rotary drilling tool during placement. Drilling fluid is circulated through the BX casing, a ported lower bearing, and discharged from a hard-faced cutting bit. During operation, the vane is retracted and held inside the bit. The coupling device for securing the vane is attached to the top of the BX casing and contains screws which are tightened against the A-rod. It also serves as a connection to standard fittings for the drilling fluid hose and hoisting plug. The entire vane assembly, functioning as a rotary drilling tool, can be used to advance the hole to within about 3 to 9 inches (76 to 230 mm) of the required final depth of the bit. In very soft soil, the stem can be used as a wash boring tool, without rotary action, which can be useful when a drill rig is unavailable. To prevent excessive washing, care must be taken to stop the flow of fluid prior to reaching the desired drilling depth. Final placement of the bit is achieved by pressing it into the bottom of the hole.

11.1.6 The vane is advanced to the desired testing depth using a steady moderate rate of penetration from the drill rig. Hammering or excessive up and down forces should not be applied since disturbance and/or damage to the vane will usually occur. When lowering the vane into a predrilled test hole, or pressing to a greater depth, it is important to maintain the vane in the "up" position so as to minimize the possibility of deviation from the vertical.

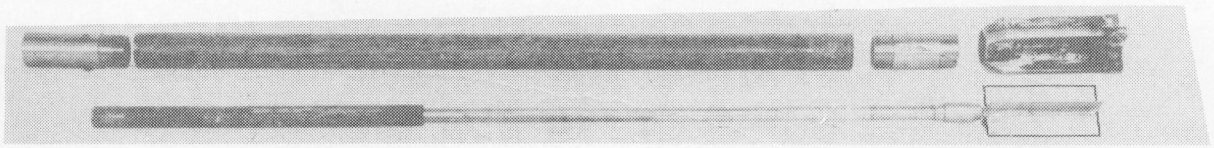

(a) Disassembled

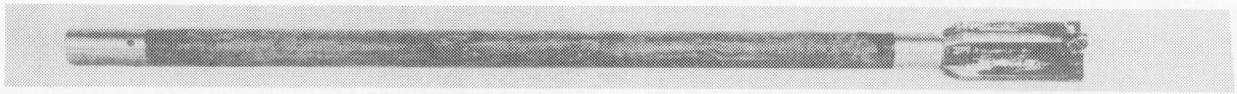

(b) Assembled and vane retracted

(c) Assembled and vane extended

Figure 5. – Rotary cutting bit for use with the vane shear test apparatus

11.1.7 The BX casing is placed with its top 1-3/8 to 2 inches (35 to 50 mm) above the 8-inch (200-mm) casing with the first section of A-rod of such length that it extends a similar distance above the BX casing. These extensions allow space for the use of wrenches for installing the instrument and for adding additional standard lengths of BX casing and A-rod for subsequent testing depths.

11.1.8 Attach and tighten the upper square section of the vane rod stem. If the modified vane is used, set it to permit free rotation for the friction determination which is accomplished by turning the square bar and the rod counterclockwise with a wrench until touching of the vane lugs is felt. Only about 10 to 20 ft·lbf (15 to 30 N·m) are required.

11.1.9 Press the vane rod stem 30 inches (760 mm) to place the vane into undisturbed soil and at the desired testing depth. The minimum acceptable pressing depth is 18 inches (460 mm) if the above recommended distance is not applicable.

11.1.10 Place the torque applicator over the square bar, rest it on the BX casing, and tighten the BX clamp. The bar must be free in the square hole for the zero reading and can be checked by rattling the rod. Clamp the baseplate securely to the 8-inch (200-mm) anchor casing so that it is sufficiently tight to resist the maximum torsional force applied by the instrument.

11.2 *Test Procedure*:

11.2.1 All data are to be recorded on the "Field Vane Shear Test Data" form and "Field Vane Shear Test Plot" as shown on figures 6 and 7, respectively.

11.2.2 Obtain the initial readings of the dial indicator and rotation indicator after checking the rod for looseness (zero torque) and taking up the slack within the system.

11.2.3 Throughout the test, when readings are obtained, the vane rod stem is rotated at a rate of 0.1 degree per second (hereafter referred to as the standard rate) and dial indicator readings taken at intervals of every 5° of rotation. The standard rate is obtained by turning the crank at a uniform rate of 12 turns per minute (1 revolution of the crank per 5 seconds).

11.2.4 Using the standard rate, determine the friction correction by obtaining six dial indicator readings during the initial 30° of rotation prior to engaging the vane. A more rapid rotation, without readings, can be used to complete the remaining free movement of the vane rod stem. Care should be taken by the operator, through observation of the dial indicator, to ensure that the standard rate is resumed upon engaging the vane.

11.2.5 Determine the undisturbed undrained shear strength of the soil by maintaining the standard rate of rotation and reading the dial indicator at 5° intervals and at the angle when the maximum dial indicator reading is observed. After the maximum value is reached, take five additional readings at 5° intervals.

11.2.6 Following the readings for determination of the undisturbed undrained shear strength, rotate the vane rapidly through an angle of 360° without taking dial indicator readings.

11.2.7 Determine the remolded undrained shear strength by obtaining five readings at 5° intervals using the standard rate. Additional remolded undrained shear strength determinations can be made if required.

11.2.8 Upon completion of remolded readings, reverse the direction of rotation of the crank and obtain a no-load reading to check the initial zero.

12. Calculations

12.1 For vanes whose diameters are one-half their length, the equation relating shear stress (which is equal to the undrained shear strength) to measured torque,

assuming a uniform shear stress distribution across the ends and around the perimeter of the failure cylinders, is:

$$S = \frac{3\,T}{28\pi R^3} = \frac{6T}{7\pi D^3}$$

where:

S = shear stress = undrained shear strength, lbf/in²
T = torque at failure (undisturbed or remolded), in·lbf
R = radius of the failure cylinder sheared by the vane (radius of vane), in
D = diameter of the failure cylinder sheared by the vane (diameter of vane), in

See appendix X1 for derivation of above equation.

Example: Undisturbed test (figs. 6 and 7)

Maximum dial gauge reading, 0.0001 in = 3164
Friction gauge reading, 0.0001 in = 1373
Difference, 0.0001 in = 1791

Calibration (fig. 3) torque, T = 1872 in·lbf = 156 ft·lbf
Radius of vane (3-in diameter vane) = 1.5 inches

$$\text{Shear stress, } S = \frac{3T}{28\pi R^3} = \frac{3\,(1872)}{28\pi\,(1.5)^3} = 18.9 \text{ lbf/in}^2$$

13. Report

13.1 The report is to consist of the completed and checked:

"Field Vane Shear Test Data" form (fig. 6).
"Field Vane Shear Test Plot" (fig. 7).

13.2 All calculations are to show a checkmark and all plotting must be checked.

7-2422 (5-89) Bureau of Reclamation	FIELD VANE SHEAR TEST DATA		Designation USBR 7115 - 89
PROJECT Example	FEATURE Example		LOCATION N-381,152 E-1,825,984
GROUND ELEVATION	HOLE NUMBER DH-202		DEPTH 60 ft.
WATER TABLE ELEVATION 4199.6	VANE DIAMETER 3-inch		TESTED BY DATE

ROTATION INDICATOR (DEGREES)	DIAL INDICATOR GAUGE READINGS	ROTATION INDICATOR (DEGREES)	DIAL INDICATOR GAUGE READINGS
Initial : 80	1216	Remolded 360	
85	1360	205	2220
90	1360	210	2245
95	1363	215	2244
100	1367	220	2235
105	1369	225	2225
110	1373	No load	1287
145	START		
150	1690		
155	2040		
160	2370		
165	2650		
170	2900		
175	3110		
178	3164		
180	3100		
185	2970		
190	2860		
195	2758		
200	2685		

REMARKS Dial indicator guage readings shown are 0.0001 inches.

Figure 6. – Field vane shear test data — example.

7-2423 (5-69)
Bureau of Reclamation

FIELD VANE SHEAR TEST PLOT

Designation USBR 7115 - 89

PROJECT: Example	FEATURE: Example	LOCATION: N-381,152 E-1,825,984
VANE SIZE: 3×6 inch	HOLE NUMBER: DH-202	DEPTH: 60 ft.

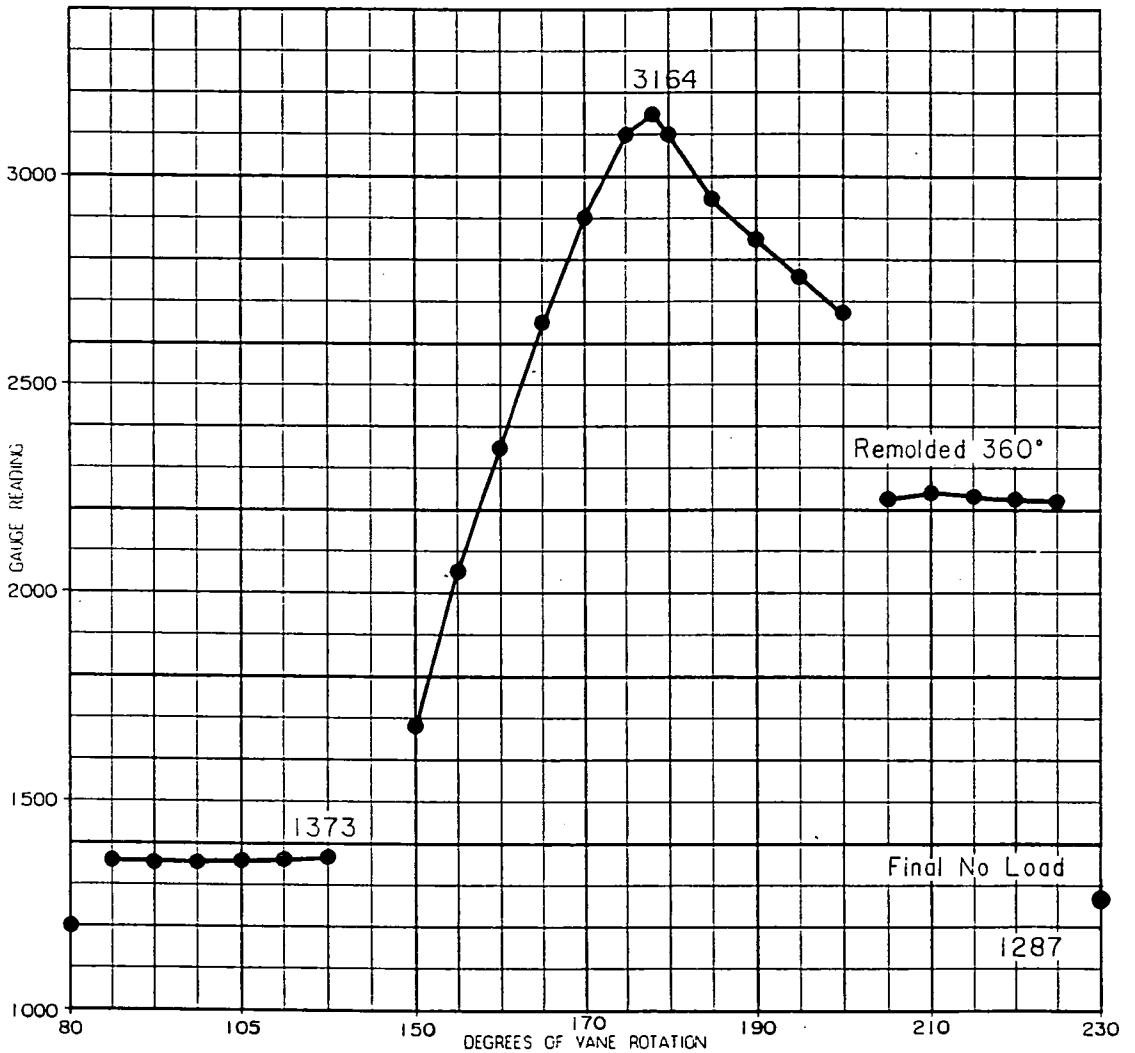

	UNDISTRUBED	REMOLDED 360°		
GAUGE READING	3164	2225		
FRICTION GAUGE READING	1373	1373		
DIFFERENCE	1791	852		
TORQUE	156 ft•lbf	77 ft•lbf		
SHEAR STRESS	18.9 lbf/in^2	9.3 lbf/in^2		

Figure 7. – Field vane shear test plot — example.

APPENDIX

X1. TORQUE EQUATION

X1.1 Torque

The derivation of the equation relating undrained shear strength to measured torque is shown below.

Assume a uniform shear stress distribution across the ends and around the perimeter of the failure cylinder.

$$\text{Total torque, } T = T_1 + 2T_2$$

where:

T_1 = torque resistance on the vertical cylindrical surface

T_2 = torque resistance on the horizontal top and bottom, assuming constant unit shear resistance

$T_1 = S\,(\text{area})\,(\text{moment arm}) = S\,(2\pi RH)R$

$T_1 = 2\pi R^2 HS$

where: R = radius of the cylindrical shear surface formed by rotation of the vane

H = height of the vane

S = undrained shear strength

$T_2 = S\,(\text{area})\,(\text{moment arm})$

Consider an element of area $dr\ (r\ d\theta)$, with undrained shear strength, S, and moment arm, r:

$$T_2 = \int_0^R \int_0^{2\pi} Sr^2\, d\theta\, dr$$

$$T_2 = 2\pi S \int_0^R r^2\, dr$$

$$T_2 = 2\pi S \left(\frac{R^3}{3}\right)$$

$$T = T_1 + 2T_2$$

$$T = 2\pi R^2 HS + 2\left(2\pi S \frac{R^3}{3}\right)$$

$$T = 2\pi S \left(R^2 H + \frac{2R^3}{3}\right)$$

and

$$S = \frac{T}{2\pi\left(R^2 H + \frac{2R^3}{3}\right)}$$

For the special case when the height, H, is twice the diameter, D:

$$S = \frac{3T}{28\pi R^3} = \frac{6T}{7\pi D^3}$$

UNITED STATES DEPARTMENT OF THE INTERIOR
BUREAU OF RECLAMATION

USBR 7205-89

PROCEDURE FOR

DETERMINING UNIT WEIGHT OF SOILS IN-PLACE BY THE SAND-CONE METHOD

INTRODUCTION

This procedure is under the jurisdiction of the Geotechnical Services Branch, code D-3760, Research and Laboratory Services Division, Denver Office, Denver, Colorado. The procedure is issued under the fixed designation USBR 7205. The number immediately following the designation indicates the year of acceptance or the year of last revision.

1. Scope

1.1 This designation outlines the procedure for determining the in-place unit weight of soils using sand poured with a cone apparatus to determine the volume of a test hole.

1.2 Two procedures are provided.

1.2.1 Method A — In-place unit weight of total material.

1.2.2 Method B — In-place unit weight of control fraction.

1.2.2.1 If the in-place soil contains particles larger than the maximum particle size permitted in the laboratory unit weight test(s), the soil is considered to consist of two fractions, or portions. The soil from the in-place unit weight test is physically divided into a control fraction and an oversize fraction based on a designated sieve size. The unit weight of the control fraction is calculated and compared with the unit weight(s) established by the standard laboratory test(s).

1.2.2.2 Normally, the control fraction is the minus U.S.A. Standard series No. 4 (4.75-mm) sieve size material for cohesive soils and the minus 3-inch (75-mm) sieve size material for cohesionless soils.

1.2.3 Method A is used when the in-place unit weight of total material is to be determined regardless of particle sizes. If there is no oversize present, the in-place unit weight of the total material can be compared to the laboratory unit weight(s) directly.

1.2.4 Method B is used when the soil being tested contains 3 percent or more oversize.

1.3 USBR 7205 is only applicable for soils containing 20 percent or less particles retained on the 1-1/2-inch (37.5-mm) sieve.

1.4 Any soil or other material that can be excavated with handtools can be tested provided the void or pore openings in the mass are small enough to prevent the calibrated sand used in the test from entering the natural voids. The soil or other material being tested should have sufficient cohesion or particle attraction to maintain stable sides on a small hole or excavation. It also should be firm enough not to deform or slough due to the minor pressures exerted in digging the hole and placing the sand-cone apparatus over it.

1.5 Generally, this method is limited to soil in an unsaturated condition and is not recommended for soils that are soft or friable (crumble easily) or in a moisture condition such that water seeps into the hand-excavated hole. The accuracy of the test may be affected for soils that deform easily or that may undergo a volume change in the excavated hole from standing or walking near the hole during the test.

2. Auxiliary Tests

2.1 The moisture content of the soil must be determined in accordance with USBR 5300 in order to calculate dry unit weight values. The bulk specific gravity of any oversize material must be determined in accordance with USBR 5320 in order to calculate the volume of the oversize removed from the test hole.

3. Applicable Documents

3.1 *USBR Procedures*:

USBR 1435 Calibrating Sand-Cone Equipment and Sand
USBR 3900 Standard Definitions of Terms and Symbols Relating to Soil Mechanics
USBR 5205 Preparing Soil Samples by Splitting or Quartering
USBR 5300 Determining Moisture Content of Soil and Rock by the Oven Method
USBR 5320 Determining Specific Gravity of Soils
USBR 5525 Determining the Minimum Index Unit Weight of Cohesionless Soils
USBR 5530 Determining the Maximum Index Unit Weight of Cohesionless Soils
USBR 7220 Determining Unit Weight of Soils In-Place by the Sand Replacement Method in a Test Pit
USBR 7221 Determining Unit Weight of Soils In-Place by the Water Replacement Method in a Test Pit
USBR 7240 Performing Rapid Method of Construction Control
USBR 7250 Determination of Percent Relative Density
USBR 7255 Determining the Percent Compaction of Earthwork for Construction Control.

3.2 *ASTM Standard*:

E 11 Specification for Wire-Cloth Sieves for Testing Purposes

4. Summary of Method

4.1 Soil is excavated from a test hole in a designated area and collected. Calibrated sand is poured into the test hole using sand-cone equipment to determine the volume of the test hole. The wet unit weight of the in-place soil is calculated using the mass of soil removed and the measured volume of the test hole. The moisture content is determined; and, subsequently, the dry unit weight of the sample is calculated.

4.2 The unit weight of a fraction of the soil can be determined by subtracting the mass and volume of any oversize from the initial values and recalculating the unit weight.

5. Significance and Use

5.1 This method is widely used to determine the unit weight of compacted soils in construction of earth embankments, road fill, and structure backfill. For construction control, it is often used as the basis for acceptance of soil compacted to a specified unit weight or to a percentage of a maximum unit weight determined by a standard laboratory test method.

5.2 This method can be used to determine in-place unit weight of natural soil deposits, aggregates, soil mixtures, or other similar material.

6. Terminology

6.1 Definitions are in accordance with USBR 3900.

6.2 Terms not included in USBR 3900 of particular significance are:

6.2.1 *Control Fraction.*–The portion of a soil sample consisting of particles smaller than a designated sieve size. This fraction is used to compare in-place unit weights with standard laboratory unit weights. The control sieve size depends on the laboratory test used.

6.2.2 *Oversize.*–The portion of a soil sample consisting of the particles larger than a designated sieve size.

7. Apparatus

7.1 *General Apparatus*:

7.1.1 *Balance or Scale.*–A typical balance or scale used for this designation must be readable to 0.01 lbm and have a capacity of about 100 lbm.

7.1.2 *Drying Oven.*–An oven, thermostatically controlled, preferably of the forced-draft type, and capable of maintaining a uniform temperature of 230±9 °F (100±5 °C) throughout the drying chamber.

7.1.3 *Sieves.*–U.S.A. Standard series No. 4 (4.75-mm) and 3-inch (75-mm) sieves, conforming to the requirements of ASTM E 11.

7.2 *Equipment Unique to This Procedure*:

7.2.1 *Sand-Cone Equipment.*–The sand-cone equipment consists of a sand-cone pouring device and template. The sand-cone pouring device consists of a reservoir, a 1-1/2-inch (37.5-mm) brass gas service cock (valve) with lever handle, and a conical funnel (cone) designed and machined to fit the template. The valve must have stops to prevent rotation past the completely open or completely closed positions; and the handle shall rotate from horizontal, downward to vertical to close. The equipment should generally conform to the requirements shown on figure 1. Standard type sand-cone pouring devices with varying cone diameters, valve sizes, and reservoir sizes are presently in use and are acceptable provided they will calibrate in accordance with USBR 1435. Variable cone designs such as the slope cone (fig. 2) and the haunch cone (fig. 3) are acceptable also for specialized use provided they are calibrated in accordance with USBR 1435. Cone designs — varying from those shown on figures 1, 2, and 3 — must be tested thoroughly by performing USBR 1435 and by actual in-place testing on soils of known unit weights. Design and testing must be documented and any new cone design must be approved by the Bureau's Denver Office before being used on USBR projects.

7.2.2 *Calibrated Sand.*–The sand must meet the requirements specified in USBR 1435.

7.3 *Miscellaneous Equipment.*–Shovel for preparing surface at test site; nails and hammer for anchoring template; assorted hand augers, small brush, picks, chisels, knife, and spoons for digging test hole; buckets with lids, seamless cans with lids, or other suitable containers for retaining the test sample and sand without moisture change; and assorted pans and porcelain dishes suitable for drying moisture content specimens.

8. Precautions

8.1 *Safety Precautions.*–This designation may involve hazardous materials, operations, and equipment.

8.2 *Technical Precautions*:

8.2.1 Soils that may flow or deform during the test must be identified and appropriate precautions taken.

8.2.2 Movement of heavy equipment in the immediate test area should not be permitted during the volume determination.

8.2.3 Errors may arise in the computed unit weight of soil due to the influence of excessive moisture in the soil. These errors may be significant in soils having high permeability such as sands and gravels where the bottom of the test hole is close to or below the water table. Errors may arise due to change in density of the calibrated sand as it becomes wetted from capillary or freestanding water while performing the test. This problem becomes evident when removing the calibrated sand from the test hole and wet sand is observed on the bottom or sides of the test hole.

9. Calibration and Standardization

9.1 Verify that equipment is currently calibrated in accordance with the applicable calibration procedure. If the calibration is not current, perform the calibration before using the equipment for this procedure.

9.2 The sand-cone equipment and calibrated sand shall be calibrated in accordance with USBR 1435.

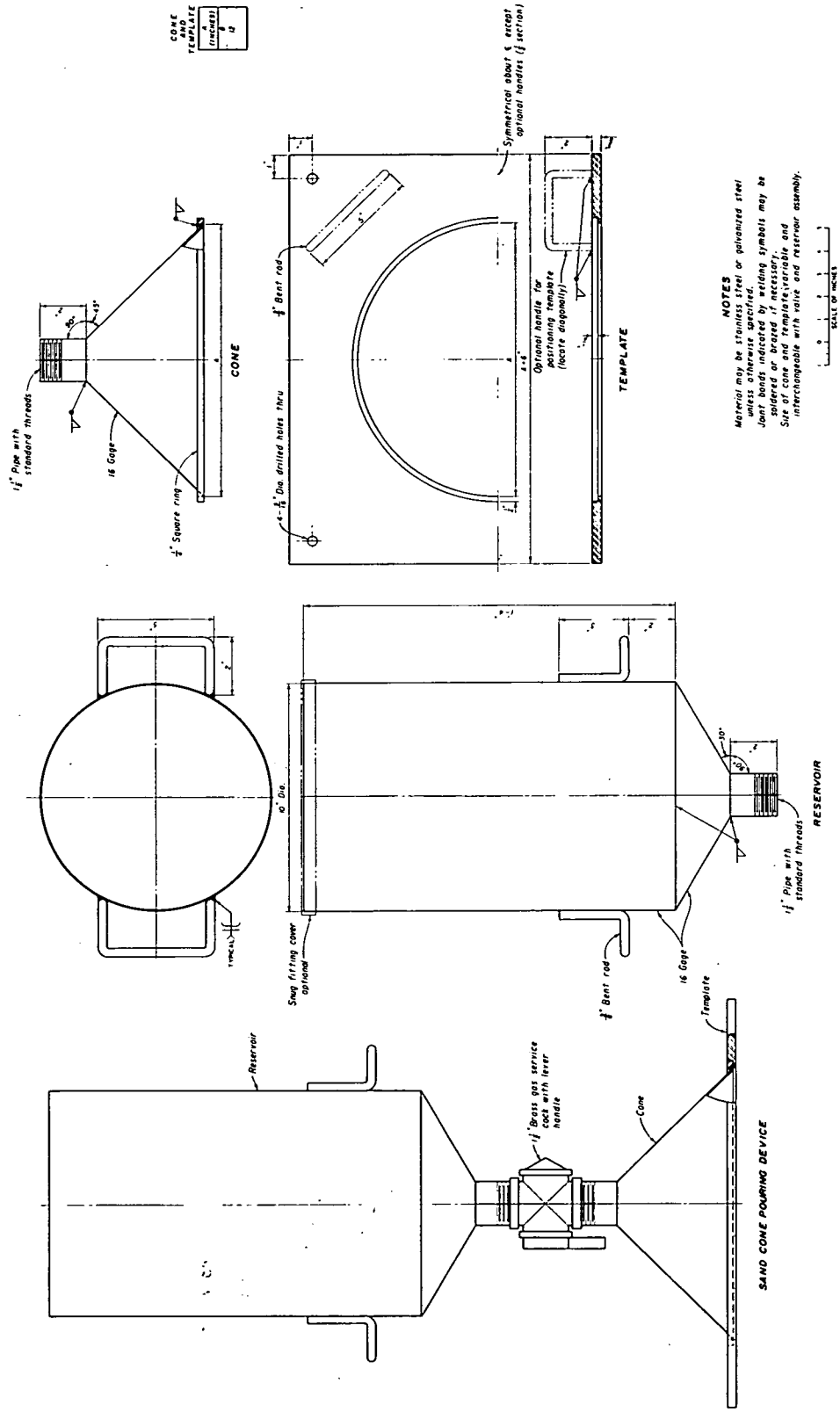

Figure 1. - Sand cone pouring device, reservoir, cone, and template. 801-D-225

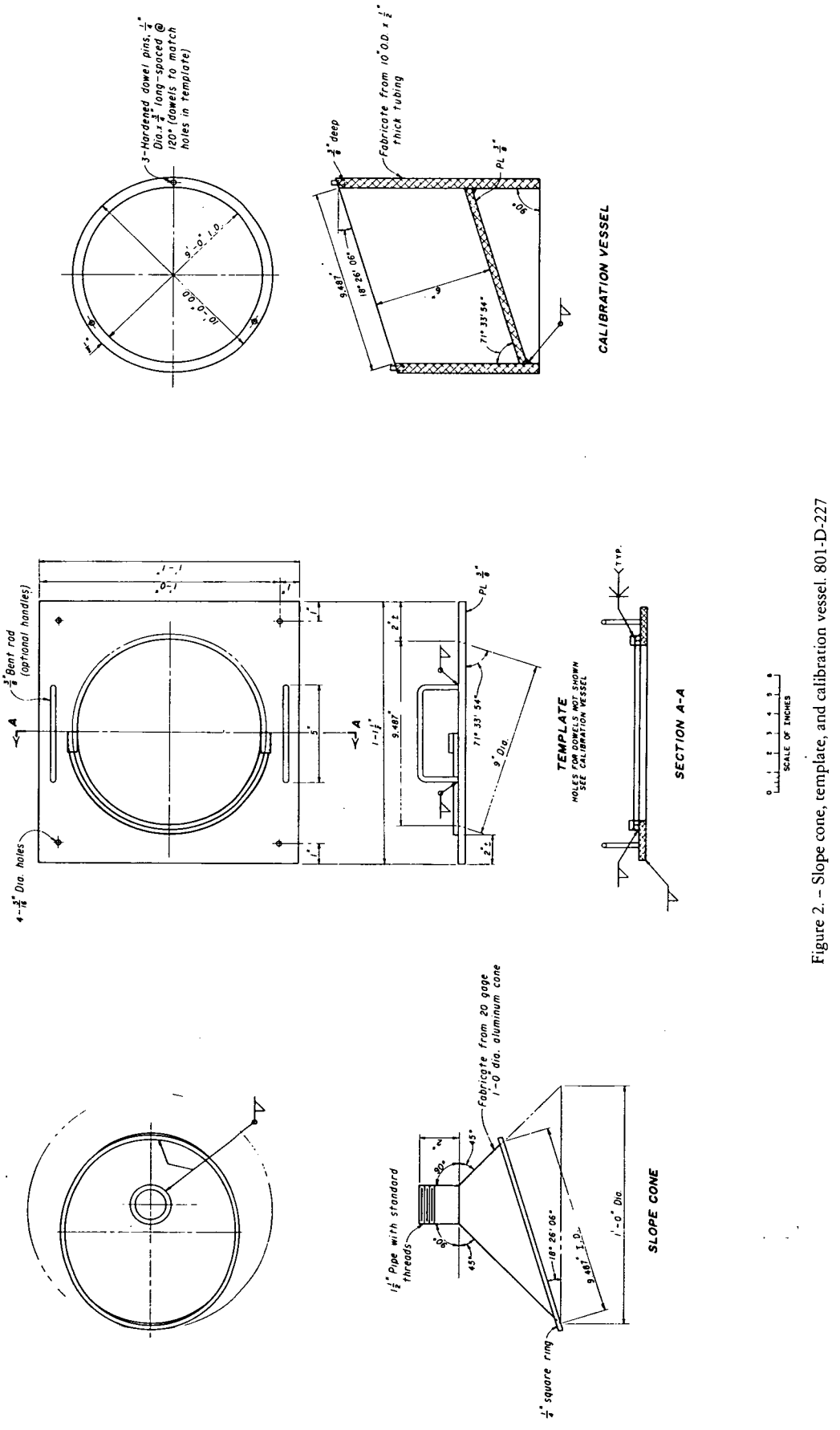

Figure 2. – Slope cone, template, and calibration vessel. 801-D-227

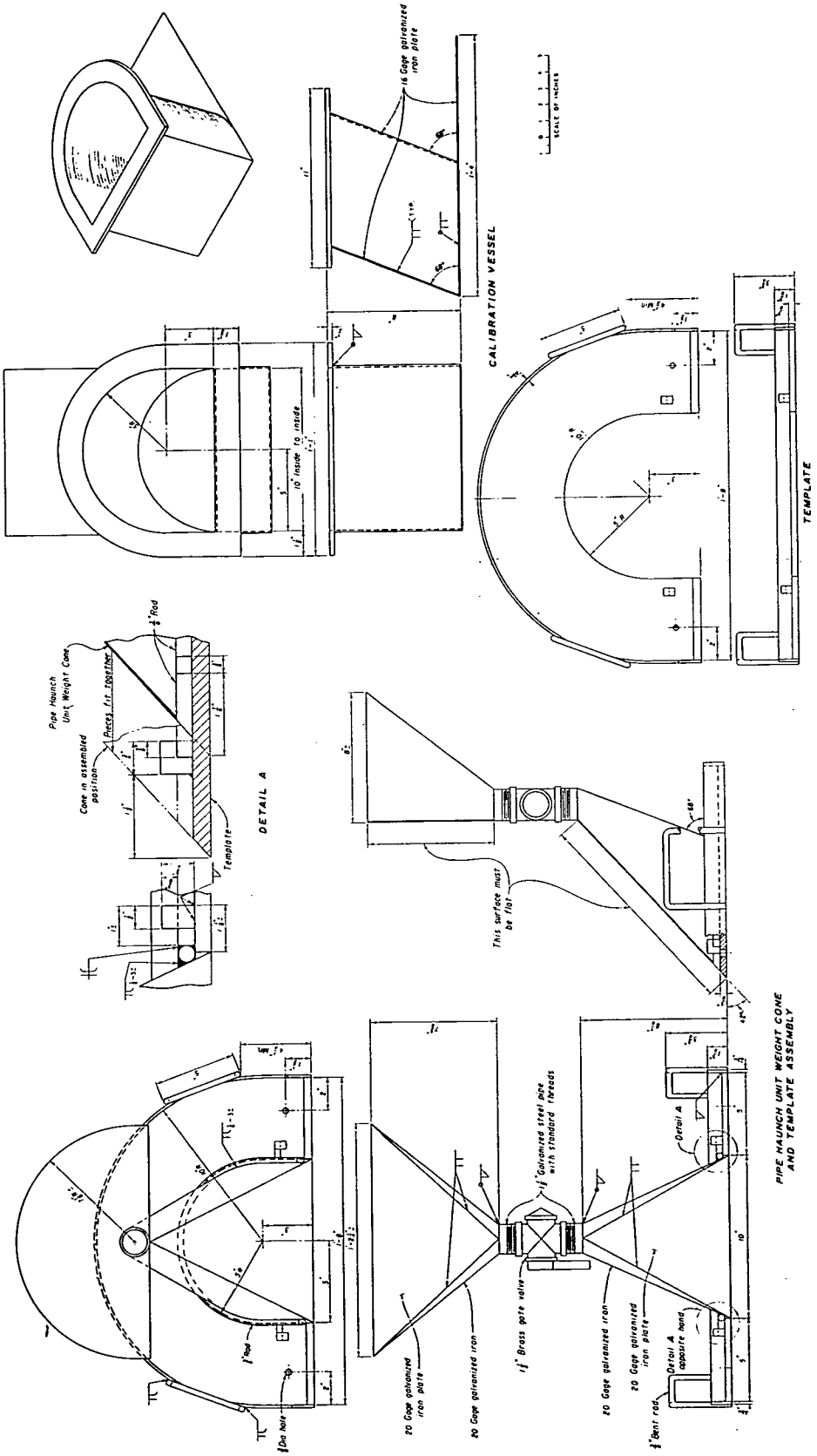

Figure 3. – Pipe haunch unit-weight cone — template, calibration vessel. 801-D-223

10. Procedure: Method A — In-Place Unit Weight of Total Material

10.1 All data are to be recorded on either the "In-Place Unit Weight Test Record" form as shown on figure 4, the "Rapid Method Test Record In-Place Unit Weight" form as shown on figure 5, or the "Relative Density Test Record" form as shown on figure 6.

10.2 Select the appropriate size sand-cone equipment, and determine the appropriate depth of test hole to be excavated based on information in appendix X1.

10.2.1 Prepare and record the initial mass of calibrated sand and container(s) to the nearest 0.01 lbm. Record the container number(s).

10.3 Prepare the surface of the area to be tested so that it is a firm, level plane. For the slope cone (see subpar. 7.2.1), the test area should be a firm, plane surface prepared at an angle so that the slope-cone device is vertical when placed in position for the test.

10.4 Personnel should not step on the area selected for testing. A working platform should be provided when testing soils which may flow or deform.

10.5 Seat the template on the prepared surface and secure with nails. Make sure there are no voids between the soil and the template.

10.6 Excavate the test hole.

10.6.1 Using handtools (chisel, knife, etc.) or a hand auger, excavate the center portion of the test hole using the template as a guide. The auger diameter must not exceed three-fourths of the template center hole diameter. Final trimming of the test hole must be done with handtools being careful to avoid disturbing the soil that bounds the test hole. An auger is not to be used for soils containing more than 20 percent of gravel-size particles.

10.6.2 Carefully trim the sides of the test hole so the diameter is the same as the diameter of the template hole at the soil-template contact.

10.6.3 The sides of the test hole should slope inward slightly from top to bottom. Soils with low cohesion may require a more conically shaped test hole.

10.6.4 The profile of the finished test hole must be such that the sand will completely fill the excavation when poured. The sides of the test hole should be as smooth as possible and free of pockets or overhangs or anything that might interfere with free flow of the sand.

10.6.5 The bottom of the test hole should be cleaned of all loosened soil.

10.7 Place all soil removed from the test hole in a container, being careful to avoid losing any soil.

NOTE 1.–A cloth with a hole slightly larger than the template center hole may be placed over the template to help locate and collect any loose soil.

10.7.1 Avoid soil moisture loss by keeping the container covered while soil is not being placed in it. A sealable plastic bag may be used inside the container to hold the soil.

10.8 Determine the volume of the test hole.

10.8.1 Seat the sand-cone pouring device on the template, carefully matching the marks established on both during the calibration procedure.

10.8.2 With the valve closed, pour a predetermined quantity of calibrated sand into the reservoir of the sand-cone pouring device. The mass of sand required is dependent on the size of test hole.

10.8.3 Open the valve with a single smooth motion, allowing the calibrated sand to flow into and fill the test hole, template, and cone. After the sand has stopped flowing, close the valve. Closure must be done quickly and smoothly to avoid jarring the equipment.

10.8.3.1 While the sand is flowing, any vibrations in the test area must be avoided. The movement of heavy equipment in the immediate test area should not be permitted. Vibration during the volume determination may increase the density of the poured sand and decrease the accuracy of the test.

10.8.4 Remove the sand-cone pouring device. Pour the unused portion of calibrated sand (residue) into the original sand container(s). Open the valve to allow sand trapped in the valve to flow into the sand container.

10.8.5 If the calibrated sand is to be reclaimed, remove the used sand from the test hole and place it into a specially marked container.

10.8.6 Remove the template.

10.9 Determine the dry unit weight.

10.9.1 Determine and record to the nearest 0.01 lbm the mass of sand residue and container(s).

10.9.2 Calculate and record to the nearest 0.01 lbm the mass of sand used to fill the test hole, template, and cone.

10.9.3 Record the mass of calibrated sand contained in the template and cone (determined in USBR 1435) to the nearest 0.01 lbm. Record the template and sand-cone pouring device number.

10.9.4 Calculate and record to the nearest 0.01 lbm the mass of calibrated sand used to fill the test hole.

10.9.5 Record to the nearest 0.1 lbm/ft^3 the density of calibrated sand (determined in USBR 1435).

10.9.6 Calculate and record to the nearest 0.0001 ft^3 the volume of the test hole.

10.9.7 Determine and record to the nearest 0.01 lbm the mass of the excavated soil and container(s).

10.9.8 Record to the nearest 0.01 lbm the mass of the container(s) used to hold the excavated soil [usually predetermined and marked on container(s)]. Record the container number(s).

10.9.9 Calculate and record to the nearest 0.01 lbm the mass of the excavated soil.

10.9.10 Calculate the wet density of the excavated soil to the nearest 0.1 lbm/ft^3.

10.9.11 Convert wet density to wet unit weight by changing lbm/ft^3 to lbf/ft^3 (assume 1 lbf = 1 lbm) and record to the nearest 0.1 lbf/ft^3.

10.9.12 If the excavated soil contains oversize [normally larger than the No. 4 (4.75-mm) sieve for cohesive soils and 3-in (75-mm) sieve for cohesionless soils], separate the material using the appropriate size sieve.

7-1425 (12-85) Bureau of Reclamation

IN PLACE UNIT WEIGHT TEST RECORD

Designation USBR 7205-89

SAMPLE NO. Example		FEATURE		PROJECT	
TEST NO.		SOURCE OF MATERIAL			
LOCATION		OFFSET	ELEV.		ZONE
TESTED BY	DATE	COMPUTED BY	DATE	CHECKED BY	DATE

(1) Mass-Sand & Can(s), No(s). 1 . . . . . 40.00 . lbm

(2) Mass-Sand Residue & Can(s) . . . . . 9.41 . lbm

(3) Mass-Sand used, (1) - (2) . . . . . 30.59 . lbm

(4) Mass-Sand in Template[a] & Cone, No. 3 . . . 4.03 . lbm

(5) Mass-Sand in Hole, (3) - (4) . . . . . 26.56 . lbm

(6) Density of Calibrated Sand . . . . . 98.6 . lbm/ft^3

(7) Vol. of Hole, $\frac{(5)}{(6)}$ . . . . . 0.2694 ft^3

(8) Mass-Wet Soil, Oversize & Can(s) . . . . . 39.18 . lbm

(9) Mass-Can(s), No(s). 2 . . . . . 2.00 . lbm

(10) Mass-Wet Soil & Oversize (8) - (9) . . . . 37.18 . lbm

(11) Wet Unit Weight Soil & Oversize $\frac{(10)}{(7)}$ . . 138.0 . lbf/ft^3

(12) Dry Unit Weight Soil & Oversize,

$\frac{(11)}{1 + [(28)/100]}$ . . . . . lbf/ft^3

lbf/ft^3 x 0.1571 . . . . . kN/m^3

(13) Mass-Wet Oversize[b] & Pan . . . . . 7.20 . lbm

(14) Mass-Pan, No. 4 . . . . . 2.14 . lbm

(15) Mass Wet Oversize[b] (13) - (14) . . . . . 5.06 . lbm

(16) Mass-Oversize in Water . . . . . 3.17 . lbm

(17) Volume of Oversize[b] $\frac{(15) - (16)^*}{62.4}$ . . . . . 0.0303 ft^3

(18) Sp. G. of Oversize[b] $\frac{(15)}{[(15) - (16)]}$ . . . . . 2.68 . . . .

(19) Mass-Dry Oversize & Pan . . . . . 8.02 . lbm

(20) Mass-Pan, No. 5 . . . . . 3.01 . lbm

(21) Mass-Oven Dry Oversize (19) - (20) . . . . . 5.01 . lbm

* Or $(17)_A$ by measuring the water displaced from a siphon can, then;

$(18)_A = \frac{(15)}{(17) \times 62.4}$

(22) Moisture Content, Oversize, w_{os}

$\frac{(15) - (21)}{(21)} \times 100$ . . . . . 1.0 %

(23) Mass-Wet Soil, (10) - (15) . . . . . 32.12 lbm

(24) Wet Unit Weight of Soil, $\frac{(23)}{(7) - (17)}$ . . . . . 134.3 lbf/ft^3

(25) Mass-Dry Soil, $\frac{(23)}{1 + (w_f/100)}$ . . . . . 27.98 lbm

(26) Mass-Dry Soil & Oversize (25) + (21) . . . . . 32.99 lbm

(27) Percentage of Oversize, $\frac{(21)}{(26)} \times 100$ . . . . . 15.2 %

(28) Moisture Content, Soil & Oversize, w

$\frac{(10) - (26)}{(26)} \times 100$ . . . . . 12.7 %

(29) Dry Unit Weight, Control Fraction

$\frac{(24)}{1 + (w_f/100)}$ . . . . . 117.0 lbf/ft^3

lbf/ft^3 x 0.1571 . . . . . 18.4 kN/m^3

Moisture Content Determination	CONTROL FRACTION	
(1) Mass-Wet Soil & Dish	433.0	g
(2) Mass-Dry Soil & Dish	396.0	g
(3) Mass-Dish No. 10	146.0	g
(4) Mass-Water (1) - (2)	37.0	g
(5) Mass-Dry Soil (2) - (3)	250.0	g
(6) Moisture Content $\frac{(4)}{(5)} \times 100$	w_f 14.8	%

Soil Classification _____

REMARKS _____

AUXILIARY TESTS: USBR 1435 - 89, 1436 - --, 5300 - 89, 5320 - 89, 5505 - --

(a) Template Calibration USBR 7220
(1) Mass-Sand & Can(s) No. 6 . . . . . 50.50 lbm
(2) Mass-Sand Residue & Can(s) . . . . . 46.47 lbm
(3) Mass-Sand in Template (1) - (2) . . . . . 4.03 lbm

(b) Surface dried condition

Figure 4. - In-place unit weight test record — example.

7-2092A (12-86)
Bureau of Reclamation

RAPID METHOD TEST RECORD
IN-PLACE UNIT WEIGHT

Designation USBR 7240- _ _

PROJECT Example FEATURE USBR 7205-89 NO. ___ FILL _____ NO. ___

TESTED BY _____ DATE _____ COMPUTED BY _____ DATE _____ CHECKED BY _____ DATE _____

①

MO.	DAY	SHIFT (A-DAY, B-SWING, C-GRAVE)	TEST NO.	TYPE (R=REG., C=CONG., D=DOUBT)	STATUS (A-ACC., R-REJ.)	BORR. AREA NO.	STD. COMP. METHOD	SOIL CLASS	STATION	OFFSET	ELEV.

IN-PLACE UNIT WEIGHT DATA

(1) MASS-SAND & CAN NO. 1 — 40.00 lbm
(2) MASS-SAND RESIDUE & CAN — 9.41 lbm
(3) MASS-SAND USED, (1)-(2) — 30.59 lbm
(4) MASS-SAND IN TEMPLATE & CONE, NO. 3 — 4.03 lbm
SEE BACK SIDE FOR FIELD DETERMINATION - USBR 7220
(5) MASS-SAND IN HOLE, (3)-(4) — 26.56 lbm
(6) DENSITY OF CALIBRATED SAND — 98.6 lbm/ft³
(7) VOL. OF HOLE, (5)/(6) — 0.2694 ft³
(8) TOTAL MASS WET MATERIAL & CAN — 39.18 lbm
(9) MASS-CAN, NO. 2 — 2.00 lbm

②

(10) TOTAL MASS WET MATERIAL (8)-(9) — 37.18 lbm
* (11) WET UNIT WEIGHT, TOTAL MATERIAL (10)/(7) — 138.0 lbf/ft³
(14) MASS-WET + NO. 4 — 5.06 lbm
(17) SP. G., + NO. 4 — 2.68
(21) MOISTURE CONTENT, + NO. 4 — 1.0 %
(24) FILL UNIT WEIGHT, WET 134.3 DRY 117.0 lbf/ft³
(25) FILL MOISTURE CONTENT, w_f — 14.8 %
(26) FIRST SPECIMEN UNIT WEIGHT, WET _____ DRY _____ lbf/ft³
(27) MAX. UNIT WT. AT FILL MOISTURE CONTENT WET _____ DRY _____ lbf/ft³
(28) OPT. MOISTURE CONTENT, w_o — _____ %
$w_o = w_f + [z_m \times (1 + w_f/100)]$
(29) $w_o - w_f$ — _____ %
(30) C VALUE (24)/(26) — _____ %
(31) D VALUE (24)/(27) — _____ %

④ COMMENTS - 18 SPACES AVAILABLE

③ RAPID METHOD CONTROL DATA

			FIRST SPECIMEN	SECOND SPECIMEN	
POINT NO.					
ADDED WATER (%)			0.0	+ 2.0	
MASS-MOLD & WET SOIL (lbm)					
MASS-MOLD (lbm) NO. ___					
MASS-WET SOIL (lbm)					
VOL. OF MOLD (ft³)					
*WET UNIT WEIGHT (lbf/ft³)			(26)		
CONVERTED UNIT WEIGHT (lbf/ft³)					

Y_1/Y_2 CHART (ONE PERCENT)

PT. 1		PT. 1	
PT. 3		PT. 2	
Y_1 (1-3)		Y_2 (1-2)	
z_m		y_m	
RLC		PT. 1	
$w_o - w_f = z_m$ + RLC	(29)	MAX. WET UNIT WT.	(27)

Y_2/Y_4 CHART (TWO PERCENT)

PT. B		PT. C	
PT. A		PT. A	
Y_2 (B-A)		Y_4 (C-A)	
x_m		y_m	
$z_m = x_m$ + ADDED WATER @ PT. A			
RLC		PT. A	
$w_o - w_f = z_m$ + RLC	(29)	MAX. WET UNIT WT.	(27)

PLUS NO. 4 (OVERSIZE)

(12) MASS-WET + NO. 4 & PAN — 7.20 lbm
(13) MASS-PAN, NO. 4 — 2.14 lbm
(14) MASS-WET + NO. 4 (12)-(13) — 5.06 lbm
(15) MASS + NO. 4 IN WATER — 3.17 lbm
(16) VOL. OF + NO. 4 [(14)-(15)] /62.4 — 0.0303 ft³
(17) SP. G OF + NO. 4 (14)/[(14)-(15)] — 2.68
(18) MASS- DRY + NO. 4 & PAN — 8.02 lbm
(19) MASS-PAN, NO. 5 — 3.01 lbm
(20) MASS-DRY + NO. 4 (18)-(19) — 5.01 lbm
(21) MOISTURE CONTENT + NO. 4 [(14)-(20)] /(20) x 100 — 1.0 %
(22) VOL. OF -NO. 4 (7)-(16) — 0.2391 ft³
(23) MASS-WET -NO. 4 (10)-(14) — 32.12 lbm
*(24) WET UNIT WT. (23)/(22) — 134.3 lbf/ft³

*ASSUME 1 lbf = 1 lbm

FILL MOISTURE CONTENT

DISH NO.	10
MASS-WET SOIL + DISH	433.0g
MASS-DRY SOIL + DISH	396.0g
MASS-DISH	146.0g
MASS-WATER	37.0g
MASS-DRY SOIL	250.0g
MOISTURE CONTENT (25)	14.8%

AUXILIARY TESTS
USBR 5300 - 89

IN PLACE UNIT WEIGHT PERFORMED IN ACCORDANCE WITH USBR 7220 - 89

+ # 4 SPECIFIC GRAVITY PERFORMED IN ACCORDANCE WITH USBR 5230 - 89

( ) STORED

Figure 5. - Rapid method test record in place unit weight — example.

USBR 7220 - FIELD DETERMINATION

MASS-SAND & CAN(S), NO. 6 50.50 lbm

MASS-SAND RESIDUE & CAN(S) 46.47 lbm

MASS-SAND IN TEMPLATE 4.03 lbm (TRANSFER TO LINE (4) ON FRONT SIDE)

Figure 5. - Rapid method test record in place unit weight — example — continued.

7-1709 (9-86)
Bureau of Reclamation

RELATIVE DENSITY TEST RECORD

Designation USBR 7205-89

PROJECT	FEATURE	FILL
Example		
TESTED BY / DATE	COMPUTED BY / DATE	CHECKED BY / DATE

MONTH	DAY	SHIFT 1/	TEST NO.	TYPE 2/	STATUS 3/	BORROW AREA CODE	STANDARD COMPACTION CODE	SOIL CLASSIFICATION	STATION	OFFSET	ELEV.

MAX. SIZE	OVERSIZE (%)	GRAVEL (%)	SAND (%)	FINES (%)	SpG OVERSIZE	MOISTURE OVERSIZE (%)	MOISTURE CONTROL FRACTION (%)	γ_{WET} TOTAL MATL	γ_{DRY} CONTROL FRACTION	$\gamma_{D_{MIN}}$	$\gamma_{D_{MAX}}$

A

IN-PLACE UNIT WEIGHT

(1)	Mass of sand & can(s) No(s). - - - 1	40.00	lbm
(2)	Mass of sand residue & can(s)	9.41	lbm
(3)	Mass of sand used (1) - (2)	30.59	lbm
*(4)	Mass of sand in template/cone	4.03	lbm
(5)	Mass of sand in hole (3) - (4)	26.56	lbm
(6)	Density of calibrated sand	98.6	lbm/ft^3
(7)	Volume of hole (5)/(6)	0.2694	ft^3
(8)	Total mass of wet material and can(s)	39.18	lbm
(9)	Total mass of can(s) No(s). - - - 2	2.00	lbm
(10)	Mass of wet material (8) - (9)	37.18	lbm
**(11)	Wet unit weight total material (10)/(7)	138.0	lbf/ft^3

OVERSIZE

(12)	Wet mass of oversize (surface dried condition)	5.06	lbm
(13)	Mass of oversize in water	3.17	lbm
(14)	Volume of oversize $\frac{(12)-(13)}{62.4}$	0.0303	ft^3
(15)	SpG of oversize $\frac{(12)}{(12)-(13)}$	2.68	
(16)	Wet mass of control fraction (10) - (12)	32.12	lbm
**(17)	Wet unit weight, control fraction $\frac{(16)}{(7)-(14)}$	134.3	lbf/ft^3
(18)	Dry unit weight, control fraction $\frac{(17)}{1+[(w_f)/100]}$	117.0	lbf/ft^3

B

FILL MOISTURE CONTENT

		OVERSIZE	CONTROL FRACTION
(1)	Mass of pan & wet soil	8.07	433.0
(2)	Mass of pan & dry soil	8.02	396.0
(3)	Mass of pan No(s). 5, 10	3.01	146.0
(4)	Mass of water (1) - (2)	0.05	37.0
(5)	Mass of dry soil (2) - (3)	5.01	250.0
(6)	Moisture content [(4)/(5)] x 100	(w_{os}) 1.0 %	(w_f) 14.8 %

C

GRADATION

Maximum size

(1) Dry mass of oversize $\frac{(12A)}{1+[(w_{os})/100)]}$ lbm

MINUS 3-IN SPLIT SAMPLE

(2)	Mass of dry plus No. 4	lbm
(3)	Mass of dry minus No. 4	lbm
(4)	Mass of total split sample (2) + (3)	lbm
(5)	Mass of dry minus 3-in total sample $\frac{(16A)}{1+[(w_f)/100]}$	lbm
(6)	Total dry mass (1) + (5)	lbm
(7)	Percent oversize [(1)/(6)] x 100	%
(8)	Percent gravel [(2)/(4)] x [100 - (7)]	%
(9)	Percent plus No. 4 (7) + (8)	%
(10)	Percent minus No. 4 100 - (9)	%
(11)	Mass of dry minus No. 4 washed on No. 200	g
(12)	Mass of dry minus No. 4 retained on No. 200	g
(13)	Mass of dry minus NO. 4 passing No. 200 (11) - (12)	g
(14)	Percent fines, total sample [(13)/(11)] x (10)	%
(15)	Percent sand (10) - (14)	%

1/ A = day, B = swing, C = graveyard
2/ R = regular, C = congested, D = doubtful
3/ A = accepted, R = rejected

*Calibration value (USBR 1435) or field determination (USBR 7220)
Mass of template sand & can(s), No(s). - - 6: 50.50 lbm
Mass of template sand residue & can(s): 46.47 lbm
Mass of sand in template* (4): 4.03 lbm
**Implies 1 lbm = 1 lbf

Comments for PAYDIRT program (18 spaces available):

Testing observations:

Stored ( )

Figure 6. – Relative density test record — example.

If the soil contains 3 percent (wet basis) or more oversize, method B must be used.

10.9.13 If less than 3 percent oversize is present, obtain a moisture content specimen representative of the excavated soil and determine the moisture content in accordance with USBR 5300 and record.

10.9.14 Calculate and record the dry unit weight of the soil to the nearest 0.1 lbf/ft³. If required, convert and record the dry unit weight to the nearest 0.02 kN/m³ (SI units).

11. Procedure: Method B — In-Place Unit Weight of Control Fraction

11.1 All data are to be recorded on the "In-Place Unit Weight Test Record" form as shown on figure 4, the "Rapid Method Test Record In-Place Unit Weight" form as shown on figure 5, or the "Relative Density Test Record" form as shown on figure 6.

11.2 Obtain the in-place unit weight of total material by following the procedure for method A, as stated in paragraph 10.

11.3 To obtain the wet unit weight of the control fraction, the mass and volume of the oversize are determined and subtracted from the total mass and total volume to obtain the mass and volume of the control fraction. From the mass and volume of the control fraction, the unit weight can be calculated.

11.3.1 Normally, the wet unit weight of the control fraction is determined and the dry unit weight calculated using the moisture content of the control fraction.

11.3.2 In addition, the moisture content of the oversize, the moisture content of the total material, and the percentage of oversize are determined.

11.4 After obtaining the wet mass of total soil removed from the test hole, separate the soil into the control fraction and the oversize using the designated sieve. This should be done rapidly to minimize loss of moisture. If the test is for construction control, place the control fraction in an airtight container for further tests.

11.5 Wash the oversize using a minimum of water and blot to a surface-dry condition.

11.6 Determine the wet mass of oversize plus container of predetermined mass, and record to the nearest 0.01 lbm.

11.7 Calculate the wet mass of the oversize and record to the nearest 0.01 lbm.

11.8 Calculate the wet mass of the control fraction and record to the nearest 0.01 lbm.

11.9 Determine the volume of oversize material to the nearest 0.0001 ft³ by one of the following methods:

11.9.1 Calculate the volume based on wet mass of all oversize in air and in water according to procedures in USBR 5320 with the exception that the 24-hour soaking period may be waived.

11.9.1.1 Calculate the bulk specific gravity of the oversize and record to the nearest 0.01.

11.9.2 Determine the bulk specific gravity in accordance with USBR 5320 (with the exception that the 24-hour soaking period may be waived) and calculate the volume using the bulk specific gravity of the oversize. If previous tests for bulk specific gravity have been performed and the value is relatively constant, a bulk specific gravity may be assumed. Record the bulk specific gravity to the nearest 0.01.

11.10 Calculate the volume of the control fraction and record to the nearest 0.0001 ft³.

11.11 Calculate the wet density of the control fraction and record to the nearest 0.1 lbm/ft³.

11.12 Convert wet density to wet unit weight by changing lbm/ft³ to lbf/ft³ (assume 1 lbf = 1 lbm) and record to the nearest 0.1 lbf/ft³.

11.13 Determine and record the moisture content of the control fraction in accordance with USBR 5300.

11.14 Calculate and record to the nearest 0.1 lbf/ft³ the dry unit weight of the control fraction. If required, convert and record the dry unit weight to SI units (within 0.02 kN/m³).

11.15 Determine and record the moisture content of all oversize in accordance with USBR 5300. If previous tests for moisture content of the oversize from a particle source have been performed and the value is relatively constant, a moisture content may be assumed.

11.16 Determine the percentage of oversize.

11.16.1 Calculate the dry mass of the control fraction and record to the nearest 0.01 lbm.

11.16.2 Calculate the dry mass of the oversize and record to the nearest 0.01 lbm.

11.16.3 Calculate the dry mass of the total sample and record to the nearest 0.01 lbm.

11.16.4 Calculate the percentage of oversize and record to the nearest 0.1 percent.

11.17 Calculate the moisture content of the total material and record to the nearest 0.1 percent.

11.18 Calculate and record to the nearest 0.1 lbf/ft³ the dry unit weight of the total material. If required, convert and record the dry unit weight to SI units (within 0.02 kN/m³).

12. Calculations — Method A

12.1 The following symbols are used in calculations for method A of this procedure where:

m_1 = mass of sand and container(s) (before test), lbm
m_2 = mass of sand residue and container(s) (after test), lbm
m_3 = mass of sand used, lbm
m_4 = mass of sand in template and cone (determined from USBR 1435), lbm
m_5 = mass of sand in test hole, lbm
m_8 = mass of wet material removed from test hole plus mass of container(s), lbm
m_9 = mass of container(s) for m_8, lbm
m_{10} = mass of wet material removed from test hole, lbm
V_T = volume of test hole, ft³
ρ_s = density of calibrated sand, lbm/ft³

ρ_{wet} = wet density of soil from test hole, lbm/ft³
γ_{wet} = wet unit weight of soil from test hole, lbf/ft³
γ_d = dry unit weight of soil from test hole, lbf/ft³ (kN/m³)
w = moisture content of soil from test hole, %

12.2 Calculate the mass of sand used to fill the test hole, the template, and the cone.

$$m_3 = m_1 - m_2 \quad (1)$$

12.3 Calculate the mass of sand used to fill the test hole.

$$m_5 = m_3 - m_4 \quad (2)$$

12.4 Calculate the volume of the test hole.

$$V_T = \frac{m_5}{\rho_s} \quad (3)$$

12.5 Calculate the mass of wet material removed from test hole.

$$m_{10} = m_8 - m_9 \quad (4)$$

12.6 Calculate the wet density of the material removed from the test hole.

$$\rho_{wet} = \frac{m_{10}}{V_T} \quad (5)$$

12.6.1 In the procedure, wet density is converted to wet unit weight by changing lbm/ft³ to lbf/ft³. (Assume 1 lbm = 1 lbf.)

12.7 Calculate the dry unit weight of the material removed from the test hole.

$$\gamma_d = \frac{\gamma_{wet}}{1 + \left(\frac{w}{100}\right)} \quad (6)$$

12.7.1 Convert dry unit weight in inch-pound units to SI units if required.

$$\text{Unit weight, kN/m}^3 = \frac{0.1571 \text{ kN/m}^3}{\text{lbf/ft}^3} \times (\text{unit weight, lbf/ft}^3) \quad (7)$$

13. Calculations — Method B

13.1 In addition to the symbols used in method A (par. 12), the following symbols are used in calculations for method B of this procedure where:

m_{13} = wet mass of oversize and container, lbm
m_{14} = mass of container, lbm
m_{15} = wet mass of oversize, lbm
m_{16} = mass of oversize suspended in water, lbm
m_{19} = dry mass of oversize and container, lbm
m_{20} = mass of container, lbm
m_{21} = dry mass of oversize, lbm
m_{23} = wet mass of control fraction, lbm
m_{25} = dry mass of control fraction, lbm
m_{26} = dry mass of total sample (control fraction plus oversize), lbm
V_{os} = volume of oversize, ft³
V_c = volume of control fraction, ft³
$\rho_{wet}(c)$ = wet density of control fraction, lbm/ft³
$\gamma_{wet}(c)$ = wet unit weight of control fraction, lbf/ft³
$\gamma_d(c)$ = dry unit weight of control fraction, lbf/ft³ (kN/m³)
$\gamma_d(T)$ = dry unit weight of total material, lbf/ft³ (kN/m³)
G_m = bulk specific gravity of oversize
w = moisture content of excavated soil, %
w_f = moisture content of control fraction, %
w_{os} = moisture content of oversize, %

13.2 Calculate the wet mass of the oversize.

$$m_{15} = m_{13} - m_{14} \quad (8)$$

13.3 Calculate the wet mass of the control fraction.

$$m_{23} = m_{10} - m_{15} \quad (9)$$

13.4 Calculate the volume of the oversize based on the mass in air and mass in water method.

$$V_{os} = \frac{m_{15} - m_{16}}{62.4} \quad (10)$$

where 62.4 equals density of water, lbm/ft³.

13.5 Calculate the bulk specific gravity of the oversize.

$$G_m = \frac{m_{15}}{m_{15} - m_{16}} \quad (11)$$

13.6 Calculate the volume of the oversize based on a known bulk specific gravity.

$$V_{os} = \frac{m_{15}}{62.4\ G_m} \quad (12)$$

13.7 Calculate the volume of the control fraction.

$$V_c = V_T - V_{os} \quad (13)$$

13.8 Calculate the wet density of the control fraction.

$$\rho_{wet}(c) = \frac{m_{23}}{V_c} \quad (14)$$

13.8.1 In the procedure, wet density is converted to wet unit weight by changing lbm/ft³ to lbf/ft³. (Assume 1 lbm = 1 lbf).

13.9 Calculate the dry unit weight of the control fraction.

$$\gamma_d(c) = \frac{\gamma_{wet}(c)}{1 + \left(\frac{w_f}{100}\right)} \quad (15)$$

13.9.1 Convert dry unit weight in inch-pound units to SI units, if required.

$$\text{Unit weight, kN/m}^3 = \frac{0.1571 \text{ kN/m}^3}{\text{lbf/ft}^3} \times (\text{unit weight, lbf/ft}^3) \quad (16)$$

13.10 Calculate the dry mass of the control fraction.

$$m_{25} = \frac{m_{23}}{1 + \left(\frac{w_f}{100}\right)} \quad (17)$$

13.11 Calculate the dry mass of the oversize using one of the following equations as appropriate:

$$m_{21} = m_{19} - m_{20} \quad (18)$$

$$m_{21} = \frac{m_{15}}{1 + \left(\frac{w_{os}}{100}\right)} \quad (19)$$

13.12 Calculate the dry mass of the total sample.

$$m_{26} = m_{25} + m_{21} \quad (20)$$

13.13 Calculate the percentage of oversize.

$$\text{Percentage of oversize} = 100 \left(\frac{m_{21}}{m_{26}}\right) \quad (21)$$

13.14 Calculate the moisture content of the total material.

$$w = 100 \left(\frac{m_{10} - m_{26}}{m_{26}}\right) \quad (22)$$

13.15 Calculate the dry unit weight of total material.

$$\gamma_d(\mathrm{T}) = \frac{\gamma_{wet}}{1 + \left(\frac{w}{100}\right)} \quad (23)$$

13.15.1 Convert dry unit weight in inch-pound units to SI units, if required.

$$\text{Unit weight, kN/m}^3 = \frac{0.1571 \text{ kN/m}^3}{\text{lbf/ft}^3} \times (\text{unit weight, lbf/ft}^3) \quad (24)$$

14. Report

14.1 Report the results on the applicable form (figs. 4, 5, or 6) for investigation and/or construction control testing.

14.2 All calculations are to show a checkmark.

APPENDIX

X1. GUIDELINES FOR SAND-CONE POURING DEVICE SIZE AND HOLE DIMENSIONS

X1.1 Guidelines for establishing test hole diameters, depths, and volumes according to maximum particle size are difficult because the possible combinations of soil maximum particle sizes and gradations that may be encountered are limitless. General guidelines (table X1.1) have been prepared; judgment is required in their application.

X1.2 The two main factors involved in determination of the size of the test hole are (1) the sample should be representative of the fill, and (2) whenever possible, control tests should be performed on soil actually removed from the test hole. Recommendations for minimum sample sizes for various tests are discussed in USBR 5205.

X1.3 Conditions may exist which make it difficult or impossible to obtain all the soil necessary for laboratory testing from the test hole. Foundation tests, 4- and 6-inch-thick road bases, and other one-lift areas (such as soil-cement) prohibit obtaining large samples, and additional soil must be taken from near the test hole. When this occurs, it is imperative to note any observable differences between the soil excavated from the test hole and the adjacent soil, such as changes in moisture content or gradation. Note that the 6-inch-diameter cone is not included in the table. The 8-inch cone is preferred as the larger hole provides a bigger sample, requires only a minimal amount of extra excavation, and eliminates the need for an additional set of laboratory equipment.

X1.4 Table X1.1 provides recommended guidelines for cone diameter and minimum test hole volumes. The typical 8-inch cone is shown as having a test hole depth of 12 inches in order to test two 6-inch compacted lifts of soil (volume = 0.35 ft^3). In cases where no visible difference is present in the lifts, the hole may be terminated at a shorter depth resulting in a minimum volume of 0.25 ft^3. The minimum volume is based on the minimum amount of minus No. 4 material required for rapid compaction testing. If plus No. 4 material is present, additional soil must be obtained.

Table X1.1. – Recommended guidelines for selection of cone diameter and minimum test hole volume.

Cone diameter in	Minimum test hole volume ft^3	Test hole depth in	Significant particle size in
8	0.25*	12	3/4
12	0.50	14	1-1/2

* Minimum volume for embankment dams.

X1.5 Particle sizes, in excess of the size given in table X1.1, may begin to interfere with the ability to obtain in-place unit weight with accepted precision of the test. In general, if more than 20 percent of the sizes present exceed the significant particle size, consideration should be given to increasing the hole size. This guideline is based on (1) amount of minus No. 4 material required for rapid compaction, (2) amount of soil required to provide a representative specimen, and (3) particle size interference with excavation of the test hole.

X1.6 The rapid method of construction control (USBR 7240) testing requires approximately 22.5 lbm of minus No. 4 material. If the soil being tested is very dry or very wet and a fourth point may be necessary, 30 lbm of minus No. 4 material is required. When soils containing plus No. 4 material are encountered, the operator performing the test must visually determine the amount of soil necessary to provide a sufficient quantity of minus No. 4 material for control testing.

X1.7 Sample requirements for minimum (USBR 5525) and maximum (USBR 5530) index unit weight testing for various maximum particle size materials are discussed in USBR 5205. Since gradation testing usually accompanies relative density testing, additional soil may be required. When 3/4 inch or larger material and percent relative density are specified, a test pit method (USBR 7220 or 7221) should be used to obtain sufficient soil to perform control testing. When dry sands or predominantly coarse, nonplastic soils are encountered, test pit methods are more applicable. The hand-excavated test pit enables excavation of a conical or rounded hole, thus minimizing problems associated with sidewall stability. When coarse-grained soils with voids that may be penetrated by the calibrated sand are encountered, a test pit method should be used. Those procedures allow use of a thin plastic liner in the test hole to prevent sand or water used in the volume determination from entering the natural voids.

UNITED STATES DEPARTMENT OF THE INTERIOR
BUREAU OF RECLAMATION

USBR 7206-89

PROCEDURE FOR

DETERMINING UNIT WEIGHT OF SOILS IN-PLACE BY THE RUBBER BALLOON METHOD

INTRODUCTION

This procedure is under the jurisdiction of the Geotechnical Services Branch, code D-3760, Research and Laboratory Services Division, Denver Office, Denver, Colorado. The procedure is issued under the fixed designation USBR 7206. The number immediately following the designation indicates the year of acceptance or the year of last revision.

This method is similar to ASTM D 2167, Standard Test Method for Density and Unit Weight of Soil In-Place by the Rubber Balloon Method.

1. Scope

1.1 This designation outlines the procedure for determining the wet and dry unit weight of soils in-place, expressed in units of pound force per cubic foot or kilonewton per cubic meter, using a rubber balloon apparatus to determine the volume of the test hole.

1.2 Using a small rubber balloon apparatus, this procedure is suitable for soils having a maximum particle size between U.S.A. Standard series No. 4 (4.75-mm) sieve and 3/4 inch (19.0 mm), with test hole volumes of 0.05 to 0.15 ft^3. Soils containing larger particle sizes will require the use of a large rubber balloon apparatus (see table 1).

1.3 This procedure can be used to determine the in-place wet and dry unit weight of nonsaturated natural or in-place soils, compacted fills or embankments constructed of fine-grained soils, or granular soils without appreciable coarse, angular gravel.

1.4 This procedure is not suitable for: (1) cohesionless soils which ravel, or (2) very soft compressible soils which deform under slight pressure, with the result that the volume of the test hole cannot be maintained at a constant value. Also, the procedure is not suitable for use on slopes unless the slope is excavated to allow the apparatus to be used in a vertical position.

2. Auxiliary Tests

2.1 A moisture content sample must be obtained according to table 1 and the moisture content determined in accordance with USBR 5300 as part of this procedure.

3. Applicable Documents

3.1 *USBR Procedures*:
USBR 1009 Calibrating Compaction Molds
USBR 1012 Calibrating Balances or Scales
USBR 1020 Calibrating Ovens
USBR 1025 Checking Sieves
USBR 3900 Standard Definitions of Terms and Symbols Relating to Soil Mechanics
USBR 5300 Determining Moisture Content of Soil and Rock by the Oven Method
USBR 5305 Determining Moisture Content of Soils Using the Moisture Teller Device
USBR 5310 Determining Moisture Content of Soils Using the Calcium Carbide Reaction Device
USBR 5315 Determining Moisture Content of Soils by the Microwave Oven Method
USBR 5500 Performing Laboratory Compaction of Soils — 5.5-lbm Rammer and 18-in Drop
USBR 7205 Determining Unit Weight of Soils In-Place by the Sand-Cone Method

4. Summary of Method

4.1 This method is used to determine in-place wet and dry unit weight of soils by removing soil from a test hole, determining the mass of the excavated material, and measuring the volume of the hole with a liquid-filled balloon under constant pressure. The rubber balloon apparatus consists of a calibrated vessel connected to an elastic membrane (rubber balloon) which is inflated with water under pressure in the test hole. The pressure stretches the rubber balloon around irregularities in the test hole, thereby providing an accurate volume determination. Depending upon the operating pressure selected, surcharge masses may be necessary to prevent the apparatus from lifting during performance of the test.

5. Significance and Use

5.1 This method can be used to determine the in-place wet and dry unit weight of natural, inorganic soil deposits, soil-aggregate mixtures, or other similar firm materials.

5.2 This method also can be used to determine the wet and dry unit weight of compacted soils in compacted fills or embankments, road fills, and structural backfill. It is often used as the basis of acceptance for soils compacted to a specified unit weight or a percentage of maximum unit weight determined by a standard laboratory test method.

5.3 Generally, this method is limited to soils in an unsaturated condition, and is not recommended for cohesionless soils or very soft compressible soils which undergo volume change during application of pressure during testing.

5.4 This method may not be suitable for soils containing crushed rock fragments or sharp angular particles due to possible puncturing of the rubber membrane.

6. Terminology

6.1 Definitions are in accordance with USBR 3900. Terms of particular significance are:

6.1.1 *Dry Unit Weight* (γ_d).–The weight of solid particles per unit of total volume.

6.1.2 *Wet Unit Weight* (γ_{wet}).–The unit weight of solids plus water per unit volume, irrespective of the degree of saturation.

6.1.3 *Moisture Content* (w).–The ratio expressed as a percentage of: (1) the mass of water in a given soil mass, to (2) the mass of solid particles (ASTM definition).

7. Apparatus

7.1 *General Apparatus*:

7.1.1 *Drying Oven.*–An oven, thermostatically controlled, preferably of the forced-draft type, and capable of maintaining a uniform temperature of 230±9 °F (110±5 °C) throughout the drying chamber. Other acceptable drying methods and equipment may be used for rapid determination of the moisture content, if specified.

NOTE 1.–Acceptable rapid drying methods (for fine-grained soils) include the Moisture Teller Method (USBR 5305), Carbide Reaction Method (USBR 5310), and the Microwave Oven Method (USBR 5315). These methods should be used only as a quick estimate of the moisture content, and if they are used, the oven method moisture content (USBR 5300) also should be obtained.

7.1.2 *Balance or Scale.*–Typical balances or scales used for this designation are:

Application	*Readable to*	*Approximate capacity*
Moisture content	0.1 g	1000 g
Unit weight determination	0.01 lbm	100 lbm

7.2 *Rubber Balloon Apparatus*:

7.2.1 The rubber balloon apparatus consists of a calibrated water-filled vessel which is connected to a thin, flexible membrane (rubber balloon) for measuring the volume of a test hole under the specified conditions of this procedure (see fig. 1). The vessel is usually calibrated by the manufacturer to measure the discharge (volume) of water in ft^3.

NOTE 2.–While water generally is used as the fluid in this procedure, other fluids, such as antifreeze mixtures, can be substituted in below freezing temperatures provided appropriate calibration procedures are followed and the apparatus is flushed with clean water following its use. Use only the purest, cleanest water available and store the vessel empty and dry when used infrequently.

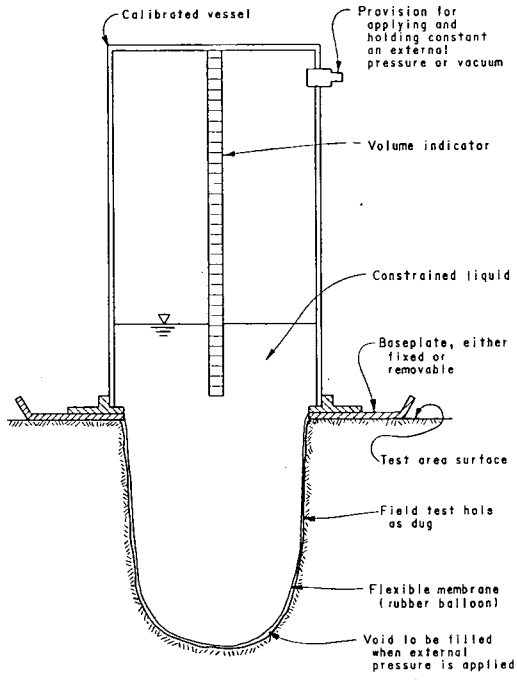

Figure 1. – Rubber balloon apparatus (drawing not to scale).

7.2.2 The apparatus shall be equipped with a combination air pressure-vacuum pump so that an externally controlled pressure or partial vacuum can be applied to the fluid in the vessel. The apparatus also shall incorporate an integral pressure gauge or other means for controlling and holding the applied pressure constant during calibration and testing.

7.2.3 The apparatus shall be of such size and mass that it will not cause any deformation of the excavated test hole and adjacent test area during performance of the test. Provisions shall be made for placing additional loads (surcharge masses) on the apparatus up to a maximum pressure of 5 lbf/in^2 (35 kPa).

The effect of the surcharge is to allow greater pressure to be applied to the water in the vessel to increase the accuracy of the volume determination. The applied pressure, however, should not be so high as to lift the apparatus or cause deformation of the test hole or adjacent ground surface.

7.2.4 The vessel is either calibrated directly or an indicator is provided to measure the volume of fluid discharged from the vessel in ft^3 (or m^3) which is considered to be equal to the volume of the test hole.

7.2.5 The rubber balloon is to be of such size and shape as to fill the test hole completely without wrinkles or folds when expanded into the test hole. The balloon should not be so stiff that it cannot conform to the sides of the test hole, but should have sufficient strength to withstand such pressures as necessary to ensure complete filling of the test hole without loss of fluid. The length of the balloon should be adjusted during assembly of the apparatus to conform to the anticipated size of the test hole with minimum stretching. This will minimize the

bridging effect of a prestressed membrane, reserve most of the potential stretch for conforming to irregularities created during digging of the test hole, and reduce the potential for rupture of the membrane due to protruding sharp, angular particles. Provision should be made for withdrawal of the water-filled balloon from the test hole by the application of a partial vacuum to the fluid in the vessel, or by other means.

NOTE 3.–The applied vacuum should be limited to 1 inch of water to prevent damage to the rubber balloon during its retrieval from the test hole.

7.2.6 *Baseplate.*–A rigid metal plate fabricated to fit the base of the balloon apparatus. The baseplate should have a minimum outside dimension of twice the test hole diameter to prevent deformation of the test hole while supporting the apparatus and any surcharge masses used.

7.2.7 The description and requirements of this procedure are intended to be nonrestrictive. Any apparatus using a flexible membrane (or rubber balloon) and fluid that can be used to measure the volume of a test hole under the specified conditions of this procedure to an accuracy within 0.1 percent is satisfactory.

7.3 *Miscellaneous Equipment.*–Shovels and straightedges for leveling and preparing the test location; soil auger, butcher knives, small hand pick, large (1-inch) chisels, rubber mallet, and sampling spoons for digging the test hole; small hand scoops to retrieve material from the test hole; brushes for sweeping loosened material from the sides of test hole for retrieval; field cans (moisture proof containers with tight fitting lids); surcharge masses if required for the apparatus; calibration forms and data sheets; calculator for calculations.

7.4 *Calibration Equipment.*–Thermometer accurate to 0.5 °F (0.1 °C); glass plate 1/4 inch or thicker to cover top of calibration molds(s) or container(s); heavy cup grease.

8. Reagents and Materials

8.1 Tapwater that is free of acids, alkalies, or oils, and is suitable for drinking should be used to fill the rubber ballon (see note 2).

8.2 Glycol-type antifreeze solutions may be substituted in freezing temperatures.

9. Precautions

9.1 *Safety Precautions*:

9.1.1 This designation may involve hazardous materials, operations, and equipment.

9.1.2 Normal precautions taken for fieldwork.

9.2 *Technical Precautions.*–A working platform supported at least 3 feet away from the edge of the test hole should be provided when digging test holes in soft or compressible soils that deform due to the operator's weight near the edge of the hole.

10. Calibration and Standardization

10.1 The calibration of the rubber balloon apparatus is checked using a calibration mold or container of known volume that is dimensionally similar to the test holes that will be dug in the field. The apparatus and procedures are such that the calibration containers will be measured to within 1 percent of the actual volumes. Containers of different volumes should be used so that the calibration of the volume containers covers the range of anticipated test hole sizes.

NOTE 4.–Compaction molds having a diameter of 4.0 inches and volume of 1/30 ft^3, and a diameter of 6 inches and volume of 1/13 ft^3, are suitable calibration containers.

10.2 *Volume of Containers*:

10.2.1 Determine the mass of water (in grams) required to fill one of the calibration containers by the water filling method described in USBR 1009.

Repeat this procedure until three values are obtained for the volume of the calibration container having a maximum range of variation of 0.0001 ft^3.

10.2.2 Repeat subparagraph 10.2.1 for each of the molds and calibration containers to be used in the calibration check.

10.3 *Calibration Check Tests.*–Place the rubber balloon apparatus and baseplate on a smooth horizontal surface. Apply an operating pressure between 2 to 5 lbf/in^2 (14 to 35 kPa), adding sufficient surcharge mass to the top of the calibration vessel as required to prevent the apparatus from lifting, and obtain an initial reading on the volume indicator. After releasing the pressure, apply a vacuum to the vessel retracting the balloon into the vessel.

Transfer the apparatus to a previously calibrated mold or calibration container placed on a level surface. Distend the balloon and remove any wrinkles present. Since the balloon will create an airtight seal with the calibration container, vents should be provided which may consist of a number of small diameter strings draped over the edge of the calibration mold prior to placing the apparatus over the mold.

NOTE 5.–Prefabricated test holes of various sizes and surface irregularities may be used to simulate actual test holes for comparison with calibration molds or containers.

Using the same operating pressure and surcharge mass used to obtain the initial reading, allow the balloon to fill with water and extend into the calibration container until there is no change on the volume indicator.

NOTE 6.–It is recommended that operating pressure be kept as low as possible while maintaining the 1-percent volume accuracy. The use of higher pressures than necessary may require the use of additional load or surcharge mass to prevent uplift of the apparatus. The combined pressure and surcharge loads may result in stressing the unsupported soil surrounding the test hole causing it to deform.

Record the volume readings, operating pressure, and surcharge mass used. The difference between the initial and final volume readings is the volume of the calibration container. Depending on the type of apparatus, the readings should be made to the nearest 0.001 ft^3. A satisfactory calibration check of an apparatus has been achieved when

the difference between the calibrated volume of the calibration container and the volume measured by the rubber balloon apparatus is 1.0 percent, or less, for all volumes measured.

10.4 Calibration check tests should be performed periodically, such as annually, or whenever the apparatus has been damaged, undergone repairs, or the balloon has been replaced.

11. Conditioning

11.1 Not applicable, special conditioning requirements are not needed for this procedure.

12. Procedure

12.1 All test data are recorded on the "In-Place Unit Weight of Soil — Rubber Balloon Method" (fig. 2). Prepare the ground surface at the test location so that it is reasonably smooth and level. Depending on the soil moisture content and structure (degree of compaction and gravel content), the surface may be leveled using a blade of a bulldozer or other heavy equipment provided the test area is not deformed or disturbed.

12.2 Assemble the baseplate and rubber balloon apparatus on the test location using the same operating pressure and surcharge mass used during the equipment calibration. Obtain an initial reading on the volume indicator and record it on the test data form (see fig. 2). The initial reading takes into account slight irregularities in the ground surface. The baseplate is to remain in place during digging of the test hole and throughout the test.

12.3 Remove the rubber balloon apparatus from the test hole site, leaving the baseplate in place. Using knives, chisels, spoons, hand scoops, etc., as necessary, dig a test hole within the confines of the hole in the baseplate. Care should be exercised to avoid disturbing the soil around the edge of the hole.

NOTE 7.–A working platform should be used around the test hole while digging in soft, compressible soil to prevent deformation of the ground surface which will cause squeezing of the test hole.

The volume of the test hole should conform to the minimum volume requirements shown in table 1, based on the maximum particle size being tested. Larger test hole volumes will provide increased accuracy and should be used where practicable. In general, the dimensions of the test hole should approximate the dimensions of the calibration containers used in the calibration check procedure. The test hole should be kept as free as possible of irregularities or sharp protrusions, since they may affect test accuracy or result in puncturing the rubber balloon, causing leakage. Place all soil removed from the test hole in a moistureproof container for subsequent soil mass and moisture content determinations.

12.4 After the test hole has been dug, place the rubber balloon apparatus over the baseplate, oriented in the same way as for the initial volume reading. Apply the same operating pressure and any surcharge mass used in the calibration check and initial volume reading. Obtain and record the reading on the volume indicator after the balloon has expanded to fill the test hole. The difference between the initial and final volume readings is the volume of the test hole.

Table 1. – Minimum test hole volumes and minimum moisture content sample mass based on maximum particle size.

Maximum particle size		Maximum test hole volume		Minimum moisture content
in	mm	ft^3	m^3	sample, g
No. 4 sieve	4.75	0.05	0.0014	200
3/8	9.5	.10	.0028	1000
3/4	19.0	.15	.0042	2000
*1-1/2	37.5	.25	.0071	3000
*3	75.0	.50	.0142	3000 + (representative sample)

* Limited to large rubber balloon apparatus.

NOTE 8.–Attention is called to instances in weak soils where pressure applied to the liquid in the vessel can deform the test hole to an extent as to give an erroneous volume. In such instances, the apparatus must be modified and recalibrated using less surcharge mass and pressure on the liquid in the vessel, or it may be necessary to resort to another method such as USBR 7205.

12.5 Determine the mass of the soil removed from the test hole to the nearest 0.01 lbm. Mix the soil thoroughly and obtain a moisture content sample in accordance with table 1. Determine the moisture content in accordance with USBR 5300.

12.6 Calculate and record the in-place wet and dry unit weights.

13. Calculations

13.1 Calculate the in-place moisture content.

$$w = 100 \left(\frac{A - B}{B - C} \right) \quad (1)$$

where:

w = moisture content of sample, %
A = mass of dish and wet soil, g
B = mass of dish and dry soil, g
C = mass of dish, g
100 = convert from decimal to percent

13.2 The in-place wet unit weight of the soil is determined by dividing the wet mass of soil by the volume of the test hole and is reported in pound force per cubic foot or kilonewton per cubic meter.

13.2.1 Calculate the in-place wet unit weight of the soil removed from the test hole, in pound force per cubic foot.

$$\gamma_{wet} = \frac{m_w}{V} \left(\frac{1 \text{ lbf}}{1 \text{ lbm}} \right) \quad (2)$$

where:

γ_{wet} = in-place wet unit weight, lbf/ft³
m_w = mass of moist soil removed from test hole, lbm
V = volume of test hole, ft³
$\frac{1 \text{ lbf}}{1 \text{ lbm}}$ = change pound mass to pound force

13.2.2 Calculate the in-place wet unit weight of the soil removed from the test hole, in kilonewtons per cubic meter.

$$\gamma_{wet} = 9.8067 \times 10^{-3} \left(\frac{m_w}{V} \right) \quad (3)$$

where:

γ_{wet} = in-place wet unit weight, kN/m³
m_w = mass of moist soil removed from the test hole, kg
V = volume of test hole, m³
9.8067×10^{-3} = change kg/m³ to kN/m³ (see note 9)

NOTE 9.–Density of soil in kg/m³ is multiplied by acceleration of gravity, g (g = 9.8067 m/s²), to convert to unit weight in N/m³. Resulting value is divided by 1000 to convert to kN/m³.

13.3 Calculate the in-place dry unit weight of the soil removed from the test hole, in pound force per cubic foot or kilonewton per cubic meter.

$$\gamma_d = \frac{\gamma_{wet}}{1 + \left(\frac{w}{100} \right)} \quad (4)$$

where:

γ_d = in-place dry unit weight, lbf/ft³ or kN/m³
w = in-place moisture content, %

NOTE 10.–It may be desirable to express the in-place dry unit weight as a percentage of some reference dry unit weight such as the laboratory maximum dry unit weight, as determined in accordance with USBR 5500. This relationship can be determined by dividing the in-place dry unit weight by the reference dry unit weight and multiplying by 100.

14. Report

14.1 The report is to consist of a completed and checked "In-Place Unit Weight Of Soil — Rubber Balloon Method" form (fig. 2).

14.2 All calculations are to show a checkmark.

7-2407 (12-86) Bureau of Reclamation	IN-PLACE UNIT WEIGHT OF SOIL RUBBER BALLON METHOD		Designation USBR 7206 - 89
Project: Example	Feature: Example		Apparatus No.: 1
Surcharge Mass: 100 lbm	Operating Pressure: 2.0 lbf/in^2		Date Calibrated: 3/6/86
Tested By	Date	Checked By	Date

Test Hole No.		1			
Station		5+00			
Reference to Centerline		10' Rt			
Reference to Grade					
UNIT WEIGHT DETERMINATION					
Final Volume Reading - R_2	(ft^3)	0.302			
Initial Volume Reading - R_1	(ft^3)	0.154			
Volume of Test Hole = $R_2 - R_1$	(ft^3)	0.148			
Container No.		7			
Mass of Moist Soil from Hole Plus Container	(lbm)	20.54			
Mass of Container	(lbm)	1.82			
Mass of Moist Soil From Hole	(lbm)	18.72			
Wet Unit Weight	(lbf/ft^3)	126.5			
Dry Unit Weight	(lbf/ft^3)	112.9			
MOISTURE CONTENT DETERMINATION					
Dish No.		285			
Mass of dish + wet soil	(g)	565.1			
Mass of dish + dry soil	(g)	520.2			
Mass of dish	(g)	145.3			
Mass of water	(g)	44.9			
Mass of dry soil	(g)	374.9			
Moisture content (% of dry weight)		12.0			
SOIL CLASSIFICATION					
Classification Symbol		CL			
% Gravel		5			
% Sand		20			
% Fines		75			

Figure 2. - In-place unit weight of soil — rubber balloon method — example.

UNITED STATES DEPARTMENT OF THE INTERIOR
BUREAU OF RECLAMATION

USBR 7215-89

PROCEDURE FOR

DETERMINING THE UNIT WEIGHT OF SOILS IN-PLACE BY THE SLEEVE METHOD

INTRODUCTION

This procedure is under the jurisdiction of the Geotechnical Services Branch, code D-3760, Research and Laboratory Services Division, Denver Office, Denver, Colorado. The procedure is issued under the fixed designation USBR 7215. The number immediately following the designation indicates the year of acceptance or the year of last revision.

1. Scope

1.1 This designation outlines the procedure for determining the unit weight of soil in place by the sleeve method. Two procedures are provided as follows:

1.1.1 Method A, uses routine moisture content testing procedures noted in paragraph 11.

1.1.2 Method B, outlined in paragraph 12, is used when routine moisture content testing procedures are not applicable. This method shall be used when the test hole contains free water or free water enters the test hole during the test.

1.2 The method used will be determined at the test site. When conditions allow, method A should be used.

1.3 The sleeve method of determining the unit weight of soil in place is used for cohesionless, granular soils for which other methods of determining the unit weight (sand cone, test pit, etc.) may not be practical. Typically, the sleeve method is applicable for soils that are predominantly fine gravel size with a maximum of 5 percent fines and a maximum particle size of 19 mm.

1.4 A calibration equation is necessary in the application of this procedure to obtain a reliable value of the in-place unit weight of the soil (see USBR 7216). The calibration equation is predetermined for the particular soil being tested and is used to calculate the unit weight of the soil in place from the mass of dry soil per inch of test hole measured by the sleeve method.

1.5 There may be certain soils meeting the general description in subparagraph 1.3 for which a calibration equation is not appropriate due to unsatisfactory correlation of the data. The sleeve method would not be applicable for these soils.

1.6 There are certain soils having characteristics described in subparagraph 1.3 for which the calibration equation is applicable for only a certain range of unit weight. The sleeve method will give reliable values of the unit weight in place only within that range of unit weights.

1.7 The calibration equation is predetermined for a particular soil type that is to be tested. A new calibration equation must be determined whenever there is a significant change in the gradation or particle angularity of the soil.

2. Auxiliary Tests

2.1 A calibration equation must be predetermined in accordance with USBR 7216 for the soil being tested. The moisture content must be determined in accordance with USBR 5300 as part of performing this procedure.

3. Applicable Documents

3.1 *USBR Procedures*:

USBR 3900 Standard Definitions of Terms and Symbols Relating to Soil Mechanics
USBR 5300 Determining Moisture Content of Soil and Rock by the Oven Method
USBR 7216 Determining the Calibration Equation for the Unit Weight of Soils In-Place by the Sleeve Method

4. Summary of Method

4.1 In this procedure, the unit weight is determined by working a metal sleeve into the soil to be tested, removing the soil within the sleeve, and calculating the dry mass of soil removed per linear inch of the depth of the excavation within the sleeve. The mass per inch is related to the dry unit weight of the soil in place using a calibration equation that has been predetermined for the particular soil being tested.

5. Significance and Use

5.1 This method is used to determine the unit weight of cohesionless soil used in the construction of earth embankments and roadfills, or used for structure backfill, bedding, backfill for pipe, or filters. It is used as the basis for acceptance of soils compacted to a specified relative density.

5.2 This method may be useful in determining the unit weight of cohesionless soils in confined or limited space since it requires less working area than other methods.

5.3 It is assumed there is a linear relationship between the unit weight in place and the mass of dry soil per inch of hole depth measured by the sleeve method. For certain

soils, this may not be true, or the linear relationship may exist for only a particular range of unit weights.

6. Terminology

6.1 Definitions are in accordance with USBR 3900.

6.2 A term not included in USBR 3900 specific to this designation is:

6.2.1 *Calibration Equation.*–The calibration equation defines the relationship between the unit weight of a soil in place and the mass of dry soil per inch of hole depth measured by the sleeve method. A linear relationship is assumed to exist between the two values.

7. Apparatus

7.1 *General Apparatus*:

7.1.1 *Balance or Scale.*–A typical balance or scale used for this designation must be readable to 0.01 lbm and have a capacity of about 50 lbm.

7.1.2 *Drying Oven.*–An oven, thermostatically controlled, preferably of the forced-draft type, and capable of maintaining a uniform temperature of 230±9 °F (110±5 °C) throughout the drying chamber.

7.2 *Equipment Unique to This Procedure* (see fig. 1):

7.2.1 *Sleeve Apparatus.*–Sleeve baseplate, sleeve, measurement plate, and driver.

7.3 *Miscellaneous Equipment.*–Shovel for preparing test surface, nails and hammer for securing sleeve baseplate; scoops and spoons for digging test hole, buckets with lids or other suitable containers for retaining the sample without moisture loss; and a trisquare or machinist's square for measuring the depth of the test hole.

8. Precautions

8.1 *Safety Precautions.*–This designation may involve hazardous materials, operations, and equipment.

8.2 *Technical Precautions*:

8.2.1 Consistency in the gradation and particle angularity of the soil being tested is critical to the test. A new calibration equation is required if significant changes in soil gradation and/or particle angularity occur. The operator performing the test must be aware of the characteristics of the soil used to determine the calibration equation and evaluate whether the soil being tested is significantly different.

8.2.2 *Test Is Operator Sensitive.*–Strict adherence to the procedures set forth in paragraphs 11 and 12 of this procedure is crucial to achieve accurate test results. In particular, the following techniques must be adhered to:

8.2.2.1 The sleeve is rotated into the soil in a clockwise direction only.

8.2.2.2 Advancement of the sleeve into the soil must follow the penetration sequence (one-half length of sleeve, three-fourths length of sleeve, etc.) determined in the calibration procedure.

8.2.2.3 The sleeve penetration into the soil should be perpendicular to the baseplate with as little variation as possible.

8.2.2.4 Soil should never be excavated from below the leading edge of the sleeve.

NOTE 1.–Because this test is sensitive to procedural techniques, an operator experienced in preforming in-place unit weight tests is recommended. Trial determinations should be performed before using the procedure as a basis of acceptance for construction control.

8.2.3 *Results Are Not Direct.*–A calibration equation must be applied to the mass of dry soil per inch of hole depth to arrive at the in-place unit weight.

9. Calibration and Standardization

9.1 Verify that equipment is currently calibrated in accordance with the applicable calibration procedure. If the calibration is not current, perform the calibration before using the equipment for this procedure. A calibration equation must be predetermined in accordance with USBR 7216 for the soil being tested.

10. Conditioning

10.1 Not applicable, special conditioning requirements are not needed for this procedure.

11. Procedure — Method A

11.1 All data are to be recorded on the "Sleeve Unit Weight Record" form as shown on figure 2.

NOTE 2.–Notice that on this form 1 lbm = 1 lbf so that the numerical value of density and unit weight are the same. This form is valid only when working in the inch-pound system.

11.2 Prepare a smooth, level working area at sufficient depth to avoid soils possibly disturbed by surface traffic. Place the baseplate on the designated area making sure it is in full contact with the soil surface and nail into place at each corner of the baseplate. Take care throughout the procedure not to apply pressure on the soil surface adjacent to the baseplate, as this could disturb the in-place condition of the soil. Construction or other activity in the vicinity of the test should be stopped to avoid disturbance of the soil by either pressure or vibration.

11.3 Place the beveled edge of the sleeve on the soil surface inside the hole in the baseplate. Place the driver on the sleeve. Slowly rotate the sleeve in a clockwise direction while pushing the sleeve into the soil in the exact penetration sequence determined in the calibration procedure. Penetrate the sleeve into the soil perpendicular to the baseplate with as little variation as possible.

11.4 Remove the driver and extract soil from inside the sleeve being careful not to disturb soil below the leading edge of the sleeve. A mark placed on the inside of the sleeve approximately 1 inch above the leading edge can be a very useful reference. Place the extracted soil in a moistureproof container. Continue rotating and advancing the sleeve and extracting soil in the sequence determined in the calibration procedure until the driver rests evenly

on the baseplate. Never extract soil below the leading edge of the sleeve.

11.5 As the full depth of extraction of soil is approached, flatten the bottom of the test hole as nearly as possible while extracting the soil.

11.6 Seal the container into which soil extracted from the sleeve has been placed to preserve the in-place moisture content.

11.7 Place the measurement plate on the soil at the bottom of the test hole and rotate gently to seat the plate. Lift the measurement plate and inspect the bottom of the test hole for surface irregularities. Inspect and smooth the surface if necessary, and then gently reseat the plate. Measure and record the depth of the test hole from the top of the measurement plate to the top of the baseplate using a trisquare or machinist's square. Perform the measurement four times, once at each keystock on the sleeve. Two measurements, 180° apart, are all that are necessary to determine the average depth of the test hole. However, since the depth measurement is critical, the two other measurements provide a useful check.

11.8 Calculate the average depth of the test hole using the measurements at two opposite keystocks. Calculate the average depth measured at the other two keystocks. If the two average depth values are not within 0.05 inch of each other, remeasure the depths. If the values are within 0.05 inch, use the first set of measurements to calculate the mass of dry soil per inch of test hole. It may be useful to place identifying marks at each keystock.

11.9 Determine and record, to the nearest 0.01 lbm, the mass of the soil removed from the test hole.

11.10 Determine and record the moisture content of the soil removed from the test hole in accordance with USBR 5300.

11.11 Calculate and record the dry mass of the soil removed from the test hole.

11.12 Calculate and record the dry mass of soil per inch of hole depth.

11.13 Using the calibration equation (USBR 7216), calculate the in-place dry unit weight and record.

12. Procedure — Method B

12.1 Follow the procedure as described for Method A through subparagraph 11.9.

12.2 Upon completion of subparagraph 11.9, ovendry the entire sample in accordance with USBR 5300 to determine the dry mass of soil removed from the test hole. Record the mass to the nearest 0.01 lbm.

NOTE 3.-The entire sample is ovendried because accurate moisture content determinations in the presence of free water in free draining soils are not practical. Since there is no specified control moisture content for placement of these soils, determination of a moisture content is not critical.

12.3 Calculate and record the dry mass of soil per inch of hole depth.

13. Calculations

13.1 Depth measurements are to be made to the nearest 0.01 inch or the nearest 1/64 inch converted to the nearest 0.01 inch. Calculate the average depth.

$$D_a = \frac{D_1 + D_2}{2} \quad (1)$$

where:

D_a = average depth of hole, in
D_1 = initial depth measurement, in
D_2 = measurement at opposite keystock, in

13.2 Calculate the moisture content and the dry mass of soil removed from the test hole.

$$w_f = 100\left(\frac{w_1 - w_2}{w_2}\right) \quad (2)$$

$$w_4 = \frac{w_3}{1 + \left(\frac{w_f}{100}\right)} \quad (3)$$

where:

w_f = moisture content in soil from test hole, %
w_1 = wet mass of moisture sample, lbm
w_2 = dry mass of moisture sample, lbm
w_3 = wet mass of the soil from the test hole, lbm
w_4 = dry mass of the soil from the test hole, lbm

13.3 Calculate the mass of dry soil per inch of test hole.

$$m = \frac{w_4}{D_a} \quad (4)$$

where:

m = mass of dry soil per inch of test hole, lbm/in
w_4 = dry mass of the soil from test hole, lbm
D_a = average depth of test hole, in

13.4 Calculate the in-place dry unit weight using the calibration equation as in the following example. (Assume 1 lbm = 1 lbf.)

$$\begin{aligned} \text{In-place dry unit weight} &= 47.769\ m - 38.8 \\ &= 47.769\ (2.85) - 38.8 \\ &= 97.3\ \text{lbf/ft}^3 \end{aligned} \quad (5)$$

where 47.769 and 38.8 are constants from a calibration equation (USBR 7216) and m = mass of dry soil per inch of test hole, lbm/in.

14. Report

14.1 The report is to consist of a completed and checked "Sleeve Unit Weight Record" form (fig. 2).

14.2 All calculations are to show a checkmark.

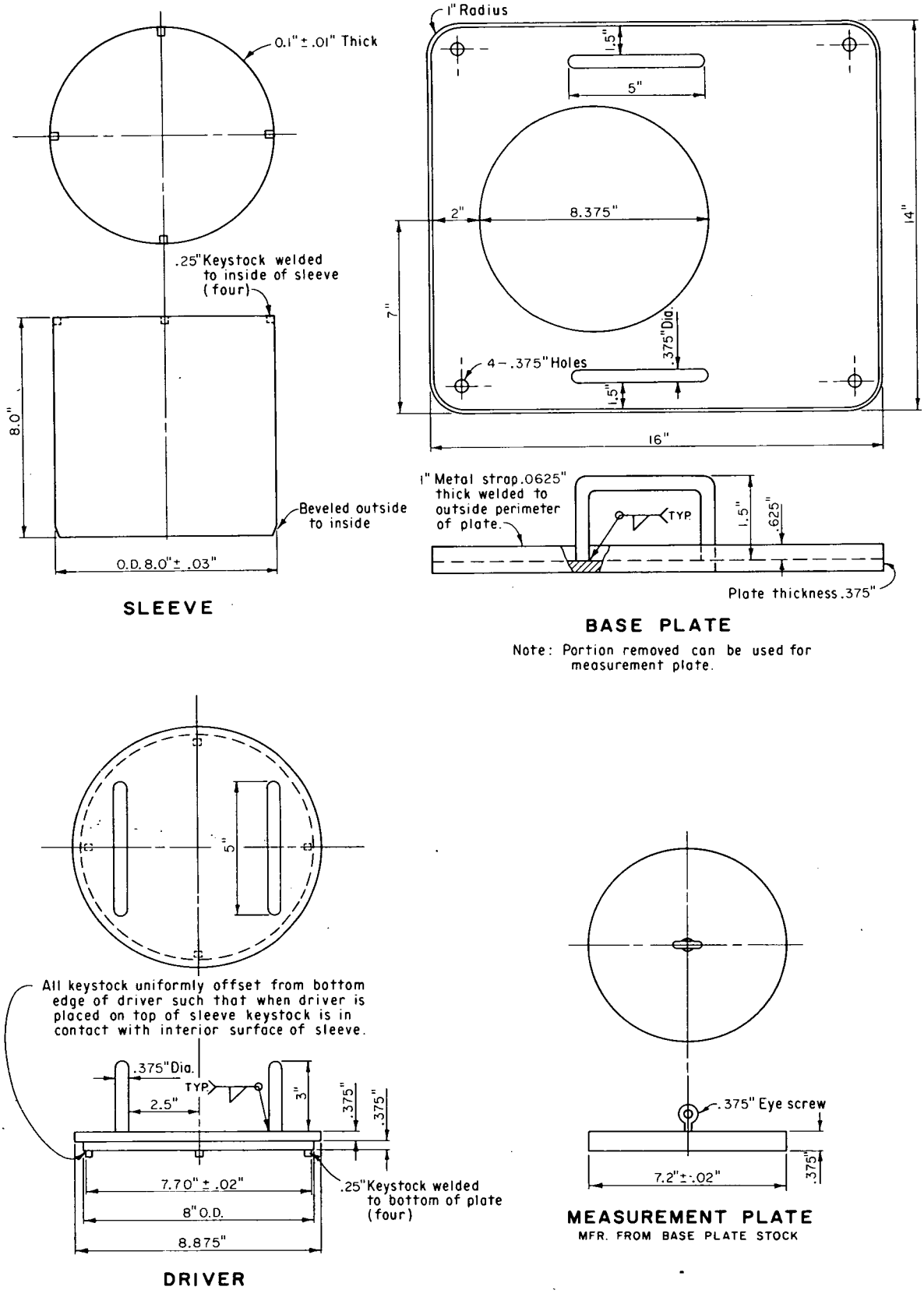

Figure 1. – In-place soil density equipment — sleeve apparatus.

7-2400 (12-86) Bureau of Reclamation	SLEEVE UNIT WEIGHT RECORD	Designtation USBR 7215 - 89

PROJECT	FEATURE	TEST NO.
Example		

LOCATION	OFFSET	ELEV	ZONE

SOIL IDENTIFICATION	SLEEVE IDENTIFICATION	SLEEVE INSERTION SEQUENCE

TESTED BY	DATE	COMPUTED BY	DATE	CHECKED BY	DATE

FIELD MEASUREMENTS:

1. DEPTH MEASUREMENTS	(a) 7.57 (b) 7.68		in
	(c) 7.53 (d) 7.42		in
2. AVERAGE DEPTH [(a + c)/2], [(b+ d)/2]	7.55 , 7.55		in
3. MASS OF WET SOIL + CAN		24.06	lbm
4. MASS OF CAN NO. 3		2.16	lbm
5. MASS OF WET SOIL (3) - (4)		21.90	lbm
6. MASS OF WET SOIL PER INCH OF HOLE DEPTH (5)/(2)		2.90	lbm
7. MASS OF DRY SOIL PER INCH OF HOLE DEPTH (M) $= \frac{(6)}{1 + (13)/100}$		2.85	lbm/in

MOISTURE DETERMINATION: USBR 5300 - 89

8. MASS OF WET SOIL + PAN	12.61	lbm
9. MASS OF DRY SOIL + PAN	12.42	lbm
10. MASS OF PAN NO. 13	2.18	lbm
11 MASS OF WATER (8) - (9)	0.19	lbm
12. MASS OF DRY SOIL (9) - (10)	10.24	lbm
13. MOISTURE CONTENT [(11) / (12)] x 100	1.9	%

IN-PLACE UNIT WEIGHT DETERMINATION:

14. CALIBRATION EQUATION

IN-PLACE DRY UNIT WEIGHT + (47.769) (M) + or $\ominus$ 38.8

15. IN-PLACE DRY UNIT WEIGHT [INSERT (7) INTO CALIBRATION EQUATION] = 97.3 lbf/ft^3

= (47.769)(2.85)-38.8

Figure 2. - Sleeve unit weight record — example.

UNITED STATES DEPARTMENT OF THE INTERIOR
BUREAU OF RECLAMATION

USBR 7216-89

PROCEDURE FOR

DETERMINING THE CALIBRATION EQUATION FOR THE UNIT WEIGHT OF SOILS IN-PLACE BY THE SLEEVE METHOD

INTRODUCTION

This procedure is under the jurisdiction of the Geotechnical Services Branch, code D-3760, Research and Laboratory Services Division, Denver Office, Denver, Colorado. The procedure is issued under the fixed designation USBR 7216. The number immediately following the designation indicates the year of acceptance or the year of last revision.

1. Scope

1.1 This designation outlines the procedure for determining the calibration equation for the unit weight of soil in place by the sleeve method.

1.2 The sleeve method of determining the unit weight of soil in place is used for cohesionless, granular soils for which other methods of measuring the unit weight (sand cone, etc.) may not be practical. Typically, these soils are predominantly fine gravel size having a maximum of 5 percent fines and a maximum particle size of 3/4-inch.

1.3 There may be certain soils meeting the general description in subparagraph 1.2 for which the calibration equation is not applicable or may be applicable for only a certain range of unit weights.

1.4 The calibration equation must be determined for a particular soil prior to using the sleeve method for determining the unit weight of that soil in place. A new calibration equation must be determined whenever there is a significant change in the gradation or particle angularity of the soil.

2. Auxiliary Tests

2.1 A representative field sample must be obtained in accordance with USBR *4075 or ASTM D 75 and prepared for laboratory use in accordance with USBR 5205. A gradation analysis must be performed on the sample in accordance with USBR 5325 to establish that it meets the criteria for sleeve testing. The minimum and maximum index unit weights of the soil sample must be determined in accordance with USBR 5525 and 5530, respectively, to establish the range of control unit weights to use in this procedure. The moisture content must be determined in accordance with USBR 5300 as part of performing this procedure.

3. Applicable Documents

3.1 *USBR Procedures*:
USBR 3900 Standard Definitions of Terms and Symbols Relating to Soil Mechanics
USBR *4075 Sampling Aggregates
USBR 5205 Preparing Soil Samples by Splitting or Quartering
USBR 5300 Determining Moisture Content of Soil and Rock by the Oven Method
USBR 5325 Performing Gradation Analysis of Gravel Size Fraction of Soils
USBR 5525 Determining the Minimum Index Unit Weight of Cohesionless Soils
USBR 5530 Determining the Maximum Index Unit Weight of Cohesionless Soils
USBR 7215 Determining the Unit Weight of Soils In-Place by the Sleeve Method

3.2 *ASTM Standard*:
D 75 Standard Practice for Sampling Aggregates

4. Summary of Method

4.1 Soil specimens are compacted to a control unit weight in a rigid container. Ten control unit weights ranging from near minimum index unit weight to near maximum index unit weight are used. At each control unit weight, five individual mass of dry soil per inch of hole depth determinations are performed. These data are used to determine an equation that defines the relationship between the sleeve *Mass of dry soil per inch of hole depth* and the *Control dry unit weight.*

5. Significance and Use

5.1 The calibration equation is used to determine the unit weight of soil in place measured by the sleeve method (USBR 7215).

5.2 The calibration equation is used to calculate the unit weight of soil in place from the mass of dry soil per inch of test hole depth measured by the sleeve method.

5.3 The unit weight of the soil in place calculated using the calibration equation has been determined to be a reliable value for use in the construction control of soils meeting the requirements as described in subparagraph 1.2.

5.4 It is assumed there is a linear relationship between the unit weight in place and the mass of dry soil per inch

* *Concrete Manual*, Bureau of Reclamation, part 2, in press.

of hole depth measured by the sleeve method. For certain soils this may not be true, or the linear relationship may exist for only a particular range of unit weights. After performing this procedure, the results must be analyzed and evaluated as to the applicability of the calibration equation.

6. Terminology

6.1 Definitions are in accordance with USBR 3900.

6.2 Terms not included in USBR 3900 specific to this designation are:

6.2.1 *Baseplate.*–Template as shown on figure 1.

6.2.2 *Sleeve.*–An 8.0-inch-outside diameter, 8.0-inch-long cylinder constructed of steel 0.1 ± 0.01 inch thick (see fig. 1).

6.2.3 *Measurement Plate.*–A circular steel plate with a 7.2-inch diameter and constructed from the same stock as the baseplate (see fig. 1).

6.2.4 *Keystock.*–Piece of metal welded to sleeve and to the driver (see fig. 1).

6.2.5 *Driver.*–A circular steel plate which fits on the top of the sleeve and is an aid in pushing the sleeve into the soil (see fig. 1).

6.2.6 *Calibration Container.*–Large rigid container for performing the control unit weight tests used in determining the calibration equation.

6.2.7 *Calibration Equation.*–The calibration equation defines the relationship between the unit weight of a soil in place and the mass of dry soil per inch of test hole depth measured by the sleeve method. A linear relationship is assumed to exist between the two values.

6.2.8 *Control Unit Weight.*–The known unit weight of soil as placed in the calibration container.

7. Apparatus

7.1 *General Apparatus*:

7.1.1 *Drying Oven.*–An oven, thermostatically controlled, preferably of the forced-draft type, and capable of maintaining a uniform temperature of 230±9 °F (110±5 °C) throughout the drying chamber

7.1.2 *Balance or Scale.*–A typical balance or scale used for this designation must be readable to 0.01 lbm and have a capacity of about 100 lbm.

7.1.3 *Vernier or Inside Micrometer Caliper.*–Caliper of sufficient length to measure the inside diameter of a sleeve and readable in increments of 0.01 inch.

7.2 *Equipment Unique to This Test Procedure*:

7.2.1 *Sleeve Apparatus.*–Sleeve baseplate, sleeve, measurement plate, and driver (see fig 1).

7.2.2 *Calibration Container.*–Container constructed with smooth walls and floor and rigid enough so that its shape and volume do not change during performance of calibration testing. The inside depth should be about 1 foot and have an inside area of 12 to 14 ft^2. A suitable method for draining excess water should be provided.

7.2.3 *Screed.*–Straight, rigid length of wood or metal used to strike off a level surface on the soil specimen in the calibration container.

7.3 *Miscellaneous Equipment.*–A measuring tape readable to 1/16 inch and of sufficient length to measure the inside dimensions of the calibration container; a vibrator for densifying the soil specimen; shovel for preparing test surface; nails and hammer for securing sleeve baseplate; scoops and spoons for digging test hole; buckets with lids or other suitable containers for retaining the sample without moisture loss; and a trisquare or machinist's square for measuring the depth of the test hole.

8. Reagents and Materials

8.1 Tapwater that is free of acids, alkalies, or oils, and is suitable for drinking should be used, as required, when compacting the soil specimen.

9. Precautions

9.1 *Safety Precautions.*–This designation may involve hazardous materials, operations, and equipment.

9.2 *Technical Precautions*:

9.2.1 The sleeve should be perpendicular to the baseplate when pushed into the soil. Care should be taken to rotate the sleeve consistently in a clockwise direction while performing the test.

9.2.2 The soil sample used to determine the calibration equation must be representative of the soil that will be tested using the sleeve method. If the soil will range significantly in gradation, the calibration equation should be determined on samples of the soil representing the coarsest, average, and finest gradations.

9.2.3 The control unit weight must be uniform throughout the calibration container. The container should have smooth walls and floor and be rigid enough so that its shape or volume do not change during performance of calibration testing. A surface area of 12 to 14 ft^2 is sufficient. A larger size may create difficulty in maintaining a uniform unit weight throughout the container.

9.2.4 The sleeve(s) should be checked periodically for wear (see subpar. 11.2). If the beveled edge has become dull or damaged, it may be repaired if the original angle and length of the bevel is maintained.

9.2.5 The pattern of sleeve advancement established in the trial run must be followed for each sleeve mass of dry soil per inch of hole depth determination.

10. Sampling, Test Specimens, and Test Units

10.1 Prepare a 1,000- to 3,000-lbm test sample of the soil in accordance with USBR 5205.

10.2 Five tests are required for each control unit weight condition tested in the calibration container, and a minimum of 10 control unit weights are required.

11. Calibration and Standardization

11.1 Verify that equipment is currently calibrated in accordance with the applicable calibration procedure. If the calibration is not current; perform the calibration before using the equipment for this procedure.

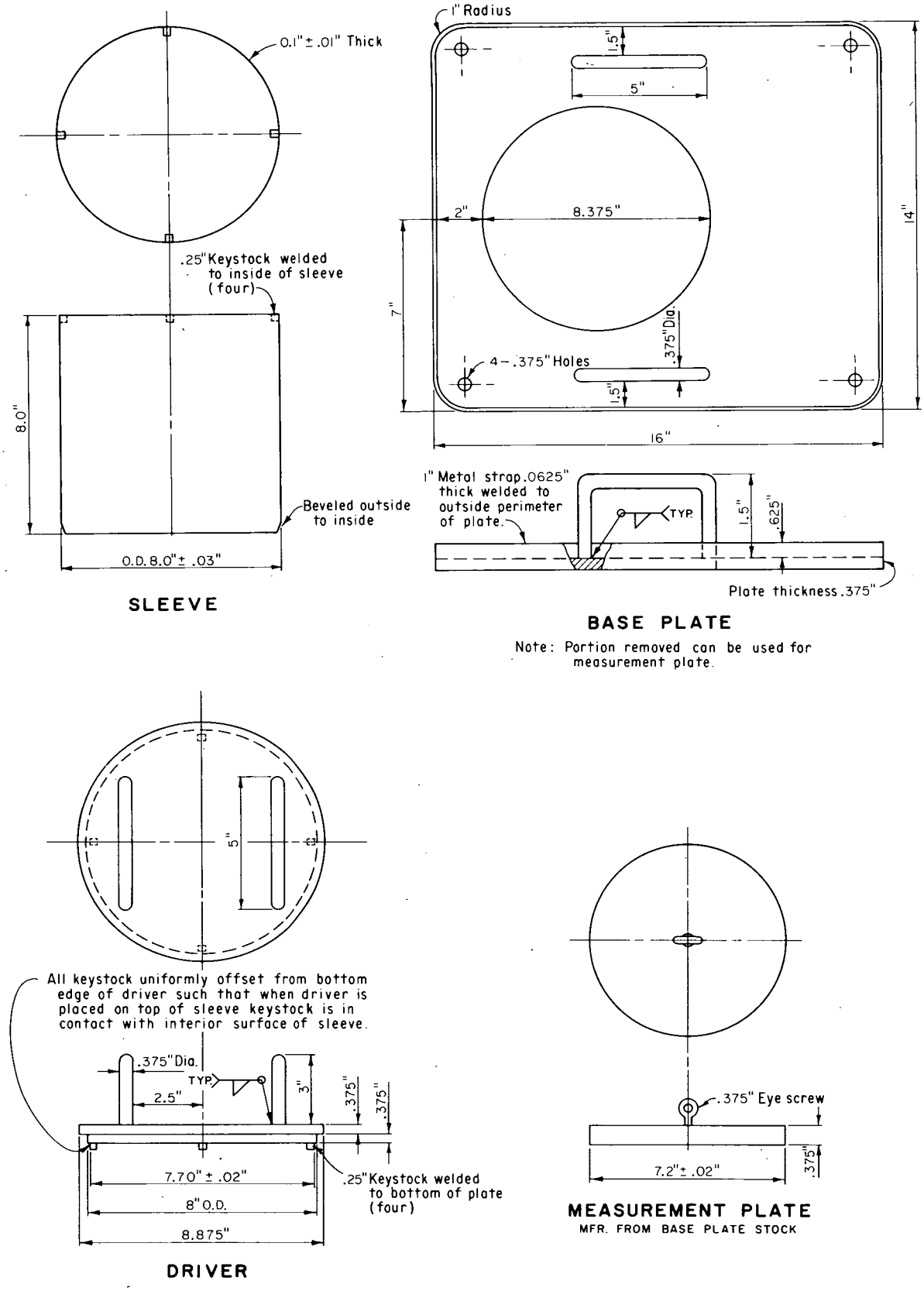

Figure 1. – In-place soil density equipment — sleeve apparatus.

11.2 *Sleeve*:

11.2.1 Permanently mark each steel sleeve for identification.

11.2.2 Using either a vernier caliper or an inside micrometer caliper, determine the inside diameter of the beveled end of the sleeve. Make three measurements, just above the bevel, equally spaced around the circumference of the sleeve. Record these measurements to the nearest 0.01 inch as shown on figure 2, "Sleeve Calibration" form.

11.2.3 If any two measurements differ by 0.10 inch or more, the sleeve is out of round and should be discarded.

11.2.4 Check the sleeve for wear after every 100 tests. If the average of the three measurements varies more than 0.05 inch from the initial average obtained during the sleeve-soil calibration, a new calibration equation determination is required.

11.3 *Sleeve Baseplate and Measurement Plate.*–Mark the sleeve baseplate and measurement plate permanently for identification. These are mating items and must be used together.

11.4 *Calibration Container*:

11.4.1 Measure and record the width, length, and height of the container at four different locations each; obtain average dimensions as shown on figure 3, "Sleeve-Soil Calibration Container Record" form. Measurements are to be made in inches to the nearest 1/16 inch.

11.4.2 Compute and record the volume of the container (subpar. 14.1.1 and fig. 3).

12. Conditioning

12.1 Conduct the calibration inside the laboratory under conditions that allow preservation of a uniform soil moisture content.

12.2 Precondition the soil sample to a uniform moisture content.

13. Procedure

13.1 Determine the maximum and minimum index unit weights of the soil specimen in accordance with USBR 5525 and 5530. Record the data on the "Summary of Sleeve-Soil Calibration Test Results" form (fig. 4).

13.2 Select 10 control unit weights ranging from near minimum index unit weight to near maximum index unit weight.

NOTE 1.–In cases where the variation from minimum to maximum index unit weight is small, it may be necessary to use two series of five control unit weights each, repeating some of the unit weights.

13.3 Determine the moisture content of the conditioned sample in accordance with USBR 5300.

13.4 Perform a trial run at a high unit weight (95% relative density or higher) to establish a sequence of depths used for advancing the sleeve into the soil (i.e., one-half, three-fourths, and full depth). A pattern of sleeve advancement is required for each sleeve-soil calibration to ensure that the disturbance caused by insertion of the sleeve is constant and, therefore, correctly accounted for in the calibration equation. It may be useful to record the data on the appropriate form as part of the trial run, but these data are not necessary as a permanent record except that the pattern of sleeve advancement should be recorded and posted for reference.

13.4.1 Multiply the unit weight corresponding to 95 percent relative density by the volume of the calibration container to arrive at the mass of dry soil necessary for the trial run. Compute the wet mass by multiplying the dry mass by 1 plus the moisture content expressed as a decimal.

13.4.2 Conduct the trial run by performing subparagraphs 13.5.4 through 13.5.15.

13.5 Conduct a control unit weight testing sequence.

13.5.1 All data are to be recorded on the "Sleeve-Soil Calibration" form as shown on figure 5. This form is valid only when working in the inch-pound system of units.

NOTE 2.–For this application, a 1-pound mass is considered to be numerically equal to a 1-pound force.

13.5.2 To minimize emptying and refilling the calibration container, begin at a low control unit weight and increase the unit weight for each succeeding trial. Adding soil into the calibration container and compacting to attain a new control unit weight may be repeated twice without removing the soil. After the second addition of soil and the following testing sequence, the soil must be *thoroughly* mixed within the container or be removed from the container and mixed before recompaction. This minimizes variations in unit weight within the container.

13.5.3 Calculate and record the mass of dry soil necessary for the initial control unit weight by multiplying the unit weight by the volume of the container. Compute and record the wet mass by multiplying the dry mass by 1 plus the moisture content expressed as a decimal. The moisture obtained in subparagraph 13.3 may be used if appropriate. If not, determine and record the moisture content.

13.5.4 Select enough soil to fill the container and place uniformly in the calibration container. Using a screed, level the soil with the top edge of the container. Collect the excess soil, and determine and record its mass. Subtract and record the mass of the excess soil from the total mass. Compute and record the dry unit weight of the soil in the calibration container (control dry unit weight) (subpar. 14.1.2) as shown on figure 5.

13.5.5 Keeping in mind that five tests are required for each control unit weight, select an area in the calibration container to begin testing. Place the baseplate on the designated area making sure it is in full contact with the soil surface, and carefully nail into place at each corner of the baseplate. Take care throughout the procedure not to apply pressure on the soil surface adjacent to the baseplate as this could disturb the in-place condition of the soil.

13.5.6 Place the beveled edge of the sleeve on the soil surface inside the hole in the baseplate. Place the driver

7-2401 (12-86) Bureau of Reclamation	SLEEVE CALIBRATION	Designation USBR 7216 - 89
PROJECT Example	FEATURE	
SLEEVE IDENTIFICATION	SOIL IDENTIFICATION	
CALIBRATION PERFORMED BY DATE	CALIBRATION CHECKED BY DATE	

INSIDE DIAMETER OF SLEEVE ABOVE BEVEL: ———————

(1) 7.76 in

(2) 7.78 in

(3) 7.77 in

AVERAGE INSIDE DIAMETER: $\frac{(1) + (2) + (3)}{3}$ 7.77 in

IF ANY TWO OF THE ABOVE MEASUREMENTS DIFFER BY 0.10 INCH OR MORE, THE SLEEVE IS OUT OF ROUND AND SHOULD BE DISCARDED. REPEAT THE CALIBRATION FOR EVERY 100 TESTS PERFORMED. IF THE AVERAGE OF THE MEASUREMENTS VARIES MORE THAN 0.05 INCH FROM THE INITIAL AVERAGE OBTAINED DURING THE SLEEVE-SOIL CALIBRATION, A NEW CALIBRATION EQUATION DETERMINATION IS REQUIRED.

100 TEST CALIBRATION:

INSIDE DIAMETER OF SLEEVE ABOVE BEVEL: ———————

(1) _____ in

(2) _____ in

(3) _____ in

AVERAGE INSIDE DIAMETER: $\frac{(1) + (2) + (3)}{3}$ _____ in

200 TEST CALIBRATION:

INSIDE DIAMETER OF SLEEVE ABOVE BEVEL: ———————

(1) _____ in

(2) _____ in

(3) _____ in

AVERAGE INSIDE DIAMETER: $\frac{(1) + (2) + (3)}{3}$ _____ in

Figure 2. – Sleeve calibration — example.

7-2403 (12-86) Bureau of Reclamation	SLEEVE-SOIL CALIBRATION CONTAINER RECORD	Designation USBR 7216 - 89
PROJECT: Example	FEATURE:	
MEASUREMENTS BY: DATE:	CHECKED BY: DATE:	

1. AVERAGE CONTAINER WIDTH (FOUR MEASUREMENTS REQUIRED)

($26\frac{10}{16}$ + $26\frac{11}{16}$ + $26\frac{12}{16}$ + $26\frac{15}{16}$) /4 = 26.75 in

2. AVERAGE CONTAINER LENGTH (FOUR MEASUREMENTS REQUIRED)

($74\frac{12}{16}$ + $74\frac{12}{16}$ + $74\frac{13}{16}$ + $74\frac{11}{16}$) /4 = 74.75 in

3. AVERAGE CONTAINER HEIGHT (FOUR MEASUREMENTS REQUIRED)

($10\frac{14}{16}$ + $10\frac{15}{16}$ + 11 + $10\frac{15}{16}$) /4 = 10.94 in

4. CONTAINER VOLUME:

$$= \frac{\text{LENGTH X WIDTH X HEIGHT}}{1728}$$

12.66 ft^3

Figure 3. - Sleeve-soil calibration container record — example.

7-2404 (12-86)
Bureau of Reclamation

SUMMARY OF SLEEVE-SOIL CALIBRATION TEST RESULTS

Designation USBR 7216 - 89

PROJECT	FEATURE	SLEEVE IDENTIFICATION	SOIL IDENTIFICATION
Example			
ASSEMBLED BY	DATE	CHECKED BY	DATE

CALIBRATION CONTAINER CONTROL UNIT WEIGHT (lbf/ft^3)	MASS OF DRY SOIL PER INCH OF HOLE DEPTH (lbm/in)				
	1	2	3	4	5
91.8	2.62	2.69	2.77	2.70	2.69
92.8	2.73	2.76	2.77	2.80	2.79
93.8	2.85	2.78	2.83	2.70	2.73
94.8	2.81	2.81	2.74	2.80	2.80
95.9	2.86	2.87	2.80	2.83	2.84
96.9	2.83	2.87	2.85	2.88	2.86
97.9	2.82	2.85	2.93	2.92	2.83
100.0	2.89	2.88	2.96	2.92	2.89
102.1	2.97	2.88	2.95	2.95	2.91
102.1	2.91	2.96	2.96	2.97	2.95
104.1	2.92	2.97	3.01	3.01	3.01

AUXILIARY TESTS

USBR 4075 - 89

USBR 5205 - 89

USBR 5300 - 89

USBR 5325 - 89

USBR 5525 - 89

USBR 5530 - 89

MAIL TO THE E&R CENTER (D-1540) FOR ANALYSIS.

MINIMUM INDEX UNIT WEIGHT = 90.7 lbf/ft^3

MAXIMUM INDEX UNIT WEIGHT = 104.9 lbf/ft^3

Figure 4. – Summary of sleeve-soil calibration test results — example.

7-2402 (12-86) Bureau of Reclamation	SLEEVE-SOIL CALIBRATION		Designation USBR 7216 - 99
PROJECT: EXAMPLE	FEATURE	SLEEVE IDENTIFICATION	
SOIL IDENTIFICATION	% GRAVEL	% SAND	% FINES
CALIBRATION PERFORMED BY / DATE		CALIBRATION CHECKED BY / DATE	

CONTROL DRY UNIT WEIGHT DETERMINATION:

1. DESIRED CONTROL DRY UNIT WEIGHT (DRY DENSITY)	91.8	lbf/ft^3 (lbm/ft^3)
2. VOLUME OF CALIBRATION CONTAINER	12.66	ft^3
3. DRY MASS OF SOIL REQUIRED: DRY DENSITY(1) X VOLUME(2)	1162.2	lbm
4. MOISTURE CONTENT OF SOIL, w	0.3	%
5. WET MASS OF SOIL REQUIRED: DRY MASS(3) X (1 + w/100)	1165.7	lbm
6. WET MASS OF SOIL NOT USED	—	lbm
7. WET MASS OF SOIL USED: (5) - (6)	1165.7	lbm
8. DRY MASS OF SOIL USED: WET MASS(7) / (1 + w/100)	1162.2	lbm
9. CONTROL DRY UNIT WEIGHT (DRY DENSITY): DRY MASS(8) / VOLUME (2)	91.8	lbf/ft^3 (lbm/ft^3)

TEST SERIES: FIVE TRIALS REQUIRED PER CONTROL UNIT WEIGHT

	TRIAL: 1	2	3	4	5	
10. DEPTH MEASUREMENTS (a)	7.06	6.90	6.98	6.88	6.63	in
(b)	7.08	6.91	7.13	6.79	6.70	in
(c)	7.10	6.98	7.28	6.74	6.77	in
(d)	7.08	6.95	7.13	6.83	6.70	in
11. AVERAGE DEPTH: A = [(10a) + (10c)] /2	7.08	6.94	7.13	6.81	6.70	in
B = [(10b) + (10d)] /2	7.08	6.93	7.13	6.81	6.70	in
12. MASS OF WET SOIL + CAN	21.16	21.28	22.36	21.00	20.63	lbm
13. MASS OF CAN NO. 2	2.55	2.55	2.55	2.55	2.55	lbm
14. MASS OF WET SOIL: (12) - (13)	18.61	18.73	19.81	18.45	18.08	lbm
15. MASS OF DRY SOIL: (14) / (1+w/100)	18.55	18.67	19.75	18.39	18.03	lbm
16. MASS OF DRY SOIL PER INCH OF HOLE DEPTH: (15) / (11A)	2.62	2.69	2.77	2.70	2.69	lbm/in

AUXILIARY TESTS: USBR 5300-89

Figure 5. – Sleeve-soil calibration — example.

on the sleeve. Slowly rotate the sleeve in a clockwise direction while pushing the sleeve into the soil to the initial depth as determined in the trial run. The sleeve penetration into the soil should be perpendicular to the baseplate with as little variation as possible.

13.5.7 Remove the driver and extract soil from inside the sleeve, being careful not to disturb soil below the leading edge of the sleeve. A mark placed on the inside of the sleeve, about 1 inch above the leading edge, can be a useful reference. Place the extracted soil in a moisture-proof container. Continue rotating and advancing the sleeve and extracting soil in the sequence established in the trial run until the driver rests evenly on the baseplate. Soil below the leading edge of the sleeve should never be extracted.

13.5.8 As the full depth of extraction of soil is approached, flatten the bottom of the test hole as much as possible while extracting the soil. Place the measurement plate on the soil at the bottom of the test hole and gently rotate to seat the plate.

13.5.9 Lift the measurement plate, and inspect the bottom of the test hole for surface irregularities. After inspecting and smoothing the surface, if necessary, gently reseat the plate.

13.5.10 Measure and record the depth of the test hole from the top outside edge of the measurement plate to the top of the baseplate to the nearest 1/64 or 0.01 inch using a trisquare or machinist's square. Perform the measurement four times, once at each keystock on the sleeve. Only two measurements—180 degrees apart—are necessary to determine the average depth of the test hole. However, since the depth measurement is critical, the two other measurements provide a useful check.

13.5.11 Calculate the average depth of the test hole using the measurements at two opposite keystocks. Calculate the average depth measured at the other two keystocks. If the two average depth values are not within 0.05 inch of each other, remeasure the depths. If the values are within 0.05 inch, use the first set of measurements to calculate the mass of dry soil per inch of test hole.

13.5.12 Determine the wet mass of the soil removed from the test hole and record to the nearest 0.01 lbm.

13.5.13 Remove the measurement plate, replace the soil in the test hole, remove the baseplate, and slowly remove the sleeve. Do not disturb the soil remaining in the calibration container.

13.5.14 Determine the dry mass of the sample (fig. 5). Divide the dry mass by the average depth of the test hole to determine the mass of dry soil per inch of hole depth (lbm/in) as shown on figure 5.

13.5.15 Repeat subparagraphs 13.5.5 through 13.5.14 four times each at different locations for a total of five *Mass of dry soil per inch of hole depth* determinations per control unit weight. Always advance the sleeve to the depths as determined in the initial high unit weight trial run.

13.6 Add soil and compact to the next control unit weight.

13.6.1 Calculate the amount of soil needed for the next control unit weight as in subparagraph 13.5.3.

13.6.2 Subtract the mass of the soil in the container from the mass calculated in subparagraph 13.6.1 to determine the amount of additional soil necessary.

13.6.3 Evenly distribute the added soil over the surface area of the container, and compact it with a concrete vibrator at well spaced locations. This process may be aided by uniformly tapping the sides of the container at even intervals.

13.6.4 If the addition of water is necessary to achieve the desired unit weight, adequate time for drainage must be allowed before beginning the next sequence of tests and a new moisture content determined. Extreme care should be taken to maintain a uniform unit weight throughout the calibration container.

13.7 Repeat subparagraphs 13.5.1 through 13.6.4 for each control unit weight selected in subparagraph 13.2.

13.8 Tabulate all data on the "Summary of Sleeve-Soil Calibration Test Results" form as shown on figure 4. Label the computed dry unit weight—of the soil in the calibration container—as the *Calibration container control dry unit weight* (see fig. 4).

13.9 Determine the calibration equation using appendix X1. (This will be done at the Bureau's Denver Office.)

14. Calculations

14.1 Determine the in-place (control) unit weight.

14.1.1 Calculate the volume of the calibration container (see fig. 3).

$$V = \frac{l\,w\,h}{1{,}728}$$

where:

V = volume of container, ft³
l = average length, in
w = average width, in
h = average height, in
1,728 = change cubic inch to cubic foot

14.1.2 Calculate the control dry unit weight (see fig. 5, line 9) by dividing the *Dry mass of soil used* by the volume of calibration container. Dry unit weight values should be rounded to 0.1 lbf/ft³.

14.2 Compute the *Mass of dry soil per inch of hole depth.*

14.2.1 Divide the sum of the initial *Depth measurements* by 2 to find the *Average depth* (see fig. 5, line 11).

14.2.2 Divide *Mass of dry soil* removed from the test hole by the *Average depth* to find the *Mass of dry soil per inch of hole depth* (see fig. 5, line 16).

14.3 Transmit all data to the Bureau's Denver Office for determination of the calibration equation (see app. X1).

15. Report

15.1 Officially transmit all related information and tabulations to:

Bureau of Reclamation
Attn: Code D-3760
PO Box 25007
Denver CO 80225

The following information is required:

- Written description and photograph of calibration container.
- Gradation analysis of material.
- Written description of angularity of material with photograph.
- Completed form: "Summary of Sleeve-Soil Calibration Test Results" (fig. 4).
- Copies of data forms from the performance of tests in USBR 5525 and 5530.

15.2 The calibration equation and related information will be officially transmitted to the project. Examples of such information are:

- An official memorandum detailing the soil identification, the calibration equation, and instructions for use of the equation.
- A graphic plot of the calibration equation (see fig. X1.1).

APPENDIX

X1. CALIBRATION EQUATION DOCUMENTATION

X1.1 *Test Data.*–The descriptive information and test data received at the Denver Office are studied for acceptability. Items of particular concern are:

1. Calibration container construction to ensure that a constant volume is maintained throughout the procedure.
2. Possible eccentricities in the angularity of the soil particles that may cause difficulty in uniform sleeve penetration.
3. Establishment of a reliable calibration equation for the material tested.
4. Existence of a reliable and representative linear relationship for the entire range of unit weights listed or for only part of the range.

X1.2 *Computer Program.*–An analysis program "SLEEVE" processes the data. The program is on disk for use with the Tektronix 4051 minicomputer and Tektronix 4662 interactive digital plotter. It is available at the Denver Office (Research and Laboratory Services Division, Geotechnical Services Branch, Geomechanics and Research Section, code D-3762). The program computes the constants of the equation for the linear relationship of the calibration data points. The technique used is linear regression by the method of least squares. Control unit weight (unit weight of soil in the calibration container) is the dependent variable plotted on the *X*-axis, and the mass of dry soil per inch of test hole (series of tests at each control unit weight) is the independent variable plotted on the *Y*-axis. The least squares best-fit equation[1] is calculated, and the data points and best-fit line are graphically plotted as shown on figure X1.1. The calibration equation used to solve for in-place dry unit weight, *X*, derived from the best-fit line equation also is included on the plot.

The plot, with any special instruction for using the calibration equation, is transmitted to the field by official memorandum.

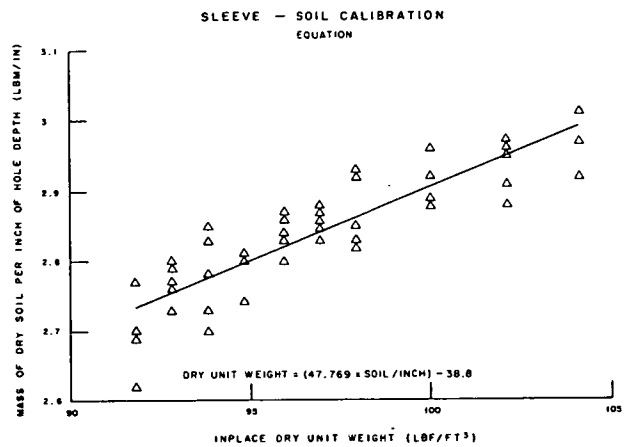

Figure X1.1 – Calibration equation for unit weight of soil in-place by the sleeve method — example.

[1] Young, Hugh D., *Statistical Treatment of Experiment Data*, McGraw-Hill Book Company Inc., New York, pp. 121-123, 1962.

UNITED STATES DEPARTMENT OF THE INTERIOR
BUREAU OF RECLAMATION

PROCEDURE FOR

USBR 7220-89

DETERMINING UNIT WEIGHT OF SOILS IN-PLACE BY THE SAND REPLACEMENT METHOD IN A TEST PIT

INTRODUCTION

This procedure is under the jurisdiction of the Geotechnical Services Branch, code D-3760, Research and Laboratory Services Division, Denver Office, Denver, Colorado. The procedure is issued under the fixed designation USBR 7220. The number immediately following the designation indicates the year of acceptance or the year of last revision.

1. Scope

1.1 This designation outlines the procedure for determining the in-place unit weight of soils using a pouring device and calibrated sand to determine the volume of a test pit.

1.2 This procedure is applicable for soils containing more than 20-percent particles that would be retained on the 1-1/2-inch (37.5-mm) sieve and, therefore, can be used when USBR 7205 (sand-cone method) is inappropriate.

1.2.1 Use of this procedure is appropriate to determine the volume of test pits up to about 6 ft^3. It may be used for larger sized excavations if desirable. However, for larger sized excavations, USBR 7221 (water replacement method) is preferred.

1.2.2 USBR 7205 and/or USBR 7206 are usually used to determine the volume of test holes smaller than 1-1/2 ft^3.

1.3 Two methods are provided.

1.3.1 Method A — In-place unit weight of total material.

1.3.2 Method B — In-place unit weight of control fraction.

1.3.2.1 If the in-place soil contains particles larger than the maximum particle size permitted in the laboratory unit weight test(s), the soil is considered to consist of two fractions, or portions. The soil from the in-place unit weight test is physically divided into a control fraction and an oversize fraction based on a designated sieve size. The unit weight of the control fraction is calculated and compared with the unit weight(s) established by the standard laboratory test(s).

1.3.2.2 Normally, the control fraction is the minus No. 4 (4.75-mm) sieve size material for cohesive soils and the minus 3-in (75-mm) sieve size material for cohesionless soils.

1.3.3 Method A is used when the in-place unit weight of total material is to be determined regardless of particle sizes. If there is no oversize present, the in-place unit weight of the total material can be compared directly to the laboratory unit weight(s).

1.3.4 Method B is used when the in-place soil being tested contains 3 percent or more oversize.

1.4 Any soil or other material that can be excavated with handtools can be tested provided the void or pore openings in the mass are small enough (or a liner used) to prevent the calibrated sand used in the test from entering the natural voids. The soil or other material being tested should have sufficient cohesion or particle attraction to maintain stable sides during excavation of the test pit and through completion of this test. It also should be firm enough not to deform or slough due to the minor pressures exerted in digging the hole and pouring the sand.

1.5 This procedure is limited generally to soil in an unsaturated condition and is not recommended for soils that are soft or friable (crumble easily) or in a moisture condition such that water seeps into the hand-excavated hole. The accuracy of the test may be affected for soils that deform easily or that may undergo volume change in the excavated hole from standing or walking near the hole during the test.

2. Auxiliary Tests

2.1 The moisture content of the soil must be determined in accordance with USBR 5300 in order to calculate dry unit weight values. The bulk specific gravity of any oversize material must be determined in accordance with USBR 5320 in order to calculate the volume of the oversize removed from the test pit. The density of the calibrated sand must be determined in accordance with USBR 1436 prior to performing this procedure.

3. Applicable Documents

3.1 *USBR Procedures*:

USBR 1436 Calibrating Sand Pouring Equipment and Sand
USBR 3900 Standard Definitions of Terms and Symbols Relating to Soil Mechanics
USBR 5205 Preparing Soil Samples by Splitting or Quartering
USBR 5300 Determining Moisture Content of Soil and Rock by the Oven Method
USBR 5320 Determining Specific Gravity of Soils
USBR 5525 Determining the Minimum Index Unit Weight of Cohesionless Soils
USBR 5530 Determining the Maximum Index Unit Weight of Cohesionless Soils

USBR 7205 Determining Unit Weight of Soils In-Place by the Sand-Cone Method
USBR 7206 Determining Unit Weight of Soils In-Place by the Rubber Balloon Method
USBR 7215 Determining the Unit Weight of Soils In-Place by the Sleeve Method
USBR 7221 Determining Unit Weight of Soils In-Place by the Water Replacement Method in a Test Pit
USBR 7240 Performing Rapid Method of Construction Control
USBR 7250 Determination of Percent Relative Density
USBR 7255 Determining the Percent Compaction of Earthwork for Construction Control

3.2 *ASTM Standard*:
E 11 Specification for Wire-Cloth Sieves for Testing Purposes

4. Summary of Method

4.1 The ground surface at the test location is prepared and a template (metal frame) is placed and fixed into position. The volume of the space between the top of the template and the ground surface is determined by pouring calibrated sand into the space using a pouring device. The mass of the sand required to fill the template in place is determined and the sand removed. Soil from within the boundaries of the template is excavated forming a pit. Then, calibrated sand is poured into the pit and template; the mass of sand within the pit and the volume of the hole are determined. The wet unit weight of the in-place soil is calculated from the mass of soil removed and the measured volume of the test pit. The moisture content is determined and then the dry unit weight of the in-place soil is calculated.

4.2 The unit weight of a control fraction of the soil can be determined by subtracting the mass and volume of any oversize from the initial values and recalculating the unit weight.

5. Significance and Use

5.1 This procedure is used to determine the in-place unit weight of compacted soils in construction of earth embankments, road fill, and structure backfill. For construction control, it is often used as the basis for acceptance of soil compacted to a specified unit weight or to a percentage of a maximum unit weight determined by a standard laboratory test method.

5.2 This procedure can be used to determine in-place unit weight of natural soil deposits, aggregates, soil mixtures, or other similar material.

6. Terminology

6.1 Definitions are in accordance with USBR 3900.

6.2 Terms not included in USBR 3900 specific to this designation are:

6.2.1 *Control Fraction.*–The portion of a soil sample consisting of particles smaller than a designated sieve size. This fraction is used to compare in-place unit weights with standard laboratory unit weights. The control sieve size depends on the laboratory test used.

6.2.2 *Oversize.*–The portion of a soil sample consisting of the particles larger than a designated sieve size.

7. Apparatus

7.1 *General Apparatus*:

7.1.1 *Balance or Scale.*–A typical balance or scale used to determine moisture content must be readable to 0.1 g and have a capacity of about 1000 g.

7.1.2 *Balance or Scale.*–A typical balance or scale used to determine the mass of the calibrated sand and the excavated soil must be readable to 0.01 lbm and have a capacity of about 50 lbm.

7.1.3 *Drying Oven.*–An oven, thermostatically controlled, preferably of the forced-draft type, and capable of maintaining a uniform temperature of 230±9 °F (110±5 °C) throughout the drying chamber.

7.1.4 *Sieves.*–U.S.A. Standard series No. 4 sieve (4.75-mm) and 3-inch (75-mm) sieve, conforming to the requirements of ASTM E 11.

7.2 *Equipment Unique to This Procedure*:

7.2.1 *Metal Template* (see fig. 1).

NOTE 1.–The template shown on figure 1 represents a design that has proved satisfactory. Square or circular templates of other dimensions may be used as long as the template is rigid enough to serve as a pattern for the excavation.

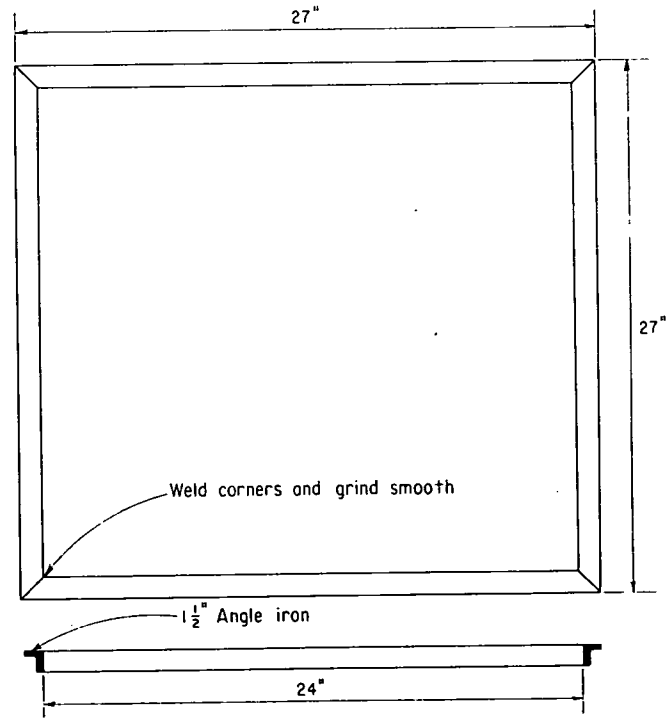

Figure 1. – Square template.–The template represents a design that has proved satisfactory. Template dimensions will vary according to the size of the test pit to be excavated. Other sizes may be used as long as the template is rigid enough to serve as a pattern for the excavation.

7.2.2 *Plastic Sheet.*–Plastic sheeting, about 1/2-mil (0.0005-inch) thick and large enough to line the test pit with about 1 foot extending beyond the outside of the template.

7.2.3 *Pouring Equipment.*–Sand pouring devices (see fig. 2 for typical devices).

7.2.4 *Straightedge.*–Metal straightedge about 2 inches high, at least 1/8-inch thick, and having a length 1.5 times the side length (or diameter) of the metal template.

7.2.5 *Calibrated Sand.*–The sand must meet the requirements specified in USBR 1436.

7.3 *Miscellaneous Equipment.*–Shovels for preparing test surface; hammer for seating template; assorted small brushes, picks, chisels, bars, knives, and spoons for digging test pit; buckets with lids, seamless cans with lids, or other

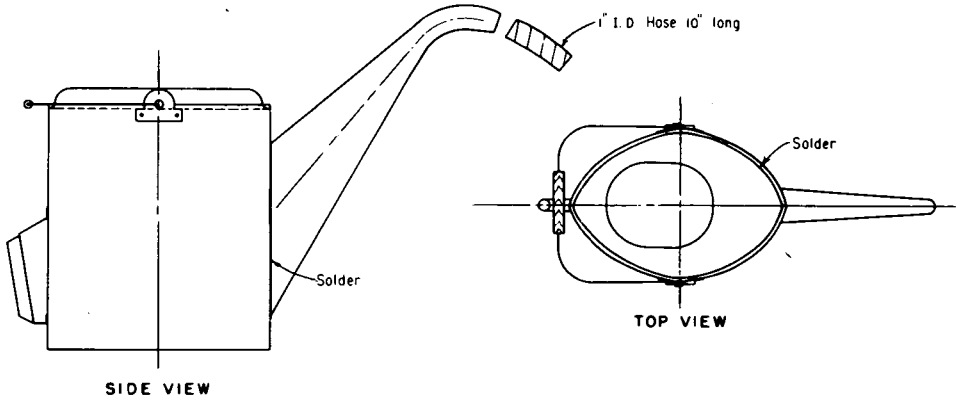

RADIATOR FILLER CAN
(12 Qt capacity)

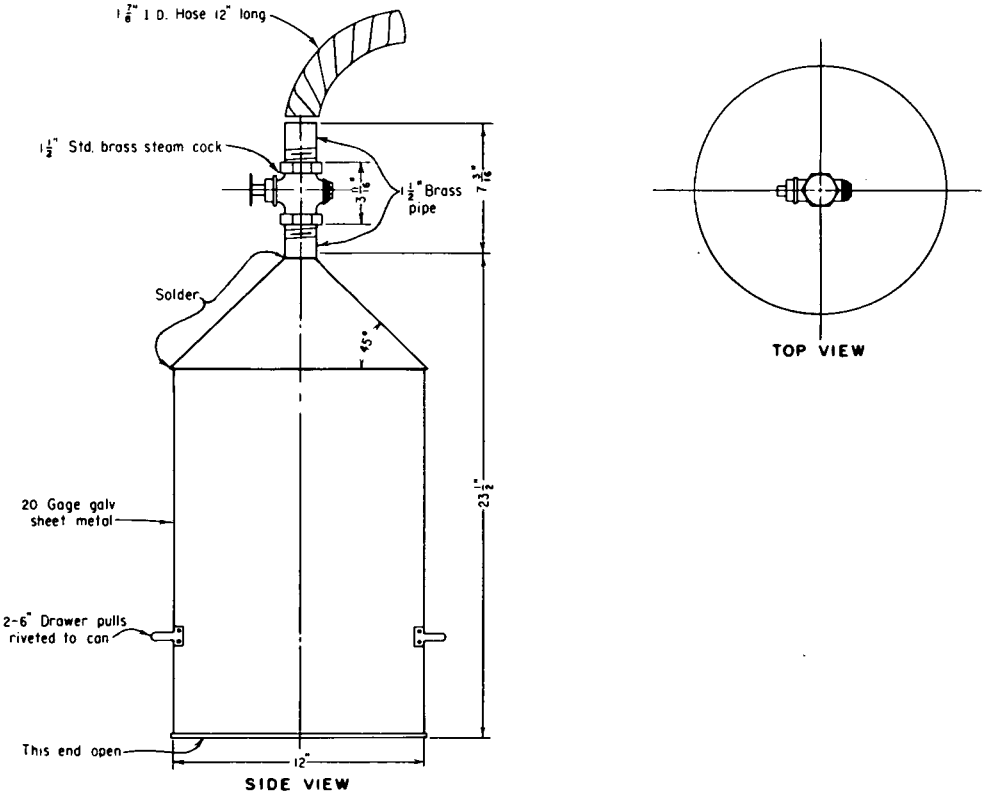

LARGE POURING CAN

Figure 2. – Sand pouring devices. 101-D-341

suitable containers for retaining the test sample and sand without moisture change; bags or other suitable containers for waste sand; cloth for collecting excess sand or soil; and assorted pans and porcelain dishes suitable for drying moisture content specimens.

8. Precautions

8.1 *Safety Precautions.*–This designation may involve hazardous materials, operations, and equipment, and may require handling heavy loads.

8.2 *Technical Precautions*:

8.2.1 Soils that may flow or deform during the test must be identified and appropriate precautions taken.

8.2.2 Movement of heavy equipment in the immediate test area should not be permitted during the volume determination.

8.2.3 Errors may arise in the computed unit weight of soil due to the influence of excessive moisture in the soil. These errors may be significant in soils having high permeability such as sands and gravels where the bottom of the test hole is close to or below the water table. Errors also may arise due to change in density of the calibrated sand as it becomes wetted from capillary or freestanding water while performing the test. This problem becomes evident when removing the calibrated sand from the test hole and wet sand is observed on the bottom or sides of the test hole. If a liner is used, the buoyant forces of free water beneath or behind the liner may adversely affect the volume determination.

8.2.4 The test area and equipment must be suitably protected during periods of inclement weather such as rain, snowfall, or high wind.

8.2.5 Numerous containers may be required during performance of this procedure. All containers must be properly labeled to avoid a possible mixup.

8.2.6 The total mass of the density sand and/or soil sample may exceed the capacity of the scale used, requiring cumulative determinations of mass. Care must be taken to ensure that the total mass is properly determined.

8.2.7 Pouring devices with valves provide consistent sand flow from test to test only if the valve is opened completely each time. A valve that is only partially open can significantly alter the flow characteristics of the device. Each individual pouring device has unique characteristics which may cause the sand to flow from it differently. The final calibration values are affected by changes in these flow characteristics. Consequently, calibration values are not interchangeable, even for devices which may appear to be identical.

8.2.8 Pouring devices must not be allowed to run out of sand during the pouring operation. The size of the stream of poured sand from the pouring device should be constant. If the reservoir capacity of the pouring device is too small to fill the test pit with one pour, use two or more pours to fill the test pit. Stop the stream of sand when the reservoir is about three-fourths empty and before the size of the stream diminishes. Refill the reservoir and resume pouring.

8.2.9. Pouring devices permit a varied sand drop distance that must be carefully controlled if consistent results are to be achieved. A distance of 2 inches from the end of the spout to the surface being poured is recommended. Variations in the drop distance can significantly affect results. The drop distance is directly affected by the operator's ability to control the pouring device and by the operator's judgment of the drop distance while doing so. This involves stooping while holding a pouring device with an initial mass of 50 lbm or more that is constantly changing in mass as the sand flows into the test pit. Calibration values are not interchangeable from device to device and are not necessarily interchangeable from operator to operator. Individual operators must demonstrate that they can duplicate the calibration values for a device before they may use them. Otherwise, separate calibrations for the various operators are required.

9. Calibration and Standardization

9.1 Verify that equipment is currently calibrated in accordance with the applicable calibration procedure. If the calibration is not current, perform the calibration before using the equipment for this procedure.

9.2 The sand pouring equipment and calibrated sand shall be calibrated in accordance with USBR 1436.

10. Procedure: Method A — In-Place Unit Weight of Total Material

10.1 All data are to be recorded on either the "In-Place Unit Weight Test Record" form as shown on figure 3, the "Rapid Method Test Record In-Place Unit Weight" form as shown on figure 4, or the "Relative Density Test Record" form as shown on figure 5.

10.2 Determine the recommended sample volume and select the appropriate template for the anticipated soil gradation in accordance with information in appendix X1. Assemble the remainder of the required equipment.

10.3 Determine to the nearest 0.01 lbm the mass of each combination of empty container, lid, and container liner (if used) that will contain the excavated soil. Number the containers and mark as to use. The mass may be written on the container or a separate prepared list.

10.4 Prepare the quantity of calibrated sand to be used.

10.4.1 Two sets of calibrated sand are necessary. Determining the volume of the test pit requires two separate sand pours (1) to measure the mass of sand used to fill the space between the soil surface and the top of the template, and (2) to measure the mass of sand used to fill the test pit up to the top of the template. The difference between the two is the mass of sand in the test pit.

10.4.2 Estimate the mass of calibrated sand and the number of containers required to fill the space between the soil surface and the top of the template. The estimated mass may be calculated by multiplying the template volume by the density of the calibrated sand. Number the containers

7-1425 (12-85)
Bureau of Reclamation

IN PLACE UNIT WEIGHT TEST RECORD

Designation USBR 7220-89

SAMPLE NO. Example	FEATURE.	PROJECT	
TEST NO.	SOURCE OF MATERIAL		
LOCATION	OFFSET	ELEV.	ZONE
TESTED BY / DATE	COMPUTED BY / DATE	CHECKED BY / DATE	

Cans 6,7,8,9,10,11,12

(1) Mass-Sand & Can(s), No(s). 50.00 lbm each . . . 350.00 lbm

(2) Mass-Sand Residue & Can(s) . . . 87.51 lbm

(3) Mass-Sand used, (1) - (2) . . . 262.49 lbm

(4) Mass-Sand in Template[a] & Cone, No. . . . 73.53 lbm

(5) Mass-Sand in Hole, (3) - (4) . . . 188.96 lbm

(6) Density of Calibrated Sand . . . 98.1 lbm/ft^3

(7) Vol. of Hole, $\frac{(5)}{(6)}$ . . . 1.9262 ft^3

(8) Mass-Wet Soil, Oversize & Can(s) . . . 307.74 lbm

(9) Mass-Can(s), No(s). 1,2,3 5.23,5.20,5.25 . . . 15.68 lbm

(10) Mass-Wet Soil & Oversize (8) - (9) . . . 292.06 lbm

(11) Wet Unit Weight Soil & Oversize $\frac{(10)}{(7)}$ . . . 151.6 lbf/ft^3

(12) Dry Unit Weight Soil & Oversize,

$\frac{(11)}{1 + [(28)/100]}$ . . . 140.6 lbf/ft^3

lbf/ft^3 x 0.1571 . . . 22.1 kN/m^3

(13) Mass-Wet Oversize[b] & Pan . . . 151.90 lbm

(14) Mass-Pan, No. 13 . . . 24.03 lbm

(15) Mass Wet Oversize[b] (13) - (14) . . . 127.87 lbm

(16) Mass-Oversize in Water . . . lbm

(17) Volume of Oversize[b] $\frac{(15) - (16)^*}{2.61 \times 62.4}$ . . . 0.7851 ft^3

(18) Sp. G. of Oversize[b] $\frac{(15)}{[(15) - (16)]}$ . . . 2.61 assumed

(19) Mass-Dry Oversize & Pan . . . 148.66 lbm

(20) Mass-Pan, No. 13 . . . 24.03 lbm

(21) Mass-Oven Dry Oversize (19) - (20) . . . 124.63 lbm

* Or $(17)_A$ by measuring the water displaced from a siphon can, then;

$(18)_A = \frac{(15)}{(17) \times 62.4}$

(22) Moisture Content, Oversize, w_{os}

$\frac{(15) - (21)}{(21)} \times 100$ . . . 2.6 %

(23) Mass-Wet Soil, (10) - (15) . . . 164.19 lbm

(24) Wet Unit Weight of Soil, $\frac{(23)}{(7) - (17)}$ . . . 143.9 lbf/ft^3

(25) Mass-Dry Soil, $\frac{(23)}{1 + (w_f/100)}$ . . . 146.34 lbm

(26) Mass-Dry Soil & Oversize (25) + (21) . . . 270.97 lbm

(27) Percentage of Oversize, $\frac{(21)}{(26)} \times 100$ . . . 46.0 %

(28) Moisture Content, Soil & Oversize, w

$\frac{(10) - (26)}{(26)} \times 100$ . . . 7.8 %

(29) Dry Unit Weight, Control Fraction

$\frac{(24)}{1 + (w_f/100)}$ . . . 128.3 lbf/ft^3

lbf/ft^3 x 0.1571 . . . 20.2 kN/m^3

Moisture Content Determination	CONTROL FRACTION
(1) Mass-Wet Soil & Dish	371.3 g
(2) Mass-Dry Soil & Dish	346.2 g
(3) Mass-Dish No. 23	140.2 g
(4) Mass-Water (1) - (2)	25.1 g
(5) Mass-Dry Soil (2) - (3)	206.0 g
(6) Moisture Content $\frac{(4)}{(5)} \times 100$	w_f 12.2 %

Soil Classification GC

REMARKS 5" max. size

AUXILIARY TESTS: USBR 1435 - __ ; 1436 - 89 ; 5300 - 89 ; 5320 - 89 ; 5505 - __

(a) Template Calibration USBR 7220
(1) Mass-Sand & Can(s) No. 4,5 . . . 100.00 lbm
(2) Mass-Sand Residue & Can(s) . . . 26.47 lbm
(3) Mass-Sand in Template (1) - (2) . . . 73.53 lbm

(b) Surface dried condition

GPO 850 - 647

Figure 3. - In-place unit weight test record — example.

7-2092A (12-86)
Bureau of Reclamation

RAPID METHOD TEST RECORD
IN-PLACE UNIT WEIGHT

Designation USBR 7240- _ _

PROJECT Example FEATURE USBR 7220-89 NO. ____ FILL ____ NO. ____

TESTED BY ____ DATE ____ COMPUTED BY ____ DATE ____ CHECKED BY ____ DATE ____

①

MO.	DAY	SHIFT A-DAY B-SWING C-GRAVE	TEST NO.	TYPE R=REG. C=CONG. D=DOUBT	STATUS A-ACC. R-REJ.	BORR. AREA NO.	STD. COMP. METHOD	SOIL CLASS	STATION	OFFSET	ELEV.

IN-PLACE UNIT WEIGHT DATA

Cans 6,7,8,9,10,11,12

(1) MASS-SAND & CAN NO. ____ 350.00 lbm
50.00 lbm each

(2) MASS-SAND RESIDUE & CAN 87.51 lbm

(3) MASS-SAND USED, (1)-(2) 262.49 lbm

(4) MASS-SAND IN TEMPLATE & CONE, NO. ____ 73.53 lbm
SEE BACK SIDE FOR FIELD DETERMINATION - USBR 7220

(5) MASS-SAND IN HOLE, (3)-(4) 188.96 lbm

(6) DENSITY OF CALIBRATED SAND 98.1 lbm/ft^3

(7) VOL. OF HOLE, $\frac{(5)}{(6)}$ 1.9262 ft^3

(8) TOTAL MASS WET MATERIAL & CAN 307.74 lbm

(9) MASS-CAN, NO. 1,2,3 15.68 lbm

② 5.23,5.20,5.25

(10) TOTAL MASS WET MATERIAL (8)-(9) 292.06 lbm

* (11) WET UNIT WEIGHT, TOTAL MATERIAL (10)/(7) 151.6 lbf/ft^3

(14) MASS-WET + NO. 4 127.87 lbm

(17) SP. G., + NO. 4 2.61

(21) MOISTURE CONTENT, + NO. 4 2.6 %

(24) FILL UNIT WEIGHT, WET 143.9 DRY 128.3 lbf/ft^3

(25) FILL MOISTURE CONTENT, w_f 12.2 %

(26) FIRST SPECIMEN UNIT WEIGHT, WET ____ DRY ____ lbf/ft^3

(27) MAX. UNIT WT. AT FILL MOISTURE CONTENT WET ____ DRY ____ lbf/ft^3

(28) OPT. MOISTURE CONTENT, w_o ____ %
$w_o = w_f + [z_m \times (1 + w_f/100)]$

(29) $w_o - w_f$ ____ %

(30) C VALUE $\frac{(24)}{(26)}$ ____ %

(31) D VALUE $\frac{(24)}{(27)}$ ____ %

④ COMMENTS - 18 SPACES AVAILABLE

GC - max. size 5"

③ RAPID METHOD CONTROL DATA

			FIRST SPECIMEN	SECOND SPECIMEN	
POINT NO.					
ADDED WATER (%)			0.0	+ 2.0	
MASS-MOLD & WET SOIL (lbm)					
MASS-MOLD (lbm) NO. ____					
MASS-WET SOIL (lbm)					
VOL. OF MOLD (ft^3)					
*WET UNIT WEIGHT (lbf/ft^3)			(26)		
CONVERTED UNIT WEIGHT (lbf/ft^3)					

Y_1/Y_2 CHART (ONE PERCENT)

PT. 1		PT. 1	
PT. 3		PT. 2	
Y_1(1-3)		Y_2(1-2)	
z_m		Y_m	
RLC		PT. 1	
$w_o - w_f = z_m$ + RLC	(29)	MAX. WET UNIT WT.	(27)

Y_2/Y_4 CHART (TWO PERCENT)

PT. B		PT. C	
PT. A		PT. A	
Y_2(B-A)		Y_4(C-A)	
x_m		Y_m	
$z_m = x_m$ + ADDED WATER @ PT. A			
RLC		PT. A	
$w_o - w_f = z_m$ + RLC	(29)	MAX. WET UNIT WT.	(27)

PLUS NO. 4 (OVERSIZE)

(12) MASS-WET + NO. 4 & PAN 151.90 lbm

(13) MASS-PAN, NO. 13, 24.03 lbm

(14) MASS-WET + NO. 4 (12)-(13) 127.87 lbm

(15) MASS + NO. 4 IN WATER ____ lbm

(16) VOL. OF + NO. 4 [(14)-(15)] /62.4x2.61 0.7851 ft^3

(17) SP. G OF + NO. 4 (14)/[(14)-(15)] 2.61 assumed

(18) MASS- DRY + NO. 4 & PAN 148.66 lbm

(19) MASS-PAN, NO. 13, 24.03 lbm

(20) MASS-DRY + NO. 4 (18)-(19) 124.63 lbm

(21) MOISTURE CONTENT + NO. 4 [(14)-(20)]/(20) x 100 2.6 %

(22) VOL. OF -NO. 4 (7)-(16) 1.1411 ft^3

(23) MASS-WET -NO. 4 (10)-(14) 164.19 lbm

*(24) WET UNIT WT. (23)/(22) 143.9 lbf/ft^3

*ASSUME 1 lbf = 1 lbm

FILL MOISTURE CONTENT

DISH NO.	23
MASS-WET SOIL + DISH	371.3 g
MASS-DRY SOIL + DISH	346.2 g
MASS-DISH	140.2 g
MASS-WATER	25.1 g
MASS-DRY SOIL	206.0 g
MOISTURE CONTENT (25)	12.2 %

AUXILIARY TESTS
USBR 5300 - 89

IN PLACE UNIT WEIGHT PERFORMED IN ACCORDANCE WITH USBR 7220 - 89

+ # 4 SPECIFIC GRAVITY PERFORMED IN ACCORDANCE WITH USBR 5320 - 89

( ) STORED

Figure 4. – Rapid method test record in-place unit weight — example.

USBR 7220 - FIELD DETERMINATION

MASS-SAND & CAN(S), NO. 4,5 ____100.00____ lbm

MASS-SAND RESIDUE & CAN(S) ____26.47____ lbm

MASS-SAND IN TEMPLATE ____73.53____ lbm (TRANSFER TO LINE (4) ON FRONT SIDE)

Figure 4. - Rapid method test record in-place unit weight (backside) — example — continued.

7-1709 (9-86)
Bureau of Reclamation

RELATIVE DENSITY TEST RECORD

Designation USBR 7220-89

PROJECT	FEATURE	FILL
Example		
TESTED BY / DATE	COMPUTED BY / DATE	CHECKED BY / DATE

MONTH	DAY	SHIFT 1/	TEST NO.	TYPE 2/	STATUS 3/	BORROW AREA CODE	STANDARD COMPACTION CODE	SOIL CLASSIFICATION	STATION	OFFSET	ELEV.

MAX. SIZE	OVERSIZE (%)	GRAVEL (%)	SAND (%)	FINES (%)	SpG OVERSIZE	MOISTURE OVERSIZE (%)	MOISTURE CONTROL FRACTION (%)	γ_{WET} TOTAL MATL	γ_{DRY} CONTROL FRACTION	$\gamma_{D_{MIN}}$	$\gamma_{D_{MAX}}$

A — IN-PLACE UNIT WEIGHT

(1)	Mass of sand & can(s) No(s). 6, 7, 8, 9, 10, 11, 12	350.00	lbm
(2)	Mass of sand residue & can(s)	87.51	lbm
(3)	Mass of sand used (1) - (2)	262.49	lbm
*(4)	Mass of sand in template/cone	73.53	lbm
(5)	Mass of sand in hole (3) - (4)	188.96	lbm
(6)	Density of calibrated sand	98.1	lbm/ft^3
(7)	Volume of hole (5)/(6)	1.9262	ft^3
(8)	Total mass of wet material and can(s)	307.74	lbm
(9)	Total mass of can(s) No(s). —, 1, 2, 3	15.68	lbm
(10)	Mass of wet material (8) - (9)	292.06	lbm
**(11)	Wet unit weight total material (10)/(7)	151.6	lbf/ft^3

OVERSIZE

(12)	Wet mass of oversize (surface dried condition)	127.87	lbm
(13)	Mass of oversize in water	78.88	lbm
(14)	Volume of oversize (12) - (13) / 62.4	0.7851	ft^3
(15)	SpG of oversize (12) / (12) - (13)	2.61	
(16)	Wet mass of control fraction (10) - (12)	164.19	lbm
**(17)	Wet unit weight, control fraction (16) / (7) - (14)	143.9	lbf/ft^3
(18)	Dry unit weight, control fraction (17) / 1 + [(w_f)/100]	128.3	lbf/ft^3

B — FILL MOISTURE CONTENT

		OVERSIZE	CONTROL FRACTION
(1)	Mass of pan & wet soil	151.90	371.3
(2)	Mass of pan & dry soil	148.66	346.2
(3)	Mass of pan No(s). 13, 23	24.03 lbm	140.2 g
(4)	Mass of water (1) - (2)	3.24	25.1
(5)	Mass of dry soil (2) - (3)	124.63	206.0
(6)	Moisture content [(4)/(5)] x 100	(w_{os}) 2.6 %	(w_f) 12.2 %

C — GRADATION

Maximum size —

(1)	Dry mass of oversize (12A) / 1 + [(w_{os})/100)]		lbm

MINUS 3-IN SPLIT SAMPLE

(2)	Mass of dry plus No. 4		lbm
(3)	Mass of dry minus No. 4		lbm
(4)	Mass of total split sample (2) + (3)		lbm
(5)	Mass of dry minus 3-in total sample (16A) / 1 + [(w_f)/100]		lbm
(6)	Total dry mass (1) + (5)		lbm
(7)	Percent oversize [(1)/(6)] x 100		%
(8)	Percent gravel [(2)/(4)] x [100 - (7)]		%
(9)	Percent plus No. 4 (7) + (8)		%
(10)	Percent minus No. 4 100 - (9)		%
(11)	Mass of dry minus No. 4 washed on No. 200		g
(12)	Mass of dry minus No. 4 retained on No. 200		g
(13)	Mass of dry minus NO. 4 passing No. 200 (11) - (12)		g
(14)	Percent fines, total sample [(13)/(11)] x (10)		%
(15)	Percent sand (10) - (14)		%

1/ A = day, B = swing, C = graveyard
2/ R = regular, C = congested, D = doubtful
3/ A = accepted, R = rejected

*Calibration value (USBR 1435) or field determination (USBR 7220)

Mass of template sand & can(s), No(s). 4, 5	100.00	lbm
Mass of template sand residue & can(s)	26.47	lbm
Mass of sand in template* (4)	73.53	lbm

**Implies 1 lbm = 1 lbf

Comments for PAYDIRT program (18 spaces available):

Testing observations: GC - 5" max. size

Stored ( )

GPO 852 - 182

Figure 5. - Relative density test record — example.

to be used and mark as to use. Fill the containers with sand. Determine and record (on a separate list) the mass of the containers and sand to the nearest 0.01 lbm.

10.4.3 From the anticipated volume of the test pit, estimate the mass of calibrated sand required to fill the test pit. Increase this amount by about 25 percent to ensure that a sufficient sand supply is available at the site, and then add to it the mass of sand calculated in subpargraph 10.4.2. The estimated mass to be used for the test pit may be calculated by multiplying the anticipated volume of the test pit by the density of the calibrated sand. Determine the number of containers required, number them, and mark as to use. Fill the containers with sand. Determine and record (on a separate list) the mass of the containers and sand to the nearest 0.01 lbm.

10.5 Select a representative area for the test, avoiding locations where removal of large particles would undermine the template.

10.6 Prepare the surface of the area to be tested.

10.6.1 Remove all loose soil from an area large enough on which to place the template. Prepare the exposed surface so that it is a firm, level plane.

10.6.2 Personnel should not step on the area selected for testing. A working platform should be provided when testing soils which may flow or deform.

10.7 Place and seat the template on the prepared surface.

10.7.1 Use a hammer to firmly seat the template to avoid movement of the template while the test is performed. The use of nails, weights, or other means may be necessary to maintain the position.

10.7.2 Remove any soil loosened while placing and seating the template; take care to avoid leaving any void space under the template. If necessary, voids under the template may be filled using plastic soil, modeling clay, or other suitable material, provided that these materials are not subsequently excavated as part of the soil removed from the test pit.

10.8 Determine the mass of sand used to fill the space between the soil surface and the top of the template.

10.8.1 Irregularities of the soil surface within the template must be taken into account. To do this, the mass of sand required to fill the space between the soil surface and the top of the template must be determined.

10.8.2 It is recommended that a cloth, with a hole slightly larger than the template center hole, be placed over the template to facilitate locating and collecting any excess sand and/or loose soil.

10.8.3 Place a plastic liner (approximately 1/2 mil thick) over the template and shape it by hand to conform to the irregular soil surface and the template. The liner should extend about 1 foot outside the template. The liner should not be stretched too taut or contain excessive folds or wrinkles (see fig. 6).

10.8.4 Pour the calibrated sand onto the plastic liner inside the template using a sand pouring device (see fig. 7). Slightly overfill the template (see subpars. 8.2.7 through 8.2.9). Return any sand remaining in the pouring device to the original container.

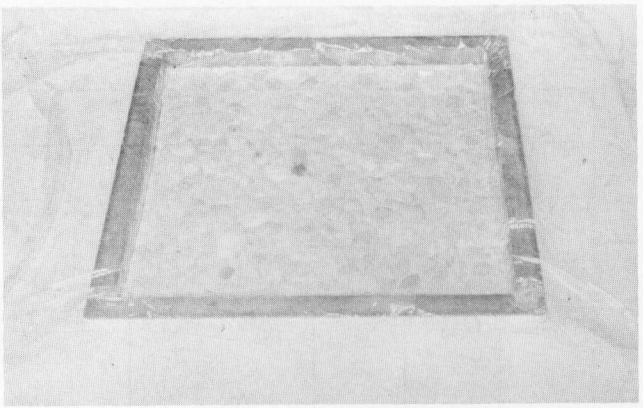

Figure 6. – Plastic liner placed over the template.

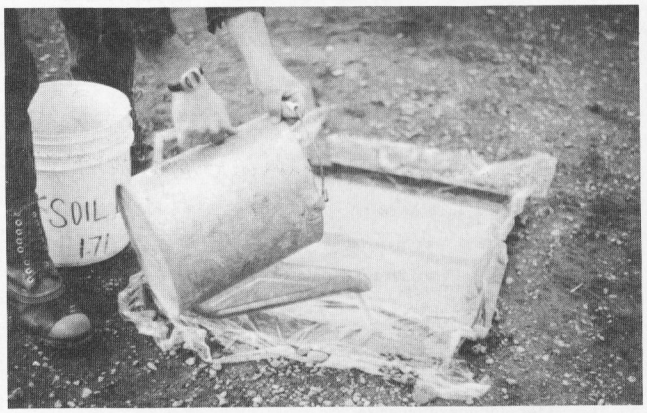

Figure 7. – Sand being poured into the template.

10.8.5 Carefully level the calibrated sand by screeding with the steel straightedge across the top edges of the template. Return all screeded excess sand to the original container. Care must be taken to avoid the loss of any excess sand.

10.8.6 Remove the calibrated sand in the template and, if the sand is to be reclaimed, place it in a specially marked container. Remove the plastic liner.

10.9 Excavate the test pit.

10.9.1 Using handtools (chisel, knife, bar, etc.), excavate the center portion of the test pit.

10.9.1.1 Movement of heavy equipment in the area of the test pit should not be permitted if deformation of the soil within the test pit may occur.

10.9.2 Place all soil removed from the test pit in the container(s) (see fig. 8); be careful to avoid losing any soil (see subpar. 10.8.2).

10.9.3 Avoid soil moisture loss by keeping the container covered while soil is not being placed in it. A sealable plastic bag may be used inside the container to hold the soil.

10.9.4 Carefully trim the sides of the excavation so the dimensions of the test pit at the soil-template contact are as close as possible to that of the template hole. Avoid

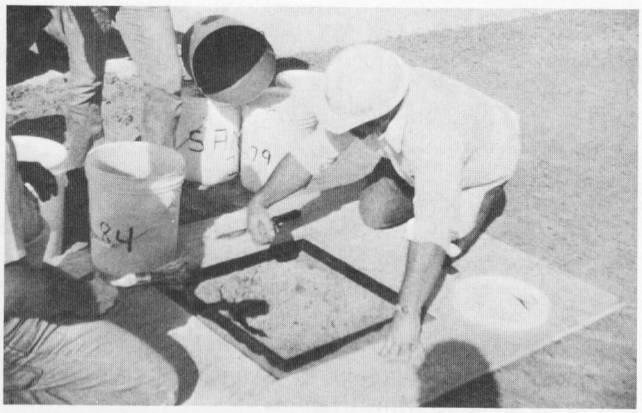

Figure 8. – Excavation of the test pit.

disturbing the template or the soil beneath or outside the template.

10.9.5 Continue the excavation to the required depth; carefully remove any material that has been compacted or loosened in the process.

10.9.5.1 If–during excavation of soil from within the test pit–a particle (or particles) is found that is about 1-1/2 times or more larger than the maximum particle size used to establish the dimensions and minimum volume of the test pit (see app. XI), set the particle(s) aside and mark appropriately. The mass and volume of the particle(s) must be determined and then subtracted from the mass and volume of the material removed from the test pit. Consider the larger particle(s) as "oversize" and follow the procedure outlined in paragraph 11 except that the "total" unit weight, which would include the larger particle(s), need not be calculated. The "control fraction" values determined then become the values for the total material from the test pit.

If enough of these particles are found so that their mass is determined to be 5 percent or more of the mass of the excavated soil, the test should be repeated with a larger test pit in accordance with the guidelines in appendix XI.

10.9.6 The sides of the pit should slope inward slightly. Soils that do not exhibit much cohesion may require a more conical-shaped excavation.

10.9.7 The profile of the finished pit must be such that poured sand will completely fill the excavation. The sides of the test pit should be as smooth as possible and free of pockets or overhangs or anything that might interfere with the free flow of the sand.

10.9.8 The bottom of the test pit must be cleaned of all loosened soil.

10.10 Determine the volume of the test pit.

NOTE 2.–A plastic liner may be required to prevent migration of the calibrated sand into the natural voids of the soil mass. The liner, about 1/2-mil thick, should be large enough to extend about 1 foot outside of the template after having been carefully placed and shaped to the soil surface within the pit. Allowances must be made for slack. The liner should not be stretched too taut nor contain excessive folds or wrinkles. Inspect the liner for punctures before use.

10.10.1 Pour the calibrated sand using the sand pouring device. Use the same pouring technique as used in the calibration procedure (USBR 1436). Slightly overfill the template. Return any sand remaining in the pouring device to the original container.

10.10.1.1 While the sand is being poured, any vibrations in the test area must be avoided. The movement of heavy equipment in the test area should not be permitted. Vibration during the volume determination may increase the density of the poured sand and decrease the accuracy of the test.

10.10.2 Carefully level the calibrated sand by screeding with the steel straightedge across the top edges of the template. Return all screeded excess sand to the original container. Care must be taken to avoid the loss of any excess sand.

10.10.3 If the calibrated sand is to be reclaimed, remove the used sand and place it into a specially marked container.

10.10.4 Remove the liner and template.

10.11 Determine the dry unit weight.

10.11.1 Determine the mass of calibrated sand in the template (sand used to fill the space between the soil surface and the top of the template) as follows:

10.11.1.1 Calculate and record to the nearest 0.01 lbm the total mass of the sand and containers prepared in subparagraph 10.4.2. Record the container numbers.

10.11.1.2 Determine and record to the nearest 0.01 lbm the total mass of the empty containers plus the sand residue (sand not used) and containers.

10.11.1.3 Calculate and record to the nearest 0.01 lbm the mass of sand in the template.

10.11.2 Determine the mass of calibrated sand in the test pit and template (sand used to fill the test pit to the top of the template) as follows:

10.11.2.1 Calculate and record to the nearest 0.01 lbm the total mass of the sand and containers prepared in subparagraph 10.4.3. Record the container numbers.

10.11.2.2 Determine and record to the nearest 0.01 lbm the total mass of the empty containers plus the sand residue and containers.

10.11.2.3 Calculate and record to the nearest 0.01 lbm the mass of sand in the test pit and template (mass of sand used).

10.11.3 Calculate and record to the nearest 0.01 lbm the mass of the calibrated sand used to fill the test pit.

10.11.4 Record to the nearest 0.1 lbm/ft^3 the density of the calibrated sand (determined in calibration procedure–USBR 1436).

10.11.5 Calculate and record to the nearest 0.0001 ft^3 the volume of the test pit.

10.11.6 Determine to the nearest 0.01 lbm the total mass of the excavated soil and containers.

10.11.7 Calculate and record to the nearest 0.01 lbm the total mass of the containers used to hold the excavated soil. Record the container numbers.

10.11.8 Calculate and record to the nearest 0.01 lbm the mass of the excavated soil.

10.11.9 Calculate the wet density of the excavated soil to the nearest 0.1 lbm/ft³.

10.11.9.1 Convert wet density to wet unit weight by changing lbm/ft³ to lbf/ft³ (Assume 1 lbf = 1 lbm.) and record to the nearest 0.1 lbf/ft³.

10.11.10 If the excavated soil contains oversize [normally larger than the No. 4 (4.75-mm) sieve for cohesive soils and 3-inch (75-mm) sieve for cohesionless soils], separate the material using the appropriate size sieve. If the soil contains 3 percent (wet basis) or more oversize method B must be used.

10.11.11 If 3 percent or less oversize is present, obtain a moisture content specimen representative of the excavated soil and determine the moisture content in accordance with USBR 5300 and record.

NOTE 3.–For rapid moisture content determination of soils containing less than 15-percent fines [minus No. 200 (75 μm)], a suitable source of heat such as an electric or gas hotplate may be used. If a source of heat other than the controlled temperature oven is used, stir the sample to accelerate drying and avoid localized overheating. The soil may be considered dry when further heating causes, or would cause, less than 0.1 percent additional loss of mass.

10.11.12 Calculate and record to the nearest 0.1 lbf/ft³ the dry unit weight of the soil. If required, convert and record the dry unit weight to the nearest 0.02 kN/m³ for SI units.

11. Procedure: Method B — In-Place Unit Weight of Control Fraction

11.1 All data are to be recorded on the "In-Place Unit Weight Test Record" form (fig. 3), the "Rapid Method Test Record In-Place Unit Weight" form (fig. 4), or the "Relative Density Test Record" form (fig. 5).

11.2 Obtain the in-place wet unit weight of total material by following the procedure for method A as stated in paragraph 10.

11.3 To obtain the wet unit weight of the control fraction, the mass and volume of the oversize are determined and subtracted from the total mass and total volume to obtain the mass and volume of the control fraction. The unit weight of the control fraction can be calculated from the mass and volume of the control fraction.

11.3.1 Normally, the wet unit weight of the control fraction is determined and the dry unit weight calculated using the moisture content of the control fraction.

11.3.2 In addition, the moisture content of the oversize, the moisture content of the total material, and the percentage of oversize are determined.

11.4 After obtaining the wet mass of total soil removed from the test pit, separate the soil into the control fraction and the oversize using the designated sieve. This should be done rapidly to minimize loss of moisture. If the test is for construction control, place the control fraction in an airtight container for further tests.

11.5 Wash the oversize using a minimum of water and blot to a wet, surface-dry condition.

11.6 Determine the wet mass of the oversize plus container of predetermined mass and record to the nearest 0.01 lbm.

11.7 Calculate the wet mass of the oversize and record to the nearest 0.01 lbm.

11.8 Calculate the wet mass of the control fraction and record to the nearest 0.01 lbm.

11.9 Determine the volume of the oversize material to the nearest 0.0001 ft³ by one of the following methods:

11.9.1 Determine and record to the nearest 0.01 lbm the mass of all oversize suspended in water using the methods and principles of method C in USBR 5320 except that the 24-hour soaking period is not used. Calculate and record the volume of the oversize.

11.9.1.1 Calculate the bulk specific gravity of the oversize and record to the nearest 0.01.

NOTE 4.–For this designation the bulk specific gravity is determined on a wet surface-dry basis (see subpar. 11.5). This is not the same as bulk specific gravity (saturated surface dry) although the bulk specific gravity (saturated surface dry) may be used instead. However, do not use a bulk specific gravity (oven dry) value for this designation. Refer to USBR 5320 for definitions and explanations of these terms.

11.9.2 Determine and record the volume of all oversize (equal to the volume of displaced water) in accordance with the methods and principles of method B in USBR 5320 except that the 24-hour soaking period may be waived.

11.9.2.1 Calculate the bulk specific gravity (see note 4) of the oversize in accordance with USBR 5320 and record to the nearest 0.01.

11.9.3 Calculate the volume of the oversize using a known bulk specific gravity value (see note 4). If previous tests for bulk specific gravity of similar oversize material from a particular source have been performed in accordance with subparagraph 11.9.1 or 11.9.2 and the value is relatively constant, a bulk specific gravity may be assumed. Record the bulk specific gravity to the nearest 0.01 and note that it is *assumed.*

11.10 Calculate the volume of the control fraction and record to the nearest 0.0001 ft³.

11.11 Calculate the wet density of the control fraction to the nearest 0.1 lbm/ft³.

11.11.1 Convert wet density to wet unit weight by changing lbm/ft³ to lbf/ft³ (Assume 1 lbf = 1 lbm.) and record to the nearest 0.1 lbf/ft³.

11.12 Determine and record the moisture content of the control fraction in accordance with USBR 5300.

11.13 Calculate and record to the nearest 0.1 lbf/ft³ the dry unit weight of the control fraction. If required, convert and record the dry unit weight to the nearest 0.02 kN/m³ for SI units.

11.14 Determine and record the moisture content of all oversize in accordance with USBR 5300. If previous tests for moisture content of the oversize from a particular source have been performed and the value is relatively constant, a moisture content may be assumed.

11.15 Determine the percentage of oversize.

11.15.1 Calculate the dry mass of the control fraction and record to the nearest 0.01 lbm.

11.15.2 Calculate the dry mass of the oversize and record to the nearest 0.01 lbm.

11.15.3 Calculate the dry mass of the total sample and record to the nearest 0.01 lbm.

11.15.4 Calculate the percentage of oversize and record to the nearest 0.1 percent.

11.16 Calculate the moisture content of the total material and record to the nearest 0.1 percent.

11.17 Calculate and record to the nearest 0.1 lbf/ft³ the dry unit weight of the total material. If required, convert and record the dry unit weight to the nearest 0.02 kN/m³ for SI units.

12. Calculations — Method A

12.1 The following symbols are used in calculations for method A of this designation.

m_1 = mass of sand and container(s) (before test), lbm
m_{c1} = mass of template sand and container(s) (before test), lbm
m_2 = mass of sand residue and container(s) (after test), lbm
m_{c2} = mass of template sand residue and container(s) (after test), lbm
m_3 = mass of sand used, lbm
m_4 = mass of sand in template, lbm
m_5 = mass of sand in test pit, lbm
m_8 = mass of wet material removed from test pit plus mass of container(s), lbm
m_9 = mass of container(s) for m_8, lbm
m_{10} = mass of wet material removed from test pit, lbm
V_t = volume of test pit, ft³
ρ_s = density of calibrated sand, lbm/ft³
ρ_{wet} = wet density of soil from test pit, lbm/ft³
γ_{wet} = wet unit weight of soil from test pit, lbf/ft³
γ_d = dry unit weight of soil from test pit, lbf/ft³ or kN/m³
w = moisture content of soil from test pit, %

12.2 Calculate the mass of the sand contained in the template.

$$m_4 = m_{c1} - m_{c2} \quad (1)$$

12.3 Calculate the mass of the sand used to fill the test pit and template.

$$m_3 = m_1 - m_2 \quad (2)$$

12.4 Calculate the mass of the sand used to fill the test pit.

$$m_5 = m_3 - m_4 \quad (3)$$

12.5 Calculate the volume of the test pit.

$$V_t = \frac{m_5}{\rho_s} \quad (4)$$

12.6 Calculate the mass of wet material removed from the test pit.

$$m_{10} = m_8 - m_9 \quad (5)$$

12.7 Calculate the wet density of the material removed from test pit.

$$\rho_{wet} = \frac{m_{10}}{V_t} \quad (6)$$

12.7.1 In the procedure, wet density is converted to wet unit weight by changing lbm/ft³ to lbf/ft³. (Assume 1 lbm = 1 lbf.)

12.8 Calculate the dry unit weight of the material removed from the test pit.

$$\gamma_d = \frac{\gamma_{wet}}{1 + \left(\frac{w}{100}\right)} \quad (7)$$

where 100 converts from percent to decimal.

12.8.1 Convert dry unit weight in inch-pound units to SI units if required.

$$\text{Unit weight, kN/m}^3 = \frac{0.1571 \text{ kN/m}^3}{\text{lbf/ft}^3} \times (\text{unit weight, lbf/ft}^3)$$

13. Calculations — Method B

13.1 In addition to the symbols used in method A (par. 12), the following symbols are used in calculations for method B of this designation:

m_{13} = wet mass of oversize and container, lbm
m_{14} = mass of container, lbm
m_{15} = wet mass of oversize, lbm
m_{16} = mass of oversize suspended in water, lbm
m_{19} = dry mass of oversize and container, lbm
m_{20} = mass of container, lbm
m_{21} = dry mass of oversize, lbm
m_{23} = wet mass of control fraction, lbm
m_{25} = dry mass of control fraction, lbm
m_{26} = dry mass of total sample (control fraction plus oversize), lbm
V_{os} = volume of oversize, ft³
V_c = volume of control fraction, ft³
ρ_{wet} (c) = wet density of control fraction, lbm/ft³
γ_{wet} (c) = wet unit weight of control fraction, lbf/ft³
γ_d (c) = dry unit weight of control fraction, lbf/ft³ or kN/m³
γ_d = dry unit weight of total material, lbf/ft³ or kN/m³
G_m = bulk specific gravity of oversize
w = moisture content of excavated soil, %
w_f = moisture content of control fraction, %

w_{os} = moisture content of oversize, %

13.2 Calculate the wet mass of the oversize.

$$m_{15} = m_{13} - m_{14} \quad (8)$$

13.3 Calculate the wet mass of the control fraction.

$$m_{23} = m_{10} - m_{15} \quad (9)$$

13.4 Calculate the volume of the oversize based on the mass in air and mass in water method.

$$V_{os} = \frac{m_{15} - m_{16}}{62.4} \quad (10)$$

where 62.4 equals density of water, lbm/ft³.

13.5 Calculate the bulk specific gravity of the oversize.

$$G_m = \frac{m_{15}}{m_{15} - m_{16}} \quad (11)$$

13.6 Calculate the volume of the oversize based on a known bulk specific gravity.

$$V_{os} = \frac{m_{15}}{62.4\ G_m} \quad (12)$$

13.7 Calculate the volume of the control fraction.

$$V_c = V_t - V_{os} \quad (13)$$

13.8 Calculate the wet density of the control fraction.

$$\rho_{wet}\,(c) = \frac{m_{23}}{V_c} \quad (14)$$

13.8.1 In the procedure, wet density is converted to wet unit weight by changing lbm/ft³ to lbf/ft³. (Assume 1 lbm = 1 lbf.)

13.9 Calculate the dry unit weight of the control fraction.

$$\gamma_d\,(c) = \frac{\gamma_{wet}\,(c)}{1 + \left(\frac{w_f}{100}\right)} \quad (15)$$

where 100 converts from percent to decimal.

13.9.1 Convert dry unit weight in inch-pound units to SI units if required.

$$\text{Unit weight, kN/m}^3 = \frac{0.1571\ \text{kN/m}^3}{\text{lbf/ft}^3} \times (\text{unit weight, lbf/ft}^3)$$

13.10 Calculate the dry mass of the control fraction.

$$m_{25} = \frac{m_{23}}{1 + \left(\frac{w_f}{100}\right)} \quad (16)$$

where 100 converts from percent to decimal.

13.11 Calculate the dry mass of the oversize using one of the following equations as appropriate:

$$m_{21} = m_{19} - m_{20} \quad (17)$$

or

$$m_{21} = \frac{m_{15}}{1 + \left(\frac{w_{os}}{100}\right)} \quad (18)$$

where 100 converts from percent to decimal.

13.12 Calculate the dry mass of the total sample.

$$m_{26} = m_{25} + m_{21} \quad (19)$$

13.13 Calculate the percent oversize.

$$\text{Percent oversize} = 100\left(\frac{m_{21}}{m_{26}}\right) \quad (20)$$

where 100 converts from decimal to percent.

13.14 Calculate the moisture content of the total material.

$$w = 100\left(\frac{m_{10} - m_{26}}{m_{26}}\right) \quad (21)$$

where 100 converts from decimal to percent.

13.15 Calculate the dry unit weight of the total material.

$$\gamma_d = \frac{\gamma_{wet}}{1 + \left(\frac{w}{100}\right)} \quad (22)$$

where 100 converts from percent to decimal.

13.15.1 Convert dry unit weight in inch-pound units to SI units if required.

$$\text{Unit weight, kN/m}^3 = \frac{0.1571\ \text{kN/m}^3}{\text{lbf/ft}^3} \times (\text{unit weight, lbf/ft}^3)$$

14. Report

14.1 The report is to consist of the completed and checked forms (as applicable):

"In place Unit Weight Test Record" (fig.3).

"Rapid Method Test Record In-Place Unit Weight" (fig. 4).

"Relative Density Test Record" (fig. 5).

14.2 All calculations are to show a checkmark.

APPENDIX

X1. GUIDELINES FOR TEST HOLE OR TEST DIMENSIONS AND SELECTION OF EQUIPMENT

X1.1 Guidelines

X1.1.1 Guidelines for selecting the appropriate sand-cone diameter and the minimum test hole volume are given in USBR 7205 and are shown in table X1.1 for reference.

Table X1.1. – Recommended guidelines for selection of cone diameter and minimum test hole volume (from USBR 7205).

Cone diameter in	Minimum test hole volume ft³	Test hole depth in	Significant particle size in
8	*0.25	12	3/4
12	0.50	14	1-1/2

* Minimum volume for embankment dams. See USBR 7205 for explanation of hole dimensions and significant particle size.

X1.1.2 For test pits, the guidelines for selecting the size of the equipment and the excavation dimensions to obtain the minimum volume of soil required are shown in table X1.2. These guidelines are based on providing a representative sample of the soil being tested and on practical working conditions.

Table X1.2. – Recommended guidelines for selection of test apparatus and minimum excavation volume (cohesive soils and certain cohesionless soils).

Maximum particle size in	Minimum required volume ft³	Apparatus and template opening	Required minimum depth* in
3	1.0	20-in sand cone	12
		24-in-square frame	18
5	2	30-in-square frame	12
8	8	4-ft-diameter ring	24
12	27	6-ft-diameter ring	24
18	90	9-ft-diameter ring	36
More than 18	Should be determined on a case-by-case basis		

* This depth must be attained so that the minimum required volume of material is obtained. See discussion in "Minimum Volume of Test" for explanation of shape and dimensions of test pit.

X1.1.3 The guidelines shown in table X1.2 are for cohesive soils and for cohesionless soils whose gradation and particle angularity will allow vertical or near-vertical side walls to be excavated.

X1.1.4 For some cohesionless soils with relatively uniform gradation, the slope of the side walls will be much flatter, approximating the angle of repose of the soil. For these materials, the "worst case" is assumed with a conically shaped excavation resulting. Table X1.3 gives guidelines for the equipment, the approximate dimensions of the excavation, and the minimum volumes that would result.

X1.2 Required Excavation Volume

X1.2.1 The minimum excavation volumes shown in tables X1.2 and X1.3 are required to provide a representative sample of the soil being tested.

X1.2.3 For this designation, a representative sample is based on the mass required to provide a gradation analysis of the soil within certain limits of accuracy.

X1.2.4 For soils having a maximum particle size of 3 inches (75 mm), the required mass (and volume) is based on a sample 100 times the mass of the maximum particle size. This results in gradation percentages with an accuracy of ±1.0 percent.

X1.2.5 For soils having a maximum particle size larger than 3 inches, the required mass is based on a sample 40 times the mass of the maximum particle size. This results in gradation percentages with an accuracy of ±2.5 percent.

X1.3 Type and Size of Equipment

X1.3.1 The basic types of apparatus used to determine in-place unit weight are the sand-cone device, the square metal frame, and the metal ring. Each type is practical only for specific excavation sizes.

X1.3.2 The sand-cone device is practical only up to about a 20-inch test hole diameter because of the physical difficulty in handling anything larger. The square frame is practical from about 20 inches square to about 36 inches square. Square frames are easier to fabricate than circular templates. Rings are preferred as templates for excavating test pits about 3 feet in diameter and larger because square frames need to be stiffened and can be heavier and more awkward to handle than circular templates. In addition, it is difficult to trim the excavation having corners because of the larger particle sizes,present in the soil when a square frame larger than 33 inches is required. The plastic liner for the sand replacement method should be about 1/2-mil thick while the liner for the water replacement method should be about 4 to 6 mils thick. Bunching of a plastic liner 4 to 6 mils thick in the corners of a square frame may result in errors in the volume measurement.

X1.3.3 The apparatus and template sizes (shown in tables X1.2 and X1.3) were selected to provide a volume about equal to the required volume. Where there was a choice between methods, the order of preference was sand cone, square frame, and then the ring. Other sizes may be used (e.g., 27-inch-square frame) as long as the minimum volume of excavated soil can be obtained.

X1.4 Minimum Volume of Test

X1.4.1 In table X1.2, the minimum volume obtained from excavating a test pit using the template shown and the required minimum depth is based on the following assumptions:

a. The soil being excavated contains a significant amount of the maximum particle size material.

b. No matter whether the template is square or round, the excavation will be basically circular in plan view

Table X1.3. – Recommended guidelines for test equipment for cohesionless soils "worst case."

Maximum particle size in	Minimum required volume ft³	Apparatus and template opening	Minimum required depth* in	Approximate diameter of excavated hole in
3/4	0.25	20-in sand cone**	6	19
1-1/2	0.5	24-in-square frame	7	22
3	1.0	33-in-square frame	10	30
5	2	40-in-diameter ring	12	35
8	8	62-in-diameter ring	18	54
More than 8	Should be determined on a case-by-case basis			

* This depth must be attained so that the minimum required volume of material is obtained. See discussion in "Minimum Volume of Test" for explanation of shape and dimensions of test pits.

** For "pea gravel" (No. 4 to 3/4-inch), USBR 7215 (sleeve method) may be used.

because the presence of the maximum particle size will probably prevent excavating corners.

c. The side walls will be sloped. Encountering the maximum particle in the side wall while excavating will require reducing the excavation diameter. For a maximum particle size of 3 inches, most soils can be excavated to a slope of 1 horizontal to 3 vertical or steeper; while for the 5- and 8-inch maximum particle sizes, the side walls can be excavated to a slope of 1 horizontal to 2 vertical or steeper.

d. The diameter of the excavation will be smaller than the template opening because a large particle may be just beneath the template. To prevent an overhang in the excavation, these particles should not be removed unless they are protruding into the excavation more than about two-thirds of their diameter.

e. For excavation of soils having maximum particle size up to 8 inches, the volume of the excavation is assumed to be a frustrum of a cone as shown on figure X1.1. The diameter of the excavation is assumed to be the template diameter minus the maximum particle size.

f. For excavation of soils having maximum particle sizes of 12 inches and larger, the volume of the excavation is assumed to be a spherical segment. The diameter of the excavation is assumed to be the template diameter minus two-thirds of the maximum particle size.

X1.4.2 In table X1.3, the minimum volume is assumed to be conical as shown on figure X1.1, with the depth of the excavation equal to about one-third of the hole diameter. For cohesionless soils–with relatively uniform gradation–the "worst case" is assumed where the slope of the side walls could not exceed the angle of repose of the soil.

X1.4.3 Based on these assumptions, the minimum volume of excavations shown in tables X1.2 and X1.3 is conservative. Steeper side walls or larger test hole diameters will result in larger volumes. In some cases, smaller apparatus than that indicated in tables X1.2 and X1.3 may be used if a trial test pit is excavated and it can be shown that the smaller apparatus can provide the minimum required volume. However:

- The depth of excavation should never be less than one-third of the hole diameter.
- The volume of the excavation must be 50 times larger than the volume of the maximum particle size.
- The hole diameter must be at least four times larger than the maximum particle diameter.

X1.5 Replacement Medium

X1.5.1 For the templates shown in tables X1.2 and X1.3, sand replacement using a sand-pouring device is felt to be practical for the square frames up to 33 inches, and water replacement for 40-inch and larger diameter rings.

X1.5.2 If other sizes are used, the sand replacement method is probably practical up through 36-inch-square frames, while water replacement is more practical for 36-inch-diameter rings and larger. A 36-inch opening is about the size limit where sand can be poured into the excavation uniformly and consistently while standing outside the template.

X1.6 Depth of Excavation

X1.6.1 For soils having a maximum particle size of 5 inches or less, the depth of excavation in table X1.2 is shown in 6-inch increments since cohesive soils are normally compacted in layers of 6 inches maximum thickness. The minimum depth is 12 inches so that at least two compaction lifts are included in the determination. If the in-place unit weight determination is for in-place soils, the minimum depth shown is that required to obtain the minimum volume. Greater depths—not necessarily in 6-inch increments—may be used.

X1.6.2 Shallower depths may be used for in-place soils but only if the diameter of the excavation is larger so that the minimum volume of soil is obtained. This may be necessary to test deposits of material of limited thickness.

X1.6.3 For the soils in table X1.2 having maximum particle sizes of 8 and 12 inches, the desired minimum excavation depth is shown as 24 inches since these soils would normally be placed in 12-inch lifts. For soils having an 18-inch maximum particle size, a 36-inch minimum depth is necessary to obtain the required volume.

X1.6.4 In table X1.3, the minimum depths of excavation are equal to about one-third of the hole diameter as discussed previously. The elevation of the top of the excavation should be such that the test will be representative of the lift being tested.

TYPICAL FOR:

20 inch Sand cone

24 and 30 inch Square frame

4 ft. Diameter ring

$$Vol = \frac{d}{3}(B + C + \sqrt{BC})$$

B = Area of top $= \frac{\pi}{4} D_T^2$

C = Area of bottom $= \frac{\pi}{4} D_B^2$

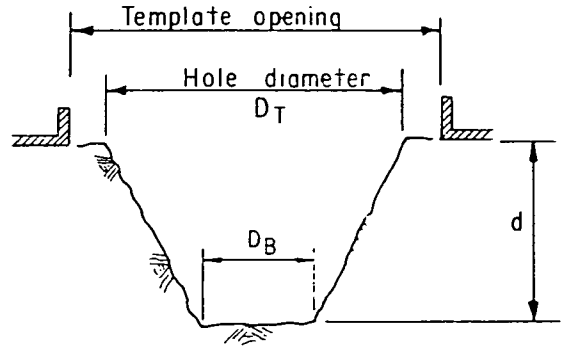

TYPICAL FOR:

6 ft. and 9 ft. Diameter ring

$$Vol = \frac{\pi}{24} d\,(3D^2 + 4d^2)$$

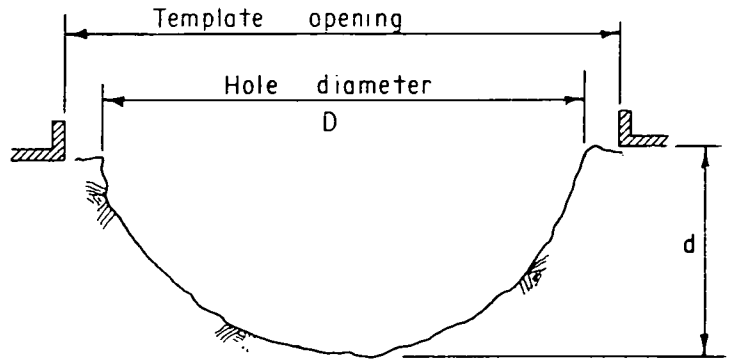

TYPICAL FOR:

Cohesionless Soils

"worst case"

$$Vol = \frac{\pi}{12} D^2 d$$

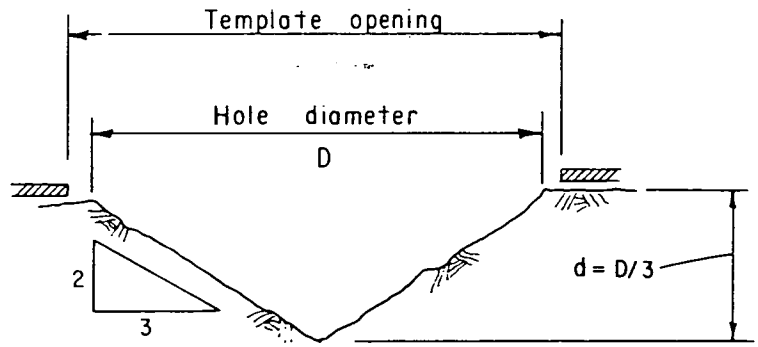

Figure X1.1. – Test pit configurations.

UNITED STATES DEPARTMENT OF THE INTERIOR
BUREAU OF RECLAMATION

USBR 7221-89

PROCEDURE FOR

DETERMINING UNIT WEIGHT OF SOILS IN-PLACE BY THE WATER REPLACEMENT METHOD IN A TEST PIT

INTRODUCTION

This procedure is under the jurisdiction of the Geotechnical Services Branch, code D-3760, Research and Laboratory Services Division, Denver Office, Denver, Colorado. The procedure is issued under the fixed designation USBR 7221. The number immediately following the designation indicates the year of acceptance or the year of last revision.

1. Scope

1.1 This designation outlines a procedure for determining the in-place unit weight of soils using water to fill a test pit lined with plastic sheeting to determine the volume of the test pit.

1.2 This procedure is applicable to determine the volume of test pits between approximately 3 and 100 ft^3. Generally, the soils tested have maximum particle sizes over 5 inches. This procedure may be used for larger sized excavations if desirable.

1.2.1 Usually, this procedure is performed using a circular metal template with an inside diameter of 3 feet or more. Other shapes or materials may be used providing they meet the requirements of this designation and the guidelines given in appendix X1 for the minimum volume of the test pit.

1.2.2 USBR 7220 may be used as an alternative method. However, its use is usually only practical for volume determination of test pits between approximately 1-1/2 and 6 ft^3.

1.2.3 USBR 7205 and/or USBR 7206 are usually used to determine the volume of test holes smaller than 1-1/2 ft^3.

1.3 Two methods are provided.

1.3.1 Method A — In-place unit weight of total material.

1.3.2 Method B — In-place unit weight of control fraction.

1.3.2.1 If the in-place soil contains particles larger than the maximum particle size permitted in the laboratory unit weight test(s), the soil is considered to consist of two fractions, or portions. The soil from the in-place unit weight test is physically divided into a control fraction and an oversize fraction based on a designated sieve size. The unit weight of the control fraction is calculated and compared with the unit weight(s) established by the standard laboratory test(s).

1.3.2.2 Normally, the control fraction is the minus U.S.A. Standard series No. 4 (4.75-mm) sieve size material for cohesive soils and the minus 3-inch (75-mm) sieve size material for cohesionless soils.

1.3.3 Method A is used when the in-place unit weight of total material is to be determined regardless of particle sizes.

1.3.4 Method B is used when percent compaction (USBR 7255) or percent relative density (USBR 7250) is to be determined.

1.4 Any soil or other material can be tested, provided the soil or other material being tested has sufficient cohesion or particle attraction to maintain stable sides during excavation of the test pit and through completion of this test. It also should be firm enough not to deform or slough due to the minor pressures exerted in digging the hole and filling with water.

1.5 This procedure is limited generally to soil in an unsaturated condition and is not recommended for soils that are soft or friable (crumble easily). The accuracy of the test may be affected for soils that deform easily or that may undergo volume change in the excavated hole from standing or walking near the hole during the test.

2. Auxiliary Tests

2.1 The moisture content of the soil must be determined in accordance with USBR 5300 in order to calculate dry unit weight values. In order to calculate the volume of the oversize removed from the test hole, the bulk specific gravity of any oversize material must be determined in accordance with USBR 5320. If mortar is used in preparing the test pit, the volume of the mortar is determined in accordance with USBR *4138.

3. Applicable Documents

3.1 *USBR Procedures*:

USBR 3900 Standard Definitions of Terms and Symbols Relating to Soil Mechanics

USBR *4138 Density, Yield, Clean Separation, and Air Content (Gravimetric) of Concrete

USBR 5300 Determining Moisture Content of Soil and Rock by the Oven Method

USBR 5320 Determining Specific Gravity of Soils

USBR 5525 Determining the Minimum Index Unit Weight of Cohesionless Soils

USBR 5530 Determining the Maximum Index Unit Weight of Cohesionless Soils

* *Concrete Manual*, Bureau of Reclamation, part 2, in press.

USBR 7205 Determining Unit Weight of Soils In-Place by the Sand-Cone Method
USBR 7206 Determining Unit Weight of Soils In-Place by the Rubber Balloon Method.
USBR 7215 Determining the Unit Weight of Soils In-Place by the Sleeve Method
USBR 7220 Determining Unit Weight of Soils In-Place by the Sand Replacement Method in a Test Pit
USBR 7240 Performing Rapid Method of Construction Control
USBR 7250 Determination of Percent Relative Density
USBR 7255 Determining the Percent Compaction of Earthwork for Construction Control

3.2 *ASTM Standards*:
E 1 Standard Specification for ASTM Thermometers
E 11 Specification for Wire-Cloth Sieves for Testing Purposes

4. Summary of Method

4.1 The ground surface at the test location is prepared and a template (metal ring) is placed and fixed into position. A plastic liner is laid in the template and the volume of the space between a selected level within the template and the ground surface is determined by pouring water into the space. The mass or volume of the water required to fill the template to the selected level is determined and the water and liner removed. Soil from within the boundaries of the template is excavated forming a pit. A liner is placed in the test pit and template, water is poured into the pit and template up to the selected level; the mass or volume of the water within the pit and template and, subsequently, the volume of the hole is determined. The wet unit weight of the in-place soil is calculated from the mass of soil removed and the measured volume of the test pit. The moisture content is determined and, thus, the dry unit weight of the in-place soil is calculated.

4.2 The unit weight of a fraction of the soil can be determined by subtracting the mass and volume of any oversize from the initial values and recalculating the unit weight.

5. Significance and Use

5.1 This procedure is used to determine the in-place unit weight of soils compacted in construction of earth embankments, road fills, and structure backfill. For construction control, it is used as the basis for acceptance of soil compacted to a specified unit weight or to a percentage of a maximum unit weight determined by a standard laboratory test method.

5.2 This procedure can be used to determine in-place unit weight of natural soil deposits, aggregates, soil mixtures, or other similar material.

6. Terminology

6.1 Definitions are in accordance with USBR 3900.

6.2 Terms not included in USBR 3900 specific to this designation are:

6.2.1 *Control Fraction.*–The portion of a soil sample consisting of particles smaller than a designated sieve size. This fraction is used to compare in-place unit weights with standard laboratory unit weights. The control sieve size depends on the laboratory test used.

6.2.2 *Oversize.*–The portion of a soil sample consisting of the particles larger than a designated sieve size.

7. Apparatus

7.1 *General Apparatus*:

7.1.1 *Balance or Scale.*–A balance or scale having a capacity appropriate to the mass and procedural techniques for the specific test pit dimensions within the range of 3 to 100 ft^3 volume. The accuracy of the balance or scale must be sufficient to determine the mass to the nearest 0.1 percent at any point within the range of use.

7.1.2 *Balance or Scale.*–A typical balance or scale used to determine moisture content of minus No. 4 material must be readable to 0.1 gram and have a capacity of about 1000 grams.

7.1.3 *Drying Oven.*–An oven, thermostatically controlled, preferably of the forced-draft type, and capable of maintaining a uniform temperature of 230±9 °F (110±5 °C) throughout the drying chamber.

7.1.4 *Sieves.*–U.S.A. Standard series No. 4 (4.75-mm) and 3-inch (75-mm) sieves, conforming to the requirements of ASTM E 11.

7.1.5 *Thermometer.*–0 to 50 °C range, 0.5 °C gradations, conforming to the requirements of ASTM E 1.

7.2 *Equipment Unique to This Procedure*:

7.2.1 *Metal Template.*–The ring illustrated on figure 1 is typical. Templates of various materials or shapes may be used as long as the template is rigid enough to serve as a pattern for the excavation and to avoid deformations that would affect the test result. The size must be such that the minimum volume of the excavated pit is obtained (table X1.2 and/or table X1.3, app. X1).

Since it may be difficult to place the template exactly level, particularly with 6 foot and larger diameter rings, the height of the template should accommodate a slope of approximately 5 percent. Because the water level has to be below the top of the template, it is not necessary that the template be level. The larger rings should be high enough to prevent any loss of water due to wave action caused by wind.

7.2.2 *Plastic Sheet.*–Plastic sheeting, 4 to 6 mils thick. Two pieces, each large enough to line the test pit with about 3 feet, extending beyond the outside of the template.

7.2.3 *Water Measuring Device.*–Equipment including a storage container, delivery hoses or piping, and a water meter, scale, or other suitable measurement device. Water may be measured by mass or by volume. The equipment must be capable of controlling the delivery of the water so that any inaccuracies in filling and measuring do not exceed ±1 percent of the total mass or volume delivered.

7.2.4 *Water-Level Reference Indicator.*–A reference

Figure 1. – A 6-foot-diameter metal ring for determining in-place unit weight.

water level must be established so that the water level in the template is the same for the two determinations. A hook gauge, a rod with a pointed end that can be fastened to the template, a carpenter's level and scale, a carpenter scale on a beam across the template, or other similar arrangement may be used—provided the water level is determined at the exact same location for both determinations.

7.2.5 Siphon hose, pump, buckets, hoses, or other suitable equipment to move water to and from the template and/or pit and any storage container or reservoir.

7.3 *Miscellaneous Equipment.*–Sandbags used to prevent movement of the template during the test; shovels, picks, chisels, bars, knives, and spoons for digging test pit; buckets or seamless cans with lids, drums, barrels, or other suitable containers for retaining the test specimen without moisture change; cloth for collecting excess soil; assorted pans and porcelain dishes suitable for drying moisture content specimens; boards, planks, etc., to serve as a work platform when testing soils that may flow or deform; hoists, slings, chains, and other suitable equipment that may be required to handle heavy loads; surveyor's level and rod or other suitable equipment for checking the slope on the template in place; duct tape and/or mortar used to prevent tearing of the plastic sheeting by sharp rock fragments.

8. Precautions

8.1 *Safety Precautions.*–This designation may involve hazardous materials, operations, and equipment, and handling heavy loads.

8.2 *Technical Precautions*:

8.2.1 Soils that may flow or deform during the test must be identified and appropriate precautions taken.

8.2.2 Errors may arise in the computed unit weight of soil due to the influence of excessive moisture in the soil. These errors may be significant in soils having high permeability such as sands and gravels where the bottom of the test hole is close to or below the water table. The buoyant forces of free water beneath or behind the liner may adversely affect the volume determination.

8.2.3 The test area and equipment must be suitably protected during periods of inclement weather such as rain, snowfall, or high wind.

8.2.4 Numerous containers may be required during performance of this procedure. All containers must be properly labeled to avoid a possible mixup.

8.2.5 The total mass of the water and/or soil sample may exceed the capacity of the scale used, requiring cumulative determinations of mass. Care must be taken to ensure that the total mass is properly determined.

9. Calibration and Standardization

9.1 Verify that equipment is currently calibrated in accordance with the applicable calibration procedure. If the calibration is not current, perform the calibration before using the equipment for this procedure.

10. Procedure: Method A — In-Place Unit Weight of Total Material

10.1 The calculated volume of the test pit and all subsequent data are to be recorded on the "In-Place Unit

Weight Test Record" form as shown on figure 2. Method A is used to determine a total unit weight. If percent compaction or percent relative density is required method B is used. Data used to calculate the volume of the test pit are to be recorded on a form developed for the circumstances for each specific test and similar to the forms of figure 3 "Test Pit Volume — Measured Mass of Water," and figure 4 "Test Pit Volume — Measured Volume of Water."

10.1.1 Since this procedure covers a wide range of potential values of mass, it is not practical to specify the resolution of the value to be recorded. The mass should be recorded to the smallest subdivision readable on the balance or scale used (see subpar. 7.1.1).

10.2 Determine the recommended sample volume and select the appropriate template for the anticipated soil gradation in accordance with information in appendix X1. Assemble the remainder of the required equipment.

10.3 Determine the mass of each combination of empty container, lid, and container liner (if used) that will contain the excavated soil. Number the containers and mark as to use. The mass may be written on the container or a separate prepared list.

10.4 Prepare the quantity of water to be used. The volume of the excavated test pit is determined by filling the test pit with water and either the mass or volume of the water measured. Measuring the mass of water used is usually only practical for 3- to 4-foot-diameter rings. If the mass of water is measured follow subparagraph 10.4.1. If the volume of water is measured follow subparagraph 10.4.2.

10.4.1 If the mass of water used is measured, containers of water must be prepared with the mass of water determined before and after the test. For test pits having volumes of 3 to 6 ft^3, 5-gallon buckets of water can be used and the mass determined on a balance or scale normally found in a laboratory. Larger test pit volumes can be measured using water contained in tanks or 55-gallon drums if equipment, such as a hoist and a suitable scale, is available to determine the mass.

10.4.1.1 A separate form must be developed to record the mass of water used and to calculate the volume of the test pit. Because of the variability of the volumes and the equipment used, a standard form is not practical. An example form is shown on figure 3.

10.4.1.2 Two sets of water and containers are necessary. Determining the volume of the test pit requires two separate determinations of the mass of water (1) to measure the mass of water used to fill the space between the soil surface (before the test pit is excavated) and a reference water level in the template, and (2) to measure the mass of water used to fill the test pit up to the same reference water level. The difference between the two masses is the mass of water in the test pit.

10.4.1.3 Estimate the mass of water (and the number of containers) required to fill the template. The estimated mass may be calculated by multiplying the template volume by the density of water, 62.3 lbm/ft^3. This assumes the water temperature is between 18 to 24 °C. Number the containers to be used and mark as to use. Fill the containers with water, and determine and record the mass of the containers and water.

10.4.1.4 From the anticipated volume of the test pit, estimate the mass of water required to fill the test pit. The estimated mass of water to be used for the test pit may be calculated by multiplying the anticipated volume of the test pit by the density of water, 62.3 lbm/ft^3. Increase this amount by about 25 percent to ensure that a sufficient supply of water is available at the site, and then add to it the mass of water calculated in subparagraph 10.4.1.3. Determine the number of containers required, number them, and mark as to use. Fill the containers with water, and determine and record the mass of the containers and water. Proceed to subparagraph 10.5.

10.4.2 If the volume of water used is measured, a water measuring device is used to measure the gallons of water used from either a water truck, a large water reservoir, or large containers of water such as 55-gallon drums. The water measuring device must meet the requirements of subparagraph 7.2.3.

10.4.2.1 A separate form must be developed and used to record the volume of water used and to calculate the volume of the test pit. Because of the variability of equipment used, a standard form is not practical. An example form is shown on figure 4.

10.4.2.2 Two separate determinations of volume are necessary (1) to measure the volume of water to fill the space between the soil surface (before the test pit is excavated) and a reference water level in the template, and (2) to measure the volume of water used to fill the test pit up to the same reference water level in the template. The difference between the two volumes is the volume of water in the test pit.

10.4.2.3 The approximate volume of water required equals the anticipated volume of the test pit plus twice the calculated volume of the template. If appropriate, multiply the required volume (in cubic feet) by 7.4806 to determine the volume in gallons. Add some excess to ensure that a sufficient supply of water is available at the site. If containers are used, determine the number required and fill the containers with water; otherwise, fill the water truck or water reservoir with sufficient water.

10.5 Select a representative area for the test and avoid locations where removal of large particles would undermine the template.

10.6 Prepare the surface of the area to be tested.

10.6.1 Remove all loose soil from an area large enough on which to place the template. Prepare the exposed surface so that it is a firm, reasonably level plane.

10.6.2 Personnel should not step on or around the area selected for testing. A working platform should be provided when testing soils which may flow or deform.

10.7 Place and seat the template on the prepared surface.

10.7.1 Firmly seat the template to avoid movement of the template while the test is performed. The use of nails, weights, or other means may be necessary to maintain the position. Check the elevation at several locations on

7-1425 (12-85) Bureau of Reclamation

IN PLACE UNIT WEIGHT TEST RECORD

Designation USBR 7221-89

SAMPLE NO. Example	FEATURE	PROJECT	
TEST NO.	SOURCE OF MATERIAL		
LOCATION	OFFSET	ELEV.	ZONE
TESTED BY / DATE	COMPUTED BY / DATE	CHECKED BY / DATE	

(1) Mass-Sand & Can(s), No(s). . . . . lbm

(2) Mass-Sand Residue & Can(s) . . . . . lbm

(3) Mass-Sand used, (1) - (2) . . . . . lbm

(4) Mass-Sand in Template[a] & Cone, No. . . . . lbm

(5) Mass-Sand in Hole, (3) - (4) . . . . . lbm

(6) Density of Calibrated Sand . . . . . lbm/ft^3

(7) Vol. of Hole, $\frac{(5)}{(6)}$ . . . . . 27.167 ft^3

(8) Mass-Wet Soil, Oversize & Can(s) . . . . . 4089.0 lbm

(9) Mass-Can(s), No(s). . . . . 279.0 lbm

(10) Mass-Wet Soil & Oversize (8) - (9) . . . . 3810.0 lbm

(11) Wet Unit Weight Soil & Oversize $\frac{(10)}{(7)}$ . . . 140.2 lbf/ft^3

(12) Dry Unit Weight Soil & Oversize,

$\frac{(11)}{1 + [(w_f)/100]}$ . . . . . 127.2 lbf/ft^3

$lbf/ft^3 \times 0.1571$ . . . . . 20.0 kN/m^3

(13) Mass-Wet Oversize[b] & Pan . . . . . lbm

(14) Mass-Pan, No. . . . . lbm

(15) Mass Wet Oversize[b] (13) - (14) . . . . . lbm

(16) Mass-Oversize in Water . . . . . lbm

(17) Volume of Oversize[b] $\frac{(15) - (16)^*}{62.4}$ . . . . . ft^3

(18) Sp. G. of Oversize[b] $\frac{(15)}{[(15) - (16)]}$ . . . . . .

(19) Mass-Dry Oversize & Pan . . . . . lbm

(20) Mass-Pan, No. . . . . lbm

(21) Mass-Oven Dry Oversize (19) - (20) . . . . . lbm

* Or $(17)_A$ by measuring the water displaced from a siphon can, then;

$(18)_A = \frac{(15)}{(17) \times 62.4}$

(22) Moisture Content, Oversize, w_{os}

$\frac{(15) - (21)}{(21)} \times 100$ . . . . . %

(23) Mass-Wet Soil, (10) - (15) . . . . . lbm

(24) Wet Unit Weight of Soil, $\frac{(23)}{(7) - (17)}$ . . . . . lbf/ft^3

(25) Mass-Dry Soil, $\frac{(23)}{1 + (w_f/100)}$ . . . . . lbm

(26) Mass-Dry Soil & Oversize (25) + (21) . . . . . lbm

(27) Percentage of Oversize, $\frac{(21)}{(26)} \times 100$ . . . . . %

(28) Moisture Content, Soil & Oversize, w

$\frac{(10) - (26)}{(26)} \times 100$ . . . . . %

(29) Dry Unit Weight, Control Fraction

$\frac{(24)}{1 + (w_f/100)}$ . . . . . lbf/ft^3

$lbf/ft^3 \times 0.1571$ . . . . . kN/m^3

Moisture Content Determination — TOTAL ~~CONTROL~~ FRACTION

(1) Mass-Wet Soil & Dish	664.4	lbm
(2) Mass-Dry Soil & Dish	613.2	lbm
(3) Mass-Dish No. 10	111.2	lbm
(4) Mass-Water (1) - (2)	51.2	lbm
(5) Mass-Dry Soil (2) - (3)	502.0	lbm
(6) Moisture Content $\frac{(4)}{(5)} \times 100$	w_f 10.2	%

Soil Classification _____

REMARKS Maximum size 12 inch

6 ft. diameter ring

AUXILIARY TESTS: USBR 1435 - _ _
1436 - _ _
5300 - 89
5320 - _ _
5505 - _ _

(a) Template Calibration USBR 7220
(1) Mass-Sand & Can(s) No. . . . . lbm
(2) Mass-Sand Residue & Can(s) . . . . . lbm
(3) Mass-Sand in Template (1) - (2) . . . . . lbm

(b) Surface dried condition

GPO 850 - 647

Figure 2. - In-place unit weight test record — example.

7-2406 (12-86) Bureau of Reclamation	TEST PIT VOLUME MEASURED MASS OF WATER	Designation USBR 7221 - 89
PROJECT: Example	FEATURE	TEST NO.
SOURCE OF MATERIAL	LOCATION	
OFFSET	ELEV	ZONE
TESTED BY — DATE	COMPUTED BY — DATE	CHECKED BY — DATE

MASS OF WATER IN TEMPLATE

MASS CONTAINER(S) AND WATER

CONTAINER NO.	INITIAL (lbm)	FINAL (lbm)	MASS OF WATER USED (lbm)
3	448.4	174.1	274.3

(1) TOTAL MASS OF WATER IN TEMPLATE = 274.3 lbm

MASS OF WATER IN TEST PIT AND TEMPLATE

MASS CONTAINER(S) AND WATER

CONTAINER NO.	INITIAL (lbm)	FINAL (lbm)	MASS OF WATER USED (lbm)
4	449.0	30.9	418.1
5	449.8	31.1	418.7
6	448.8	448.8	0

TEMPERATURE OF WATER: 21.0 °C

(2) TOTAL MASS OF WATER USED = 836.8 lbm

MASS OF WATER IN TEST PIT

(3) MASS OF WATER IN TEST PIT = (2) - (1) = 562.5 lbm

DENSITY OF WATER

(4) DENSITY OF WATER AT TEST TEMPERATURE (TABLE 1) = 0.997992 g/cm^3

(5) DENSITY OF WATER (INCH-POUND UNITS) = (4) X 62.428 = 62.303 lbm/ft^3

VOLUME OF TEST PIT

VOLUME OF TEST PIT = (3)/(5) 9.028 ft^3

Figure 3. - Test pit volume — measured mass of water — example.

7-2405 (12-86) Bureau of Reclamation	TEST PIT VOLUME MEASURED VOLUME OF WATER	Designation USBR 7221 - 89

PROJECT	FEATURE	TEST NO.
Example		

SOURCE OF MATERIAL	LOCATION

OFFSET	ELEV	ZONE

TESTED BY	DATE	COMPUTED BY	DATE	CHECKED BY	DATE

VOLUME OF WATER IN TEMPLATE (gallons)

(1) FINAL READING OF WATER METER = 105.7 gal
(2) INITIAL READING OF WATER METER = 0 gal

(3) VOL = (1) - (2) = 105.7 gal

VOLUME OF WATER IN TEST PIT AND TEMPLATE (gallons)

(4) FINAL READING OF WATER METER = 413.5 gal
(5) INITIAL READING OF WATER METER = 105.7 gal

(6) VOL = (4) - (5) = 307.8 gal

VOLUME OF WATER IN TEST PIT (gallons)

(7) VOL = (6) - (3) = 202.1 gal

VOLUME OF WATER IN TEST PIT (ft^3)

(8) VOL = (7) X 0.13368 = 27.017 ft^3

VOLUME OF MORTAR (ft^3)

(9) MASS USED 22.29 lbm
(10) DENSITY 148.6 lbm/ft^3
(11) VOL = (9)/(10) = 0.150 ft^3

VOLUME OF TEST PIT (ft^3)

VOL = (8) + (11) = 27.167 ft^3

Figure 4. - Test pit volume — measured volume of water — example.

the template. Since the reference water level is kept below the top of the template, it is not necessary that the template be exactly level, but the slope of the template should not exceed 5 percent.

10.7.2 Remove any soil loosened while placing and seating the template; take care to avoid leaving any void space under the template. If necessary, voids under the template may be filled using plastic soil, modeling clay, mortar, or other suitable material, provided that these materials are not subsequently excavated as part of the soil removed from the test pit.

10.7.3 Inspect the surface of the soil within the template. If necessary, cover any sharp edges with duct tape or other suitable material to prevent tearing or puncturing of the plastic lining.

10.8 Determine the volume of the space between the soil surface and the reference water level.

10.8.1 Irregularities of the soil surface within the template must be taken into account. To do this, the volume of water required to fill the space between the soil surface and the reference water level must be determined.

10.8.2 Place a plastic liner (4 to 6 mils thick) over the template, and shape it by hand to conform to the irregular soil surface and the template. The liner should extend about 3 feet outside the template. The liner should not be stretched too taut or contain excessive folds or wrinkles (see fig. 5).

10.8.3 Assemble the equipment for the reference water level indicator. Normally, the reference water level is set after the water in the template reaches a practical level.

10.8.4 If the volume of water is being measured, set the water-measuring device indicator to zero or record the initial reading of the indicator. Pour the water from the containers or discharge the water from the water reservoir into the template until the water level reaches a practical level. The slope of the template and any possible wave action must be considered to prevent losing any water. Set the water-level reference indicator (see fig. 6). If the volume of water is being measured, record the final reading of the water-measuring device. If the mass of water is being measured, save the remaining water for a subsequent determination of mass.

10.8.5 Make markings as appropriate so the water level indicator can be placed in the identical position and at the same elevation following excavation of the test pit. Disassemble the reference water level indicator.

10.8.6 Remove the water in the template and remove the liner.

10.9 Excavate the test pit.

10.9.1 Using handtools (shovel, chisel, knife, bar, etc.), excavate the center portion of the test pit. Removal of large particles may require use of heavy equipment such as a backhoe or a mechanical or hydraulic hoist.

10.9.1.1 Movement of heavy equipment in the area of the test should not be permitted if deformation of the soil within the test pit may occur.

10.9.2 Place all soil removed from the test pit in the container(s); be careful to avoid losing any soil.

NOTE 1.–For the smaller size templates where the containers for the soil may be outside the template, a cloth or plastic sheet

Figure 5. – Plastic liner placed in preparation for the initial volume determination.

Figure 6. – Measuring the reference water level with carpenter's square.

may be placed under the containers to facilitate locating and collecting any loose soil.

10.9.3 Avoid soil moisture loss by keeping the container(s) covered while soil is not being placed in it. A sealable plastic bag may be used inside the container to hold the soil.

10.9.4 Carefully trim the sides of the excavation so the dimensions of the test pit at the soil-template contact are as close as possible to that of the template hole. Avoid disturbing the template or the soil beneath or outside the template.

10.9.5 Continue the excavation to the required depth, carefully remove any material that has been compacted or loosened in the process.

10.9.5.1 If — during excavation of soil from within the test pit — a particle (or particles) is found that is about 1-1/2 times, or more, larger than the maximum particle size used to establish the dimensions and minimum volume of the test pit (see app. X1), set the particle(s) aside and mark appropriately. The mass and volume of the particle(s) must be determined and subtracted from the mass and volume of the material removed from the test pit. Consider the larger particles(s) as "oversize" and follow the procedure outlined in paragraph 11 except that the "total" unit weight, which would include the larger particle(s), need not be calculated. The "control fraction" values determined then become the values for the total material from the test pit.

If enough of these particles are found so their mass is determined to be 5 percent or more of the mass of the excavated soil, the test should be repeated with a larger test pit in accordance with the guidelines in appendix X1.

10.9.6 The sides of the pit should be as close to vertical as possible but will of necessity slope inward (see fig. 7). Soils that do not exhibit much cohesion will result in a more conically shaped test pit.

10.9.7 The profile of the finished pit must be such that the water will completely fill the excavation. The sides of the test pit should be as smooth as possible and free of pockets or overhangs.

10.9.8 The bottom of the test pit must be cleaned of all loosened soil.

10.9.9 Inspect the surface of the soil within the template. Cover any sharp edges with duct tape or other suitable material to prevent tearing or puncture of the plastic lining. Mortar may be used to fill recesses to eliminate sharp edges, overhangs, or pockets that cannot be smoothed or eliminated.

10.9.9.1 If mortar is required, the mass of mortar used must be measured and recorded. Calculate the volume in cubic feet in accordance with USBR 4138.

10.10 Determine the volume of the test pit.

10.10.1 Place the plastic liner into the test pit. The liner (4 to 6 mils thick) should be large enough to extend about 3 feet outside the template boundaries after having been carefully placed and shaped within the pit. Allowances must be made for slack. The liner should not be stretched too taut nor contain excessive folds or wrinkles. Inspect the liner for punctures before use.

10.10.2 If the volume of water is being measured, set the water measuring device indicator to zero or record

Figure 7. – Test pit during excavation.

the initial reading of the indicator. Pour the water from the containers or discharge the water from the water reservoir into the test pit until the water reaches the reference water level indicator. When the filling is complete, record the final reading of the water-measuring device indicator. If the mass of water is being measured, set aside the remaining water for a subsequent determination of mass. If necessary, calculate the gallons of water used.

10.10.3 If the mass of the water is being measured, determine and record the temperature of the water in the test pit to the nearest 0.5 °C.

10.10.4 Remove the water from the test pit and remove the liner. Inspect the liner for any holes that may have allowed water to escape during the test. Loss of water will require another determination of the volume.

10.11 Calculate the volume of the test pit.

10.11.1 If the mass of water is being measured, determine the mass as follows (fig. 3):

10.11.1.1 Determine and record the mass of the container(s) and remaining water after filling the template (space between the soil surface and the reference water level).

10.11.1.2 Calculate and record the total mass of water used to fill the template to the reference water level.

10.11.1.3 Determine and record the mass of the container(s) and remaining water after filling the test pit and template to the reference water level.

10.11.1.4 Calculate and record the total mass of water used to fill the test pit and template to the reference water level.

10.11.1.5 Calculate and record the mass of water used to fill the test pit.

10.11.1.6 Calculate and record the density of water at the test temperature in lbm/ft^3.

10.11.1.7 Calculate and record the volume of water used to fill the test pit to the nearest 0.001 ft^3. If mortar was not used, this value is the volume of the test pit. If mortar was used, add the calculated volume of mortar to the volume of water used to determine the volume of the test pit. Record the volume of the test pit on the "In-Place Unit Weight Test Record" form (fig. 2).

10.11.2 If the volume of the water is being measured, determine the volume as follows (fig. 4):

10.11.2.1 Calculate and record to the nearest 0.1 gallon the volume of water used to fill the template (space between the soil surface and the reference water level).

10.11.2.2 Calculate and record the volume of water used to fill the test pit and template to the nearest 0.1 gallon.

10.11.2.3 Calculate and record to the nearest 0.1 gallon the volume of water used to fill the test pit.

10.11.2.4 Calculate and record to the nearest 0.001 ft^3 the volume of water used to fill the test pit. If mortar was not used, this value is the volume of the test pit. If mortar was used, add the calculated volume of mortar (see subpar. 10.9.9.1) to the volume of water used to determine the volume of the test pit. Record the volume of the test pit on the "In-Place Unit Weight Test Record" form (fig. 2).

10.12 Determine the dry unit weight. Use the "In-Place Unit Weight Test Record" form (fig. 2).

10.12.1 Determine the total mass of the excavated soil and containers.

10.12.2 Calculate and record the total mass of the containers used to hold the excavated soil. Record the container numbers.

10.12.3 Calculate and record the mass of excavated soil.

10.12.4 Calculate the wet density of excavated soil to the nearest 0.1 lbm/ft³.

10.12.4.1 Convert wet density to wet unit weight by changing lbm/ft³ to lbf/ft³ (assume 1 lbf = 1 lbm) and record to the nearest 0.1 lbf/ft³.

10.12.5 If percent compaction or percent relative density is required, separate the material using the appropriate size sieve and follow the procedures in method B.

10.12.6 If method B is not used obtain a moisture content specimen representative of the excavated soil; determine the moisture content in accordance with USBR 5300 and record to the nearest 0.1 percent.

NOTE 2.–For rapid moisture content determination of soils containing less than 15-percent fines [minus No. 200 (75 μm)], a suitable source of heat such as an electric or gas hotplate may be used. If a source of heat other than the controlled temperature oven is used, stir the sample to accelerate drying and avoid localized overheating. The soil may be considered dry when further heating causes, or would cause, less than 0.1-percent additional loss of mass.

10.12.7 Calculate and record to the nearest 0.1 lbf/ft³ the dry unit weight of the soil. If required, convert and record the dry unit weight to the nearest 0.02 kN/m³ for SI units.

11. Procedure: Method B — In-Place Unit Weight of Control Fraction

11.1 This method is used when percent compaction or percent relative density is required. Applicable forms as explained in USBR 7205, 7220, or 7240 may be used.

11.2 Obtain the in-place wet unit weight of total material by following the procedure for method A as stated in paragraph 10.

11.3 To obtain the wet unit weight of the control fraction, the mass and volume of the oversize are determined and subtracted from the total mass and total volume to obtain the mass and volume of the control fraction. The unit weight of the control fraction can be calculated from the mass and volume of the control fraction.

11.3.1 Normally, the wet unit weight of the control fraction is determined and the dry unit weight calculated using the moisture content of the control fraction.

11.3.2 In addition, the moisture content of the oversize, the moisture content of the total material, and the percentage of oversize are determined.

11.4 After obtaining the wet mass of total soil removed from the test pit, separate the soil into the control fraction and the oversize using the designated sieve. This should be done rapidly to minimize loss of moisture. If the test is for construction control, place the control fraction in an airtight container for further tests.

11.5 Wash the oversize using a minimum of water and blot to a surface-dry condition.

11.6 Determine and record the wet mass of the oversize plus container of predetermined mass.

11.7 Calculate and record the wet mass of the oversize.

11.8 Calculate and record the wet mass of the control fraction.

11.9 Calculate the volume of the oversize material to the nearest 0.001 ft³ by using the bulk specific gravity of the oversize. If previous tests for bulk specific gravity of the oversize from a particular source have been performed and the value is relatively constant, a specific gravity may be assumed. The bulk specific gravity used in this designation is determined on a wet surface dry basis (see subpar. 11.5). This is not the same as bulk specific gravity (saturated surface dry) although the bulk specific gravity (saturated surface dry) may be used instead. However, do not use a bulk specific gravity (oven dry) value for this designation. Refer to USBR 5320 for definition and explanation of these terms. If the bulk specific gravity is not known, determine the bulk specific gravity.

11.9.1 Obtain a representative sample and determine the bulk specific gravity in accordance with method B or C of USBR 5320 except that the 24-hour soaking period may be waived. If method B (siphon displacement method) of USBR 5320 is used, to accommodate the larger sample and larger particles a container (such as a bucket, trash can, or 50-gallon drum) may be adapted for use as the siphon can. Record the bulk specific gravity to the nearest 0.01.

11.10 Calculate the volume of the control fraction and record to the nearest 0.001 ft³.

11.11 Calculate the wet density of the control fraction to the nearest 0.1 lbm/ft³.

11.11.1 Convert density to wet unit weight by changing lbm/ft³ to lbf/ft³ (assume 1 lbf = 1 lbm) and record to the nearest 0.1 lbf/ft³.

11.12 Determine and record the moisture content of the control fraction in accordance with USBR 5300.

11.13 Calculate and record to the nearest 0.1 lbf/ft³ the dry unit weight of the control fraction. If required, convert and record the dry unit weight to the nearest 0.02 kN/m³ for SI units.

11.14 Determine and record the moisture content of the oversize in accordance with USBR 5300. If previous tests for moisture content of the oversize from a particular source have been performed and the value is relatively constant, a moisture content may be assumed.

11.15 Determine the percentage of oversize.

11.15.1 Calculate and record the dry mass of the control fraction.

11.15.2 Calculate and record the dry mass of the oversize.

11.15.3 Calculate and record the dry mass of the total sample.

11.15.4 Calculate the percentage of oversize and record to the nearest 0.1 percent.

11.16 Calculate the moisture content of the total material and record to the nearest 0.1 percent.

11.17 Calculate and record to the nearest 0.1 lbf/ft³ the dry unit weight of the total material. If required, convert and record the dry unit weight to the nearest 0.02 kN/m³ for SI units.

12. Calculations — Method A

12.1 The following symbols are used in calculations for method A of this designation.

m_1 = mass of water and containers for template and test pit volume (before test), lbm
m_{c1} = mass of water and containers for template volume (before test), lbm
m_2 = mass of water and containers for template and test pit volume (after test), lbm
m_{c2} = mass of water and containers for template volume (after test), lbm
m_3 = mass of water used for template and test pit volume, lbm
m_4 = mass of water for template volume, lbm
m_5 = mass of water in test pit, lbm
m_8 = mass of wet material removed from hole plus mass of containers, lbm
m_9 = mass of containers, lbm
m_{10} = mass of wet material removed from hole, lbm
m_m = mass of mortar in test pit, lbm
V_1 = volume of water used to fill test pit and template, gallons
V_2 = volume of water used to fill template, gallons
V_g = volume of water in test pit, gallons
V_{wt} = volume of water in test pit, ft³
V_m = volume of mortar in test pit, ft³
V_t = volume of test pit, ft³
ρ_w = density of water, lbm/ft³
ρ_{wet} = wet density of excavated soil, lbm/ft³
ρ_m = density of mortar, lbm/ft³
γ_{wet} = wet unit weight of excavated soil, lbf/ft³
γ_d = dry unit weight of excavated soil, lbf/ft³ (or kN/m³)
w = moisture content of excavated soil, %

12.2 Calculate the mass of the water used to fill the test pit and template.

$$m_3 = m_1 - m_2 \quad (1)$$

12.3 Calculate the mass of the water used to fill the template.

$$m_4 = m_{c1} - m_{c2} \quad (2)$$

12.4 Calculate the mass of the water used to fill the test pit.

$$m_5 = m_3 - m_4 \quad (3)$$

12.5 Calculate the density of water at test temperature in lbm/ft³.

$$\rho_w, \text{ lbm/ft}^3 = 62.428\ (\rho_w, \text{ g/cm}^3 \text{ at test temperature}) \quad (4)$$

where ρ_w, g/cm³ at test temperature is from table 1.

12.6 Calculate the volume of water used to fill the test pit in ft³.

12.6.1 Measured mass of water.

$$V_{wt} = \frac{m_5}{\rho_w, \text{ lbm/ft}^3} \quad (5)$$

or

12.6.2 Measured volume of water.

$$V_{wt} = 0.13368\ V_g \quad (6)$$

where V_g equals $V_1 - V_2$, and 0.13368 equals constant to convert from gallon to cubic foot

12.7 Calculate the volume of mortar.

$$V_m = \frac{m_m}{\rho_m} \quad (7)$$

Table 1. – Absolute density of water in grams per cubic centimer.†

Degrees C	0	1	2	3	4	5	6	7	8	9
0	0.999841	847	854	860	866	872	878	884	889	895
1	900	905	909	914	918	923	927	930	934	938
2	941	944	947	950	953	955	958	960	962	964
3	965	967	968	969	970	971	972	972	973	973
4	973	973	973	972	972	972	970	969	968	966
5	965	963	961	959	957	955	952	950	947	944
6	941	938	935	931	927	924	920	916	911	907
7	902	898	893	888	883	877	872	866	861	855
8	849	843	837	830	824	817	810	803	796	789
9	781	774	766	758	751	742	734	726	717	709
10	700	691	682	673	664	654	645	635	625	615
11	605	595	585	574	564	553	542	531	520	509
12	498	486	475	463	451	439	427	415	402	390
13	377	364	352	339	326	312	299	285	272	258
14	244	230	216	202	188	173	159	144	129	114
15	099	084	069	054	038	023	007	*991	*975	*959
16	0.998943	926	910	893	877	860	843	826	809	792
17	774	757	739	722	704	686	668	650	632	613
18	595	576	558	539	520	501	482	463	444	424
19	405	385	365	345	325	305	285	265	244	224
20	203	183	162	141	120	099	078	056	035	013
21	0.997992	970	948	926	904	882	860	837	815	792
22	770	747	724	701	678	655	632	608	585	561
23	538	514	490	466	442	418	394	369	345	320
24	296	271	246	221	196	171	146	120	095	069
25	044	018	*992	*967	*941	*914	*888	*862	*836	*809
26	0.996783	756	729	703	676	649	621	594	567	540
27	512	485	457	429	401	373	345	317	289	261
28	232	204	175	147	118	089	060	031	002	*973
29	0.995944	914	885	855	826	796	766	736	706	676
30	646	616	586	555	525	494	464	433	402	371

† For inch-pound applications, multiply the values in this table by 62.4280 to convert to lbm/ft³.

* First three significant figures shown in line below.

12.8 Calculate the volume of the test pit.

$$V_t = V_{wt} + V_m \quad (8)$$

or, if mortar has not been used:

$$V_t = V_{wt}$$

12.9 Calculate the mass of wet material removed from the test pit.

$$m_{10} = m_8 - m_9 \quad (9)$$

12.10 Calculate the wet density of the material removed from test pit.

$$\rho_{wet} = \frac{m_{10}}{V_t} \quad (10)$$

12.10.1 In the procedure, wet density is converted to wet unit weight by changing lbm/ft³ to lbf/ft³. (Assume 1 lbm = 1 lbf.)

12.11 Calculate the dry unit weight of the material removed from the test pit.

$$\gamma_d = \frac{\gamma_{wet}}{1 + \left(\frac{w}{100}\right)} \quad (11)$$

12.11.1 Convert dry unit weight in inch-pound units to SI units, if required.

$$\text{Unit weight in kN/m}^3 = \frac{0.1571 \text{ kN/m}^3}{\text{lbf/ft}^3} \times (\text{unit weight, lbf/ft}^3)$$

13. Calculations — Method B

13.1 In addition to the symbols used in method A (par. 12), the following symbols are used in calculations for method B of this designation.

m_{13} = wet mass of oversize and container, lbm
m_{14} = mass of container, lbm
m_{15} = wet mass of oversize, lbm
m_{19} = dry mass of oversize and container, lbm
m_{20} = mass of container, lbm
m_{21} = dry mass of oversize, lbm
m_{23} = wet mass of control fraction, lbm
m_{25} = dry mass of control fraction, lbm
m_{26} = dry mass of total sample (control fraction plus oversize), lbm
V_{os} = volume of oversize, ft³
V_c = volume of control fraction, ft³
ρ_{wet} (c) = wet density of control fraction, lbm/ft³
γ_{wet} (c) = wet unit weight of control fraction, lbf/ft³
γ_d (c) = dry unit weight of control fraction, lbf/ft³ or kN/m³
γ_d = dry unit weight of total material, lbf/ft³ or kN/m³
G_m = bulk specific gravity of oversize
w = moisture content of excavated soil, %
w_f = moisture content of control fraction, %
w_{os} = moisture content of oversize, %

13.2 Calculate the wet mass of the oversize.

$$m_{15} = m_{13} - m_{14} \quad (12)$$

13.3 Calculate the wet mass of the control fraction.

$$m_{23} = m_{10} - m_{15} \quad (13)$$

13.4 Calculate the volume of the oversize based on a known bulk specific gravity.

$$V_{os} = \frac{m_{15}}{62.4\ G_m} \quad (14)$$

where 62.4 equals density of water, lbm/ft³.

13.5 Calculate the volume of the control fraction.

$$V_c = V_t - V_{os} \quad (15)$$

13.6 Calculate the wet density of the control fraction.

$$\rho_{wet}\,(c) = \frac{m_{23}}{V_c} \quad (16)$$

13.6.1 In the procedure, wet density is converted to wet unit weight by changing lbm/ft³ to lbf/ft³. (Assume 1 lbm = 1 lbf.)

13.7 Calculate the dry unit weight of the control fraction.

$$\gamma_d\,(c) = \frac{\gamma_{wet}\,(c)}{1 + \left(\frac{w_f}{100}\right)} \quad (17)$$

where 100 converts from percent to decimal.

13.7.1 Convert dry unit weight in inch-pound units to SI units, if required.

$$\text{Unit weight in kN/m}^3 = \frac{0.1571 \text{ kN/m}^3}{\text{lbf/ft}^3} \times (\text{unit weight in lbf/ft}^3)$$

13.8 Calculate the dry mass of the control fraction.

$$m_{25} = \frac{m_{23}}{1 + \left(\frac{w_f}{100}\right)} \quad (18)$$

where 100 converts from percent to decimal.

13.9 Calculate the dry mass of the oversize using one of the following equations as appropriate:

$$m_{21} = m_{19} - m_{20} \quad (19)$$

or:

$$m_{21} = \frac{m_{15}}{1 + \left(\frac{w_{os}}{100}\right)} \quad (20)$$

where 100 converts from percent to decimal.

13.10 Calculate the dry mass of the total sample.

$$m_{26} = m_{25} + m_{20} \quad (21)$$

13.11 Calculate the percent oversize.

$$\text{Percent oversize} = 100 \left(\frac{m_{21}}{m_{26}}\right) \quad (22)$$

where 100 converts from decimal to percent.

13.12 Calculate the moisture content of the total material.

$$w = 100 \left(\frac{m_{10} - m_{26}}{m_{26}}\right) \quad (23)$$

where 100 converts from decimal to percent.

13.13 Calculate the dry unit weight of the total material.

$$\gamma_d = \frac{\gamma_{wet}}{1 + \left(\frac{w}{100}\right)} \quad (24)$$

where 100 converts from percent to decimal.

13.13.1 Convert dry unit weight in inch-pound units to SI units, if required.

$$\text{Unit weight in kN/m}^3 = \frac{0.1571 \text{ kN/m}^3}{\text{lbf/ft}^3} \times (\text{unit weight, lbf/ft}^3)$$

14. Report

14.1 The report is to consist of the completed and checked forms (as applicable):

"In-Place Unit Weight Test Record" form (fig. 2).

Any form(s) used to calculate the volume of water used.

Any form(s) used to determine the bulk specific gravity.

14.2 All calculations are to show a checkmark.

APPENDIX

X1. GUIDELINES FOR TEST HOLE OR TEST DIMENSIONS AND SELECTION OF EQUIPMENT

X1.1 Guidelines

X1.1.1 Guidelines for selecting the appropriate sand-cone diameter and the minimum test hole volume are given in USBR 7205 and are shown in table X1.1 for reference.

X1.1.2 For test pits, the guidelines for selecting the size of the equipment and the excavation dimensions to obtain the minimum volume of soil required are shown in table X1.2. These guidelines are based on providing a representative sample of the soil being tested and on practical working conditions.

Table X1.1. – Recommended guidelines for selection of cone diameter and minimum test hole volume (from USBR 7205).

Cone diameter in	Minimum test hole volume ft³	Test hole depth in	Significant particle size in
8	*0.25	12	3/4
12	0.50	14	1-1/2

* Minimum volume for embankment dams. See USBR 7205 for explanation of hole dimensions and significant particle size.

X1.1.3 The guidelines shown in table X1.2 are for cohesive soils and for cohesionless soils whose gradation and particle angularity will allow vertical or near-vertical side walls to be excavated.

X1.1.4 For some cohesionless soils with relatively uniform gradation, the slope of the side walls will be much flatter, approximating the angle of repose of the soil. For these materials, the "worst case" is assumed with a conically shaped excavation resulting. Table X1.3 gives guidelines for the equipment, the approximate dimensions of the excavation, and the minimum volumes that would result.

Table X1.2. – Recommended guidelines for selection of test apparatus and minimum excavation volume (cohesive soils and certain cohesionless soils).

Maximum particle size in	Minimum required volume ft³	Apparatus and template opening	Required minimum depth* in
3	1.0	20-in sand cone	12
		24-in-square frame	18
5	2	30-in-square frame	12
8	8	4-ft-diameter ring	24
12	27	6-ft-diameter ring	24
18	90	9-ft-diameter ring	36
More than 18	Should be determined on a case-by-case basis		

* This depth must be attained so that the minimum required volume of material is obtained. See discussion in "Minimum Volume of Test" for explanation of shape and dimensions of test pit.

X1.2 Required Excavation Volume

X1.2.1 The minimum excavation volumes shown in tables X1.2 and X1.3 are required to provide a representative sample of the soil being tested.

X1.2.2 For this designation, a representative sample is based on the mass required to provide a gradation analysis of the soil within certain limits of accuracy.

X1.2.3 For soils having a maximum particle size of 3 inches (75 mm), the required mass (and volume) is based on a sample 100 times the mass of the maximum particle size. This results in gradation percentages with an accuracy of ±1.0 percent.

X1.2.4 For soils having a maximum particle size larger than 3 inches, the required mass is based on a sample

Table XI.3. – Recommended guidelines for test equipment for cohesionless soils "worst case".

Maximum particle size in	Minimum required volume ft³	Apparatus and template opening	Minimum required depth* in	Approximate diameter of excavated hole in
3/4	0.25	20-in sand cone**	6	19
1-1/2	0.5	24-in-square frame	7	22
3	1.0	33-in-square frame	10	30
5	2	40-in-diameter ring	12	35
8	8	62-in-diameter ring	18	54
More than 8	Should be determined on a case-by-case basis			

* This depth must be attained so that the minimum required volume of material is obtained. See discussion in "Minimum Volume of Test" for explanation of shape and dimensions of test pits.
** For "pea gravel" (No. 4 to 3/4-inch), USBR 7215 (sleeve method) may be used.

40 times the mass of the maximum particle size. This results in gradation percentages with an accuracy of ±2.5 percent.

X1.3 Type and Size of Equipment

X1.3.1 The basic types of apparatus used to determine in-place unit weight are the sand-cone device, the square metal frame, and the metal ring. Each type is practical only for specific excavation sizes.

X1.3.2 The sand-cone device is practical only up to about a 20-inch test hole diameter because of the physical difficulty in handling anything larger. The square frame is practical from about 20 inches square to about 36 inches square. Square frames are easier to fabricate than circular templates. Rings are preferred as templates for excavating test pits about 3 feet in diameter and larger because square frames need to be stiffened and can be heavier and more awkward to handle than circular templates. In addition, it is difficult to trim the excavation having corners because of the larger particle sizes present in the soil when a square frame larger than 33 inches is required. The plastic liner for the sand replacement method should be about 1/2-mil thick while the liner for the water replacement method should be about 4 to 6 mils thick. Bunching of a plastic liner 4 to 6 mils thick in the corners of a square frame may result in errors in the volume measurement.

X1.3.3 The apparatus and template sizes (shown in tables X1.2 and X1.3) were selected to provide a volume about equal to the required volume. Where there was a choice between methods, the order of preference was sand cone, square frame, and then the ring. Other sizes may be used (e.g., 27-inch-square frame) as long as the minimum volume of excavated soil can be obtained.

X1.4 Minimum Volume of Test

X1.4.1 In table X1.2, the minimum volume obtained from excavating a test pit using the template shown and the required minimum depth is based on the following assumptions:

a. The soil being excavated contains a significant amount of the maximum particle size material.

b. No matter whether the template is square or round, the excavation will be basically circular in plan view because the presence of the maximum particle size will probably prevent excavating corners.

c. The side walls will be sloped. Encountering the maximum particle in the side wall while excavating will require reducing the excavation diameter. For a maximum particle size of 3 inches, most soils can be excavated to a slope of 1 horizontal to 3 vertical or steeper; while for the 5- and 8-inch maximum particle sizes, the side walls can be excavated to a slope of 1 horizontal to 2 vertical or steeper.

d. The diameter of the excavation will be smaller than the template opening because a large particle may be just beneath the template. To prevent an overhang in the excavation, these particles should not be removed unless they are protruding into the excavation more than about two-thirds of their diameter.

e. For excavation of soils having maximum particle size up to 8 inches, the volume of the excavation is assumed to be a frustrum of a cone as shown on figure X1.1. The diameter of the excavation is assumed to be the template diameter minus the maximum particle size.

f. For excavation of soils having maximum particle sizes of 12 inches and larger, the volume of the excavation is assumed to be a spherical segment. The diameter of the excavation is assumed to be the template diameter minus two-thirds of the maximum particle size.

X1.4.2 In table X1.3, the minimum volume is assumed to be conical as shown on figure X1.1, with the depth of the excavation equal to about one-third of the hole diameter. For cohesionless soils–with relatively uniform gradation–the "worst case" is assumed where the slope of the side walls could not exceed the angle of repose of the soil.

X1.4.3 Based on these assumptions, the minimum volume of excavations shown in tables X1.2 and X1.3 is conservative. Steeper side walls or larger test hole diameters will result in larger volumes. In some cases, smaller apparatus than that indicated in tables X1.2 and X1.3 may be used if a trial test pit is excavated and it can be shown that the smaller apparatus can provide the minimum required volume. However:

- The depth of excavation should never be less than one-third of the hole diameter.
- The volume of the excavation must be 50 times larger than the volume of the maximum particle size.
- The hole diameter must be at least four times larger than the maximum particle diameter.

X1.5 Replacement Medium

X1.5.1 For the templates shown in tables X1.2 and X1.3, sand replacement using a sand-pouring device is felt to be practical for the square frames up to 33 inches, and water replacement for 40-inch and larger diameter rings.

X1.5.2 If other sizes are used, the sand replacement method is probably practical up through 36-inch-square frames, while water replacement is more practical for 36-inch-diameter rings and larger. A 36-inch opening is about the size limit where sand can be poured into the excavation uniformly and consistently while standing outside the template.

X1.6 Depth of Excavation

X1.6.1 For soils having a maximum particle size of 5 inches or less, the depth of excavation in table X1.2 is shown in 6-inch increments since cohesive soils are normally compacted in layers of 6 inches maximum thickness. The minimum depth is 12 inches so that at least two compaction lifts are included in the determination. If the in-place unit weight determination is for in-place soils, the minimum depth shown is that required to obtain the minimum volume. Greater depths–not necessarily in 6-inch increments — may be used.

X1.6.2 Shallower depths may be used for in-place soils but only if the diameter of the excavation is larger so that the minimum volume of soil is obtained. This may be necessary to test deposits of material of limited thickness.

X1.6.3 For the soils in table X1.2 having maximum particle sizes of 8 and 12 inches, the desired minimum excavation depth is shown as 24 inches since these soils would normally be placed in 12-inch lifts. For soils having an 18-inch maximum particle size, a 36-inch minimum depth is necessary to obtain the required volume.

X1.6.4 In table X1.3, the minimum depths of excavation are equal to about one-third of the hole diameter as discussed previously. The elevation of the top of the excavation should be such that the test will be representative of the lift being tested.

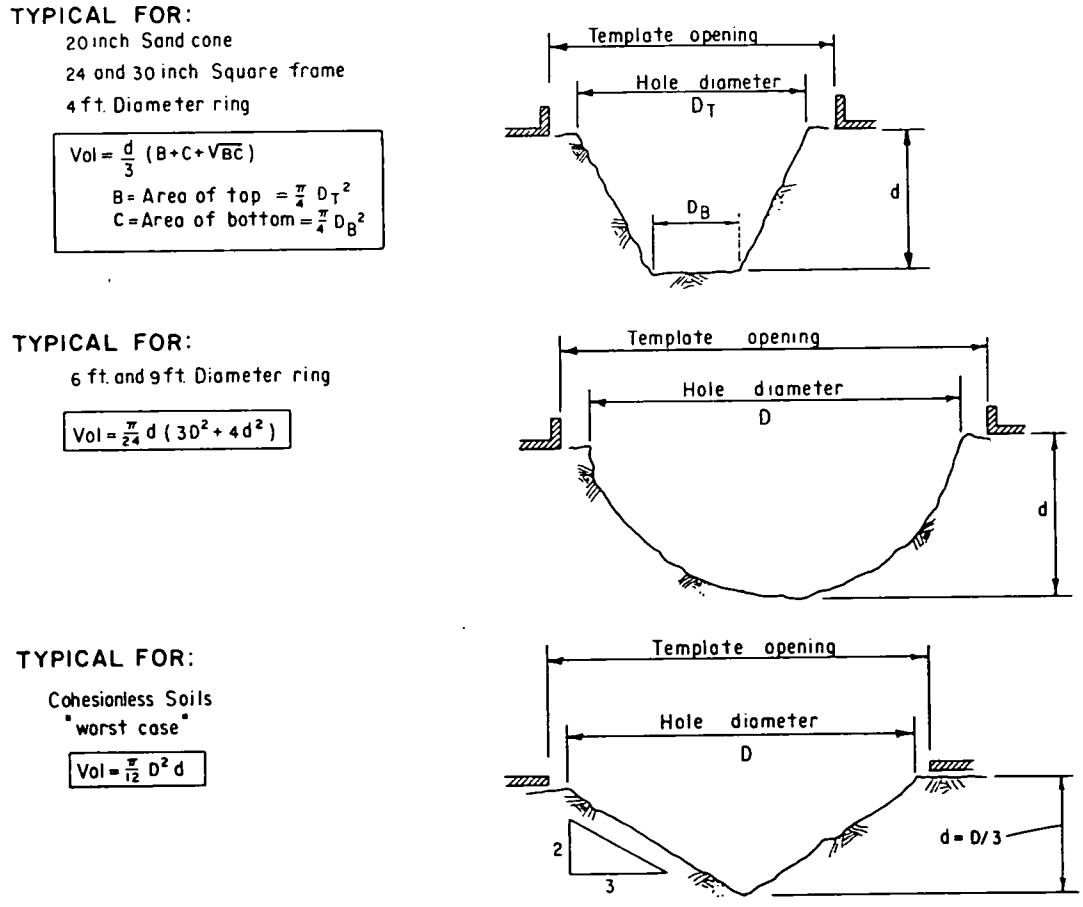

Figure X1.1. – Test pit configurations.

UNITED STATES DEPARTMENT OF THE INTERIOR
BUREAU OF RECLAMATION

USBR 7230-89

PROCEDURE FOR

DETERMINING UNIT WEIGHT AND MOISTURE CONTENT OF SOIL IN-PLACE - NUCLEAR MOISTURE-DENSITY GAUGE

INTRODUCTION

This procedure is under the jurisdiction of the Geotechnical Services Branch, code D-3760, Research and Laboratory Services Division, Denver Office, Denver, Colorado. The procedure is issued under the fixed designation USBR 7230. The number immediately following the designation indicates the year of acceptance or the year of last revision.

This procedure is similar to ASTM D 2922 and D 3017 except for the following: (a) the determination of moisture and wet density have been combined into one designation since both determinations are made by one instrument and are performed during the same operation, (b) detailed procedures and requirements for system specifications and establishing the calibration curves covered in ASTM D 2922 and D 3017 are omitted but referenced, and (c) the addition of a procedure for determining the unit weight of a control fraction—usually minus No. 4 (4.75-mm) or minus 3/4-inch (19-mm) sieve material—when material larger than the control size is present.

1. Scope

1.1 This designation outlines the procedure for determining the in-place wet unit weight and moisture content of soil by nuclear methods using a surface gauge.

NOTE 1.–The surface nuclear gauge measures wet density of soil and the mass of moisture present per unit volume of soil. The wet and dry unit weights must be calculated from these values. For this reason, and because of common usage, the nuclear equipment for this test will be referred to in this designation as the "nuclear moisture-density gauge." For brevity, in some cases, "gauge" will be used.

1.2 The unit weight methods cover determination of total or wet unit weight of soil and soil-aggregate in-place. Total or wet density is measured by attenuation of gamma rays through moist soil where the gamma source and/or gamma detector remain at or near the surface. The total or wet unit weight is computed from the density. The methods described are normally suitable to test depths of approximately 2 to 12 inches (50 to 300 mm), depending on test geometry used.

1.3 *Test methods*:

1.3.1 Two methods of measuring the in-place unit weight of total material are provided: (1) method A — backscatter and (2) method B — direct transmission.

1.3.2 In addition, method C describes how to determine the unit weight of a control fraction. If the in-place soil contains particles larger than the maximum particle size permitted in the laboratory unit weight tests, the soil is considered to consist of two fractions, or portions. The soil from the in-place unit weight test is physically divided into a control fraction and an oversize fraction based on a designated sieve size. The unit weight of the control fraction is calculated and compared with the unit weight established by standard laboratory test. Normally, the control fraction is the minus No. 4 (4.75-mm) or minus 3/4-inch (19-mm) sieve size material.

1.3.3 Method A or B is used when the in-place unit weight of total material is to be determined regardless of particle sizes. If oversize is not present, the in-place unit weight of total material—as determined using a nuclear gauge—can be directly compared to the laboratory unit weight.

1.3.4 Method C is used when the soil being tested contains 3 percent or more oversize.

1.4 The moisture method covers determination of the mass of water present in a unit volume of soil and soil-aggregate in-place, by moderating or slowing fast neutrons where the neutron source and the neutron detector both remain at the surface. The mass of water is used to compute the moisture content. The moisture method is included in each of the unit weight methods.

1.5 The gauge may be operated only by, or under the direction of someone who has been trained and certified to operate the gauge.

1.6 Do not use this procedure to determine the density of organic soils; i.e., classification OL, OH, and Pt.

1.7 The relationship between density (or moisture in terms of mass of water) and the nuclear count rate is determined by correlation tests on materials at known average values of density and moisture content and furnished as calibration curves by the manufacturer for each individual gauge. These curves may not be applicable for all soils because of differences in chemical composition.

1.8 Test results also may be influenced by surrounding objects. For this reason, tests performed in test pits, trenches, or within 10 feet (3 m) of buildings or other objects of densities substantially different than the soil being tested should be adjusted in accordance with procedures specified in the manufacturer's operation manual.

1.9 *Limitation on Surface Irregularities*:

1.9.1 *Backscatter Method.*–The maximum void or gap in the surface to be tested shall not exceed 1/8-inch (3-mm) deep. When gaps are filled (see subpar. 12.4.3), the total area filled shall not exceed 10 percent of the bottom area of the gauge.

1.9.2 *Direct Transmission Method.*–The maximum void or gap in the surface to be tested shall not exceed 1/8-inch (3-mm) deep.

2. Auxiliary Tests

2.1 Depending on the accuracy required, the moisture content of the soil may need to be determined in accordance with USBR 5300 to calculate dry unit weight. For method C, the bulk specific gravity of any oversize material must be determined in accordance with USBR 5320 to calculate the volume of oversize material removed from the test hole.

3. Applicable Documents

3.1 *USBR Procedures*:

USBR 3900 Standard Definitions of Terms and Symbols Relating to Soil Mechanics
USBR 5300 Determining Moisture Content of Soil and Rock by the Oven Method
USBR 5320 Determining Specific Gravity of Soils
USBR 5500 Performing Laboratory Compaction of Soils — 5.5 lbm Rammer and 18-in Drop
USBR 7205 Determining Unit Weight of Soils In-Place by the Sand-Cone Method
USBR 7206 Determining Unit Weight of Soils In-Place by the Rubber Balloon Method
USBR 7240 Performing Rapid Method of Construction Control

3.2 *ASTM Standards*:

D 2922 Test Methods for Density of Soil and Soil-Aggregate In-Place by Nuclear Methods (Shallow Depth)
D 3017 Test Method for Moisture Content of Soil and Soil-Aggregate In-Place by Nuclear Methods (Shallow Depth)

4. Summary of Method

4.1 Prior to obtaining test counts, the nuclear moisture-density gauge is standardized for the effects of surrounding natural radiation by obtaining standard counts on a reference standard for density and moisture. All future test counts in a testing session are divided by the standard count to produce a count ratio. The gauge is calibrated to relate the density or moisture count ratio to wet density of soil or mass of water as appropriate.

4.2 The nuclear moisture-density gauge is placed on the surface of the soil or material to be tested. The gauge may be used in either the backscatter mode or direct transmission mode. In the backscatter mode, the radioactive source is situated at the ground surface; in the direct transmission mode, the radioactive source is lowered to a selected depth in a predriven hole in the soil. Radiation counters in the meter measure radiation passing through the soil.

4.2.1 The wet density is determined using a gamma radiation source and detector. The intensity of gamma radiation detected is dependent on the wet density of the soil. A test count for density is obtained and divided by the standard count to produce a density count ratio. The wet density is determined by the relationship of the density count ratio to wet mass of soil per unit volume of soil from a predetermined calibration curve.

4.2.2 The mass of water in the soil is determined using a fast neutron source and a thermal neutron detector. The intensity of slow or moderated neutrons detected is dependent upon the mass of water present in the soil. A test count for moisture is obtained and divided by the moisture standard count to yield a moisture count ratio. The mass of water is determined by the relationship of the moisture count ratio to mass of water per unit volume of soil from a predetermined calibration curve.

4.2.3 The moisture content is calculated from the mass of water and the mass of dry soil per unit volume. The dry unit weight is calculated from the wet density and moisture content.

5. Significance and Use

5.1 The procedures described are useful as rapid, nondestructive techniques for determining in-place wet unit weight and moisture content of soil (and soil-aggregate). The fundamental assumptions inherent in the nuclear density methods are that Compton scattering of gamma particles, in the material being tested, is the dominant interaction and that the material within the zone of influence for each test is homogeneous. The fundamental assumption inherent in the nuclear moisture method is that the hydrogen present in the material being tested is in the form of water.

5.2 This procedure may be used as the basis of acceptance for soils compacted to a specified unit weight or to a percentage of a maximum unit weight determined by a standard laboratory test method.

5.3 This procedure can be used to determine the in-place unit weight of natural inorganic soil deposits.

5.4 This procedure can be used to determine the unit weight of asphaltic concrete.

5.5 The moisture content determination is normally performed in conjunction with determination of wet unit weight. The unit weight determination can be performed separately if desired. For greater accuracy in determining the dry unit weight, the wet unit weight can be determined using one of the density methods and the moisture content determined by the oven-drying method in accordance with USBR 5300.

6. Terminology

6.1 Definitions are in accordance with USBR 3900.

6.2 Terms not included in USBR 3900 specific to this designation are:

6.2.1 *Control Fraction.*–The portion of a soil sample consisting of particles smaller than a designated sieve size. This fraction is used to compare in-place unit weight with

the standard laboratory unit weight. The control sieve size depends on the laboratory test used.

6.2.2 *Density Count Ratio.*–Ratio of the density test count to the density standard count.

6.2.3 *Density Standard Count.*–Density count obtained with the gauge seated on the reference standard (par. 7.2).

6.2.4 *Density Test Count.*–The number of radioactive counts accumulated by the gamma particle detector.

6.2.5 *Moisture Count Ratio.*–Ratio of the moisture test count to the moisture standard count.

6.2.6 *Moisture Standard Count.*–Moisture count obtained with the gauge seated on the reference standard.

6.2.7 *Moisture Test Count.*–The number of radioactive counts accumulated by the neutron detector.

6.2.8 *Oversize.*–The portion of a soil sample consisting of particles larger than a designated sieve size.

7. Apparatus

7.1 *Nuclear equipment.*–The apparatus may consist of items to perform Method A — Backscatter, Method B — Direct Transmission, or a combination of both. Most meters are designed to determine both density and moisture content. Items listed are common apparatuses except where noted as method A or method B only.

7.1.1 *Fast Neutron Source.*–A sealed mixture of radioactive material such as americium-beryllium or radium and beryllium.

7.1.2 *Gamma Detector.*–A device suitable for measuring the quantity of gamma particles arriving at the detector location.

7.1.3 *Gamma Source.*–An encapsulated and sealed gamma radiation source meeting the specific form requirements of Title 49 of the Code of Federal Regulations (U.S. Dept. of Transportation).

7.1.4 *Housing.*–The sources, detectors, readout device, etc., shall be in housings of rugged construction that are moisture and dust proof. For method B use, the housing shall contain a means of locating either the source or detector at a distance of 2 to 12 inches (50 to 300 mm) into a preformed hole in the material to be tested. The probe containing the source or detector shall be sufficiently rigid so as to maintain a constant distance along the measuring path length and also contain markings to indicate the depth to which the probe has been placed.

7.1.5 *Readout Device.*–A suitable scaler with a resolution and range to display counts over the range of unit weight and moisture for which the apparatus will be used. Usually, the scaler also contains other electronic devices and the necessary electrical power for operation.

7.1.6 *Slow Neutron Detector.*–Any type of slow neutron detector such as boron trifluoride or helium-3 proportional counter.

NOTE 2.–The gamma source, detector, readout device, and power supply may be housed separately or combined and integrated with a nuclear moisture-measuring system.

7.2 *Reference Standard.*–A block of hydrogenous material that isolates the instrument, provides a means for checking equipment operation, and establishes conditions for a reproducible count rate.

7.3 *Site-Preparation Equipment:*

7.3.1 Method A equipment shall include a flat plate straightedge, or other suitable tool to be used to level the test site to the required smoothness.

7.3.2 Method B equipment shall, in addition to that required in subparagraph 7.3.1, include a hole-forming device such as an auger or pin having a nominal diameter equal to or up to 1/8 inch (3 mm) larger than the source probe and a guide to ensure that the hole is perpendicular to the test site surface.

7.4 *Transport Case.*–Each system shall include a shipping and transport case to house the equipment and shall meet the U.S. Department of Transportation requirements in Title 49 of the Code of Federal Regulations. The exterior of the case shall contain all labels required by the regulations, and radiation levels shall meet the "Yellow II" standards.

8. Precautions

8.1 *Safety Precautions.*–This equipment uses radioactive materials which may be hazardous to the health of users, unless proper precautions are taken. Users of this equipment must be completely familiar with possible safety hazards and with all applicable government regulations and must possess a current NRC (Nuclear Regulatory Commission) license. Effective operator instruction, together with routine safety procedures such as source-leak tests, recording and evaluation of film badge data, etc., are an essential part of the operation of this equipment.

8.2 *Technical Precautions:*

8.2.1 Proper site preparation is important. Voids immediately beneath the gauge cause large unit weight or moisture content errors.

8.2.2 The operator shall become thoroughly familiar with the manufacturer's operating procedure for the particular gauge being used. In addition, different gauges may have various instructions—such as systems checks—that are not covered in this designation.

8.2.3 Operation of nuclear moisture-density gauges must be in accordance with conditions of the NRC license and the operations program contained in that license.

9. Calibration

9.1 There are four types of calibration related to a nuclear moisture-density gauge: (1) system verification, (2) factory calibration, (3) field calibration checks and adjustments, and (4) daily system standardization.

NOTE 3.–Only the latter two, field calibration adjustments and daily system standardization, are related to typical field use of the gauge.

9.2 System verification of established requirements for precision, chemical error, and surface roughness error is performed by the manufacturer of the gauge. The procedures and requirements must be in accordance with

ASTM D 2922 for the density determination and ASTM D 3017 for moisture determination.

9.3 The factory calibration curve for the gauge is performed by the manufacturer and data are furnished for each individual gauge. The factory calibration curve relates the appropriate count ratio to the density or moisture of the material being measured. The gauge is calibrated on five homogeneous blocks which represent infinite volumes to the gauge. These standard calibration blocks are used to measure the response of the gauge to densities in the range of 100 to 170 lbm/ft^3 (1600 to 2725 kg/m^3). A factory calibration curve is required for (a) backscatter mode (method A), (b) each depth interval in direct transmission mode (method B), and (c) the moisture method. The procedure for establishing the factory calibration curve must be in accordance with the laboratory method described in ASTM D 2922 for density and ASTM D 3017 for moisture. Factory calibration is recommended once every 3 years or more frequently for gauges in heavy use.

9.4 Field calibration checks for each nuclear moisture-density gauge must be performed at least once a year. These calibration checks, described in subparagraph 9.4.1, also are recommended when the gauge has been field repaired or when soil conditions have changed and the calibration is considered suspect.

9.4.1 Field calibration adjustments may be made when laboratory calibration facilities are not immediately available or when it becomes necessary to calibrate the gauge for materials that are chemically different than soils. A minimum of 10 field density determinations should be used for establishing calibration adjustment curves by the field method so that a range of densities and materials will be represented. The sand-cone method in accordance with USBR 7205 or the rubber-ballon method in accordance with USBR 7206 may be used to determine the wet densities of materials at carefully selected field sites. As an alternative, nuclear gauge data can be obtained on prepared containers of soil or soil-aggregate compacted to known densities. The containers must be sufficiently large to represent an infinite volume to the nuclear instrument (consult manufacturer's operation manual). Data from either of these methods may be used to establish calibration adjustment curves by fitting a least squares line to a plot of gauge density output to field or container density. It is more desirable to use the prepared container procedure and adjust and/or offset the factory calibration to fit the field data. Extreme care must be exercised in determination of wet density in either the field site or prepared container. Because of the variability and scatter inherent in field tests and container preparation and compaction, these methods are considered less accurate than techniques using calibration blocks (see subpar. 9.3).

NOTE 4.–Use of calibration blocks is advantageous because they are durable and provide stable density references. Blocks and prepared containers must be large enough not to change the observed count rate (or count ratio) if made larger in any dimension. Block dimensions of approximately 12 inches wide by 14 inches deep by 22 inches long (300- by 360- by 560-mm, respectively) have proven satisfactory for equipment now available. For calibration of backscatter density only, a depth of not less than 9 inches (230 mm) is adequate.

9.4.2 A minimum of 10 field density determinations must be used to compare with factory calibration data in order to justify adjusting the calibration. If each of the field tests varies by not more than 3 percent from the nuclear density and some of the field densities are greater than and some less than the nuclear density, adjustment of the calibration curve(s) is not necessary.

9.4.3 If all of the field tests are greater than or all are less than the nuclear density and the average of the differences exceeds 1 percent of the average field density, adjust each subsequent nuclear density by the average difference.

9.4.4 The average difference found in subparagraph 9.4.3 may be used to create an adjusted calibration curve. The adjusted calibration curve may be rotated about a zero point or uniformly offset from the original calibration curve.

9.4.5 Adjusted moisture calibration curves are established by determining the moisture count ratio of each of several samples of different known moisture contents, plotting the moisture count ratio versus each known moisture content, and placing a best-fit curve through the resulting points. The method and procedure used in establishing the adjusted curve must be the same as used for determining moisture content of the material to be tested. The moisture content of materials used to establish the adjusted calibration curve must vary through a range to include the moisture content of materials to be tested. The materials used for calibration must be of the uniform density as well as uniform moisture content.

NOTE 5.–Because of the effect of chemical composition on gauge readings, some calibration curves supplied with the gauge may not be applicable to all materials under test. Therefore, calibration curves must be checked, and adjusted if necessary. It may be desirable to develop calibration curves for soils identified as having a chemical effect on the gauge output.

NOTE 6.–The procedure described in subparagraphs 9.4.1 through 9.4.4 for checking the density calibration and the moisture calibration are not the same as described in ASTM D 2922 and D 3017. The ASTM procedure covers a range of unit weights to check widely varying values. The procedure described in subparagraph 9.4.1 covers only the ranges of unit weight and moisture content that normally would be encountered during typical use of the gauge.

NOTE 7.–Adjusting calibration curves is a complex task and should be attempted only by those knowledgeable in these methods. Most manufacturers either provide this service or offer assistance to the user.

9.5 The nuclear moisture-density gauge requires a daily setting of a standard count, and is referred to as "standardization".

9.5.1 All nuclear density gauges are subject to long-term aging of the radioactive sources, detectors, and electronic systems, which may change the relationship between count rate and density or moisture. To offset this

aging, all gauges are calibrated as a ratio of the test count to a standard count made on a reference standard. The standard counts should be in the same order of magnitude or higher than the range of test counts over the useful density (or moisture) range of the equipment.

9.5.2 Standardization of the gauge on the reference standard is required at the start of each day's use, and a permanent record of these data should be retained. An example format for recording the standard counts is shown on figure 1.

9.5.3 Since standardization is performed daily, it is considered part of the procedure and is described in paragraph 11.

10. Conditioning

10.1 Not applicable; special conditioning requirements are not needed for this procedure.

11. Procedure — Standardization

11.1 All data are to be recorded on the "Nuclear Moisture-Density Test Record" form as shown on figure 2 and on the permanent record of standard counts as given on figure 1.

11.2 Turn on the gauge, and allow for electronic stabilization of the gauge in accordance with the manufacturer's recommendations.

11.3 Obtain a standard count for density and a standard count for moisture in accordance with the manufacturer's instructions. This constitutes one standardization check. Record the readings on the test form (fig. 1).

11.4 If the standard count obtained is within the limits set by the following equation, the gauge is considered in satisfactory condition and may be used. If the standard count is outside the limits set by the equation, another standardization check should be made. If the second standardization check is within the limits, the gauge may be used; but if it also fails the test, the gauge should be checked as recommended by the manufacturer and the calibration checked or the gauge recalibrated.

$$N_s = N_o \pm 2.0\sqrt{\frac{N_o}{PC}} \qquad (1)$$

where:

N_s = value of current standard count (density, DS, or moisture, MS) on the reference standard

N_o = average of the past four values of N_s taken from prior standard counts

PC = amount of prescale applied to the detector counts prior to display. The manufacturer provides this value. If prescale is not built into the equipment the value is 1.

11.5 Values of N_s are used to determine the density and moisture count ratios for the current day's use of the equipment. If—for any reason—count ratios become suspect during the day's use, another standardization should be performed.

NOTE 8.–If the gauge is to be used either continuously or intermittently during the day, generally it is best to leave it in the "power on" or "standby" condition during the day to prevent having to repeat the standardization. Also, this provides more stable, consistent results. Most currently available gauges store the moisture and density standard counts in a computer memory that is erased when the gauge is turned off.

11.6 Perform the standard counts in accordance with the manufacturer's recommendations and away from other radioactive sources, large masses of metal, vertical objects, free water, or other items that can affect the gauge readings.

12. Procedure: Method A — Backscatter

12.1 All data are to be recorded on the "Nuclear Moisture-Density Test Record" form as shown on figure 2.

12.2 Standardize the gauge (par. 11).

12.3 Select a test location where the gauge, in test position, will be at least 9 inches (230 mm) away from any vertical projection.

12.4 Prepare the test site in the following manner.

12.4.1 Remove all loose and disturbed material and additional material—as necessary—to expose the top of the material to be tested.

12.4.2 Prepare a horizontal area by planing the area to a smooth condition so as to obtain maximum contact between the gauge and material being tested. The size of the area must be sufficient to accommodate the gauge in at least two different orientations (fig.3).

12.4.3 The maximum void beneath the gauge shall not exceed 1/8 inch (3 mm). Use native fines or fine sand to fill these voids, and smooth the surface with a rigid plate or other suitable tool.

12.4.3.1 Placement of the gauge on the surface of the material to be tested is critical to successful determination of unit weight. The optimum condition is total contact between the bottom surface of the gauge and the surface of the material being tested. This may not be possible in some cases. To correct surface irregularities, use native fines or fine sand as a filler. The depth of the filler should not exceed 1/8 inch (3 mm), and the total area filled should not exceed 10 percent of the bottom area of the gauge. Several trial seatings may be required to achieve these conditions.

12.5 Obtain one set of test counts as follows.

12.5.1 Seat the gauge firmly on the prepared surface, and record the orientation as 0°.

12.5.2 Obtain density test counts, and calculate the wet unit weight of the soil by one of the following methods.

12.5.2.1 Set and record the count times. Obtain and record two or more density test counts. Calculate and record the average density test count. Calculate and record the density count ratio as the ratio of the average density count to the density standard count. From the density count ratio and the factory calibration curves, determine the wet density, convert to wet unit weight and record.

12.5.2.2 For gauges that give a direct display of wet density, follow the manufacturer's procedure. Set and record the count time. Read and record the density test

7-2381 (12-86) Bureau of Reclamation	NUCLEAR MOISTURE-DENSITY GAUGE STANDARD COUNT RECORD	Designation USBR 7230-89
MANUFACTURER Example	GAUGE MODEL	GAUGE SERIAL NO.

PERFORMED BY	DATE	DENSITY STANDARD COUNT	MOISTURE STANDARD COUNT	TESTS PER DAY
A. Jones	5/26/89	3268	522	4
A. Jones	5/27/89	3273	518	6
A. Jones	5/30/89	3271	521	12
B. Smith	6/5/89	3269	520	2
B. Smith	6/9/89	3267	524	8

GPO 852-442

Figure 1. - Nuclear moisture-density gauge standard count record — example.

7-2370 (12-86)
Bureau of Reclamation

NUCLEAR MOISTURE-DENSITY TEST RECORD

Designation USBR 7230-89

PROJECT	FEATURE	FEATURE NO.	FILL	FILL NO.
Example				

TESTED BY	DATE	COMPUTED BY	DATE	CHECKED BY	DATE

MONTH	DAY	SHIFT A-DAY B-SWING C-GRAVE	TEST NO.	TYPE R-REG. C-CONG. D-DOUBT	STATUS A-ACC. R-REJ.	BORROW AREA NO.	STANDARD COMPACTION METHOD	SOIL CLASS.	STATION	OFFSET	ELEVATION

STANDARDIZATION

DENSITY STANDARD COUNT (DS)	3267
MOISTURE STANDARD COUNT (MS)	524

TEST COUNT DATA

COUNT TIME (min)	1*	1**		
PROBE DEPTH (in)	8	8		
ORIENTATION	0°	90°		

DENSITY TEST COUNT

	1231	1219		
	1237			
TOTAL	2468			
AVERAGE DENSITY TEST COUNT (DC)	1234			
DENSITY COUNT RATIO (CR_γ)	0.378			

MOISTURE TEST COUNT

	143	149		
	145			
TOTAL	288			
AVERAGE MOISTURE TEST COUNT (MC)	144			
MOISTURE COUNT RATIO (CR_m)	0.275			

UNIT WEIGHT CALCULATIONS

(WD) WET UNIT WEIGHT (lbf/ft^3)	130.7	130.9		
(M) WEIGHT OF WATER (lbf/ft^3)	13.8	14.5		
(DO) DRY UNIT WEIGHT (lbf/ft^3)	116.9	116.4		
(M%) MOISTURE CONTENT (%)	11.8	12.5		

REMARKS: * Column represents data taken for hand calculation using calibration tables provided with the Nuclear moisture - density gauge.

** Column represents data obtained from Nuclear moisture - density gauge with internal microprocessors.

AVERAGES

WET UNIT WEIGHT (lbf/ft^3)	130.8
DRY UNIT WEIGHT (lbf/ft^3)	116.7
MOISTURE CONTENT (%)	12.2

GPO 852 - 546

Figure 2. – Nuclear moisture-density test record — example.

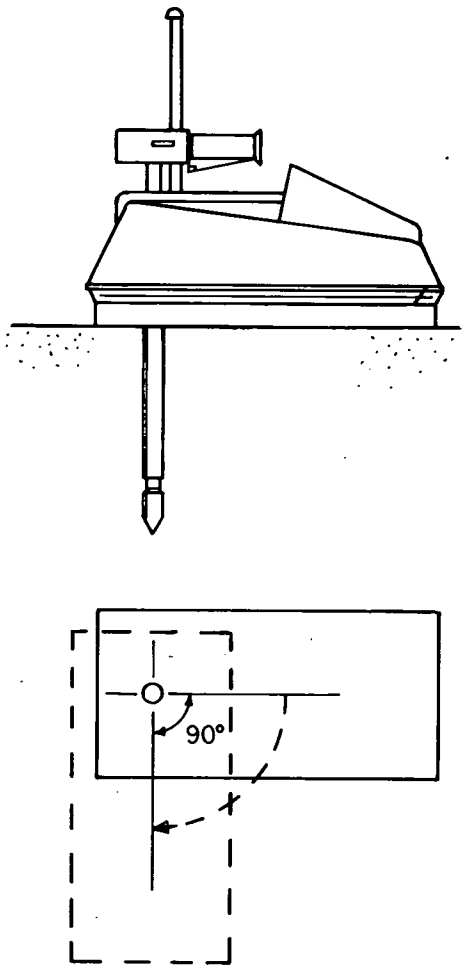

Figure 3. – Orientation of nuclear moisture-density gauge showing 90-degree rotation for second reading.

count, the wet density, and the gauge converted wet unit weight. Some direct display gauges require setting a depth switch to the BS position to indicate "backscatter" prior to reading the density display. Record BS in the "probe depth" block on the form.

12.5.3 Obtain and record the moisture test count, weight of water per unit volume of soil, and moisture content according to the manufacturer's procedure. Calculate or determine the moisture content by one of the following methods.

12.5.3.1 Set and record the count time. Obtain and record two or more moisture test counts. Calculate and record the average moisture test count. Calculate and record the moisture count ratio as the ratio of the average moisture count to the moisture standard count. From the moisture count ratio and the factory calibration curve, determine the weight of water per unit volume of soil and record.

12.5.3.2 For gauges that give a direct display of moisture, follow the manufacturer's procedure. Set and record the count time. Record the moisture test count and the weight of water per unit volume of soil.

12.5.4 Calculate the dry unit weight of soil by subtracting the weight of water per unit volume of soil from the wet unit weight. Direct display gauges display this value.

12.5.5 Calculate the moisture content, in percent, as the ratio of the weight of water per unit volume of soil to the calculated dry unit weight multiplied by 100. Direct display gauges display this value.

12.6 Obtain a second set of readings as follows.

12.6.1 Seat the gauge firmly in a position 90° from the orientation for the first set of readings and record the orientation (see fig. 3). If a 90° orientation is not possible, describe on report form exactly what was done.

NOTE 9.–Gauge rotation is performed to obtain an additional set of readings on a separate volume of soil without creating a requirement to prepare a new test site. Also, the rotation allows the operator to compare results of tests on two adjacent volumes of soil, which should be considered homogeneous. Unexpected voids or cobbles located in only one of the two settings would be readily detectable through comparison of readings.

12.6.2 Repeat procedures in subparagraphs 12.5.2 and 12.5.3.

12.7 If the wet unit weights or the weights of water per unit volume of soil of the two sets of readings are not within 1 lbf/ft³ rotate the gauge another 90° and obtain a third set of readings. Use the two values obtained that are within 1 lbf/ft³. If no two readings meet this criteria, disregard the test data from this site.

12.8 Calculate and record the average wet unit weight, average dry unit weight, and average moisture content.

12.9 Calculate the dry unit weight using either the weight of water per unit volume of soil from the nuclear moisture-density gauge or from a moisture content of the soil as determined in accordance with USBR 5300.

13. Procedure: Method B—Direct Transmission

13.1 All data are to be recorded on the "Nuclear Moisture-Density Test Record" form as shown on figure 2.

13.2 Standardize the gauge (par. 11).

13.3 Select a test location where the gauge, in test position, will be at least 9 inches (230 mm) away from any vertical projection.

13.4 Prepare the test site in the following manner.

13.4.1 Remove all loose and disturbed material and additional material—as necessary—to expose the top of the material to be tested.

13.4.2 Prepare a horizontal area by planing the area to a smooth condition so as to obtain maximum contact between the gauge and material being tested. The size of the area must be sufficient to accommodate the gauge in at least two different orientations (fig. 3).

13.4.3 The maximum void beneath the gauge shall not exceed 1/8 inch (3 mm). Use native fines or fine sand to fill these voids, and smooth the surface with a rigid plate or other suitable tool.

13.4.4 Make a hole perpendicular to the prepared surface using the guide and the hole-forming device. The hole shall be of such depth and alignment that insertion of the probe will not cause the gauge to tilt from the plane of the prepared area. The depth of the hole must

be at least 2 inches (50 mm) deeper than the depth to which the probe will be placed. The probe is normally inserted to a depth equal to twice the lift thickness. The guide shall be the same size as the base of the gauge with the hole in the same location on the guide as the probe on the gauge to assist in positioning the gauge. The corners of the guide are marked by scoring the surface of the soil.

13.4.4.1 For soils containing plus No. 4 (4.75-mm) sieve size particles (gravel), preparing the hole for the probe may cause disturbance in the soil. Look for any deflection of the hole-forming device as it is inserted into the soil. Excessive disturbance of the soil may affect the accuracy of the unit weight determination.

13.5 Obtain one set of test counts as follows.

13.5.1 Seat the gauge firmly on the soil surface, while carefully aligning it with the marks made in paragraph 13.4.4, so the probe is directly over the preformed hole. Record the orientation of the gauge as 0°.

13.5.2 Insert the probe in the hole to the selected test depth and record the depth.

13.5.3 Seat the gauge firmly by rotating it about the probe with a back-and-forth motion.

13.5.4 Pull gently on the gauge in the direction that will bring the probe against the side of the hole closest to the detector (or source) location in the gauge housing.

13.5.5 Obtain density test counts, and calculate the wet unit weight of soil by one of the following methods.

13.5.5.1 Set and record the count time. Obtain and record two or more density test counts. Calculate and record the average density test count. Calculate and record the density count ratio as the ratio of the average density count to the density standard count. From the density count ratio and the factory calibration curves, determine the wet density, convert to wet unit weight and record.

13.5.5.2 For gauges that give a direct display of wet density, follow the manufacturer's procedure. Set and record the count time. Record the density test count, and the wet density displayed by the gauge converted to unit weight. Some direct display gauges require setting a switch to the appropriate probe depth prior to reading the density display.

13.5.6 Obtain and record the moisture test count, weight of water per unit volume of soil, and moisture content according to the manufacturer's procedure. Calculate or determine the moisture content by one of the following methods.

13.5.6.1 Set and record the count time. Obtain and record two or more moisture test counts. Calculate and record the average moisture test count. Calculate and record the moisture count ratio as the ratio of the average moisture count to the moisture standard count. From the moisture count ratio and the factory calibration curve, determine the weight of water per unit volume of soil and record.

13.5.6.2 For gauges that give a direct display of moisture, follow the manufacturer's procedure. Set and record the count time. Record the moisture test count and the weight of water per unit volume of soil.

13.5.7 Calculate the dry unit weight of soil by subtracting the weight of water per unit volume of soil from the wet unit weight. Direct display gauges display this value.

13.5.8 Calculate the moisture content, in percent, as the ratio of the weight of water per unit volume of soil to the calculated dry unit weight multiplied by 100. Direct display gauges display this value.

13.6 Obtain a second set of readings as follows.

13.6.1 Rotate the gauge to a position 90° from the orientation for the first set of readings and record the orientation (see fig. 3). If a 90° orientation is not possible, describe on the report form exactly what was done.

13.6.2 Repeat the procedures in subparagraphs 13.5.1 through 13.5.8.

13.7 If the wet unit weights or the weights of water per unit volume of soil of the two sets of readings are not within 1 lbf/ft^3, obtain additional readings until two consecutive values are obtained that are within 1 lbf/ft^3. If this cannot be done, reject the test.

13.8 Calculate and record the average wet unit weight, average dry unit weight, and average moisture content.

13.9 Calculate the dry unit weight using either the weight of water per unit volume of soil from the nuclear moisture-density gauge or from a moisture content of the soil as determined in accordance with USBR 5300.

14. Procedure: Method C — Determining the Unit Weight of Control Fraction

14.1 When particles larger than the control fraction are present in the soil being tested, it is necessary to determine the unit weight of the control fraction of soil. This must be done when the in-place dry unit weight is to be compared to the laboratory maximum dry unit weight to calculate the percent compaction. To obtain the wet unit weight of the control fraction, the mass and volume of the oversize material are determined and subtracted from the total mass and total volume to obtain the mass and volume of the control fraction. From the mass and volume of the control fraction, the in-place dry unit weight can be calculated. A sample of the soil tested by the nuclear moisture-density gauge must be obtained.

14.1.1 Normally, the wet unit weight of the control fraction is determined and the dry unit weight calculated using the moisture content of the control fraction.

14.1.2 In addition, the moisture content of the oversize and the percentage of oversize are determined.

14.2 All data for determining the in-place unit weight of the control fraction are to be recorded on the "In-Place Unit Weight Test (Nuclear Moisture-Density Gauge)" form as shown on figure 4.

14.3 Obtain the in-place wet unit weight of total material by following the procedure for either method A or B.

14.4 Obtain a representative sample of the soil tested by the nuclear moisture-density gauge as follows.

14.4.1 Excavate soil in the area as illustrated on figure 5. The excavation should be from about 6 to 12 inches (150 to 300 mm) deep. About 1/4 ft^3 (7000 cm^3) of soil or about 30 lbm (14 kg) should be recovered.

14.4.1.1 If the direct transmission method (method B) was used, a pick may be inserted into the probe

7-2380 (11-86) Bureau of Reclamation	IN PLACE UNIT WEIGHT TEST (NUCLEAR MOISTURE-DENSITY GAUGE)	Designation USBR 7230-89

SAMPLE NO.	PROJECT	FEATURE	
Example			
TEST NO.	SOURCE OF MATERIAL		
LOCATION	OFFSET	ELEV.	ZONE
TESTED BY DATE	COMPUTED BY DATE	CHECKED BY	DATE

(1) Wet unit weight of total material (control fraction+oversize)	137.1	lbf/ft^3
(2) Wet mass of total material excavated + container	33.36	lbm
(3) Mass of container	3.28	lbm
(4) Wet mass of total material excavated = (2)-(3)	30.08	lbm
(5) Wet mass of oversize* + container	6.71	lbm
(6) Mass of container	2.06	lbm
(7) Wet mass of oversize* = (5)-(6)	4.65	lbm
(8) Wet mass of control fraction = (4)-(7)	25.43	lbm
(9) Mass of oversize in water (USBR 5320)	2.87	lbm
(10) Volume of oversize* = [(7)-(9)]/62.4**	0.0285	ft^3
(11) Sp.G. of oversize* = (7)/[(7)-(9)]	2.61	
(12) Volume of total material excavated*** = (4)/(1)	0.2194	ft^3
(13) Wet unit weight of control fraction*** = (8)/[(12)-(10)]	133.2	lbf/ft^3
(14) Moisture content of control fraction (USBR 5300)	12.1	%
(15) Dry unit weight of control fraction = (13/[1+((14)/100)]	118.8	lbf/ft^3
= lbf/ft^3 x 0.1571	18.7	kN/m^3
(16) Moisture content of oversize (USBR 5300)	5.4	%
(17) Dry mass of control fraction = (8)/[1+((14)/100)]	22.69	lbm
(18) Dry mass of oversize = (7)/[1+((16)/100)]	4.41	lbm
(19) Dry mass of total sample = (17)+(18)	27.10	lbm
(20) Percentage of oversize = [(18)/(19)] x 100	16.3	%
(21) Moisture content of total material	7.5	%
(22) Dry unit weight of total material = (1)/[1+((21)/100)]	127.5	lbf/ft^3
= lbf/ft^3 x 0.1571	20.0	kN/m^3

*Surface dried condition
**Unit weight of water in lbm/ft^3
***Implies lbm = lbf

REMARKS. Values recorded in lines (1) and (21) are obtained from method 'A' or method 'B' of USBR 7230.

GPO 852-441

Figure 4. – In place unit weight test (nuclear moisture-density gauge) — example.

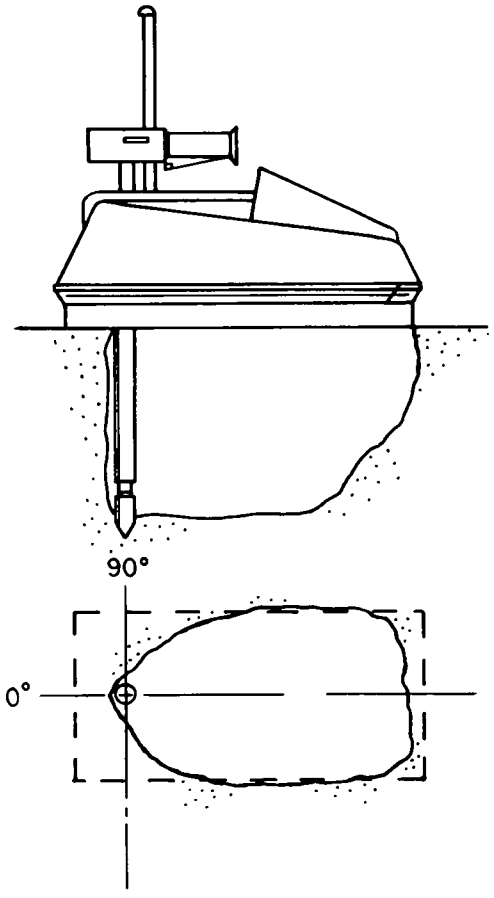

Figure 5. – Location for obtaining soil sample after completion of test readings.

hole and used to break away the soil in the required area.

14.4.2 Place the excavated soil in a moistureproof container.

14.5 Determine the wet mass of total material excavated and record to the nearest 0.01 lbm.

14.6 Separate the material into the control fraction and the oversize fraction using the designated sieve. This should be done rapidly to minimize loss of moisture. If the test is for construction control, place the control fraction in an airtight container for further tests (see subpar. 14.20).

14.7 Wash the oversize using a minimum amount of water, and blot to a surface-dry condition.

14.8 Determine the wet mass of oversize plus container of predetermined mass, and record to the nearest 0.01 lbm.

14.9 Calculate the wet mass of oversize and record to the nearest 0.01 lbm.

14.10 Calculate the wet mass of the control fraction and record to the nearest 0.01 lbm.

14.11 Determine the volume of oversize material to the nearest 0.0001 ft^3 by one of the following methods.

14.11.1 Calculate the volume based on wet mass of oversize in air and in water according to USBR 5320 except that 24-hour soaking may be waived.

14.11.1.1 Calculate the bulk specific gravity of the oversize and record to the nearest 0.01.

14.11.2 Determine the bulk specific gravity in accordance with USBR 5320 (except that 24-hour soaking may be waived), and calculate the volume using the bulk specific gravity of the oversize. If previous tests for bulk specific gravity have been performed and the value is relatively constant, a specific gravity may be assumed. Record the bulk specific gravity to the nearest 0.01.

14.12 Calculate the volume of total material excavated and record to the nearest 0.0001 ft^3.

14.13 Calculate the wet density of the control fraction to the nearest 0.1 lbm/ft^3.

14.13.1 Convert wet density to wet unit weight by changing lbm/ft^3 to lbf/ft^3 and record to the nearest 0.1 lbf/ft^3. (Assume 1 lbf = 1 lbm.)

14.14 Determine and record the moisture content of the control fraction in accordance with USBR 5300.

14.15 Calculate and record to the nearest 0.1 lbf/ft^3 the dry unit weight of the control fraction. If required, convert and record the dry unit weight to SI units.

14.16 Determine and record the moisture content of oversize in accordance with USBR 5300. If previous tests for moisture content of oversize from a particle source have been performed and the value is relatively constant, a moisture content may be assumed.

14.17 Determine the percentage of oversize.

14.17.1 Calculate the dry mass of the control fraction and record to the nearest 0.01 lbm.

14.17.2 Calculate the dry mass of oversize and record to the nearest 0.01 lbm.

14.17.3 Calculate the dry mass of the total sample and record to the nearest 0.01 lbm.

14.17.4 Calculate the percentage of oversize and record to the nearest 0.1 percent.

14.18 Record the moisture content of the total material determined in method A or B.

14.19 Calculate the dry unit weight of total material and record to the nearest 0.1 lbf/ft^3.

14.20 If percent compaction is required, the maximum unit weight must be determined in accordance with USBR 5500. If the D-value is required, it must be determined in accordance with USBR 7240. For either procedure, the soil excavated in subparagraph 14.4 is to be used to obtain the laboratory unit weight values.

15. Calculations — Methods A and B

15.1 State-of-the-art nuclear moisture-density gauges presently marketed have the ability to calculate the wet unit weight and weight of water per unit volume of soil by interpreting the calibration curves which are stored internally in the gauge memory. Many gauges also have the ability to calculate the dry unit weight, moisture content, and percent compaction if the maximum dry unit weight is entered into the nuclear moisture-density gauge memory. Refer to the manufacturer's operations manual for specific instruction.

15.2 The calculations for unit weight by either method A or B are identical—except that the proper depth or backscatter calibration must be used.

15.3 Calculate the density count ratio.

$$CR\gamma = \frac{DC}{DS} \quad (2)$$

where:
$CR\gamma$ = density count ratio
DC = average density test count
DS = density standard count

15.4 Calculate the moisture count ratio.

$$CR_m = \frac{MC}{MS} \quad (3)$$

where:
CR_m = moisture count ratio
MC = average moisture test count
MS = moisture standard count

15.5 Calculate the dry unit weight of soil (gauge-determined weight of water per unit volume).

$$\gamma_d = \gamma_w - \gamma_m \quad (4)$$

where:
γ_d = dry unit weight, lbf/ft³
γ_w = wet unit weight, lbf/ft³
γ_m = weight of water per unit volume, lbf/ft³

15.5.1 Nuclear moisture-density gauge readings are displayed in terms of density and pounds mass of water per unit volume of soil. In the procedure, these values are converted to unit weight by changing lbm/ft³ to lbf/ft³ and recorded to the nearest 0.1 lbf/ft³. (Assume 1 lbf = 1 lbm)

15.6 Determine moisture content (gauge determined weight of water per unit volume).

$$w = 100 \left(\frac{\gamma_m}{\gamma_d} \right) \quad (5)$$

where:
w = moisture content, %
100 = convert from decimal to percent

15.7 If the moisture content was determined using the oven method, calculate the dry unit weight of soil.

$$\gamma_d = \frac{\gamma_w}{1 + \left(\frac{w}{100} \right)} \quad (6)$$

where 100 converts percent to decimal.

16. Calculations — Method C

16.1 The following symbols are used in the calculations for method C of this designation.

m_2 = wet mass of total material excavated and container, lbm
m_3 = mass of container, lbm
m_4 = wet mass of total material excavated, lbm
m_5 = wet mass of oversize and container, lbm
m_6 = mass of container, lbm
m_7 = wet mass of oversize, lbm
m_8 = wet mass of control fraction, lbm
m_9 = mass of oversize in water (USBR 5320), lbm
m_{17} = dry mass of control fraction, lbm
m_{18} = dry mass of oversize, lbm
m_{19} = dry mass of total sample (control fraction plus oversize), lbm
V_o = volume of material excavated, ft³
V_{os} = volume of oversize, ft³
V_c = volume of control fraction, ft³
ρ_{wet} (c) = wet density of control fraction, lbm/ft³
ρ_{wet} = wet density of total material, lbm/ft³
γ_{wet} = wet unit weight of total material, lbf/ft³
γ_{wet} (c) = wet unit weight of control fraction, lbf/ft³
γ_d = dry unit weight of total material, lbf/ft³ or kN/m³
γ_d (c) = dry unit weight of control fraction, lbf/ft³ or kN/m³
G_m = bulk specific gravity of oversize
w = moisture content of excavated soil, %
w_f = moisture content of control fraction, %
w_{os} = moisture content of oversize, %

NOTE 10.–The subscripts, for the mass symbols, correspond to the line numbers of the "In-Place Unit Weight Test (Nuclear Mositure-Density Gauge)" form (fig. 4).

16.2 Calculate the wet mass of total material excavated.

$$m_4 = m_2 - m_3 \quad (7)$$

16.3 Calculate the wet mass of oversize.

$$m_7 = m_5 - m_6 \quad (8)$$

16.4 Calculate the wet mass of control fraction.

$$m_8 = m_4 - m_7 \quad (9)$$

16.5 Calculate the volume of oversize using subparagraph 16.5.1 or 16.5.2.

16.5.1 Calculate the volume of oversize based on the mass in air and mass in water method.

$$V_{os} = \frac{m_7 - m_9}{62.4} \quad (10)$$

where 62.4 equals density of water, lbm/ft³.

16.5.2 Calculate the volume of oversize based on bulk specific gravity as follows:

16.5.2.1 Calculate the bulk specific gravity (surface dry condition).

$$G_m = \frac{m_7}{m_7 - m_9} \quad (11)$$

16.5.2.2 Calculate the volume of oversize based on a known bulk specific gravity.

$$V_{os} = \frac{m_7}{62.4\ G_m} \quad (12)$$

16.6 Calculate the volume of total material excavated.

$$V_T = \frac{m_4}{\rho_{wet}} \quad (13)$$

16.7 Calculate the volume of the control fraction.

$$V_c = V_T - V_{os} \quad (14)$$

16.8 Calculate the wet density of the control fraction.

$$\rho_{wet}\,(c) = \frac{m_8}{V_c} \quad (15)$$

16.8.1 In the procedure, wet density is converted to wet unit weight by changing lbm/ft³ to lbf/ft³. (Assume 1 lbm = 1 lbf.)

16.9 Calculate the dry unit weight of the control fraction.

$$\gamma_d\,(c) = \frac{\gamma_{wet}\,(c)}{1 + \left(\frac{w_f}{100}\right)} \quad (16)$$

where 100 converts percent to decimal.

16.9.1 Convert dry unit weight in inch-pound units to SI units if required:

$$\text{Unit weight in kN/m}^3 = \frac{0.1571\ \text{kN/m}^3}{\text{lbf/ft}^3} \times (\text{unit weight, lbf/ft}^3)$$

16.10 Calculate the dry mass of control fraction.

$$m_{17} = \frac{m_8}{1 + \left(\frac{w_f}{100}\right)} \quad (17)$$

where 100 converts percent to decimal.

16.11 Calculate the dry mass of oversize.

$$m_{18} = \frac{m_7}{1 + \left(\frac{w_{os}}{100}\right)} \quad (18)$$

where 100 converts percent to decimal.

16.12 Calculate the dry mass of total sample.

$$m_{19} = m_{17} + m_{18} \quad (19)$$

16.13 Calculate the percentage of oversize.

$$\text{Percent oversize} = 100\left(\frac{m_{18}}{m_{19}}\right) \quad (20)$$

where 100 converts decimal to percent.

17. Report

17.1 The report is to consist of the following completed and checked forms (as applicable):

"Nuclear Moisture-Density Test Record" form (fig. 2).

"In-Place Unit Weight Test Record (Nuclear Moisture-Density Gauge) form if method C is used (fig. 4).

17.2 All calculations are to show a checkmark.

UNITED STATES DEPARTMENT OF THE INTERIOR
BUREAU OF RECLAMATION

USBR 7240-89

PROCEDURE FOR

PERFORMING RAPID METHOD OF CONSTRUCTION CONTROL

INTRODUCTION

This procedure is under the jurisdiction of the Geotechnical Services Branch, code D-3760, Research and Laboratory Services Division, Denver Office, Denver, Colorado. The procedure is issued under the fixed designation USBR 7240. The number immediately following the designation indicates the year of acceptance or the year of last revision.

1. Scope

1.1 This designation outlines the procedure for rapidly determining the percent compaction and the variation from optimum moisture content of an in-place cohesive soil.

1.2 The exact percent compaction and an approximation of the relationship between optimum moisture content and fill (in-place) moisture content can be determined without knowing the actual value of fill moisture content.

1.3 This procedure is normally performed on soils containing more than 15-percent fines. It also may be used, under certain circumstances, for soils containing 5 to 15 percent fines.

2. Auxiliary Tests

2.1 The in-place wet unit weight of the fill material (see note 1) is obtained in accordance with either USBR 7205, 7206, 7220, 7221, or 7230. The fill moisture content must be determined on the minus No. 4 fraction of the sample in accordance with USBR 5300 as part of completing the test for record purposes.

NOTE 1.–The term "fill" refers to mechanically placed deposits. The rapid method also can be used for natural deposits (see subpar. 5.2). For simplicity in this designation, reference is made only to testing fill material.

3. Applicable Documents

3.1 *USBR Procedures*:
USBR 3900 Standard Definitions of Terms and Symbols Relating to Soil Mechanics
USBR 5000 Determining Unified Soil Classification (Laboratory Method)
USBR 5005 Determining Unified Soil Classification (Visual Method)
USBR 5300 Determining Moisture Content of Soil and Rock by the Oven Method
USBR 5500 Performing Laboratory Compaction of Soils — 5.5-lbm Rammer and 18-in Drop
USBR 7205 Determining Unit Weight of Soils In-Place by the Sand Cone Method
USBR 7206 Determining Unit Weight of Soils In-Place by the Rubber Balloon Method
USBR 7220 Determining Unit Weight of Soils In-Place by the Sand Replacement Method in a Test Pit
USBR 7221 Determining Unit Weight of Soils In-Place by the Water Replacement Method in a Test Pit
USBR 7230 Determining Unit Weight and Moisture Content of Soil In-Place — Nuclear Moisture-Density Gauge
USBR 7250 Determination of Percent Relative Density

3.2 *ASTM Standard*:
E 11 Specification for Wire-Cloth Sieves for Testing Purposes

4. Summary of Method

4.1 A sample of fill material (see note 1) is obtained in conjunction with performing USBR 7205, 7206, 7220, 7221, or 7230. Soil specimens are compacted in accordance with USBR 5500. At least three specimens are compacted, the first at fill (in-place) moisture content and each of the remaining at different moisture contents. A parabolic curve is assumed, as defined by the three compaction points, and the peak point of the curve is determined mathematically. The ratio of in-place wet unit weight at fill moisture content to laboratory maximum wet unit weight is determined. An approximation of the difference between optimum moisture content and fill moisture content ($w_o - w_f$) is determined. After the actual fill moisture content is determined by ovendrying (usually the next day), the dry unit weights and optimum moisture content are calculated.

5. Significance and Use

5.1 The rapid method of construction control is performed to quickly evaluate percent compaction and variation from optimum moisture content of cohesive soils used in construction without knowing the value of fill moisture content at the time of the test.

5.1.1 Test results are used to determine if the compacted fill material meets specified compaction and moisture control values.

5.1.2 Test results usually are determined within about an hour from the time the soil sample is obtained.

5.1.3 Test results obtained for construction control purposes are used later to obtain exact values of dry unit weight and moisture content of the compacted fill.

5.2 The method can be used also for foundation or borrow area material to compare in-place dry unit weight and moisture content to laboratory maximum dry unit weight and optimum moisture content.

5.3 The compaction characteristics of soils vary depending upon the gradation of the soil and the cohesiveness of any fines. Generally, the laboratory compaction test is most applicable for soils containing more than 15-percent fines. For construction control of these soils, percent compaction is used to determine the adequacy of compaction. For soils containing less than 5-percent fines, the minimum and maximum index unit weight tests are used to evaluate the compaction characteristics. For construction control of these soils, percent relative density is used to determine the adequacy of compaction.

Soils containing 5 to 15 percent fines may need to be tested by both the laboratory compaction test and the combination of the minimum-maximum index unit weight tests to conclude which is more appropriate. Whether percent compaction or percent relative density is used for construction control depends on the test results and how the soil is to be used. See USBR 7250 or 7255 (app. X1) for further discussion.

6. Terminology

6.1 Definitions are in accordance with USBR 3900. Terms of particular significance are:

6.1.1 *Compaction Curve.*–The curve showing the relationship between the dry unit weight and the moisture content of a soil for a given compactive effort (ASTM definition).

6.1.2 *Fill.*–Manmade deposits of natural soils or rock products and waste materials designed and installed in such a manner as to provide drainage, yet prevent the movement of soil particles due to flowing water (ASTM).

6.1.3 *Maximum Unit Weight* (γ_{max}).–The dry unit weight defined by the peak of a compaction curve.

6.1.4 *Optimum Moisture Content* (w_o, %).–The moisture content at which a soil can be compacted to the maximum dry unit weight by a given compactive effort (ASTM).

6.1.5 *Percent Compaction* (%).–The ratio, expressed as a percentage, of: (1) dry unit weight of a soil, to (2) maximum dry unit weight obtained in a laboratory compaction test (ASTM).

6.1.6 *Wet Unit Weight* (γ_{wet}).–The unit weight of solids plus water per unit volume, irrespective of the degree of saturation.

6.2 Terms not included in USBR 3900 specific to this designation are:

6.2.1 *Added Water* (z).–The amount of water, expressed as a percentage, which is added to 7.5 lbm of wet soil before compacting a specimen in the rapid method of construction control. If the moisture content of the wet soil is decreased, the amount of "added water" is a negative number and is referred to as "minus added water" (i.e., –2.0 %).

6.2.2 *C-Value.*–The ratio, expressed as a percentage, of (1) in-place wet unit weight at fill moisture content to (2) the wet unit weight of a laboratory-compacted specimen prepared at fill moisture content as determined by the rapid method of construction control. The C-value is a comparison of compactive effort of field compaction equipment to standard laboratory compactive effort.

6.2.3 *Compaction Curve at Fill Moisture Content.*–A plot showing the relation between wet unit weight at fill moisture content (converted wet unit weight) and the percent of "added water."

6.2.4 *Converted Wet Unit Weight,* γ_{wet_c}.–The unit weight of a compacted specimen after being converted, by correcting for the amount of "added water," to the wet unit weight at fill moisture content.

6.2.5 *D-Value.*–The ratio, expressed as a percentage, of (1) in-place wet unit weight at fill moisture content to (2) laboratory maximum wet unit weight as determined from a compaction curve constructed at fill moisture content as determined by the rapid method of construction control. The D-value is the rapid method equivalent of percent compaction.

6.2.6 *Fill Moisture Content,* w_f.–Moisture content of the minus No. 4 fraction of in-place soil.

6.2.7 *Fill Wet Unit Weight,* γ_{wet_f}.–The wet unit weight as determined from an in-place unit weight test.

6.2.8 *Maximum Wet Unit Weight at Fill Moisture Content,* $\gamma_{max_{wf}}$.–The wet unit weight defined by the peak of the laboratory compaction curve at fill moisture content.

7. Interferences

7.1 The moisture adjustment (red line correction) values were determined based on average unit weight and optimum moisture content values of a large number of soil specimens. For soils having properties significantly different, the moisture adjustment values may not be applicable. If this is the case, new adjustment values must be determined for the specific soil. (See Engineering Monograph No. 26 [1][1] or contact the Bureau's Denver Office for more information.)

7.2 For samples significantly dry or wet of their optimum moisture content (+6.0%, –4.0%), the w_o–w_f values are less accurate.

8. Apparatus

8.1 *General Apparatus*:

8.1.1 *Balance or Scale.*–A typical balance or scale used for this designation must be readable to 0.01 lbm and have a capacity of about 50 lbm.

8.1.2 *Graduated Cylinder.*–250-mL capacity, graduated to 2.0 mL.

8.1.3 *Graduated Cylinder.*–100-mL capacity, graduated to 1.0 mL.

8.1.4 *Sieve.*–U.S.A. Standard series No. 4 sieve with stand, conforming to the requirements of ASTM E 11.

8.2 *Equipment Unique to This Procedure*:

8.2.1 *Compaction Device.*–A device with a 5.5-lbm rammer calibrated to achieve an 18.0-inch drop, repeated

[1] Number in brackets refers to the reference.

25 times. The device includes a 1/20-ft³ mold with base plate. This apparatus should be identical to that used for USBR 5500. (See USBR 5500 for specific information.)

8.2.2 *Extruder for Compaction Specimen.*–A mechanical device for removing a compacted soil specimen from a compaction mold.

8.2.3 *Mixer.*–Electric, bench, 3-speed, 1/3-horsepower, 60-cycle, 115-volt motor.

8.2.4 *Fan.*–Electric or other drying device.

8.2.5 *Straightedge.*–A stiff metal straightedge of any convenient length greater than 5 inches. The scraping edge must be beveled if it is thicker than 1/8 inch.

8.3 *Miscellaneous Equipment.*–Brushes, knife, mixing pans, scoop, etc., for mixing or trimming soil specimens; bucket with lid or other suitable container for retaining the test sample.

9. Reagents and Materials

9.1 Tapwater that is free of acids, alkalies, or oils, and is suitable for drinking should be used for wetting the soil prior to compaction.

10. Precautions

10.1 *Safety Precautions*:

10.1.1 This designation may involve hazardous materials, operations, and equipment.

10.1.2 Do not place hands near the top of the mold when any mechanical compaction device is in operation.

10.1.3 Ensure that the switch is in the "off" position while any mechanical compaction device is not in operation.

10.2 *Technical Precautions.*–The test specimen should be prepared and compacted as quickly as possible to minimize moisture loss.

11. Sampling, Test Specimens, and Test Units

11.1 *Sample Preparation.*–The soil used in this designation is obtained as result of an in-place unit weight test, and preparation of the sample is discussed under appropriate procedure paragraphs.

12. Calibration and Standardization

12.1 Verify that equipment is currently calibrated in accordance with the applicable calibration procedure. If the calibration is not current, perform the calibrations before using the equipment for this procedure.

13. Conditioning

13.1 If the test is not performed immediately, store the sample in a moistureproof container to prevent loss of moisture.

14. Procedure and Calculations — Obtain In-Place Unit Weight

NOTE 2.–The procedure for performing this test is divided into five sections as follows:

- Obtain in-place unit weight
- Compact specimens and obtain compaction curve
- Determine maximum point from compaction curve and $w_o - w_f$
- Determine D- and C-values
- Complete test for record

NOTE 3.–Since calculations are such an integral part of the procedure, the paragraphs on procedure and calculations are combined.

14.1 All data are to be recorded on the "Rapid Method Test Record — In-Place Unit Weight" form as shown on figure 1.

14.2 Perform the test for determining in-place unit weight in accordance with USBR 7205, 7206, 7220, 7221, or 7230. If the soil being tested contains gravel, perform the test in accordance with method B of each designation. Method B pertains to obtaining the unit weight of a control fraction of the soil being tested. The control fraction for performing the rapid method test is the minus No. 4 sieve size material.

14.2.1 If the in-place unit weight is obtained using USBR 7230 (nuclear method), a sample of the soil must be obtained in accordance with that designation.

14.3 A minimum soil sample of 23 lbm of minus No. 4 sieve size material is required for this test. This is sufficient material to prepare three compaction specimens. The soil sample is the minus No. 4 material obtained from the soil excavated to determine the in-place unit weight (or from subpar. 14.2.1 for the nuclear method).

14.3.1 If the soil contains a significant amount of plus No. 4 sieve size material, ensure that enough minus No. 4 sieve size material is obtained from the excavation to meet the requirement of subparagraph 14.3.

14.3.2 If the soil to be tested appears to be very wet or dry of optimum moisture content (4 percentage points or more), additional compaction specimens will be necessary and each will require about 7.5 lbm of soil.

14.3.3 If sufficient material is not obtained from the in-place unit weight test excavation, obtain additional soil from around the excavation. The additional material must be representative of the soil tested for in-place unit weight.

14.3.3.1 If the in-place unit weight test is to represent the full depth of a compacted lift, obtain any additional material only from the compacted lift being tested.

14.3.3.2 If the excavation for the in-place unit weight test has been contaminated with sand or has been wetted (as from the sand cone or water replacement methods), the additional material must be obtained by excavating nonaffected soil as close as practical to the original excavation.

14.3.3.3 Every effort should be made to obtain enough material to perform the rapid method test; if enough soil is not available, reprocessing may be used as a last resort.

14.3.3.4 Reprocessed Soil:

14.3.3.4.1 Reprocessing of soil should only take place when a limited amount of soil is available.

7-2092A (12-86)
Bureau of Reclamation

RAPID METHOD TEST RECORD
IN-PLACE UNIT WEIGHT

Designation USBR 7240- 89

PROJECT Example FEATURE Example NO. 13 FILL Zone 1A NO. 3

TESTED BY _____ DATE _____ COMPUTED BY _____ DATE _____ CHECKED BY _____ DATE _____

① MO.	DAY	SHIFT (A-DAY, B-SWING, C-GRAVE)	TEST NO.	TYPE (R=REG., C=CONG., D=DOUBT)	STATUS (A-ACC., R-REJ.)	BORR. AREA NO.	STD. COMP. METHOD	SOIL CLASS	STATION	OFFSET	ELEV.
4	8	A	3	R	A	2	SR	CL	677+10	10L	4712

IN-PLACE UNIT WEIGHT DATA

(1) MASS-SAND & CAN NO. ____ _____ lbm

(2) MASS-SAND RESIDUE & CAN _____ lbm

(3) MASS-SAND USED, (1)-(2) _____ lbm

(4) MASS-SAND IN TEMPLATE & CONE, NO. ____ _____ lbm
SEE BACK SIDE FOR FIELD DETERMINATION - USBR 7220

(5) MASS-SAND IN HOLE, (3)- (4) _____ lbm

(6) DENSITY OF CALIBRATED SAND _____ lbm/ft³

(7) VOL. OF HOLE, (5)/(6) _____ ft³

(8) TOTAL MASS WET MATERIAL & CAN _____ lbm

(9) MASS-CAN, NO. ____ _____ lbm

②

(10) TOTAL MASS WET MATERIAL (8)-(9) _____ lbm

* (11) WET UNIT WEIGHT, TOTAL MATERIAL (10)/(7) _____ lbf/ft³

(14) MASS-WET + NO. 4 _____ lbm

(17) SP. G., + NO. 4 _____

(21) MOISTURE CONTENT, + NO. 4 _____ %

(24) FILL UNIT WEIGHT, WET 120.0 DRY 99.2 lbf/ft³

(25) FILL MOISTURE CONTENT, w_f 21.0 %

(26) FIRST SPECIMEN UNIT WEIGHT, WET 120.0 DRY 99.2 lbf/ft³

(27) MAX. UNIT WT. AT FILL MOISTURE CONTENT WET 121.1 DRY 100.1 lbf/ft³

(28) OPT. MOISTURE CONTENT, w_o 22.4 %
$w_o = w_f + [z_m \times (1 + w_f/100)]$

(29) $w_o - w_f$ +1.4 dry %

(30) C VALUE (24)/(26) 100 %

(31) D VALUE (24)/(27) 99.1 %

④ COMMENTS - 18 SPACES AVAILABLE

③ RAPID METHOD CONTROL DATA

	FIRST SPECIMEN	SECOND SPECIMEN	
POINT NO.	A	B	C
ADDED WATER (%)	0.0	+ 2.0	+4.0
MASS-MOLD & WET SOIL (lbm)	13.95	14.10	13.95
MASS-MOLD (lbm) NO. 14	7.95	7.95	7.95
MASS-WET SOIL (lbm)	6.00	6.15	6.00
VOL. OF MOLD (ft³)	0.0500	0.0500	0.0500
*WET UNIT WEIGHT (lbf/ft³)	(26) 120.0	123.0	120.0
CONVERTED UNIT WEIGHT (lbf/ft³)		120.6	115.4

Y_1/Y_2 CHART (ONE PERCENT)

PT. 1		PT. 1	
PT. 3		PT. 2	
Y_1 (1-3)		Y_2 (1-2)	
z_m		Y_m	
RLC		PT. 1	
$w_o - w_f = z_m$ + RLC	(29)	MAX. WET UNIT WT.	(27)

Y_2/Y_4 CHART (TWO PERCENT)

PT. B	120.6	PT. C	115.4
PT. A	120.0	PT. A	120.0
Y_2 (B-A)	+0.6	Y_4 (C-A)	-4.6
x_m	+1.2	Y_m	+1.1
$z_m = x_m$ + ADDED WATER @ PT. A	+1.2		
RLC	+0.2	PT. A	120.0
$w_o - w_f = z_m$ + RLC	(29) +1.4	MAX. WET UNIT WT.	(27) 121.1

PLUS NO. 4 (OVERSIZE)

(12) MASS- WET + NO. 4 & PAN _____ lbm

(13) MASS-PAN, NO. ____ , ____ lbm

(14) MASS-WET + NO. 4 _____ lbm
(12)-(13)

(15) MASS + NO. 4 IN WATER _____ lbm

(16) VOL. OF + NO. 4 _____ ft³
[(14)-(15)] /62.4

(17) SP. G OF + NO. 4 _____
(14)/[(14)-(15)]

(18) MASS- DRY + NO. 4 & PAN _____ lbm

(19) MASS-PAN, NO. ____ , ____ lbm

(20) MASS-DRY + NO. 4 _____ lbm
(18)-(19)

(21) MOISTURE CONTENT + NO. 4 _____ %
[(14)-(20)] /(20) x 100

(22) VOL. OF -NO. 4 _____ ft³
(7)-(16)

(23) MASS-WET -NO. 4 _____ lbm
(10)-(14)

*(24) WET UNIT WT. _____ lbf/ft³
(23)/(22)

*ASSUME 1 lbf = 1 lbm

FILL MOISTURE CONTENT

DISH NO.	CL117
MASS-WET SOIL + DISH	420.0 g
MASS-DRY SOIL + DISH	380.1 g
MASS-DISH	190.4 g
MASS-WATER	39.9 g
MASS-DRY SOIL	189.7 g
MOISTURE CONTENT (25)	21.0 %

AUXILIARY TESTS
USBR 5300 - 89

IN PLACE UNIT WEIGHT PERFORMED IN ACCORDANCE WITH USBR 7205 - 89

+ # 4 SPECIFIC GRAVITY PERFORMED IN ACCORDANCE WITH USBR 5320 - 89

( ) STORED

Figure 1. - Rapid method test record — in-place unit weight — added water example.

14.3.3.4.2 If reprocessing is necessary, soil that was previously compacted for the first specimen—which is at fill moisture content—should be reprocessed through the No. 4 sieve and then mixed with as much of the original sample as is available.

14.3.3.4.3 The use of reprocessed soil must be noted in the Rapid Method Control Data section as shown on figure 1.

14.4 Pass the soil obtained from the in-place unit weight test through a No. 4 sieve. If Procedure B—in the respective procedure—of the in-place unit weight test (see subpar. 14.2) was used, this will already have been done.

14.5 Thoroughly mix the material passing the No. 4 sieve to ensure an even distribution of moisture throughout the soil. The mixing should be performed as quickly as practical to prevent moisture loss.

14.6 Keep the minus No. 4 material in a moistureproof container to prevent moisture loss.

15. Procedure and Calculations — Compact Specimens and Obtain Compaction Curve

15.1 All data for procedures discussed in paragraphs 15, 16, 17, and 18 are to be recorded on the "Rapid Method Test Record — In-Place Unit Weight" form as shown on figure 1. The data for paragraph 15 are recorded on that form in the Rapid Method Control Data section.

15.2 Determine and record the mass of the compaction mold to the nearest 0.01 lbm. Record the volume of the compaction mold to the nearest 0.0001 ft^3.

15.3 Prepare a specimen for compaction at fill moisture content. This specimen is referred to as the "first specimen," and the data are recorded under the column labeled *First specimen* (the column with 0.0 for *Added water*).

15.3.1 Assemble and secure the mold and collar to the baseplate.

15.3.2 Place approximately 2.0 to 2.5 lbm of soil into the mold and spread to a uniform thickness.

NOTE 4.-With experience, this may be judged from volume as related to amounts in a scoop or other device.

15.3.3 Compact the layer with 25 blows from a 5.5-lbm rammer dropped from a height of 18.0 inches. The blows should be distributed equally over the surface of the layer.

NOTE 5.-The method of compacting a specimen for a laboratory compaction curve described in this designation is identical to that used in USBR 5500.

15.3.4 Repeat the compaction process outlined in subparagraphs 15.3.2 and 15.3.3 until three layers of approximately equal thicknesses have been compacted. The third layer, when compacted, should extend into the collar about one-fourth inch, but not more than one-half inch. If, after the last layer is compacted, the specimen is too short or too long, it should be discarded and a new specimen compacted.

15.3.5 Remove the collar from the mold and, using a straightedge, trim the specimen flush with the top of the mold.

15.3.6 Remove the mold from the baseplate.

15.3.7 Determine and record the mass of the mold and wet soil (compacted specimen) to the nearest 0.01 lbm.

15.3.8 Extrude the specimen from the mold.

15.3.9 Calculate and record the mass of wet soil of the compacted specimen.

$$m_1 = m_2 - m_3 \quad (1)$$

where:

m_1 = mass of wet soil, lbm
m_2 = mass of mold and wet soil, lbm
m_3 = mass of mold, lbm

15.3.10 Calculate the wet density of the specimen.

$$\rho_{wet} = \frac{m_1}{V} \quad (2)$$

where:

ρ_{wet} = wet density of compacted specimen, lbm/ft^3
V = volume of mold, ft^3

15.3.10.1 Convert the wet density (ρ_{wet}) to wet unit weight (γ_{wet}) by changing lbm/ft^3 to lbf/ft^3 and record to the nearest 0.1 lbf/ft^3. For this application, a 1-pound mass is considered to be numerically equal to a 1-pound force.

15.3.11 The wet unit weight for the first specimen compacted is referred to as the "first specimen wet unit weight" or $\gamma_{wet_{first}}$. Record the value in the Rapid Method Control Data section and on line (26) of figure 1.

15.3.12 At this point, the C-value should be calculated (see subpar. 17.2).

The C-value is calculated before proceeding because, if it is less than the D-value required in the construction specification, the in-place unit weight has failed to meet unit weight specifications. The D-value obtained from the rapid method test is always equal to or less than the C-value.

15.3.13 Vertically cut approximately a 1.5-inch-square by 6-inch-long moisture content specimen from the center of the compacted specimen. The moisture specimen should be about 200 grams.

15.3.14 Determine the moisture content of the specimen in accordance with USBR 5300.

15.4 Prepare a second specimen for compaction with 2 percent "added water." This compaction specimen is referred to as the "second specimen." The data are recorded under the column labeled *Second specimen* (the column with +2.0 for "added water").

15.4.1 Place 7.5 lbm of soil from the original sample into a mixing pan.

15.4.2 Measure exactly 68 mL (0.15 lbm) of water. This amount of water will increase the moisture content of the soil about 2.0 percent. This is referred to as "2-percent added water."

15.4.3 Thoroughly mix the soil by hand or with a mechanical mixer while sprinkling the water onto the soil to ensure an even distribution of moisture throughout the material. The mixing should be performed as quickly as possible to prevent moisture loss. Cover the mixing pan with a plastic bag or other cover to prevent moisture loss.

15.4.4 Compact the specimen and calculate the mass of wet soil, the wet density, and the wet unit weight of the specimen according to subparagraphs 15.3.1 through 15.3.10.

15.4.5 Calculate and record the converted wet unit weight (unit weight at fill moisture) of the specimen.

$$\gamma_{wet_c} = \frac{\gamma_{wet}}{1 + \left(\frac{z}{100}\right)} \quad (3)$$

where:

γ_{wet_c} = converted wet unit weight of compacted specimen, lbf/ft³

γ_{wet} = wet unit weight of compacted specimen, lbf/ft³

z = amount of water added to 7.5 lbm of soil before compacting specimen, %

100 = convert from percent to decimal

15.5 Prepare a third compaction specimen. The data column used depends on whether water is added or subtracted.

15.5.1 Before the third specimen can be compacted, compare the wet unit weights of the first two compaction specimens. If the converted wet unit weight of the second specimen is greater than or equal to the wet unit weight of the first specimen, follow subparagraph 15.5.2. If the converted wet unit weight of the second specimen is less than the wet unit weight of the first specimen, follow subparagraph 15.5.4.

15.5.1.1 If the converted wet unit weight of the second specimen is less than the wet unit weight of the first specimen, and the difference is within 3 lbf/ft³, the requirement for drying the soil (subpar. 15.5.4) may be eliminated (see app. X1). The alternate procedure is referred to as the Y_1/Y_2 method, and if it is used, proceed to paragraph 17 after having performed the procedures in appendix X1.

15.5.2 Prepare a third specimen by adding water. The data are to be recorded in the adjacent column to the right of the "+2.0" column (see fig. 1).

15.5.2.1 Place 7.5 lbm of soil from the original sample into a mixing pan.

15.5.2.2 Measure 136 mL (0.30 lbm) of water. This amount will increase the moisture content of the soil about 4.0 percent. This is referred to as "4-percent added water" (+4.0).

15.5.2.3 Thoroughly mix the soil while sprinkling the water onto the soil. The mixing should be performed as quickly as possible to prevent moisture loss.

15.5.2.4 Compact the specimen and calculate the mass of wet soil, the wet density, and the wet unit weight of the specimen according to subparagraphs 15.3.1 through 15.3.10.

15.5.2.5 Calculate and record the converted wet unit weight according to subparagraph 15.4.5.

15.5.2.6 If the converted wet unit weight of the third specimen is less than or equal to that of the second specimen, proceed to paragraph 16. If the converted wet unit weight of the third specimen is greater than that of the second specimen, an additional specimen must be compacted according to subparagraph 15.5.3.

15.5.3. Prepare additional specimen(s) by adding water. The data are to be recorded in an available column and the *added water* row labeled accordingly (i.e., +6.0, +8.0, etc.).

15.5.3.1 Repeat subparagraph 15.5.2.1 through 15.5.2.5 except *increase* the amount of "added water" by 2.0 percent more than that of the previous specimen (i.e., +6.0%, +8.0%, etc.).

15.5.3.1.1 Before compacting material to which 6 percent or more water was added, the material should be rescreened through the No. 4 sieve. Rescreening breaks down any balls of soil and assists in even moisture distribution.

15.5.3.2 Repeat subparagraph 15.5.3.1 until the converted wet unit weight of the current specimen is less than or equal to the converted wet unit weight of the previous specimen. Proceed to paragraph 16.

15.5.4 Prepare a third specimen by subtracting water. The data are to be recorded in the column to the left of the *First specimen* column (see fig. 2)

15.5.4.1 Place 7.5 lbm of soil from the original sample into a mixing pan.

15.5.4.2 Dry the soil until a 0.15 lbm mass loss occurs without loss of soil. This *decreases* the moisture content of the soil by about 2.0 percent. This is referred to as "*minus* 2-percent added water" (-2.0).

NOTE 6.–The soil specimen may be dried fairly quickly by using a fan or other device to blow dry air across the pan of soil while slowly mixing the soil. In a humid climate, other methods to quickly dry the soil may be required.

15.5.4.3 Compact the specimen and calculate the mass of wet soil, the wet density, and the wet unit weight of the specimen according to subparagraphs 15.3.1 through 15.3.10.

15.5.4.4 Calculate and record the converted wet unit weight according to subparagraph 15.4.5. When the soil is dried back, the amount of "added water," z, used to calculate the converted wet unit weight is a negative number (i.e., $z = -2.0$ %).

15.5.4.5 If the converted wet unit weight of the third specimen is less than or equal to the wet unit weight of the first specimen, proceed to paragraph 16. If the converted wet unit weight of the third specimen is greater than the wet unit weight of the first specimen, an additional specimen must be compacted according to subparagraph 15.5.5.

7-2092A (12-86)
Bureau of Reclamation

RAPID METHOD TEST RECORD
IN-PLACE UNIT WEIGHT

Designation USBR 7240- 89

PROJECT Example FEATURE Example NO. 14 FILL Zone 1A NO. 2

TESTED BY _____ DATE _____ COMPUTED BY _____ DATE _____ CHECKED BY _____ DATE _____

① MO.	DAY	SHIFT (A-DAY B-SWING C-GRAVE)	TEST NO.	TYPE (R=REG. C=CONG. D=DOUBT)	STATUS (A-ACC. R-REJ.)	BORR. AREA NO.	STD. COMP. METHOD	SOIL CLASS	STATION	OFFSET	ELEV.
4	8	C	2	R	R	3	SR	CL-SC	2710+10	107L	2717

IN-PLACE UNIT WEIGHT DATA

(1) MASS-SAND & CAN NO. ____ _____ lbm
(2) MASS-SAND RESIDUE & CAN _____ lbm
(3) MASS-SAND USED, (1)-(2) _____ lbm
(4) MASS-SAND IN TEMPLATE & CONE, NO. ____ _____ lbm
SEE BACK SIDE FOR FIELD DETERMINATION - USBR 7220
(5) MASS-SAND IN HOLE, (3)- (4) _____ lbm
(6) DENSITY OF CALIBRATED SAND _____ lbm/ft³
(7) VOL. OF HOLE, (5)/(6) _____ ft³
(8) TOTAL MASS WET MATERIAL & CAN _____ lbm
(9) MASS-CAN, NO. ____ _____ lbm

②

(10) TOTAL MASS WET MATERIAL (8)-(9) _____ lbm
* (11) WET UNIT WEIGHT, TOTAL MATERIAL (10)/(7) _____ lbf/ft³
(14) MASS-WET + NO. 4 _____ lbm
(17) SP. G., + NO. 4 _____
(21) MOISTURE CONTENT, + NO. 4 _____ %
(24) FILL UNIT WEIGHT, WET 125.8 DRY 102.6 lbf/ft³
(25) FILL MOISTURE CONTENT, w_f 22.6 %
(26) FIRST SPECIMEN UNIT WEIGHT, WET 128.9 DRY 105.1 lbf/ft³
(27) MAX. UNIT WT. AT FILL MOISTURE CONTENT WET 129.2 DRY 105.4 lbf/ft³
(28) OPT. MOISTURE CONTENT, w_o 22.0 %
$w_o = w_f + [z_m \times (1 + w_f/100)]$
(29) $w_o - w_f$ -0.6 wet %
(30) C VALUE (24)/(26) 97.6 %
(31) D VALUE (24)/(27) 97.4 %

④ COMMENTS - 18 SPACES AVAILABLE

③ RAPID METHOD CONTROL DATA

		FIRST SPECIMEN	SECOND SPECIMEN	
POINT NO.		A	B	C
ADDED WATER (%)		-2.0	0.0	+ 2.0
MASS-MOLD & WET SOIL (lbm)		14.13	14.37	14.16
MASS-MOLD (lbm) NO. 15		7.94	7.94	7.94
MASS-WET SOIL (lbm)		6.19	6.43	6.22
VOL. OF MOLD (ft³)		0.0499	0.0499	0.0499
*WET UNIT WEIGHT (lbf/ft³)		124.0	(26) 128.9	124.6
CONVERTED UNIT WEIGHT (lbf/ft³)		126.6		122.2

Y_1/Y_2 CHART (ONE PERCENT)

PT. 1		PT. 1	
PT. 3		PT. 2	
Y_1 (1-3)		Y_2 (1-2)	
z_m		Y_m	
RLC		PT. 1	
$w_o - w_f = z_m$ + RLC	(29)	MAX. WET UNIT WT.	(27)

Y_2/Y_4 CHART (TWO PERCENT)

PT. B	128.9	PT. C	122.2
PT. A	126.6	PT. A	126.6
Y_2 (B A)	+2.3	Y_4 (C-A)	-4.4
x_m	1.5	Y_m	2.6
$z_m = x_m +$ ADDED WATER @ PT. A	-0.5		
RLC	-0.1	PT. A	126.6
$w_o - w_f = z_m$ + RLC	(29) -0.6	MAX. WET UNIT WT.	(27) 129.2

PLUS NO. 4 (OVERSIZE)

(12) MASS-WET + NO. 4 & PAN _____ lbm
(13) MASS-PAN, NO. ____ _____ lbm
(14) MASS-WET + NO. 4 (12)-(13) _____ lbm
(15) MASS + NO. 4 IN WATER _____ lbm
(16) VOL. OF + NO. 4 [(14)-(15)] /62.4 _____ ft³
(17) SP. G OF + NO. 4 (14)/[(14)-(15)] _____
(18) MASS- DRY + NO. 4 & PAN _____ lbm
(19) MASS-PAN, NO. ____ _____ lbm
(20) MASS-DRY + NO. 4 (18)-(19) _____ lbm
(21) MOISTURE CONTENT + NO. 4 [(14)-(20)]/(20) x 100 _____ %
(22) VOL. OF -NO. 4 (7)-(16) _____ ft³
(23) MASS-WET -NO. 4 (10)-(14) _____ lbm
*(24) WET UNIT WT. (23)/(22) _____ lbf/ft³

*ASSUME 1 lbf = 1 lbm

FILL MOISTURE CONTENT

DISH NO.	CL15
MASS-WET SOIL + DISH	410.5 g
MASS-DRY SOIL + DISH	370.2 g
MASS-DISH	191.7 g
MASS-WATER	40.3 g
MASS-DRY SOIL	178.5 g
MOISTURE CONTENT (25)	22.6 %

AUXILIARY TESTS
USBR 5300 - 89

IN PLACE UNIT WEIGHT PERFORMED IN ACCORDANCE WITH USBR 7205 - 89

+ # 4 SPECIFIC GRAVITY PERFORMED IN ACCORDANCE WITH USBR 5320 - 89

( ) STORED

Figure 2. - Rapid method test record — in-place unit weight — subtracted water example.

15.5.5 Prepare additional specimen(s) by subtracting water. The data are entered in an available column and the *added water* row labeled accordingly (i.e., -4.0, -6.0, etc.).

15.5.5.1 Repeat subparagraph 15.5.4.1 through 15.5.4.4 except *decrease* the amount of "added water" by 2.0 percent more than that of the previous specimen (i.e., -4.0%).

15.5.5.1.1 Before compacting material from which 4 percent or more water was subtracted, the material should be thoroughly mixed and rescreened through the No. 4 sieve, if necessary, to break down any balls of soil and to assist in even moisture distribution.

15.5.5.2 Repeat subparagraph 15.5.5.1 until the converted wet unit weight of the current specimen is less than or equal to the converted wet unit weight of the previous specimen. Proceed to paragraph 16.

16. Procedure and Calculations — Determine Maximum Point From Compaction Curve and w_o-w_f

16.1 Data for paragraph 16 are recorded in the section of the form titled "Y_2/Y_4 Chart."

16.2 The maximum point from the compaction curve at fill moisture content can be determined using either a mathematical or graphical method. The mathematical method can be performed using the calculation procedure described in this paragraph or by using a programmable pocket calculator. Available programs for pocket calculators are described in Technical Note No. 36 [2]; contact the Bureau's Denver Office for more information. If the specimens were compacted with unequal increments of "added water" (i.e., -1, 0, and +2% or 0, +2.3, and +4.2%), a programmable pocket calculator or the graphical method must be used. The graphical method is described in Engineering Monograph No. 26 [1]. Mathematical methods are preferred for determining w_o-w_f and the maximum point from the compaction curve at fill moisture content.

16.3 This procedure is referred to as the Y_2/Y_4 method for determining the maximum point from the compaction curve at fill moisture content.

16.3.1 This method can be used only if specimens were compacted with "added water" 2 percentage points apart. Refer to subparagraph 16.2 if specimens were compacted with unequal increments of "added water".

16.4 For simplicity of discussion in the remainder of this designation, all the compaction specimens are referred to as "converted" (converted to unit weight at fill moisture content) even though the first compaction specimen was compacted at fill moisture content and therefore was not "converted." Label the values from the three compaction specimens as either point *A*, *B*, or *C*, in order, starting with the specimen with the least amount of "added water." For ease of identification, values from the compaction specimens can be plotted as shown on figure 3. If more than three specimens were compacted:

- Select the specimen with the highest converted wet unit weight and label the specimen as point *B*
- Select the specimen which has 2 percent less "added water" than point *B* and label as point *A*
- Select the specimen which has 2 percent more "added water" than point *B* and label as point *C*
- Record the labels as the *Point No.* in the Rapid Method Control Data section

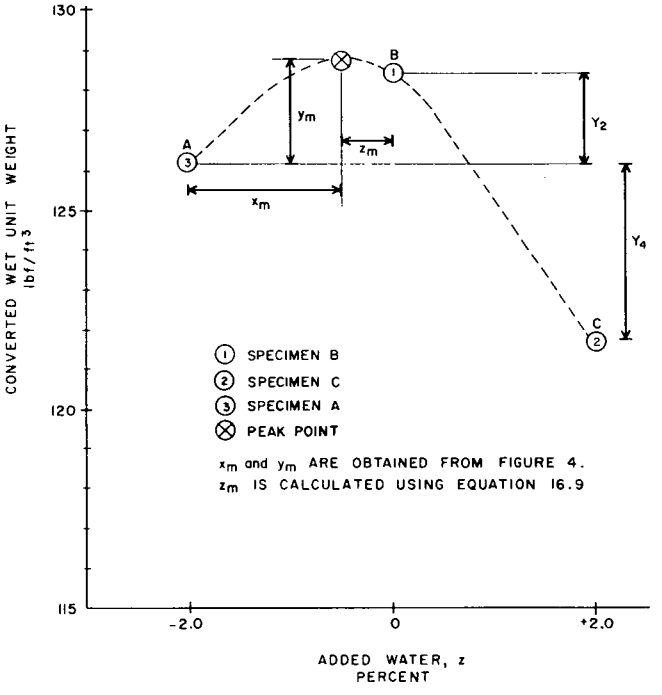

Figure 3. - Determining peak point of compaction curve, Y_2/Y_4 method.

In the "Y_2/Y_4 Chart" section of the form, record the converted wet unit weights for the three specimens in the boxes corresponding to "pt. *A*, pt. *B*, or pt. *C*."

NOTE 7.–The example calculations on figure 1 are for a sample to which water was added (i.e., +4.0%) to the third specimen. The example calculations on figure 2 are for a sample for which the soil for the third specimen was dried (i.e., -2.0%). The illustration on figure 3 is only an example. The location of the compaction curve at fill moisture content in relation to the "added water" axis can be different depending on the amount of "added water" used to obtain the compaction curve.

16.5 Calculate and record the value Y_2.

$$Y_2 = B - A \quad (4)$$

where:

B = converted wet unit weight of point *B*, lbf/ft³
A = converted wet unit weight of point *A*, lbf/ft³

16.6 Calculate and record the value Y_4.

$$Y_4 = C - A \quad (5)$$

where C equals converted wet unit weight of point C, lbf/ft³.

16.6.1 The Y_4 can be a negative number.

16.7 Determine and record the values x_m and y_m.

16.7.1 Using the table on figure 4, locate Y_2 on the ordinate (vertical) axis and Y_4 on the abscissa (horizontal) axis. Y_2 identifies a row of numbers on the table and Y_4 identifies a column of numbers on the table. The box where the row and column intersect defines x_m and y_m; x_m is the top number and y_m is the bottom number. Record the values x_m and y_m on the form in the "Y_2/Y_4 Chart" section (fig. 1).

NOTE 8.–The values give the distance horizontally, x_m, and vertically, y_m, from point A to the peak point of the curve (see fig. 3).

16.8 Calculate the maximum wet unit weight at fill moisture content.

$$\gamma_{max_{w_f}} = \gamma_{wet_c}(A) + y_m \quad (6)$$

where:

$\gamma_{max_{w_f}}$ = maximum wet unit weight at fill moisture content, lbf/ft³
$\gamma_{wet_c}(A)$ = converted wet unit weight of point A, lbf/ft³
y_m = the difference in converted wet unit weight between point A and the peak point of the curve

Record the value on the form in the "Y_2/Y_4 Chart" section and on line (27) of figure 1.

16.9 Calculate the value z_m.

$$z_m = \text{"added water" at point } A + x_m \quad (7)$$

where:

z_m = the difference in "added water" between the zero "added water" point and the peak point of the curve
x_m = the difference in "added water" between point A and the peak point of the curve

Record the value on the form in the "Y_2/Y_4 Chart" section (fig. 1).

16.10 Determine the RLC (red-line correction) using figure 5.

Note 9.–The RLC's are reproduced here as black lines. The lines are red on the original printed form. When water is added to the soil before compacting the specimen, the percentage of "added water" is calculated based on the mass of *wet* soil rather than the mass of the *dry* soil. (The actual moisture content is not known at the time.) So, 2 percent "added water" is only an approximation and an adjustment must be made to z_m to obtain the value $w_o - w_f$. Moisture adjustment values (red-line corrections) have been calculated to correct for this and are determined from the red lines on the graph on figure 5.

16.10.1 Plot a horizontal line through the value of γ_{max_f} on the ordinate (vertical) axis and plot a vertical line through the value of z_m on the abscissa (horizontal) axis. The intersection of these two lines determines the RLC. Select the closest red line to the intersection point; the number corresponding to this line is the RLC. Record the RLC value to the nearest 0.1 percent in the "Y_2/Y_4 Chart" section (fig. 1).

16.11 Calculate $w_o - w_f$.

$$w_o - w_f = z_m + \text{RLC} \quad (8)$$

where:

$w_o - w_f$ = approximation of the difference between optimum moisture content and fill moisture content, %
RLC = red-line correction

Record the value to the nearest 0.1 percent on the form in the "Y_2/Y_4 Chart" section and on line (29) of figure 1.

17. Procedure and Calculations — Determine D- and C-Values

17.1 Calculate and record the D-value in percent.

$$\text{D-value} = 100\left(\frac{\gamma_{wet_f}}{\gamma_{max_{w_f}}}\right) \quad (9)$$

where:

γ_{wet_f} = fill wet unit weight, lbf/ft³
$\gamma_{max_{w_f}}$ = maximum wet unit weight at fill moisture content, lbf/ft³
100 = convert from decimal to percent

17.2 Calculate and record the C-value in percent.

$$\text{C-value} = 100\left(\frac{\gamma_{wet_f}}{\gamma_{wet_{first}}}\right) \quad (10)$$

where:

γ_{wet_f} = fill wet unit weight, lbf/ft³
$\gamma_{wet_{first}}$ = first specimen wet unit weight, lbf/ft³

18. Procedure and Calculations — Complete Test for Record

18.1 The following calculations are made after the moisture content test (from subpar. 15.3.14) has been completed.

18.2 Calculate and record the fill dry unit weight.

$$\gamma_{d_f} = \frac{\gamma_{wet_f}}{1 + \left(\frac{w_f}{100}\right)} \quad (11)$$

where:

γ_{d_f} = fill dry unit weight (minus No. 4), lbf/ft³
w_f = fill moisture content, %
100 = convert from percent to decimal

18.3 Calculate and record maximum unit weight.

$$\gamma_{max} = \frac{\gamma_{max_{w_f}}}{1 + \left(\frac{w_f}{100}\right)} \quad (12)$$

where γ_{max} equals maximum unit weight, lbf/ft³.

18.4 Calculate and record the first specimen dry unit weight.

$$\gamma_{d_{first}} = \frac{\gamma_{wet_{first}}}{1 + \left(\frac{w_f}{100}\right)} \quad (13)$$

where $\gamma_{d_{first}}$ equals specimen dry unit weight, lbf/ft³.

18.5 Calculate and record the optimum moisture content.

$$w_o = w_f + z_m\left[1 + \left(\frac{w_f}{100}\right)\right] \quad (14)$$

where w_o equals optimum moisture content, %.

19. Report

19.1 The report is to consist of a completed and checked "Rapid Method Test Record — In-Place Unit Weight" form (fig. 1).

19.2 All calculations are to show a checkmark.

NOTE 10.–D- and C-values on the basis of dry unit weight after determining the fill moisture content may differ (±0.1 lbf/ft³) from the D- and C-values reported on a wet basis on the day of the test. This difference is due to the way the numbers are rounded. The D- and C-values reported on the day of the test are the basis for acceptance or rejection even though values on computer-generated reports may be slightly different.

20. References

[1] Hilf, Jack W., *A Rapid Method of Construction Control for Embankments of Cohesive Soil*, Engineering Monograph No. 26, Bureau of Reclamation, Denver, Colorado, 5th print., August 1981.

[2] *Pocket Calculator Programs to Assist with Rapid Compaction Control Test Calculations*, Technical Note No. 36, Bureau of Reclamation, Denver, Colorado, August 31, 1983.

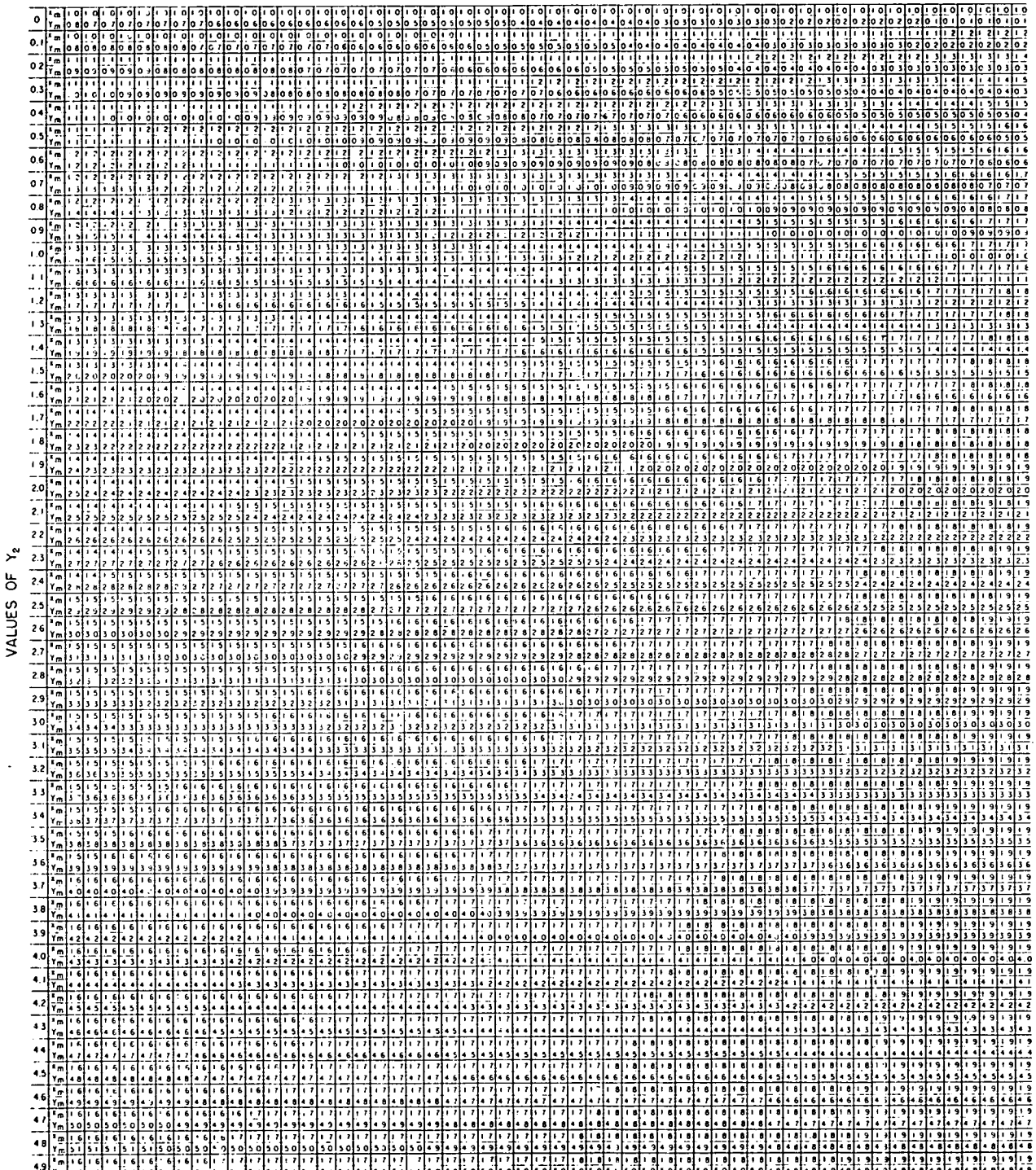

Figure 4. – Y_2/Y_4 Chart — rapid method of construction control.

RAPID METHOD OF CONSTRUCTION CONTROL

Tabulation of Coordinates of Maximum Unit Weight Point

Y_2/Y_4 Method

Values in the table are coordinates of the maximum unit weight point of the compaction curve from point A, the extreme left point. The upper value is X_m or the value in the direction of added water; the lower value is Y_m or the value in the direction of unit weight. Table can be used only if the 3 points A, B, and C are spaced 2% apart horizontally.

Y_2 is the unit weight of point B minus the unit weight of point A.

Y_4 is the unit weight of point C minus the unit weight of point A; Y_4 may be negative.

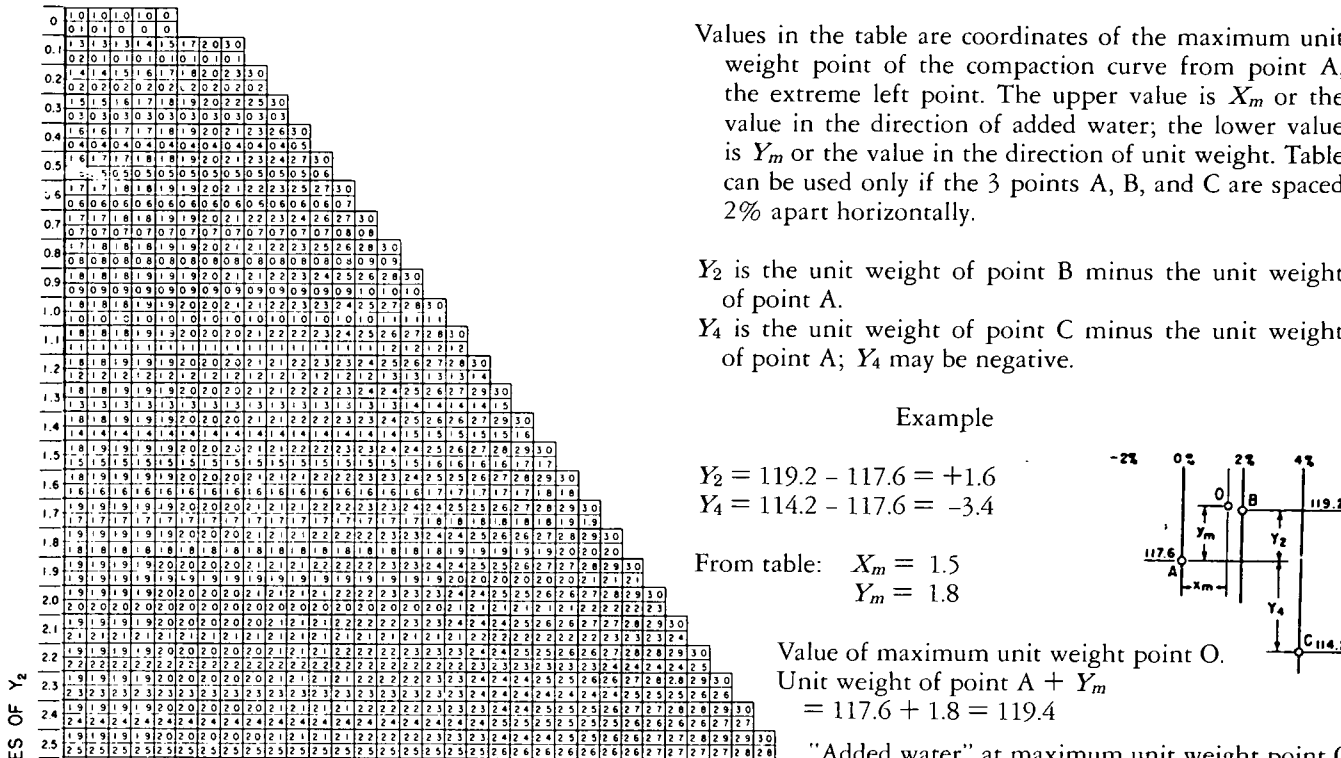

Example

$Y_2 = 119.2 - 117.6 = +1.6$
$Y_4 = 114.2 - 117.6 = -3.4$

From table: $X_m = 1.5$
$Y_m = 1.8$

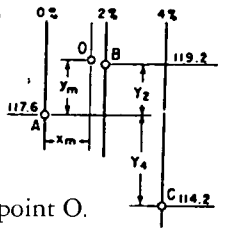

Value of maximum unit weight point O.
Unit weight of point A + Y_m
= 117.6 + 1.8 = 119.4

"Added water" at maximum unit weight point O.
Z_m = added water at point A + X_m
= 0 + 1.5 = 1.5%

Note

If point A were at - 2%,
Z_m would be -2.0 + 1.5 = -0.5%
then B would be at 0%
and C would be at +2%

Full size prints of 101-D-518 are available from Bureau of Reclamation, Denver Office, Denver Federal Center, Denver, Colo.

Figure 4. - Y_2/Y_4 Chart — rapid method of construction control - Continued.

7-1624B (3-86)
Bureau of Reclamation

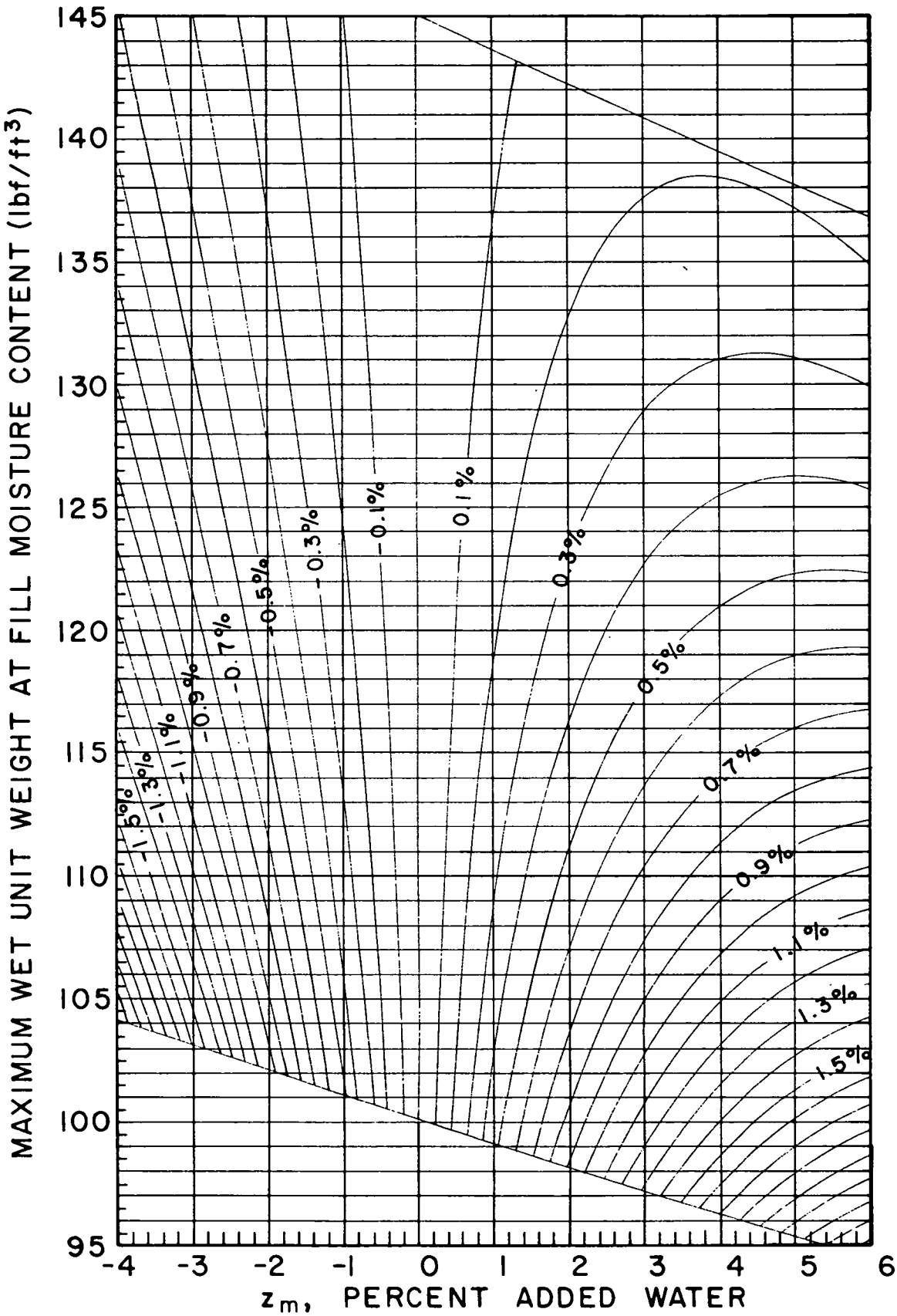

Figure 5. - Red-line correction — moisture adjustment values — $w_o - w_f = z_m + \text{RLC}$.

APPENDIX

X1. Y_1/Y_2 METHOD TO DETERMINE PEAK POINT OF COMPACTION CURVE

X1.1 Scope

X1.1.1 This appendix outlines an alternate procedure for preparing the third compaction specimen and determining the maximum point of the compaction curve at fill moisture content.

X1.1.2 This procedure eliminates the requirement for drying soils when fill moisture is near optimum moisture content.

X1.1.3 This procedure can be used only when the second compaction specimen has a converted wet unit weight lower than the wet unit weight of the first compaction specimen and the difference is 3 lbf/ft³ or less.

NOTE X1.1.–This method assumes that the two wet unit weights plot near the peak point of the parabola.

X1.2 Procedure and Calculations — Obtain Compaction Curve

X1.2.1 Prepare the third specimen by adding 1 percent water. The data are to be recorded in the adjacent column to the right of the "+2.0" column. A value of "+1.0" should be entered on the line for "added water."

X1.2.1.1 Place 7.5 lbm of soil from the original sample into a mixing pan.

X1.2.1.2 Measure 34 mL (0.08 lbm) of water. This amount of water will increase the moisture content of the soil by about 1.0 percent. This is referred to as "1-percent added water," (+1.0).

X1.2.1.3 Thoroughly mix the soil by hand or with a mechanical mixer while sprinkling the water onto the soil. The mixing should be performed as quickly as possible to prevent moisture loss.

X1.2.1.4 Compact the specimen, and calculate the mass of wet soil, the wet density, and the wet unit weight of the specimen according to subparagraphs 15.3.1 through 15.3.10.

X1.2.1.5 Calculate and record the converted wet unit weight according to subparagraph 15.4.5.

X1.3 Procedure and Calculations — Determine Maximum Unit Weight From Compaction Curve and $w_O - w_f$

X1.3.1 This procedure is referred to as the Y_1/Y_2 method for determining the maximum unit weight from the compaction curve at fill moisture content. Data for paragraph X1.3 are recorded in the section of the form titled "Y_1/Y_2 Chart" (fig. X1.1). The maximum point of the compaction curve at fill moisture content can be determined using either a mathematical or graphical method, as is discussed in subparagraph 16.2.

X1.3.2 For simplicity of discussion in the remainder of this designation, all the compaction specimens are referred to as "converted" (converted to unit weight at fill moisture content) even though the first compaction specimen was compacted at fill moisture content and therefore was not "converted." Label the values from the three compaction specimens as either point 1, 2, or 3 in the order in which the specimens were compacted. Record the labels as "Point No." in the Rapid Method Control Data section (see fig. X1.1). For ease of identification, values from the compaction specimens can be plotted as shown on figure X1.2. In the "Y_1/Y_2 Chart" section, record the converted wet unit weight values for the three specimens in the boxes corresponding to "pt. 1, pt. 2, or pt. 3."

X1.3.3 Calculate and record the value Y_1.

$$Y_1 = (1) - (3) \qquad \text{(X1)}$$

where:

(1) = converted wet unit weight of point 1, lbf/ft³
(3) = converted wet unit weight of point 3, lbf/ft³

X1.3.4 Calculate and record the value Y_2.

$$Y_2 = (1) - (2) \qquad \text{(X2)}$$

where (2) equals converted wet unit weight of point 2, lbf/ft³.

X1.3.5 Determine and record the values z_m and y_m.

X1.3.5.1 Using the table on figure X1.3 locate Y_2 on the ordinate (vertical) axis and Y_1 on the abscissa (horizontal) axis. Y_2 identifies a row of numbers on the table and Y_1 identifies a column of numbers on the table. The box where the row and column intersect defines z_m and y_m; z_m is the top number and y_m is the bottom number. Record the values of z_m and y_m on the form in the "Y_1/Y_2 Chart" section (fig. X1.1).

NOTE X1.2.–The values give the distance horizontally, z_m, and vertically, y_m, from point 1 to the peak point of the curve (see fig. X1.2).

X1.3.6 Calculate the ratio Y_1/Y_2. If the ratio Y_1/Y_2 is greater than 0.38 or if z_m is less than –1.0, the method described in this appendix cannot be used; instead another specimen must be compacted with soil which has been dried 2.0 percentage points from fill moisture content. Follow the procedure described in subparagraph 15.5.4. If the ratio Y_1/Y_2 is less than or equal to 0.38 and Z_m is greater than or equal to –1.0, continue with this procedure.

X1.3.7 Calculate the maximum wet unit weight at fill moisture content.

$$\gamma_{max_{w_f}} = \gamma_{wet_c}(1) + y_m \qquad \text{(X3)}$$

where:

$\gamma_{max_{w_f}}$ = maximum wet unit weight at fill moisture content, lbf/ft³
$\gamma_{wet_c}(1)$ = converted wet unit weight at point 1, lbf/ft³
y_m = the difference in converted wet unit weight between point 1 and the peak point of the curve

7-2092A (12-86)
Bureau of Reclamation

RAPID METHOD TEST RECORD
IN-PLACE UNIT WEIGHT

Designation USBR 7240- 89

PROJECT Example FEATURE Example NO. 15 FILL Zone 1A NO. 4

TESTED BY _____ DATE _____ COMPUTED BY _____ DATE _____ CHECKED BY _____ DATE _____

① MO.	DAY	SHIFT (A-DAY, B-SWING, C-GRAVE)	TEST NO.	TYPE (R=REG., C=CONG., D=DOUBT)	STATUS (A-ACC., R-REJ.)	BORR. AREA NO.	STD. COMP. METHOD	SOIL CLASS	STATION	OFFSET	ELEV.
5	29	B	4	R	A	22	RT	CL	12+40	28R	6685

IN-PLACE UNIT WEIGHT DATA

(1) MASS-SAND & CAN NO. ____ _____ lbm
(2) MASS-SAND RESIDUE & CAN _____ lbm
(3) MASS-SAND USED, (1)-(2) _____ lbm
(4) MASS-SAND IN TEMPLATE & CONE, NO. ____ _____ lbm
SEE BACK SIDE FOR FIELD DETERMINATION - USBR 7220
(5) MASS-SAND IN HOLE, (3)- (4) _____ lbm
(6) DENSITY OF CALIBRATED SAND _____ lbm/ft³
(7) VOL. OF HOLE, (5)/(6) _____ ft³
(8) TOTAL MASS WET MATERIAL & CAN _____ lbm
(9) MASS-CAN, NO. ____ _____ lbm

②

(10) TOTAL MASS WET MATERIAL (8)-(9) _____ lbm
* (11) WET UNIT WEIGHT, TOTAL MATERIAL (10)/(7) _____ lbf/ft³
(14) MASS-WET + NO. 4 _____ lbm
(17) SP. G., + NO. 4 _____
(21) MOISTURE CONTENT, + NO. 4 _____ %
(24) FILL UNIT WEIGHT, WET 125.0 DRY 106.6 lbf/ft³
(25) FILL MOISTURE CONTENT, w_f 17.3 %
(26) FIRST SPECIMEN UNIT WEIGHT, WET 127.0 DRY 108.3 lbf/ft³
(27) MAX. UNIT WT. AT FILL MOISTURE CONTENT WET 127.6 DRY 108.8 lbf/ft³
(28) OPT. MOISTURE CONTENT, w_o 18.1 %
$w_o = w_f + [z_m \times (1 + w_f/100)]$
(29) $w_o - w_f$ +0.8 dry %
(30) C VALUE (24)/(26) 98.4 %
(31) D VALUE (24)/(27) 98.0 %

④ COMMENTS - 18 SPACES AVAILABLE

③ RAPID METHOD CONTROL DATA

			FIRST SPECIMEN	SECOND SPECIMEN	
POINT NO.			1	2	3
ADDED WATER (%)			0.0	+ 2.0	+1.0
MASS-MOLD & WET SOIL (lbm)			14.25	14.30	14.34
MASS-MOLD (lbm) NO. 16			7.90	7.90	7.90
MASS-WET SOIL (lbm)			6.35	6.40	6.44
VOL. OF MOLD (ft³)			0.0500	0.0500	0.0500
*WET UNIT WEIGHT (lbf/ft³)			(26) 127.0	128.0	128.8
CONVERTED UNIT WEIGHT (lbf/ft³)				125.5	127.5

Y_1/Y_2 CHART (ONE PERCENT)

PT. 1	127.0	PT. 1	127.0
PT. 3	127.5	PT. 2	125.5
Y_1 (1-3)	-0.5	Y_2 (1-2)	+1.5
z_m	+0.7	y_m	+0.6
RLC	+0.1	PT. 1	127.0
$w_o - w_f = z_m$ + RLC	(29) +0.8	MAX. WET UNIT WT.	(27) 127.6

Y_2/Y_4 CHART (TWO PERCENT)

PT. B		PT. C	
PT. A		PT. A	
Y_2 (B-A)		Y_4 (C-A)	
x_m		y_m	
$z_m = x_m$ + ADDED WATER @ PT. A			
RLC		PT. A	
$w_o - w_f = z_m$ + RLC	(29)	MAX. WET UNIT WT.	(27)

PLUS NO. 4 (OVERSIZE)

(12) MASS-WET + NO. 4 & PAN _____ lbm
(13) MASS-PAN, NO. ____ , ____ lbm
(14) MASS-WET + NO. 4 (12)-(13) _____ lbm
(15) MASS + NO. 4 IN WATER _____ lbm
(16) VOL. OF + NO. 4 [(14)-(15)] /62.4 _____ ft³
(17) SP. G OF + NO. 4 (14)/[(14)-(15)] _____
(18) MASS- DRY + NO. 4 & PAN _____ lbm
(19) MASS-PAN, NO. ____ , ____ lbm
(20) MASS-DRY + NO. 4 (18)-(19) _____ lbm
(21) MOISTURE CONTENT + NO. 4 [(14)-(20)] /(20) x 100 _____ %
(22) VOL. OF -NO. 4 (7)-(16) _____ ft³
(23) MASS-WET -NO. 4 (10)-(14) _____ lbm
*(24) WET UNIT WT. (23)/(22) _____ lbf/ft³

FILL MOISTURE CONTENT

DISH NO.	AA
MASS-WET SOIL + DISH	358.1 g
MASS-DRY SOIL + DISH	322.4 g
MASS-DISH	116.3 g
MASS-WATER	35.7 g
MASS-DRY SOIL	206.1 g
MOISTURE CONTENT (25)	17.3 %

AUXILIARY TESTS
USBR 5300 - 89

IN PLACE UNIT WEIGHT PERFORMED IN ACCORDANCE WITH USBR 7205 - 89

+ # 4 SPECIFIC GRAVITY PERFORMED IN ACCORDANCE WITH USBR 5320 - 89

*ASSUME 1 lbf = 1 lbm

( ) STORED

Figure X1.1. – Rapid method test record — in-place unit weight — example.

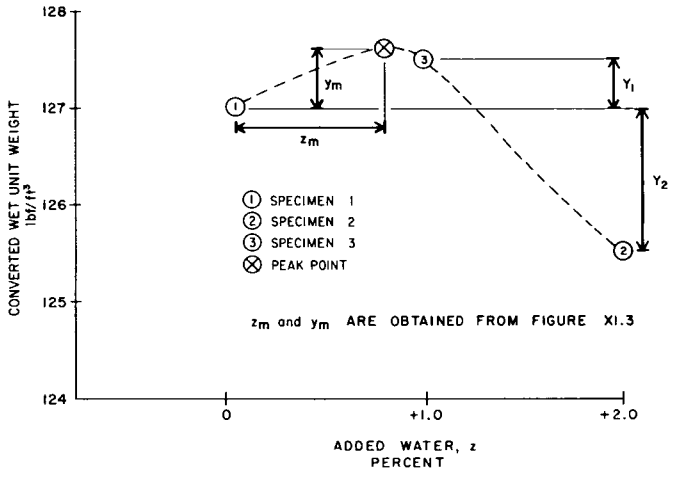

Figure X1.2. – Determining peak point of compaction curve, Y_1/Y_2 method.

Record the value on the form in the "Y_1/Y_2 Chart" section and on line (27) of figure X1.1.

X1.3.8 Determine the RLC using figure X1.4.

X1.3.8.1 Plot a horizontal line through the value of $\gamma_{max_{w_f}}$ on the ordinate (vertical) axis and plot a vertical line through the value of z_m on the abscissa (horizontal) axis. The intersection of these two lines determines the RLC. Select the red line closest to the intersection point; the number corresponding to this line is the RLC. Record the RLC value in the "Y_1/Y_2 Chart" section (fig. X1.1).

NOTE X1.3.–The RLC's are reproduced here as black lines. The lines are red on the original printed form.

X1.3.9 Calculate the value $w_o - w_f$

$$w_o - w_f = z_m + \text{RLC} \qquad \text{(X4)}$$

where:

$w_o - w_f$ = an approximation of the difference between optimum moisture content and fill moisture content, %

z_m = the difference in "added water" between the zero "added water" point and the peak point of the curve

RLC = red-line correction, %

Record the value on the form in the "Y_1/Y_2 Chart" section and on line (29) of figure X1.1.

X1.4 Proceed to paragraph 17.

RAPID METHOD OF CONSTRUCTION CONTROL

Tabulation of Coordinates of Maximum Unit Weight Point

Alternate method to eliminate drying requirement for soils close to optimum moisture content

Y_1 and Y_2 Method

Values in the table are coordinates of the maximum unit weight point of the compaction curve from point (1), the extreme left point. The upper value is Z_m or the value in the direction of added water; the lower value is Y_m or the value in the direction of unit weight. Table can be used with 3 points (1), (2), and (3) spaced at 0%, +2%, and +1%, respectively

Y_1 is the unit weight of point (1) minus the unit weight of point (3); Y_1 may be negative.

Y_2 is the unit weight of point (1) minus the unit weight of point (2); Y_2 is always positive.

Example

$Y_1 = 117.4 - 116.6 = 0.8$
$Y_2 = 117.4 - 115.0 = 2.4$

From table: $Z_m = -0.5$
$Y_m = 0.1$

Value of maximum unit weight point O
= unit weight of point (1) + Y_m
= 117.4 + 0.1 = 117.5

Added water at maximum unit weight point = $Z_m = -0.5$

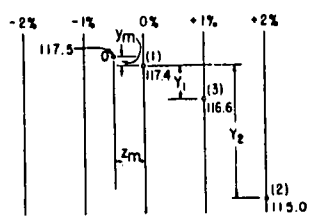

Full size pints of 101-D-519 are available from Bureau of Reclamation, Denver Office, Denver Federal Center, Denver, Colo.

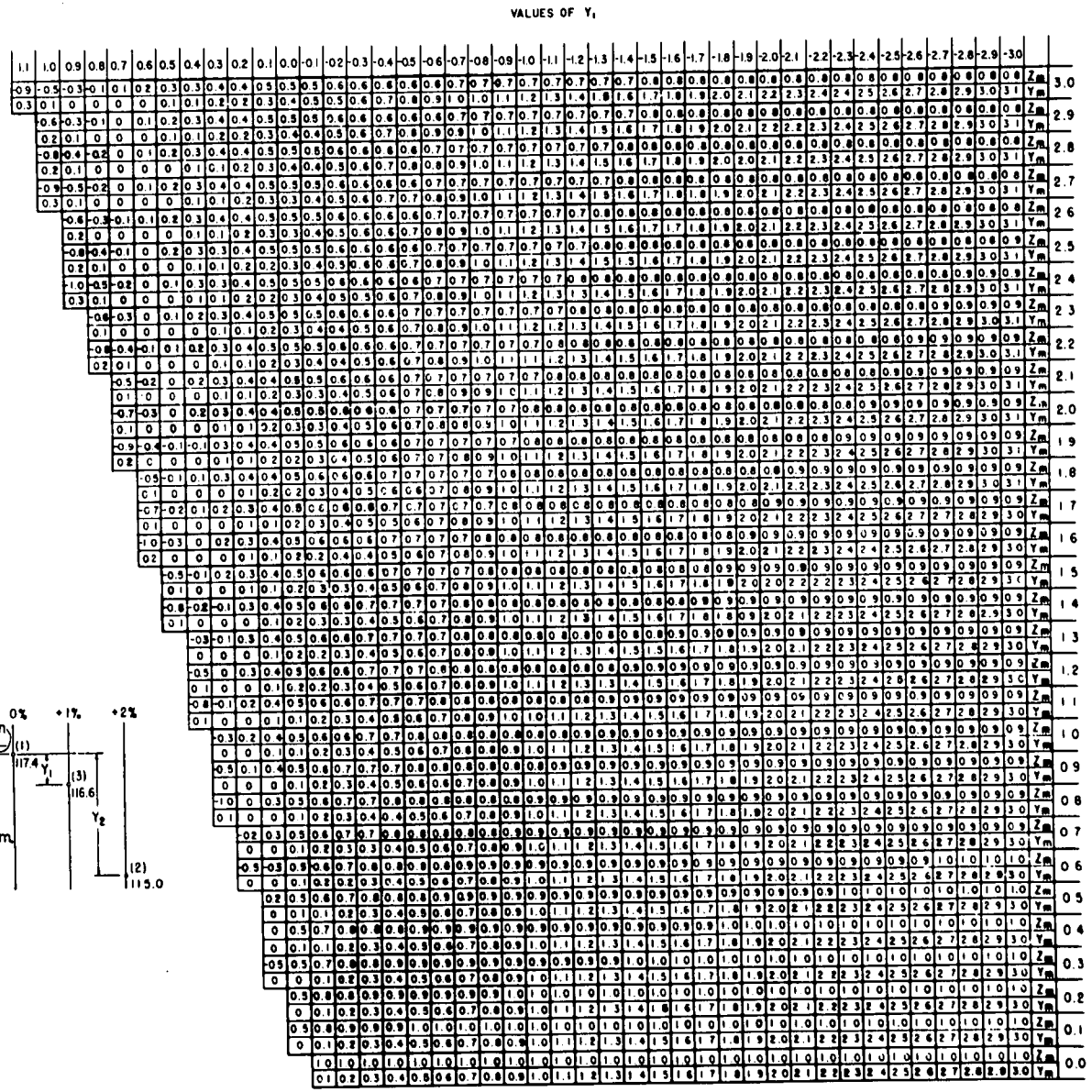

Figure X1.3. - Y_1/Y_2 Chart — rapid method of construction control. 101-D-519

7-1624B (3-86)
Bureau of Reclamation

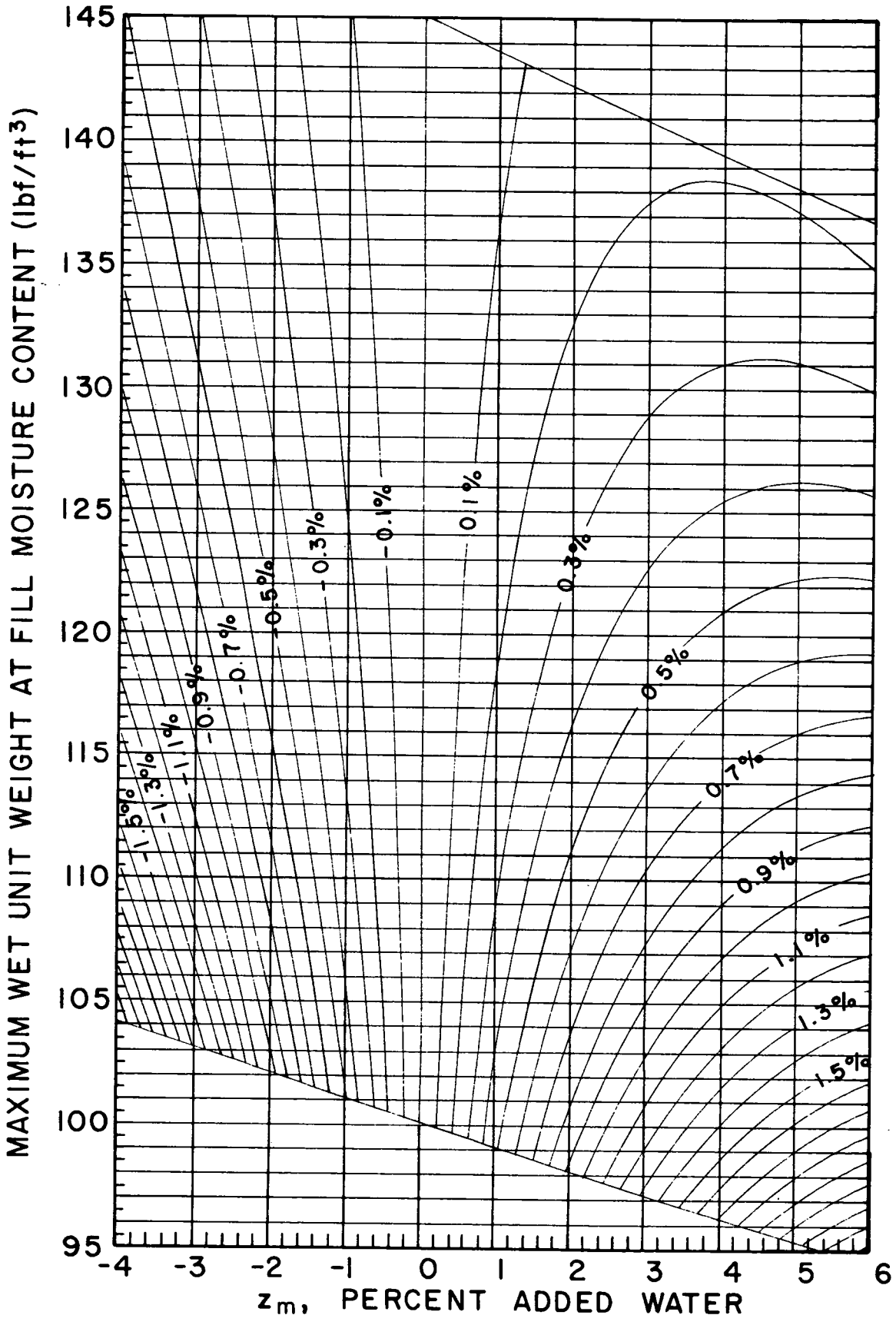

Figure X1.4. - Red-line correction — moisture adjustments values.

UNITED STATES DEPARTMENT OF THE INTERIOR
BUREAU OF RECLAMATION

USBR 7250-89

PROCEDURE FOR

DETERMINATION OF PERCENT RELATIVE DENSITY

INTRODUCTION

This procedure is under the jurisdiction of the Geotechnical Services Branch, code D-3760, Research and Laboratory Services Division, Denver Office, Denver, Colorado. The procedure is issued under the fixed designation USBR 7250. The number immediately following the designation indicates the year of acceptance or the year of last revision.

1. Scope

1.1 This designation outlines the procedure for determining the percent relative density of soils for which minimum and maximum index unit weight determinations are the most appropriate laboratory method of determining standard values for comparison.

1.1.1 Minimum and maximum index unit weight determinations provide standard laboratory test values that serve as a reference against which dry unit weight of a soil sample or specimen or the in-place dry unit weight of a soil is compared.

1.2 This procedure is normally performed on soils containing less than 5-percent fines. It also may be used, under certain circumstances, for soils containing 5 to 15 percent fines.

1.3 This designation also outlines the procedure for determining a dry unit weight value when a required percent relative density is known.

1.4 Three methods are provided as follows:

Method A — Determining Percent Relative Density by Calculation Method
Method B — Determining Percent Relative Density by Graphical Method
Method C — Determining Dry Unit Weight From Known Percent Relative Density

NOTE 1.–For this designation, the *Procedure* section and *Calculations* section have been combined.

2. Auxiliary Tests

2.1 The in-place dry unit weight must be determined by the appropriate procedure (see subpar. 3.2) before performing this procedure. The minimum index unit weight and maximum index unit weight must be determined in accordance with USBR 5525 and 5530 prior to performing this procedure.

3. Applicable Documents

3.1 *USBR Procedures — General:*

USBR 3900 Standard Definition of Terms and Symbols Relating to Soil Mechanics
USBR 5500 Performing Laboratory Compaction of Soils — 5.5-lbm Rammer and 18-in Drop
USBR 5510 Performing Laboratory Compaction of Soils — Harvard Miniature
USBR 5515 Performing Laboratory Compaction of Soils Containing Gravel
USBR 5525 Determining the Minimum Index Unit Weight of Cohesionless Soils
USBR 5530 Determining the Maximum Index Unit Weight of Cohesionless Soils
USBR 7255 Determining the Percent Compaction of Earthwork for Construction Control

3.2 *USBR Procedures — In-Place Unit Weight Determination:*

USBR 5370 Determining Unit Weight of Cylindrical Soil Specimens
USBR 5375 Determining Dry Unit Weight of Irregularly Shaped Soil Specimens
USBR 7205 Determining Unit Weight of Soils In-Place by the Sand-Cone Method
USBR 7206 Determining Unit Weight of Soils In-Place by the Rubber Balloon Method
USBR 7215 Determining Unit Weight of Soils In-Place by the Sleeve Method
USBR 7220 Determining Unit Weight of Soils In-Place by the Sand Replacement Method in a Test Pit
USBR 7221 Determining Unit Weight of Soils In-Place by the Water Replacement Method in a Test Pit
USBR 7230 Determining Unit Weight and Moisture Content of Soil In-Place—Nuclear Moisture-Density Gauge
USBR 7255 Determining the Percent Compaction of Earthwork for Construction Control.

4. Summary of Method

4.1 *Determining Percent Relative Density.*–After determining the in-place dry unit weight, the minimum index unit weight, and the maximum index unit weight, the percent relative density is calculated or determined graphically.

4.2 *Determining Dry Unit Weight Value.*–After determining the minimum index unit weight and the maximum index unit weight, a required dry unit weight can be calculated when a percent relative density is known.

5. Significance and Use

5.1 Percent relative density is used as a dry unit weight requirement for construction control of earthwork, for evaluating natural soils deposits, and as a means for controlling placement of laboratory test specimens.

5.2 The compaction characteristics of soils vary depending upon the gradation of the soil and the cohesiveness of any fines. Generally, the laboratory compaction test is most applicable for soils containing more than 15-percent fines. For construction control of these soils, percent compaction is used to determine the adequacy of compaction. For soils containing less than 5-percent fines, the minimum and maximum index unit weight tests are used to evaluate the compaction characteristics. For construction control of these soils, percent relative density is used to determine the adequacy of compaction.

Soils containing 5 to 15 percent fines may need to be tested by both the laboratory compaction test and the combination of the minimum-maximum index unit weight tests to conclude which is more appropriate. Whether percent compaction or percent relative density is used for construction control depends on the test results and how the soil is to be used. See USBR 7250 or 7255 (app. X1) for further discussion.

6. Terminology

6.1 Definitions are in accordance with USBR 3900. Terms of particular significance are:

6.1.1 *Relative Density* (D_d, %).–The ratio of: (1) the difference between the void ratio of a cohesionless soil in the loosest state and any given void ratio, to (2) the difference between its void ratios in the loosest state and in the densest state (ASTM definition).

NOTE 2.–The term *relative density* is used even though it is calculated using dry unit weights. This is because of broad practice in using the term and to prevent confusion by using a new term. Technically, if densities rather than dry unit weights were used to calculate the term, the value of percent relative density would be identical.

6.2 Terms not included in USBR 3900 specific to this designation are:

6.2.1 *Maximum Index Unit Weight* (γ_{dmax}).–The reference dry unit weight of a soil in the densest state of compactness that can be attained using a standard laboratory compaction procedure that minimizes particle segregation and breakdown (USBR 5530).

6.2.2 *Minimum Index Unit Weight* (γ_{dmin}).–The reference dry unit weight of a soil in the loosest state of compactness that can be placed using a standard laboratory procedure which prevents bulking and minimizes particle segregation (USBR 5525).

7. Precautions

7.1 Not applicable.

8. Calibration and Standardization

8.1 Not applicable, reference standards are not used for this procedure.

9. Conditioning

9.1 Not applicable, special conditioning requirements are not needed for this procedure.

10. Method A Procedure — Determining Percent Relative Density by Calculation Method

10.1 Data for determining percent relative density are recorded on various forms; there is no specific form for calculating relative density.

10.2 Determine in-place dry unit weight of the soil in accordance with the appropriate procedure given in subparagraph 3.2.

10.2.1 If the material tested contains particles larger than 3 inches (75 mm), the in-place dry unit weight and moisture content of the minus 3-inch fraction must be determined in accordance with the appropriate procedure. The in-place dry unit weight of the minus 3-inch fraction then is used in determination of percent relative density.

10.3 Determine the minimum index unit weight in accordance with USBR 5525.

10.4 Determine the maximum index unit weight in accordance with USBR 5530.

10.5 Calculate the percent relative density and record to the nearest 0.1 percent.

10.5.1 When dry unit weights are known, calculate the percent relative density:

$$D_d = 100 \left[\frac{\gamma_{dmax} (\gamma_d - \gamma_{dmin})}{\gamma_d (\gamma_{dmax} - \gamma_{dmin})} \right] \quad (1)$$

where:

D_d = percent relative density, %
γ_{dmax} = maximum index unit weight, lbf/ft³
γ_{dmin} = minimum index unit weight, lbf/ft³
γ_d = dry unit weight, lbf/ft³

10.5.2 When void ratios are known, the percent relative density may be calculated:

$$D_d = 100 \left(\frac{e_{max} - e}{e_{max} - e_{min}} \right) \quad (2)$$

where:

D_d = percent relative density
e = void ratio = $\frac{\text{volume of voids}}{\text{volume of solid particles}}$
e_{max} = void ratio at minimum index unit weight
e_{min} = void ratio at maximum index unit weight

11. Method B Procedure — Determining Percent Relative Density by Graphical Method

11.1 The plot used to determine percent relative density is shown on figure 1.

11.2 Determine the in-place dry unit weight of the soil in accordance with the appropriate procedure given in subparagraph 3.2.

11.2.1 If the material tested contains particles larger than 3 inches (75 mm), the in-place dry unit weight and moisture content of the minus 3-inch fraction must be determined in accordance with the appropriate procedure. The in-place dry unit weight of the minus 3-inch fraction then is used in determination of percent relative density.

11.3 Determine the minimum index unit weight in accordance with USBR 5525.

11.4 Determine the maximum index unit weight in accordance with USBR 5530.

11.5 Plot the minimum index unit weight (0 percent relative density) on the vertical scale on the left side of the graph.

11.6 Plot the maximum index unit weight (100 percent relative density) on the vertical scale on the right side of the graph.

11.7 Draw a straight line between the two points across the graph.

11.8 The intersection of this line and a horizontal line through the in-place dry unit weight, which may be plotted on either the right or left side vertical scale, indicates the percent relative density read on the horizontal scale at the bottom of the graph. Read and record the percent relative density to the nearest 1 percent.

NOTE 3.–The graph is not a semilog plot, and semilog graph paper cannot be used. Only this form should be used to graphically determine percent relative density. Because of possible distortions (parallax) in copying processes, only an original form should be used.

12. Method C Procedure — Determining Dry Unit Weight From Known Percent Relative Density

12.1 Data for determining a dry unit weight from percent relative density are recorded on various forms; there is no specific form for calculating the dry unit weight.

12.2 Determine the minimum index unit weight in accordance with USBR 5525.

12.3 Determine the maximum index unit weight in accordance with USBR 5530.

12.4 Using a predetermined—or specified—value of percent relative density, calculate the dry unit weight.

$$\gamma_d = \frac{\gamma_{d_{max}} \gamma_{d_{min}}}{\gamma_{d_{max}} - \left[\frac{D_d}{100} (\gamma_{d_{max}} - \gamma_{d_{min}})\right]} \quad (3)$$

where:

γ_d = dry unit weight, lbf/ft³
D_d = percent relative density, %
$\gamma_{d_{max}}$ = maximum index unit weight, lbf/ft³
$\gamma_{d_{min}}$ = minimum index unit weight, lbf/ft³

Record or report the dry unit weight to the nearest 0.1 lbf/ft³.

13. Report

13.1 Percent relative density is reported on various forms and in reports. When reported, the following items should be included:

- In-place dry unit weight [both total and minus 3 inch (75 mm), if applicable] and the procedure with USBR designation number.
- Minimum index unit weight.
- Maximum index unit weight.
- Percent relative density.

7-1595 (11-85)
Bureau of Reclamation

RELATIVE DENSITY PLOT

Designation USBR 7250- 89

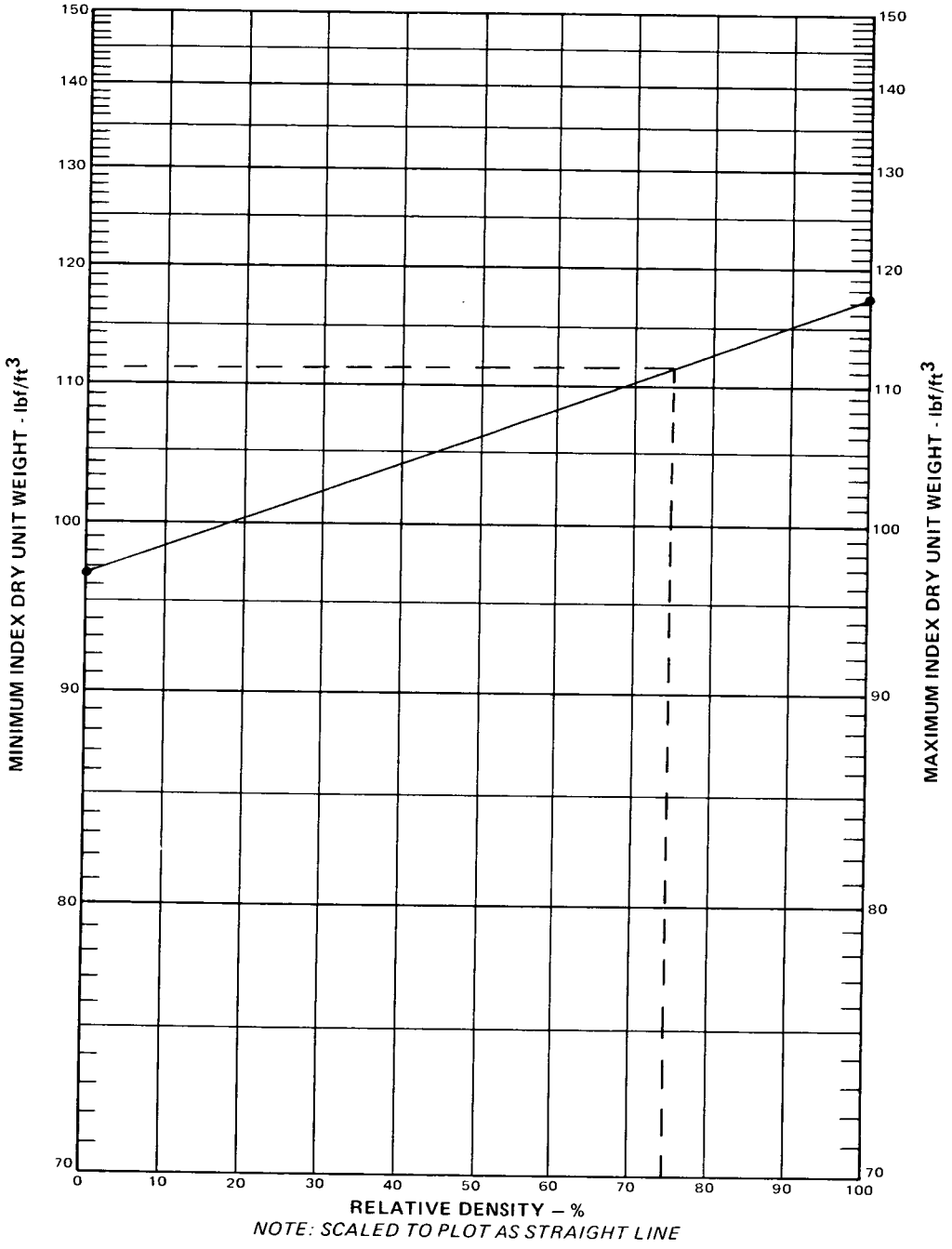

NOTE: SCALED TO PLOT AS STRAIGHT LINE

MINIMUM INDEX DRY UNIT WEIGHT 96.6 lbf/ft^3 IN-PLACE DRY UNIT WEIGHT 111.0 lbf/ft^3

MAXIMUM INDEX DRY UNIT WEIGHT 117.3 lbf/ft^3 RELATIVE DENSITY 74 %

SAMPLE NO. 5 HOLE NO. 3 DEPTH 10 FT.

TEST NO. 4 STATION 12+40 ELEVATION 6685 OFFSET 28R

PREPARED BY _____ CHECKED BY _____ FIGURE _____

GPO 849-285

Figure 1. – Relative density plot — example.

APPENDIX

X1. SELECTION OF PERCENT COMPACTION OR PERCENT RELATIVE DENSITY FOR MINUS NO. 4 SIEVE SIZE MATERIAL

X1.1 When soil is compacted, adequacy of compaction is evaluated by comparing measured in-place dry unit weight of the compacted soil to a dry unit weight value (or values) from standard laboratory tests. Generally, the comparison is expressed as "percent compaction" for cohesive soils and as "percent relative density" for cohesionless soils.

X1.2 For some soils, it may be difficult to judge which method is most appropriate. Coarse-grained soils with about 5 to 15 percent silty fines (GW-GM, GP-GM, SW-SM, SP-SM) are typically those for which selection of a specific compaction method may not be possible by visual inspection of materials.

NOTE X1.–There may be some cohesionless silts or sandy silts for which percent relative density may be appropriate. Normally this is not considered, but there may be special cases when evaluation of applicability of percent relative density may be necessary.

X1.3 When it is doubtful as to which compaction method should be used, both methods should be performed and the results compared. Often, this requires conducting tests before construction begins. This comparison and discussion is limited to soils that 100 percent pass the No. 4 sieve (4.75 mm). When an evaluation of methods is necessary for soils containing gravel or if there are questions concerning application of percent compaction or percent relative density, contact the Geotechnical Services Branch at the Denver Office.

X1.4 When the appropriate construction control method for soils is in question, the method that results in the highest required in-place dry unit weight (*not* the highest laboratory maximum dry unit weight) should be selected for control.

Example: The specifications require 95 percent compaction or 70 percent relative density. For a questionable soil, the maximum and minimum index unit weight tests were performed.

Minimum index unit weight = 83 lbf/ft^3
Maximum index unit weight = 118 lbf/ft^3

The compaction test resulted in a laboratory maximum dry weight of 114 lbf/ft^3.

The relative density test produced the highest maximum dry unit weight.

However, 70 percent relative density is equal to 105 lbf/ft^3, and 95 percent compaction is equal to 108 lbf/ft^3.

Therefore, the percent compaction method (USBR 7255) should be used for construction control since it gives the highest required in-place dry unit weight.

X1.5 When the required in-place dry unit weights — computed for the specified percent compaction and the specified percent relative density — are within 2 lbf/ft^3, or if the initial testing of several soil samples indicates either method is applicable, then either method may be used. Selection of the method may be based on the one most convenient or practical.

UNITED STATES DEPARTMENT OF THE INTERIOR
BUREAU OF RECLAMATION

USBR 7255-89

PROCEDURE FOR

DETERMINING THE PERCENT COMPACTION OF EARTHWORK FOR CONSTRUCTION CONTROL

INTRODUCTION

This procedure is under the jurisdiction of the Geotechnical Services Branch, code D-3760, Research and Laboratory Services Division, Denver Office, Denver, Colorado. The procedure is issued under the fixed designation USBR 7255. The number immediately following the designation indicates the year of acceptance or the year of revision.

1. Scope

1.1 This designation outlines the procedure for determining the percent compaction of soils for which the laboratory compaction test is the most appropriate method of determining a standard value for comparison.

1.1.1 The compaction test is performed to determine a maximum value of dry unit weight, using a standard laboratory test, that serves as a reference value against which the dry unit weight of a soil sample or specimen or the in-place dry unit weight of a soil is compared.

1.2 This procedure is normally performed on soils containing more than 15-percent fines. It also may be used, under certain circumstances, for soils containing 5 to 15 percent fines.

2. Auxiliary Tests

2.1 The in-place dry unit weight (see subpar. 3.2) and the laboratory maximum dry unit weight (see subpar. 3.3) for the soil must be determined by the appropriate procedures prior to performing this procedure.

3. Applicable Documents

3.1 *USBR Procedures — General*:
USBR 3900 Standard Definitions of Terms and Symbols Relating to Soil Mechanics
USBR 5525 Determining the Minimum Index Unit Weight of Cohesionless Soils
USBR 5530 Determining the Maximum Index Unit Weight of Cohesionless Soils
USBR 5830 Performing Construction Control of Soil-Cement
USBR 7250 Determination of Percent Relative Density

3.2 *USBR Procedures — In-Place Unit Weight Determination*:
USBR 5370 Determining Unit Weight of Cylindrical Soil Specimens
USBR 5372 Determining Unit Weight of Cylindrical Tube-Type Samples
USBR 5375 Determining Dry Unit Weight of Irregularly Shaped Soil Specimens
USBR 7205 Determining Unit Weight of Soils In-Place by the Sand-Cone Method
USBR 7206 Determining Unit Weight of Soils In-Place by the Rubber Balloon Method
USBR 7220 Determining Unit Weight of Soils In-Place by the Sand Replacement Method in a Test Pit
USBR 7221 Determining Unit Weight of Soils In-Place by the Water Replacement Method in a Test Pit
USBR 7230 Determining Unit Weight and Moisture Content of Soil In-Place—Nuclear Moisture-Density Gauge

3.3 *USBR Procedures — Laboratory Maximum Unit Weight Determination*:
USBR 5500 Performing Laboratory Compaction of Soils — 5.5-lbm Rammer and 18-in Drop
USBR 5510 Performing Laboratory Compaction of Soils — Harvard Miniature
USBR 5515 Performing Laboratory Compaction of Soils Containing Gravel
USBR 5800 Performing Laboratory Compaction of Soil-Cement Mixtures
USBR 5850 Performing Laboratory Compaction of Soil-Lime Mixtures
USBR 7240 Performing Rapid Method of Construction Control

4. Summary of Method

4.1 After determining the in-place dry unit weight of the U.S.A. Standard series minus No. 4 (4.75 mm) fraction and the laboratory maximum dry unit weight of a soil, the in-place dry unit weight is divided by the laboratory maximum dry unit weight and expressed as a percentage to obtain the percent compaction.

5. Significance and Use

5.1 Percent compaction is used as a requirement for construction control of earthwork, for evaluating natural soil deposits, and as a means for controlling placement of laboratory soil specimens.

5.2 The compaction characteristics of soils vary depending upon the gradation of the soil and the cohesiveness of any fines. Generally, the laboratory

compaction test is most applicable for soils containing more than 15-percent fines. For construction control of these soils, percent compaction is used to determine the adequacy of compaction. For soils containing less than 5-percent fines, the minimum and maximum index unit weight tests are used to evaluate the compaction characteristics. For construction control of these soils, percent relative density is used to determine the adequacy of compaction.

Soils containing 5 to 15 percent fines may need to be tested by both the laboratory compaction test and the combination of the minimum-maximum index unit weight tests to conclude which is more appropriate. Whether percent compaction or percent relative density is used for construction control depends on the test results and how the soil is to be used. See USBR 7250 or 7255 (app. X1) for further discussion.

6. Terminology

6.1 Definitions are in accordance with USBR 3900. Terms of particular significance are:

6.1.1 *Percent Compaction (%).*–The ratio, expressed as a percentage of: (1) dry unit weight of a soil, to (2) maximum dry unit weight obtained in a laboratory compaction test (ASTM definition).

6.1.2 *Compaction Test.*–A laboratory compacting procedure whereby a soil of a known moisture content is placed in a specified manner into a mold of given dimensions, subjected to a compactive effort of controlled magnitude, and the resulting dry unit weight determined. The procedure is repeated for various moisture contents sufficient to establish a relation between moisture content and dry unit weight (similar to ASTM).

7. Precautions

7.1 Not applicable.

8. Calibration and Standardization

8.1 Not applicable, reference standards are not used for this procedure.

9. Conditioning

9.1 Not applicable, special conditioning requirements are not needed for this procedure.

10. Procedure

10.1 Data for determining percent compaction are recorded on various forms; there is no specific data form for calculating percent compaction.

10.2 Obtain in-place dry unit weight and in-place moisture content of soil in accordance with the appropriate procedure given in subparagraph 3.2.

10.2.1 If the material tested contains particles larger than the No. 4 sieve (4.75 mm), the in-place dry unit weight and moisture content of the minus No. 4 fraction must be determined in accordance with appropriate procedures. The in-place dry unit weight of the minus No. 4 fraction is then used in determining percent compaction.

10.3 Obtain the laboratory maximum dry unit weight and optimum moisture content in accordance with the appropriate procedure given in subparagraph 3.3.

10.4 Calculate percent compaction and record to the nearest 0.1 percent.

NOTE 1.–For specifications that permit use of USBR 7240, the percent compaction is equivalent to the "D-value" as determined by that procedure.

11. Calculations

11.1 Calculate percent compaction as follows:

$$\text{Percent compaction} = 100 \left(\frac{\text{in-place dry unit weight}}{\text{laboratory maximum dry unit weight}} \right)$$

12. Report

12.1 Percent compaction is reported on various forms and in reports. When reported, the following items are to be included:

- In-place dry unit weight and in-place moisture content (both total and minus No. 4, if applicable) and the USBR procedure number.
- Laboratory maximum dry unit weight, optimum moisture content, and the USBR procedure number.
- Percent compaction and, if required, the difference between optimum moisture content and in-place moisture content.

APPENDIX

X1. SELECTION OF PERCENT COMPACTION OR PERCENT RELATIVE DENSITY FOR MINUS NO. 4 SIEVE SIZE MATERIAL

X1.1 When soil is compacted, adequacy of compaction is evaluated by comparing measured in-place dry unit weight of the compacted soil to a dry unit weight value (or values) from standard laboratory tests. Generally, the comparison is expressed as "percent compaction" for cohesive soils and as "percent relative density" for cohesionless soils.

X1.2 For some soils, it may be difficult to judge which method is most appropriate. Coarse-grained soils with about 5 to 15 percent silty fines (GW-GM, GP-GM, SW-SM, SP-SM) are typically those for which selection of a compaction method may not be possible by visual inspection of the materials.

NOTE X1.–There may be some cohesionless silts or sandy silts for which percent relative density may be appropriate. Normally, this is not considered, but there may be special cases when evaluation of applicability of percent relative density may be necessary.

X1.3 When it is doubtful as to which compaction method should be used, both methods should be performed and the results compared. Often, this requires conducting tests before construction begins. This comparison and discussion is limited to soils that 100 percent pass the No. 4 sieve (4.75 mm). When an evaluation of methods is necessary for soils containing gravel or if there are questions concerning application of percent compaction or percent relative density, contact the Bureau's Geotechnical Services Branch at the Denver Office.

X1.4 When the appropriate construction control method for soils is in question, the method that results in the highest required in-place dry unit weight (*not* the highest laboratory maximum dry unit weight) should be selected for control.

Example: The specifications require 95 percent compaction or 70 percent relative density. For a questionable soil, the maximum and minimum index unit weight tests were performed.

Minimum index unit weight = 83 lbf/ft^3
Maximum index unit weight = 118 lbf/ft^3

The compaction test resulted in a laboratory maximum dry unit weight of 114 lbf/ft^3.

The relative density test produced the highest maximum dry unit weight.

However, 70 percent relative density is equal to 105 lbf/ft^3, and 95 percent compaction is equal to 108 lbf/ft^3.

Therefore, the percent compaction method (USBR 7255) should be used for construction control since it gives the highest required in-place dry unit weight.

X1.5 When the required in-place dry unit weights — computed for the specified percent compaction and the specified percent relative density — are within 2 lbf/ft^3 or if the initial testing of several soil samples indicates either method is applicable, then either method may be used. Selection of the method may be based on the one most convenient or practical.

UNITED STATES DEPARTMENT OF THE INTERIOR
BUREAU OF RECLAMATION

USBR 7300-89

PROCEDURE FOR

PERFORMING FIELD PERMEABILITY TESTING BY THE WELL PERMEAMETER METHOD

INTRODUCTION

This procedure is under the jurisdiction of the Geotechnical Services Branch, code D-3760, Research and Laboratory Services Division, Denver Office, Denver, Colorado. The procedure is issued under the fixed designation USBR 7300. The number immediately following the designation indicates the year of acceptance or the year of last revision.

1. Scope

1.1 This designation is used to determine the coefficient of permeability of semipervious and pervious soils. The types of soil for which the test is applicable range from mixtures of sand, silt, and clay with coefficients of permeability greater than 1×10^{-5} cm/s to relatively clean sands or sandy gravels with coefficients of permeability less than 1×10^{-1} cm/s. There is lack of experience with the test in soils with coefficients of permeability outside these limits. The effects of capillarity on permeability test results were not taken into account during development of the theoretical background.

NOTE 1.–This test is similar to the "Shallow Well Pump-in Test for Hydraulic Conductivity" in the *Drainage Manual* [1].[1] However, some of the float valves allow greater waterflow from the water reservoir than the carburetor valve of the *Drainage Manual* test.

2. Auxiliary Tests

2.1 Soil sampling by USBR 7010 and classification of soil from different strata by USBR 5005 are required to identify soil stratification and location of any water table.

3. Applicable Documents

3.1 *USBR Procedures*:
USBR 3900 Standard Definitions of Terms and Symbols Relating to Soil Mechanics
USBR 5005 Determining Unified Soil Classification (Visual Method)
USBR 7010 Performing Disturbed Soil Sampling Using Auger Boring Method
3.2 *ASTM Standard*:
E 1 ASTM Thermometers

4. Summary of Method

4.1 The method consists of measuring the rate at which water flows out of an uncased well under a constant gravity head. The coefficient of permeability of the soil is calculated using (1) the relatively constant flow rate which is reached after a period of time, (2) the water temperature, (3) the constant height of water in the well, and (4) the radius of the well.

5. Significance and Use

5.1 The method is used to determine the average coefficient of permeability for soil in its natural condition, primarily along proposed canal alignments or at reservoir sites. The permeability results are used in appropriate equations for calculating approximate seepage rates to aid in decisions on lining requirements. Although the test is usually performed in auger holes, it can also be used in test pits.

6. Terminology

6.1 Definitions are in accordance with USBR 3900.

7. Interferences

7.1 Proper use of the test requires soil characteristics which allow excavation of an uncased well of reasonably uniform dimensions with the soil sufficiently undisturbed to allow unrestricted outward flow of water from the hole.
7.2 Test results are adversely affected by using unclean water for the permeant.
7.3 When relatively impervious or highly pervious soil layers are present around the well, this should be considered when evaluating test results.
7.4 For tests during cold weather, a shelter with heat should be used to maintain ground and water temperatures above freezing.

8. Apparatus

8.1 *General Apparatus*:
8.1.1 *Augers.*–Hand augers suitable for excavating permeability test holes. Power-driven augers may be used if it is determined that disturbance of soil around the well is no more than for a hand auger.

[1] Number in brackets refers to the reference.

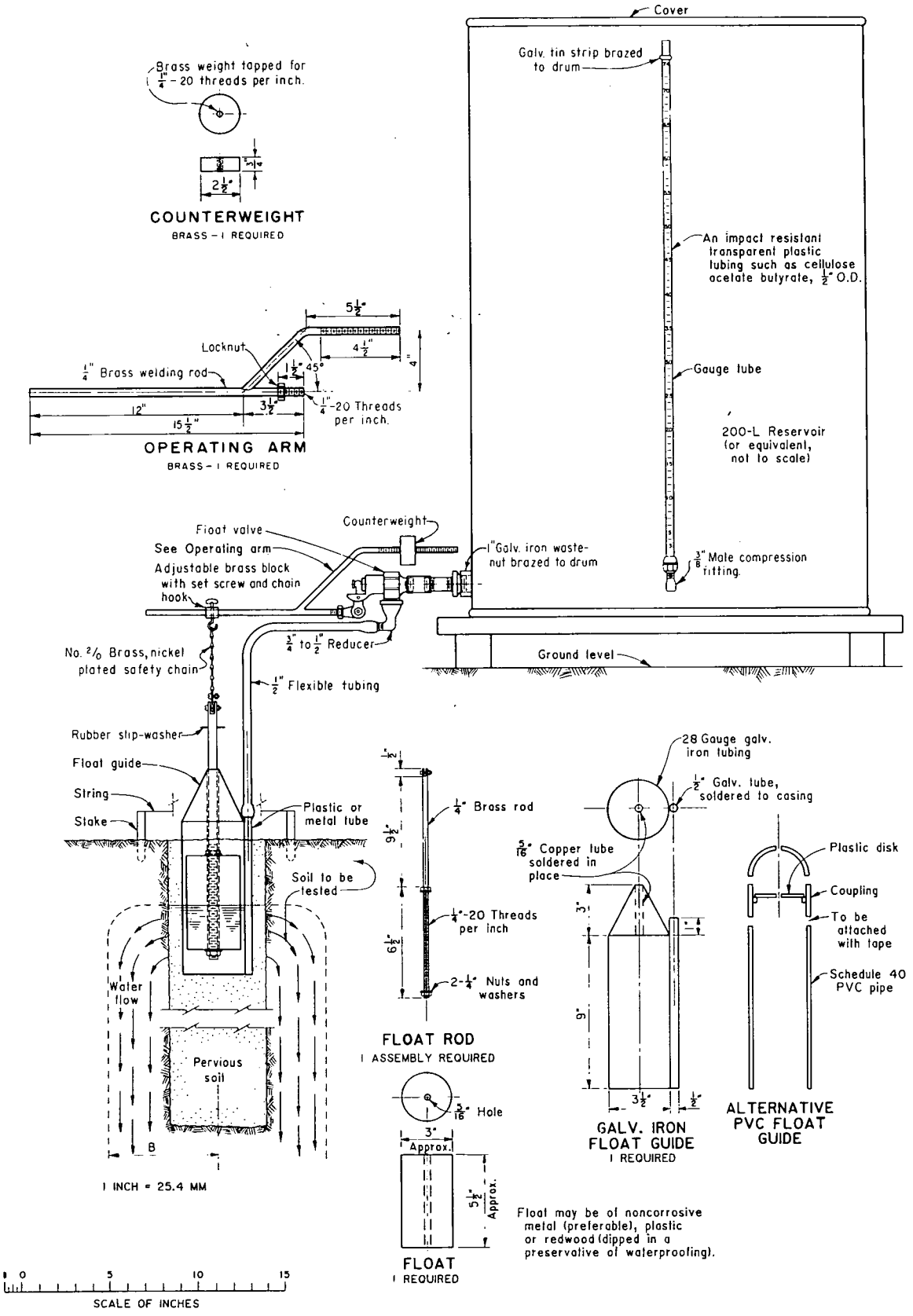

Figure 1. – Drawing of well permeameter test apparatus (101-D-38).

8.1.2 *Thermometer.*–0 to 50 °C, 0.5 °C divisions, conforming to the requirements of ASTM E 1.

8.1.3 Hammer, surveyors' stakes, and string for depth measurements in the well.

8.2 *Equipment Unique to This Procedure* (see figs. 1 and 2).

8.2.1 *Water Reservoir.*–A clean, covered, watertight reservoir of sufficient capacity which can be conveniently refilled at intervals to provide a continuous supply of water during the test. A 200-liter drum with a volume gauge tube of cellulose acetate butyrate has been found to be suitable for normal usage. Wooden blocking is required to raise the reservoir above the ground level.

8.2.2 *Valve.*–A float valve with operating arm (see fig. 3 for valve size).

8.2.3 *Float.*–A wooden, plastic, or metal float with brass stem.

8.2.4 *Float Guide.*–A guide of galvanized iron, PVC (polyvinyl chloride) or other materials to allow the float to move vertically.

8.2.5 *Counterweights.*–Brass counterweights for arm of float valve.

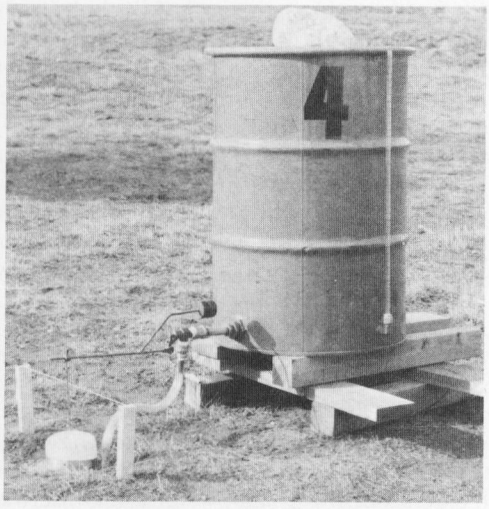

Figure 2. – Typical well permeameter test set-up.

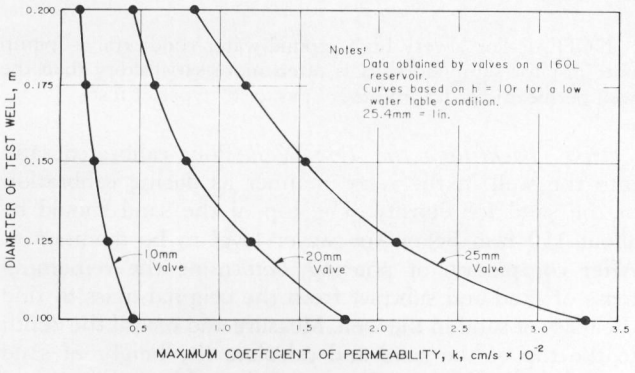

Figure 3. – Maximum permeability coefficients measurable with typical float valves commonly used on stock-watering tanks.

NOTE 2.–There may be other appropriate valve-float equipment available for maintaining a constant water level in the test well.

8.2.6 *Water Truck.*–A water tank truck or tank trailer of sufficient capacity to provide a continuous supply of clean water for the number of test reservoirs in simultaneous use.

9. Reagents and Materials

9.1 *Density Sand.*–Clean, dry, pervious, coarse sand (or fine gravel) calibrated for density and with a coefficient of permeability at least 1×10^2 cm/s greater than that of the soil to be tested is to be used for backfilling the test well. A washed sand graded between the U.S.A. Standard series No. 4 to No. 8 sizes (4.75 to 2.36 mm) or gravel graded between the 3/8 to No. 4 (9.5 to 4.75 mm) sizes is recommended. The purpose of the pervious backfill is to (1) distribute water evenly in the well, (2) support the wall of the well and prevent sloughing during saturation of the soil, and (3) provide a means of indirectly determining the average radius of the well. The radius of the well is required for permeability calculations and, as explained later, a standard sand calibrated for mass per unit volume (density) can serve this purpose.

9.2 *Water.*–The water for this test is to be clean. Small amounts of suspended soil or other foreign material in the water may become deposited in the soil around the well and may greatly reduce the flow, causing erroneous results. When there is sediment in the water, arrangement should be made to remove the particles by settling or filtration. In some instances, a chemical reaction can take place between water of a particular quality and the soil being tested, which may cause an increase or decrease in soil permeability. Therefore, water similar in quality (exclusive of suspended sediment) to that expected to permeate the soil during project operation should be used for the permeability test.

10. Precautions

10.1 *Safety Precautions.*– Normal precautions taken for any fieldwork.

10.2 *Technical Precautions*:

10.2.1 In windy areas, protection from blowing soil may be needed to prevent interference to the operation of the valve-float mechanism and to prevent infiltration of soil into the top of the well.

10.2.2 Test equipment must be protected from disturbance by animals, moving equipment, children, or other sources.

11. Calibration

11.1 *Water Reservoir* (fig. 1).–Calibrate the volume of the water reservoir and mark the gauge tube in convenient increments for volume readings. For a 200-L reservoir, mark the volume gauge tube at 5-L intervals with the largest volume reading near the top of the tube

so volume readings will decrease downward and permit volume determination by subtracting figures.

NOTE 3.–For a volume tube of cellulose acetate butyrate (which is recommended because it is durable for use under field conditions), ink with an acetate base makes a permanent mark on the tube. India ink can be used for marking if the surface of the plastic is first roughened with emery cloth or steel wool; the tube then should be coated with clear lacquer to preserve the ink marks.

11.2 *Density Sand.*–Calibrate the sand by finding the density obtained by pouring the sand into a pipe or cylinder with dimensions approximately those of the test well. The pouring height above the top of the pipe should be approximately the same as that for the well. The calibrated density of sand is calculated from the mass of sand used to fill the pipe and the volume of pipe occupied by the sand; i.e., density equals mass per volume.

12. Conditioning

12.1 Special conditioning requirements are not needed for this procedure.

13. Procedure

13.1 *Soil Logs.*–Prior to performing field permeability tests for a seepage investigation, exploratory borings should be made at appropriate intervals and logs of the borings should be prepared to show a representative soil profile. Soil classifications of the different strata encountered should be recorded. The form shown in figure 4 can be used for this purpose.

The minimum depth of borings below a proposed canal invert or reservoir bottom should be to the ground-water table, to an impervious soil layer, or to a depth about twice the design water depth, whichever is reached first (see fig. 8). The location of soil layers that appear to be impervious and the depth to a water table, if reached, will affect permeability and seepage calculations. For depths below a canal invert or reservoir bottom greater than twice the water depth, the presence of a water table or soil layers of significantly different permeability than that of overlying soil will not influence permeability test results.

13.2 *Size of Test Well.*–For a low water table condition (see condition I, fig. 8), the depth of the well may be of any desired dimension provided the ratio of water height h in the well to well radius is greater than 1. To fulfill theoretical considerations in development of the equations for high water table conditions (conditions II and III, fig. 8), the ratio of water height h in the well to well radius should be greater than 10. A practical well diameter is usually 150 mm. Normally, in a canal seepage investigation, the water surface elevation in the well and the well bottom should correspond to the elevations of the proposed canal water surface and canal bottom, respectively. Test results would then provide an average permeability for the soils in the canal prism. For pervious soils, well size is limited by the capacity of the equipment to maintain a continuous supply of water at the desired constant head level. If necessary, more than one reservoir can be interconnected to increase water capacity. Figure 3 shows the maximum coefficients of permeability that can be measured in wells of various diameters using float valves of different sizes. This is of assistance in selecting the valve size to be used, although a valve of approximately 20-mm size is often used for general purposes.

13.3 *Soil Permeability in Test Pits.*–The well permeameter test method also can be adapted for use in test pits in a low water table condition if the ratio of water depth to pit radius is greater than 1, and sand or gravel backfill is used to prevent soil in the sides of the pit from sloughing. In this case, calibration of backfill is not necessary since dimensions of a test pit of regular shape can be found by averaging linear measurements. If a rectangular pit is used, the effective cylindrical radius for use in permeability calculations can be determined from the pit dimensions (see fig. 5).

13.4 *Excavation of the Test Well.*–Wells for permeability tests should be prepared carefully to cause as little disturbance to surrounding soil as possible. Where moisture content of the soil is high, the wall of the hole can become smeared and outward flow of water restricted. In this case, the well should be excavated using two hand augers, one having a diameter at least 25 mm smaller than the other. First, auger a pilot hole with the smaller auger and follow this with the larger auger. This causes less disturbance to the wall of the well than if a single auger is used. If it is still apparent that the wall of the well is smeared, the walls should be scraped or scratched with improvised tools to remove the smeared surface. Remove any loose soil from the bottom of the well.

13.5 *Depth of the Well* (figs. 1 and 4).–Depth measurements in the well should be measured (and recorded) from a common base line. A convenient method is to measure from a horizontal string line stretched between two stakes driven firmly into the ground on opposite sides of the well (fig. 1). When the bottom of the well extends below ground-water level, insert a casing during excavation to prevent the wall from caving. Carefully pull the casing as the well is backfilled with sand through the casing.

NOTE 4.–For a very high ground-water condition, a "pump out" test for saturated soils is often more satisfactory than the well permeameter test or other "pump in" types of tests.

13.6 *Backfilling the Test Well.*–Pour calibrated sand into the well in the same manner as during calibration of the sand for density. The top of the sand should be about 150 mm below the water level to be maintained. After completion of pouring, determine the remaining mass of sand and subtract from the original mass to find the mass of sand in the well. Measure and record the depth to the top of the sand and calculate the height of sand in the well. From the density of the calibrated sand and the mass and height of sand in the well, calculate the

7-1429 (5-89)
Bureau of Reclamation

WELL PERMEAMETER METHOD
(SOIL CLASSIFICATIONS AND WELL DIMENSIONS)

Designation USBR 7300 - 89

TEST NO. 22	PROJECT Example	FEATURE Example	
TEST LOCATION Station 257+94	TEST LIMITS:	STATION 257+25	TO STATION 258+62
GROUND ELEVATION 122.6	CANAL DATA:	SIDE SLOPES 2:1	BOTTOM WIDTH 7.9 m / WATER DEPTH 1.890 m
TESTED BY / DATE	COMPUTED BY / DATE	CHECKED BY / DATE	

☒ m ☐ ft

OBSERVATION HOLE

STRATA FROM	DEPTH TO	SOIL CLASSIFICATION
0	0.45	SILTY CLAY: approx. 85% fines with medium plasticity, slow dilatancy, medium dry strength, medium toughness; approx. 15% fine sand; maximum size, fine sand, moist, dark gray; easy to auger; some roots present; no reaction with HCl (CL-ML).
0.45	1.77	CLAYEY SILT: approx. 95% fines with low plasticity, slow dilatancy, low dry strength, low toughness; approx. 5% fine sand; maximum size, fine sand; wet, brown; easy to auger; no reaction with HCl (ML-CL).
1.77	3.87	SILTY SAND: approx. 60% fine to coarse, hard, angular sand; approx. 20% non-plastic fines; approx. 20% predominantly fine, hard, angular to subangular gravel; maximum size, 30mm; moist, brown; moderately hard to auger; slight reaction to HCl (SM).

(1) DEPTH TO WATER TABLE (FROM GROUND SURFACE)	3.75	☒ m	☐ ft
WELL DIMENSIONS (DEPTHS FROM STRING BASELINE)			
(2) DEPTH TO GROUND SURFACE	0.213	☒ m	☐ ft
(3) DEPTH TO BOTTOM OF WELL	1.222	☒ m	☐ ft
(4) DEPTH TO TOP OF SAND	0.375	☒ m	☐ ft
(5) HEIGHT OF SAND (3) - (4)	0.847	☒ m	☐ ft
(6) DEPTH TO WATER SURFACE IN WELL	0.280	☒ m	☐ ft
(7) HEIGHT OF WATER IN WELL h = (3) - (6)	0.942	☒ m	☐ ft
DETERMINATION OF WELL RADIUS			
(8) DENSITY OF STANDARD SAND	1400	☒ kg/m³	☐ lbm/ft³
(9) MASS OF SAND + CONTAINER BEFORE FILLING WELL	34.02	☒ kg	☐ lbm
(10) MASS OF SAND + CONTAINER AFTER FILLING WELL	2.86	☒ kg	☐ lbm
(11) MASS OF SAND USED (9) - (10)	31.16	☒ kg	☐ lbm
(12) VOLUME OF WELL (11)/(8)	0.0223	☒ m³	☐ ft³
(13) RADIUS OF WELL $r = \sqrt{(12)/(5)\,\pi}$	0.092	☒ m	☐ ft

Figure 4. – Well permeameter method (soil classifications and well dimensions) — example.

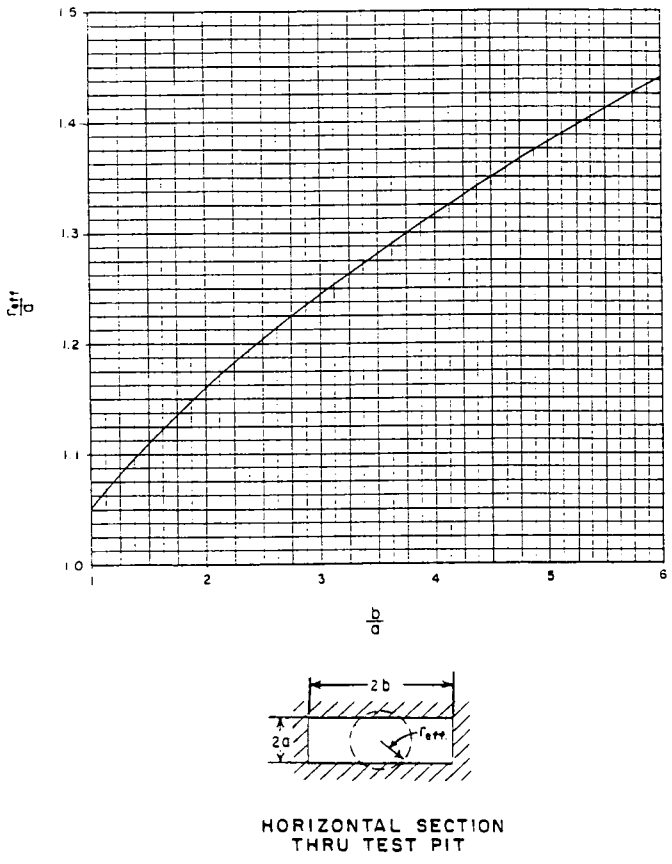

Figure 5. – Effective cylindrical radius of rectangular test pits. (fig. 44 of ref. 2)

equivalent radius of the well (fig. 4). Development of the equation for determining the radius is:

$$V_s = \pi r_w^2 h_s = \frac{m_s}{\rho_s}$$

$$r_w^2 = \frac{V_s}{\pi h_s}$$

$$r_w = \sqrt{\frac{m_s}{\pi h_s \rho_s}} \qquad (1)$$

where:

V_s = volume of sand
ρ_s = density of sand
h_s = height of sand
m_s = mass of sand
r_w = equivalent radius of well

13.7 *Test Equipment Set Up.*–Place the float guide, with the float inside, on top of the sand in the well. Hold the float guide in place vertically and pour sand around it. When a test is to be conducted with the water level more than an arm's length below the ground surface, lower the float guide by the chain and drop sand around the guide to hold it in place during the test. The rubber slip washer on the float stem is to prevent particles of sand from becoming lodged between the float stem and the float guide. The mass of sand around the guide need not be known because it is not used in computations for well radius. Set up the water reservoir and valve-float arrangement with the flexible tube from the float valve to well and the chain attached to the float stem as shown on figures 1 and 2. The reservoir should be set on a firm platform or cribbing at a convenient height.

13.8 *Performing the Test*:

13.8.1 Open the valve on the reservoir and gradually fill the well with water.

13.8.2 After the water enters the float casing, readjust the counterbalance on the operating arm of the valve and the chain length as necessary to maintain the desired water level in the well.

13.8.3 After the water level in the well has stabilized, begin reading the volume gauge on the reservoir and record the gauge readings at convenient time intervals using the form as shown on figure 6. The well must be kept continuously full of water until the test is completed. In general, dry soil at the start of the test absorbs water at a comparatively high rate. However, as the moisture content of the soil increases around the well, the rate generally decreases and usually stabilizes. It is this constant rate after stabilization that is used to compute permeability.

13.8.4 As records of water discharge from the reservoir and time are made, plot a curve of accumulative flow versus time as shown on figure 7.

14. Test Duration

14.1 Minimum duration for the test is the theoretical time required to discharge the minimim volume of water into the soil to form a saturated envelope of hemispherical shape with a radius B (see fig. 1).

The minimum volume of water is determined by the equation:

$$V_{min} = 2.09\, S \left\{ h \sqrt{\ln \left[\frac{h}{r} + \sqrt{\left(\frac{h}{r}\right)^2 + 1} \right]^{-1}} \right\}^3 \qquad (2)$$

where:

V_{min} = minimum volume
S = specific yield of the soil
h = height of water in well
r = well radius

NOTE 5.–The quantity in brackets is the theoretical determination for radius B (fig. 1).

For soils in which this test would most likely be used, the specific yield varies from about 0.1 for fine-grained soils to 0.35 for coarse-grained soils. When the specific yield of the soil is unknown, the value of 0.35 should be used to give a conservative value for minimum volume and to ensure that the test duration is sufficient. Thus,

7-1428 (5-89) Bureau of Reclamation	WELL PERMEAMETER METHOD (TIME AND VOLUME MEASUREMENTS)	Designation USBR 7300 - 89 __
TEST NO. 22	PROJECT Example	FEATURE Example
TEST LOCATION 257+94	WATER SOURCE Youngfield River	GROUND TEMPERATURE 20° C
TESTED BY DATE	COMPUTED BY DATE	CHECKED BY DATE

TIME		WATER VOLUME ☒ L ☐ ft³							
CLOCK (24hr.)	ACCUM. (min.)	DRUM NO. 3		DRUM NO. 4		TOTAL DIFFERENCE	ACCUM. FLOW (q)	WATER TEMPERATURE °C	
		READ	DIFFERENCE	READ	DIFFERENCE			WELL	RESERVOIR
8:00	0	201	--	204	--	---	---	--	--
8:50	50	127	74	124	80	154	154	19	25
9:40	100	80	47	74	50	97	251	19	--
10:30	150	42	38	34	40	78	329	19	--
11:20	200	8	34	1	33	67	396	20	26
11:30	210	202	--	201	--	--	---	--	--
12:10	250	179	23	179	22	45	441	20	--
13:00	300	153	26	153	26	52	493	21	--
13:50	350	124	29	125	28	57	550	21	27
14:40	400	97	27	98	27	54	604	22	--
15:30	450	71	26	70	28	54	658	22	--
16:20	500	46	25	44	26	51	709	21	--
17:10	550	19	27	19	25	52	761	20	--
17:20	560	204	--	202	--	--	---	--	--
18:00	600	181	23	181	21	44	805	20	27
18:50	650	154	27	154	27	54	859	20	--
19:40	700	127	27	127	27	54	913	19	--
20:30	750	100	27	99	28	55	968	19	--
21:20	800	74	26	73	26	52	1020	18	25
23:00	900	35	39	33	40	79	1099	17	--
24:40	1000	5	30	3	30	60	1159	15	--

Figure 6. - Well permeameter method (time and volume measurements) — example.

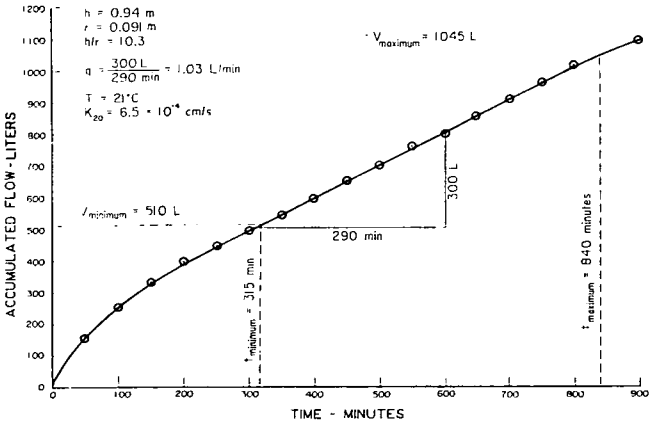

Figure 7. – Time-discharge curve for well permeameter test — low water table example.

with a known or assumed specific yield for the soil and with the dimensions of the well, the minimum volume can be computed and the test discontinued when the minimum volume has been discharged through the well. In pervious soils, it may appear that the volume-time curve has reached a uniform slope after several hours when points are plotted over short time intervals. However, in order to avoid discontinuing a test prematurely, it must be continued for at least 6 hours from the starting time so the slope can be determined over a period of 2 to 3 hours. The first straight portion of the curve should be used for determining the rate of discharge (fig. 7). The test must be conducted continuously without allowing the reservoir to run dry until the test has been completed.

14.2 *Maximum Time.*–If the test is continued for a long period, a water mound may build up around the well and render the test results inaccurate. The maximum time for test duration is the time necessary to discharge through the test well the maximum volume of water as determined using equation (2), substituting 15.0 for 2.09 and in this case, using an assumed minimum value (when the true value is unknown) of 0.1 for specific yield.

$$V_{max} = 2.05\ V_{min} \tag{3}$$

15. Calculations

15.1 *Computing Coefficient of Permeability.*–Equations (4), (5), or (6) are provided for calculating coefficient of permeability, for the well permeameter test. The presence or absence of a water table or impervious soil layer within a distance of less than three times that of the water depth in the well (measured from the water surface) will enable the water table to be classified as condition I, II, or III, as illustrated on figure 8.

15.1.1 *Low Water Table.*–When the distance from the water surface in the test well to the ground-water table, or to an impervious soil layer which is considered for test purposes to be equivalent to a water table, is greater than three times the depth of water in the well, a low water table condition exists as illustrated by condition I (fig. 8). For determination of the coefficient of permeability under such a condition, equation (4) given in subparagraph 15.2 should be used.

15.1.2 *High Water Table.*–When the distance from the water surface in the test well to the ground-water table, or to an impervious layer, is less than three times the depth of water in the well, a high water table condition exists as illustrated by condition II or III. Condition II shows a high water table with the water table below the well bottom, and for this condition equation (5) should be used. Condition III shows a high water table with the water table above the well bottom. For this condition, equation (6) should be used.

15.2 *Equations*:

Condition I:

$$k_{20} = \frac{qV}{2\pi h^2}\left\{ \ln\left[\frac{h}{r} + \sqrt{\left(\frac{h}{r}\right)^2 + 1}\right] - \frac{\sqrt{1 + \left(\frac{h}{r}\right)^2}}{\frac{h}{r}} + \frac{1}{\frac{h}{r}}\right\} \tag{4}$$

Condition II:

$$k_{20} = \frac{qV}{2\pi h^2}\left[\frac{\ln\left(\frac{h}{r}\right)}{\frac{1}{6} + \frac{1}{3}\left(\frac{h}{T_u}\right)^{-1}}\right] \tag{5}$$

Condition III:

$$k_{20} = \frac{qV}{2\pi h^2}\left[\frac{\ln\left(\frac{h}{r}\right)}{\left(\frac{h}{T_u}\right)^{-1} + \frac{1}{2}\left(\frac{h}{T_u}\right)^{-2}}\right] \tag{6}$$

where:

k_{20} = coefficient of permeability at 20 °C
h = height of water in the well
r = radius of well
q = discharge rate of water from the well for steady-state condition (determined experimentally, see example, fig. 7)
V = μT, viscosity of water at temp. T (see fig. 9) / μ_{20}, viscosity of water at 20 °C
T_u = unsaturated distance between the water surface in the well and the water table

15.3 The preferred metric unit for coefficient of permeability is cm/s (centimeters per second). The value of 1×10^{-6} centimeters per second is approximately the same as the inch-pound unit of 1 foot per year.

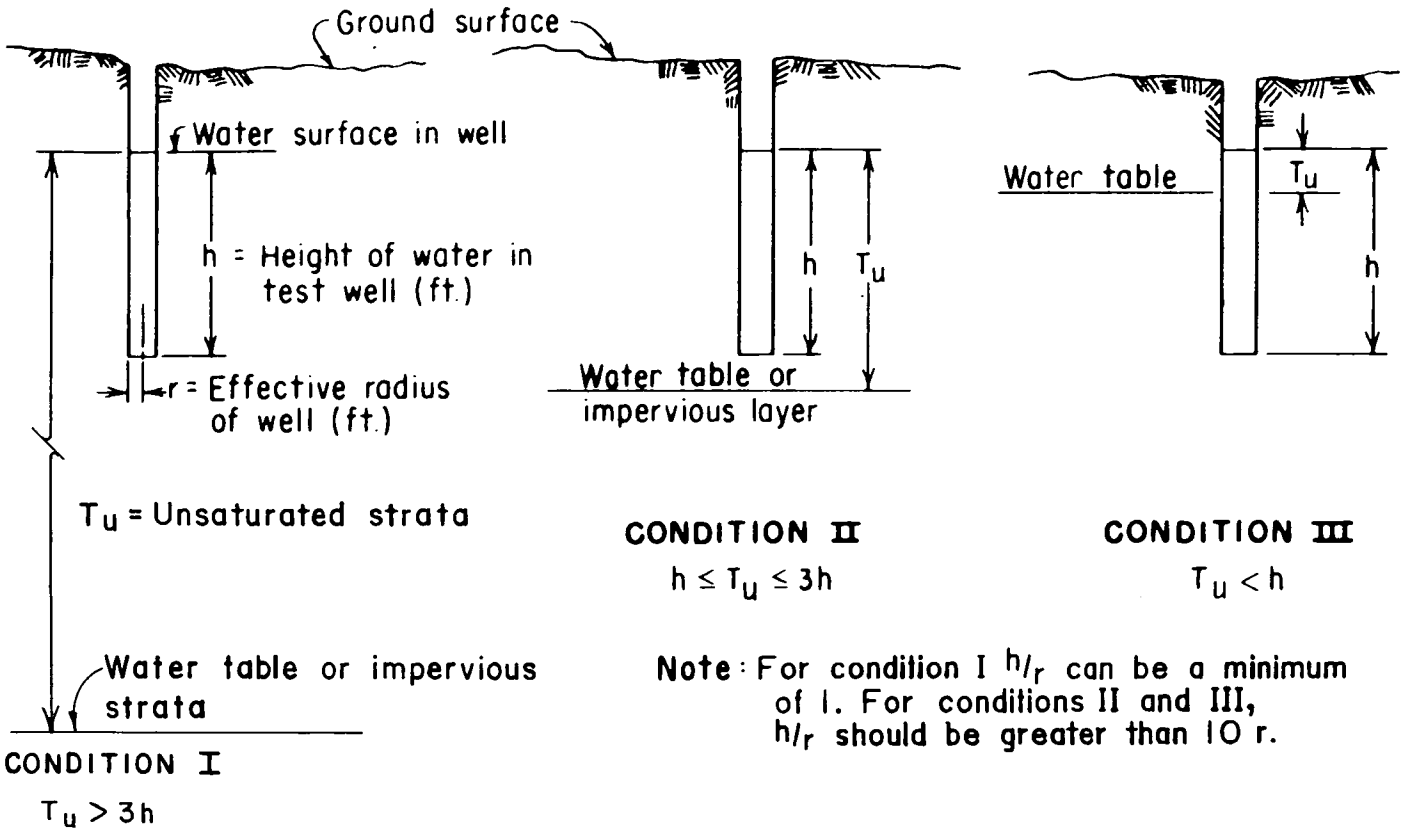

Figure 8. – Relationship between depth of water in test well and distance to water table in well permeameter test.

16. Report

16.1 The report is to consist of the following completed and checked forms:

"Well Permeameter Method (Soil Classifications and Well Dimensions)" (fig. 4).

"Well Permeameter Method (Time and Volume Measurements)" (fig. 6).

Time–Discharge Curve (example on fig. 7).

Calculation of coefficient of permeability from equations (4), (5), or (6).

16.2 All calculations are to show a checkmark and all plotting must be checked.

17. References

[1] *Drainage Manual*, 1st ed., Bureau of Reclamation, U.S. Government Printing Office, Washington, D.C., 1984.

[2] Zanger, Carl Z., *Theory and Problems of Water Percolation*, Engineering Monograph No. 8, (app. B "Flow from a Test Hole Located Above Groundwater Level," development by R. E. Glover) Bureau of Reclamation, Denver, Colorado, April 1953.

[3] Ribbens, R. W. "Exact Solution for Flow From a Test Hole Located Above the Water Table," (unpublished technical memorandum), Bureau of Reclamation, Denver, Colorado, 1981.

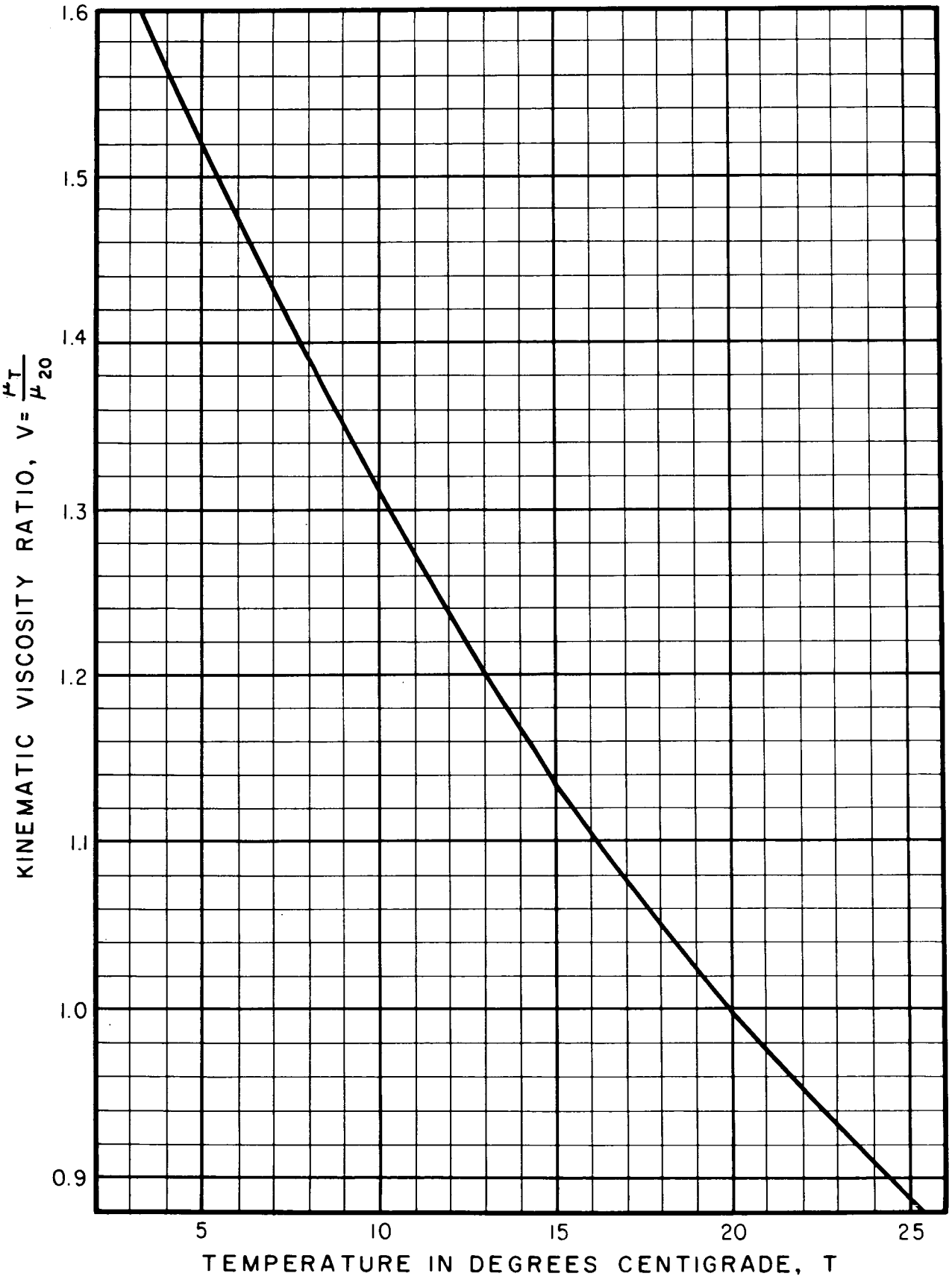

Figure 9. – Relationship between kinematic viscosity ratio of water and temperature.

UNITED STATES DEPARTMENT OF THE INTERIOR
BUREAU OF RECLAMATION

USBR 7305-89

PROCEDURE FOR

FIELD PERMEABILITY TEST (SHALLOW-WELL PERMEAMETER METHOD)

INTRODUCTION

This procedure is under the jurisdiction of the Geotechnical Services Branch, code D-3760, Research and Laboratory Services Division, Denver Office, Denver, Colorado. The procedure is issued under the fixed designation USBR 7305. The number immediately following the designation indicates the year of acceptance or the year of last revision.

1. Scope

1.1 This designation outlines the procedure for determining the coefficient of permeability, or a permeability index value, for natural or compacted soil layers overlying more pervious soils with no water table within the test layer.

2. Auxiliary Tests

2.1 An auger boring in accordance with USBR 7010 and soil classification by USBR 5005 should be made to determine the depth of the soil layer to be tested and to identify soils in the test layer and below the test layer.

3. Applicable Documents

3.1 *USBR Procedures*:
USBR 3900 Standard Definitions of Terms and Symbols Relating to Soil Mechanics
USBR 5005 Determining Unified Soil Classification (Visual Method)
USBR 7010 Performing Disturbed Soil Sampling Using Auger Boring Method
USBR 7300 Performing Field Permeability Testing by the Well Permeameter Method
3.2 *ASTM Standard*:
E 1 ASTM Thermometers

4. Summary of Method

4.1 The method consists of measuring the rate at which water, under a constant gravity head, flows out of a shallow uncased well into the soil layer for which the coefficient of permeability is to be determined. The coefficient of permeability, or an index value of permeability, can be calculated from values of (1) flow rate, (2) dimensions of the soil test layer and well, and (3) water temperatures.

5. Significance and Use

5.1 This test was developed to assist in evaluating soil lining performance in canals [1],* but it can be used for determining the coefficient of permeability in other soil layers. When duration of the test is sufficient to saturate an envelope of soil around and below the well as evidenced by constant flow, a coefficient of permeability can be determined. The coefficient, along with layer thickness and hydraulic head, can be used to calculate seepage through soil layers. When the coefficient of permeability of the soil is so low that it is not feasible to conduct the tests long enough to reach a steady-state condition, test results can be used as index values.

6. Terminology

6.1 Definitions are in accordance with USBR 3900.

7. Interferences

7.1 Proper use of the test depends upon soil characteristics which allow excavation of an uncased well of reasonably uniform dimensions with the soil around the well sufficiently undisturbed to allow unrestricted outward flow of water from the well.

7.2 Test results are adversely affected by using water containing sediment or if the granular backfill in the test well contains soil fines.

7.3 The test should be performed with ground and water temperatures above 0 °C. For cold weather conditions, a heated shelter should be used to maintain temperatures above freezing.

7.4 Temperature of the permeant water should be higher than ground temperature. This reduces the tendency for air dissolved in water from coming out of solution and becoming deposited in the soil voids causing an erroneously low coefficient of permeability.

8. Apparatus

8.1 *General Apparatus*:

8.1.1 *Auger.*–Hand auger or other tools for excavating the test well.

8.1.2 *Thermometer.*–0 to 50 °C, 1.0 °C divisions, conforming to the requirements of ASTM E 1.

8.1.3 *Truck.*–A tank truck or other means for conveying water to the test site of sufficient capacity to maintain a continuous supply of clean water to the test well.

* Number in brackets refers to the reference.

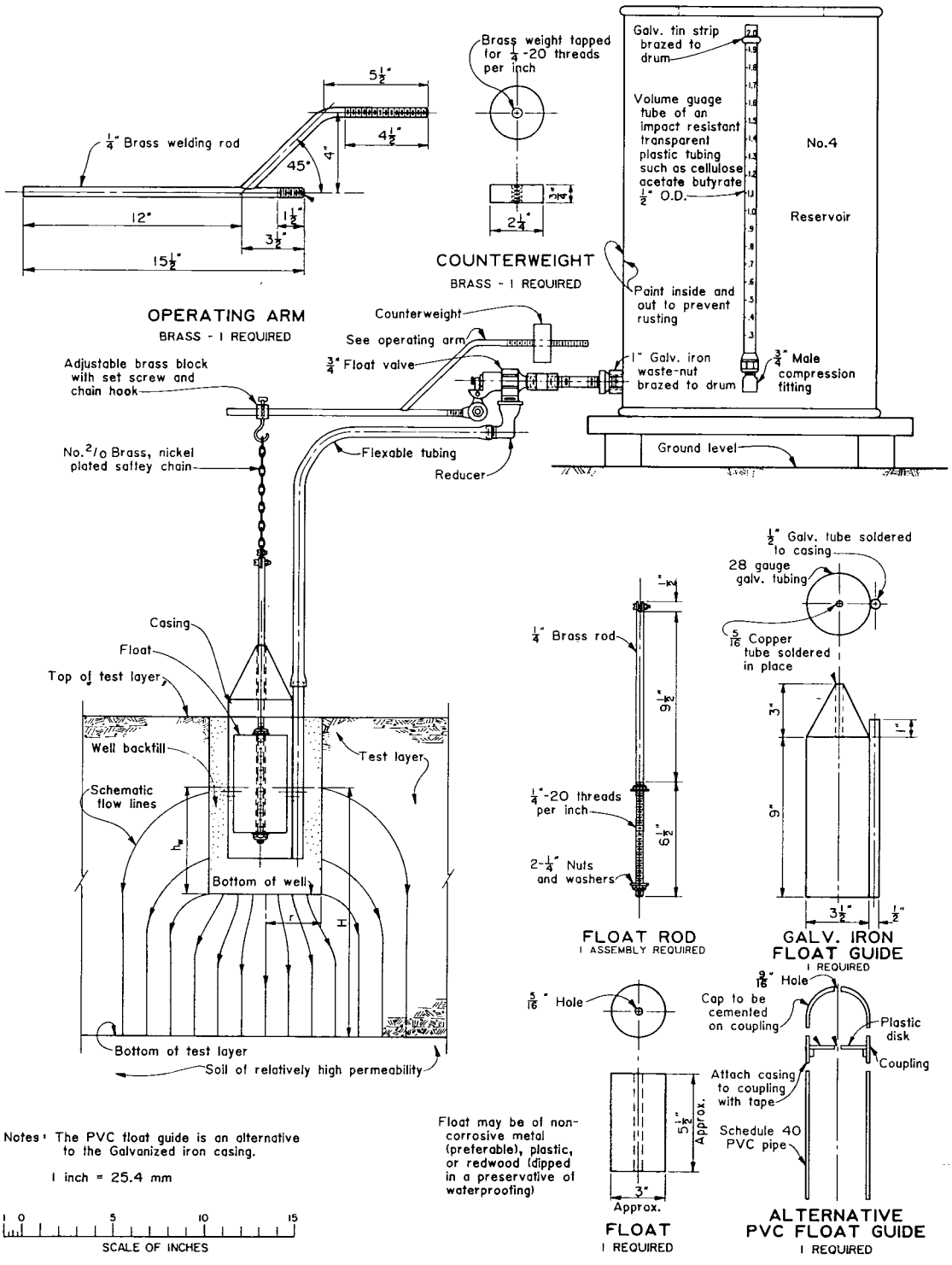

Figure 1. – Shallow-well permeameter test equipment. 101-D-352

8.1.4 *Tape.*–A pocket measuring tape.

8.1.5 *Straightedge.*–A wooden or metal straightedge longer than the well diameter.

8.1.6 Graduate.–1000-mL capacity.

8.2 *Equipment Unique to This Procedure* (fig. 1).

8.2.1 *Reservoir.*–A clean water tank with a cover; a capacity of about 60 L is sufficient for soils of low permeability. The reservoir should have a plastic volume tube gauge on which the water level in the reservoir is marked and that is calibrated to indicate the volume of water in the reservoir. Each reservoir and volume gauge tube should be labeled with corresponding numbers. A gauge tube of CAB (cellulose acetate butyrate) is durable and well suited for field use.

8.2.2 *Valve-Float Apparatus.*–An apparatus for regulating the flow of water from the reservoir to the test well to maintain a constant head of water in the test well. The apparatus consists of a valve connected to a float in the well which operates the valve. Although not required, a gate valve installed between the reservoir and the float valve is convenient.

8.2.3 *Float Casing.*–A casing with a guide for the float. The casing may be constructed of rust-resistant metal or plastic and the float of metal, plastic, or waterproof wood (fig. 1).

NOTE 1.–The valve-float apparatus and casing for this procedure are interchangeable with those for the field permeability test (well permeability method) in USBR 7300.

9. Reagents and Materials

9.1 *Water.*–Water for the permeability test is to be clean and free from sediment. The water should preferably be from the same source as that which will be seeping through the soil layer being tested when the project is in operation. This ensures that any chemical reactions between water and soil which affect permeability will be similar during the test and during seepage through the soil layer when operational.

9.2 *Backfill.*–Coarse sand or fine gravel is to be used to backfill the well. The backfill prevents the soil in the side of the well from sloughing and ensures an even distribution of water in the well. The backfill must be free of fine soil particles which could be carried into the side and bottom of the well and reduce the flow of water from the well. If necessary, the backfill should be washed to remove soil fines prior to use.

10. Precautions

10.1 *Safety Precautions.*–Normal precautions for fieldwork.

10.2 *Technical Precautions*:

10.2.1 In windy areas, protection from blowing soil may be required to prevent interference to operation of the valve-float mechanism.

10.2.2 In hot, dry climates, the test well, the reservoir, and the surrounding area should be covered to minimize evaporation.

10.2.3 The water reservoir should be checked for damage prior to use. A damaged reservoir should not be used since the calibrated volume of the damaged reservoir may not be the same as the calibrated volume before the damage.

10.2.4 The valve-float apparatus should be kept clean, inspected for wear, and checked for leakage. (See note 4 in subpar. 13.9.) Replace the valve if necessary.

10.2.5 The equipment must be protected from disturbance by animals.

11. Calibration of Water Reservoir

11.1 Install the volume gauge tube and the float valve on the reservoir.

11.2 Level the reservoir and fill it with clean water.

11.3 As water is withdrawn from the reservoir into a 1000-mL graduate, mark the volume gauge tube at the bottom of the meniscus in 5 to 10 mm intervals for reading volume of the reservoir in liters.

11.4 Remove the volume gauge tube from the reservoir.

11.5 Complete marking the volume gauge tube with figures denoting volumes.

11.5.1 Permanent marks can be made on a CAB tube with acetate base ink.

11.5.2 The volume gauge tube of CAB also can be permanently marked using India ink by the following procedure:

11.5.2.1 Roughen the tube surface with No. 000 steel wool.

11.5.2.2 Mark the tube with India ink.

11.5.2.3 Coat the tube with clear lacquer to preserve the marks.

11.6 Replace the volume gauge tube on the reservoir.

12. Conditioning

12.1 Not applicable, special conditioning requirements are not needed for this procedure.

13. Procedure

13.1 Before performing this test, determine the thickness of the soil layer to be tested to establish suitable dimensions (depth and diameter) for the test well. This should be done using a nearby test boring (hand auger boring). Visually classify the soils taken from the hole and prepare a drill hole log.

13.2 All data are to be recorded on the "Field Permeability Test (Shallow-Well Permeameter Method)" form as shown on figure 2. The data required include test location, thickness of layer being tested, soil classifications, well dimensions, and a record of water volume readings and time intervals.

13.3 Level the soil surface and excavate a well into the soil layer to be tested. The well can be of any convenient size and location in the soil layer. Generally, the minimum depth of layer to be tested should be about 150 mm. Do not excavate the well into the underlying soil layer.

NOTE 2.–The test can be performed in a thick, compacted lining of a canal side slope by first excavating a horizontal surface in the lining before starting the vertical well excavation. The reservoir can be placed on the excavated surface in the lining, or it can be set on a wooden support on the canal side slope opposite the well. The depth of the soil layer will be an average depth to the bottom of the lining at the center of the well.

13.4 After the well has been excavated, lightly brush or shave the sides and bottom of the well, where necessary, to remove any soil smeared on the well surfaces or any compaction caused by the excavation. Remove loose soil from the bottom of the well.

13.5 With the pocket measuring tape, make sufficient measurements to measure and record the diameter of the

7m-1710 (6-89)
Bureau of Reclamation

FIELD PERMEABILITY TEST (SHALLOW-WELL PERMEATER METHOD)

Designation USBR 7305 - 8 9

PROJECT	FEATURE	TEST LOCATION
Example	Example	Sta. 1494+16

TESTED BY	DATE	COMPUTED BY	DATE	CHECKED BY	DATE

SOIL CLASSIFICATIONS

RESERVOIR NO. 5

SOIL LAYER: SILTY CLAY : Approx. 85% fines with medium plasticity, slow dilatancy, medium dry strength, medium toughness; approx. 15% fine sand, moist, dark gray; easy to excavate; no reaction to HCL(CL-ML).

UNDERLYING SOIL: SILTY SAND : Approx. 60% fine to coarse, hard, angular sand; approx. 20% non-plastic fines; approx. 20% fine, hard, angular to subangular gravel; maximum size, 30mm; moist, brown, moderately hard to auger; slight reaction to HCL(SM).

TIME			RESERVOIR VOLUME (L)	VOLUME DIFFERENCE	ACCUMULATIVE DIFFERENCE	TEMPERATURE (°C)	
DATE	CLOCK	ACCUM (HRS)				WW	RW
3-2	1515	0.0	52.9	0	0	24	28
3-3	0748	16.55	32.0	20.9	20.9	24	25
3-3	1547	24.53	22.1	9.9	30.8	24	25
3-3	1550	24.58	55.2	----	----	--	--
3-4	0800	40.75	35.4	19.8	50.6	24	29
3-4	1500	47.75	27.2	8.2	58.8	24	28
3-5	0746	64.52	8.5	18.7	77.5	24	26
3-5	0748	64.55	56.0	----	----	--	--
3-5	1541	72.43	47.3	8.7	86.2	23	26
3-6	0812	88.95	29.1	18.2	104.4	24	25
3-6	1530	96.25	21.2	7.9	112.3	25	25
3-7	0830	113.25	3.2	18.0	130.3	24	25

RADIUS OF WELL, r (1) 0.212 m (2) 0.221 m (3) 0.218 m (4) 0.214 m Average 0.216 m

DEPTH OF TEST WELL (1) 0.460 (2) 0.465 (3) 0.462 (4) 0.464 Average 0.463 m

DEPTH OF WATER SOURCE TO BOTTOM OF TEST LAYER, H 0.619 m

HEIGHT OF WATER IN WELL, h_w 0.338 m

$\alpha = \frac{r}{H} = 0.35$ $\beta = \frac{h_w}{H} = 0.55$ C = 0.28 V = 0.91

$q = \frac{130.3-104.4}{24.3} \times 1000^* = 1100$ cm³/hr $k = \frac{(C)(V)(q)}{(H)^2 \; 3600^*} = 2.0 \times 10^{-5}$ cm/s

*CONTANTS: 1000 = convert L to cm³ WW = well water
3600 = convert hours to seconds RW = reservoir water

Figure 2. – Field permeability test (shallow-well permeameter method) — example.

well and its depth—using a straightedge placed across the top of the well at the ground surface—from that surface to the bottom of the well. A minimum of four measurements each for the diameter and well depth are required. Calculate and record the average radius and average diameter of the well.

13.6 By pouring, refill the well with backfill to hold the casing and float firmly in place. Position the casing with float vertically in the backfill so there is ample depth inside for the float to operate.

13.7 Set up and level the water reservoir on blocking or other firm support in an area adjacent to the test well (see fig. 3).

13.8 Assemble the valve-float apparatus extending from the reservoir to the test well. Adjust the counterweight toward the reservoir to keep the float valve closed.

NOTE 3.–In hot climates with low humidity, cover an area about 1-m radius of the ground around the well with plastic sheeting to reduce evaporation from the area surrounding the well.

13.9 With the float valve closed, fill the reservoir. Record the volume of water in the reservoir. Slowly fill the well with water and adjust the valve-float apparatus to balance the float in the water.

NOTE 4.–The float valve may leak around the plunger during periods of high flow, especially during initial filling of the test well. Leakage does not affect permeability test results until the flow envelope in the soil is developed, and the flow becomes relatively constant. If leakage persists during the test, the test sometimes can be salvaged by saving the leakage in a container and pouring it back into the reservoir.

13.10 With a pocket measuring tape, measure the depth—using a straightedge placed across the top of the well at the ground surface—from that surface to the water surface in the well. Calculate the water height in the well as the difference between the depth from ground surface to water surface and to the well bottom. (Refer to subpar. 13.5 and fig. 4.) Record water height in well as h_w.

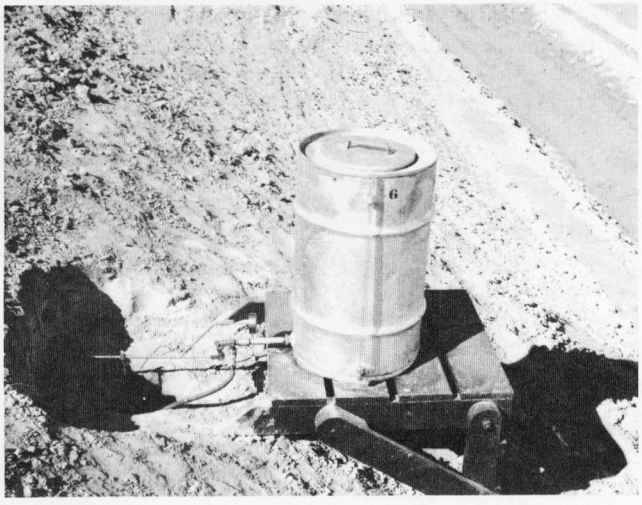

Figure 3. – Shallow-well permeameter installed in the compacted earth lining of a canal side slope.

13.11 Record at convenient intervals—with the frequency depending on the flow rate—time, volume of water in the reservoir, and water temperatures in the well and in the reservoir (see fig. 2).

13.12 After the test has been in progress for several hours, and as necessary thereafter during the test, calculate the approximate minimum time, t, required to develop a saturated soil envelope around the well (steady-state conditions) by the following equation (see example in subpar. 14.3):

$$t = \frac{H}{k}\left[(1 - \beta) + (\beta \ln \beta)\right] \qquad (1)$$

where:

t = time in hours
H = the distance from the water surface in the well to the bottom of the soil test layer, cm
k = coefficient of permeability in cm/s, as calculated at time intervals during the test (see equation 2)
β = a function of H (see fig. 4) = $\frac{h_w}{H}$
ln = natural logarithm

NOTE 5.–Initial flow rates from the well are usually erratic and the test should be continued until the flow rate becomes relatively uniform as determined by periodic calculations. For small coefficients of permeability, the required test duration could be a matter of months and might be impractical for complete development of steady-state conditions. In that event, the test can be terminated at the end of a 5- to 10-day period and the average flow rate over the last 24 hours used to calculate an unsaturated coefficient of permeability. Such a coefficient is not the true coefficient of permeability; however, it is considered a permeability index value. If permeability tests are performed at later dates, using the same procedure for the same test duration, the index values would indicate relative changes in coefficient of permeability. In the case of a canal or reservoir lining, these changes would indicate increases or decreases in seepage to aid in an evaluation of lining performance. When the test duration is sufficient for complete development of the flow envelope (steady-state conditions) for determination of a coefficient of permeability, use the flow rate obtained after the minimum time calculated from equation 1.

13.13 After the test has been terminated, remove the apparatus and auger a hole from the well bottom to the bottom of the soil layer being tested to confirm that the thickness of the soil layer tested was as expected from the initial sampling hole. If the thickness is not the same, recalculate the coefficient of permeability using the thickness measured at the well.

14. Calculations

14.1 Refer to the definition sketch on figure 4 and the example on figure 2.

14.2 *Coefficient of Permeability*:

H = depth from water surface in the well to bottom of the soil layer being tested, cm

r = radius of well, cm

h_w = height of water in well, cm

α = ratio of r to $H = \frac{r}{H}$

β = ratio of h_w to $H = \frac{h_w}{H}$

14.2.1 Calculate α and β.

14.2.2 From the chart on figure 4, determine the values of α, β, C, where C is a well coefficient. Solve for C.

14.2.3 Calculate the coefficient of permeability.

$$k_{20} = CV\left(\frac{q}{H^2}\right) \qquad (2)$$

where:

k_{20} = coefficient of permeability at 20 °C

V = viscosity ratio correction for adjusting the permeability value to a 20 °C base and is equal to $\frac{\mu_T}{\mu_{20}}$

It is obtained from figure 5 for a measured field wellwater temperature T in °C and μ equals the viscosity of water.

q = average rate of flow during the last 24 hours of test, $\frac{\text{volume}}{\text{time}}$

14.3 *Test Duration Computations.*–The following is an example of computations to determine the test duration required to develop a saturated flow envelope (steady-state condition) in the soil needed as a basis for a valid calculation of coefficient of permeability. The values for the computations are from the records of: time, accumulative flow volumes, and well dimensions shown on figure 2.

14.3.1 *Test Period.*–The time from 0812 on 3/6 (date) to 0830 on 3/7 equals 24.30 hours.

14.3.2 *Accumulative Flow.*–The accumulative flow during the corresponding period equals 130.3 L – 104.4 L = 25.9 liters.

$$\text{Flow rate, } q \text{ (during period)} = \frac{25.9 \text{ L}}{24.30 \text{ h}} = 1.1 \text{ L/h}$$

$$q = 1100 \text{ cm}^3/\text{h}$$

14.3.3 *Permeability Computation*:

H = 61.9 cm from fig. 2

α = 0.35, β = 0.55, and C = 0.28 from fig. 4

V = 0.91 for a temperature of 24 °C from fig. 5

$$k_{20} = CV\frac{q}{H^2} = \frac{(0.28)\ (0.91)\ (1100 \text{ cm}^3/\text{h})}{(61.9 \text{ cm})^2\ (3600 \text{ s/h})}$$

$k_{20} = 2.0 \times 10^{-5}$ cm/s

14.3.4 *Test Duration*:

$$t = \frac{H}{k}\ [(1 - \beta) + (\beta \ln \beta)]$$

$$t = \frac{61.9 \text{ cm}}{(2.0 \times 10^{-5} \text{ cm/s})\ (3600 \text{ s/h})} \times [(1 - 0.55) + (0.55 \ln 0.55)]$$

t = 104.2 hours

Since the test at time 0830 (on 3/7) had been run for 113.25 hours, the flow envelope should be developed yielding a final value of q (1100 cm³/h) and a calculation of coefficient of permeability of 2.0×10^{-5} cm/s (see fig. 2).

15. Report

15.1 The report is to consist of a completed and checked "Field Permeability Test (Shallow-Well Permeameter Method)" form (fig. 2.)

15.2 All calculations are to show a checkmark.

16. Reference

[1] Moody, W. T., H. B. Phillips, and I. E. Allen, "Coefficients for Field Permeability Tests of Soil Canal Linings," Technical Engineering Analysis Section, Photoelastic Analysis Unit, Report No. 33, Bureau of Reclamation, Denver, Colorado, November 1, 1955.

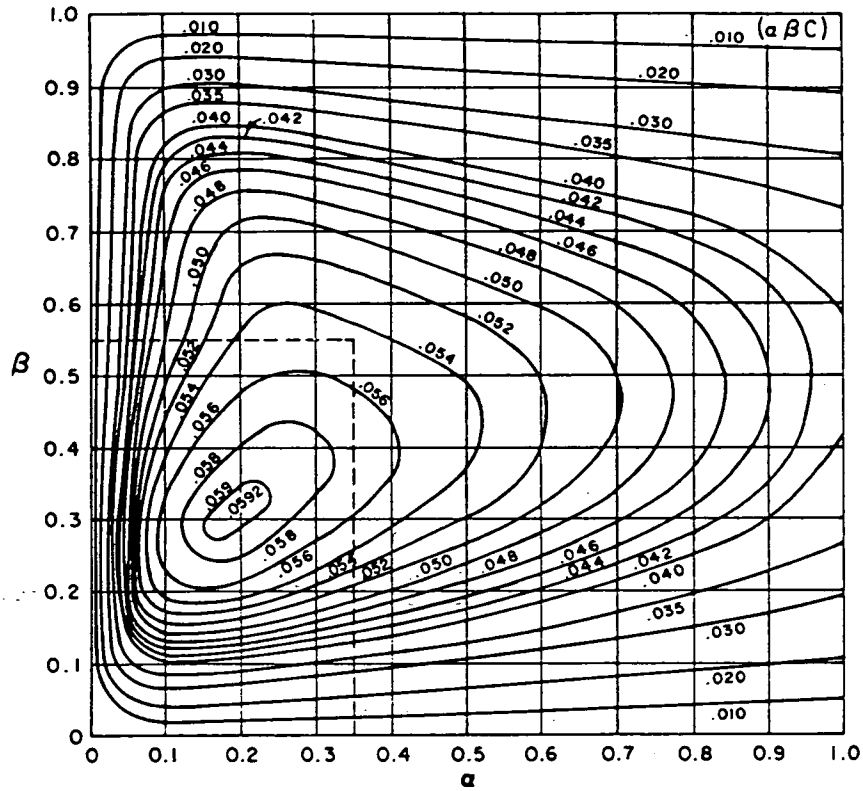

CHART OF $(\alpha\beta C)$ AS A FUNCTION OF α AND β

NOTES

As α approaches 0 the value of C increases without limit.
At $\alpha = 0$ the test becomes meaningless since no well exists.
As β approaches 0, C approaches $1/\pi\alpha^2$.
For $\beta = 1$, $C = 0$ and the test is again meaningless since the well would bottom in the pervious material of relatively high permeability.

EXAMPLE CALCULATION

From the example in Figure 2:
$\alpha = 0.35$, $\beta = 0.55$
From chart above (dashed line)
$\alpha\beta C = 0.0543$. solving for C

$$C = \frac{0.0543}{(0.35)(0.55)} = 0.28$$

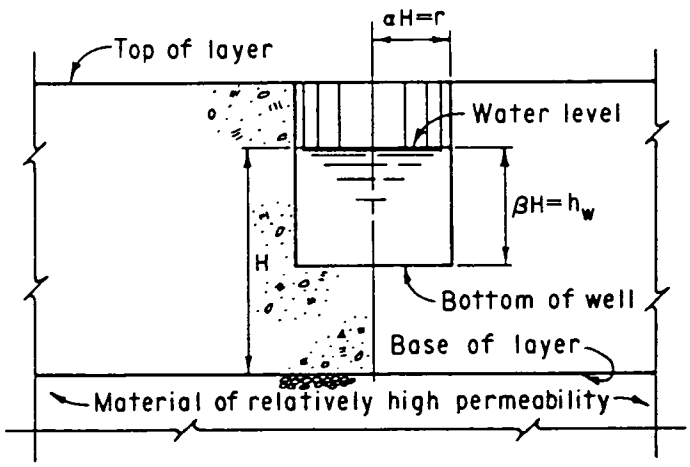

DEFINITION SKETCH

Figure 4. – Determination of factors for calculation of coefficient of permeability.

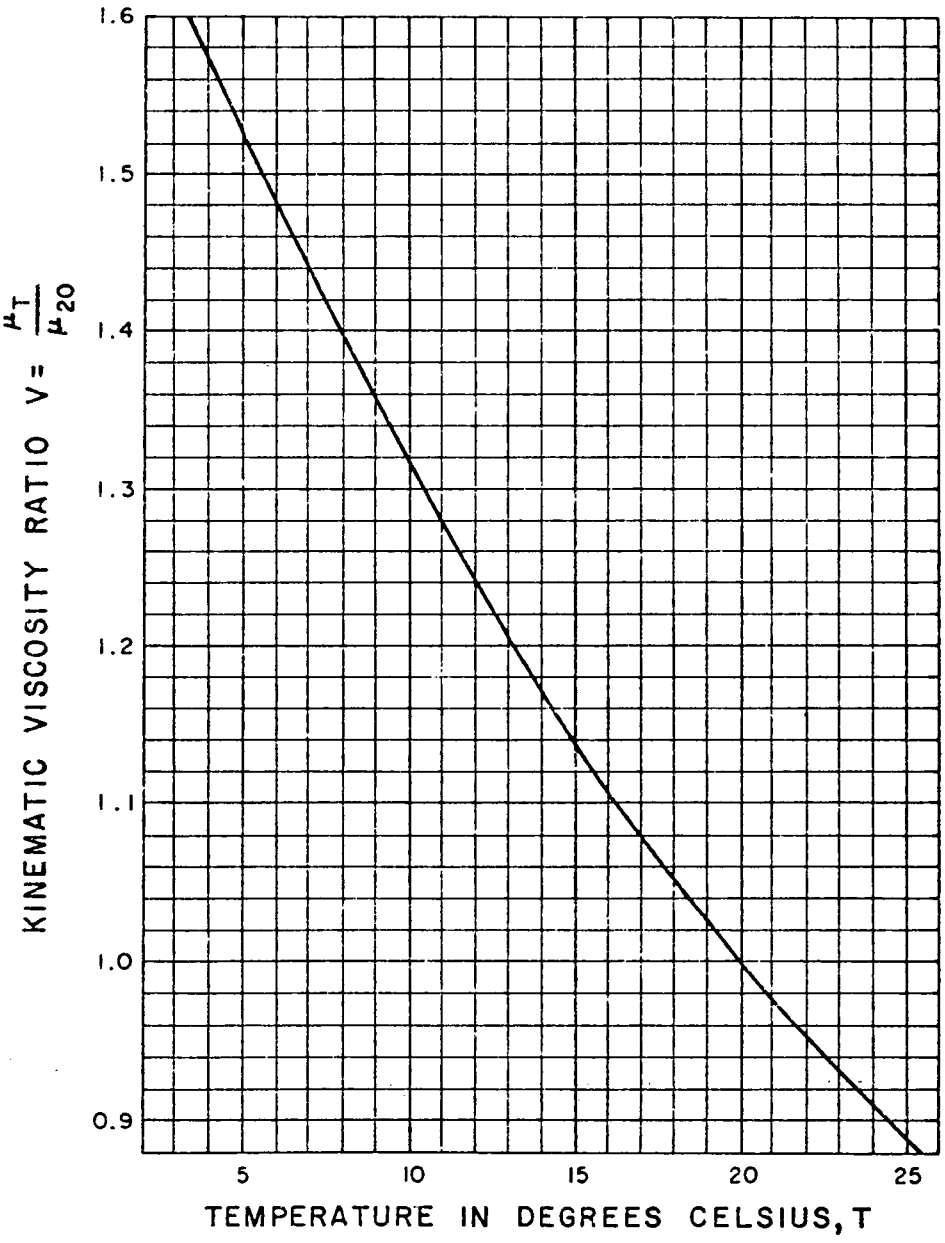

Figure 5. – Relationship between kinematic viscosity ratio of water and temperature.

UNITED STATES DEPARTMENT OF THE INTERIOR
BUREAU OF RECLAMATION

USBR 7310-89

PROCEDURE FOR

CONSTANT HEAD HYDRAULIC CONDUCTIVITY TESTS IN SINGLE DRILL HOLES

INTRODUCTION

This procedure is under the jurisdiction of the Geotechnical Services Branch, code D-3760, Research and Laboratory Services Division, Denver Office, Denver, Colorado. The procedure is issued under the fixed designation USBR 7310. The number immediately following the designation indicates the year of acceptance or the year of last revision.

Although the term "permeability" was used in all other procedures in this manual pertaining to the capacity of rock or soil to conduct a liquid, the similar term "hydraulic conductivity," is used throughout this procedure. (See designation USBR 3900 for differences in meaning of the two terms.)

Since geologic and hydrologic conditions encountered during drilling are not always predictable and may not be ideal, variations from this procedure may be necessary to suit the particular purpose of the test, and conditions at the test site. Much of the information for this procedure was taken from references [1] through [5],[1] which contain additional information on field hydraulic conductivity testing.

1. Scope

1.1 This designation outlines the procedure for performing tests to determine an approximate value of hydraulic conductivity (permeability) of soil or rock in an isolated vertical or inclined interval of a drill hole (borehole), either above or below the water table. Usually, the tests are performed as a part of the drilling program. This procedure can be used in holes of various diameters if suitable equipment is available, but N-size [3-in (76-mm)] nominal diameter drill holes are most commonly used.[2]

1.2 The constant head, single drill hole test is based on the same theories as the steady-state or Theim-type aquifer test; and the same assumptions are made. These assumptions are: (1) the aquifer is homogeneous, isotropic, and of uniform thickness; (2) the well (test interval) fully penetrates the aquifer and receives or delivers water to the entire thickness; (3) discharge or inflow is constant and has continued for a sufficient duration for the hydraulic system to reach a steady state; and (4) flow to or from the well is horizontal, radial, and laminar. Field conditions may not meet all of these assumptions. Equations and other factors affecting the test are given in paragraph 14., *Calculations*. This procedure should not be used for testing toxic waste containment that requires a very low loss of liquid.

1.3 Constant head hydraulic conductivity tests should be considered scientific tests. Great care should be exercised by those conducting the tests to eliminate as much error as possible.

[1] Number in brackets refers to the reference.
[2] Hereafter referred to as N-size holes.

2. Auxiliary Tests

2.1 The soil or rock penetrated by the drill hole should be identified, described, and classified from samples taken during the drilling operation. Soil can be sampled in accordance with USBR 7010, 7015, or 7105 and classified in accordance with USBR 5000. Rock cores or cuttings should be examined and appropriate description and classification made. Data obtained from the drill hole should be entered on appropriate log forms.

3. Applicable Documents

3.1 *USBR Procedures*:
USBR 1040 Calibrating Pressure Gauges
USBR 1050 Calibrating Pressure Transducers
USBR 3900 Standard Definitions of Terms and Symbols Relating to Soil Mechanics
USBR 5000 Determining Unified Soil Classification (Laboratory Method)
USBR 5005 Determining Unified Soil Classification (Visual Method)
USBR 5600 Determining Permeability and Settlement of Soils [8-in (203-mm) Diameter Cylinder]
USBR 5605 Determining Permeability and Settlement of Soils Containing Gravel
USBR 7010 Performing Disturbed Soil Sampling Using Auger Boring Method
USBR 7015 Performing Penetration Resistance Testing and Sampling of Soil
USBR 7105 Performing Undisturbed Soil Sampling by Mechanical Drilling Methods
USBR 7300 Performing Field Permeability Testing by the Well Permeameter Method

3.2 *USBR Document*:

3.2.1 Geology for Designs and Specifications by the Bureau of Reclamation. (This document covers both soil and rock.)

4. Summary of Method

4.1 *Pump-In Test.*–Water is injected into an isolated interval of a drill hole in soil or rock, and the volume of water injected is determined for a measured period of time. The injection pressure is a constant gravity head, with or without added pressure head provided by a hydraulic pump. The hydraulic conductivity is calculated from the flow rate, length and radius of test interval in the drill hole, and effective head.

4.2 *Artesian Test.*–Where water under artesian pressure flows out of the drill hole, the effective (shut-in) head at the test interval is measured and the hydraulic conductivity calculated from the flow rate, the length and radius of the well, and the effective head.

5. Significance and Use

5.1 Hydraulic conductivity tests are made to obtain data related to (a) identifying seepage potential and dewatering requirements, (b) drainage problems, (c) ground-water supply investigations, and (d) grouting requirements. The tests yield approximate values of hydraulic conductivity that are suitable for many engineering purposes. Reliability of the values obtained depends primarily on (a) homogeneity of the strata tested, (b) suitability of test equipment used for a given condition, (c) care taken in performing the test, and (d) adherence to requirements for proper use of the equations. The test is also used in formulating geologic descriptions and interpretation of material properties, particularly where there is poor sample recovery.

5.2 Where tests are performed in fractured rock, results could reflect secondary conductivity rates which would not represent primary conductivity of the intact mass. When the test is performed in fractured, brittle, swelling clay or rock, or where fractures contain loose material, hydraulic conductivity may be reduced and judgment should be used in applying results.

5.3 Generally, this procedure is suitable for materials in which the hydraulic conductivity ranges between 5 and 100,000 ft/yr (5×10^{-6} and 1×10^{-1} cm/s) and where results are to be used for engineering purposes. The procedure is not applicable in materials of lower permeability, particularly for purposes such as investigations for containment of toxic wastes.

6. Terminology

6.1 Definitions are in accordance with USBR 3900. Some definitions are from *Glossary of Geology* [6].

6.2 Terms not included in USBR 3900 specific to this designation are:

6.2.1 *Drill Hole.*–A circular hole made by drilling.

6.2.2 *Feed Pipe* (conductor pipe, injection pipe, riser pipe, drop pipe).–The main pipe (or rod) which conducts water from the collar of the hole into the test interval in the drill hole for the hydraulic conductivity test.

6.2.3 *Bailer.*–A cylindrical container with a valve on the bottom for admission of fluid, attached to a line and used for recovering and removing water, cuttings, and mud from a drill hole.

6.2.4 *Walking Beam.*–An oscillating rigid lever balanced on a fulcrum used to activate the cable in cable-tool drilling by alternating up and down motion.

6.2.5 *Aquifer.*–A water-bearing bed or stratum of earth, gravel, or porous rock with interconnected openings or pores through which water can move.

6.2.6 *Packer.*–A short expansible device deliberately set in a drill hole to prevent upward or downward fluid movement; generally for temporary use. The expansible part of the packer is called the gland. Straddle packers are two packers separated by a length of perforated pipe to span or straddle a test interval.

6.2.7 *Artesian.*–An adjective referring to ground water under hydrostatic pressure; i.e., an artesian aquifer is a confined aquifer. Artesian ground water rises above the confining layer in the drill hole and may or may not flow at ground surface.

6.2.8 *Ground Water.*–That part of the subsurface water that is in the zone of saturation.

6.2.9 *Water Table.*–The surface between the zone of saturation and the zone of aeration; that surface of a body of unconfined ground water at which the pressure is equal to that of the atmosphere.

6.2.10 *Perched Water Table.*–A water table, usually of limited area, maintained above the normal free water elevation by the presence of an intervening relatively impervious confining stratum.

6.2.11 *Gauge Saver.*–A vessel, with a pressure gauge, filled with glycerin or oil to protect the gauge from direct contact with fluid in the pressure line (see fig. 1).

6.2.12 *Holding Pressure* (applicable primarily for grouting).–The gauge pressure after the water-pumping system has been shut off at the valve ahead of the gauge and backflow is prevented.

6.2.13 *Back Pressure* (applicable primarily for grouting).–The gauge pressure in the system after the holding pressure has dissipated as determined by opening a valve and allowing the gauge to drop to zero, and then reclosing the valve.

6.2.14 *Backflow* (applicable primarily for grouting).–The reverse movement of water out of the drill hole when the holding and/or back pressure below the packers exceeds the pressure of the water column in the hole.

7. Interferences

7.1 During drilling, it is important to minimize movement of fines [minus No. 200 sieve-size material (75 μm)] into the material being tested and to remove any accumulation of fines from the wall of the drill hole during preparation for the test, so as to avoid obtaining test values

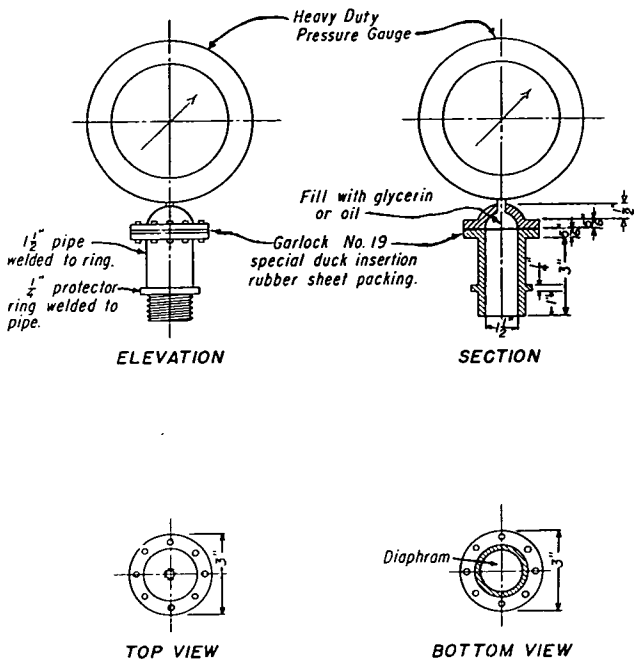

Figure 1. – Gauge saver device for protecting pressure gauge.
40-D-4287

lower than the actual hydraulic conductivity of the material being tested. Drilling using clear water without additives is preferred. Bentonitic muds should not be used in holes where hydraulic conductivity testing is to be performed. Biodegradable additives may be used if necessary, but only if the test interval is adequately cleaned before testing. The drilling procedure should be documented on the log form.

7.2 Test results can be adversely affected by injecting water containing sediment which would tend to plug voids in the material being tested.

7.3 The temperature of the injected water should be equal to or warmer than that of the ground or ground water. This reduces the tendency of air dissolved in the water to become entrapped in the voids of the material being tested and to cause low values of hydraulic conductivity. In most areas not affected by artesian conditions, the temperature at a depth of about 25 feet (8 m) below the ground surface remains relatively constant at the annual mean air temperature for the region. At significantly greater depths, temperature rises about 1 °F (0.6 °C) for each 500 to 1,000 feet (150 to 300 m) of depth. The temperature of the injected water, especially if it is known to be colder than the ground-water temperature, should be recorded on a geologic log, or the hydraulic conductivity test data forms (see subpar. 8.12 for suitable temperature measuring devices).

7.4 It is possible that dissolved minerals in the water used for a test may react chemically with substances in the material being tested to cause a change in the hydraulic conductivity. Therefore, it is desirable to use water for the test that is similar in quality to that expected to permeate the ground when the project is in operation.

8. Apparatus

8.1 *Drill Rigs* (see fig. 2):

8.1.1 *Rotary Drilling.*–A drilling method resulting in grinding a hole with a hard-toothed drill bit at the end of a rotating drill rod (pipe). The equipment consists essentially of a power unit, hoisting or tugging unit, controlled-feed rotary drill head and mounting frame, mast or tripod, and circulating pump. The rig should have various accessory drilling and sampling equipment (rods, bits, core barrels, augers), as required for drill hole advancement, sampling, and testing.

8.1.2 *Cable Tool Drilling.*–A method of drilling in which the material at the bottom of the hole is broken up by a steel bit with a blunt, chisel-shaped cutting edge. The drilling equipment consists essentially of a mast, a string of drill tools (casing, tubing, or pipe, of one size) that is alternately lifted and dropped by a hoist with a power unit, and a walking beam. A bailer is always used with a cable tool rig. Normally, a cable tool drilled hole is not satisfactory for hydraulic conductivity testing with packers.

8.2 *Injection Pump.*–A centrifugal or helical screw type pump providing a constant water flow is required. This may require a special pump separate from that used for drilling operations. Although there may be conditions where a larger or smaller pump may be required, high-quality pumps having a capacity of 40 gal/min (150 L/min) at a pressure of 120 lbf/in^2 (830 kPa) (such as Monyo model 3L-8 manufactured by the Robbins and Myers Company, Springfield, Ohio, or equivalent) are adequate for most hydraulic conductivity tests. The pump should provide the required flow at the required constant pressure with maximum allowable pressure fluctuation—due to pumping pulsations—of ±5 percent of the test gauge pressure. A surge chamber is required for all testing; this minimizes pulsations which can affect the injection rate in the test interval. Also, it makes readings more accurate and protects the pressure gauges against damage from sudden pressure changes.

8.3 *Feed Pipe.*–The feed pipe should be of adequate diameter to minimize head losses and have adequate tensile strength to withstand pumping pressures and stresses during hoisting or tugging. The feed pipe is commonly a threaded and coupled assembly of pipe or tubing having a uniform inside diameter. Drill rods, generally of N-size, can be used without seriously affecting reliability of test data if the flow rate to the test interval does not exceed about 15 gal/min (57 L/min) and the depth to the top of the interval does not exceed 50 feet (15 m).

NOTE 1.–Use of drill rods as feed pipe should be permitted only after the assembled drill rod string has been pressure tested to calibrate head losses at anticipated flows. If seals or sealing materials are used during calibration, the same type of seals or sealing materials (not oils or wax) should be used during hydraulic conductivity testing.

8.4 *Flowmeters.*–One or more calibrated flowmeters are required; the capacity of each meter should be specified.

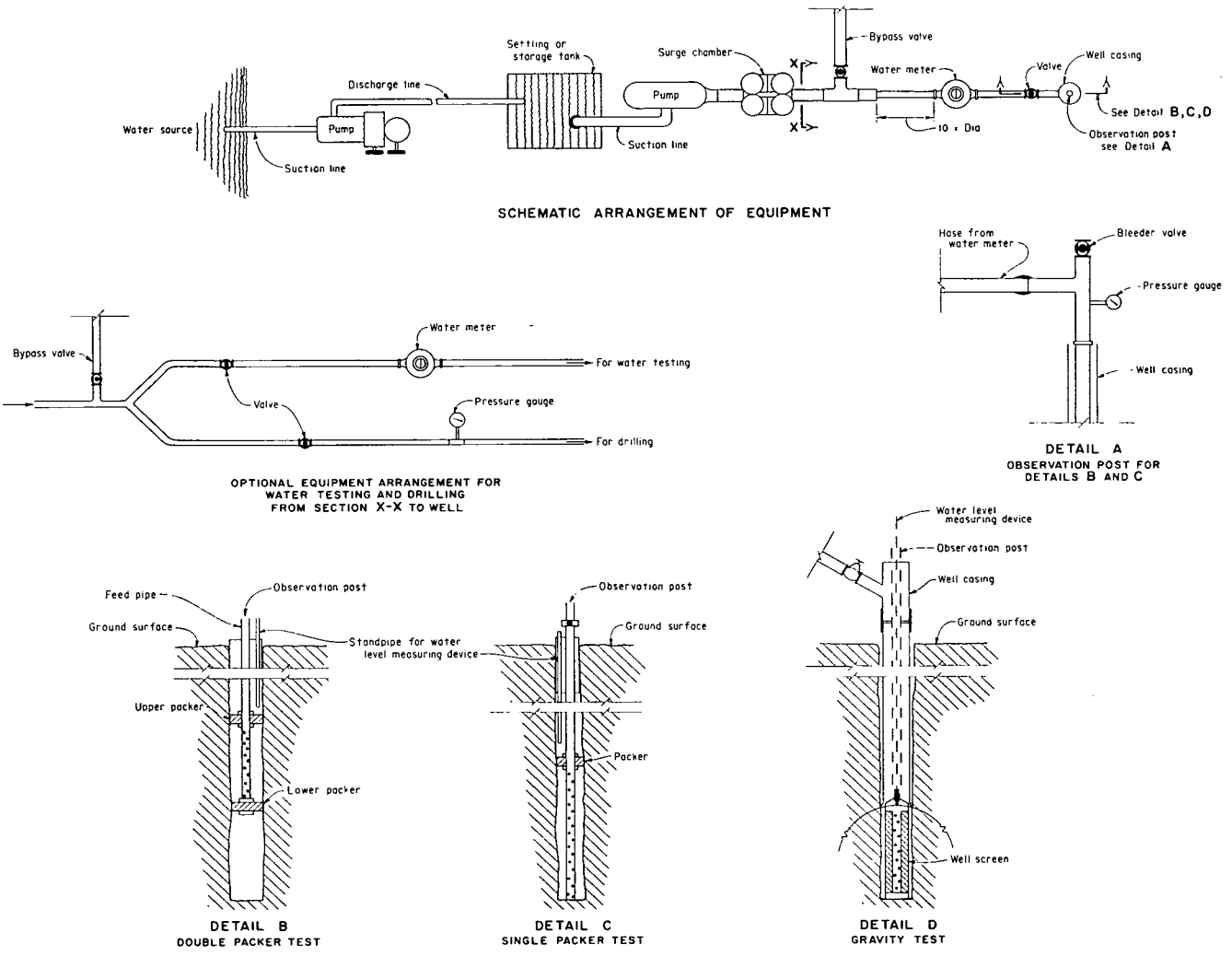

Figure 2. - Schematic arrangement of hydraulic conductivity equipment. 801-D-111

For flows up to 50 gal/min (200 L/min), a 1-inch (25-mm) diameter disk-type meter may be used. For higher flows, a 2- or 2-1/2-inch (50- or 65-mm) diameter impeller-type meter is recommended.

8.4.1 A straight uninterrupted section of pipe having an inside diameter equal to the rated size of the meter and a minimum length 10 times the inside diameter of the pipe should be provided upstream of the meter. Manufacturers commonly recommend pipe lengths of one to two times the inside diameter of straight pipe downstream from the meter.

8.5 *Pressure Sensors.*–Where required, calibrated pneumatic piezometers or electrical transducers can be used as down-hole sensors to measure pressures at the test interval during a hydraulic conductivity test. Down-hole sensors are preferred over the method of calibrating the piping system for head loss between a pressure gauge on the surface and the test interval. However, an above-ground pressure measurement can provide a check of the pressure sensor.

8.5.1 *Pneumatic Piezometers.*–A down-hole pneumatic piezometer system has been developed [7]. Descriptions of the equipment and procedure, as used at two damsites, are presented in appendix X1.

8.5.2 *Electrical Transducers.*–Electrical transducers have been used as down-hole pressure sensors by other agencies [8], particularly for very low hydraulic conductivities [below 1 ft/yr (1×10^{-6} cm/s)]. The USBR has used electrical down-hole sensors in preliminary trials. Electrical transducers measure pressures more accurately than pneumatic piezometers and can be connected to a strip-chart recorder for a continuous record. However, transducers are considered less rugged for field use and require more maintenance and experienced personnel to operate than do pneumatic piezometers.

8.6 *Pressure Gauges.*–When down-hole pressure sensors are not available or sensors are not working properly, calibrated pressure gauges can be used to estimate effective pressure in the test interval after correcting for friction loss through the feed pipe and packer. All pressure

gauges used in water testing should be high-quality, stainless steel, glycerin or oil filled, with pressure indicated in both lbf/in² and kPa (such as manufactured by Marsh Instrument Company, a unit of General Signal, P O Box 1011, Skokie, Illinois; or equal). Pressure gauge ranges should be compatible with testing requirements; they should be sized so that the gauge capacity does not exceed two to three times the maximum desired pumping pressure for each respective pumping stage. Gauges should have the smallest graduations possible and an accuracy of ±2.5 percent over the total range of the gauge. If a gauge saver is used with the gauge, calibration should be made with the gauge saver in place. Accuracy of the gauges should be checked before use and periodically during the testing program (see subpar. 11.2 for additional information).

8.6.1 One or more pressure gauges should be located downstream of the flowmeter and downstream of any valves at the top of the feed pipe. This location for pressure measurement can be used by inserting a sub (adaptor, or short piece of pipe) with the gauge — installed on the top of the feed pipe.

8.6.2 At least one additional calibrated replacement gauge should be available at the test site.

8.7 *Swivel.*–During the hydraulic conductivity test, it is preferable to eliminate the swivel and use a direct connection to the feed pipe. If a swivel must be used in the water line during testing, it should be of the nonconstricting type and calibrated for head loss. Significant friction loss can result from use of the constricting type.

8.8 *Packers.*–One or two (straddle) packers are required for the test. Packers may be either bottom-set mechanical, screw set mechanical, pneumatic inflatable, or liquid inflatable. The pneumatic inflatable packer is the preferable type for general use and is usually the only one suitable for use in soft rock and soil. The gland of this packer is longer and more flexible than the other types and will form a tighter seal in an irregular drill hole. A leather cup type of packer should not be used. To ensure a tight water seal, the length of contact between each expanded packer and the drill hole wall should not be less than three times the drill hole diameter.

NOTE 2.–More than one type of packer may be required to test the complete length of a drill hole. The type of packer used depends upon many factors, e.g., rock type, drill hole roughness, spacing and width of rock joints, and test pressures.

8.8.1 *Inflatable Packers.*–Inflatable packers with an expansible gland and a floating head (see app. fig. X1.2) should be designed for anticipated drill hole diameters and pressure conditions. For normal hydraulic conductivity testing, a reasonable maximum recommended working pressure inside and outside of the packer is 300 lbf/in² (2070 kPa) [8]. Inside pressure should be increased in water-filled holes, proportionally to the static head. For drill holes with sharp projections in the walls, a wire-reinforced packer gland having a higher working pressure [7] may be required. The pressure in the packer should not be high enough to fracture the material being tested. The pressure required to form a tight seal at the ends of a test interval depends on the flexibility of the gland, the friction of the floating head, and the drill hole roughness. The minimum differential pressure between the packer and the test interval can be determined by testing packers in a pipe slightly larger than the nominal diameter of the drill hole, in order to simulate possible enlargement of the drill hole during drilling. For a given test interval pressure, the packer pressure is increased until it provides a watertight seal between the packer and the material with which it is in contact. The pressure in the packer should range approximately between 30 and 300 lbf/in² (210 to 2100 kPa) greater than that in the test interval, with 100 lbf/in² (690 kPa) being normal. Pneumatic inflatable packers can be inflated with compressed air or compressed nitrogen.

8.8.2 Special pneumatic packers are available for use in wireline drilling operations. Because the packers must be able to pass through the wireline bit and then expand to completely seal the hole at the test interval, special materials are needed for the packer gland. A special packer assembly—consisting of two packers in tandem—is used with the upper packer being expanded inside the drill rod, just above the bit, and the lower packer expanded against the wall of the hole just below the bit. The two packers on the assembly can be positioned properly—relative to the bit—by a set of lugs or a ring located on the assembly. Special seals or connections are needed to attach the water supply to the wire-line drill pipe at the surface.

8.8.3 A minimum of two sets of replacement packers and/or spare glands should be available at the test site.

8.9 *Perforated Pipe Sections.*–Lengths of perforated steel pipe corresponding to the lengths of test intervals, are required between packers to admit water into the test intervals. The total area of all perforations should be greater than five times the inside cross-sectional area of the pipe. These perforated pipe sections should be calibrated for head loss.

8.10 *Well Screen.*–Well screen or slotted pipe may be required for testing in granular, unstable materials that require support [9]. As a general rule, the maximum size of slot width should be approximately equal to the 50-percent size of the particles around the drill hole (see subpar. 11.4).

8.11 *Water Level Measuring Device*:

8.11.1 Although there are other types of water level indicators, the electrical probe indicator is most commonly used. Essentially it consists of (1) a flexible, insulated conduit marked in linear units and enclosing two wires, each insulated except at the tips; (2) a low-voltage electrical source; and (3) a light or other means of indicating a closed circuit which occurs when the tips contact the water surface. Different brands of electric water level indicators and even different models of the same brand often have their own unique operating characteristics. Before using any electric water level indicator, it should first be tested at the surface in a bucket of water.

8.11.2 For approximate measurements of the water level when it is within about 100 feet (30 m) of the ground

surface, a cloth tape with a "popper" can be used. A "popper" can be made from a short pipe nipple (or length of tubing) by screwing a plug attached to a graduated tape into one end of the nipple and leaving the other end of the nipple open. When the "popper" is lowered in the drill hole and the open end of the pipe nipple strikes a water surface, it makes a popping sound, and the depth to water can be measured by the tape.

8.11.3 An accurate measurement of the water level can be made by chalking the lower end of the steel tape. After contacting the water level, the tape should be lowered about 1 more foot before retrieving it. Measurement is then made to the "wet line" on the tape.

8.12 *Temperature Measuring Device.*–Equipment for measuring ground-water temperature is available from commercial sources or can be made from a thermistor, two-conductor cable, reel, Wheatstone bridge, and a low-voltage electrical source. A maximum-minimum type thermometer is acceptable.

9. Regents and Materials

9.1 *Water* (See subpars. 7.2, 7.3, and 7.4.).–The clear water supply should be sufficient to perform the hydraulic conductivity test without interrruption and to maintain the required pressure throughout the test period.

9.2 *Sand or Gravel Backfill.*–Where a granular backfill is used to prevent sloughing of the drill hole wall, it should be a clean coarse sand or fine gravel. Laboratory permeability tests (USBR 5600 or 5605) should be made on the backfill material to make sure that it has a coefficient of permeability greater than one order of magnitude higher than that expected of the in situ material being tested.

10. Precautions

10.1 *Safety Precautions*:

10.1.1 This procedure may involve hazardous materials, operations, and equipment.

10.1.2 Use normal precautions for drilling [10, 11].

10.1.3 Precautions should be taken during calibration pressure testing of equipment, particularly testing of packers with compressed air or nitrogen (never use oxygen) to avoid injuries from a sudden packer or hose rupture.

10.2 *Technical Precautions*:

10.2.1 As a general rule, total pressure (static head plus gauge pressure) applied in the drill hole should not exceed 1 lbf/in² per foot (22.6 kPa/m) of rock and soil overburden at the center of the test interval, if the test interval is 10 feet (3 m) long or less. If the test interval exceeds 10 feet, pressure should not exceed 1 lbf/in² per foot of overburden at the top of the interval. In layered or fractured material, or for drill holes near steep abutments or slopes, 0.5 lbf/in² per foot (11.3 kPa/m) of material to the nearest free surface is an appropriate maximum pressure. Higher pressures than these may fracture the materials.

10.2.2 If there is excessive or complete loss of water when the hole is being drilled, drilling should be stopped before cuttings fill the voids, and a hydraulic conductivity test completed on a shorter than normal length test interval.

10.2.3 Hydraulic conductivity test equipment should be considered and treated as precision testing equipment. Gauges, thermometers, etc., should have their own protective cases; they should not be carried with drill tools or be tossed around. They should be calibrated frequently. It is recommended that all test equipment needed for hydraulic conductivity testing be kept separate from drilling equipment.

11. Calibration

11.1 *For Measurment of Effective Head*:

11.1.1 *Pressure Sensors.*–Calibrate down-hole pressure sensors by the methods and at frequencies prescribed by USBR 1050.

11.1.2 *Friction Loss Estimates.*–Where down-hole pressure sensors are not used, estimates of effective head at the test interval are made by subtracting friction loss from the applied head measured at the ground surface. The friction loss should be determined for all components of the piping system, from the pressure gauge to the test interval.

11.1.2.1 Calibrate friction loss in parts or sections of the piping systems including (1) the swivel (if used); (2) feed pipe (per unit length); and (3) the packer assembly. Record the data, with references to the particular parts calibrated, in tabular or graphical form so the accumulative friction loss can be totaled for determination of effective head at the test interval. The calibration procedure is as follows:

11.1.2.1.1 Lay out the individual or joined parts to be calibrated on a horizontal surface with calibrated pressure gauges at each end.

11.1.2.1.2 Pump water through the system at incremental, increasing flow rates to the maximum flow rate expected to be used in the test; allow the flow to stabilize between incremental flows.

11.1.2.1.3 Record the pressure at each gauge for each incremental flow rate.

11.1.2.1.4 Calculate the friction head loss for each incremental flow rate.

$$f = 2.31 \left(\frac{P_1 - P_2}{d} \right) \qquad (1)$$

where:

f = friction head loss in feet of head per linear foot of pipe, ft/ft or m/m
P_1 = upstream pressure, lbf/in² or kPa
P_2 = downstream pressure, lbf/in² or kPa
d = pipe length, ft or m ($d = 1$ for swivel or packer assembly)
2.31 = converts from pressure in lbf/in² to head in feet or 0.102 converts from pressure in kPa to head in meters

Example, assume

P_1 = 18.6 lbf/in² or 128 kPa
P_2 = 13.2 lbf/in² or 91.0 kPa
d = 10.0 ft or 3.05 m

Inch-pound application:

$$f = 2.31\left(\frac{18.6 - 13.2}{10.0}\right) = 1.25 \text{ ft/ft}$$

SI application:

$$f = 0.102\left(\frac{128 - 91.0}{3.05}\right) = 1.24 \text{ m/m}$$

11.1.2.1.5 Plot friction head loss versus flow rate. Figure 3 is an example of a plot of friction head loss (f) at relatively low flow rates for a 10-foot (3.3-m) length of 1-1/4-inch (32-mm) diameter pipe. Since head loss in pipe at turbulent flow is approximately related to velocity squared, a plot of friction head loss versus the square of the flow rate is nearly a straight line (see fig. 4).

NOTE 3.–There are standard tables and charts which provide unit friction losses for various sizes of pipe, elbows, tees, reducers, etc., for clean and rusty conditions. Although such information is sometimes used, it is preferable to determine friction losses in the piping system and packers actually used for the hydraulic conductivity test.

11.1.2.1.6 To calibrate a packer, inflate the packer in a short length of casing or pipe in which a valve and pressure gauge have been installed. A pressure gauge is also installed in the rods immediately ahead of the packer assembly. Pump water into the rods at incremental increases (or decreases) of flow rate—allowing the system to stabilize after each incremental change—until the highest anticipated flow rate is reached.

NOTE 4.–For packers smaller than N-size, such as the B-size used in wireline equipment, there are significant head losses, and relatively low flow rates must be maintained. This requires water meters and pressure gauges capable of accurately measuring the low flows and small changes in pressures.

11.2 *Pressure Gauges.*–Calibrate each pressure gauge (see USBR 1040) by comparing it with a test or master gauge. The master gauge should not be used during drilling or hydraulic conductivity testing. Calibrate each gauge at the start of a testing program plus one additional calibration per week during tests of long duration.

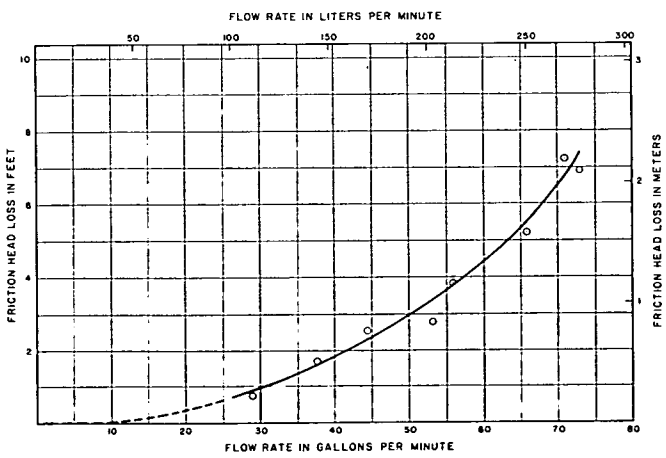

Figure 3. – Head loss due to friction at increasing flow rates for a 10-foot (3-m) 1-1/4-inch (32-mm) diameter iron pipe.

11.3 *Flowmeters.*–Calibrate a flowmeter by flowing water into a container of known volume; the container used for the volume check should be commensurate in size with the flowmeter size and graduations. From these data, flow rates can be calculated for comparison with meter readings. All flowmeters should be calibrated to an accuracy of ±1 percent. Calibration should be done at the start of the testing program plus one additional calibration per week during tests of long duration.

NOTE 5.–Some impeller-type flowmeters have an accuracy range significantly less than indicated by the dial. Minimum and maximum rates should be established.

11.4 *Well Screens and Perforated or Slotted Pipe Sections.*–From manufacturers' data or by calibration, determine the head losses in expected flow ranges to ensure there is no restriction of flow into the material being tested.

12. Conditioning

12.1 Not applicable, special conditioning requirements are not needed for this procedure.

13. Procedure

13.1 *Cleaning of Drill Hole*:

13.1.1 Remove any accumulation of fine particles (smear, mud cake, compaction caused by driving casing, etc.) from the drill hole wall. Such accumulation significantly restricts the flow of water into or from the hole. Exercise good judgment in cleaning the hole, since excess cleaning may be detrimental. If there is a question as to whether or not drill holes in particular materials need cleaning, hydraulic conductivity tests can be performed in holes with cleaning and others without cleaning. If cleaning does not significantly change test results at a site, cleaning of additional intervals in the same materials may not be necessary.

13.1.1.1 When the test interval is above the water table, it may be possible to brush or scratch the drill hole wall to break up accumulated fines. For unstable materials which require use of a well screen, materials which cave against the screen may break up the accumulation of fines on the wall. Mild surging with a bailer, while adding water, also may help break up a disturbed or compacted zone, but this may stir up fines which then plug the voids in the material to be tested. Mild jetting—followed immediately by bailing or pumping—also is a possibility.

13.1.1.2 When the test interval is below the water table—in materials that are rock-like and self-supporting—use of a water jet in the hole (preferably accompanied with pumping to induce flow into the borehole) is one of the best methods to clean the hole. After jetting, bail or pump the sediment-laden water from the test interval. Jetting can also be used through a screen below the water

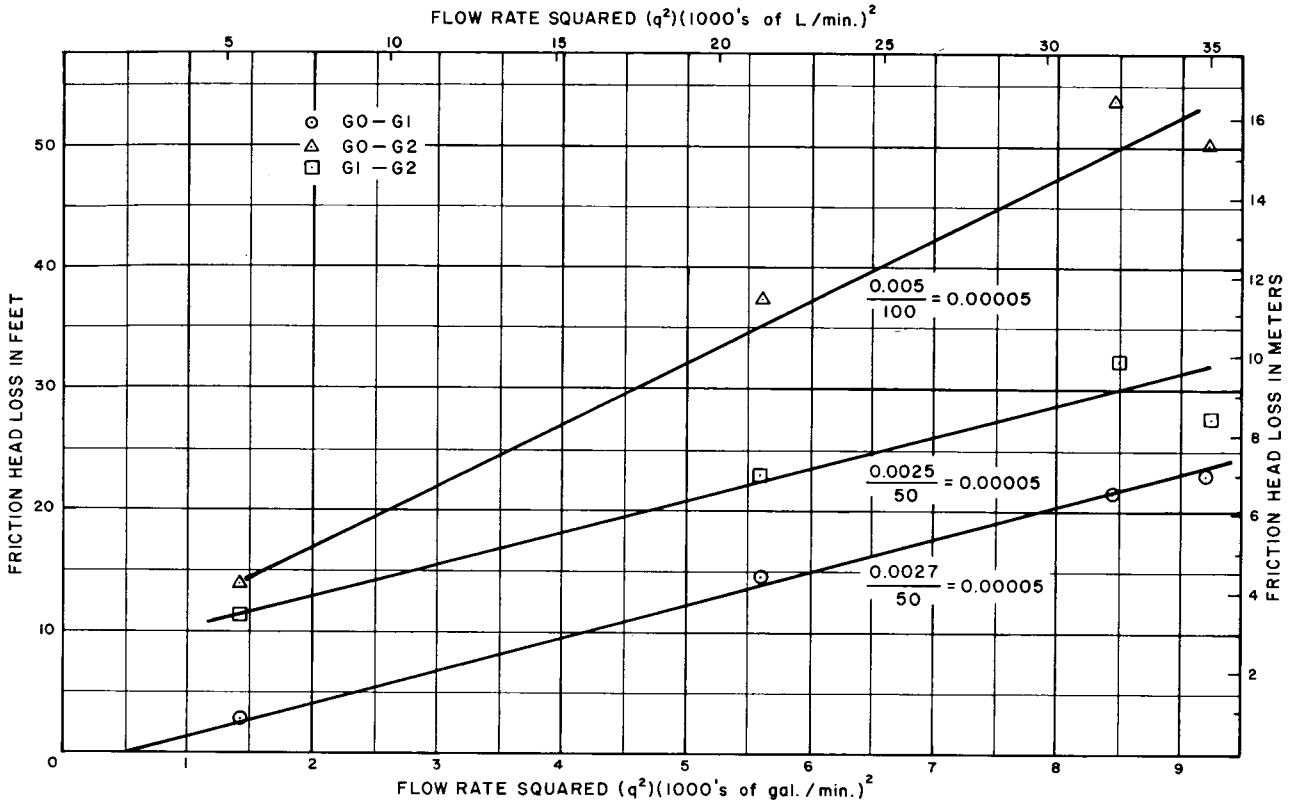

Figure 4. - Plot of feed pipe calibration data — example.

table in unstable materials. For soft rock, flushing the sides of the drill hole by running the bit or a bailer up and down the hole may enlarge the hole by erosion or otherwise change the characteristics of the fracture systems.

13.1.1.3 Finally, clean the drill hole by pumping or bailing water from the bottom upward, with the pumping continued until the return fluid is clear without cuttings or sediment. Record the method used in cleaning the hole on the log of drill hole or on a special testing form.

13.2 *Length of Test Interval*:

13.2.1 The length of the test interval depends on (1) purpose of the test, (2) stratigraphic interval, and (3) flow rate. Where materials are relatively uniform, use a test interval of about 10 feet (3 m). Where flow rates are high, shorten the test interval to locate high flow rate zones; where rates are very low, the interval may be lengthened if desired.

13.3 *Ground-Water Level Determination*:

13.3.1 Depth to ground-water level must be determined before calculating hydraulic conductivity. Measure depths to water levels with an electrical probe or other suitable equipment (see subpar. 8.11).

13.3.2 *Auger Holes.*–In power auger or other types of holes to which water is not added as part of the drilling process, report the presence or absence of a water level, depth to water level, and date of initial and final water level measurement. In materials of low hydraulic conductivity, several days to several weeks may be required for a water level to stabilize in the hole. Report evidence of moisture in the cuttings and if a perched water level was observed.

13.3.3 *Rotary or Cable Tool Holes.*–For drill holes in which addition of water to the hole is an integral part of the drilling process:

13.3.3.1 Bail or pump the hole dry or to a stable water level at the close of the last shift each day and record level.

13.3.3.2 Report the presence or absence of water and depth to water at the beginning of the first shift each day. Additional readings are desirable whenever water level in the hole has not been disturbed for an appreciable period of time.

13.3.3.3 Report changes in water level detected as the hole is drilled deeper. Record factors that affect the water level such as depth of casing, and/or cemented intervals. These data may be helpful in recognizing perched or confined (artesian) conditions.

13.3.3.4 Upon completion of the hole, the water must be bailed down to the extent practicable, the water level measured, and the date recorded of hole completion. Measure the water level for a period of days or weeks until equilibrium is reached.

NOTE 6.–At times, exceptions must be made to the requirement for continuation of water level readings. Such is the case when

state or local laws require that the hole be filled continuously from bottom to top immediately upon hole completion and before the drill crew leaves the site. In other instances, landowners may allow right-of-entry for only a limited time for measurements.

13.3.4 *Perched and Artesian Aquifers.*–It is important to recognize perched and artesian aquifers, especially those under sufficient pressure to raise the water level above the confining layer but not to the ground surface (see [5]). They must be distinguished from water table aquifers (those which continue in depth). If perched water table or artesian aquifers—separated by dry or less permeable strata—are encountered in the same drill hole, the resulting water level in the hole is a composite; therefore, conclusions and interpretations based on such data are misleading. If a perched water table is recognized (or suspected) during drilling, water levels must be determined for each zone for calculation of hydraulic conductivity. This might require completion of the drill hole with a watertight seal set at a suitable horizon to separate two water table conditions. In this type installation, two strings of pipe or conduit are required: one extending down to the portion of the hole immediately above the packer, and a second string extending through the packer to a point near the bottom of the hole. Water-level measurements provide the basis for determining a perched condition or if the lower water table is under artesian pressure.

13.3.5 *Multiple Water-Level Measurements.*–In some instances, it is desirable to install multiple conduits and packers or plugs in a drill hole so that ground-water levels (or pressure heads) in several water-bearing horizons can be measured over an extended period of time (see [5], pp. 7-14).

13.4 *Pressure Tests With Packers*:

13.4.1 The recommended arrangement of typical equipment for packer pressure tests, without a pressure sensor is shown on figure 2. (See app. fig. X1.1 for equipment with a pressure sensor.) Beginning at the source of water, the general arrangement is clean water source, suction line, pump, discharge line to storage and/or settling tank, suction line, water-supply pump, surge chamber, line to bypass valve junction, water meter, gate or plug valve, tee with sub for pressure gauge, short length of pipe on which the pressure gauge is attached, tee and off-line bleeder valve for evaluating back and/or holding pressure, flexible 1-1/4-inch (32-mm) diameter hose, and 1-1/4-inch-diameter feed pipe to packer or packers in drill hole, which isolate the test interval. All connections should be tight and as short and straight as possible with minimum change in diameter of hose and pipe. Friction loss decreases as the pipe diameter is increased.

13.4.2 When the material is subject to caving, and casing and/or grout is needed to support the walls of the drill hole, the hole should be water tested as it is advanced. Other hole conditions may make this procedure desirable or necessary. The following procedure is commonly used:

13.4.2.1 After the hole has been drilled to the top of the interval to be tested, it may be desirable to remove the drill string from the hole and advance casing or grout to the bottom of the hole.

13.4.2.2 Advance the hole 5 to 10 feet (1.5 to 3 m) into the material to be tested.

13.4.2.3 Remove the drill string from the hole.

13.4.2.4 Clean the interval to be tested, and record the depth to the water table, if present. If a composite water level is suspected, the water level affecting the test should be determined by measurements through the feed pipe after the packer has been seated and the water level has stabilized.

13.4.2.5 If the hole will stand open, seat a single packer at the top of the test interval. Record the type of packer, its depth, and packer pressure if it is the inflatable type.

13.4.2.6 Pump water into the interval at a rate to develop a suitable pressure. The pressure to be used depends upon testing depths and ground water levels or pressures. Materials subject to deformation or heaving, such as by separation of bedding planes or joints, or materials at shallow depths, must not be subjected to high pressures (see subpar. 10.2.1). For comparison of flow rates in different parts of a single foundation and with results from other foundations, some of the following pressures are commonly used: 25, 50, 75, and 100 lbf/in² (170, 350, 520, and 690 kPa).

NOTE 7.–At test pressures less than 25 lbf/in², errors in measurement of pressure and volume of water may increase unless special low pressure gauges are used. Gravity tests provide more accurate results under these conditions. At pressures higher than 10 lbf/in², difficulties in securing a tight packer seal and the likelihood of leakage increase rapidly. However, under artesian pressures or in deep holes the water pressure—as registered on a surface gauge—will need to be sufficient to overcome the effective head at the test interval and firmly seal the packer.

NOTE 8.–Where the hole is subject to caving, a pump-down wire-line system has been developed that can be used to eliminate removal of the drill string from the hole. With this system, the hole is drilled to the bottom of the interval to be tested, and the drill rod is raised so the end of the rod is at the top of the test interval. The tandem packer (see subpar. 8.8.2) is then lowered through the drill rod and expanded to seal both inside the rod and against the wall of the hole at the top of the test interval. Models of this equipment are available which have transducers below the packer for measuring water pressures at the test interval.

13.4.2.7 For determining effective head, artesian heads encountered in the drill hole are treated the same as water table conditions; i.e., the depth from the pressure gauge, or the water level maintained during the test, to the stabilized water level is used as the gravity head. If the artesian head stabilizes above the ground surface, the gravity component of the effective head is negative and is measured between the stabilized level and the pressure gauge height. If a flow-type test is used, the effective head is the difference between the stabilized water level and the level maintained during the flow period.

13.4.2.8 After pressures are selected, based on ground-water conditions and the purpose of the test, perform a test at each pressure. Usually, a 5-cycle procedure is used, three increasing steps to the maximum pressure and then two decreasing steps to the starting pressure. This cycling allows a more detailed evaluation of test results than testing at a single pressure and commonly allows extrapolation to ascertain at what pressures the following may occur (1) laminar flow, (2) turbulent flow, (3) dilation of fractures, (4) washouts, (5) void filling, or (6) hydraulic fracturing. However, the equations normally used to calculate hydraulic conductivity are based on laminar flow conditions.

NOTE 9.–In some instances, only a single water pressure test at a given interval in the drill hole may be required. For example, if geologic conditions are known, and there is no need to perform the steps in subparagraphs 13.4.2.2 through 13.4.2.6, a single value of hydraulic conductivity with a relatively low application of pressure may suffice.

13.4.2.9 During each test, continue pumping water to the test interval at the required pressure until the flow rate becomes stable. As a general guide, maintain flow rates during three or more 5-minute intervals during which 1-minute readings of flow are made and recorded. In tests above the water table, water should be applied to the test interval until the flow rate stabilizes before starting the 5-minute measurement intervals. Where tests are below the water table, flow rates usually stabilize faster than for the tests above the water table, and the time period before the 5-minute test intervals may be shorter. These time periods may need to be varied, particularly when tests to determine grouting requirements are made

13.4.2.10 Determine and record the presence of back pressure and decay of holding pressure. After the test, deflate the packer and remove it from the drill hole.

13.4.2.11 Advance the drill hole and, if necessary, the casing; repeat the procedure in subparagraphs 13.4.2.3 through 13.4.2.10 until the required depth of drill hole is reached. When casing is used in a drill hole, always set the packer in the material below the casing.

13.4.3 If the hole will stay open without casing, it can be drilled to final depth, and after cleaning the hole, hydraulic conductivity tests can be performed from the bottom of the hole upward using straddle (double) packers. Although a single packer can be used to test the bottom interval of the hole, starting at the bottom with double packers will cause loss of borehole testing of only about the length of the bottom packer and will save one complete trip in and out of the hole with the drill string assembly to change the packers. After the test for the bottom interval is completed, straddle packers are used for successive test intervals up the drill hole. See subparagraph 13.4.2, where caving or other hole conditions will not allow this procedure.

13.5 *Gravity Tests*:

13.5.1 Constant-head gravity tests are usually performed without packers above or below the water table with drill holes of N-size or larger (see fig. 2, detail D). This type of test is often made in reasonably stable-walled drill holes up to 25 feet (7.6 m) depth where water pressure at the test interval needs to be kept low. The test is usually performed in successive 5- or 10-foot (1.5- or 3-m) intervals as the drill hole is advanced. The upper end of each test interval is normally determined by the bottom depth of tightly reamed or driven casing. If the casing is not believed to be tight, appropriate entries should be recorded on the log form. If the wall of the drill hole is stable, the test can be performed in the unsupported hole. If the wall needs to be supported, use a well screen (see subpar. 11.4 for calibration) inserted through the casing. It may be necessary to ream or drive the casing to the bottom of the interval, set the screen, and then pull back the casing to expose the screen. After the test, the screen is removed and the casing reamed or driven to the bottom of the hole.

NOTE 10.–Clean coarse sand or fine gravel backfill (see subpar. 9.2) may be used instead of a well screen. Ream or drive the casing to the bottom of the interval, clean it out, and add the backfill as the casing is pulled back to expose the test interval. Record use of this procedure on the log form.

13.5.1.1 If the drill hole is self-supporting, clean and prepare it in the normal manner (see subpar. 13.1).

13.5.1.2 If the drill hole is not self-supporting, lower the well screen and casing into the hole.

13.5.1.3 For test intervals above the water table, maintain a constant head of water [within 0.2 foot (60 mm)] at the top of the test interval by injecting water through a small diameter tube extending below the water level maintained during the test. For test intervals below the water table or influenced by artesian conditions, maintain a constant head a short distance above the measured static water level.

Monitor the water level with a water-level indicator. If the water-level indicator is inserted in a small diameter pipe in the casing, the wave or ripple action on the water surface will be dampened and permit more accurate water-level measurements.

NOTE 11.–When the flow rate is very low, the constant water level can be maintained by pouring water in the hole from a graduated container.

13.5.1.4 Record the flow rate at time intervals until a constant flow rate is reached.

13.5.1.5 Repeat the procedure of subparagraphs 13.5.1.3 and 13.5.1.4 at one or more different water levels.

13.5.1.6 This test is essentially the same as designation USBR 7300 (see also [3], p. 74); the instructions in USBR 7300 for performing the test and calculating hydraulic conductivity apply to this procedure also.

14. Calculations

14.1 For pressure or constant gravity head hydraulic conductivity tests, calculate the hydraulic conductivity of

the soil or rock by the following equation (expressed in consistent units) [4]:

$$k = \frac{q}{2\pi LH} \ln \frac{L}{r}, \text{ where } L \geqq 10r \qquad (2)$$

or

$$k = \frac{q}{2\pi LH} \sinh^{-1} \frac{L}{2r}, \text{ where } 10r \geqq L \geqq r \qquad (3)$$

where:

k = hydraulic conductivity, ft/yr or cm/s
q = constant rate of flow into the test interval, ft^3/yr or cm^3/s
L = length of the test interval, ft or cm
H = differential head of water at test interval, ft or cm
r = radius of the borehole, ft or cm
ln = natural logarithm, $\log_e$
$\sinh^{-1}$ = inverse hyperbolic sine, $\sinh^{-1} x \ln (x + \sqrt{x^2 + 1})$

14.2 An example calculation for a single packer test in the bottom of a borehole below the water table follows:

Example, assume:

r = 1.8 in or 0.15 ft = 4.6 cm
q = 2.2 gal/min or 8.3 L/min
q = 1.5×10^5 ft^3/yr = 140 cm^3/s
L = 3.0 ft = 91 cm
H_g, gravity = distance from ground-water level to pressure gauge = 10.2 ft = 311 cm
H_p, pressure = 5 $lbf/in^2 \times 2.31$ $ft_{water}/$ (lbf/in^2)
= 11.6 ft = 354 cm of water
$H = H_g + H_p$ = 21.8 ft = 664 cm
$\frac{L}{r} = \frac{3.0}{0.15} = 20$, hence use equation (2):

$$k = \frac{q}{2\pi LH} \ln \frac{L}{r}$$

$$k = \frac{1.5 \times 10^5 \text{ ft}^3/\text{yr}}{2\pi\,(3.0 \text{ ft})\,21.8 \text{ ft}} \ln \frac{3.0 \text{ ft}}{0.15 \text{ ft}}$$

$$k = 1.1 \times 10^3 \text{ ft/yr} = 1.1 \times 10^{-3} \text{ cm/s}$$

NOTE 12.–These equations are most applicable and reliable where the length of test interval is at least $5r$, and the interval is below the water table. The equations are based on laminar flow of fluid through porous media. Flow rates, high enough to cause turbulent flow, invalidate the results in all types of material. In fractured material, the calculated value should be considered an apparent hydraulic conductivity even under laminar flow conditions.

14.3 For pressure tests, when the test interval is below the water table, H is the distance from the water table to the elevation of the pressure gauge plus applied pressure converted to linear units of water head.

Where the test interval is above the water table, H is the distance from the midpoint of the isolated test interval to the elevation of the pressure gauge plus the applied pressure converted to linear units of water head.

For gravity tests above the water table, H is the distance between the bottom of the test interval and the water level maintained during the test.

For gravity tests below the water table, H is the distance between the pretest stabilized water level in the drill hole and the water level maintained during the test.

14.4 If there is artesian pressure, an additional pressure must be applied to overcome the artesian pressure to provide an effective test pressure. For example, if there is an artesian pressure of 5 lbf/in^2 (34 kPa) at the pressure gauge, 15 lbf/in^2 (103 kPa) could be applied, then the effective pressure would be 15 lbf/in^2 minus 5 lbf/in^2 which equals 10 lbf/in^2 (69 kPa).

14.5 The calculations can be done conveniently by (1) a nomograph [12], (2) a hand calculator with the proper functions, or (3) a computer. For repeated tests, it is convenient to prepare a table for one or more diameter drill holes and lengths of test intervals and combine the terms on the right side of the equations, other than q and H, into a coefficient.

NOTE 13.–The lugeon (lugeon unit, lugeon coefficient) [13, 14, 15, 16], has been used as an index of hydraulic conductivity, in connection with cyclic tests, and for grouting purposes.

15. Report

15.1 Record field test data on a daily driller's report, and/or on the log of the drill hole or on a special reporting form designed for the specific project. Record the following:

15.1.1 Log of the drill hole.

15.1.2 Elevations of the ground surface, the water table, and the top and bottom of the test interval.

15.1.3 Diameter of the drill hole at test interval.

15.1.4 Method of cleaning the drill hole.

15.1.5 Size of the feed pipe and any well screen.

15.1.6 Water pressure and/or gravity head, and flow rate for each time interval.

15.1.7 Total amount of water used per test.

15.1.8 Average temperature of ground water and water used in the test.

15.1.9 Packer inflation pressures.

15.1.10 Capacity of pump supplying water to the test interval.

15.1.11 All head loss calibration data.

15.1.12 Note any comments considered necessary to help evaluate the test results.

15. References

[1] "Permeability Tests Using Drill Holes and Wells," Bureau of Reclamation Geology Report No. G-97, Denver, Colorado, January 3, 1951.

[2] *Ground Water Manual*, 1st ed., rev. reprint, Bureau of Reclamation, U.S. Government Printing Office, Washington, D.C., 1981.

[3] *Drainage Manual*, 1st ed., 2d print., Bureau of Reclamation, U.S. Government Printing Office, Washington, D.C., 1981 1984.

[4] Zangar, Carl N., *Theory and Problems of Water Percolation*, Engineering Monograph No. 8, Bureau of Reclamation, Denver, Colorado, 1953.

[5] *Drill Hole Water Tests*, Technical Instructions–Provisional, Engineering Geology, Bureau of Reclamation, July 1970 (unpublished).

[6] *Glossary of Geology*, 2d ed., American Geological Institute, Falls Church, Virginia, 1980.

[7] Hatcher, R. C., "High Pressure Inflatable Packer with Pneumatic Piezometer," Bureau of Reclamation Report GR-10-75, Denver, Colorado, October 1975.

[8] Bennett, R. D. and R. F. Anderson, "New Pressure Test for Determining Coefficient of Permeability of Rock Masses," Technical Report GL-82-3, U.S. Army Engineer Waterways Experiment Station, Vicksburg, Mississippi, 1982.

[9] *Ground Water and Wells*, A Reference Book for the Water-well Industry, 1st ed., published by Edward E. Johnson, Inc., Saint Paul, Minnesota, 1966.

[10] *Driller's Safety Manual*, 1st ed., reprint, Bureau of Reclamation, Denver, Colorado, 1982.

[11] Acker, W. L., III, *Basic Procedures for Soil Sampling and Core Drilling*, published by the Acker Drilling Company, Scranton, Pennsylvania, 1974.

[12] *Underground Mining Methods Handbook* No. 580, W-88, Society of Mining Engineers, Littleton, Colorado, p. 62, 1982.

[13] Lugeon, M., "Barrages et Geologie Dunod, Paris," 1933.

[14] Houlsby, A. C., "Routine Interpretation of the Lugeon Water-Test," Quarterly Journal, Engineering Geology, vol. 9, pp. 303-313, 1976.

[15] Heitfeld, K. H., and L. Krapp, "The Problem of Water Permeability in Dam Geology," Bull. International Association of Engineering Geology, No. 23, pp. 79-83, 1981.

[16] Pearson, R. and M. S. Money, "Improvements in the Lugeon or Packer Permeability Test," Quarterly Journal, Engineering Geology, vol. 10, the Netherlands, pp. 221-239, 1977.

APPENDIX

X1. PROCEDURE USING A PNEUMATIC PIEZOMETER WITH TWO PACKERS ISOLATING THE TEST INTERVAL

X1.1 Equipment Assembly (Refer to figs. X1.1 and X1.2).–A complete straddle packer unit is assembled as follows.

X1.1.1 Connect a predetermined length of perforated injection (feed) pipe to the lower packer. (The length of perforated pipe is determined by the thickness of the zone to be tested.) Connect the inflation tubing to the lower packer, and lower the sliding head end of the packer into the drill hole. (See subpar. 11.1.2.1.6 for calibration of packers.)

X1.1.2 Clamp the top of the perforated injection pipe at the hole collar, and connect the upper packer with the sliding head already down the hole.

X1.1.3 Provide approximately 12 inches (300 mm) of slack in the inflation tubing between the two packers to allow for retraction of the upper packer sliding head. Connect the tubing to the upper packer.

X1.1.4 Install the pneumatic piezometer, piezometer tubing, packer inflation tubing, and sealed lengths of injection pipe to the head adaptor.

X1.1.5 Lower the entire unit into the drill hole adding lengths of sealed injection pipe as necessary to reach the interval to be tested. As the unit is lowered, the packer inflation tubing and the piezometer tubing is unreeled into the hole and taped to the sealed injection pipe at approximately 10-foot intervals.

X1.1.6 Upon reaching the test depth, lock both the inflation tubing reel and the piezometer tubing reel; connect the inflation tubing by quick-connect couplings to a nitrogen or compressed air bottle equipped with a high pressure regulator; connect the piezometer tubing by quick-connect couplings to the readout box; and connect the injection pipe to the water pressure source. The test is now ready to begin.

X1.2 Test Procedure

X1.2.1 After the unit has been lowered to the test interval and before inflating the packers, any water head above the test interval must be determined. This head will show as pressure on the pneumatic piezometer gauge and can be verified by running a water level indicator into the hole to measure the depth to the water table. The piezometer will register water pressure that can be converted to head of water. This water head should be

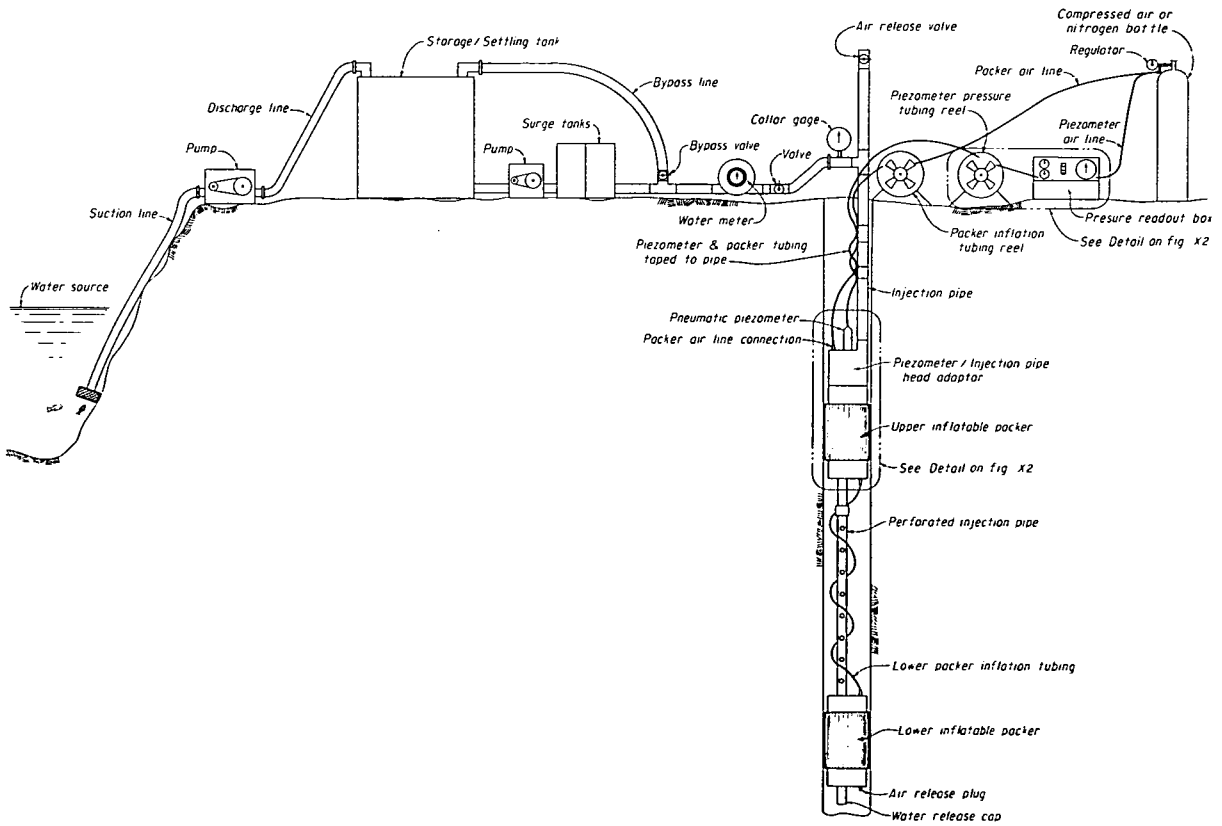

Figure X1.1. - Schematic arrangement of drill hole packer and pressure monitoring equipment. 801-D-180

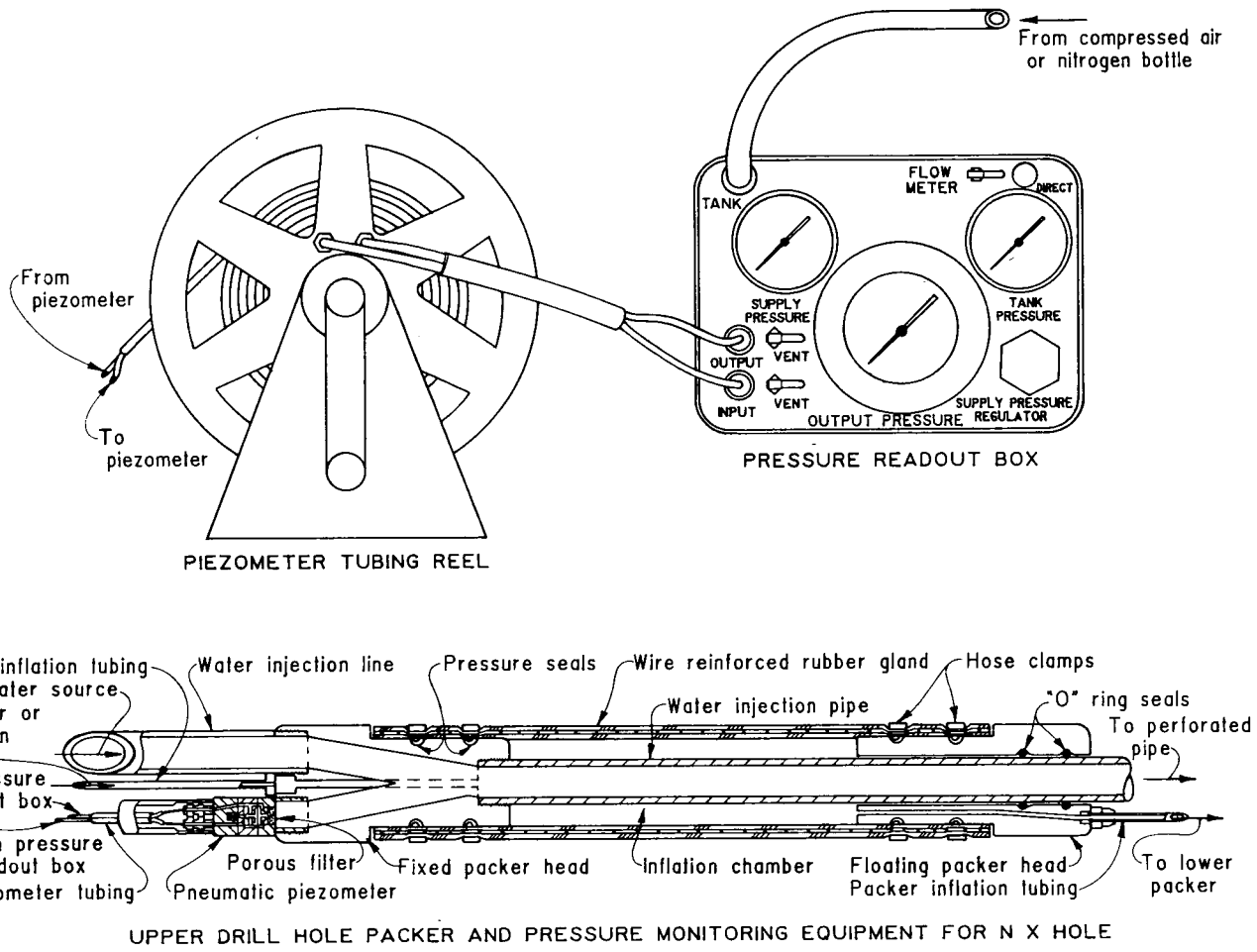

Figure X1.2. – Upper drill hole packer and pressure monitoring equipment for NX hole.

used to determine the minimum inflation pressure to be applied to the packers by the following equation:

$$SH + PP + PE = \text{minimum inflation pressure}$$

where:

SH = static pressure at the midpoint elevation of the test interval, lbf/in² or kPa

PP = gauge pressure to be maintained during the test, lbf/in² or kPa

PE = pressure needed to expand packer to hole diameter as determined before insertion in the drill hole by expanding the packer in a length of pipe having a diameter similar to the hole diameter, lbf/in² or kPa

Inflation pressure gauge is in units of lbf/in² (kPa).

The static water level measured before the packers are inflated might be a composite water level (see subpar. 13.3.4).

X1.2.2 Inflate the packers, and determine water head for the test interval. This is the static head to be used for calculation of hydraulic conductivity. If the static head is significantly different from the composite measured before the packers were inflated, recalculation of packer inflation pressure may be required. The final packer inflation pressure should be the lowest practical pressure to seal the test interval against the maximum injection pressure to avoid fracturing of the material being tested.

X1.2.3 After the inflation pressures have been determined, deflate the packers; fill and flush the system with water until all entrapped air has been removed. This is accomplished by filling the injection pipe under a gravity head and leaving the air-release valve open at the top of the injection pipe tee at an elevation higher than the injection hose. The valve must remain open until all air has been removed and water runs freely, indicating a filled system. At this point, water is flowing around the deflated packer system and is completely filling the annulus between the drillhole and the packers. In the case of an interval with a high injection rate, it may be necessary to keep the air valve closed to keep from entraining air into the test interval.

X1.2.4 Close the air release valve at the top of the injection pipe and slowly inflate the packers to the predetermined inflation pressure.

X1.2.5 Lock in the inflation pressure by closing the pressure valve in the packer tubing. If the pressure gauge

on the closed system remains steady, it verifies a sealed system. At this point, water injected under gravity head approaches a constant flow rate.

X1.2.6 Record the piezometer pressure after packer inflation. For an interval of very low injection rate, this is equal to the height of the injection standpipe plus the pressure recorded at the hole collar gauge. For a test interval with a high injection rate, the readout would show the same value less any friction from water flow through the injection pipe.

X1.2.7 Proceed with the test by applying the selected pressures at the test interval and monitoring the flow rate and pressure on the pneumatic piezometer.

X1.2.8 To accurately compute hydraulic conductivity, the down-hole pressure must remain constant. A zone with a high injection rate must be monitored more closely than a zone with a small injection rate, and adjustments made to hold the down-hole pressure constant. To accomplish this, the injection pressure shown on the collar gauge must be adjusted in order to maintain the down-hole pressure constant.

NOTE X1.–For example, a pressure stage is started with the collar gauge reading 35 lbf/in² (241 kPa) and the down-hole piezometer reading 200 lbf/in² (1380 kPa). As the flow increases, the down-hole pressure may drop to 150 lbf/in² (1034 kPa) because friction loss in the injection pipe and the collar gauge would have to be adjusted to bring the down-hole pressure gauge back up to 200 lbf/in². When the flow decreases from a fast to a slow rate, the collar gauge pressure would have to be decreased.

X1.2.9 The test is completed following one or more stages of pressure increases and pressure decreases. Following the last stage, deflate the packers and close the injection line. The system is now ready to move to the next test interval for repetition of this procedure.

UNITED STATES DEPARTMENT OF THE INTERIOR
BUREAU OF RECLAMATION

USBR 7400-89

PROCEDURE FOR

TESTING FOUNDATION MEMBERS UNDER STATIC AXIAL TENSILE LOAD

INTRODUCTION

This procedure is under the jurisdiction of the Geotechnical Services Branch, code D-3760, Research and Laboratory Services Division, Denver Office, Denver, Colorado. The procedure is issued under the fixed designation USBR 7400. The number immediately following the designation indicates the year of acceptance or the year of last revision. Major portions of this procedure are identical or similar to provisions contained in ASTM D 3689.

1. Scope

1.1 This designation outlines the procedure for testing foundation members to determine their response to static axial tensile loads. Such foundation members may include—but are not limited to—single piles (vertical or batter), pile groups, caissons, anchor bars, buried plates, screw augers, etc. For the purpose of brevity, the term "foundation" will be used in this procedure to describe any foundation member.

NOTE 1.–This procedure only describes methods of testing. It does not cover interpretation or analysis of test results, or the application, thereof, to foundation design.

NOTE 2.–Recommendations in this procedure are directed towards foundations that are designed to resist uplift loading. If other loading conditions such as compressive, lateral, torsional, etc., are anticipated, other appropriate procedures should be considered.

1.2 Although many of the methods and apparatus described in this procedure are applicable to the testing of rock bolts, this procedure is not applicable for such tests.

2. Auxiliary Tests

2.1 For proper evaluation of test results, information concerning subsurface conditions at the test site is required.

2.1.1 At least one boring at the site should be advanced to a minimum depth of 10 feet (3 m) or 5 tip diameters, whichever is greater, below the bottom elevation of the foundation to determine in situ soil conditions. The boring should be located within 20 feet (6 m) but no closer than 10 feet (3 m) of the perimeter of the foundation. Appropriate laboratory tests should be performed on samples obtained from the boring.

2.1.2 If a definitive soil profile has been developed from previous investigations, one of the following tests may be substituted for the test boring:

a. Penetration resistance tests (USBR 7015) conducted at intervals of depth not greater than 5 feet (1.5 m) or when a significant change of material occurs.

b. Cone penetration tests (USBR 7020 or 7021).

Such tests should be located within 20 feet (6 m), but no closer than 10 feet (3 m) of the perimeter of the test foundation for penetration resistance tests and 5 feet (1.5 m) for cone penetration tests, respectively.

NOTE 3.–If the diameter or size of the foundation being tested increases with depth, such as in the case of belled caissons, pressed plates, etc., the distances given in subparagraphs 2.1.1 and 2.1.2 are minimum distances between the test hole and any part of the embedded portion of the foundation.

3. Applicable Documents

3.1 *USBR Procedures*:

USBR 1000 Standards for Linear Measurement Devices
USBR 1007 Calibrating Dial Indicators
USBR 1008 Calibrating Linear Variable Differential Transformers
USBR 1040 Calibrating Pressure Gauges
USBR 1045 Calibrating Force Transducers (Load Cells)
USBR 1050 Calibrating Pressure Transducers
USBR 3900 Standard Definitions of Terms and Symbols Relating to Soil Mechanics
USBR 7015 Performing Penetration Resistance Testing and Sampling of Soil
USBR 7020 Performing Cone Penetration Testing of Soils — Mechanical Method
USBR 7021 Performing Cone Penetration Testing of Soils — Electrical Method

3.2 *USBR Document*:

Construction Safety Standards

3.3 *ASTM Standard*:

ASTM D 3689 Standard Method for Testing Individual Piles Under Static Axial Tensile Load

4. Summary of Method

4.1 Static axial tensile loads are applied to a foundation, by a hydraulic ram/reaction system. During loading and unloading, the movement of the foundation is monitored. The maximum load applied may be a specified percentage of the foundation design load or the foundation may be loaded to failure.

5. Significance and Use

5.1 This designation outlines routine testing methods to determine the tensile load capacity of embedded foundations. Because of variation in foundation configurations, methods of installation, soil type and conditions, and anticipated loading patterns, the introduction of more detailed requirements and procedures, when required, is permitted to satisfy the objectives of the foundation test program.

5.2 While the methods outlined in this procedure produce a relationship between applied tensile load and corresponding foundation movement, the test is of short duration and results may not represent long-term foundation performance.

5.3 The load capacity of a foundation-soil system can be determined best by prototype testing. Prototype testing measures the response of foundation-soil system to loading and may provide data for research and development, design, quality assurance, and acceptance or rejection of the system in accordance with specifications and contract documents.

5.4 Prototype testing, when combined with an acceptance criterion, is suitable for assurance of the foundation design and installation under building codes, standards, and other regulatory statutes.

6. Terminology

6.1 Definitions are in accordance with USBR 3900.

6.2 Terms not included in USBR 3900 specific to this designation are:

6.2.1 *Batter.*–The inclination of a pile from the vertical (inclined in the direction of the force) to resist horizontal forces.

6.2.2 *Cross Connection.*–Braces added to increase the rigidity of the reference beam measuring system.

6.2.3 *Failure.*–The rapid, progressive movement of the foundation member in the direction of load application under a constant or decreasing load.

6.2.4 *Foundation.*–Any embedded foundation, or foundation member, such as single piles (vertical or batter), pile groups, caissons, anchor bars, buried plates, screw augers, etc.

7. Apparatus

7.1 A variety of factors influence selection of the apparatus for applying and measuring load and monitoring movement; among these are: type, purpose, and placement conditions of the foundation; expected loadings; and site conditions (soil type, stratigraphy, topography, climate, etc.). Since these factors and their interrelationships can vary from site to site, one test apparatus configuration will not be applicable for all loading tests. Therefore, various combinations of the following described apparatuses — as well as specially fabricated equipment — often will be necessary.

7.2 *Load Apparatus*:

7.2.1 The apparatus for applying tensile loads is to be constructed and installed so as to apply the load axially to the foundation with minimal eccentricity. Design of all components of the apparatus should provide for an adequate factor of safety under anticipated loading with minimal deflection of the apparatus.

NOTE 4.–When a nonsymmetrical foundation is loaded, rotations and horizontal displacements may occur. The occurrence of such movements and the necessary means to measure the movements, or the reactions required to resist them, should be considered when designing, constructing and installing the load apparatus.

7.2.2 Reaction frames may consist of crossbeam(s) shown on figures 1 and 2, or an A-frame on figure 3.

NOTE 5.–The A-frame may be somewhat more cumbersome to handle than the crossbeam(s); however, it has the advantage of being easily adapted for inclined loadings and for foundation types that have considerable above-ground extension.

7.2.3 If reaction piles are used, they should be of sufficient number and properly installed so as to provide adequate reactive capacity. When two or more reaction piles are used at each end of the crossbeam(s), suitable steel beam(s) set on steel bearing plates or welded to the reaction piles should be used to provide crossbeam bearing. In testing a batter foundation, the reaction piles should be driven parallel to the axis of the foundation.

NOTE 6.–If it is not feasible to apply axial loads to test a batter foundation, results of a test on a similar nearby vertical foundation generally may be used to evaluate its tensile load resistance capacity.

7.2.4 If cribbing, or other types of footings are used, the plan dimensions should be sufficient to transfer the reaction loads to the soil without settling at a rate that would prevent maintaining the applied loads or without significantly reducing the required stroke of the hydraulic rams.

7.2.5 In the case of pile foundations, the clear distance between the test pile and the reaction piles or cribbing should be at least five times the butt diameter or diagonal dimension of the test pile, but not less than 8 feet (2.4 m).

NOTE 7.–The reaction system (elements) should be far enough away from the foundation so there is insignificant effect on the

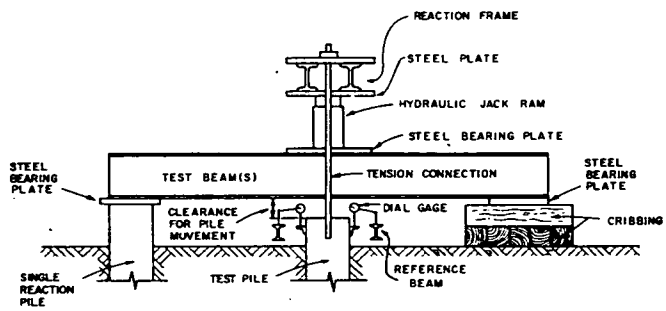

Figure 1. – Test setup using crossbeams [ASTM D 3689].

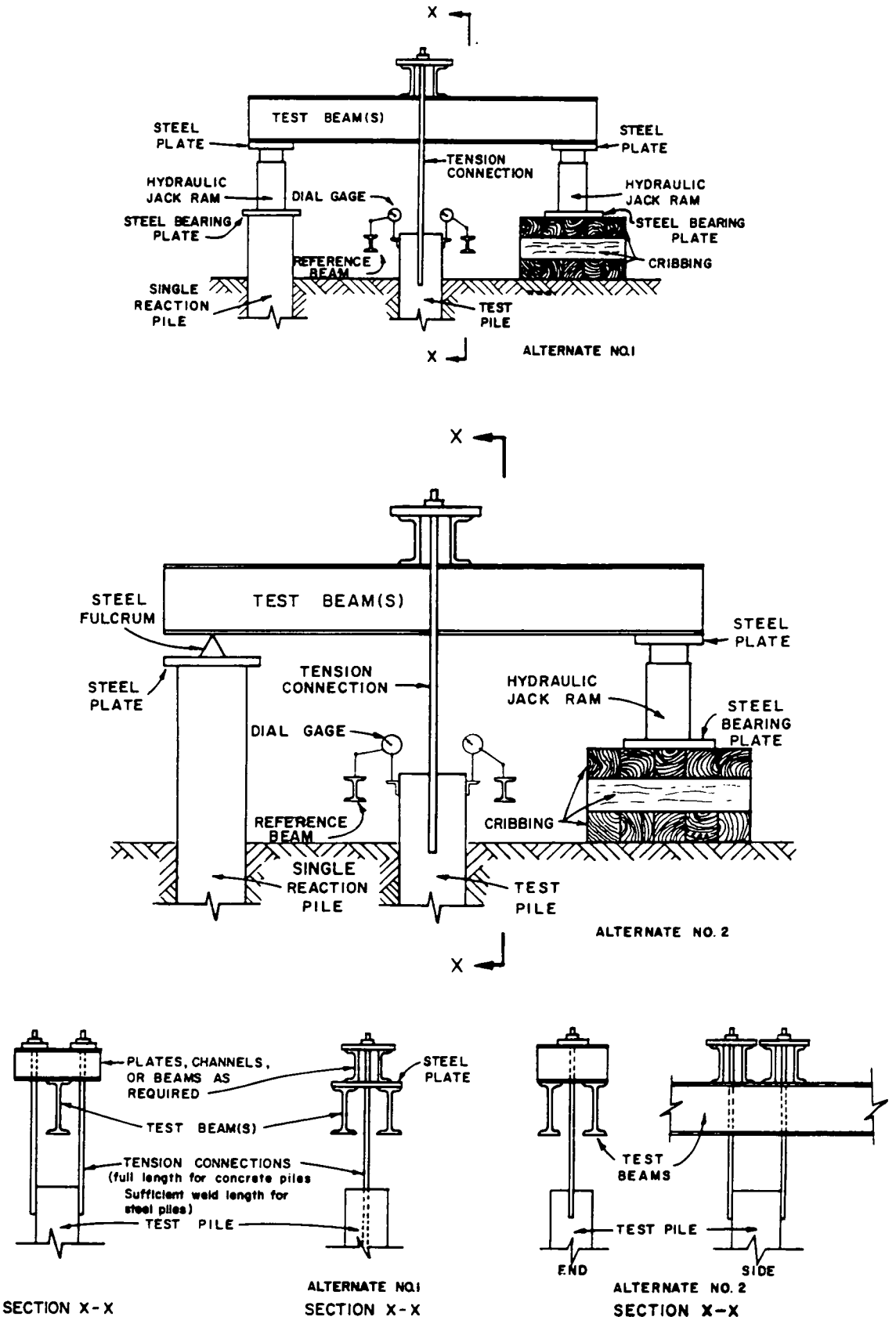

Figure 2. – Alternate methods of using crossbeams to provide reaction force [ASTM D 3689].

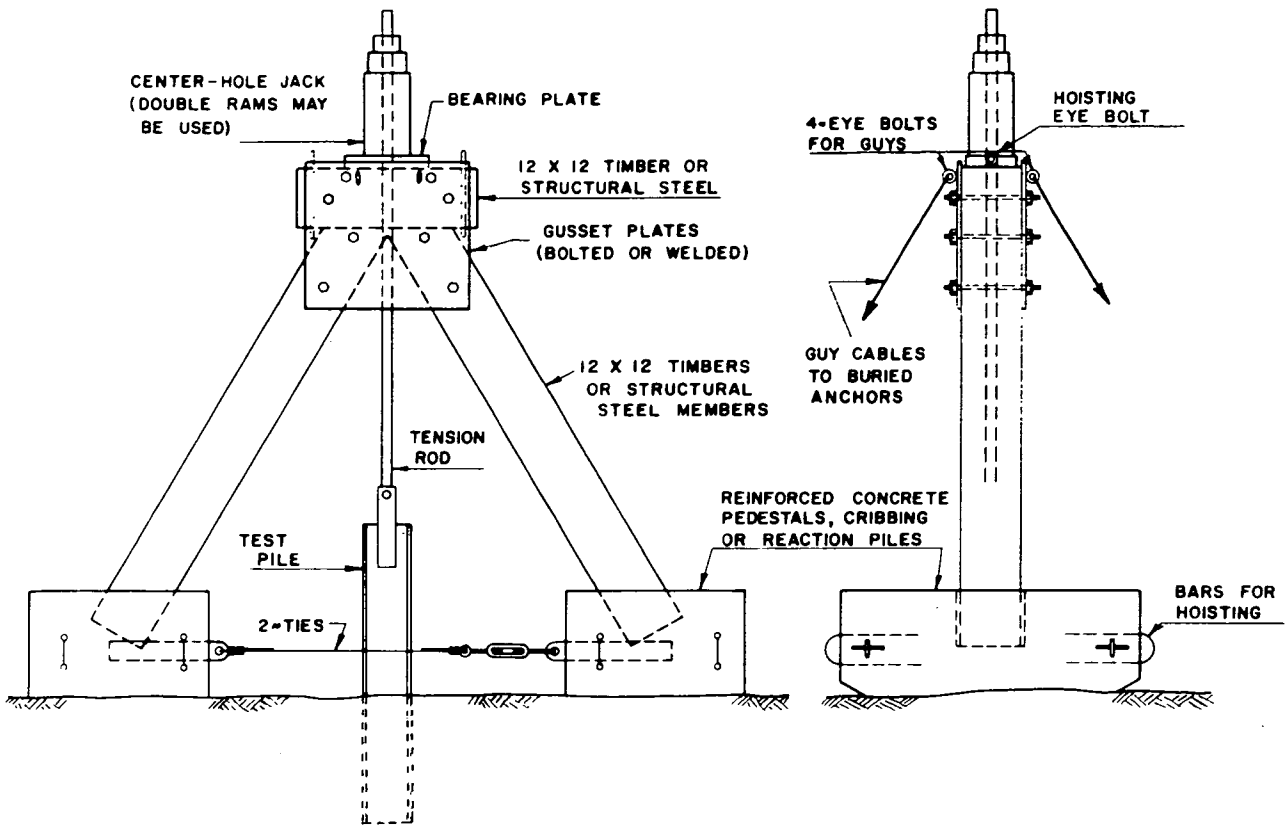

Figure 3. – Loading apparatus incorporating an A-frame. The A-frame may be guyed at various angles for testing batter piles or for special directional pull tests. Guy wires are used to stabilize the A-frame [ASTM D 3689].

performance of the foundation due to external loading. Factors such as type and depth of reaction system, soil conditions, magnitude of loads, and type of foundation should be considered. When testing large diameter foundations (drilled shafts or caissons) the practicality of a spacing of five times the butt diameter or diagonal dimension should be considered and the requirement modified as warranted.

7.2.6 Use steel bearing plates, of appropriate thickness for the loads involved, above and below the hydraulic ram and load cell if full bearing is not provided on steel reaction piles, and between the cap beam and the tops of concrete or timber reaction piles. The size of the bearing plates should not be less than the area covered by the base of the hydraulic ram or load cell, nor less than the total width of the test beam, cap beam, reaction pile, or any steel reaction member so as to provide full bearing and distribution of the load. Bearing plates supporting the hydraulic ram on timber cribbing should have an area not less than five times the base area of the ram.

Bearing plates that support the crossbeam on timber cribbing should have a side dimension not less than 1 foot (0.3 m) greater than the total flange width of the crossbeam or overall width of double crossbeams.

7.2.7 Bearing plates, hydraulic ram, and load cell should be centered on the crossbeam, cap beam, reaction members, reaction piles, or cribbing. Bearing plates should be set perpendicular to the longitudinal axis of the foundation using high-strength, quick-setting grout for concrete reaction piles, or welded to steel reaction piles. In the case of timber reaction piles, set the bearing plates on the pile tops which have been sawed off on a plane perpendicular to the longitudinal axis of the pile. Bearing plates on cribbing should be set in a horizontal plane.

7.2.8 The hydraulic ram should be of adequate capacity to apply the required loads and have sufficient piston stroke to provide for anticipated foundation movements, deflections of the reaction system, and elongations of connecting to the foundation. The use of a single, high capacity ram is preferred to the use of multiple rams; however, if two or more rams are used they should have the same piston diameter and stroke, be connected to a common manifold and pressure gauge, and be operated by a single hydraulic pump.

7.2.9 Loads may be monitored using a pressure gauge connected to the hydraulic loading system or by an electric load cell. Consideration should be given to using a dual load measuring system (pressure gauge and load cell) to provide a check and serve as a backup in the event one system malfunctions.

7.3 *Movement Measurement*:

7.3.1 *General.*–Reference beam supports are to be embedded firmly in the ground as far as practicable from the foundation and reaction piles, cribbing, or supports to prevent movement of the reference beam relative to the foundation. A clear distance of not less than 8 feet

(2.4 m) is recommended. Provisions should be made to protect the instrumentation system from adverse weather and temperature variations and other disturbances.

Reference beams supporting the instrumentation should be of sufficient stiffness so as to minimize variations in readings. If metal reference beams are used, one end is to be allowed to move freely horizontally to compensate for length changes resulting from thermal variations. Reference beams should be cross-connected if necessary for rigidity.

NOTE 8.–Use of reference beams of sufficient stiffness is recommended to avoid the necessity of cross connections. If the beams must be cross-connected, extra precautions are to be taken to avoid accidental disturbance of the reference beam system since both beams would be affected.

7.3.2 *Axial Foundation Movement.*–The apparatus for measuring axial movement of the foundation is to consist of both a primary and a secondary or backup system in accordance with the following methods. Two separate, but not necessarily different types of measuring systems are recommended in order to provide a check on the observed data, to accommodate accidental disturbance of the measuring system, and to permit continuity of data in the event it becomes necessary to reset the gauges or scales.

7.3.2.1 *Dial Indicators.*–Two reference beams, one on each side of the foundation and oriented perpendicular to the direction of the loading/reaction apparatus are required. At least two dial indicators should be mounted to the beams approximately equidistant from the center and on opposite sides of the foundation. Stems of the indicators are to be parallel to the longitudinal axis of the foundation and bearing on lugs firmly attached to the sides or top of the foundation. An alternative method is to mount the two dial indicators on opposite sides of the foundation with stems parallel to the longitudinal axis of the foundation and bearing on lugs firmly attached to the reference beams. Use dial indicators with at least 3-inch (75-mm) travel, or provide sufficient gauge blocks to allow this travel with shorter gauge stems. The indicators should read to 0.001 inch (0.025 mm). Smooth bearing surfaces, perpendicular to the direction of stem travel, should be provided at the contact point of the indicator stems.

7.3.2.2 *LVDTs* (linear voltage differential transformers).–Two LVDTs, mounted to the reference beams in a manner similar to installation of the dial indicators in subparagraph 7.3.2.1; may be used also to measure axial movements of the foundation.

7.3.2.3 *Wire, Mirror, and Scale.*–Orient two wires, one on each side of the foundation, perpendicular to the crossbeams and approximately perpendicular to the longitudinal axis of the foundation. The wires should be supported in a manner similar to that described for the reference beams in 7.3.1. Each wire is to pass not more than 1 inch (25 mm) away from the face of a scale attached to a mirror that is fixed to the foundation and parallel to the axis of the foundation. Readings of axial foundation movement are made directly from the scale by lining up the wire and its image in the mirror. Tension on the wires is maintained throughout the test so that when plucked or tapped they will return to their original position.

8. Precautions

8.1 All operations performed in connection with prototype foundation testing should be carried out in such a manner so as to minimize, avoid, or eliminate human exposure to hazards. Appropriate sections of the USBR *Construction Safety Standards* should be strictly followed. Examples of specific safety rules that should be followed in addition to others contained in the above cited publication are:

8.1.1 All work areas, walkways, platforms, etc., are to be kept clear of scrap, debris, small tools, accumulation of snow and ice, mud, grease, oil, or other slippery substances.

8.1.2 All timbers, blocking, and cribbing materials should be in good, serviceable condition.

8.1.3 Hydraulic rams should be equipped with spherical bearing plates or should be in complete and firm contact with the bearing surfaces and properly aligned so as to avoid eccentric loading.

8.1.4 Loads should not be hoisted, swung, or suspended over personnel and should be controlled by tag lines.

8.1.5 The attachment of the foundation to the crossbeam or reaction frame should be designed and installed to transmit the required loads with an adequate factor of safety.

8.1.6 Rams, bearing plates, test frame members, etc., for all tests should be firmly fixed in place, adequately blocked, or attached as to prevent slippage upon release of load.

8.1.7 Only authorized personnel are to be permitted within the immediate test area.

8.1.8 High hydraulic pressures generally are required for prototype foundation tests; therefore, eye protection should be used to prevent injury in the event of line breakage.

9. Calibration and Standardization

9.1 Verify that equipment is currently calibrated in accordance with the applicable calibration procedures. If the calibration is not current, perform the calibration before using the equipment for this procedure.

USBR 1007 Calibrating Dial Indicators
USBR 1008 Calibrating Linear Variable Differential Transformers
USBR 1045 Calibrating Force Transducers (Load Cells)
USBR 1050 Calibrating Pressure Transducers

9.2 If the load measurement system is assembled in a manner such that the applied load can differ from the indicated load, the equipment should be calibrated as a unit.

9.3 Prior to the test program, calibrate the load cell or equivalent device to an accuracy of ±2 percent of the maximum anticipated load. If damage to the equipment

is suspected or the test program is lengthy, the equipment should be recalibrated.

9.4 When a calibrated load cell is not used, the complete jacking system including the hydraulic ram, hydraulic pump, and pressure gauge is to be calibrated as a unit before each test or series of tests in a test program to an accuracy of ±5 percent of the maximum anticipated load. The hydraulic ram is to be calibrated over the complete range of piston stroke for both increasing and decreasing loads.

9.5 Furnish calibration reports for all testing equipment for which calibration is required. The temperatures at which the calibrations were performed should be indicated in the reports because equipment calibrations should be checked in the field prior to performing any tests, as it may be necessary to recheck the calibrations if temperatures are significantly different.

10. Conditioning

10.1 Before testing piles or other foundations which are driven into cohesive soils, sufficient time should be allowed for dissipation of excess pore-water pressure that may have resulted from driving and to permit the time-dependent gain in soil strength.

NOTE 9.–The length of the waiting period will depend on factors such as the amount of excess pore-water pressure generated, the degree of soil structure disturbance, and the soil properties. The period could range from 1 to 30 days, or longer. The actual length of the waiting period required may be determined by testing or from prior experience.

10.2 Before testing grouted anchor bar foundations, sufficient time must be allowed to permit the grout to set and achieve the specified 28-day unconfined compressive strength.

10.3 When testing foundations in granular soils in dewatered excavations which will be submerged during service, the ground-water level should be maintained as near to the existing ground surface as possible, and the depth to the ground-water level should be measured and recorded during the test. Ground-water levels during the test must be considered also in the design of the reaction/support system.

11. Procedure

11.1 Where feasible, the immediate area around the test foundation should be excavated to the proposed final grade. The test foundation should be cut off or extended to the proper grade as necessary to permit construction of the load application/support apparatus, placement of the testing and instrumentation equipment, and observations of the instrumentation.

11.2 When testing piles or other slender foundation elements, apply tensile test loads with a hydraulic ram placed in line with the central longitudinal axis of the pile. For all types of embedded foundations, the test loads should simulate—in both direction and point of application—the anticipated structural loading.

11.2.1 *Loading Procedure.*–Unless otherwise specified, load the foundation to 200 percent of the anticipated foundation load or to failure, whichever occurs first. Use load increments of not more than 25 percent of the design load. Maintain each load increment until the rate of foundation movement is not greater than 0.01 inch per hour (0.25 mm/h), but no longer than 2 hours or, in the case of other types of foundations, until the movement equals some specified amount. In both cases, the amount of movement possible during the failure phase of the test may be governed by the maximum travel (stroke) of the loading equipment. Provided that the foundation has not failed, remove the total test load anytime after 12 hours if the movement over a subsequent 1-hour period is not greater than 0.01 inch (0.25 mm); otherwise, allow the total test load to remain on the foundation for 24 hours. After the required 12- to 24-hour hold time, remove the load in decrements of 25 percent of the total test load with a 1-hour period between decrements. If failure occurs, continue loading piles until the movement equals 15 percent of the largest butt diameter or diagonal cross-section dimension of the pile tested.

NOTE 10.–Procedures for conducting other tests on piles such as loading in excess of 200 percent of design load, cyclic, constant time interval, constant rate of loading, and quick load can be found in ASTM D 3689.

NOTE 11.–Testing to failure provides valuable information for design and is recommended for tests performed prior to completion of foundation design or to evaluate comparative performances of different types of foundations. Such testing assists in the selection of optimum foundation type and design load.

NOTE 12.–If the foundation approaches or has reached incipient failure at the full test load, consideration may be given to decreasing the standard loading increments during the latter stages of the test or subsequent tests.

11.3 Record the required axial movement readings at each properly identified gauge, scale, or reference point as nearly simultaneously as practicable. Clearly indicate and explain any adjustments made to instrumentation or to data recovered in the field.

11.3.1 *Measuring Procedure.*–Record readings of time, load, and foundation movement immediately before and after the application of each load increment or the removal of a load increment. Record additional readings after application of each load increment at the following intervals: 2, 4, 8, 15, 30, 45, 60, 80, 100, and 120 minutes. During periods when the load is held constant for more than 2 hours, record readings at 1-hour intervals. During unloading, record readings at 30-minute intervals between decreases in load. After reducing the load to zero, record readings after 1, 2, and 12 hours.

11.3.2 *Level Readings.*–Level readings should be taken on the reference beams and on the reaction system using a surveyer's level or transit and target rod or scale to determine if any excessive movement occurs. Such readings should be recorded before any test load is applied,

at the proposed design load, at the maximum test load, and after all the load has been removed. Intermediate readings may be required if results during testing appear to be unusual.

NOTE 13.–Depending on the type of foundation, the loading pattern anticipated to act on the foundation, soil type, etc., longer or shorter load intervals, other allowable movements during a load interval, or different reading intervals may be specified.

12. Calculations or Interpretation of Results

12.1 Interpretation or analysis of the test results, or the application thereof to a foundation is not within the scope of this procedure.

13. Report

13.1 The report of the foundation test shall include the following information, when applicable:

13.1.1 *General*:

- Project identification
- Location
- Personnel performing test(s)

13.1.2 Type of foundation, method of installation, and loading and measurement systems:

- Description of foundation — size, length, material, and date of manufacture
- Foundation installation equipment used and date installed
- Apparatus for applying loads — include drawings and calibration dates
- Instrumentation for measuring movements — include drawings and calibration dates

13.1.3 *Site Conditions.*–Include drawings and photographs—if available—of the test site.

13.1.4 *In-Place Soil Conditions.*–Include logs of any borings, results of any in-place or laboratory tests, and the elevation of the ground-water table, if required.

13.1.5 *Test Results*:

- Tabulation of load-time-movement readings.
- Graphic representation of test results in the form of load-movement and time-movement plots.
- Record elevations of the top of the foundation, ground surface, reference beam(s), reaction piles, and cribbing.
- Ground-water table fluctuations during testing.

13.1.6 Remarks regarding any departures from the test procedure described above, or any unusual occurrences during installation or testing of the foundation.

13.1.7 Equipment calibration reports.

UNITED STATES DEPARTMENT OF THE INTERIOR
BUREAU OF RECLAMATION

USBR 9300-89

PROCEDURE FOR

CHECKING, ROUNDING, AND REPORTING OF LABORATORY DATA

INTRODUCTION

This procedure is under the jurisdiction of the Concrete and Structural Branch, code D-3730, and the Geotechnical Services Branch, code D-3760, of the Research and Laboratory Services Division, Denver Office, Denver, Colorado. The procedure is issued under the fixed designation USBR 9300. The number immediately following the designation indicates the year of acceptance or the year of last revision.

1. Scope

1.1. This designation outlines procedures for checking data on laboratory data forms, rounding numbers, and recording and reporting of the data.

1.2 This procedure is to be used by Bureau of Reclamation laboratories engaged in testing of cement, concrete, aggregates, soil, and rock, and is to be used to provide uniformity and consistency in handling data, data forms, and reports.

2. Applicable Documents

2.1 *USBR Procedures*:
USBR 3000 Using Significant Digits in Calculating and Reporting Laboratory Data

2.2 *ASTM Standards*:
E 29 Indicating Which Places of Figures Are to Be Considered Significant in Specified Limiting Values
E 380 Metric Practice

2.3 *Bureau Document*:
Metric Manual

3. Terminology

3.1 *A Term Specific to This Designation Is*:

3.1.1 *Rounding.*-The process of reducing the number of digits in a number according to rules relating to the required accuracy of the value.

4. Recording Data on Original Data Forms

4.1 The heading of each data form must be completed in full. The initials and surname of appropriate persons are to be entered in the space for "tested by," "computed by," and "checked by" (see example on fig. 1).

4.2 The portion of the data form for auxiliary tests must show the year of the version of the procedure used (see fig. 1).

NOTE 1.-Since procedures may be revised, it is important that the version of the procedure used be identified.

4.3 All measured or computed data are to be recorded in a legible manner on the data form. If a number is computed or recorded erroneously, draw a line through the incorrect number and write the correct value to the side or above the incorrect entry. In No Circumstance Shall the Original Value Be Erased or Written Over.

4.4 All measured or computed data must be recorded as specified in the procedure (e.g., "record to the nearest 0.01 lbm"). For those cases, where the number of digits is not specified, a value should be recorded to one more digit than prescribed by the rules of significant digits as described in USBR 3000.

4.5 Any observation made during the test that might have an effect on the results, or on use of the results, should be written on the data form. If information is placed on the back of the form, clearly indicate on the front that additional information is on the back.

5. Checking Data on Original Data Forms

5.1 All numerical data that are the result of a calculation must be checked by an individual other than the person who computed and recorded the data.

5.2 All data transferred to a data form from another source, such as other data forms, calibrations values, etc., shall be checked by an individual other than the person recording the data.

5.3 All recorded data that are correct must show a checkmark, preferably in red, by each number checked (see fig. 1).

NOTE 2.-Example data forms included in the other USBR procedures contained in this manual do not show checkmarks in order to illustrate the required data in a neat and legible manner. Completed data forms should be similar to figure 1 or 2.

5.4 If recorded data are incorrect, draw a line through the number and write the correct number to the side or above the incorrect value. In No Circumstance Shall the Original Value Be Erased or Written Over.

5.4.1 The same method or system of computation must be used for checking the data as was used in calculating the recorded values.

NOTE 3.–Numbers calculated by "chain" computations with a calculator or computer may result in different values than rounding values for each entry and using the rounded value in subsequent calculations. The calculator or computer carries more digits than the rounded number when a "chain" computation is being used.

5.4.2 Data corrected by the checker should be verified by a person other than the checker and a checkmark shown by the correct value. An entry should be made on the data form "corrections verified by _____(Name)_____."

5.5 The name of the checker and the date the data were checked must be entered on the form heading. The last name of the checker must be completely written out.

5.6 It is the responsibility of the checker to ensure that all numbers are correct, recorded to the proper number of places specified in the procedure, and that rounding is in conformance with this designation. The checker should also review the measured data for reasonableness (e.g., a recorded mass of 179 lbm when the maximum capacity of a scale is known to be 100 lbm).

5.7 If necessary changes are made to data subsequent to the final checking, changes must be checked and the changes explained in the *Remarks* section of the data form.

6. Checking Data Presented on Graphs, Tables, and Figures Reporting Laboratory Data

6.1 All data shown on graphs, tables, and figures must be checked by an individual other than the person who originally prepared the graph, table, or figure.

6.2 The original figure should not show checkmarks for each value. It is recommended that a copy of the original graph or figure be made and checkmarks be placed by each value on the copy (see example on fig. 2).

6.3 Once the graph, table, or figure is considered correct, the name of the person who prepared the graph, table, or figure; the date prepared; the name of the checker; and the date the data were checked must be entered in the space provided or in the lower left corner of the original graph, table, or figure.

7. Rounding Numbers

7.1 When a numerical value is to be rounded to fewer digits than the total number available, the following procedure is to be followed:

When the first digit dropped is:	*The last digit retained is:*	*Examples*
< 5	Unchanged	2.44 to 2.4
> 5	Increased by 1	2.46 to 2.5
Exactly 5	Increased by 1	2.55 to 2.6
5 followed only by zeros	Increased by 1	2.5500 to 2.6

The same rules apply when rounding a number with many digits to a number with few digits. A computer or calculator may display the answer to a computation as ten digits and the answer is to be recorded to two digits. For example, the number 2.3456789 would be rounded to 2.3; the first digit dropped would be the 4.

Other examples:

2.49999 to 2.5
2.49999 to 2
2.55555 to 2.56
2.55555 to 3
2.50000 to 3

7.2 The examples shown above, exactly 5 or 5 followed by zeros, are rounded differently than indicated in the USBR *Metric Manual*, ASTM E 380, and ASTM E 29. These documents all indicate that the number is to be rounded to the closest even number. In the example (shown above) 2.50000 would be rounded to 2 and not 3. Unfortunately, calculators and computers do not follow this rule and always round up. Recognizing the wide-spread use of calculators and computers, the policy as stated in subparagraph 7.1 should be followed.

8. Reporting Data

8.1 Data reported as result(s), of the test, must conform with instructions in the respective procedure, since some reported values are different than what is recorded on the data form. (For example, the computed value for liquid limit of a soil is recorded on the data form to the nearest 0.1 percent but is to be reported to the nearest 1 percent.) If the reported value is not specified, the data should be reported in accordance with the rules of significant digits as described in USBR 3000.

7-1391 (12-86) Bureau of Reclamation

LABORATORY COMPACTION TEST

Designation USBR 5500 - 89

SAMPLE NO.	PROJECT	FEATURE
55T-13 ✓	Example	XYZ Dam

TESTED BY	DATE	COMPUTED BY	DATE	CHECKED BY	DATE
A. Green	5/28/89	B. Brown	5/29/89	C. White	5/29/89

Blows per layer 25 ✓ No. of layers 3 ✓ Height of drop 18.0 ✓ in

Mass of tamping rod 5.50 ✓ lbm Volume of mold 0.0497 ✓ ft^3

Specimen No.		1	2	3	4	5		
Wet unit weight determinations								
Water added	(g or ml)	~~180~~ 80	160	240	330	420		
Mass of mold + wet soil	(lbm)	11.13	11.52	11.87	11.84	11.69		
Mass of mold	(lbm)	5.41	5.41	5.41	5.41	5.41		
Mass of wet soil	(lbm)	5.72 ✓	~~6.41~~ 6.11 ✓	6.46 ✓	6.43 ✓	6.28 ✓		
Wet unit weight	(lbf/ft^3)	115.1 ✓	~~129.0~~ 122.9 ✓	130.0 ✓	129.4 ✓	126.4 ✓		
Penetration resistance determinations								
Needle No.		40	40	20	10	4		
Area of needle	(in^2)	1/40	1/40	1/20	1/10	1/4		
Penetrometer reading	1	72	45	50	50	40		
	(lbf) 2	73	47	49	49	37		
	3	72	46	51	49	39		
Average reading	(lbf)	72 ✓	46 ✓	~~60~~ 50 ✓	49 ✓	39 ✓		
Penetration resistance	(lbf/in^2)	2880 ✓	1840 ✓	1000 ✓	490 ✓	156 ✓		
Moisture content determinations								
Dish No.		15	44	45	55	20		
Mass of dish + wet soil	(g)	382.4	386.7	382.1	381.5	369.5		
Mass of dish + dry soil	(g)	359.1	359.6	352.4	347.3	330.6		
Mass of dish	(g)	129.4 ✓	133.8 ✓	140.6 ✓	138.6 ✓	118.0 ✓		
Mass of water	(g)	23.3 ✓	27.1 ✓	29.7 ✓	34.2 ✓	38.9 ✓		
Mass of dry soil	(g)	229.7 ✓	225.8 ✓	211.8 ✓	208.7 ✓	212.6 ✓		
Moisture content	(% of dry mass)	10.1 ✓	12.0 ✓	14.0 ✓	16.4 ✓	~~18.2~~ 18.3 ✓		
Dry unit weight determinations								
Dry unit weight	(lbf/ft^3)	104.5 ✓	109.7 ✓	114.0 ✓	111.2 ✓	106.8 ✓		

Remarks: Corrections verified by D. Black .

Auxiliary tests:

USBR 5205 - 89
USBR 5300 - 89
USBR 5320 - 89
USBR 5505 - 89

GPO 849-889

Figure 1. - Checked data sheet — example.

7-1414 (9-85)
Bureau of Reclamation

COMPACTION - PENETRATION RESISTANCE CURVES

Designation USBR 5500 - 89

SAMPLE NO.	FEATURE	PROJECT
55T-13	XYZ Dam	Example

Hole No. AP-5A Plotted by B. Brown Date 5/28/89

Depth 3.2 - 7.8 ft ☒ m ☐ Checked by C. White Date 5/29/89

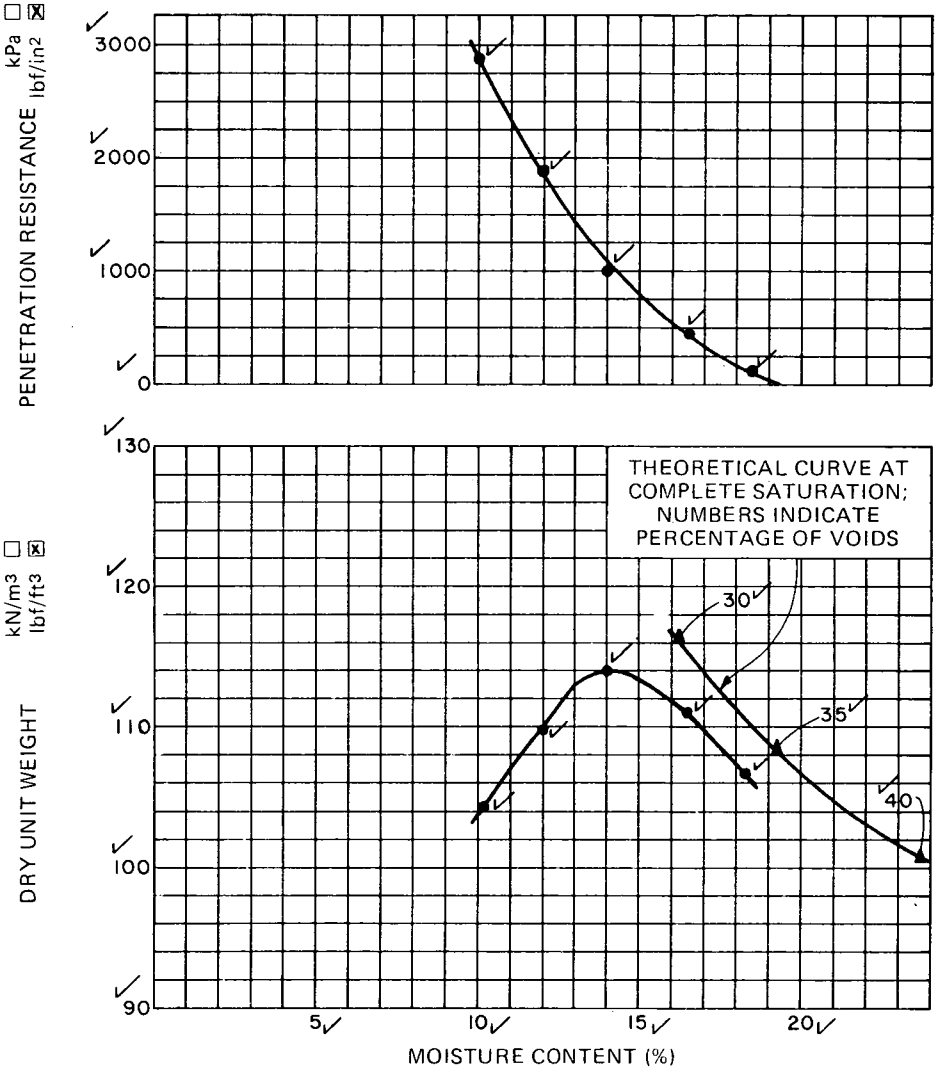

CLASSIFICATION SM

Gravel	13	%
Sand	50	%
Fines	37	%

ATTERBERG LIMITS

Liquid Limit	33	%
Plasticity Index	4	%
Shrinkage Limit		%

SPECIFIC GRAVITY

Minus No. 4	2.66	
Plus No. 4		
Bulk		
Apparent		
Absorption		%

Remarks

COMPACTION

Method

Percent larger than tested	13	
Maximum dry unit weight	114.0	☐ kN/m3 ☒ lbf/ft3
Optimum moisture content	14.0	%
Degree of saturation @ opt		%
Penetration resistance @ opt	1000	☐ kPa ☒ lbf/in2

GPO 848-759

Figure 2. - Checked plotting — example.

A free pamphlet is available from the Bureau entitled "Publications for Sale." It describes some of the technical publications currently available, their cost, and how to order them. The pamphlet can be obtained upon request from the Bureau of Reclamation, Attn D-7923A, PO Box 25007, Denver Federal Center, Denver CO 80225-0007.