Specifications for the National Tunnel Inventory

U.S.Department of Transportation
Federal Highway Administration

July 2015
Publication No. FHWA-HIF-15-006

FOREWORD

This document was developed in coordination with the National Tunnel Inspection Standards (NTIS) regulation 23 CFR 650 Subpart E and the Tunnel Operations, Maintenance, Inspection and Evaluation (TOMIE) Manual. It is intended to supplement the NTIS and provide the specifications for coding data required to be submitted to the National Tunnel Inventory (NTI). Data in the NTI will be used to meet legislative reporting requirements and provide tunnel owners, the Federal Highway Administration (FHWA) and the general public with information on the number and condition of the Nation's tunnels.

I would like to acknowledge the initial work done on tunnel inspection through a joint project between the FHWA and the Federal Transit Authority which developed the Highway and Rail Transit Tunnel Inspection Manual in 2003, and the subsequent update in 2005. This document laid the foundation for highway tunnel inspection using a general condition rating methodology. In this coding document, we move from general condition ratings to element condition states to be consistent with the inspection methodology used for National Highway System (NHS) bridges. By moving to element condition states, tunnel owners should be able to more easily integrate tunnel inventory data into an asset management program and determine the need for maintenance and/or repair of their highway tunnels.

Finally, I would like to acknowledge some of those who were involved in the development of this specification; AASHTO Technical Committee T-20 on Tunnels and the FHWA Review Team.

Joseph L Hartmann, Ph.D., P.E.
Director, Office of Bridges and Structures

Specifications for the National Tunnel Inventory

Report No. FHWA-HIF-15-006

Office of Infrastructure
Office of Bridges and Structures
Washington, DC 20590

July 2015

Abbreviated Table of Contents

Section 1: Introduction

1.1—History

Following the tragic ceiling collapse in the Interstate 90 Connector Tunnel in Boston, Massachusetts on July 10, 2006, the National Transportation Safety Board's Highway Accident Report, NTSB Number HAR-07/02, identified several safety issues including, "*Inadequate regulatory requirements for tunnel inspections*". On July 6, 2012, the President signed the Moving Ahead for Progress in the 21st Century Act (MAP-21), which requires the Secretary to establish national standards for tunnel inspections. Recognizing that the safety and security of our Nation's tunnels are of vital importance, and as a result of the legislative mandate in MAP-21, FHWA established the National Tunnel Inspection Standards and corresponding manuals and guides to accomplish the inspections.

The proper inventory and assessment of the condition of highway tunnel elements is the cornerstone of sound tunnel management. The introduction of element assessment methods in the early 1990s represented a significant advancement in infrastructure inspection practice and has been adopted by the vast majority of all State Transportation Departments in the United States for bridges. Bridge owners nationwide have recognized the benefits of detailed condition assessments through the use of the raw inspection information, expanded performance measures, and bridge management system deterioration forecasting and evaluation. As the use of element level inspection techniques has proliferated, the need to include highway tunnels has been identified. These specifications incorporate tunnel elements including: structural, civil, mechanical systems, electrical and lighting systems, fire/life safety/security systems, signs, and protective systems. The goal of these specifications is to comprehensively layout how to inventory and document the condition of tunnels in a way that can be standardized across the nation while providing the flexibility to be adapted to both large and small agency settings. These specifications are not intended to supplant proper training or the exercise of sound engineering judgment by the Inspection Team Leader.

The FHWA Specifications for the National Tunnel Inventory builds on the element level condition assessment methods originally developed in the AASHTO Guide for Commonly Recognized Structural Elements and recently improved in the AASHTO Manual for Bridge Element Inspection. The multi-path distress language provides the means to incorporate defects within the overall condition assessment of the element. The overall condition of an element can be utilized in this aggregate form, or broken down into specific defects present as desired by the agency for tunnel management system (TMS) use. The complete set of elements capture the components necessary for an agency to manage all aspects of the tunnel inventory utilizing the full capability of a TMS.

1.2—Purpose of the Specifications

These specifications have been prepared for use by State, Federal and other agencies in recording and coding data elements that will comprise the National Tunnel Inventory. By having a complete and thorough inventory, an accurate report can be made to Congress on the number and condition of the Nation's highway tunnels.

The coded items in these specifications are considered to be an integral part of the database that can be used to meet several Federal reporting requirements, as well as part of the States' needs. These requirements are set forth in the National Bridge and Tunnel Inventory and Inspection Standards (Section 144 of Title 23, United States Code). A complete, thorough, accurate and compatible database is the foundation of an effective TMS.

The FHWA Tunnel Operations, Maintenance, Inspection and Evaluation (TOMIE) Manual discusses the various items of information that are to be recorded as part of original

tunnel reports. That Manual discusses inspection procedures and the preparation of detailed reports about the tunnel elements. These reports will be the basis for the recording values for many of the data elements shown in the Specifications.

State, Federal and other agencies are encouraged to use the codes and instructions in these Specifications. However, its direct use is optional; each agency may use its own code scheme provided that the data are directly translatable into the Specifications format. When data are requested by FHWA, the format will be based on the codes and instructions in these Specifications. An agency choosing to use its own codes shall provide for translation or conversion of its own codes into those used by these Specifications. In other words, agencies are responsible for having the capability to obtain, store and report certain information about highway tunnels whether or not these Specifications are used. Any requests by FHWA for submittals of these data will be based on the definitions, explanations, and codes supplied in the Specifications and the TOMIE Manual.

1.3—Organization of the Specifications

The FHWA Specifications for the National Tunnel Inventory are organized into the following Sections:

Section 1 (***Introduction***) is comprised of subsections devoted to History, Purpose of the Specifications, Organization of the Specifications, Units, Definitions and Acronyms.

Section 2 (***Inventory Items***) is comprised of tunnel inventory items (Identification, Age and Service, Classification, Geometric Data, Inspection, Load Rating and Posting, Navigation, and Structure Type & Material) by category to facilitate ease of use by tunnel inspectors in the field.

Section 3 (***Elements***) is comprised of tunnel elements (Structural, Civil, Mechanical Systems, Electrical and Lighting Systems, Fire/Life Safety/Security Systems, Signs, and Protective Systems) by general element type, material, and in accordance to their physical location in the tunnel to facilitate ease of use by tunnel inspectors in the field.

Section 4 (Index of Inventory Items and Elements) is a list of all of the items and elements in this Specification from Sections 2 and 3.

Section 5 (Tunnel Coding Example) is an example that demonstrates how to take information from an inspection report and convert it into the inventory and elements described in this manual.

Section 6 (References) is a list of other documents which support tunnel inspection or show the similarities between bridge and tunnel inspections.

1.4—Units

Throughout the Specifications, all units are referenced as U.S. customary units.

1.5—Definitions

American Association of State Highway and Transportation Officials (AASHTO) Manual. "The Manual for Bridge Evaluation," as published by the American Association of State Highway and Transportation Officials as incorporated by reference in the NBIS, see § 650.317.

At-grade roadway. Paved or unpaved travel ways within the tunnel that carry vehicular traffic and are not suspended or supported by a structural system.

Complex tunnel. A tunnel characterized by advanced or unique structural elements or functional systems.

Damage inspection. This is an unscheduled inspection to assess structural damage resulting from environmental factors or human actions.

Functional systems. Non-structural systems, such as electrical, mechanical, fire suppression, ventilation, lighting, communications, monitoring, draining, traffic signals, emergency response (including egress, refuge room spacing, or carbon monoxide detection), or other traffic safety components.

Hands-on. Inspection within arm's length of the component. Inspection uses visual techniques that may be supplemented by nondestructive testing.

In-depth inspection. A close-up inspection of one, several, or all tunnel structural elements or functional systems to identify any deficiencies not readily detectable using routine inspection procedures; hands-on inspection may be necessary at some locations. In-depth inspections may occur more or less frequently than routine inspections, as outlined in the tunnel-specific inspection procedures.

Initial inspection. The first inspection of a tunnel to provide all inventory and appraisal data and to determine the condition baseline of the structural and functional systems.

Legal load. The maximum legal load for each vehicle configuration permitted by law for the State in which the tunnel is located.

Load rating. The determination of the live load carrying capacity within or above the tunnel using structural plans and supplemented by information gathered from a routine, *in-depth or special inspection.*

National Tunnel Inventory (NTI). The aggregation of structure inventory and appraisal data collected to fulfill the requirements of the National Tunnel Inspection Standards. Each State shall prepare and maintain an inventory of all tunnels subject to the NTIS.

National Tunnel Inspection Standards (NTIS). Federal regulations establishing requirements for inspection procedures, frequency of inspections, qualification of personnel, inspection reports, and preparation and maintenance of a State tunnel inventory. The NTIS apply to all structures defined as tunnels located on all public roads.

Portal. The entrance and exit of the tunnel exposed to the environment; portals may include bare rock, constructed tunnel entrance structure, or buildings.

Routine inspection. A regularly scheduled comprehensive inspection encompassing all tunnel structural elements and functional systems and consisting of observations and measurements needed to determine the physical and functional condition of the tunnel, to identify any changes from initial or previously recorded conditions, and to ensure that tunnel components continue to satisfy present service requirements.

Special inspection. An inspection, scheduled at the discretion of the tunnel owner, used to monitor a particular known or suspected deficiency.

Tunnel. An enclosed roadway for motor vehicular traffic with vehicle access limited to portals, regardless of type of structure or method of construction. Tunnels do not include bridges or culverts inspected under the National Bridge Inspection Standards (23 CFR 650 – Subpart C – National Bridge Inspection Standards). Tunnels are structures that require, based on owner's determination, special design considerations that may include lighting, ventilation, fire protection systems, and emergency egress capacity.

1.6—Acronyms

AASHTO – American Association of State Highway and Transportation Officials
ADT – Average Daily Traffic
ADTT – Average Daily Truck Traffic
AS – Allowable Stress
ASD – Allowable Stress Design
CALTRANS – California Department of Transportation
FHWA – Federal Highway Administration
FIPS – Federal Information Processing Standard (standard codes for States)
HAR – Highway Accident Report
HPMS – Highway Performance Monitoring System
ID - Identification
LF – Load Factor
LFD – Load Factor Design
LRFR – Load and Resistance Factor Rating
LRS – Linear Referencing System (spatial coordinate system)
NASA – National Aeronautics and Space Administration
NHS – National Highway System
NTI – National Tunnel Inventory
NTIS – National Tunnel Inspection Standards
NTSB – National Transportation Safety Board
PennDOT – Pennsylvania Department of Transportation
RF – Rating Factor
STRAHNET – Strategic Highway Network
TOMIE Manual – Tunnel Operations, Maintenance, Inventory and Evaluation Manual

(THIS PAGE INTENTIONALLY LEFT BLANK)

Section 2: Inventory Items

2.1—Introduction

This section is comprised of tunnel inventory items arranged by category to facilitate ease of use by tunnel inspectors in the field.

Inventory Item Name			
Format XX			Item ID A.#
Specification		Commentary	
Detailed description of requirements for each inventory item.		A series of explanations for each inventory item.	
Examples			
Example Description	Example Coding		

The format of an item is broken into 6 parts: (1) Inventory Item Name, (2) Format, (3) Item ID, (4) Specification, (5) Commentary and (6) Examples.

The Inventory Item Name is the name used to describe that particular item.

The Format details how the item should be coded by using one of following four descriptions and lengths:

- AN# (Alpha Numeric where # is the length of the field)
  - AN2 is an example of an alpha numeric with a limit of 2 characters, such as CA
- N (X,Y) (Numeric where X is the length of the field and Y is the number of decimal places)
  - N (2,0) is an example of a numerical value, such as 10
  - N (5,1) is an example of a numerical value such as 1016.1
- D (Date recorded as MMDDYYYY)
  - D is an example of a date, such as 02282013
  - Leading zeros are required for date formats

The Item ID is a unique indicator assigned to each tunnel item, it is a letter followed by a number. Inventory items are identified by a letter based on the section and a number based on

the order of appearance in that section. Identification items are identified with an “I”, Age and Service items are identified with an “A”, Classification items with a “C”, Geometric Data items with a “G”, Inspection items with a “D”, Load Rating and Posting items with a “L”, Navigation items with “N”, and Structure Type & Material items with a “S”.

The Specifications and Commentary portions provide the detailed description of each inventory item and some explanation or additional clarification to consider for coding each item. The Specification portion is the required information to be recorded and shall be followed. Where there is ambiguity in the Specification, the FHWA Division office should be consulted for clarification and/or additional guidance. The Commentary portion is intended to provide clarifying information and general guidance for recommended methods to meet the Specification.

The Example portion provides examples of how to code the item when compared to certain situations.

2.2—Identification Items

The items in this section uniquely identify and locate the tunnel.

Item ID

I.1 Tunnel Number
I.2 Tunnel Name
I.3 State Code
I.4 County Code
I.5 Place Code
I.6 Highway Agency District
I.7 Route Number
I.8 Route Direction
I.9 Route Type
I.10 Facility Carried
I.11 LRS Route ID
I.12 LRS Mile Point
I.13 Tunnel Portal's Latitude
I.14 Tunnel Portal's Longitude
I.15 Border Tunnel State or Country Code
I.16 Border Tunnel Financial Responsibility
I.17 Border Tunnel Number
I.18 Border Tunnel Inspection Responsibility

Tunnel Number			
Format AN15			Item ID I.1
Specification		Commentary	
Record the unique tunnel number assigned according to agency policy for each tunnel meeting the NTIS Definition. Do not change the tunnel number once it has been assigned and recorded.		There are no national policies established for assigning unique tunnel numbers. Therefore, each State Transportation Department, Federal agency, or Tribal government develops its own policy for assigning unique tunnel numbers. It is preferable that one tunnel number be assigned to tunnels with multiple bores including ramps where they are connected, such as those sharing ventilation systems, etc. When recording separate Tunnel Numbers for tunnels carrying multiple bores it is recommended to append the tunnel number with “L”, “C” or “R” looking stations ahead, where L=left, C=center, and R=right. Consult the local FHWA Division office for questions concerning assigning tunnel numbers to unique or complex tunnels.	

Tunnel Name

Format			Item ID
AN100			I.2

Specification	Commentary
Record the tunnel name assigned by the agency. If the tunnel is not named, leave this item blank.	There are no national policies established for assigning unique tunnel names. Therefore, each State Transportation Department, Federal agency, or Tribal government develops their own policy for assigning unique tunnel names. It is preferable that one tunnel name be assigned to tunnels with multiple bores.

Examples

Tunnel Name	Code
Squirrel Hill Tunnel	Squirrel Hill Tunnel
Fort Pitt Tunnel	Fort Pitt Tunnel
Blue Mountain Tunnel	Blue Mountain Tunnel

State Code

Format			Item ID
N (2,0)			I.3

Specification	Commentary
Record the State code where the tunnel is located using one of the codes in the table below.	State codes are derived from the FIPS, Standard Codes For States (FIPS PUB 5-2).

Code	State Name
1	Alabama
2	Alaska
4	Arizona
5	Arkansas
6	California
8	Colorado
9	Connecticut
10	Delaware
11	District of Columbia
12	Florida
13	Georgia
15	Hawaii
16	Idaho
17	Illinois
18	Indiana
19	Iowa
20	Kansas
21	Kentucky
22	Louisiana
23	Maine
24	Maryland
25	Massachusetts
26	Michigan
27	Minnesota
28	Mississippi
29	Missouri
30	Montana
31	Nebraska
32	Nevada

Specification Cont.	Commentary Cont.
Table cont.	State codes are derived from the FIPS, Standard Codes For States (FIPS PUB 5-2).

Code	State Name
33	New Hampshire
34	New Jersey
35	New Mexico
36	New York
37	North Carolina
38	North Dakota
39	Ohio
40	Oklahoma
41	Oregon
42	Pennsylvania
44	Rhode Island
45	South Carolina
46	South Dakota
47	Tennessee
48	Texas
49	Utah
50	Vermont
51	Virginia
53	Washington
54	West Virginia
55	Wisconsin
56	Wyoming
60	American Samoa
64	Federated States of Micronesia
66	Guam
68	Marshall Islands
69	Commonwealth of the Northern Mariana Islands
70	Palau
72	Puerto Rico
74	U.S. Minor Outlying Islands
78	U.S. Virgin Islands

County Code

Format			Item ID
N (3,0)			I.4

Specification	Commentary
Record the FIPS code for the county, parish or borough in which the tunnel is located.	Use the FIPS codes in the current version of the Census of Population and Housing - Geographic Identification Code Scheme to determine the appropriate code. County, parish or borough codes can be found through a link at the following web site: http://www.census.gov/geo/reference/ansi.html Codes for county-equivalent entities of Puerto Rico can be found in Appendix A through a link at the above web site.

Examples

County Code	Code
Lincoln County, Nebraska	111
Queens, New York	81
Orleans Parish, Louisiana	71

Place Code

Format			Item ID
N (5,0)			I.5

Specification	Commentary
Record the FIPS place code for the city, town, township, village, and other census-designated place where the tunnel is located. Record 0 if there is no FIPS place code for the tunnel's location.	Use the FIPS codes in the current version of the Census of Population and Housing - Geographic Identification Code Scheme to determine the city, town, township, village, or other census-designated place code. FIPS place codes can be found through a link at the following web site: http://www.census.gov/geo/reference/ansi.html

Examples

Place Code	Code
Washington, DC	50000
Tallahassee, FL	70600
North Platte, NE	35000

Highway Agency District

Format			Item ID
AN2			I.6

Specification	Commentary
Record the State Transportation Department district or region number/abbreviation where the tunnel is located. Federal agencies and Tribal governments should record this item with their District system.	Where districts or regions are identified by number, use the existing number. Where districts or regions are identified by name, use an abbreviated name.

Examples

Highway Agency District	Code
District Six	06
Region Two	02
Northwest Region	NW

Route Number

Format			Item ID
AN5			I.7

Specification	Commentary
Record the route number that represents the route carried by the tunnel. Include letters that are used as part of the route numbers. Do not record the route direction for divided highways. Identify that information in the route direction item. When multiple routes use the same lane or set of lanes, complete only one Route Number for the lanes using the highest class of route based on Item ID C.7 - Functional Classification. Record 0 for tunnels on roads without route numbers.	When concurrent routes are of the same hierarchy level, records the lowest numbered route.

Examples

Route Number	Code
I-35 southbound	35
Undivided State Highway 9W	9W
I-35W southbound	35W
I-35 and US-77	35
Road without route number	0

Route Direction

Format			Item ID
N (1,0)			I.8

Specification

Record the route direction using one of the following codes for the route carried by the tunnel:

Route Direction Code

Code	Description
0	Two route directions
1	North
2	East
3	South
4	West

Commentary

Use code 0 when the tunnel carries both directions of a divided highway.

Use code 0 when a roadway is undivided.

Route direction is considered the designated direction of the route.

Examples

Route Direction	Code
I-35 southbound	3
Undivided State Highway 9W	0
I-35W southbound	3

Route Type

Format			Item ID
N (1,0)			I.9

Specification

Record the route type using one of the following codes:

Code	Description
1	Interstate highway
2	U.S. numbered highway
3	State highway
4	County highway
5	City street
6	Federal lands road
7	State lands road
8	Other (includes toll roads not otherwise indicated above)

When two or more routes are concurrent, record the lowest applicable code.

Commentary

When a roadway crosses through Federal lands such as national parks, national forests or department of defense facilities and does not meet the description of codes 1 through 5 then use code 6.

When a public roadway crosses through State lands such as State parks or State forests and does not meet the description of codes 1 through 5, use code 7.

Ramps should be coded based on the lowest applicable code of the routes it connects to.

Examples

Route Type	Code
Interstate 35 and US-77	1
I-35 southbound	1
Undivided State Highway 9W	3
I-35W southbound	1
State Highway 43 and Harlem Avenue	3

Facility Carried

Format			Item ID
AN100			I.10

Specification	Commentary
Record the name of the facility that is carried through the tunnel.	The owner may include directional or other descriptive information in this field. Official names and local names may be included. The name of the tunnel (i.e. Squirrel Hill Tunnel, Fort Pitt Tunnel, etc.) may be included in this item following the route name.

Examples

Facility Carried	Code
Interstate 90 - Massachusetts Turnpike	Interstate 90 - Massachusetts Turnpike
Interstate 64	Interstate 64
Aurora Avenue, SR99	Aurora Avenue, SR99
John Hanson Highway	John Hanson Highway
I376 – Squirrel Hill Tunnel	I376
I376 – Fort Pitt Tunnel, Inbound	I376 – Fort Pitt Tunnel, Inbound

LRS Route ID			
Format AN120			Item ID I.11
Specification		Commentary	
Record the linear referencing system (LRS) Route ID defined by the State that is reported for the Highway Performance Monitoring System (HPMS) for reporting purposes. The LRS Route ID must match what is reported in HPMS. The LRS Route ID can be left blank if it is not available in HPMS. Not all 120 format spaces must be filled.		The LRS Route ID is not necessarily the same as the route number posted along the roadway, but is a number used to uniquely identify a route within at least a county and perhaps throughout the State for Geographic Information System (GIS) analysis and mapping purposes.	

LRS Mile Point

Format			Item ID
N (8,3)			I.12

Specification	Commentary
Record the LRS mile point to the nearest thousandth. The mile point must be consistent with the LRS Inventory Route and mile point system for the HPMS. For tunnels carrying an LRS inventory route, record the mile point at the tunnel portal for which the lowest LRS Mile Point occurs. The LRS mile point can be left blank if it is not available in HPMS.	The LRS mile point is used to establish the location of the tunnel on the inventory route.

Examples

LRS Mile Point	Code
130.344	130.344
9.600	9.6
No mile point	(blank)

Tunnel Portal's Latitude

Format			Item ID
N (11,8)			I.13

Specification	Commentary
Record the latitude of the tunnel portal in decimal degrees for all tunnels. Record the latitude at the same location for the Item ID I.12 - LRS Mile Point. When Item ID I.12 - LRS Mile Point is blank, record the latitude at the tunnel portal on the edge of the right traveled way in the direction of the route mileage.	Values recorded are assumed to be for the northern hemisphere and are to be consistent with LRS data that uses the North American Datum 1983.

Examples

Tunnel Portal's Latitude	Code
25º 27' 18.55"	25.45515278
31º 5' 50.65"	31.09740278

Tunnel Portal's Longitude

Format			Item ID
N (11,8)			I.14

Specification	Commentary
Record the longitude of the tunnel portal in decimal degrees for all tunnels. Record the longitude at the same location for the Item ID I.12 - LRS Mile Point. When Item ID I.12 - LRS Mile Point is blank, record the longitude at the tunnel portal on the edge of the right traveled way in the direction of the route mileage.	Values recorded are assumed to be for the northern hemisphere and are to be consistent with LRS data that uses the North American Datum 1983.

Examples

Tunnel Portal's Longitude	Code
65º 27' 18.55"	65.45515278
75º 13' 26.69"	75.22408206

Border Tunnel State or Country Code

Format			Item ID
AN2			I.15

Specification	Commentary
Record the neighboring State code using the codes listed in the Item ID I.3 - State Code item. Record this item for border tunnels when any owner within the State's geographical boundaries has some or all of the inspection, preservation, improvement or replacement responsibility. Record the value CA for Canada or MX for Mexico when the tunnel crosses those borders. Leave item blank when the tunnel does not cross a border with another State or Country or when no owner within the state's geographical boundaries has any inspection, preservation, improvement or replacement responsibility.	Use this item to indicate tunnels crossing borders of states or countries. Consistency of submitted data by agencies with shared border tunnel inspection, preservation, improvement or replacement responsibility is essential.

Examples

Border Tunnel State or Count Code	Code
Michigan Border Tunnel with Canada	CA
New York Border Tunnel with New Jersey	34

Border Tunnel Financial Responsibility

Format			Item ID
N (3,0)			I.16

Specification	Commentary
Record the total percent financial responsibility for all entities within the State's geographical boundaries regardless of ownership. Leave item blank when the tunnel does not cross a border with another State or Country or when no owner within the state's geographical boundaries has any inspection, preservation, improvement or replacement responsibility.	The intent of this item is to capture the financial responsibility for all entities within the State's geographical boundaries, regardless of ownership of the tunnel (State, city, county, toll authorities, etc.) and to compare financial responsibility with neighboring states or countries. Financial responsibility includes current and future financial responsibilities for inspection, preservation, improvement or replacement whether by agency or contract forces. Agency financial responsibility may be documented in interagency agreements or memorandums of understanding and included as part of the tunnel file or record.

Examples

Border Tunnel Financial Responsibility	Code
55% Responsibility	55
100% Responsibility	100

Border Tunnel Number			
Format AN15			Item ID I.17
Specification		Commentary	
Record the neighboring state's exact tunnel number as used in the Item ID I.1 - Tunnel Number item. Record this item for border tunnels when any owner within the state's geographical boundaries has shared responsibility for inspection, preservation, improvement or replacement. Leave item blank when the tunnel does not cross a border with another State or Country or when no owner within the state's geographical boundaries has any inspection, preservation, improvement or replacement responsibility. Also leave blank when the bordering country does not have a tunnel number.			

Border Tunnel Inspection Responsibility

Format			Item ID
N (1,0)			I.18

Specification	Commentary
Record the border tunnel inspection responsibility for any entity within the State's geographical boundaries regardless of ownership using one of the following codes: **Code / Description** 0 — No responsibility 1 — Shared responsibility with bordering State or country 2 — Full responsibility Leave item blank when the tunnel does not cross a border with another State or Country or when no owner within the state's geographical boundaries has any inspection, preservation, improvement or replacement responsibilities.	The intent of this item is to capture the border tunnel inspection responsibility for any entity within the State's geographical boundaries, regardless of ownership of the tunnel (State, city, county, toll authority etc.) Agency inspection responsibility may be documented in interagency agreements or memorandums of understanding and included as part of the tunnel file or record.

2.3—Age and Service Items

The items in this section define when the tunnel was constructed, when it was reconstructed and the tunnel's level of service.

Item ID

A.1 Year Built
A.2 Year Rehabilitated
A.3 Total Number of Lanes
A.4 Annual Average Daily Traffic
A.5 Annual Average Daily Truck Traffic
A.6 Year of Annual Average Daily Traffic
A.7 Detour Length
A.8 Service in Tunnel

Year Built

Format			Item ID
N (4,0)			A.1

Specification	Commentary
Record the year in which construction was completed and the tunnel was able to carry traffic. For phased construction, record the year in which the first phase was completed and the tunnel was able to carry traffic.	Provide a best estimate when the year built is unknown; do not assign a default value. This date reflects the date when construction was completed, regardless of when the bridge was open to traffic. Rehabilitation of a structure does not change the year built.

Examples

Year Built	Code
1956	1956
2012	2012

Year Rehabilitated

Format			Item ID
N (4,0)			A.2

Specification	Commentary
Record the year that the most recent rehabilitation of the structure was completed. Record 0 if the tunnel has not been rehabilitated. For a tunnel to be defined as rehabilitated, the type of work performed, whether or not it meets current minimum standards, must have been eligible for funding under any of the Federal-aid funding categories. The eligibility criteria would apply to the work performed regardless of funding source.	Some types of eligible work not to be considered as rehabilitation are: - Safety feature replacement or upgrading (for example, tunnel rail, approach guardrail or impact attenuators). - Painting of structural steel. - Overlay of tunnel deck as part of a larger highway surfacing project (for example, overlay carried across tunnel invert for surface uniformity without additional tunnel work). - Utility work. - Emergency repair to restore structural integrity to the previous condition following an accident. - Retrofitting to correct a deficiency which does not substantially alter physical geometry or increase the load carrying capacity. - Work performed to keep a tunnel operational while plans for complete rehabilitation are under preparation (for example, adding a temporary support).

Examples

Year Rehabilitated	Code
1985	1985
Never rehabilitated	0

Total Number of Lanes

Format			Item ID
N (2,0)			A.3

Specification	Commentary
Record the number of highway traffic lanes being carried through the tunnel.	Include all lanes that are striped or otherwise operated as full width highway traffic lanes and run the entire length of the tunnel (e.g. merge lanes, ramp lanes, and left-turn lanes). Do not include pedestrian sidewalks, bike paths, or rail lines.

Examples

Total Number of Lanes	Code
Two lanes inbound, two lands outbound	4
One land inbound, two lanes outbound	3

Annual Average Daily Traffic

Format			Item ID
N (6,0)			A.4

Specification	Commentary
Record the annual average daily traffic (AADT) for the inventory route identified in Item ID I.7 - Route Number from the most recent count. Record the design AADT for newly inventoried tunnels when actual AADT information is not yet available. Maintain the last open AADT for tunnels that are temporarily closed until repair or replacement can be performed.	The AADT should be updated at intervals in accordance with the standards for the HPMS and standards/policies within the State. For two-way facilities, provide the bidirectional AADT; for one-way facilities, provide the directional AADT. All traffic, including trucks, is counted in AADT. The count of trucks should be used in Item ID A.5 – Average Daily Truck Traffic. When HPMS or other planning data is not available, use a test estimate based on site familiarity with State standards and policies.

Examples

Average Daily Traffic	Code
15,600	15600
24,000	24000

Annual Average Daily Truck Traffic

Format			Item ID
N (6,0)			A.5

Specification	Commentary
Record a 6-digit number that shows the most recent annual average daily truck traffic (AADTT) count available for the inventory route identified in Item ID I.7 - Route Number. If the tunnel is closed, code the actual AADTT from before the closure occurred.	For two-way facilities, provide the bidirectional AADTT; for one-way facilities, provide the directional AADTT. The AADTT should be updated at intervals in accordance with the standards for the HPMS and standards/policies within the State. When HPMS or other planning data is not available, use a best estimate based on site familiarity or route functional classification in accordance with State standards and policies. Do not include vans, pickup trucks and other light delivery trucks in AADTT. AADTT represent vehicle classes 4-13 as described in FHWA's Traffic Monitoring Guide electronically available at: http://www.fhwa.dot.gov/policyinformation/tmguide/.

Examples

Average Daily Truck Traffic	Code
1100	1100
2900	2900

Year of Annual Average Daily Traffic			
Format N (4,0)			Item ID A.6
Specification		Commentary	
Record the year associated with the data recorded in the AADT in Item ID A.4 – Annual Average Daily Traffic.		The traffic data should be updated at intervals of approximately 5 years or in accordance with the standards for the HPMS and standards/policies within the State.	
Examples			

Year of Average Daily Traffic	Code
1999	1999

Detour Length

Format			Item ID
N (3,0)			A.7

Specification	Commentary
Record the length to the nearest mile of the detour length. The detour length should represent the total additional travel for a vehicle which would result from closing of the tunnel. Record 999 where a detour does not exist.	If multiple bores exist, and following an accident, one of the bores can be used to detour traffic code as 1. If an accident would result in the closure of all bores for an extended period of time, then code the detour length for the additional travel length. The factor to consider when determining if a bypass is available at the site is the potential for moving vehicles, including military vehicles, around the tunnel.

Examples

Detour Length	Code
121 miles	121
Multiple bore tunnel	1

Figure 2.3.1 - Example of Multiple Bore Tunnel

Service in Tunnel

Format			Item ID
N (1,0)			A.8

Specification

Record the type of service in the tunnel using a 1-digit code.

The types of service in the tunnel and shall be coded using one of the following codes:

Code	Description
1	Highway
2	Highway and Railroad
3	Highway and Pedestrian
4	Highway, Railroad and Pedestrian
5	Other

Commentary

Railroad types include freight, light rail, commuter rail, high-speed, electrified, and transit.

Use code 3 for bicycles and other non-highway modes of human transportation not covered in other codes (e.g., golf carts).

Examples

Service in Tunnel	Code
Highway	1
Highway/railroad	2

2.4—Classification Items

The items in this section define the owner, operator and highway classification of the tunnel.

Item ID

C.1 Owner
C.2 Operator
C.3 Direction of Traffic
C.4 Toll
C.5 NHS Designation
C.6 STRAHNET Designation
C.7 Functional Classification
C.8 Urban Code

Owner

Format			Item ID
N (2,0)			C.1

Specification	Commentary
Record the agency that has ownership of the tunnel using one of the codes in the table below.	Use the hierarchy of State, Federal, county, city, railroad, and other private entity owners of a tunnel.

Code	Description
01	State Highway Agency
02	County Highway Agency
03	Town or Township Highway Agency
04	City or Municipal Highway Agency
11	State Park, Forest, or Reservation Agency
12	Local Park, Forest, or Reservation Agency
21	Other State Agencies
25	Other Local Agencies
26	Private (other than railroad)
27	Railroad
31	State Toll Authority
32	Local Toll Authority
57	General Services Administration (GSA)
58	Smithsonian – National Zoo
59	National Security Agency (NSA)
60	Other Federal Agencies (not listed)
61	Indian Tribal Government
62	Bureau of Indian Affairs (BIA)
63	Bureau of Fish and Wildlife (FWS)
64	U.S. Forest Service (USFS)
66	National Park Service (NPS)
67	Tennessee Valley Authority (TVA)
68	Bureau of Land Management (BLM)
69	Bureau of Reclamation (USBR)

Specification	Commentary
Table cont.	Use the hierarchy of State, Federal, county, city, railroad, and other private entity owners of a tunnel.

Code	Description
70	U.S. Army Corps of Engineers
72	Air Force
73	Navy/Marines
74	Army
75	National Aeronautics and Space Administration (NASA)
76	Metropolitan Washington Airports Service
77	Pentagon
78	Agriculture Research Service (ARS)
79	Department of Energy (DOE)
80	Unknown

Examples

Owner	Code
CALTRANS	1
PennDOT and City of Pittsburgh each own 50%	1

Operator			
Format N (2,0)			Item ID C.2
Specification		Commentary	
Record the agency that has maintenance responsibility for the tunnel using the codes from Item ID C.1- Owner to represent the type of agency that has primary responsibility for maintaining the structure.		Use the hierarchy of State, Federal, county, city, railroad, and other private entity for multiple operators of a tunnel.	

Direction of Traffic

Format			Item ID
N (1,0)			C.3

Specification	Commentary
Record the direction of traffic of the inventory route identified in Item ID I.7 – Route Number that represents the traffic pattern using one of the following codes:	Code 3, Variable traffic is intended to cover those tunnels in which the direction of traffic can be changed. One lane 2-way traffic occurs when 2 lanes approach a narrow unstriped tunnel requiring vehicles to alternate turns through the tunnel. When coding a tunnel with multiple bores, if traffic moves in both directions regardless of the individual traffic direction of a single bore, code as 2-way traffic.

Code	Description
0	Highway traffic not carried
1	1-way traffic
2	2-way traffic
3	Variable traffic
4	One lane 2-way traffic

Toll

Format			Item ID
N (1,0)			C.4

Specification	Commentary
Record the toll status of the tunnel for the inventory route identified in Item ID I.7 – Route Number using one of the following codes: Code — Description 0 — No tolls 1 — Toll tunnel 2 — On toll route	Use code 0 when the tunnel is toll-free and carries a toll-free highway Use code 1 when tolls are paid specifically to use the tunnel. Use code 2 when tolls are paid to use the facility including both the highway and tunnel.

NHS Designation

Format			Item ID
N (1,0)			C.5

Specification

Record whether the inventory route is on the National Highway System (NHS) or not on that system for the inventory route identified in Item ID I.7 – Route Number using one of the following codes:

Code	Description
0	Route is not on the NHS
1	Route is on the NHS

Commentary

The National Highway System (NHS) includes the Interstate Highway System as well as other roads important to the nation's economy, defense, and mobility. The NHS was developed by the Department of Transportation (DOT) in cooperation with states, local officials, and metropolitan planning organization (MPOs).

NHS routes and connectors are identified in the HPMS.

State maps of the NHS can be found at: https://www.fhwa.dot.gov/planning/national_highway_system/nhs_maps/.

STRAHNET Designation

Format			Item ID
N (1,0)			C.6

Specification	Commentary
Record the Strategic Highway Network (STRAHNET) designation of the inventory route identified in Item ID I.7 – Route Number using one of the following codes: Code: 0 – Inventory Route is not a STRAHNET route Code: 1 – Inventory Route is a STRAHNET route	The STRAHNET is a system of Interstate and primary highways and connectors that provide access to major US military installations and strategic ports, and provides continuity and emergency capabilities for defense purposes. The STRAHNET is determined by the Surface Deployment and Distribution Command (SDDC) in coordination with the FHWA. STRAHNET routes can be found at: https://www.fhwa.dot.gov/planning/national_highway_system/nhs_maps/. For the purposes of this item, the STRAHNET Connectors are considered included in the term STRAHNET.

Functional Classification

Format			Item ID
N (1,0)			C.7

Specification

Record the functional classification of the inventory route identified in Item ID I.7 – Inventory Route one of the following codes:

Code	Description
1	Interstate
2	Principal Arterial – Other Freeways and Expressways
3	Principal Arterial - Other
4	Minor Arterial
5	Major Collector
6	Minor Collector
7	Local

Commentary

Functional classifications result from the grouping of highways by the character of service they provide.

Ensure that the functional classification designated in this item is consistent with the HPMS.

FHWA Functional Classification Guidelines: http://www.fhwa.dot.gov/planning/processes/statewide/related/functional_classification/index.cfm.

Urban Code			
Format N (5,0)			Item ID C.8
Specification		Commentary	
Records the urbanized area code consistent with the State's HPMS urban boundaries.		Urban codes can be found in Appendix I of the 2010 HPMS Field Manual at: http://www.fhwa.dot.gov/policyinformation/hpms/fieldmanual/appendixi.cfm. For tunnels outside urbanized areas, Appendix I in the HPMS Field Manual indicates that code 99999 is used for rural areas with population less than 5,000 and code 99998 for small urban areas with population 5,000 – 49,000. State maps of the urban boundaries with roadways (map layers: Labels, Transportation and Urban Areas checked) can be found at http://tigerweb.geo.census.gov/TIGERweb2010/.	

2.5—Geometric Data Items

The items in this section define the geometric data of the tunnel.

Item ID

G.1 Tunnel Length
G.2 Minimum Vertical Clearance over Tunnel Roadway
G.3 Roadway Width, Curb-to-Curb
G.4 Left Sidewalk Width
G.5 Right Sidewalk Width

Tunnel Length

Format			Item ID
N (6,0)			G.1

Specification	Commentary
Record the length of the tunnel to the nearest foot. The length shall be measured along the centerline of the roadway.	When a tunnel is divided into segments, record the length of the segment. For example: if a 1000 foot tunnel is divided into 4-250 foot segments, each segment will have a Tunnel Length of 250 feet. When multiple bores are reported as a single tunnel, record the length of the longest bore.

Examples

Tunnel Length	Code
860.4 feet	860
2,400 feet	2400

Minimum Vertical Clearance over Tunnel Roadway			
Format N (5,1)			Item ID G.2

Specification	Commentary
Record the minimum vertical clearance between the mainline tunnel roadway surface and any overhead restriction, i.e. tunnel ceiling, overhead signs, lighting, etc.	The roadway surface includes any surface on which a vehicle can travel, including shoulders. Ramps should be excluded when included as part of a tunnel system. The intent is to determine the restrictions of the primary route of the tunnel. Vertical clearance, as shown in figure 2.6.1 below, represents the Minimum Vertical Clearance over Tunnel Roadway.

Examples

Minimum Vertical Clearance Over Tunnel Roadway	Code
16.54 feet	16.5
20.00 feet	20.0

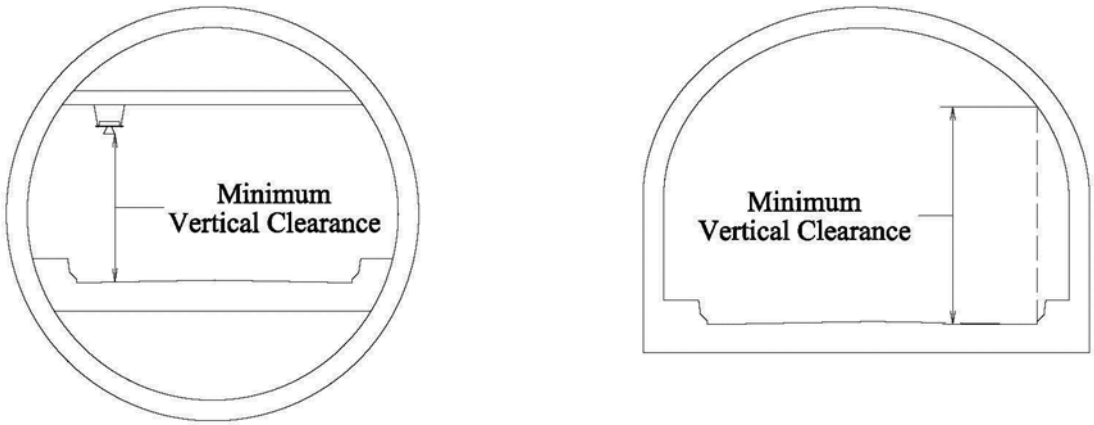

Figure 2.6.1 - Drawing of Minimum Vertical Clearance

Roadway Width, Curb-to-Curb			
Format N (4,1)			Item ID G.3
Specification		Commentary	
Record the most restrictive minimum distance between curbs or rails on the mainline tunnel roadway.		Ramps should be excluded when included as part of a tunnel system. The intent is to determine the restrictions of the primary route of the tunnel. Raised or non-mountable medians, and barrier widths are to be excluded from the summation.	
Examples			

Roadway Width, Curb-to-Curb	Code
24.00 feet	24.0
30.43 feet	30.4

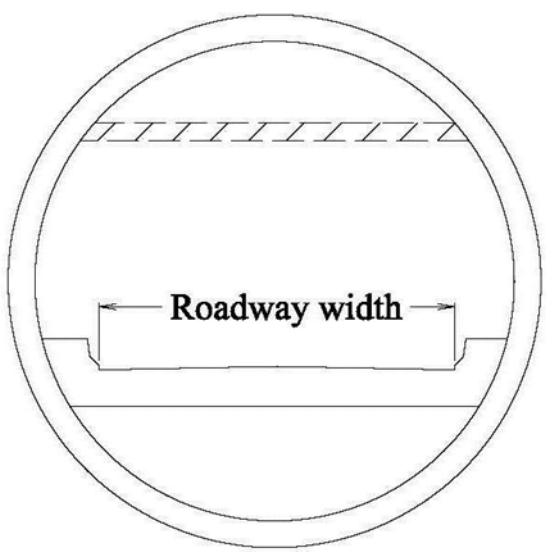

Figure 2.6.2 – Drawing of Width

Left Sidewalk Width			
Format N (3,1)			Item ID G.4
Specification		Commentary	
Record the minimum width of the left sidewalk to the nearest tenth of a foot from the face of tunnel liner to the face of curb. Measure the width perpendicular to the centerline of the roadway. Record 0 when the face of curb does not extend beyond the face of tunnel liner.		Left and right are determined on the basis of the inventoried route carried by the tunnel, commonly west to east or south to north.	

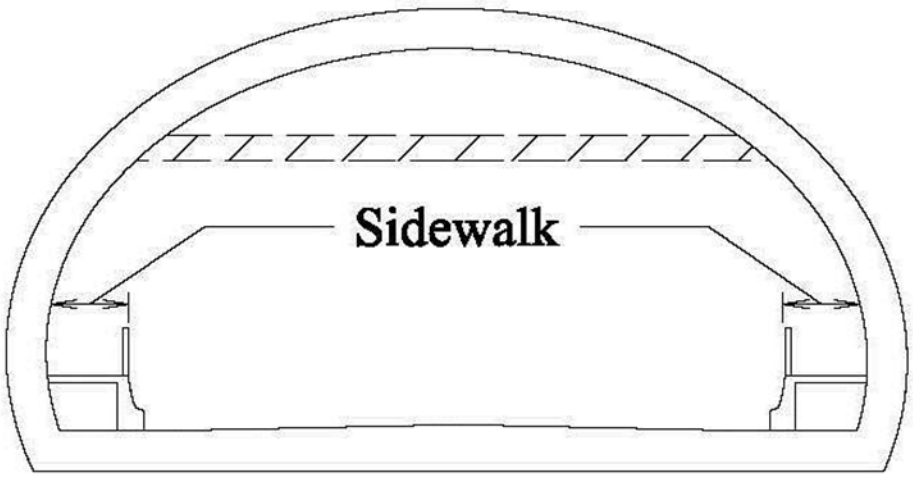

Figure 2.6.3 - Drawing of Sidewalk Width

Right Sidewalk Width			
Format N (3,1)			Item ID G.5
Specification		Commentary	
Record the minimum width of the right sidewalk to the nearest tenth of a foot from the face of tunnel liner to the face of curb. Measure the width perpendicular to the centerline of the roadway. Record 0 when the face of curb does not extend beyond the face of tunnel liner.		Left and right are determined on the basis of the inventoried route carried by the tunnel, commonly west to east or south to north.	

2.6—Inspection Items

The items in this section describe when inspections were performed and the type of inspections performed.

Item ID

D.1 Routine Inspection Target Date
D.2 Actual Routine Inspection Date
D.3 Routine Inspection Interval
D.4 In-Depth Inspection
D.5 Damage Inspection
D.6 Special Inspection

Routine Inspection Target Date

Format			Item ID
D			D.1

Specification	Commentary
Record the routine inspection target date as a month and year. Code an 8-digit number to represent the month, day and year. The number of the month should be coded in the first 2 digits with a leading zero as required, the number of the day should be coded in the third and fourth digits with a leading zero as required and the year coded as the fifth thru eight digits.	Initially, the target date is set by the program manager and should not be modified without prior notification to the FHWA Division Office. This date is intended to provide the baseline for scheduling future routine inspections. The month associated with Item D.2 - Actual Routine Inspection Date should be within 2 months (+/-) of this target month. The year represents the date in which the target date was set.

Examples

Routine Inspection Target Date	Code
November 5, 1999	11051999
August 21, 2012	08212012

Actual Routine Inspection Date

Format			Item ID
D			D.2

Specification	Commentary
Record the month and year that the actual routine inspection of the tunnel was performed. Code an 8-digit number to represent the month, day and year. The number of the month should be coded in the first 2 digits with a leading zero as required, the number of the day should be coded in the third and fourth digits with a leading zero as required and the year coded as the fifth thru eight digits.	This date should indicate when the routine inspection began.

Examples

Actual Routine Inspection Date	Code
November 5, 2009	11052009
August 21, 2012	08212012

Routine Inspection Interval

Format			Item ID
N (2,0)			D.3

Specification	Commentary
Record the number of months between designated routine inspections.	The designated inspection interval could vary from inspection to inspection depending on the condition of the tunnel at the time of inspection and the procedures established by the individual in-charge of the inspection program.

Examples

Routine Inspection Interval	Code
Every 6 months	6
Every 24 months	24

In-Depth Inspection

Format			Item ID
N (1,0)			D.4

Specification	Commentary
Record this item for all records in the inventory. For the tunnel identified in Item ID I.1 – Tunnel Number, record whether the tunnel has an In-Depth Inspection scheduled. Use one of the following codes:	A close-up inspection of one, several, or all tunnel structural elements or functional systems to identify any deficiencies not readily detectable using routine inspection procedures; hands-on inspection may be necessary at some locations. In-depth inspections may occur more or less frequently than routine inspections, as outlined in the tunnel-specific inspection procedures.

Code	Description
0	In-Depth Inspection has not been scheduled
1	In-Depth Inspection has been scheduled

Damage Inspection

Format			Item ID
N (1,0)			D.5

Specification

Record this item for all records in the inventory. For the tunnel identified in Item ID I.1 – Tunnel Number, record whether the tunnel has a Damage Inspection performed. This should be coded as 1 if a damage inspection has been performed since the previous routine inspection (Item ID D.2 – Actual Routine Inspection Date).

Use one of the following codes:

Code	Description
0	Damage Inspection has not been performed
1	Damage Inspection has been performed

Commentary

This is an unscheduled inspection to assess structural damage resulting from environmental factors or human actions.

This item should be coded “1” if a damage inspection has occurred during the current routine inspection interval. Assuming no further damage inspections has occurred, this item should return a “0” code in subsequent routine inspection cycles.

Special Inspection

Format			Item ID
N (1,0)			D.6

Specification	Commentary
Record this item for all records in the inventory. For the tunnel identified in Item ID I.1 – Tunnel Number, record whether the tunnel has a Special Inspection scheduled. Use one of the following codes:	An inspection, scheduled at the discretion of the tunnel owner, used to monitor a particular known or suspected deficiency.

Code	Description
0	Special Inspection has not been scheduled
1	Special Inspection has been scheduled

2.7—Load Rating and Posting Items

The items in this section are related to load rating and posting of the highway tunnel.

Item ID

L.1 Load Rating Method
L.2 Inventory Load Rating Factor
L.3 Operating Load Rating Factor
L.4 Tunnel Load Posting Status
L.5 Posting Load – Gross
L.6 Posting Load – Axle
L.7 Posting Load – Type 3
L.8 Posting Load – Type 3S2
L.9 Posting Load – Type 3-3
L.10 Height Restriction
L.11 Hazardous Material Restriction
L.12 Other Restrictions

Load Rating Method

Format			Item ID
AN1			L.1

Specification

Record the method used to determine the Load Rating of the tunnel using one of the following codes:

Code	Description
0	Field evaluation and documented engineering judgment
1	Load Factor (LF)
2	Allowable Stress (AS)
3	Load and Resistance Factor (LRFR)
4	Load Testing
5	No rating analysis or evaluation performed
A	Assigned rating
N	Load rating is not required

Commentary

Use code 0 when the load rating is determined by field evaluation and documented engineering judgment, typically done when plans are not available or in cases of severe deterioration.

Use code 5 when the tunnel has not been load rated or load rating documentation does not exist.

Use code N when the tunnel does not require a load rating. At-grade roadways in tunnels are exempt from load rating.

Inventory Load Rating Factor			
Format N (4,2)			Item ID L.2
Specification		Commentary	
Record the inventory load rating factor, truncated to the hundredth, for the standard AASHTO HS-20 or HL-93 loadings. Leave this item blank for tunnels not requiring a load rating (ID L.2 - Load Rating Method coded as N)		For LRFR, this is the rating factor for the design load rating at the inventory level of reliability using the HL-93 load considering all applicable strength and serviceability limit states. Refer to the AASHTO Manual for Bridge Evaluation for details of HS-20 and HL-93 loadings.	

Operating Load Rating Factor			
Format N (4,2)			Item ID L.3
Specification		Commentary	
Record the operating load rating factor, truncated to the hundredth, for the standard AASHTO HS-20 or HL-93 loadings. Leave this item blank for tunnels not requiring a load rating (ID L.2 - Load Rating Method coded as N)		For LRFR, this is the rating factor for the design load rating at the operating level of reliability using the HL-93 load considering all applicable strength and serviceability limit states. Refer to the AASHTO Manual for Bridge Evaluation for details of HS-20 and HL-93 loadings.	

Tunnel Load Posting Status

Format			Item ID
AN1			L.4

Specification	Commentary
Record the load posting status of the tunnel using one of the following codes:	

Code	Description
A	No restriction
B	Posting or posting reduction recommended, but not implemented
D	Would be posted or closed, but temporary shoring or similar allows for unrestricted traffic
E	Temporary structure in place to carry legal loads while tunnel is closed and awaiting replacement or rehabilitation
G	New tunnel not opened to traffic
K	Tunnel closed to all traffic
P	Posted with weight limit sign(s)
R	Posted with other load restriction sign(s)

Posting Load – Gross			
Format N (2,0)			Item ID L.5
Specification		Commentary	
Record the gross weight limit shown on the load posting sign rounded down to the nearest U.S. ton. Leave this item blank if a gross load posting sign is not used.			
Examples			

Posting Load - Gross	Code
R12-1	10
R12-4	10
R12-3	3

Figure 2.7.1 – MUTCD Weight Limit Signs - R12-1, R12-4, and R12-3

Posting Load – Axle			
Format N (2,0)			Item ID L.6
Specification		Commentary	
Record the axle weight limit shown on the load posting sign rounded down to the nearest U.S. ton. Leave this item blank if an axle load posting sign is not used.		This item can also be used for tandem axle load posting signs. The tandem axle weight can be recorded for this item when it is the lowest controlling axle weight limit.	
Examples			

Posting Load - Axle	Code
R12-2	5
R12-4	2

Figure 2.7.2 – MUTCD Weight Limit Signs - R12-2 and R12-4

Posting Load – Type 3			
Format N (2,0)			Item ID L.7
Specification		Commentary	
Record the weight limit value shown on the load posting sign for the AASHTO Type 3 vehicle or State equivalent rounded down to the nearest U.S. ton. Leave this item blank if no posting sign is used for this vehicle type.		A State equivalent vehicle is considered to have the same number of axles and similar axle spacing as the AASHTO Type 3 vehicle. Refer to the AASHTO Manual for Bridge Evaluation for legal load posting vehicle configurations.	
Examples			

Posting Load – Type 3	Code
R12-5	8

Figured 2.7.3 – MUTCD Weight Limit Signs – R12-5

Posting Load – Type 3S2			
Format N (2,0)			Item ID L.8
Specification		Commentary	
Record the weight limit value shown on the load posting sign for the AASHTO Type 3S2 vehicle or State equivalent rounded down to the nearest U.S. ton. Leave this item blank if no posting sign is used for this vehicle type.		A State equivalent vehicle is considered to have the same number of axles and similar axle spacing as the AASHTO Type 3S2 vehicle. Refer to the AASHTO Manual for Bridge Evaluation for legal load posting vehicle configurations.	
Examples			

Posting Load – Type 3	Code
R12-5	12

Figured 2.7.4 – MUTCD Weight Limit Signs – R12-5

Posting Load – Type 3-3			
Format N (2,0)			Item ID L.9
Specification		Commentary	
Record the weight limit value shown on the load posting sign for the AASHTO Type 3-3 vehicle or State equivalent rounded down to the nearest U.S. ton. Leave this item blank if no posting sign is used for this vehicle type.		A State equivalent vehicle is considered to have the same number of axles and similar axle spacing as the AASHTO Type 3-3 vehicle. Refer to the AASHTO Manual for Bridge Evaluation for legal load posting vehicle configurations.	
Examples			

Posting Load – Type 3	Code
R12-5	16

Figured 2.7.4 – MUTCD Weight Limit Signs – R12-5

Height Restriction

Format			Item ID
N (1,0)			L.10

Specification	Commentary
Record whether the tunnel has a height restriction using one of the following codes:	

Code	Description
1	Yes
0	No

Hazardous Material Restriction

Format			Item ID
N (1,0)			L.11

Specification	Commentary
Record whether the tunnel has a hazardous material restriction using one of the following codes:	

Code	Description
1	Yes
0	No

Other Restrictions

Format			Item ID
N (1,0)			L.12

Specification	Commentary
Record whether the tunnel has a restriction other than load posting, height or hazardous material using one of the following codes:	Other restrictions could include width restrictions or requirements for police escorts for permit vehicles.

Code	Description
1	Yes
0	No

2.8—Navigation Items

The items in this section are related to navigable waterways over the tunnel.

Item ID

N.1 Under Navigable Waterway

N.2 Navigable Waterway Clearance

N.3 Tunnel or Portal Island Protection from Navigation

Under Navigable Waterway

Format			Item ID
N (1,0)			N.1

Specification	Commentary
Record the one digit number to describe if the waterway above the tunnel is navigable. Some tunnels are located under navigable waterways. If there is a navigable waterway above the tunnel, this item shall be coded 1. If there is not a navigable waterway above the tunnel, this item shall be coded 0. Use one of the following codes:	

Code	Description
0	A navigable waterway is not above the tunnel
1	A navigable waterway is above the tunnel

Navigable Waterway Clearance

Format			Item ID
N (3,1)			N.2

Specification	Commentary
Record the minimum vertical clearance imposed at the site as measured above a datum that is specified on a navigation permit issued by a control agency (between top of tunnel or tunnel protection system and mean low water level). This measurement will show the clearance that is allowable for navigational purposes. If the tunnel is not under a navigable waterway, code as 00.0.	

Examples

Navigable Waterway Clearance	Code
50.00 feet	50.0
60.63 feet	60.6
No waterway over tunnel	00.0

Tunnel or Portal Island Protection from Navigation

Format			Item ID
N (1,0)			N.3

Specification	Commentary
Record the codes below to indicate the presence and adequacy of top of tunnel protection and portal islands to protect against vessel collision. Use one of the following codes:	

Code	Description
0	Navigation protection not required or not under navigable waterway
1	In place and functioning
2	In place but in a deteriorated condition
3	In place but reevaluation of design suggested
4	None present but reevaluation suggested

2.9—Structure Type and Material Items

The items in this section are related to the tunnel shape and the adjacent materials surrounding the tunnel.

Item ID

S.1 Number of Bores

S.2 Tunnel Shape

S.3 Portal Shapes

S.4 Ground Conditions

S.5 Complex

Number of Bores			
Format N (1,0)			Item ID S.1
Specification		Commentary	
Record the one digit number defining the number of bores in a tunnel. When recording and coding for this item, use the number of bores associated with Item ID I.1 – Tunnel Number.		Definition of a Tunnel Bore - an underground passageway for vehicles that pass under a mountain, waterway, or an urban area. A ramp should not be counted as a bore unless it is being coded as a separate tunnel.	

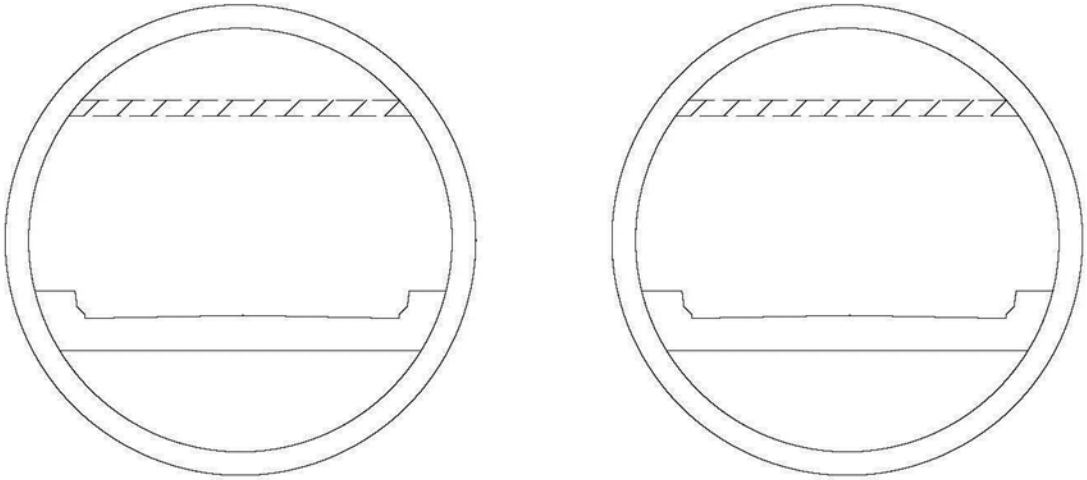

Two Bores

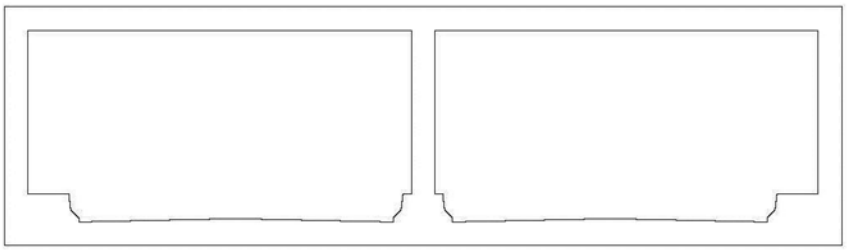

One Bore

Figure 2.9.1 Number of Bores

Tunnel Shape			
Format N (1,0)			Item ID S.2
Specification		Commentary	

Record the type of tunnel shape.

Use one of the following codes:

Code	Description
1	Oval
2	Horseshoe
3	Rectangular
4	Circular

See figure 2.9.2 below.

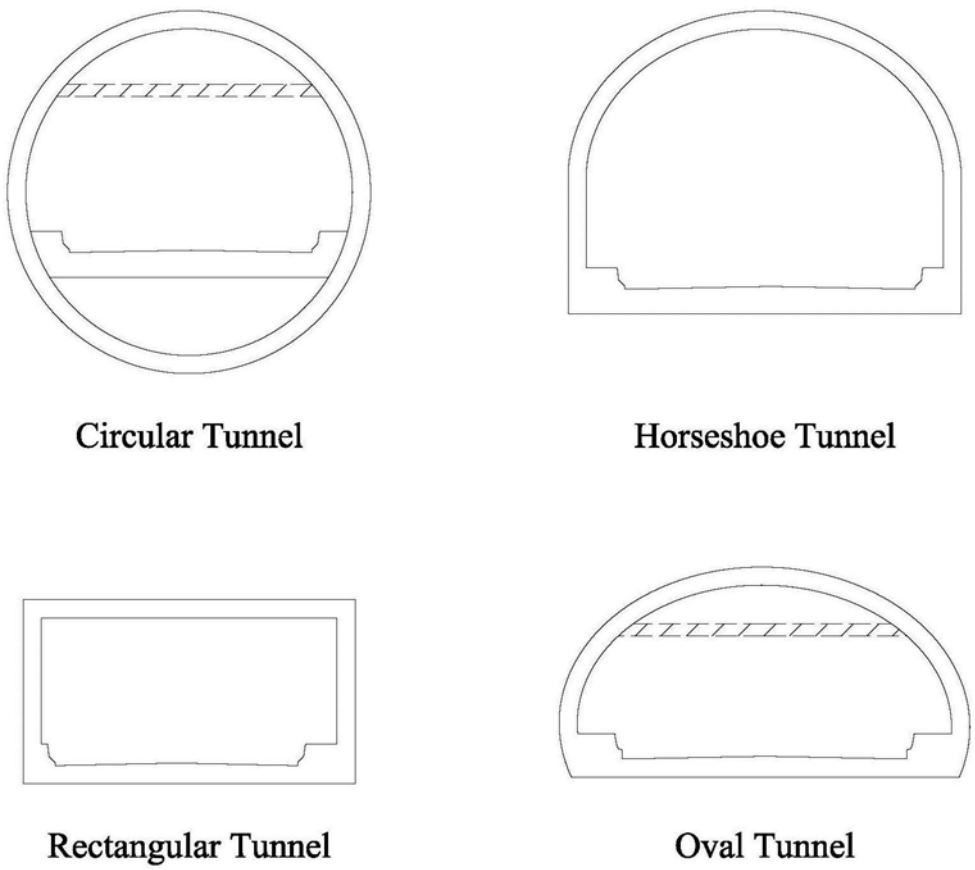

Figure 2.9.2 – Tunnel Shapes

Portal Shape

Format			Item ID
N (1,0)			S.3

Specification	Commentary
Record the type of portal shape. Use one of the following codes:	See example shapes shown for Item ID S.2 - Tunnel Shape, figure 2.9.2.

Code	Description
1	Oval
2	Horseshoe
3	Rectangular
4	Circular
5	Other

Ground Conditions

Format			Item ID
N (1,0)			S.4

Specification	Commentary
Record the type of ground conditions. Use one of the following codes:	Definitions: Soil is used to define ground conditions consisting primarily of clay, silt, sand, gravel or a mixture. Rock is used to define ground conditions consisting primarily of material that has rock structure in weathered to sound condition. The term mixed face usually refers to a situation where the soil conditions vary along the length and/or height of the tunnel.

Code	Description
1	Soil
2	Rock
3	Mixed Face

Complex

Format			Item ID
N (1,0)			S.5

Specification	Commentary
Record whether the tunnel is complex using one of the following codes: Code: 0 — The tunnel is not complex Code: 1 — The tunnel is complex	A complex tunnel is characterized by advanced or unique structural elements or functional systems. Complex tunnels may include mechanical or fire suppression equipment to ventilate exhaust from the tunnel or provide protection against tunnel fires. A non-complex tunnel in contrast is typically of a shorter length, not requiring any ventilation, and may or may not have lighting installed.

(THIS PAGE INTENTIONALLY LEFT BLANK)

Section 3: Elements

3.1—Introduction

This section is comprised of tunnel elements arranged by general element type, material, and in accordance to their physical location in the tunnel to facilitate ease of use by tunnel inspectors in the field.

Element Name	
Unit of Measure XXXXX	Element Number XXXX
Specification	Commentary
Description of the element and how to measure the element Record the element number, total element quantity and element quantity assigned to each condition state. If this element does not exist for a tunnel, then do not code this element. For element condition states, refer to the table below.	Additional information about the element to supplement the specification portion

Condition State Definitions

Defect	Condition State 1	Condition State 2	Condition State 3	Condition State 4
General Condition	Good condition – no notable distress	Fair condition- isolated breakdowns or deterioration.	Poor condition – widespread deterioration or breakdowns without reducing load capacity.	Severe condition - The condition warrants a structural review to determine the effect on strength or serviceability of the element or tunnel, OR a structural review has been completed and the defects impact strength and serviceability of the element or tunnel.

The format of an element is described in the two tables. The first table details what an element is in 5 parts: (1) Element Name, (2) Unit of Measure, (3) Element Number, (4) Specification and (5) Commentary. The second table details the condition state definitions which include the defects that apply to a particular element and the condition state language for each of those defects.

The Element Name is the name used to describe that particular element.

The Unit of Measure details the units to quantify that element. The Unit of Measure will be length, area or each. Length should be reported in feet. Area should be reported in square feet.

The Element Number is the unique number assigned to represent that element. Element numbers were derived based on their section, subsection and element.

The Specification and Commentary sections provide the detailed description of each element, how to calculate the quantity of the element and some explanation or additional clarification to consider for coding each element.

In addition to the elements defined herein, a State, Federal agency, or tribal government may define sub-elements that are consistent with these Specifications, which can provide additional information for its internal asset management needs. An example would be developing a sub-element for fan motors which can impact the effectiveness of the ventilation system. Alternatively, a State, Federal agency, or tribal government can develop agency defined elements, which are not linked to an element defined within these Specifications so as to avoid confusion or inconsistency.

The Condition State Definition table lists defects and condition state language that is specific to that element. Only those defects which are appropriate for a specific element are listed. Each defect is then associated with four condition states and descriptive language based on the material type. This is done to recognize that the defect is dependent on the material and its severity. For instance cracking can occur in steel, concrete and timber, but the type of cracking will differ and the element condition state language reflects these differences. The severity of a defect can vary within an element, and is described and quantified using four different condition states.

- Condition State 1 is analogous to in good condition;
- Condition State 2 is analogous to in fair condition;
- Condition State 3 is analogous to in poor condition; and
- Condition State 4 is analogous to in severe condition.

The limits of Conditions States 1 through 3 are typically well defined for each defect. Condition State 4 is reserved for instances when the defect's conditions are beyond the limits of those defined in Conditions State 1 through 3 and a structural review is recommended or has been performed and reduced strength or serviceability exists.

For an element, the total quantity is divided among the 4 condition states based on the condition state descriptions.

Example 1: Element Measured by Length

If a 10 ft long concrete girder were to be divided into 10 1-foot sections, each section would be assigned a condition state based on the defects present. If one 1-foot section had a crack .006 in. wide, that 1-foot section would be in condition state 2. If the remaining nine 1-foot sections had no problems, they would be in condition state 1. The result would be a total quantity of 10 ft, with 9 ft in condition state 1 and 1 ft in condition state 2.

Example 2: Element Measured by Each

If a tunnel has a steel hanger with two anchorages and the hanger has no noted problems, but one anchorage has cracking around it but the concrete is sound while the other shows no signs of distress. Because the hanger and anchorage is coded as each, the hanger and its two anchorages would determine the condition state for the single unit. In this case, the hanger would be in condition state 1, the one anchorage would also be in condition state 1 and the anchorage with cracking around it would be in condition state 2. For this unit of hanger and anchorages, the condition state would be reported as condition state 2.

3.2—Structural Section

This section defines tunnel structural elements and the methodology for determining total element quantities and condition state quantities. The following elements are included.

Element Type	Element #	Element Name	Unit of Measure
Liners	10000	Steel Tunnel Liner	area, ft^2
	10001	Cast-in-Place Concrete Tunnel Liner	area, ft^2
	10002	Precast Concrete Tunnel Liner	area, ft^2
	10003	Shotcrete Tunnel Liner	area, ft^2
	10004	Timber Tunnel Liner	area, ft^2
	10005	Masonry Tunnel Liner	area, ft^2
	10006	Unlined Rock Tunnel	area, ft^2
	10007	Rock Bolt/Dowel	Each
	10009	Other Tunnel Liner	area, ft^2
Tunnel Roof Girders	10010	Steel Tunnel Roof Girders	length, ft
	10011	Concrete Tunnel Roof Girders	length, ft
	10012	Prestressed Concrete Tunnel Roof Girders	length, ft
	10019	Other Tunnel Roof Girders	length, ft
Columns/ Piles	10020	Steel Columns/Piles	each
	10021	Concrete Columns/Piles	each
	10029	Other Columns/Piles	each
Cross Passageway	10030	Steel Cross Passageway	length, ft
	10031	Concrete Cross Passageway	length, ft
	10033	Shotcrete Cross Passageway	length, ft
	10034	Timber Cross Passageway	length, ft
	10035	Masonry Cross Passageway	length, ft
	10036	Unlined Rock Cross Passageway	length, ft
	10039	Other Cross Passageway	length, ft
Interior Walls	10041	Concrete Interior Walls	area, ft^2
	10049	Other Interior Walls	area, ft^2
Portal	10051	Concrete Portal	area, ft^2
	10055	Masonry Portal	area, ft^2
	10059	Other Portal	area, ft^2
Ceiling Slab	10061	Concrete Ceiling Slab	area, ft^2
	10069	Other Ceiling Slab	area, ft^2

Element Type	Element #	Element Name	Unit of Measure
Ceiling Girder	10070	Steel Ceiling Girder	length, ft
	10071	Concrete Ceiling Girder	length, ft
	10072	Prestressed Concrete Ceiling Girder	length, ft
	10079	Other Ceiling Girder	length, ft
Hangers and Anchorages	10080	Steel Hangers and Anchorages	each
	10089	Other Hangers and Anchorages	each
Ceiling Panels	10090	Steel Ceiling Panels	area, ft^2
	10091	Concrete Ceiling Panels	area, ft^2
	10099	Other Ceiling Panels	area, ft^2
Invert Slab	10101	Concrete Invert Slab	area, ft^2
	10109	Other Invert Slab	area, ft^2
Slab-on-Grade	10111	Concrete Slab-on-Grade	area, ft^2
	10119	Other Slab-on-Grade	area, ft^2
Invert Girder	10120	Steel Invert Girder	length, ft
	10121	Concrete Invert Girder	length, ft
	10122	Prestressed Concrete Invert Girder	length, ft
	10129	Other Invert Girder	length, ft
Joints	10130	Strip Seal Expansion Joint	length, ft
	10131	Pourable Joint Seal	length, ft
	10132	Compression Joint Seal	length, ft
	10133	Assembly Joint With Seal	length, ft
	10134	Open Expansion Joint	length, ft
	10135	Assembly Joint Without Seal	length, ft
	10139	Other Joint	length, ft
Gaskets	10140	Gaskets	length, ft

Steel Tunnel Liner	
Unit of Measure Area (ft²)	Element Number 10000
Specification	Commentary
Record this element for all steel tunnel liners. Steel tunnel liners function as a shell for the exterior of the tunnel and as a divider between different bores of the tunnel. The area of a tunnel liner is the product of the length (along the centerline) of the tunnel and the perimeter of the liner.	Visual assessments may be supplemented with non-destructive or destructive testing results for all elements.

Condition State Definitions

Defect	Condition State 1	Condition State 2	Condition State 3	Condition State 4
Corrosion	None	Freckled rust. Corrosion of the steel has initiated.	Section loss is evident or pack rust is present but does not warrant structural review.	The condition warrants a structural review to determine the effect on strength or serviceability of the element or tunnel, OR a structural review has been completed and the defects impact strength and serviceability of the element or tunnel.
Cracking	None	Crack that has self-arrested or has been arrested with effective arrest holes, doubling plates, or similar.	Identified crack exists that is not arrested but does not warrant structural review.	
Connection	Connection is in place and functioning as intended.	Loose fasteners or pack rust without distortion is present but the connection is in place and functioning as intended.	Missing bolts, rivets or fasteners; broken welds; or pack rust with distortion but does not warrant a structural review.	
Distortion	None	Distortion has received structural review and has been mitigated.	Distortion has received structural review and does not require mitigation.	
Leakage	Dry surface	Saturated surface indicating seepage may be present or evidence of past seepage.	Fully saturated surface with seepage.	Seepage could range from dripping to flowing.

Cast-in-Place Concrete Tunnel Liner	
Unit of Measure Area (ft²)	Element Number 10001
Specification	Commentary
Record this element for all cast-in-place concrete tunnel liners. Cast-in place concrete tunnel liners function as a shell for the exterior of the tunnel and as a divider between different bores of the tunnel. The area of a tunnel liner is the product of the length (along the centerline) of the tunnel and the perimeter of the liner.	Visual assessments may be supplemented with non-destructive or destructive testing results for all elements.

Condition State Definitions

Defect	Condition State 1	Condition State 2	Condition State 3	Condition State 4
Delamination/ Spall/ Patched area	None	Delaminated. Spall 1 in. or less deep or 6 in. or less in diameter. Patched area that is sound.	Spall greater than 1 in. deep or greater than 6 in. diameter. Patched area that is unsound or showing distress. Does not warrant structural review.	The condition warrants a structural review to determine the effect on strength or serviceability of the element or tunnel, OR a structural review has been completed and the defects impact strength and serviceability of the element or tunnel.
Exposed Rebar	None	Present without measureable section loss.	Present with measureable section loss, but does not warrant structural review.	
Efflorescence/ Rust Staining	None	Surface white without build-up or leaching without rust staining.	Heavy build-up with rust staining.	
Cracking (Liners)	Width less than 0.012 in. or spacing greater than 5.0 ft.	Width 0.012 - 0.10 in. below spring line or spacing of 1.0 – 5.0 ft.	Width greater than 0.10 in. below spring line or greater than 0.012 in. above spring line or spacing of less than 1 ft.	
Distortion	None	Distortion has received structural review and has been mitigated.	Distortion has received structural review and does not require mitigation.	

Condition State Definitions Cont.

Defect	Condition State 1	Condition State 2	Condition State 3	Condition State 4
Leakage	Dry surface	Saturated surface indicating seepage may be present or evidence of past seepage.	Fully saturated surface with seepage.	Seepage could range from dripping to flowing.

Precast Concrete Tunnel Liner	
Unit of Measure Area (ft²)	Element Number 10002
Specification	Commentary
Record this element for all precast concrete tunnel liners. Precast concrete tunnel liners function as a shell for the exterior of the tunnel and as a divider between different bores of the tunnel. The area of a tunnel liner is the product of the length (along the centerline) of the tunnel and the perimeter of the liner.	Visual assessments may be supplemented with non-destructive or destructive testing results for all elements.

Condition State Definitions

Defect	Condition State 1	Condition State 2	Condition State 3	Condition State 4
Delamination/ Spall/ Patched area	None	Delaminated. Spall 1 in. or less deep or 6 in. or less diameter. Patched area that is sound.	Spall greater than 1 in. deep or greater than 6 in. diameter. Patched area that is unsound or showing distress. Does not warrant structural review.	The condition warrants a structural review to determine the effect on strength or serviceability of the element or tunnel, OR a structural review has been completed and the defects impact strength and serviceability of the element or tunnel.
Exposed Rebar	None	Present without measureable section loss.	Present with measureable section loss, but does not warrant structural review.	
Efflorescence/ Rust Staining	None	Surface white without build-up or leaching without rust staining.	Heavy build-up with rust staining.	
Cracking (Liners)	Width less than 0.012 in. or spacing greater than 5.0 ft.	Width 0.012 - 0.10 in. below spring line or spacing of 1.0 – 5.0 ft.	Width greater than 0.10 in. below spring line or greater than 0.012 in. above spring line or spacing of less than 1 ft.	
Distortion	None	Distortion has received structural review and has been mitigated.	Distortion has received structural review and does not require mitigation.	

Condition State Definitions Cont.

Defect	Condition State 1	Condition State 2	Condition State 3	Condition State 4
Leakage	Dry surface	Saturated surface indicating seepage may be present or evidence of past seepage.	Fully saturated surface with seepage.	Seepage could range from dripping to flowing.

Shotcrete Tunnel Liner	
Unit of Measure Area (ft²)	Element Number 10003
Specification	Commentary
Record this element for all shotcrete tunnel liners. Shotcrete tunnel liners function as a shell for the exterior of the tunnel and as a divider between different bores of the tunnel. The area of a tunnel liner is the product of the length (along the centerline) of the tunnel and the perimeter of the liner.	Visual assessments may be supplemented with non-destructive or destructive testing results for all elements.

Condition State Definitions

Defect	Condition State 1	Condition State 2	Condition State 3	Condition State 4
Delamination/ Spall/ Patched area	None	Delaminated. Spall 1 in. or less deep or 6 in. or less in diameter. Patched area that is sound.	Spall greater than 1 in. deep or greater than 6 in. diameter. Patched area that is unsound or showing distress. Does not warrant structural review.	The condition warrants a structural review to determine the effect on strength or serviceability of the element or tunnel, OR a structural review has been completed and the defects impact strength and serviceability of the element or tunnel.
Exposed Rebar	None	Present without measureable section loss.	Present with measureable section loss, but does not warrant structural review.	
Efflorescence/ Rust Staining	None	Surface white without build-up or leaching without rust staining.	Heavy build-up with rust staining.	
Cracking (Liners)	Width less than 0.012 in. or spacing greater than 5.0 ft.	Width 0.012 - 0.10 in. below spring line or spacing of 1.0 – 5.0 ft.	Width greater than 0.10 in. below spring line or greater than 0.012 in. above spring line or spacing of less than 1 ft.	
Distortion	None	Distortion has received structural review and has been mitigated.	Distortion has received structural review and does not require mitigation.	

Condition State Definitions Cont.

Defect	Condition State 1	Condition State 2	Condition State 3	Condition State 4
Leakage	Dry surface	Saturated surface indicating seepage may be present or evidence of past seepage.	Fully saturated surface with seepage.	Seepage could range from dripping to flowing.

Timber Tunnel Liner	
Unit of Measure Area (ft²)	Element Number 10004
Specification	Commentary
Record this element for all timber tunnel liners consisting of timber sets with or without timber lagging Timber tunnel liners function as a shell for the exterior of the tunnel and as a divider between different bores of the tunnel. The area of a tunnel liner is the product of the length (along the centerline) of the tunnel and the perimeter of the liner.	Timber Tunnel liners consist of timber sets spaced along the length of the tunnel. Typically, the space between the sets is fitted with timber lagging. In the case where the area between the timber set is not timber lagging also record a liner type, i.e. Unlined Rock, Shotcrete Liner, etc, to identify the area between the timber sets. Visual assessments may be supplemented with non-destructive or destructive testing results for all elements.

Condition State Definitions

Defect	Condition State 1	Condition State 2	Condition State 3	Condition State 4
Decay or Rot	None	Decay has started in the timber sets or lagging. No fungus growth or discoloration is present.	Decay has resulted in loss of strength, deflection, or crushing of the element but not of a sufficient magnitude to affect the strength and serviceability of the tunnel. Fungus growth and discoloration is present.	The condition warrants a structural review to determine the effect on strength or serviceability of the element or tunnel, OR a structural review has been completed and the defects impact strength and serviceability of the element or tunnel.
Voids	None	Small voids may exist in the annular space behind the lagging.	Large voids may exist in the annular space behind the lagging.	
Cracks/ Splits/ Checks/	None	Cracks, splits or checks exist in the timber sets or lagging.	Cracks, splits or checks exist in the timber sets or lagging and has impacted strength and/or serviceability but does not warrant a structural review.	

Condition State Definitions Cont.

Defect	Condition State 1	Condition State 2	Condition State 3	Condition State 4
Timber Distortion	No off-set or misalignment between the timber members (good compression fit).	Off-set or misalignment between timber members may exist but is 0.125 in. or less.	Off-set or misalignment between timber members may exist and is between 0.125 in and 0.25 in.	The condition warrants a structural review to determine the effect on strength or serviceability of the element or tunnel, OR a structural review has been completed and the defects impact strength and serviceability of the element or tunnel.
Insect Infestation	None	Infestation has started in the timber sets or lagging.	Infestation exists in the timber sets or lagging and has produced loss of strength or deflection of the element but not of a sufficient magnitude to affect the strength and/or serviceability of the tunnel.	
Loose or Missing Connectors	None	Loose bolts, or fasteners are present but the connection is in place and functioning as intended.	Missing bolts or fasteners but does not warrant a structural review.	
Leakage	Dry surface	Saturated surface indicating seepage may be present or evidence of past seepage.	Fully saturated surface with seepage.	Seepage could range from dripping to flowing.

Masonry Tunnel Liner	
Unit of Measure Area (ft²)	Element Number 10005
Specification	Commentary
Record this element for all masonry tunnel liners. Masonry tunnel liners function as a shell for the exterior of the tunnel and as a divider between different bores of the tunnel. The area of a tunnel liner is the product of the length (along the centerline) of the tunnel and the perimeter of the liner.	Visual assessments may be supplemented with non-destructive or destructive testing results for all elements.

Condition State Definitions

Defect	Condition State 1	Condition State 2	Condition State 3	Condition State 4
Efflorescence/ Rust Staining	None	Surface white without build-up or leaching without rust staining.	Heavy build-up with rust staining.	The condition warrants a structural review to determine the effect on strength or serviceability of the element or tunnel, OR a structural review has been completed and the defects impact strength and serviceability of the element or tunnel.
Mortar Breakdown	None	Cracking or voids in less than 10% of joints.	Cracking or voids in 10% or more of the joints.	
Split/Spall	None	Block or stone has split or spalled with no shifting.	Block or stone has split or spalled with shifting but does not warrant a structural review.	
Patched Area	None	Sound patch.	Unsound patch.	
Masonry Displacement	None	Block or stone has shifted slightly out of alignment.	Block or stone has shifted significantly out of alignment or is missing but does not warrant structural review.	
Distortion	None	Distortion has received structural review and has been mitigated.	Distortion has received structural review and does not require mitigation.	
Leakage	Dry surface	Saturated surface indicating seepage may be present or evidence of past seepage.	Fully saturated surface with seepage.	Seepage could range from dripping to flowing.

Unlined Rock Tunnel	
Unit of Measure Area (ft²)	Element Number 10006
Specification	Commentary
Record this element for all unlined rock tunnels. Unlined rock tunnels function as the exterior of the tunnel and as a divider between different bores of the tunnel. The area of an unlined rock tunnel is the product of the length of the tunnel (along the centerline) and the perimeter of the unlined rock.	Visual assessments may be supplemented with non-destructive or destructive testing results for all elements.

Condition State Definitions

Defect	Condition State 1	Condition State 2	Condition State 3	Condition State 4
Rockfall	No drummy rock. No blocks or slabs apparent. No shear zones are in evidence. No displacements visible along joints, cracks.	Any blocks or slabs are tightly interlocked with the surrounding rock and are not in danger of separating from the parent rock mass. Any displacements along shear zones, joints or cracks appear to be old, i.e. to have come about prior to the existence of the tunnel. Drummy areas are less than or equal to 1.0 ft. in diameter.	Any blocks or slabs that are not tightly interlocked with the surrounding rock are small, i.e. less than 1 ft. in diameter. Displacements along shear zones, joints or cracks have occurred since was constructed. Drummy areas are greater than 1.0 ft. in diameter.	The condition warrants a structural review to determine the effect on strength or serviceability of the element or tunnel, OR a structural review has been completed and the defects impact strength and serviceability of the element or tunnel.
Patched Areas	None	Sound patches.	Unsound patches.	
Leakage	Dry surface	Saturated surface indicating seepage may be present or evidence of past seepage.	Fully saturated surface with seepage.	Seepage could range from dripping to flowing.

Rock Bolt/Dowel	
Unit of Measure Each	Element Number 10007
Specification	Commentary
Record this element for all rock bolts or dowels. The total number of rock bolt/dowels is the sum of all the number of rock bolts and dowels.	Visual assessments may be supplemented with non-destructive or destructive testing results for all elements.

Condition State Definitions

Defect	Condition State 1	Condition State 2	Condition State 3	Condition State 4
Loose Bolt/Dowel Misalignment	None	Loose or missing nuts, but bolt/dowel is in alignment and functioning as intended.	Loose or missing nuts; bolt/dowel out of alignment or loose.	The condition warrants a structural review to determine the effect on strength or serviceability of the element or tunnel, OR a structural review has been completed and the defects impact strength and serviceability of the element or tunnel.
Deformation or Cracking	None	Deformation or cracking of liner or supported rock.	Deformation or cracking and spalling of liner or supported rock.	

Other Tunnel Liner	
Unit of Measure Area (ft²)	Element Number 10009
Specification	Commentary
Record this element for all tunnel liners composed of other materials. Other tunnel liners function as a shell for the exterior of the tunnel and as a divider between different bores of the tunnel. The area of a tunnel liner is the product of the length (along the centerline) of the tunnel and the perimeter of the liner.	Visual assessments may be supplemented with non-destructive or destructive testing results for all elements.

Condition State Definitions

Defect	Condition State 1	Condition State 2	Condition State 3	Condition State 4
Cracking	Cracks are present but have not allowed the rock to shift.	Cracks are present and rock has minor shifting.	Rocks are cracked with face deformation. Rocks are missing.	The condition warrants a structural review to determine the effect on strength or serviceability of the element or tunnel, OR a structural review has been completed and the defects impact strength and serviceability of the element or tunnel.
Distortion	None	Distortion has received structural review and has been mitigated.	Distortion has received structural review and does not require mitigation.	
Patched Areas	None	Sound patches.	Unsound patches.	
Leakage	Dry surface	Saturated surface indicating seepage may be present or evidence of past seepage.	Fully saturated surface with seepage.	Seepage could range from dripping to flowing.

Steel Tunnel Roof Girder	
Unit of Measure Length (ft)	Element Number 10010
Specification	Commentary
Record this element for all steel tunnel roof girders. Tunnel roof girders support the tunnel roof liner or exposed rock which constitutes the tunnel roof. The total length of tunnel roof girder is the sum of all the lengths of each tunnel roof girder.	Visual assessments may be supplemented with non-destructive or destructive testing results for all elements.

Condition State Definitions

Defect	Condition State 1	Condition State 2	Condition State 3	Condition State 4
Corrosion	None	Freckled rust. Corrosion of steel has initiated.	Section loss is evident or pack rust is present but does not warrant structural review.	The condition warrants a structural review to determine the effect on strength or serviceability of the element or tunnel, OR a structural review has been completed and the defects impact strength and serviceability of the element or tunnel.
Cracking	None	Crack that has self-arrested or has been arrested with effective arrest holes, doubling plates, or similar.	Identified crack exists that is not arrested but does not warrant structural review.	
Connection	Connection is in place and functioning as intended.	Loose fasteners or pack rust without distortion is present but the connection is in place and functioning as intended.	Missing bolts, rivets or fasteners; broken welds; or pack rust with distortion but does not warrant a structural review.	
Distortion	None	Distortion not requiring mitigation or mitigated distortion.	Distortion that requires mitigation that has not been addressed, but does not warrant structural review.	

Concrete Tunnel Roof Girder	
Unit of Measure Length (ft)	Element Number 10011
Specification	Commentary
Record this element for all concrete tunnel roof girders. Tunnel roof girders support the tunnel roof liner or exposed rock which constitutes the tunnel roof. The total length of tunnel roof girder is the sum of all the lengths of each tunnel roof girder.	Visual assessments may be supplemented with non-destructive or destructive testing results for all elements.

Condition State Definitions

Defect	Condition State 1	Condition State 2	Condition State 3	Condition State 4
Delamination/ Spall/ Patched area	None	Delaminated. Spall 1 in. or less deep or 6 in. or less diameter. Patched area that is sound.	Spall greater than 1 in. deep or greater than 6 in. diameter. Patched area that is unsound or showing distress. Does not warrant a structural review.	The condition warrants a structural review to determine the effect on strength or serviceability of the element or tunnel, OR a structural review has been completed and the defects impact strength and serviceability of the element or tunnel.
Exposed Rebar	None	Present without measureable section loss.	Present with measureable section loss, but does not warrant structural review.	
Efflorescence/ Rust Staining	None	Surface white without build-up or leaching without rust staining.	Heavy build-up with rust staining.	
Cracking	Width less than 0.012 in. or spacing greater than 3.0 ft.	Width 0.012 - 0.05 in. or spacing of 1 – 3.0 ft.	Width greater than 0.05 in. or spacing of less than 1 ft.	

Prestressed Concrete Tunnel Roof Girder	
Unit of Measure Length (ft)	Element Number 10012
Specification	Commentary
Record this element for all prestressed concrete tunnel roof girders. Tunnel roof girders support the tunnel roof liner or exposed rock which constitutes the tunnel roof. The total length of tunnel roof girder is the sum of all the lengths of each tunnel roof girder.	Visual assessments may be supplemented with non-destructive or destructive testing results for all elements.

Condition State Definitions

Defect	Condition State 1	Condition State 2	Condition State 3	Condition State 4
Delamination/ Spall/ Patched area	None	Delaminated. Spall 1 in. or less deep or 6 in. or less diameter. Patched area that is sound.	Spall greater than 1 in. deep or greater than 6 in. diameter. Patched area that is unsound or showing distress. Does not warrant structural review.	The condition warrants a structural review to determine the effect on strength or serviceability of the element or tunnel, OR a structural review has been completed and the defects impact strength and serviceability of the element or tunnel.
Exposed Rebar	None	Present without measureable section loss.	Present with measureable section loss, but does not warrant structural review.	
Exposed Prestressing	None	Present without section loss.	Present with section loss, but does not warrant structural review.	
Cracking	Width less than 0.004 in. or spacing greater than 3 ft.	Width 0.004 - 0.009 in. or spacing of 1.0 - 3.0 ft.	Width greater than 0.009 in. or spacing less than 1 ft.	
Efflorescence/ Rust Staining	None	Surface white without build-up or leaching without rust staining.	Heavy build-up with rust staining.	

Other Tunnel Roof Girder	
Unit of Measure Length (ft)	Element Number 10019
Specification	Commentary
Record this element for all tunnel roof girders composed of other materials. Tunnel roof girders support the tunnel roof liner or exposed rock which constitutes the tunnel roof. The total length of tunnel roof girder is the sum of all the lengths of each tunnel roof girder.	Visual assessments may be supplemented with non-destructive or destructive testing results for all elements.

Condition State Definitions

Defect	Condition State 1	Condition State 2	Condition State 3	Condition State 4
General Condition	Good condition – no notable distress	Fair condition- isolated breakdowns or deterioration.	Poor condition – widespread deterioration or breakdowns without reducing load capacity.	The condition warrants a structural review to determine the effect on strength or serviceability of the element or tunnel, OR a structural review has been completed and the defects impact strength and serviceability of the element or tunnel.

Steel Column/Pile	
Unit of Measure Each	Element Number 10020
Specification	Commentary
Record this element for all steel columns/piles. Tunnel columns support the tunnel roof girders, tunnel ceiling girders and tunnel invert girders. Tunnel piles provide support for the tunnel columns. The total number of columns/piles is the sum of all the number of columns and piles.	Visual assessments may be supplemented with non-destructive or destructive testing results for all elements. The majority of the columns/piles will be below grade and therefore not visible for inspection.

Condition State Definitions

Defect	Condition State 1	Condition State 2	Condition State 3	Condition State 4
Corrosion	None	Freckled rust. Corrosion of steel has initiated.	Section loss is evident or pack rust is present but does not warrant structural review.	The condition warrants a structural review to determine the effect on strength or serviceability of the element or tunnel, OR a structural review has been completed and the defects impact strength and serviceability of the element or tunnel.
Cracking	None	Cracks that has self-arrested or has been arrested with effective arrest holes, doubling plates, or similar.	Identified crack exists that is not arrested but does not require structural review.	
Connection	Connection is in place and functioning as intended.	Loose fasteners or pack rust without distortion is present but the connection is in place and functioning as intended.	Missing bolts, rivets or fasteners; broken welds; or pack rust with distortion but does not warrant a structural review.	
Distortion	None	Distortion not requiring mitigation or mitigated distortion.	Distortion that requires mitigation that has not been addressed, but does not warrant structural review.	

Concrete Column/Pile	
Unit of Measure Each	Element Number 10021
Specification	Commentary
Record this element for all concrete columns/piles. Tunnel columns support the tunnel roof girders, tunnel ceiling girders tunnel invert girders. Tunnel piles provide support for the tunnel columns. The total number of columns/piles is the sum of all the number of columns and piles.	Visual assessments may be supplemented with non-destructive or destructive testing results for all elements. The majority of the columns/piles will be below grade and therefore not visible for inspection.

Condition State Definitions

Defect	Condition State 1	Condition State 2	Condition State 3	Condition State 4
Delamination/ Spall/ Patched area	None	Delaminated. Spall 1 in. or less deep or 6 in. or less diameter. Patched area that is sound.	Spall greater than 1 in. deep or greater than 6 in. diameter. Patched area that is unsound or showing distress. Does not warrant structural review.	The condition warrants a structural review to determine the effect on strength or serviceability of the element or tunnel, OR a structural review has been completed and the defects impact strength and serviceability of the element or tunnel.
Exposed Rebar	None	Present without measureable section loss.	Present with measureable section loss, but does not warrant structural review.	
Efflorescence/ Rust Staining	None	Surface white without build-up or leaching without rust staining.	Heavy build-up with rust staining.	
Cracking	Width less than 0.012 in. or spacing greater than 3.0 ft.	Width 0.012 - 0.05 in. or spacing of 1 – 3.0 ft.	Width greater than 0.05 in. or spacing of less than 1 ft.	

Other Column/Pile	
Unit of Measure Each	Element Number 10029
Specification	Commentary
Record this element for all columns/piles composed of other material. Tunnel columns support the tunnel roof girders, tunnel ceiling girders tunnel invert girders. Tunnel piles provide support for the tunnel columns. The total number of columns/piles is the sum of all the number of columns and piles.	Visual assessments may be supplemented with non-destructive or destructive testing results for all elements. The majority of the columns/piles will be below grade and therefore not visible for inspection.

Condition State Definitions

Defect	Condition State 1	Condition State 2	Condition State 3	Condition State 4
General Condition	Good condition – no notable distress	Fair condition- isolated breakdowns or deterioration.	Poor condition – widespread deterioration or breakdowns without reducing load capacity.	The condition warrants a structural review to determine the effect on strength or serviceability of the element or tunnel, OR a structural review has been completed and the defects impact strength and serviceability of the element or tunnel.

Steel Cross Passageway	
Unit of Measure Length (ft)	Element Number 10030
Specification	Commentary
Record this element for all steel cross passageways. Cross passageways are typically oriented transverse to the tunnel bores, and are comprised of doors to allow egress between separated tunnel bores. The total length of cross passageways is the sum of all of the lengths of each cross passageway.	Visual assessments may be supplemented with non-destructive or destructive testing results for all elements.

Condition State Definitions

Defect	Condition State 1	Condition State 2	Condition State 3	Condition State 4
Corrosion	None	Freckled rust. Corrosion of the steel has initiated.	Section loss is evident or pack rust is present but does not warrant structural review.	The condition warrants a structural review to determine the effect on strength or serviceability of the element or tunnel, OR a structural review has been completed and the defects impact strength and serviceability of the element or tunnel.
Cracking	None	Crack that has self-arrested or has been arrested with effective arrest holes, doubling plates, or similar.	Identified crack exists that is not arrested but does not warrant structural review.	
Connection	Connection is in place and functioning as intended.	Loose fasteners or pack rust without distortion is present but the connection is in place and functioning as intended.	Missing bolts, rivets or fasteners; broken welds; or pack rust with distortion but does not warrant a structural review.	
Distortion	None	Distortion has received structural review and has been mitigated.	Distortion has received structural review and does not require mitigation.	
Leakage	Dry surface	Saturated surface indicating seepage may be present or evidence of past seepage.	Fully saturated surface with seepage.	Seepage could range from dripping to flowing.

Concrete Cross Passageway	
Unit of Measure Length (ft)	Element Number 10031
Specification	Commentary
Record this element for all concrete cross passageways. Cross passageways are typically oriented transverse to the tunnel bores, and are comprised of doors to allow egress between separated tunnel bores. The total length of cross passageways is the sum of all of the lengths of each cross passageway.	Visual assessments may be supplemented with non-destructive or destructive testing results for all elements.

Condition State Definitions

Defect	Condition State 1	Condition State 2	Condition State 3	Condition State 4
Delamination/ Spall/ Patched area	None	Delaminated. Spall 1 in. or less deep or 6 in. or less in diameter. Patched area that is sound.	Spall greater than 1 in. deep or greater than 6 in. diameter. Patched area that is unsound or showing distress. Does not warrant structural review.	The condition warrants a structural review to determine the effect on strength or serviceability of the element or tunnel, OR a structural review has been completed and the defects impact strength and serviceability of the element or tunnel.
Exposed Rebar	None	Present without measureable section loss.	Present with measureable section loss, but does not warrant structural review.	
Efflorescence/ Rust Staining	None	Surface white without build-up or leaching without rust staining.	Heavy build-up with rust staining.	
Cracking (Liners)	Width less than 0.012 in. or spacing greater than 5.0 ft.	Width 0.012 - 0.10 in. below spring line or spacing of 1.0 – 5.0 ft.	Width greater than 0.10 in. below spring line or greater than 0.012 in. above spring line or spacing of less than 1 ft.	
Distortion	None	Distortion has received structural review and has been mitigated.	Distortion has received structural review and does not require mitigation.	

Condition State Definitions Cont.

Defect	Condition State 1	Condition State 2	Condition State 3	Condition State 4
Leakage	Dry surface	Saturated surface indicating seepage may be present or evidence of past seepage.	Fully saturated surface with seepage.	Seepage could range from dripping to flowing.

Shotcrete Cross Passageway	
Unit of Measure Length (ft)	Element Number 10033
Specification	Commentary
Record this element for all shotcrete cross passageways. Cross passageways are typically oriented transverse to the tunnel bores, and are comprised of doors to allow egress between separated tunnel bores. The total length of cross passageways is the sum of all of the lengths of each cross passageway.	Visual assessments may be supplemented with non-destructive or destructive testing results for all elements.

Condition State Definitions

Defect	Condition State 1	Condition State 2	Condition State 3	Condition State 4
Delamination/ Spall/ Patched area	None	Delaminated. Spall 1 in. or less deep or 6 in. or less in diameter. Patched area that is sound.	Spall greater than 1 in. deep or greater than 6 in. diameter. Patched area that is unsound or showing distress. Does not warrant structural review.	The condition warrants a structural review to determine the effect on strength or serviceability of the element or tunnel, OR a structural review has been completed and the defects impact strength and serviceability of the element or tunnel.
Exposed Rebar	None	Present without measureable section loss.	Present with measureable section loss, but does not warrant structural review.	
Efflorescence/ Rust Staining	None	Surface white without build-up or leaching without rust staining.	Heavy build-up with rust staining.	
Cracking (Liners)	Width less than 0.012 in. or spacing greater than 5.0 ft.	Width 0.012 - 0.10 in. below spring line or spacing of 1.0 – 5.0 ft.	Width greater than 0.10 in. below spring line or greater than 0.012 in. above spring line or spacing of less than 1 ft.	
Distortion	None	Distortion has received structural review and has been mitigated.	Distortion has received structural review and does not require mitigation.	

Condition State Definitions Cont.

Defect	Condition State 1	Condition State 2	Condition State 3	Condition State 4
Leakage	Dry surface	Saturated surface indicating seepage may be present or evidence of past seepage.	Fully saturated surface with seepage.	Seepage could range from dripping to flowing.

Timber Cross Passageway	
Unit of Measure Length (ft)	Element Number 10034
Specification	Commentary
Record this element for all timber cross passageways. Cross passageways are typically oriented transverse to the tunnel bores, and are comprised of doors to allow egress between separated tunnel bores. The total length of cross passageways is the sum of all of the lengths of each cross passageway.	Visual assessments may be supplemented with non-destructive or destructive testing results for all elements.

Condition State Definitions

Defect	Condition State 1	Condition State 2	Condition State 3	Condition State 4
Decay or Rot	None	Decay has started in the timber sets or lagging. No fungus growth or discoloration is present.	Decay has resulted in loss of strength, deflection, or crushing of the element but not of a sufficient magnitude to affect the strength and serviceability of the tunnel. Fungus growth and discoloration is present.	The condition warrants a structural review to determine the effect on strength or serviceability of the element or tunnel, OR a structural review has been completed and the defects impact strength and serviceability of the element or tunnel.
Voids	None	Small voids may exist in the annular space behind the lagging.	Large voids may exist in the annular space behind the lagging.	
Cracks/ Splits/ Checks/	None	Cracks, splits or checks exist in the timber sets or lagging.	Cracks, splits or checks exist in the timber sets or lagging and has impacted strength and/or serviceability but does not warrant a structural review.	

Condition State Definitions Cont.

Defect	Condition State 1	Condition State 2	Condition State 3	Condition State 4
Timber Distortion	No off-set or misalignment between the timber members (good compression fit).	Off-set or misalignment between timber members may exist but is 0.125 in. or less.	Off-set or misalignment between timber members may exist and is between 0.125 in and 0.25 in.	The condition warrants a structural review to determine the effect on strength or serviceability of the element or tunnel, OR a structural review has been completed and the defects impact strength and serviceability of the element or tunnel.
Insect Infestation	None	Infestation has started in the timber sets or lagging.	Infestation exists in the timber sets or lagging and has produced loss of strength or deflection of the element but not of a sufficient magnitude to affect the strength and/or serviceability of the tunnel.	
Loose or Missing Connectors	None	Loose bolts, or fasteners are present but the connection is in place and functioning as intended.	Missing bolts or fasteners but does not warrant a structural review.	
Leakage	Dry surface	Saturated surface indicating seepage may be present or evidence of past seepage.	Fully saturated surface with seepage.	Seepage could range from dripping to flowing.

Masonry Cross Passageway	
Unit of Measure Length (ft)	Element Number 10035
Specification	Commentary
Record this element for all masonry cross passageways. Cross passageways are typically oriented transverse to the tunnel bores, and are comprised of doors to allow egress between separated tunnel bores. The total length of cross passageways is the sum of all of the lengths of each cross passageway.	Visual assessments may be supplemented with non-destructive or destructive testing results for all elements.

Condition State Definitions

Defect	Condition State 1	Condition State 2	Condition State 3	Condition State 4
Efflorescence/ Rust Staining	None	Surface white without build-up or leaching without rust staining.	Heavy build-up with rust staining.	The condition warrants a structural review to determine the effect on strength or serviceability of the element or tunnel, OR a structural review has been completed and the defects impact strength and serviceability of the element or tunnel.
Mortar Breakdown	None	Cracking or voids in less than 10% of joints.	Cracking or voids in 10% or more of the joints.	
Split/Spall	None	Block or stone has split or spalled with no shifting.	Block or stone has split or spalled with shifting but does not warrant a structural review.	
Patched Area	None	Sound patch.	Unsound patch.	
Masonry Displacement	None	Block or stone has shifted slightly out of alignment.	Block or stone has shifted significantly out of alignment or is missing but does not warrant structural review.	
Distortion	None	Distortion has received structural review and has been mitigated.	Distortion has received structural review and does not require mitigation.	
Leakage	Dry surface	Saturated surface indicating seepage may be present or evidence of past seepage.	Fully saturated surface with seepage.	Seepage could range from dripping to flowing.

Unlined Rock Cross Passageway	
Unit of Measure Length (ft)	Element Number 10036
Specification	Commentary
Record this element for all unlined rock cross passageways. Cross passageways are typically oriented transverse to the tunnel bores, and are comprised of doors to allow egress between separated tunnel bores. The total length of cross passageways is the sum of all of the lengths of each cross passageway.	Visual assessments may be supplemented with non-destructive or destructive testing results for all elements.

Condition State Definitions

Defect	Condition State 1	Condition State 2	Condition State 3	Condition State 4
Rockfall	No drummy rock. No blocks or slabs apparent. No shear zones are in evidence. No displacements visible along joints, cracks.	Any blocks or slabs are tightly interlocked with the surrounding rock and are not in danger of separating from the parent rock mass. Any displacements along shear zones, joints or cracks appear to be old, i.e. to have come about prior to the existence of the tunnel. Drummy areas are less than or equal to 1.0 ft. in diameter.	Any blocks or slabs that are not tightly interlocked with the surrounding rock are small, i.e. less than 1 ft. in diameter. Displacements along shear zones, joints or cracks have occurred since was constructed. Drummy areas are greater than 1.0 ft. in diameter.	The condition warrants a structural review to determine the effect on strength or serviceability of the element or tunnel, OR a structural review has been completed and the defects impact strength and serviceability of the element or tunnel.
Patched Areas	None	Sound patches.	Unsound patches.	
Leakage	Dry surface	Saturated surface indicating seepage may be present or evidence of past seepage.	Fully saturated surface with seepage.	Seepage could range from dripping to flowing.

Other Cross Passageway	
Unit of Measure Length (ft)	Element Number 10039
Specification	Commentary
Record this element for all other cross passageways. Cross passageways are typically oriented transverse to the tunnel bores, and are comprised of doors to allow egress between separated tunnel bores. The total length of cross passageways is the sum of all of the lengths of each cross passageway.	Visual assessments may be supplemented with non-destructive or destructive testing results for all elements.

Condition State Definitions

Defect	Condition State 1	Condition State 2	Condition State 3	Condition State 4
Cracking	Cracks are present but have not allowed the rock to shift.	Cracks are present and rock has minor shifting.	Rocks are cracked with face deformation. Rocks are missing.	The condition warrants a structural review to determine the effect on strength or serviceability of the element or tunnel, OR a structural review has been completed and the defects impact strength and serviceability of the element or tunnel.
Distortion	None	Distortion has received structural review and has been mitigated.	Distortion has received structural review and does not require mitigation.	
Patched Areas	None	Sound patches.	Unsound patches.	
Leakage	Dry surface	Saturated surface indicating seepage may be present or evidence of past seepage.	Fully saturated surface with seepage.	Seepage could range from dripping to flowing.

Concrete Interior Walls	
Unit of Measure Area (ft²)	Element Number 10041
Specification	Commentary
Record this element for all concrete interior walls. This element defines those internal walls in tunnels which are usually placed to separate traffic travelling in opposite directions. The internal wall also serves as a barrier between tunnel segments in an emergency to protect evacuees from smoke inhalation, fire or hazardous conditions. The area of the interior wall is the product of the length (along the centerline) of the tunnel and the height.	Visual assessments may be supplemented with non-destructive or destructive testing results for all elements.

Condition State Definitions

Defect	Condition State 1	Condition State 2	Condition State 3	Condition State 4
Delamination/ Spall/ Patched area	None	Delaminated. Spall 1 in. or less deep or 6 in. or less diameter. Patched area that is sound.	Spall greater than 1 in. deep or greater than 6 in. diameter. Patched area that is unsound or showing distress. Does not warrant structural review.	The condition warrants a structural review to determine the effect on strength or serviceability of the element or tunnel, OR a structural review has been completed and the defects impact strength and serviceability of the element or tunnel.
Exposed Rebar	None	Present without measureable section loss.	Present with measureable section loss, but does not warrant structural review.	
Efflorescence/ Rust Staining	None	Surface white without build-up or leaching without rust staining.	Heavy build-up with rust staining.	
Cracking (Liners)	Width less than 0.012 in. or spacing greater than 5.0 ft.	Width 0.012 - 0.10 in. below spring line or spacing of 1.0 – 5.0 ft.	Width greater than 0.10 in. below spring line or greater than 0.012 in. above spring line or spacing of less than 1 ft.	

Other Interior Walls	
Unit of Measure Area (ft²)	Element Number 10049
Specification	Commentary
Record this element for all interior walls composed of other materials. This element defines those internal walls in tunnels which are usually placed to separate traffic travelling in opposite directions. The internal wall also serves as a barrier between tunnel segments in an emergency to protect evacuees from smoke inhalation, fire or hazardous conditions. The area of the interior wall is the product of the length (along the centerline) of the tunnel and the height.	Visual assessments may be supplemented with non-destructive or destructive testing results for all elements.

Condition State Definitions

Defect	Condition State 1	Condition State 2	Condition State 3	Condition State 4
General Condition	Good condition – no notable distress	Fair condition- isolated breakdowns or deterioration.	Poor condition – widespread deterioration or breakdowns without reducing load capacity.	The condition warrants a structural review to determine the effect on strength or serviceability of the element or tunnel, OR a structural review has been completed and the defects impact strength and serviceability of the element or tunnel.

Concrete Portal	
Unit of Measure Area (ft²)	Element Number 10051
Specification	Commentary
Record this element for all concrete portals. This element defines the portal façade, which comprise the architectural/structural elements that are above the roadway at the opening of the tunnel bore. The area of the portal is the product of the width and height of the portal minus the area of the roadway opening. The area may include wingwalls which retain soil and rock near the portal but does not include walls leading up to the portal.	Visual assessments may be supplemented with non-destructive or destructive testing results for all elements.

Condition State Definitions

Defect	Condition State 1	Condition State 2	Condition State 3	Condition State 4
Delamination/ Spall/ Patched area	None	Delaminated. Spall 1 in. or less deep or 6 in. or less diameter. Patched area that is sound.	Spall greater than 1 in. deep or greater than 6 in. diameter. Patched area that is unsound or showing distress. Does not warrant structural review.	The condition warrants a structural review to determine the effect on strength or serviceability of the element or tunnel, OR a structural review has been completed and the defects impact strength and serviceability of the element or tunnel.
Exposed Rebar	None	Present without measureable section loss.	Present with measureable section loss, but does not warrant structural review.	
Efflorescence/ Rust Staining	None	Surface white without build-up or leaching without rust staining.	Heavy build-up with rust staining.	
Cracking (Liners)	Width less than 0.012 in. or spacing greater than 5.0 ft.	Width 0.012 - 0.10 in. below spring line or spacing of 1.0 – 5.0 ft.	Width greater than 0.10 in. below spring line or greater than .012 in. above spring line or spacing of less than 1 ft.	

Condition State Definitions Cont.

Defect	Condition State 1	Condition State 2	Condition State 3	Condition State 4
Settlement	None	Exists within tolerable limits or arrested with no observed structural distress.	Exceeds tolerable limits but does not warrant structural review.	The condition warrants a structural review to determine the effect on strength or serviceability of the element or tunnel, OR a structural review has been completed and the defects impact strength and serviceability of the element or tunnel.

Masonry Portal	
Unit of Measure Area (ft²)	Element Number 10055
Specification	Commentary
Record this element for all masonry portals. This element defines the portal façade, which comprise the architectural/structural elements that are above the roadway at the opening of the tunnel bore. The area of the portal is the product of the width and height of the portal minus the area of the roadway opening. The area may include wingwalls which retain soil and rock near the portal but does not include walls leading up to the portal.	Visual assessments may be supplemented with non-destructive or destructive testing results for all elements.

Condition State Definitions

Defect	Condition State 1	Condition State 2	Condition State 3	Condition State 4
Efflorescence/ Rust Staining	None	Surface white without build-up or leaching without rust staining.	Heavy build-up with rust staining.	The condition warrants a structural review to determine the effect on strength or serviceability of the element or tunnel, OR a structural review has been completed and the defects impact strength and serviceability of the element or tunnel.
Mortar Breakdown	None	Cracking or voids in less than 10% of joints.	Cracking or voids in 10% or more of the joints.	
Split/Spall	None	Block or stone has split or spalled with no shifting.	Block or stone has split or spalled with shifting but does not warrant a structural review.	
Patched Area	None	Sound patch.	Unsound patch.	
Masonry Displacement	None	Block or stone has shifted slightly out of alignment.	Block or stone has shifted significantly out of alignment or is missing but does not warrant structural review.	
Settlement	None	Exists within tolerable limits or arrested with no observed structural distress.	Exceeds tolerable limits but does not warrant structural review.	

Other Portal	
Unit of Measure Area (ft²)	Element Number 10059
Specification	Commentary
Record this element for all portals composed of other materials. This element defines the portal façade, which comprise the architectural/structural elements that are above the roadway at the opening of the tunnel bore. The area of the portal is the product of the width and height of the portal minus the area of the roadway opening. The area may include wingwalls which retain soil and rock near the portal but does not include walls leading up to the portal.	Visual assessments may be supplemented with non-destructive or destructive testing results for all elements.

Condition State Definitions

Defect	Condition State 1	Condition State 2	Condition State 3	Condition State 4
General Condition	Good condition – no notable distress	Fair condition- isolated breakdowns or deterioration.	Poor condition – widespread deterioration or breakdowns without reducing load capacity.	The condition warrants a structural review to determine the effect on strength or serviceability of the element or tunnel, OR a structural review has been completed and the defects impact strength and serviceability of the element or tunnel.
Settlement	None	Exists within tolerable limits or arrested with no observed structural distress.	Exceeds tolerable limits but does not warrant structural review.	

Concrete Ceiling Slab	
Unit of Measure Area (ft²)	Element Number 10061
Specification	Commentary
Record this element for all concrete ceiling slabs. This element defines those structural slabs which separate the space above the roadway from the upper plenum. The area of the ceiling slab is the product of the width and length of the slab.	Visual assessments may be supplemented with non-destructive or destructive testing results for all elements. This element may include a suspended ceiling which defines the upper limits of the upper plenum. The roof of a tunnel would be considered part of the tunnel liner.

Condition State Definitions

Defect	Condition State 1	Condition State 2	Condition State 3	Condition State 4
Delamination/ Spall/ Patched area	None	Delaminated. Spall 1 in. or less deep or 6 in. or less diameter. Patched area that is sound.	Spall greater than 1 in. deep or greater than 6 in. diameter. Patched area that is unsound or showing distress. Does not warrant structural review.	The condition warrants a structural review to determine the effect on strength or serviceability of the element or tunnel, OR a structural review has been completed and the defects impact strength and serviceability of the element or tunnel.
Exposed Rebar	None	Present without measureable section loss.	Present with measureable section loss, but does not warrant structural review.	
Efflorescence	None	Surface white without build-up or leaching without rust staining.	Heavy build-up with rust staining.	
Cracking	Width less than 0.012 in. or spacing greater than 3.0 ft.	Width 0.012 - 0.05 in. or spacing of 1 – 3.0 ft.	Width greater than 0.05 in. or spacing of less than 1 ft.	

Other Ceiling Slab	
Unit of Measure Area (ft²)	Element Number 10069
Specification	Commentary
Record this element for all ceiling slabs composed of other materials. This element defines those structural slabs which separate the space above the roadway from the upper plenum. The area of the ceiling slab is the product of the width and length of the slab.	Visual assessments may be supplemented with non-destructive or destructive testing results for all elements. The roof of a tunnel would be considered part of the tunnel liner.

Condition State Definitions

Defect	Condition State 1	Condition State 2	Condition State 3	Condition State 4
General Condition	Good condition – no notable distress	Fair condition- isolated breakdowns or deterioration.	Poor condition – widespread deterioration or breakdowns without reducing load capacity.	The condition warrants a structural review to determine the effect on strength or serviceability of the element or tunnel, OR a structural review has been completed and the defects impact strength and serviceability of the element or tunnel.

Steel Ceiling Girder	
Unit of Measure Length (ft)	Element Number 10070
Specification	Commentary
Record this element for all steel ceiling girders. This element defines the girders that support the structural ceiling slabs which separate the space above the roadway from the upper plenum. The total quantity for ceiling girder is the sum of all the lengths of each tunnel ceiling girder.	Visual assessments may be supplemented with non-destructive or destructive testing results for all elements.

Condition State Definitions

Defect	Condition State 1	Condition State 2	Condition State 3	Condition State 4
Corrosion	None	Freckled rust. Corrosion of steel has initiated.	Section loss is evident or pack rust is present but does not warrant structural review.	The condition warrants a structural review to determine the effect on strength or serviceability of the element or tunnel, OR a structural review has been completed and the defects impact strength and serviceability of the element or tunnel.
Cracking	None	Crack that has self-arrested or has been arrested with effective arrest holes, doubling plates, or similar.	Identified crack exists that is not arrested but does not warrant structural review.	
Connection	Connection is in place and functioning as intended.	Loose fasteners or pack rust without distortion is present but the connection is in place and functioning as intended.	Missing bolts, rivets or fasteners; broken welds; or pack rust with distortion but does not warrant a structural review.	
Distortion	None	Distortion not requiring mitigation or mitigating distortion.	Distortion that requires mitigation that has not been addressed but does not require structural review.	

Concrete Ceiling Girder	
Unit of Measure Length (ft)	Element Number 10071
Specification	Commentary
Record this element for all concrete ceiling girders. This element defines the girders that support the structural ceiling slabs which separate the space above the roadway from the upper plenum. The total quantity for ceiling girder is the sum of all the lengths of each tunnel ceiling girder.	Visual assessments may be supplemented with non-destructive or destructive testing results for all elements.

Condition State Definitions

Defect	Condition State 1	Condition State 2	Condition State 3	Condition State 4
Delamination/ Spall/ Patched area	None	Delaminated. Spall 1 in. or less deep or 6 in. or less diameter. Patched area that is sound.	Spall greater than 1 in. deep or greater than 6 in. diameter. Patched area that is unsound or showing distress. Does not warrant structural review.	The condition warrants a structural review to determine the effect on strength or serviceability of the element or tunnel, OR a structural review has been completed and the defects impact strength and serviceability of the element or tunnel.
Exposed Rebar	None	Present without measureable section loss.	Present with measureable section loss, but does not warrant structural review.	
Efflorescence/ Rust Staining	None	Surface white without build-up or leaching without rust staining.	Heavy build-up with rust staining.	
Cracking	Width less than 0.012 in. or spacing greater than 3.0 ft.	Width 0.012 - 0.05 in. or spacing of 1 – 3.0 ft.	Width greater than 0.05 in. or spacing of less than 1 ft.	

Prestressed Concrete Ceiling Girder	
Unit of Measure Length (ft)	Element Number 10072
Specification	Commentary
Record this element for all prestressed concrete ceiling girders. This element defines the girders that support the structural ceiling slabs which separate the space above the roadway from the upper plenum. The total quantity for ceiling girder is the sum of all the lengths of each tunnel ceiling girder.	Visual assessments may be supplemented with non-destructive or destructive testing results for all elements.

Condition State Definitions

Defect	Condition State 1	Condition State 2	Condition State 3	Condition State 4
Delamination/ Spall/ Patched area	None	Delaminated. Spall 1 in. or less deep or 6 in. or less diameter. Patched area that is sound.	Spall greater than 1 in. deep or greater than 6 in. diameter. Patched area that is unsound or showing distress. Does not warrant structural review.	The condition warrants a structural review to determine the effect on strength or serviceability of the element or tunnel, OR a structural review has been completed and the defects impact strength and serviceability of the element or tunnel.
Exposed Rebar	None	Present without measureable section loss.	Present with measureable section loss, but does not warrant structural review.	
Exposed Prestressing	None	Present without section loss.	Present with section loss, but does not warrant structural review.	
Cracking	Width less than 0.004 in. or spacing greater than 3 ft.	Width 0.004 - 0.009 in. or spacing of 1.0 – 3.0 ft.	Width greater than 0.009 in. or spacing less than 1 ft.	
Efflorescence/ Rust Staining	None	Surface white without build-up or leaching without rust staining.	Heavy build-up with rust staining.	

Other Ceiling Girder	
Unit of Measure Length (ft)	Element Number 10079
Specification	Commentary
Record this element for all ceiling girders composed of other materials. This element defines the girders that support the structural ceiling slabs which separate the space above the roadway from the upper plenum. The total quantity for ceiling girder is the sum of all the lengths of each tunnel ceiling girder.	Visual assessments may be supplemented with non-destructive or destructive testing results for all elements.

Condition State Definitions

Defect	Condition State 1	Condition State 2	Condition State 3	Condition State 4
General Condition	Good condition – no notable distress	Fair condition- isolated breakdowns or deterioration.	Poor condition – widespread deterioration or breakdowns without reducing load capacity.	The condition warrants a structural review to determine the effect on strength or serviceability of the element or tunnel, OR a structural review has been completed and the defects impact strength and serviceability of the element or tunnel.

Steel Hanger and Anchorages	
Unit of Measure Each	Element Number 10080
Specification	Commentary
Record this element for all steel hangers and anchorages. Hangers are tension members that support ceiling girders or ceiling panels. The anchorages of the hangers are typically attached to the tunnel roof and ceiling panels. The total quantity for hangers and anchorages is the sum of all the number of hanger and anchorage units.	Visual assessments may be supplemented with non-destructive or destructive testing results for all elements. Distress observed on either hanger or anchorages should be considered in the condition assessment. Ultrasonic testing results should be taken into consideration in the condition assessment if available.

Condition State Definitions

Defect	Condition State 1	Condition State 2	Condition State 3	Condition State 4
Corrosion	None	Freckled rust. Corrosion of steel has initiated.	Section loss is evident or pack rust is present but does not warrant structural review.	The condition warrants a structural review to determine the effect on strength or serviceability of the element or tunnel, OR a structural review has been completed and the defects impact strength and serviceability of the element or tunnel.
Cracking	None	Crack that has self-arrested or has been arrested with effective arrest holes, doubling plates, or similar.	Identified crack exists that is not arrested but does not warrant structural review.	
Connection	Connection is in place and functioning as intended.	Loose fasteners or pack rust without distortion is present but the connection is in place and functioning as intended.	Missing bolts, rivets or fasteners; broken welds; or pack rust with distortion but does not warrant a structural review.	
Bowing and Elongation	None	Isolated hangers are bowed or elongated.	Multiple adjacent hangers are bowed or elongated. Anchors have a gap <1/8” or are visibly elongated.	

Condition State Definitions Cont.

Defect	Condition State 1	Condition State 2	Condition State 3	Condition State 4
Creep	None	Displacement is visible and anchorage has received structural review and has been mitigated.	Displacement is visible and anchorage has received structural review and does not require mitigation.	The condition warrants a structural review to determine the effect on strength or serviceability of the element or tunnel, OR a structural review has been completed and the defects impact strength and serviceability of the element or tunnel.
Anchorage area	Sound anchorage.	Cracking around anchorage areas, but concrete is sound.	Cracking or spalling around anchorage area and concrete is not sound.	

Other Hanger and Anchorages	
Unit of Measure Each	Element Number 10089
Specification	Commentary
Record this element for all hangers and anchorages composed of other materials. Hangers are tension members that support ceiling girders or ceiling panels. The anchorages of the hangers are typically attached to the tunnel roof and ceiling panels. The total quantity for hangers and anchorages is the sum of all the number of hanger and anchorage units.	Visual assessments may be supplemented with non-destructive or destructive testing results for all elements. Distress observed on either hanger or anchorage should be considered in the condition assessment. Ultrasonic testing results should be taken into consideration in the condition assessment if available.

Condition State Definitions

Defect	Condition State 1	Condition State 2	Condition State 3	Condition State 4
General Condition	Good condition – no notable distress	Fair condition- isolated breakdowns or deterioration.	Poor condition – widespread deterioration or breakdowns without reducing load capacity.	The condition warrants a structural review to determine the effect on strength or serviceability of the element or tunnel, OR a structural review has been completed and the defects impact strength and serviceability of the element or tunnel.
Connections	Sound	Isolated fasteners are loose at their connections.	Adjacent hangers are loose. Fasteners are missing from adjacent hanger connections at isolated locations.	
Bowing and Elongation	None	Isolated hangers are bowed or elongated.	Multiple adjacent hangers are bowed or elongated. Anchors have a gap <1/8” or are visibly elongated.	
Creep	None	Displacement is visible and anchorage has received structural review and has been mitigated.	Displacement is visible and anchorage has received structural review and does not require mitigation.	

Condition State Definitions Cont.

Defect	Condition State 1	Condition State 2	Condition State 3	Condition State 4
Anchorage area	Sound anchorage.	Cracking around anchorage areas, but concrete is sound.	Cracking or spalling around anchorage area and concrete is not sound.	The condition warrants a structural review to determine the effect on strength or serviceability of the element or tunnel, OR a structural review has been completed and the defects impact strength and serviceability of the element or tunnel.

Steel Ceiling Panels	
Unit of Measure Area (ft²)	Element Number 10090
Specification	Commentary
Record this element for all steel ceiling panels. Ceiling panels separate the upper plenum from space above the tunnel roadway. Ceiling panels are typically supported by hangers. The area of the ceiling panel is the product of the width and length of the panel.	Visual assessments may be supplemented with non-destructive or destructive testing results for all elements.

Condition State Definitions

Defect	Condition State 1	Condition State 2	Condition State 3	Condition State 4
Corrosion	None	Freckled rust. Corrosion of steel has initiated.	Section loss is evident or pack rust is present but does not warrant structural review.	The condition warrants a structural review to determine the effect on strength or serviceability of the element or tunnel, OR a structural review has been completed and the defects impact strength and serviceability of the element or tunnel.
Cracking	None	Crack that has self-arrested or has been arrested with effective arrest holes, doubling plates, or similar.	Identified crack exists that is not arrested but does not warrant structural review.	
Connection	Connection is in place and functioning as intended.	Loose fasteners or pack rust without distortion is present but the connection is in place and functioning as intended.	Missing bolts, rivets or fasteners; broken welds; or pack rust with distortion but does not warrant a structural review.	
Distortion	None	Distortion not requiring mitigation or mitigated distortion.	Distortion that requires mitigation that has not been addressed but does not require structural review.	

Concrete Ceiling Panels	
Unit of Measure Area (ft²)	Element Number 10091
Specification	Commentary
Record this element for all concrete ceiling panels. Ceiling panels separate the upper plenum from space above the tunnel roadway. Ceiling panels are typically supported by hangers. The area of the ceiling panel is the product of the width and length of the panel.	Visual assessments may be supplemented with non-destructive or destructive testing results for all elements.

Condition State Definitions

Defect	Condition State 1	Condition State 2	Condition State 3	Condition State 4
Delamination/ Spall/ Patched area	None	Delaminated. Spall 1 in. or less deep or 6 in. or less diameter. Patched area that is sound.	Spall greater than 1 in. deep or greater than 6 in. diameter. Patched area that is unsound or showing distress. Does not warrant structural review.	The condition warrants a structural review to determine the effect on strength or serviceability of the element or tunnel, OR a structural review has been completed and the defects impact strength and serviceability of the element or tunnel.
Exposed Rebar	None	Present without measureable section loss.	Present with measureable section loss, but does not warrant structural review.	
Efflorescence/ Rust Staining	None	Surface white without build-up or leaching without rust staining.	Heavy build-up with rust staining.	
Cracking	Width less than 0.012 in. or spacing greater than 3.0 ft.	Width 0.012 - 0.05 in. or spacing of 1.0 – 3.0 ft.	Width greater than 0.05 in. or spacing of less than 1 ft.	

Other Ceiling Panels	
Unit of Measure Area (ft²)	Element Number 10099
Specification	Commentary
Record this element for all ceiling panels composed of other materials. Ceiling panels separate the upper plenum from space above the tunnel roadway. Ceiling panels are typically supported by hangers. The area of the ceiling panel is the product of the width and length of the panel.	Visual assessments may be supplemented with non-destructive or destructive testing results for all elements.

Condition State Definitions

Defect	Condition State 1	Condition State 2	Condition State 3	Condition State 4
General Condition	Good condition – no notable distress	Fair condition- isolated breakdowns or deterioration.	Poor condition – widespread deterioration or breakdowns without reducing load capacity.	The condition warrants a structural review to determine the effect on strength or serviceability of the element or tunnel, OR a structural review has been completed and the defects impact strength and serviceability of the element or tunnel.

Concrete Invert Slab	
Unit of Measure Area (ft²)	Element Number 10101
Specification	Commentary
Record this element for all concrete invert slabs. This element defines those structural slabs which support the roadway and traffic loads. The total area of the invert slab is the product of the width and length of the slab.	Visual assessments may be supplemented with non-destructive or destructive testing results for all elements. The slab evaluation is three dimensional with the defects observed on the top surface, bottom surface, or both, and being captured using the defined condition states. Slab top or bottom surfaces that are not visible for inspection shall be assessed based on the available visible surface. If both top and bottom surfaces are not visible, the condition shall be assessed based on destructive and nondestructive testing or indicators in the materials covering the surfaces.

Condition State Definitions

Defect	Condition State 1	Condition State 2	Condition State 3	Condition State 4
Delamination/ Spall/ Patched area	None	Delaminated. Spall 1 in. or less deep or 6 in. or less diameter. Patched area that is sound.	Spall greater than 1 in. deep or greater than 6 in. diameter. Patched area that is unsound or showing distress. Does not warrant structural review.	The condition warrants a structural review to determine the effect on strength or serviceability of the element or tunnel, OR a structural review has been completed and the defects impact strength and serviceability of the element or tunnel.
Exposed Rebar	None	Present without measureable section loss.	Present with measureable section loss, but does not warrant structural review.	
Efflorescence/ Rust Staining	None	Surface white without build-up or leaching without rust staining.	Heavy build-up with rust staining.	
Cracking	Width less than 0.012 in. or spacing greater than 3.0 ft.	Width 0.012 - 0.05 in. or spacing of 1.0 – 3.0 ft.	Width greater than 0.05 in. or spacing of less than 1 ft.	

Other Invert Slab	
Unit of Measure Area (ft²)	Element Number 10109
Specification	Commentary
Record this element for all invert slabs composed of other materials. This element defines those structural slabs which support the roadway and traffic loads. The total area of the invert slab is the product of the width and length of the slab.	Visual assessments may be supplemented with non-destructive or destructive testing results for all elements. The slab evaluation is three dimensional with the defects observed on the top surface, bottom surface, or both, and being captured using the defined condition states. Slab top or bottom surfaces that are not visible for inspection shall be assessed based on the available visible surface. If both top and bottom surfaces are not visible, the condition shall be assessed based on destructive and nondestructive testing or indicators in the materials covering the surfaces.

Condition State Definitions

Defect	Condition State 1	Condition State 2	Condition State 3	Condition State 4
General Condition	Good condition – no notable distress	Fair condition- isolated breakdowns or deterioration.	Poor condition – widespread deterioration or breakdowns without reducing load capacity.	The condition warrants a structural review to determine the effect on strength or serviceability of the element or tunnel, OR a structural review has been completed and the defects impact strength and serviceability of the element or tunnel.

Concrete Slab-on-Grade	
Unit of Measure Area (ft²)	Element Number 10111
Specification	Commentary
Record this element for all concrete slabs-on-grade. This element defines a slab that is supported continuously on a subbase material. The area of the slab-on-grade is the product of the width and length of the slab.	Visual assessments may be supplemented with non-destructive or destructive testing results for all elements.

Condition State Definitions

Defect	Condition State 1	Condition State 2	Condition State 3	Condition State 4
Delamination/ Spall/ Patched area	None	Delaminated. Spall 1 in. or less deep or 6 in. or less diameter. Patched area that is sound.	Spall greater than 1 in. deep or greater than 6 in. diameter. Patched area that is unsound or showing distress. Does not warrant structural review.	The condition warrants a structural review to determine the effect on strength or serviceability of the element or tunnel, OR a structural review has been completed and the defects impact strength and serviceability of the element or tunnel.
Exposed Rebar	None	Present without measureable section loss.	Present with measureable section loss, but does not warrant structural review.	
Cracking	Width less than 0.012 in. or spacing greater than 3.0 ft.	Width 0.012 - 0.05 in. or spacing of 1.0 – 3.0 ft.	Width greater than 0.05 in. or spacing of less than 1 ft.	
Settlement	None	Exists within tolerable limits or arrested with no observed structural distress.	Exceeds tolerable limits but does not warrant structural review.	

Other Slab-on-Grade	
Unit of Measure Area (ft²)	Element Number 10119
Specification	Commentary
Record this element for all slabs-on-grade composed of other materials. This element defines a slab that is supported continuously on a subbase material. The area of the slab-on-grade is the product of the width and length of the slab.	Visual assessments may be supplemented with non-destructive or destructive testing results for all elements.

Condition State Definitions

Defect	Condition State 1	Condition State 2	Condition State 3	Condition State 4
General Condition	Good condition – no notable distress	Fair condition- isolated breakdowns or deterioration.	Poor condition – widespread deterioration or breakdowns without reducing load capacity.	The condition warrants a structural review to determine the effect on strength or serviceability of the element or tunnel, OR a structural review has been completed and the defects impact strength and serviceability of the element or tunnel.
Settlement	None	Exists within tolerable limits or arrested with no observed structural distress.	Exceeds tolerable limits but does not warrant structural review.	

Steel Invert Girder	
Unit of Measure Length (ft)	Element Number 10120
Specification	Commentary
Record this element for all steel invert girders. This element defines the invert girders which support the invert slabs. The total quantity for invert girder is the sum of all the lengths of each invert girder.	Visual assessments may be supplemented with non-destructive or destructive testing results for all elements.

Condition State Definitions

Defect	Condition State 1	Condition State 2	Condition State 3	Condition State 4
Corrosion	None	Freckled rust. Corrosion of steel has initiated.	Section loss is evident or pack rust is present but does not warrant structural review.	The condition warrants a structural review to determine the effect on strength or serviceability of the element or tunnel, OR a structural review has been completed and the defects impact strength and serviceability of the element or tunnel.
Cracking	None	Crack that has self-arrested or has been arrested with effective arrest holes, doubling plates, or similar.	Identified crack exists that is not arrested but does not warrant structural review.	
Connection	Connection is in place and functioning as intended.	Loose fasteners or pack rust without distortion is present but the connection is in place and functioning as intended.	Missing bolts, rivets or fasteners; broken welds; or pack rust with distortion but does not warrant a structural review.	
Distortion	None	Distortion not requiring mitigation or mitigated distortion.	Distortion that requires mitigation that has not been addressed but does not require structural review.	

Concrete Invert Girder	
Unit of Measure Length (ft)	Element Number 10121
Specification	Commentary
Record this element for all concrete invert girders. This element defines the invert girders which support the invert slabs. The total quantity for invert girder is the sum of all the lengths of each invert girder.	Visual assessments may be supplemented with non-destructive or destructive testing results for all elements.

Condition State Definitions

Defect	Condition State 1	Condition State 2	Condition State 3	Condition State 4
Delamination/ Spall/ Patched area	None	Delaminated. Spall 1 in. or less deep or 6 in. or less diameter. Patched area that is sound.	Spall greater than 1 in. deep or greater than 6 in. diameter. Patched area that is unsound or showing distress. Does not warrant structural review.	The condition warrants a structural review to determine the effect on strength or serviceability of the element or tunnel, OR a structural review has been completed and the defects impact strength and serviceability of the element or tunnel.
Exposed Rebar	None	Present without measureable section loss.	Present with measureable section loss, but does not warrant structural review.	
Efflorescence	None	Surface white without build-up or leaching without rust staining.	Heavy build-up with rust staining.	
Cracking	Width less than 0.012 in. or spacing greater than 3.0 ft.	Width 0.012 - 0.05 in. or spacing of 1.0 – 3.0 ft.	Width greater than 0.05 in. or spacing of less than 1 ft.	

Prestressed Concrete Invert Girder	
Unit of Measure Length (ft)	Element Number 10122
Specification	Commentary
Record this element for all prestressed concrete invert girders. This element defines the invert girders which support the invert slabs. The total quantity for invert girder is the sum of all the lengths of each invert girder.	Visual assessments may be supplemented with non-destructive or destructive testing results for all elements.

Condition State Definitions

Defect	Condition State 1	Condition State 2	Condition State 3	Condition State 4
Delamination/ Spall/ Patched area	None	Delaminated. Spall 1 in. or less deep or 6 in. or less diameter. Patched area that is sound.	Spall greater than 1 in. deep or greater than 6 in. diameter. Patched area that is unsound or showing distress. Does not warrant structural review.	The condition warrants a structural review to determine the effect on strength or serviceability of the element or tunnel, OR a structural review has been completed and the defects impact strength and serviceability of the element or tunnel.
Exposed Rebar	None	Present without measureable section loss.	Present with measureable section loss, but does not warrant structural review.	
Exposed Prestressing	None	Present without section loss.	Present with section loss, but does not warrant structural review.	
Cracking	Width less than 0.004 in. or spacing greater than 3 ft.	Width 0.004 - 0.009 in. or spacing of 1.0 – 3.0 ft.	Width greater than 0.009 in. or spacing less than 1 ft.	
Efflorescence/ Rust Staining	None	Surface white without build-up or leaching without rust staining.	Heavy build-up with rust staining.	

Other Invert Girder	
Unit of Measure Length (ft)	Element Number 10129
Specification	Commentary
Record this element for all invert girders composed of other materials. This element defines the invert girders which support the invert slabs. The total quantity for invert girder is the sum of all the lengths of each invert girder.	Visual assessments may be supplemented with non-destructive or destructive testing results for all elements.

Condition State Definitions

Defect	Condition State 1	Condition State 2	Condition State 3	Condition State 4
General Condition	Good condition – no notable distress	Fair condition – isolated breakdowns or deterioration.	Poor condition – widespread deterioration or breakdowns without reducing load capacity.	The condition warrants a structural review to determine the effect on strength or serviceability of the element or tunnel, OR a structural review has been completed and the defects impact strength and serviceability of the element or tunnel.

Strip Seal Expansion Joint	
Unit of Measure Length (ft)	Element Number 10130
Specification	Commentary
Record this element for all strip seal expansion joints. This element defines those roadway and tunnel expansion joint devices which utilize a neoprene type waterproof gland with some type of metal extrusion or other system to anchor the gland. The total quantity for expansion joints is the sum of all the lengths of each joint.	

Condition State Definitions

Defect	Condition State 1	Condition State 2	Condition State 3	Condition State 4
Leakage	None	Minimal. Minor dripping through the joint.	Moderate. More than a drip and less than free flow of water.	Free flow of water through the joint.
Seal Adhesion	Fully adhered.	Adhered for more than 50% of the joint height.	Adhered 50% or less of the joint height but still some adhesion.	Complete loss of adhesion.
Seal Damage	None	Seal abrasion without punctures.	Punctured or ripped or partially pulled out.	Punctured completely through, pulled out, or missing.
Seal cracking	None	Surface crack.	Crack that partially penetrates the seal.	Crack that fully penetrates the seal.
Debris Impaction	No debris to a shallow cover of loose debris may be evident but does not affect the performance of the joint.	Partially filled with hard-packed material, but still allowing free movement.	Completely filled and impacts joint movement.	Completely filled and prevents joint movement.
Adjacent Deck or Header	Sound. No spall, delamination or unsound patch.	Edge delamination or spall 1 in. or less deep or 6 in. or less in diameter. No exposed rebar. Patched area that is sound.	Spall greater than 1 in. deep or greater than 6 in. diameter. Exposed rebar. Delamination or unsound patched area that makes the	Spall, delamination, unsound patched area or loose joint anchor that prevents the joint from functioning as

			joint loose.	intended.

Condition State Definitions Cont.

Defect	Condition State 1	Condition State 2	Condition State 3	Condition State 4
Metal Deterioration or Damage	None	Freckled rust, metal has no cracks, or impact damage. Connections may be loose but functioning as intended.	Section loss, missing or broken fasteners, cracking of the metal or impact damage but joint is still functioning.	Metal cracking, section loss, damage or connection failure that prevents the joint from functioning as intended.

Pourable Joint Seal	
Unit of Measure Length (ft)	Element Number 10131
Specification	Commentary
Record this element for all pourable joint seals. This element defines those roadway and tunnel joints filled with a pourable seal with or without a backer. The total quantity for expansion joints is the sum of all the lengths of each joint.	

Condition State Definitions

Defect	Condition State 1	Condition State 2	Condition State 3	Condition State 4
Leakage	None	Minimal. Minor dripping through the joint.	Moderate. More than a drip and less than free flow of water.	Free flow of water through the joint.
Seal Adhesion	Fully adhered.	Adhered for more than 50% of the joint height.	Adhered 50% or less of the joint height but still some adhesion.	Complete loss of adhesion.
Seal Damage	None	Seal abrasion without punctures.	Punctured or ripped or partially pulled out.	Punctured completely through, pulled out, or missing.
Seal Cracking	None	Surface crack.	Crack that partially penetrates the seal.	Crack that fully penetrates the seal.
Debris Impaction	No debris to shallow cover of loose debris may be evident but does not affect the performance of the joint.	Partially filled with hard-packed material, but still allowing free movement.	Completely filled and impacts joint movement.	Completely filled and prevents joint movement.
Adjacent Deck or Header	Sound. No spall, delamination or unsound patch.	Edge delamination or spall 1 in. or less deep or 6 in. or less in diameter. No exposed rebar. Patched area that is sound.	Spall greater than 1 in. deep or greater than 6 in. diameter. Exposed rebar. Delamination or unsound patched area that makes the joint loose.	Spall, delamination, unsound patched area or loose joint anchor that prevents the joint from functioning as intended.

Compression Joint Seal	
Unit of Measure Length (ft)	Element Number 10132
Specification	Commentary
Record this element for all compression joint seals. This element defines those roadway and tunnel joints filled with a preformed compression type seal. This joint does not have an anchor system to confine the seal. The total quantity for expansion joints is the sum of all the lengths of each joint.	

Condition State Definitions

Defect	Condition State 1	Condition State 2	Condition State 3	Condition State 4
Leakage	None	Minimal. Minor dripping through joints.	Moderate. More than a drip and less than free flow of water.	Free flow of water through the joint.
Seal Adhesion	Fully adhered.	Adhered for more than 50% of the joint height.	Adhered 50% or less of the joint height but still some adhesion.	Complete loss of adhesion.
Seal Damage	None	Seal abrasion without punctures.	Punctured or ripped or partially pulled out.	Punctured completely through, pulled out, or missing.
Seal Cracking	None	Surface crack.	Crack that partially penetrates the seal.	Crack that fully penetrates the seal.
Debris Impaction	No debris to a shallow cover of loose debris may be evident but does not affect the performance of the joint.	Partially filled with hard-packed material, but still allowing free movement.	Completely filled and impacts joint movement.	Completely filled and prevents joint movement.
Adjacent Deck or Header	Sound. No spall, delamination or unsound patch.	Edge delamination or spall 1 in. or less deep or 6 in. or less in diameter. No exposed rebar. Patched area that is sound.	Spall greater than 1 in. deep or greater than 6 in. diameter. Exposed rebar. Delamination or unsound patched area that makes the joint loose.	Spall, delamination, unsound patched area or loose joint anchor that prevents the joint from functioning as intended.

Assembly Joint with Seal	
Unit of Measure Length (ft)	Element Number 10133
Specification	Commentary
Record this element for all assembly joints with seals. This element defines only those roadway and tunnel joints filled with an assembly mechanism that have a seal. The total quantity for expansion joints is the sum of all the lengths of each joint.	

Condition State Definitions

Defect	Condition State 1	Condition State 2	Condition State 3	Condition State 4
Leakage	None	Minimal. Minor dripping through joints.	Moderate. More than a drip and less than free flow of water.	Free flow of water through the joint.
Seal Adhesion	Fully adhered.	Adhered for more than 50% of the joint height.	Adhered 50% or less of joint height but still some adhesion.	Complete loss of adhesion.
Seal Damage	None	Seal abrasion without punctures.	Punctured or ripped or partially pulled out.	Punctured completely through, pulled out, or missing.
Seal Cracking	None	Surface crack.	Crack that partially penetrates the seal.	Crack that fully penetrates the seal.
Debris Impaction	No debris to a shallow cover of loose debris may be evident but does not affect the performance of the joint.	Partially filled with hard-packed material, but still allowing free movement.	Completely filled and impacts joint movement.	Completely filled and prevents joint movement.
Adjacent Deck or Header	Sound. No spall, delamination or unsound patch.	Edge delamination or spall 1 in. or less or 6 in. or less in diameter. No exposed rebar. Patched area that is sound.	Spall greater than 1 in. deep or greater than 6 in. diameter. Exposed rebar. Delamination or unsound patched area that makes the joint loose.	Spall, delamination, unsound patched area or loose joint anchor that prevents the joint from functioning as intended.

Condition State Definitions Cont.

Defect	Condition State 1	Condition State 2	Condition State 3	Condition State 4
Metal Deterioration or Damage	None	Freckled rust, metal has no cracks, or impact damage. Connections may be loose but functioning as intended.	Section loss, missing or broken fasteners, cracking of the metal or impact damage but joint is still functioning.	Metal cracking, section loss, damage or connection failure that prevents the joint from functioning as intended.

Open Expansion Joint	
Unit of Measure Length (ft)	Element Number 10134
Specification	Commentary
Record this element for all open expansion joints. This element defines only those roadway and tunnel joints that are open and not sealed. The total quantity for expansion joints is the sum of all the lengths of each joint.	

Condition State Definitions

Defect	Condition State 1	Condition State 2	Condition State 3	Condition State 4
Debris Impaction	No debris to a shallow cover of loose debris may be evident but does not affect the performance of the joint.	Partially filled with hard-packed material, but still allowing free movement.	Completely filled and impacts joint movement.	Completely filled and prevents joint movement.
Adjacent Deck or Header	Sound. No spall, delamination or unsound patch.	Edge delamination or spall 1 in. or less or 6 in. or less in diameter. No exposed rebar. Patched area that is sound.	Spall greater than 1 in. deep or greater than 6 in. diameter. Exposed rebar. Delamination or unsound patched area that makes the joint loose.	Spall, delamination, unsound patched area or loose joint anchor that prevents the joint from functioning as intended.

Assembly Joint without Seal	
Unit of Measure Length (ft)	Element Number 10135
Specification	Commentary
Record this element for all assembly joints without seals. This element defines only those roadway and tunnel assembly joints that are open and not sealed. These joints include finger and sliding plate joints. The total quantity for expansion joints is the sum of all the lengths of each joint.	

Condition State Definitions

Defect	Condition State 1	Condition State 2	Condition State 3	Condition State 4
Debris Impaction	No debris to a shallow cover of loose debris may be evident but does not affect the performance of the joint.	Partially filled with hard-packed material, but still allowing free movement.	Completely filled and impacts joint movement.	Completely filled and prevents joint movement.
Adjacent Deck or Header	Sound. No spall, delamination or unsound patch.	Edge delamination or spall 1 in. or less or 6 in. or less in diameter. No exposed rebar. Patched area that is sound.	Spall greater than 1 in. deep or greater than 6 in. diameter. Exposed rebar. Delamination or unsound patched area that makes the joint loose.	Spall, delamination, unsound patched area or loose joint anchor that prevents the joint from functioning as intended.
Metal Deterioration or Damage	None	Freckled rust, metal has no cracks, or impact damage. Connections may be loose but functioning as intended.	Section loss, missing or broken fasteners, cracking of the metal or impact damage but joint is still functioning.	Metal cracking, section loss, damage or connection failure that prevents the joint from functioning as intended.

Other Joint	
Unit of Measure Length (ft)	Element Number 10139
Specification	Commentary
Record this element for all other expansion joints. This element defines those roadway and tunnel expansion joint devices which utilize a neoprene type waterproof gland with some type of metal extrusion or other system to anchor the gland. The total quantity for expansion joints is the sum of all the lengths of each joint.	

Condition State Definitions

Defect	Condition State 1	Condition State 2	Condition State 3	Condition State 4
Leakage	None	Minimal. Minor dripping through the joint.	Moderate. More than a drip and less than free flow of water.	Free flow of water through the joint.
Debris Impaction	No debris to a shallow cover of loose debris may be evident but does not affect the performance of the joint.	Partially filled with hard-packed material, but still allowing free movement.	Completely filled and impacts joint movement.	Completely filled and prevents joint movement.
Adjacent Deck or Header	Sound. No spall, delamination or unsound patch.	Edge delamination or spall 1 in. or less deep or 6 in. or less in diameter. No exposed rebar. Patched area that is sound.	Spall greater than 1 in. deep or greater than 6 in. diameter. Exposed rebar. Delamination or unsound patched area that makes the joint loose.	Spall, delamination, unsound patched area or loose joint anchor that prevents the joint from functioning as intended.
Metal Deterioration or Damage	None	Freckled rust, metal has no cracks, or impact damage. Connections may be loose but functioning as intended.	Section loss, missing or broken fasteners, cracking of the metal or impact damage but joint is still functioning.	Metal cracking, section loss, damage or connection failure that prevents the joint from functioning as intended.

Gasket	
Unit of Measure Length (ft)	Element Number 10140
Specification	Commentary
Record this element for all gaskets. This element defines those roadway and tunnel gaskets which are joints between segmental tunnel liners. The total quantity for gasket is the sum of all lengths of each gasket.	

Condition State Definitions

Defect	Condition State 1	Condition State 2	Condition State 3	Condition State 4
Leakage	None	Minimal. Minor dripping through joints.	Moderate. More than a drip and less than free flow of water.	Free flow of water through the joint.
Seal Adhesion	Fully adhered.	Adhered for more than 50% of the joint height.	Adhered 50% or less of joint height but still some adhesion.	Complete loss of adhesion.
Seal Damage	None	Seal abrasion without punctures.	Punctured or ripped or partially pulled out.	Punctured completely through, pulled out, or missing.
Seal Cracking	None	Surface crack.	Crack that partially penetrates the seal.	Crack that fully penetrates the seal.
Debris Impaction	No debris to a shallow cover of loose debris may be evident but does not affect the performance of the joint.	Partially filled with hard-packed material, but still allowing free movement.	Completely filled and impacts joint movement.	Completely filled and prevents joint movement.
Adjacent Deck or Header	Sound. No spall, delamination or unsound patch.	Edge delamination or spall 1 in. or less or 6 in. or less in diameter. No exposed rebar. Patched area that is sound.	Spall greater than 1 in. deep or greater than 6 in. diameter. Exposed rebar. Delamination or unsound patched area that makes the joint loose.	Spall, delamination, unsound patched area or loose joint anchor that prevents the joint from functioning as intended.

Condition State Definitions Cont.

Defect	Condition State 1	Condition State 2	Condition State 3	Condition State 4
Metal Deterioration or Damage	None	Freckled rust, metal has no cracks, or impact damage. Connections may be loose but functioning as intended.	Section loss, missing or broken fasteners, cracking of the metal or impact damage but joint is still functioning.	Metal cracking, section loss, damage or connection failure that prevents the joint from functioning as intended.

3.3—Civil Section

This section defines tunnel civil elements and the methodology for determining total element quantities and condition state quantities. The following elements are included.

Element Type	Element #	Element Name	Unit of Measure
Wearing Surface	10151	Concrete Wearing Surface	area, ft^2
	10158	Asphalt Wearing Surface	area, ft^2
	10159	Other Wearing Surface	area, ft^2
Traffic Barrier	10160	Steel Traffic Barrier	length, ft
	10161	Concrete Traffic Barrier	length, ft
	10169	Other Traffic Barrier	length, ft
Pedestrian Railing	10170	Steel Pedestrian Railing	length, ft
	10171	Concrete Pedestrian Railing	length, ft
	10179	Other Pedestrian Railing	length, ft

Concrete Wearing Surface	
Unit of Measure Area (ft²)	Element Number 10151
Specification	Commentary
Record this element for all concrete wearing surfaces. This element defines the tunnel roadway surface that carries the vehicles. The wearing surface is sacrificial and helps protect the structural slab from wear and damage. The total area of the wearing surface is the product of the width and length of the protected surface.	Visual assessments may be supplemented with non-destructive or destructive testing results for all elements.

Condition State Definitions

Defect	Condition State 1	Condition State 2	Condition State 3	Condition State 4
Delamination/ Spall/ Patched area/pothole	None	Delaminated. Spall less than 1 in. deep or less than 6 in. diameter. Patched area that is sound. Partial depth pothole.	Spalls 1 in. deep or greater or 6 in. diameter or greater. Patched area that is unsound or showing distress. Full depth pothole.	The wearing surface is no longer effective.
Cracking	Width less than 0.012 in. or spacing greater than 3.0 ft.	Width 0.012 - 0.05 in. or spacing of 1.0 – 3.0 ft.	Width greater than 0.05 in. or spacing of less than 1 ft.	
Effectiveness	Fully effective. No evidence of leakage or further deterioration of the protected element.	Substantially effective. Deterioration of the protected element has slowed.	Limited effectiveness. Deterioration of the protected element has progressed.	

Asphalt Wearing Surface	
Unit of Measure Area (ft²)	Element Number 10158
Specification	Commentary
Record this element for all asphalt wearing surfaces. This element defines the tunnel roadway surface that carries the vehicles. The wearing surface is sacrificial and helps protect the structural slab from wear and damage. The total area of the wearing surface is the product of the width and length of the protected surface.	Visual assessments may be supplemented with non-destructive or destructive testing results for all elements.

Condition State Definitions

Defect	Condition State 1	Condition State 2	Condition State 3	Condition State 4
General Condition	Good condition – no notable distress	Fair condition- isolated breakdowns or deterioration.	Poor condition – widespread deterioration or breakdowns without reducing load capacity.	The wearing surface is no longer effective.
Effectiveness	Fully effective. No evidence of leakage or further deterioration of the protected element.	Substantially effective. Deterioration of the protected element has slowed.	Limited effectiveness. Deterioration of the protected element has progressed.	

Other Wearing Surface	
Unit of Measure Area (ft²)	Element Number 10159
Specification	Commentary
Record this element for all wearing surfaces composed of other materials. This element defines the tunnel roadway surface that carries the vehicles. The wearing surface is sacrificial and helps protect the structural slab from wear and damage. The total area of the wearing surface is the product of the width and length of the protected surface.	Visual assessments may be supplemented with non-destructive or destructive testing results for all elements.

Condition State Definitions

Defect	Condition State 1	Condition State 2	Condition State 3	Condition State 4
General Condition	Good condition – no notable distress	Fair condition- isolated breakdowns or deterioration.	Poor condition – widespread deterioration or breakdowns without reducing load capacity.	The wearing surface is no longer effective.
Effectiveness	Fully effective. No evidence of leakage or further deterioration of the protected element.	Substantially effective. Deterioration of the protected element has slowed.	Limited effectiveness. Deterioration of the protected element has progressed.	

Steel Traffic Barrier	
Unit of Measure Length (ft)	Element Number 10160
Specification	Commentary
Record this element for all steel traffic barriers. This element defines those tunnel barriers adjacent to a roadway. Horizontal members must be steel, however, posts may be made of steel, timber, concrete or other materials. The total quantity for traffic barrier is the sum of all the lengths of each traffic barrier.	Visual assessments may be supplemented with non-destructive or destructive testing results for all elements.

Condition State Definitions

Defect	Condition State 1	Condition State 2	Condition State 3	Condition State 4
Corrosion	None	Freckled rust. Corrosion of steel has initiated.	Section loss is evident or pack rust is present but does not warrant structural review.	The condition warrants a structural review to determine the effect on strength or serviceability of the element or tunnel, OR a structural review has been completed and the defects impact strength and serviceability of the element or tunnel.
Cracking	None	Crack that has self-arrested or has been arrested with effective arrest holes, doubling plates, or similar.	Identified crack exists that is not arrested but does not warrant structural review.	
Connection	Connection is in place and functioning as intended.	Loose fasteners or pack rust without distortion is present but the connection is in place and functioning as intended.	Missing bolts, rivets or fasteners; broken welds; or pack rust with distortion but does not warrant a structural review.	
Distortion	None	Distortion not requiring mitigation or mitigated distortion.	Distortion that requires mitigation that has not been addressed but does not warrant structural review.	

Concrete Traffic Barrier	
Unit of Measure Length (ft)	Element Number 10161
Specification	Commentary
Record this element for all concrete traffic barriers. This element defines those tunnel barriers adjacent to a roadway. All elements of the barrier must be concrete. The total quantity for traffic barrier is the sum of all the lengths of each traffic barrier.	Visual assessments may be supplemented with non-destructive or destructive testing results for all elements.

Condition State Definitions

Defect	Condition State 1	Condition State 2	Condition State 3	Condition State 4
Delamination/ Spall/ Patched area	None	Delaminated. Spall 1 in. or less deep or 6 in. or less diameter. Patched area that is sound.	Spall greater than 1 in. deep or greater than 6 in. diameter. Patched area that is unsound or showing distress. Does not warrant structural review.	The condition warrants a structural review to determine the effect on strength or serviceability of the element or tunnel, OR a structural review has been completed and the defects impact strength and serviceability of the element or tunnel.
Exposed Rebar	None	Present without measureable section loss.	Present with measureable section loss, but does not warrant structural review.	
Efflorescence/ Rust Staining	None	Surface white without build-up or leaching without rust staining.	Heavy build-up with rust staining.	
Cracking	Width less than 0.012 in. or spacing greater than 3.0 ft.	Width 0.012 - 0.05 in. or spacing of 1.0 – 3.0 ft.	Width greater than 0.05 in. or spacing of less than 1 ft.	

Other Traffic Barrier	
Unit of Measure Length (ft)	Element Number 10169
Specification	Commentary
Record this element for all traffic barriers composed of other materials. This element defines those tunnel barriers adjacent to a roadway. The total quantity for traffic barrier is the sum of all the lengths of each traffic barrier.	Visual assessments may be supplemented with non-destructive or destructive testing results for all elements.

Condition State Definitions

Defect	Condition State 1	Condition State 2	Condition State 3	Condition State 4
General Condition	Good condition – no notable distress	Fair condition- isolated breakdowns or deterioration.	Poor condition – widespread deterioration or breakdowns without reducing load capacity.	The condition warrants a structural review to determine the effect on strength or serviceability of the element or tunnel, OR a structural review has been completed and the defects impact strength and serviceability of the element or tunnel.

Steel Pedestrian Railing	
Unit of Measure Length (ft)	Element Number 10170
Specification	Commentary
Record this element for all steel pedestrian railing. This element defines those tunnel railings adjacent to a walkway. The total quantity for pedestrian railing is the sum of all the lengths of each pedestrian railing.	

Condition State Definitions

Defect	Condition State 1	Condition State 2	Condition State 3	Condition State 4
Corrosion	None	Freckled rust. Corrosion of steel has initiated.	Section loss is evident or pack rust is present but does not warrant structural review.	The condition warrants a structural review to determine the effect on strength or serviceability of the element or tunnel, OR a structural review has been completed and the defects impact strength and serviceability of the element or tunnel.
Cracking	None	Crack that has self-arrested or has been arrested with effective arrest holes, doubling plates, or similar.	Identified crack exists that is not arrested but does not warrant structural review.	
Connection	Connection is in place and functioning as intended.	Loose fasteners or pack rust without distortion is present but the connection is in place and functioning as intended.	Missing bolts, rivets or fasteners; broken welds; or pack rust with distortion but does not warrant a structural review.	
Distortion	None	Distortion not requiring mitigation or mitigated distortion.	Distortion that requires mitigation that has not been addressed but does not warrant structural review.	
Out-of-Plumb	None	Minor tilt which is barely noticeable.	Excessive tilt that affects operations or near failure.	

Concrete Pedestrian Railing	
Unit of Measure Length (ft)	Element Number 10171
Specification	Commentary
Record this element for all concrete pedestrian railing. This element defines those tunnel railings adjacent to a walkway. The total quantity for pedestrian railing is the sum of all the lengths of each pedestrian railing.	

Condition State Definitions

Defect	Condition State 1	Condition State 2	Condition State 3	Condition State 4
Delamination/ Spall/ Patched area	None	Delaminated. Spall 1 in. or less deep or 6 in. or less diameter. Patched area that is sound.	Spall greater than 1 in. deep or greater than 6 in. diameter. Patched area that is unsound or showing distress. Does not warrant structural review.	The condition warrants a structural review to determine the effect on strength or serviceability of the element or tunnel, OR a structural review has been completed and the defects impact strength and serviceability of the element or tunnel.
Exposed Rebar	None	Present without measureable section loss.	Present with measureable section loss, but does not warrant structural review.	
Efflorescence/ Rust Staining	None	Surface white without build-up or leaching without rust staining.	Heavy build-up with rust staining.	
Cracking	Width less than 0.012 in. or spacing greater than 3.0 ft.	Width 0.012 - 0.05 in. or spacing of 1.0 – 3.0 ft.	Width greater than 0.05 in. or spacing of less than 1 ft.	
Out-of-Plumb	None	Minor tilt which is barely noticeable.	Excessive tilt that affects operations or near failure.	

Other Pedestrian Railing	
Unit of Measure Length (ft)	Element Number 10179
Specification	Commentary
Record this element for all pedestrian railing composed of other materials. This element defines those tunnel railings adjacent to a walkway. The total quantity for pedestrian railing is the sum of all the lengths of each pedestrian railing.	

Condition State Definitions

Defect	Condition State 1	Condition State 2	Condition State 3	Condition State 4
General Condition	Good condition – no notable distress	Fair condition- isolated breakdowns or deterioration.	Poor condition – widespread deterioration or breakdowns without reducing load capacity.	The condition warrants a structural review to determine the effect on strength or serviceability of the element or tunnel, OR a structural review has been completed and the defects impact strength and serviceability of the element or tunnel.
Out-of-Plumb	None	Minor tilt which is barely noticeable.	Excessive tilt that affects operations or near failure.	

3.4—Mechanical Systems Section

This section defines tunnel mechanical system elements and the methodology for determining total element quantities and condition state quantities. The following elements are included.

Element Type	Element #	Element Name	Unit of Measure
Ventilation System	10200	Ventilation System	each
	10201	Fans	each
Drainage and Pumping System	10300	Drainage and Pumping System	each
	10301	Pumps	each
Emergency Generator System	10400	Emergency Generator System	each
Flood Gate	10475	Flood Gate	each

Ventilation System	
Unit of Measure Each	Element Number 10200
Specification	Commentary
Record this element for all ventilation systems. This element describes the components that provide the supply of fresh air to the tunnel while removing stale air and contaminants. The total quantity for ventilation system is the sum of all the ventilation systems.	The ventilation system may include the following subcomponents: Fans - Fan Motors, Fan Controller, Airways, Sound Attenuators, Dampers, Damper Motor, Damper Controller, Air Quality Monitoring Equipment (CO), Control Panels and Conduit. Damper inspection should also include a review of the maintenance records for each piece of equipment and note any special or frequent maintenance problems. For this element, a separate ventilation system is considered to be one system. Tunnels with twin bores may have separate ventilation systems and would be considered as two. Some tunnels may have a ventilation system at each portal that work independently and would also be considered as two.

Condition State Definitions

Defect	Condition State 1	Condition State 2	Condition State 3	Condition State 4
System Condition	The system is in good condition – no notable distress.	The system is in fair condition – isolated breakdowns or deterioration.	The system is in poor condition – widespread deterioration or breakdowns reducing operational capacity, without impacting the serviceability of the element or tunnel.	The condition warrants evaluation to determine the effect on serviceability of the element or tunnel or the evaluation has determined there is an impact on the serviceability of the element or tunnel.

Fans	
Unit of Measure Each	Element Number 10201
Specification	Commentary
Record this element for all fans. This element describes the components that produce a current of air which provides the supply of fresh air to the tunnel while removing stale air and contaminants. The total quantity for fans is the sum of all the fans.	The fans may include the following subcomponents: Fan Motors, Fan Controller, etc.

Condition State Definitions

Defect	Condition State 1	Condition State 2	Condition State 3	Condition State 4
Fan Operation (includes fan belt, fan chain, fan bearing temperature and/or fan drive temperature)	Operates on all speeds and in all modes with no noticeable temperature rise.	Operates on all speeds and in all modes. Requires manual restart or manual control to achieve this. Drive(s) require some adjustment. More than normal play observed. (If belt – minor wear/deterioration to belt.) Less than 40 degree F temperature rise form ambient temperatures during operation.	Fan operates on at least one speed or only operates in manual mode. Drive(s) require major adjustment. Severe play and/or belt/chain noise is observed. (If belt – moderate wear/deterioration to belt.) Between 40 degree F and 80 degree F temperature rise form ambient temperatures during operation.	Fan will not operate on any speed. Over 80 degree F temperature rise for ambient temperatures during operation.
Fan Condition	No notable distress.	Isolated breakdowns or deterioration.	The system is in poor condition – widespread deterioration or breakdowns reducing operational capacity, without impacting the serviceability of the element or tunnel.	The fan warrants evaluation to determine the effect on serviceability of the element or tunnel or the evaluation has determined there is an impact on the serviceability of the element or tunnel.

Drainage and Pumping System	
Unit of Measure Each	Element Number 10300
_____	_____
Record this element for all drainage and pumping systems. This element includes storm drains, piping, pumps and water treatment equipment for the removal of water that may enter the tunnel from the portals, vent shafts, and cracks in the tunnel lining. Drainage at the tunnel facility also handles the drippings from vehicles traversing the tunnel and potential spills from trucks hauling liquid materials. The total quantity for drainage and pumping system is the sum of all the draining and pumping systems.	The drainage and pumping system may include the following subcomponents: Pumps – Sump Pumps, Pump Motors, Pump Controller, Piping, Drains and Water Treatment Equipment. For this element, a separate drainage and pumping system is considered to be one system. Tunnels with twin bores may have separate draining and pumping systems and would be considered as two. Some tunnels may have a draining and pumping system at each portal that work independently and would also be considered as two.

Condition State Definitions

Defect	Condition State 1	Condition State 2	Condition State 3	Condition State 4
System Condition	The system is in good condition – no notable distress.	The system is in fair condition – isolated breakdowns or deterioration.	The system is in poor condition – widespread deterioration or breakdowns reducing operational capacity, without impacting the serviceability of the element or tunnel.	The condition warrants evaluation to determine the effect on serviceability of the element or tunnel or the evaluation has determined there is an impact on the serviceability of the element or tunnel.

Pumps	
Unit of Measure Each	Element Number 10301
Specification	Commentary
Record this element for all pumps. This element includes the component that moves water that may enter the tunnel from the portals, vent shafts, and crack in the tunnel lining. The total quantity for pumps is the sum of all the pumps.	The pumps may include the following subcomponents: Sump Pumps, Pump Motors, Pump Controller, etc.

Condition State Definitions

Defect	Condition State 1	Condition State 2	Condition State 3	Condition State 4
Pump Operation (Includes Sump Pump, Pump Motor, Pump Controller, Pump Control Panel, Oil Leakage, Pump Leakage, Noise and Vibration and Temperature)	Operates at all speeds and in all modes. Shut-off valves operate freely and without binding. Fair amount of noise and vibration velocity of 100 in./s or less. No oil leakage observed. No leakage observed at pump seal. No water leakage noted in immediate piping and valves. Motor temperature is within expected limits.	Operates at all speeds and in all modes in a reduced capacity. Shut-off valves operate with some resistance and binding but do appear to fully open/seal. Slightly rough noise and vibration velocity between 100 and 300 in./s. Limited exterior staining from oil seepage at seals. Limited exterior water seepage from seals with seals appearing wet. Motor temperature is slightly increased during motor operation.	Operates intermittently or haltingly. Shut-off valves difficult or impossible to operate. Rough noise and vibration velocity in excess of 300 in./s. Extensive exterior staining from oil seepage around seals. Measurable water seepage around seals that can be quantified in drips per minute. Motor temperature is moderately above what is expected and/or hot spots of temperature exist.	Pump will not operate. Pooling of oil on exterior surfaces of seals or significant reduction of interior lubricant level. A visible stream of water on exterior surfaces of seals or significant reduction of pump performance. Motor temperature is drastically increased and motor function is influenced.

Emergency Generator System	
Unit of Measure Each	Element Number 10400
Specification	Commentary
Record this element for all emergency generator systems. These elements are the mechanical components of an emergency generator and power system which consist of fuel delivery, fuel storage, an engine cooling and exhaust systems. The emergency generator provides a back-up power source in the event of utility service failure to the tunnel. The mechanical systems support the proper operation of the generator to provide back-up power. The total quantity for emergency generator is the sum of all the emergency generator systems.	The emergency generator system may include the following subcomponents: Fuel Main Storage Tank, Fuel Day Tanks, Circulating Fuel Pumps, Fuel Tank Venting, Fuel Tank Sensors, Coolant Systems, Exhaust Manifold Insulation and Lagging, Exhaust Air Louver and Damper Actuator, Supply Air Louver and Damper Actuator, Generator, Generator Control Equipment, Control Panels and Conduit. For this element, a separate emergency generator system is considered to be one system. Tunnels with twin bores may have separate emergency generator systems and would be considered as two.

Condition State Definitions

Defect	Condition State 1	Condition State 2	Condition State 3	Condition State 4
System Condition	The system is in good condition – no notable distress.	The system is in fair condition – isolated breakdowns or deterioration.	The system is in poor condition – widespread deterioration or breakdowns reducing operational capacity, without impacting the serviceability of the element or tunnel.	The condition warrants evaluation to determine the effect on serviceability of the element or tunnel or the evaluation has determined there is an impact on the serviceability of the element or tunnel.

Flood Gate	
Unit of Measure Each	Element Number 10475
Specification	Commentary
Record this element for all flood gates. These elements are the actual gates, seals, mechanical components, and power supply of a flood gate system. The flood gates are typically located at each portal for each bore. The flood gates are usually used when the tunnel roadway is closed and the bores are threatened with taking on water at the portals. The total quantity for flood gate is the sum of all the flood gates.	For this element, a separate flood gate is considered to be one gate. Some tunnels may have a flood gate at each portal that work independently and would be considered as two.

Condition State Definitions

Defect	Condition State 1	Condition State 2	Condition State 3	Condition State 4
System Condition	The system is in good condition – no notable distress.	The system is in fair condition – isolated breakdowns or deterioration.	The system is in poor condition – widespread deterioration or breakdowns reducing operational capacity, without impacting the serviceability of the element or tunnel.	The condition warrants evaluation to determine the effect on serviceability of the element or tunnel or the evaluation has determined there is an impact on the serviceability of the element or tunnel.

3.5—Electrical and Lighting Systems Section

This section defines tunnel electrical and lighting system elements and the methodology for determining total element quantities and condition state quantities. The following elements are included.

Element Type	Element #	Element Name	Unit of Measure
Electrical Distribution	10500	Electrical Distribution System	each
Emergency Distribution	10550	Emergency Distribution System	each
Tunnel Lighting	10600	Tunnel Lighting Systems	each
	10601	Tunnel Lighting Fixtures	each
Emergency Lighting	10620	Emergency Lighting Systems	each
	10621	Emergency Lighting Fixtures	each

Electrical Distribution System	
Unit of Measure Each	Element Number 10500
Specification	Commentary
Record this element for all electrical distribution systems. The electrical distribution system consists of the electrical equipment, wiring, conduit, and cable used for distributing electrical energy from the utility supply (service entrance) to the line terminals of utilization equipment. The total quantity for electrical distribution system is the sum of all the electrical distribution systems.	The electrical distribution system may include the following subcomponents: Switchgear, Unit Substations, Switchboard, Motor Control Centers, Starters, Transformers, Transfer Switches, Panelboards, Conduits and Raceways, and Electrical Outlets/Receptacles. For this element, a separate electrical distribution system is considered to be one system. Tunnels with twin bores may have separate electrical distribution systems and would be considered as two.

Condition State Definitions

Defect	Condition State 1	Condition State 2	Condition State 3	Condition State 4
System Condition	The system is in good condition – no notable distress.	The system is in fair condition – isolated breakdowns or deterioration.	The system is in poor condition – widespread deterioration or breakdowns reducing operational capacity, without impacting the serviceability of the element or tunnel.	The condition warrants evaluation to determine the effect on serviceability of the element or tunnel or the evaluation has determined there is an impact on the serviceability of the element or tunnel.

Emergency Distribution System	
Unit of Measure Each	Element Number 10550
Specification	Commentary
Record this element for all emergency distribution systems. This system consists of the electrical equipment, wiring, conduit, and cable used for providing electrical power in case of utility service failure. Equipment included in this system consists of emergency generators and/or uninterruptible power supply (UPS) systems, transfer switches, and other equipment supplying emergency power. The total quantity for emergency distribution system is the sum of all the emergency distribution systems.	The emergency distribution system may include the following subcomponents: Uninterruptable Power Supply (UPS), batteries and battery charging equipment. For this element, a separate emergency distribution system is considered to be one system. Tunnels with twin bores may have separate emergency distribution systems and would be considered as two.

Condition State Definitions

Defect	Condition State 1	Condition State 2	Condition State 3	Condition State 4
System Condition	The system is in good condition – no notable distress.	The system is in fair condition – isolated breakdowns or deterioration.	The system is in poor condition – widespread deterioration or breakdowns reducing operational capacity, without impacting the serviceability of the element or tunnel.	The condition warrants evaluation to determine the effect on serviceability of the element or tunnel or the evaluation has determined there is an impact on the serviceability of the element or tunnel.

Tunnel Lighting System	
Unit of Measure Each	Element Number 10600
Specification	Commentary
Record this element for all tunnel lighting systems. These systems consist of the light fixtures, supports, bulb housings, lenses, light switches, junction boxes, wiring, conduit, cable, sensors, and controllers used to provide lighting for the tunnel. The total quantity for tunnel lighting system is the sum of all the tunnel lighting systems.	The tunnel lighting system may also include the following subcomponents: photo controls, and remote ballasts. For this element, a separate tunnel lighting system is considered to be one system. Tunnels with twin bores may have separate tunnel lighting systems and would be considered as two.

Condition State Definitions

Defect	Condition State 1	Condition State 2	Condition State 3	Condition State 4
System Condition	The system is in good condition – no notable distress.	The system is in fair condition – isolated breakdowns or deterioration.	The system is in poor condition – widespread deterioration or breakdowns reducing operational capacity, without impacting the serviceability of the element or tunnel.	The condition warrants evaluation to determine the effect on serviceability of the element or tunnel or the evaluation has determined there is an impact on the serviceability of the element or tunnel.

Tunnel Lighting Fixture	
Unit of Measure Each	Element Number 10601
Specification	Commentary
Record this element for all tunnel lighting fixtures. This element includes the physical housing of the tunnel lights and their connections to the tunnel. The total quantity for tunnel lighting fixture is the sum of all the tunnel lighting fixtures.	Component supports include anchorage to the supporting member and connecting hardware for the component housing. When a lighting fixture serves the dual purpose of general tunnel lighting and emergency tunnel lighting, it is only counted under the tunnel lighting fixture element. However, those fixtures will have an impact on both tunnel lighting system and emergency lighting system elements.

Condition State Definitions

Defect	Condition State 1	Condition State 2	Condition State 3	Condition State 4
Component Supports	No deficient support conditions.	Loose anchorage or component housing connection hardware.	Missing anchorage or component housing connection hardware which does not result in an unstable situation.	Failed anchorage or component connection hardware which results in an unstable situation.
Corrosion	None	Freckled rust. Corrosion of the steel has initiated.	Section loss is evident or pack rust is present but does not warrant structural review.	The condition warrants a structural review to determine the effect on strength or serviceability of the element or tunnel, OR a structural review has been completed and the defects impact strength and serviceability of the element or tunnel.
Component Housing or Enclosure	No damages.	Single Crack.	Multiple Cracks.	Holes are present.

Emergency Lighting System	
Unit of Measure Each	Element Number 10620
Specification	Commentary
Record this element for all emergency lighting systems. These systems consist of the light fixtures, supports, bulb housings, lenses, light switches, junction boxes, wiring, conduit, cable, sensors, and controllers used to provide emergency lighting for the facility The total quantity for emergency lighting system is the sum of all the emergency lighting systems.	The emergency lighting system may also include the following subcomponents: exit signs, batteries; and support space sighting, and remote ballasts. For this element, a separate emergency lighting system is considered to be one system. Tunnels with twin bores may have separate emergency lighting systems and would be considered as two.

Condition State Definitions

Defect	Condition State 1	Condition State 2	Condition State 3	Condition State 4
System Condition	The system is in good condition – no notable distress.	The system is in fair condition – isolated breakdowns or deterioration.	The system is in poor condition – widespread deterioration or breakdowns reducing operational capacity, without impacting the serviceability of the element or tunnel.	The condition warrants evaluation to determine the effect on serviceability of the element or tunnel or the evaluation has determined there is an impact on the serviceability of the element or tunnel.

Emergency Lighting Fixture	
Unit of Measure Each	Element Number 10621
Specification	Commentary
Record this element for all emergency lighting fixtures. This element includes the physical housing of the emergency lights and their connections to the tunnel. The total quantity for emergency lighting fixture is the sum of all the emergency lighting fixtures.	Component supports include anchorage to the supporting member and connecting hardware for the component housing. When a lighting fixture serves the dual purpose of general tunnel lighting and emergency tunnel lighting, it is only counted under the tunnel lighting fixture element. However, those fixtures will have an impact on both tunnel lighting system and emergency lighting system elements.

Condition State Definitions

Defect	Condition State 1	Condition State 2	Condition State 3	Condition State 4
Component Supports	No deficient support conditions.	Loose anchorage or component housing connection hardware.	Missing anchorage or component housing connection hardware which does not result in an unstable situation.	Failed anchorage or component connection hardware which results in an unstable situation.
Corrosion	None	Freckled rust. Corrosion of the steel has initiated.	Section loss is evident or pack rust is present but does not warrant structural review.	The condition warrants a structural review to determine the effect on strength or serviceability of the element or tunnel, OR a structural review has been completed and the defects impact strength and serviceability of the element or tunnel.
Component Housing or Enclosure	No damages.	Single Crack.	Multiple Cracks.	Holes are present.

3.6—Fire/Life Safety/Security Systems Section

This section defines tunnel fire/life safety/security systems elements and the methodology for determining total element quantities and condition state quantities. The following elements are included.

Element Type	Element #	Element Name	Unit of Measure
Fire Detection	10650	Fire Detection System	each
Fire Protection	10700	Fire Protection System	each
Emergency Communications	10750	Emergency Communications System	each
Operations and Security	10800	Tunnel Operations and Security System	each

Fire Detection System	
Unit of Measure Each	Element Number 10650
Specification	Commentary
Record this element for all fire detection systems. These systems consist of control panels, initiating devices (heat and smoke detectors, pull-stations, etc.), notification appliances (strobes, horns, etc.), wiring, conduit, and cable used to detect a fire in the tunnel. The total quantity for fire detection system is the sum of all the fire detection systems.	The fire detection system may also include the following subcomponents: sensors, controls, and alarms. For this element, a separate fire detection system is considered to be one system. Tunnels with twin bores may have separate fire detection systems and would be considered as two.

Condition State Definitions

Defect	Condition State 1	Condition State 2	Condition State 3	Condition State 4
System Condition	The system is in good condition – no notable distress.	The system is in fair condition – isolated breakdowns or deterioration.	The system is in poor condition – widespread deterioration or breakdowns reducing operational capacity, without impacting the serviceability of the element or tunnel.	The condition warrants evaluation to determine the effect on serviceability of the element or tunnel or the evaluation has determined there is an impact on the serviceability of the element or tunnel.
Detection Sensor Operations (heat and smoke detectors)	All detection sensors are operational.		Detection sensors are not operational in one zone.	Detection sensors are not operational in multiple zones.

Fire Protection System	
Unit of Measure Each	Element Number 10700
Specification	Commentary
Record this element for all fire protection systems. These systems consist of fire extinguishers, hose connections, storage tanks, fire hydrants, building sprinklers, pumping systems, piping, circulating pumps, and hose reels used as fire protection in the tunnel. The total quantity for fire protection system is the sum of all the fire protection systems.	The fire protection system may include the following subcomponents: main fire pump, pressure maintenance/jockey pump, dry pipe valve, valves and tamper switches, storage tanks, tunnel stand pipe, pressure relief and air release valves, backflow prevention, hose stations, hose reels, building sprinklers, fire department connections and fire hydrants. For this element, a separate fire protection system is considered to be one system. Tunnels with twin bores may have separate fire protection systems and would be considered as two.

Condition State Definitions

Defect	Condition State 1	Condition State 2	Condition State 3	Condition State 4
System Condition	The system is in good condition – no notable distress.	The system is in fair condition – isolated breakdowns or deterioration.	The system is in poor condition – widespread deterioration or breakdowns reducing operational capacity, without impacting the serviceability of the element or tunnel.	The condition warrants evaluation to determine the effect on serviceability of the element or tunnel or the evaluation has determined there is an impact on the serviceability of the element or tunnel.

Emergency Communication System	
Unit of Measure Each	Element Number 10750
Specification	Commentary
Record this element for all emergency communication systems. The components of the emergency communication system include the communication device itself (i.e. intercom, radios, cell-phone), receivers, wiring, exchange devices, etc. The total quantity for emergency communication system is the sum of all the emergency communication systems.	The emergency communications system may also include the following subcomponents: signs, controllers, speakers and audio input equipment. For this element, a separate emergency communication system is considered to be one system. Tunnels with twin bores may have separate emergency communication systems and would be considered as two.

Condition State Definitions

Defect	Condition State 1	Condition State 2	Condition State 3	Condition State 4
System Condition	The system is in good condition – no notable distress.	The system is in fair condition – isolated breakdowns or deterioration.	The system is in poor condition – widespread deterioration or breakdowns reducing operational capacity, without impacting the serviceability of the element or tunnel.	The condition warrants evaluation to determine the effect on serviceability of the element or tunnel or the evaluation has determined there is an impact on the serviceability of the element or tunnel.

Tunnel Operations and Security System	
Unit of Measure Each	Element Number 10800
Specification	Commentary
Record this element for all tunnel operations and security systems. These systems consist of the communication equipment (CCTV cameras, telephones, radios, etc.) used to provide communication within and from the tunnel. The total quantity for tunnel operations and security system is the sum of all the tunnel operations and security systems.	The tunnel operations and security system may also include the following subcomponents: closed-circuit camera system, cell phone antennas, door access, controller and radio. For this element, a separate tunnel operation and security system is considered to be one system. Tunnels with twin bores may have separate tunnel operations and security systems and would be considered as two.

Condition State Definitions

Defect	Condition State 1	Condition State 2	Condition State 3	Condition State 4
System Condition	The system is in good condition – no notable distress.	The system is in fair condition – isolated breakdowns or deterioration.	The system is in poor condition – widespread deterioration or breakdowns reducing operational capacity, without impacting the serviceability of the element or tunnel.	The condition warrants evaluation to determine the effect on serviceability of the element or tunnel or the evaluation has determined there is an impact on the serviceability of the element or tunnel.

3.7—Signs Section

This section defines tunnel sign elements and the methodology for determining total element quantities and condition state quantities. The following elements are included.

Element Type	Element #	Element Name	Unit of Measure
Traffic Guidance	10850	Traffic Sign	each
Egress Signs	10870	Egress Sign	each
Variable Message Boards	10890	Variable Message Board	each
Lane Signal	10910	Lane Signal	each
	10911	Lane Signal Fixture	each

Traffic Sign	
Unit of Measure Each	Element Number 10850
Specification	Commentary
Record this element for all traffic signs. These elements consist of the traffic sign and supports. Signs for pedestrians, variable message signs and lane signals are not covered under this element. The total quantity for traffic signs is the sum of all the traffic signs.	The MUTCD Chapter 2 contains the requirements for the shape and wording of regulatory, warning and guide signs on a highway or road. It also contains requirements for maintaining minimum retroreflectivity of signs.

Condition State Definitions

Defect	Condition State 1	Condition State 2	Condition State 3	Condition State 4
Component Supports	No deficient support conditions.	Loose anchorage or component housing connection hardware.	Missing anchorage or component housing connection hardware which does not result in an unstable situation.	Failed anchorage or component connection hardware which results in an unstable situation.

Egress Sign	
Unit of Measure Each	Element Number 10870
Specification	Commentary
Record this element for all egress signs. This element consists of egress signs and their supports that are not related to the emergency lighting system. The total quantity for egress sign is the sum of all the egress signs.	The MUTCD Chapter 2 contains the requirements for the shape and wording of regulatory, warning and guide signs on a highway or road. It also contains requirements for maintaining minimum retroreflectivity of signs.

Condition State Definitions

Defect	Condition State 1	Condition State 2	Condition State 3	Condition State 4
Component Supports	No deficient support conditions.	Loose anchorage or component housing connection hardware.	Missing anchorage or component housing connection hardware which does not result in an unstable situation.	Failed anchorage or component connection hardware which results in an unstable situation.

Variable Message Board	
Unit of Measure Each	Element Number 10890
Specification	Commentary
Record this element for all variable message boards. This element consists of the variable message board, supports and associated electrical connections. The total quantity for variable message board is the sum of all the variable message boards.	The MUTCD Chapter 2 contains the requirements for the shape and wording of regulatory, warning and guide signs on a highway or road. It also contains requirements for maintaining minimum retroreflectivity of signs.

Condition State Definitions

Defect	Condition State 1	Condition State 2	Condition State 3	Condition State 4
Component Supports	No deficient support conditions.	Loose anchorage or component housing connection hardware.	Missing anchorage or component housing connection hardware which does not result in an unstable situation.	Failed anchorage or component connection hardware which results in an unstable situation.
Sign Operation	Sign is functional and operates when tested.	Sign operates with minor decrease in light output, flicker, or reduced display area.	Sign operates with significant decrease in light output, flicker, and/or reduced display area.	Sign is not operational.

Lane Signal	
Unit of Measure Each	Element Number 10910
Specification	Commentary
Record this element for all lane signals. The components of the tunnel lane signal system include the lane signals themselves, their supports and the control system. The total quantity for lane signal is the sum of all the lane signals.	The lane signals may include the following subcomponents: signals/fixtures, control station, control cabinets and conduit. The MUTCD Chapter 2 contains the requirements for the shape and wording of regulatory, warning and guide signs on a highway or road. It also contains requirements for maintaining minimum retroreflectivity of signs.

Condition State Definitions

Defect	Condition State 1	Condition State 2	Condition State 3	Condition State 4
Component Supports	No deficient support conditions.	Loose anchorage or component housing connection hardware.	Missing anchorage or component housing connection hardware which does not result in an unstable situation.	Failed anchorage or component connection hardware which results in an unstable situation.
Sign Operation	Sign is functional and operates when tested.	Sign operates with minor decrease in light output, flicker, or reduced display area.	Sign operates with significant decrease in light output, flicker, and/or reduced display area.	Sign is not operational.

Lane Signal Fixture	
Unit of Measure Each	Element Number 10911
Specification	Commentary
Record this element for all lane signal fixtures. The components of the tunnel lane signal fixtures include the fixtures themselves, the supports and the wiring. The total quantity for lane signal fixture is the sum of all the lane signal fixtures.	The lane signal fixtures may also include the following subcomponents: fixtures and conduit. The MUTCD Chapter 2 contains the requirements for the shape and wording of regulatory, warning and guide signs on a highway or road. It also contains requirements for maintaining minimum retroreflectivity of signs.

Condition State Definitions

Defect	Condition State 1	Condition State 2	Condition State 3	Condition State 4
Component Supports	No deficient support conditions.	Loose anchorage or component housing connection hardware.	Missing anchorage or component housing connection hardware which does not result in an unstable situation.	Failed anchorage or component connection hardware which results in an unstable situation.
Corrosion	None	Freckled rust. Corrosion of the steel has initiated.	Section loss is evident or pack rust is present but does not warrant structural review.	The condition warrants a structural review to determine the effect on strength or serviceability of the element or tunnel, OR a structural review has been completed and the defects impact strength and serviceability of the element or tunnel.
Component Housing or Enclosure	No damages.	Single Crack.	Multiple Cracks.	Holes are present.

3.8—Protective Systems Section

This section defines tunnel protective system elements and the methodology for determining total element quantities and condition state quantities. The following elements are included.

Element Type	Element #	Element Name	Unit of Measure
Protective Coating	10950	Steel Corrosion Protective Coating	area, ft^2
	10951	Concrete Corrosion Protective Coating	area, ft^2
	10952	Fire Protective Coating	area, ft^2

Steel Corrosion Protective Coating	
Unit of Measure Area (ft²)	Element Number 10950
Specification	Commentary
Record this element for all steel corrosion protective coating used in the tunnel. The element is for steel elements that have a protective coating system such as paint, galvanization, or other top coat steel corrosion inhibitor. The total quantity for protective coatings is the product of the length and width of the entire exposed surface of the element.	Effectiveness is an evaluation made by the inspector to classify the degree to which the protection system is functioning to protect the steel beneath. Protective coatings only apply to those elements listed under the structural and civil sections.

Condition State Definitions

Defect	Condition State 1	Condition State 2	Condition State 3	Condition State 4
Chalking	None	Surface dulling.	Loss of pigment.	Not applicable.
Peeling/Bubbling/ Cracking	None	Finish coats only.	Finish and primer coats.	Exposure of bare metal.
Oxide Film Degradation Color/ Texture Adherence	Yellow-orange or light brown for early development. Chocolate-brown to purple-brown for fully developed. Tightly adhered, capable of withstanding hammering or vigorous wire brushing.	Granular texture.	Small flakes, less than ½ in. diameter.	Dark black color. Large flakes, ½ in. diameter or greater; or laminar sheets or nodules.
Effectiveness	Fully effective.	Substantially effective.	Limited effectiveness.	Failed, no protection of the underlying metal.

Concrete Corrosion Protective Coating	
Unit of Measure Area (ft²)	Element Number 10951
Specification	Commentary
Record this element for all concrete corrosion protective coating used in the tunnel. This element is for concrete elements that have a protective coating applied to them. These coatings include silane/siloxane water proofers, crack sealers such as High Molecular Weight Methacrylate (HMWM), or any top coat barrier that protects concrete from deterioration and reinforcing steel from corrosion. The total quantity for protective coatings is the product of the length and width of the entire exposed surface of the element.	Effectiveness is an evaluation made by the inspector to classify the degree to which the protection system is functioning. Protective coatings only apply to those elements listed under the structural and civil sections.

Condition State Definitions

Defect	Condition State 1	Condition State 2	Condition State 3	Condition State 4
Wear	None	Underlying concrete not exposed, coating is showing wear from UV exposure, friction course missing.	Underlying concrete is not exposed; thickness of the coating is reduced.	Underlying concrete is exposed. Protective coating is no longer effective.
Effectiveness	Fully effective	Substantially effective.	Limited effectiveness.	The protective system has failed or is no longer effective.

Fire Protective Coating	
Unit of Measure Area (ft²)	Element Number 10952
Specification	Commentary
Record this element for all fire protective coatings used in the tunnel. This element is the coating applied on the tunnel elements to protect these elements from fire. The total quantity for protective coatings is the product of the length and width of the entire exposed surface of the element.	Fire protection includes fireproofing spray, etc. Protective coatings only apply to those elements listed under the structural and civil sections.

Condition State Definitions

Defect	Condition State 1	Condition State 2	Condition State 3	Condition State 4
Effectiveness	Fully effective	Substantially effective.	Limited effectiveness.	Failed – no protection of underlying material.

Section 4: Index of Inventory Items and Elements

Inventory Items

Identification Items

Item ID	Inventory Item Name
I.1	Tunnel Number
I.2	Tunnel Name
I.3	State Code
I.4	County Code
I.5	Place Code
I.6	Highway Agency District
I.7	Route Number
I.8	Route Direction
I.9	Route Type
I.10	Facility Carried
I.11	LRS Route ID
I.12	LRS Mile Point
I.13	Tunnel Portal's Latitude
I.14	Tunnel Portal's Longitude
I.15	Border Tunnel State or Country Code
I.16	Border Tunnel Financial Responsibility
I.17	Border Tunnel Number
I.18	Border Tunnel Inspection Responsibility

Age and Service Items

Item ID	Inventory Item Name
A.1	Year Built
A.2	Year Rehabilitated
A.3	Total Number of Lanes
A.4	Average Daily Traffic
A.5	Average Daily Truck Traffic
A.6	Year of Average Daily Traffic
A.7	Detour Length
A.8	Service in Tunnel

Classification Items

Item ID	Inventory Item Name
C.1	Owner
C.2	Operator
C.3	Direction of Traffic
C.4	Toll
C.5	NHS Designation
C.6	STRAHNET Designation
C.7	Functional Classification
C.8	Urban Code

Geometric Data Items

Item ID	Inventory Item Name
G.1	Tunnel Length
G.2	Minimum Vertical Clearance over Tunnel Roadway
G.3	Roadway Width, Curb-to-Curb
G.4	Left Sidewalk Width
G.5	Right Sidewalk Width

Inspection items

Item ID	Inventory Item Name
D.1	Routine Inspection Target Date
D.2	Actual Routine Inspection Date
D.3	Routine Inspection Interval
D.4	In-Depth Inspection
D.5	Damage Inspection
D.6	Special Inspection

Load Rating and Posting Items

Item ID	Inventory Item Name
L.1	Load Rating Method
L.2	Inventory Load Rating Factor
L.3	Operating Load Rating Factor
L.4	Tunnel Load Posting Status
L.5	Posting Load – Gross
L.6	Posting Load – Axle
L.7	Posting Load – Type 3
L.8	Posting Load – Type 3S2
L.9	Posting Load – Type 3-3
L.10	Height Restriction
L.11	Hazardous Material Restriction
L.12	Other Restrictions

Navigation Items

Item ID	Inventory Item Name
N.1	Under Navigable Waterway
N.2	Navigable Waterway Clearance
N.3	Tunnel or Portal Island Protection from Navigation

Structure Type and Material Items

Item ID	Inventory Item Name
S.1	Number of Bores
S.2	Tunnel Shape
S.3	Portal Shapes
S.4	Ground Conditions
S.5	Complex

Elements

Structural Section

Element Type	Element #	Element Name	Unit of Measure
Liners	10000	Steel Tunnel Liner	area, ft^2
	10001	Cast-in-Place Concrete Tunnel Liner	area, ft^2
	10002	Precast Concrete Tunnel Liner	area, ft^2
	10003	Shotcrete Tunnel Liner	area, ft^2
	10004	Timber Tunnel Liner	area, ft^2
	10005	Masonry Tunnel Liner	area, ft^2
	10006	Unlined Rock Tunnel	area, ft^2
	10007	Rock Bolt/Dowel	each
	10009	Other Tunnel Liner	area, ft^2
Tunnel Roof Girders	10010	Steel Tunnel Roof Girders	length, ft
	10011	Concrete Tunnel Roof Girders	length, ft
	10012	Prestressed Concrete Tunnel Roof Girders	length, ft
	10019	Other Tunnel Roof Girders	length, ft
Columns/ Piles	10020	Steel Columns/Piles	each
	10021	Concrete Columns/Piles	each
	10029	Other Columns/Piles	each
Cross Passageway	10030	Steel Cross Passageway	length, ft
	10031	Concrete Cross Passageway	length, ft
	10033	Shotcrete Cross Passageway	length, ft
	10034	Timber Cross Passageway	length, ft
	10035	Masonry Cross Passageway	length, ft
	10036	Unlined Rock Cross Passageway	length, ft
	10039	Other Cross Passageway	length, ft
Interior Walls	10041	Concrete Interior Walls	area, ft^2
	10049	Other Interior Walls	area, ft^2
Portal	10051	Concrete Portal	area, ft^2
	10055	Masonry Portal	area, ft^2
	10059	Other Portal	area, ft^2
Ceiling Slab	10061	Concrete Ceiling Slab	area, ft^2
	10069	Other Ceiling Slab	area, ft^2
Ceiling Girder	10070	Steel Ceiling Girder	length, ft
	10071	Concrete Ceiling Girder	length, ft
	10072	Prestressed Concrete Ceiling Girder	length, ft
	10079	Other Ceiling Girder	length, ft

Element Type	Element #	Element Name	Unit of Measure
Hangers and Anchorages	10080	Steel Hangers and Anchorages	each
	10089	Other Hangers and Anchorages	each
Ceiling Panels	10090	Steel Ceiling Panels	area, ft^2
	10091	Concrete Ceiling Panels	area, ft^2
	10099	Other Ceiling Panels	area, ft^2
Invert Slab	10101	Concrete Invert Slab	area, ft^2
	10109	Other Invert Slab	area, ft^2
Slab-on-Grade	10111	Concrete Slab-on-Grade	area, ft^2
	10119	Other Slab-on-Grade	area, ft^2
Invert Girder	10120	Steel Invert Girder	length, ft
	10121	Concrete Invert Girder	length, ft
	10122	Prestressed Concrete Invert Girder	length, ft
	10129	Other Invert Girder	length, ft
Joints	10130	Strip Seal Expansion Joint	length, ft
	10131	Pourable Joint Seal	length, ft
	10132	Compression Joint Seal	length, ft
	10133	Assembly Joint With Seal	length, ft
	10134	Open Expansion Joint	length, ft
	10135	Assembly Joint Without Seal	length, ft
	10139	Other Joint	length, ft
Gaskets	10140	Gaskets	length, ft

Civil Section

Element Type	Element #	Element Name	Unit of Measure
Wearing Surface	10151	Concrete Wearing Surface	area, ft^2
	10158	Asphalt Wearing Surface	area, ft^2
	10159	Other Wearing Surface	area, ft^2
Traffic Barrier	10160	Steel Traffic Barrier	length, ft
	10161	Concrete Traffic Barrier	length, ft
	10169	Other Traffic Barrier	length, ft
Pedestrian Railing	10170	Steel Pedestrian Railing	length, ft
	10171	Concrete Pedestrian Railing	length, ft
	10179	Other Pedestrian Railing	length, ft

Mechanical Systems Section

Element Type	Element #	Element Name	Unit of Measure
Ventilation System	10200	Ventilation System	each
	10201	Fans	each
Drainage System	10300	Drainage and Pumping System	each
	10301	Pumps	each
Emergency Generator System	10400	Emergency Generator System	each
Flood Gate	10475	Flood Gate	each

Electrical Systems Section

Element Type	Element #	Element Name	Unit of Measure
Electrical Distribution	10500	Electrical Distribution System	each
Emergency Distribution	10550	Emergency Distribution System	each
Tunnel Lighting	10600	Tunnel Lighting Systems	each
	10601	Tunnel Lighting Fixtures	each
Emergency Lighting	10620	Emergency Lighting Systems	each
	10621	Emergency Lighting Fixtures	each

Fire/Life Safety/Security Systems Section

Element Type	Element #	Element Name	Unit of Measure
Fire Detection	10650	Fire Detection System	each
Fire Protection	10700	Fire Protection System	each
Emergency Communications	10750	Emergency Communications System	each
Operations and Security	10800	Tunnel Operations and Security System	each

Signs Section

Element Type	Element #	Element Name	Unit of Measure
Traffic Guidance	10850	Traffic Sign	each
Egress Signs	10870	Egress Sign	each
Variable Message Boards	10890	Variable Message Board	each
Lane Signal	10910	Lane Signal	each
	10911	Lane Signal Fixture	each

Protective Systems Section

Element Type	Element #	Element Name	Unit of Measure
Protective Coating	10950	Steel Corrosion Protective Coating	area, ft^2
	10951	Concrete Corrosion Protective Coating	area, ft^2
	10952	Fire Protective Coating	area, ft^2

Ceiling Panels	AREA (Feet^2)	10090	10091						10099	
Invert Slab	AREA (Feet^2)		10101						10109	
Slab-on-Grade	AREA (Feet^2)		10111						10119	
Invert Girder	LENGTH (Feet)	10120	10121	10122					10129	

Joints & Gaskets

Element	Units	Element Number
Strip Seal Expansion Joint	LENGTH (Feet)	10130
Pourable Joint Seal	LENGTH (Feet)	10131
Compression Joint Seal	LENGTH (Feet)	10132
Assembly Joint Seal (Modular)	LENGTH (Feet)	10133
Open Expansion Joint	LENGTH (Feet)	10134
Assembly Joint without Seal	LENGTH (Feet)	10135
Other Joint	LENGTH (Feet)	10139
Gaskets	LENGTH (Feet)	10140

Civil Elements

Element	Units	Steel	Concrete	Asphalt	Other
Wearing Surface	AREA (Feet^2)		10151	10158	10159
Traffic Barrier	LENGTH (Feet)	10160	10161		10169
Pedestrian Railing	LENGTH (Feet)	10170	10171		10179

Mechanical System Elements

Elements	Units	Element Number
Ventilation Systems	EACH	10200
Fans	EACH	10201
Drainage and Pumping Systems	EACH	10300
Pumps	EACH	10301
Emergency Generator Systems	EACH	10400
Flood Gate	EACH	10475

Fire/Life Safety/Security System Elements

Elements	Units	Element Number
Fire Detection Systems	EACH	10650
Fire Protection Systems	EACH	10700
Emergency Communications Systems	EACH	10750
Tunnel Operations and Security Systems	EACH	10800

Protective Systems Elements

Elements	Units	Element Number
Steel Corrosion Protective Coating	AREA (Feet^2)	10950
Concrete Corrosion Protective Coating	AREA (Feet^2)	10951
Fire Protective Coating	AREA (Feet^2)	10952

Electrical System Elements

Elements	Units	Element Number
Electircal Distribution Systems	EACH	10500
Emergency Distribution Systems	EACH	10550
Tunnel Lighting Systems	EACH	10600
Light Fixtures	EACH	10601
Emergency Lighting Systems	EACH	10620
Emergency Lighting Fixtures	EACH	10621

Sign Elements

Elements	Units	Element Number
Traffic Signs	EACH	10850
Egress Signs	EACH	10870
Variable Message Boards	EACH	10890
Lane Signals	EACH	10910
Lane Signal Fixtures	EACH	10911

(THIS PAGE INTENTIONALLY LEFT BLANK)

Section 5: Tunnel Coding Example

This example demonstrates the evaluation and coding of inspection data for tunnels of varying complexity. The example includes the use of Inventory Items and Element Items.

Arch Cape Tunnel

Introduction

The original Arch Cape Tunnel was constructed in the late 1930s and was timber lined until the late 1990s when a major rehabilitation replaced the timber with a combination of shotcrete and concrete lining. The timber portals were replaced with reinforced concrete structures at the same time. The lighting system and bicycle warning system and signs, and traffic signs were also replaced. At that time, all utilities were removed from their mountings on the tunnel sidewalls and moved to a utility trench in the tunnel concrete invert slab. No major work has been done on the tunnel in the last 12 years.

The 1998 rehabilitation tunnel support and lining system used two completely different systems. The ends of the tunnel received a waterproof membrane with fleece backing and a 2-stage cast- in-place concrete lining to replace the rotted timber sets. Much of the lagging and cordwood was left in place behind the cast-in-place concrete and pressure grouted. The central portion of the tunnel received permanent rock reinforcement and a fiber reinforced shotcrete lining. In this area, except for one localized area described below, all the timber including the lagging and cordwood was removed. With the removal of the lagging and cordwood, some of the surrounding rock mass also fell in. As a result, the rock surface currently covered with shotcrete has some significant overbreak areas. Weep holes were drilled at the wet spots in the shotcrete lining.

Inventory Items

Identification

Item ID	Inventory Name	Code
I.1	Tunnel Number	0224700903568
I.2	Tunnel Name	Arch Cape Tunnel
I.3	State Code	41
I.4	County Code	124
I.5	Place Code	43000
I.6	Highway Agency District	05
I.7	Route Number	00101
I.8	Route Direction	0
I.9	Route Type	3
I.10	Facility Carried	US101
I.11	LRS Route ID	000900100S00
I.12	LRS Mile Point	89
I.13	Tunnel Portal’s Latitude	45.475886
I.14	Tunnel Portal’s Longitude	12.3575887
I.15	Border Tunnel State or Country Code	(blank)
I.16	Border Tunnel Financial Responsibility	(blank)
I.17	Border Tunnel Number	(blank)
I.18	Border Tunnel Inspection Responsibility	(blank)

Age and Service

Item ID	Inventory Name	Code
A.1	Year Built	1937
A.2	Year Rehabilitated	1998
A.3	Total Number of Lanes	2
A.4	Average Daily Traffic	5000
A.5	Average Daily Truck Traffic	500
A.6	Year of Average Daily Traffic	2010
A.7	Detour Length	28
A.8	Service in Tunnel	3

Classification

Item ID	Inventory Name	Code
C.1	Owner	01
C.2	Operator	01
C.3	Direction of Traffic	2
C.4	Toll	0
C.5	NHS Designation	1
C.6	STRAHNET Designation	1
C.7	Functional Classification	2
C.8	Urban Code	99999

Geometric Data

Item ID	Inventory Name	Code
G.1	Tunnel Length	2250
G.2	Minimum Vertical Clearance over Tunnel Roadway	14.2
G.3	Roadway Width, Curb-to-Curb	24.0
G.4	Left Sidewalk Width	3.5
G.5	Right Sidewalk Width	3.5

Inspection

Item ID	Inventory Name	Code
D.1	Routine Inspection Target Date	08012000
D.2	Actual Routine Inspection Date	08012012
D.3	Routine Inspection Interval	24
D.4	In-Depth Inspection	1
D.5	Damage Inspection	0
D.6	Special Inspection	0

Load Rating and Posting

Item ID	Inventory Name	Code
L.1	Load Rating Method	N
L.2	Inventory Load Rating Factor	(blank)
L.3	Operating Load Rating Factor	(blank)
L.4	Tunnel Load Posting Status	A
L.5	Posting Load – Gross	(blank)
L.6	Posting Load – Axle	(blank)
L.7	Posting Load – Type 3	(blank)
L.8	Posting Load – Type 3S2	(blank)
L.9	Posting Load – Type 3-3	(blank)
L.10	Height Restriction	0
L.11	Hazardous Material Restriction	0
L.12	Other Restrictions	0

Navigation

Item ID	Inventory Name	Code
N.1	Under Navigable Waterway	0
N.2	Navigable Waterway Clearance	00.0
N.3	Tunnel or Portal Island Protection from Navigation	0

Structure Type and Material

Item ID	Inventory Name	Code
S.1	Number of Bores	1
S.2	Tunnel Shape	2
S.3	Portal Shapes	2
S.4	Ground Conditions	3
S.5	Complex	0

Element Identification

Based on the review of the as-built plans (not included in this example) and field observations, the following tunnel elements have been identified for reporting to the FHWA.

Element Number	Element Name	Tunnel Description
10001	Cast-in-Place Concrete Tunnel Liner	The tunnel ends have a cast-in-place concrete liner
10003	Shotcrete Tunnel Liner	The tunnel interior has a fiber reinforced shotcrete lining
10051	Concrete Portal	The tunnel has a cast-in-place concrete portal at each end
10111	Concrete Slab-on-Grade	The tunnel has a cast-in-place concrete slab on grade
10600	Tunnel Lighting Systems	The tunnel has a lighting system
10601	Tunnel Lighting Fixtures	The tunnel has light fixtures
10850	Traffic Sign	The tunnels has 2 traffic signs at each end

Element Quantities

The following quantities calculations are based on a review of the as-built plans (not included in this example) and verified through field measurements and observations. The total element quantity is calculated by summing the unit of the particular element. The total quantity is recorded for each element.

Element Number	Element Name	Unit of Measure and *Specification*	Calculation	Quantity
10001	Cast-in-Place Concrete Tunnel Liner	Area (Feet²): *The area of a tunnel liner is the product of the length (along the centerline) of the tunnel and the perimeter of the liner.*	Length = 400 feet Perimeter = 45 feet Area = 400 ft x 45 ft = 18000 ft²	18000 Feet²
10003	Shotcrete Tunnel Liner	Area (Feet²): *The area of a tunnel liner is the product of the length (along the centerline) of the tunnel and the perimeter of the liner.*	Length = 1850 feet Perimeter = 45 feet Area = 1850 ft x 45 ft = 83250 ft²	83250 Feet²
10051	Concrete Portal	Area (Feet²): *The area of the portal is the product of the width and height of the portal minus the area of the roadway opening. The area may include wingwalls which retain soil and rock near the portal but does not include walls leading up to the portal.*	Portal = 400 ft² Wingwalls = 700 ft² Area = 400 ft² + 700 ft² = 1100 ft²	1100 Feet²
10111	Concrete Slab-on-Grade	Area (Feet²): *The area of the slab-on-grade is the product of the width and length of the.*	Width = 24 feet Length = 2250 feet Area = 24 ft x 2250 ft = 54000 ft²	54000 Feet²
10600	Tunnel Lighting Systems	Each: *The total quantity for tunnel lighting system is the sum of all the tunnel lighting systems.*	1 Tunnel Lighting System	1 Each
10601	Tunnel Lighting Fixtures	Each: *The total quantity for tunnel lighting fixture is the sum of all the tunnel lighting fixtures.*	560 Tunnel Lighting Fixtures	560 Each
10850	Traffic Sign	Each: *The total quantity for traffic signs is the sum of all the traffic signs.*	4 Traffic Signs	4 Each

Element Condition States

The following condition state codes are based on visual assessments and supplemented with non-destructive or destructive testing as appropriate. The Condition State per unit of the element is assessed for each element. Quantities are assigned to the worst applicable condition state determined over the unit assessed. The quantities are summed and recorded for each condition state.

Element Number	Element Name	Quantity
10001	Cast-in-Place Concrete Tunnel Liner	18000 Feet²

Inspection Results

A visual assessment of the cast-in-place concrete tunnel liner was performed. The inspector identified and documented the location of leakage and cracking in the liner. The inspector identified and documented cracking, distortion, leakage in the tunnel liner. No delaminations, spalls, patched areas, or efflorescence was present in the liner.

Condition State Defect Assessment

Defect	Condition State 1	Condition State 2	Condition State 3	Condition State 4
Delamination/ Spall/ Patched area	6900 Feet²	0 Feet²	0 Feet²	0 Feet²
Exposed Rebar	0 Feet²	0 Feet²	0 Feet²	
Efflorescence/ Rust Staining	0 Feet²	0 Feet²	0 Feet²	
Cracking	4000 Feet²	100 Feet²	0 Feet²	
Distortion	0 Feet²	3000 Feet²	0 Feet²	
Leakage	3000 Feet²	1000 Feet²	0 Feet²	

Condition State Quantities

Condition State 1	Condition State 2	Condition State 3	Condition State 4
13900 Feet²	4100 Feet²	0 Feet²	0 Feet²

Element Number	Element Name	Quantity
10003	Shotcrete Tunnel Liner	83250 Feet²

Inspection Results

A visual assessment of the shotcrete tunnel liner was performed. The inspector identified and documented the location of leakage and cracking in the liner. No delaminations, spalls, patched areas, distortion, or efflorescence was present in the liner.

Condition State Defect Assessment

Defect	Condition State 1	Condition State 2	Condition State 3	Condition State 4
Delamination/ Spall/ Patched area	71150 Feet²	0 Feet²	0 Feet²	0 Feet²
Exposed Rebar	0 Feet²	0 Feet²	0 Feet²	
Efflorescence/ Rust Staining	0 Feet²	0 Feet²	0 Feet²	
Cracking	2000 Feet²	1000 Feet²	0 Feet²	
Distortion	0 Feet²	0 Feet²	0 Feet²	
Leakage	4000 Feet²	5000 Feet²	100 Feet²	

Condition State Quantities

Condition State 1	Condition State 2	Condition State 3	Condition State 4
77150 Feet²	6000 Feet²	100 Feet²	0 Feet²

Element Number	Element Name	Quantity
10051	Concrete Portal	1100 Feet²

Inspection Results

A visual inspection was performed on the concrete slab-on-grade. The inspection results are as follows: South Portal east wingwall has single crack which is 4 feet and length and 0.125 inches wide. No other defects were noted.

Condition State Defect Assessment

Defect	Condition State 1	Condition State 2	Condition State 3	Condition State 4
Delamination/ Spall/ Patched area	1090 Feet²	0 Feet²	0 Feet²	0 Feet²
Exposed Rebar	0 Feet²	0 Feet²	0 Feet²	
Efflorescence/ Rust Staining	0 Feet²	0 Feet²	0 Feet²	
Cracking	0 Feet²	0 Feet²	10 Feet²	
Settlement	0 Feet²	0 Feet²	0 Feet²	

Condition State Quantities

Condition State 1	Condition State 2	Condition State 3	Condition State 4
1090 Feet²	0 Feet²	10 Feet²	0 Feet²

Element Number	Element Name	Quantity
10111	Concrete Slab-on-Grade	54000 Feet²

Inspection Results

A visual inspection was performed on the concrete slab-on-grade. The inspection results are as follows: Damage to utility trench paving patch which is located in the SB lane near the south portal. The patch is 5 feet by 2 feet in dimension (10 Feet²). There is 3 inches of settlement and a void up to 7 inches below the patch. No other defects were noted.

Condition Defect Assessment

Defect	Condition State 1	Condition State 2	Condition State 3	Condition State 4
Delamination/ Spall/ Patched area	53490 Feet²	0 Feet²	0 Feet²	0 Feet²
Exposed Rebar	0 Feet²	0 Feet²	0 Feet²	
Cracking	0 Feet²	0 Feet²	0 Feet²	
Settlement	0 Feet²	0 Feet²	10 Feet²	

Condition State Quantities

Condition State 1	Condition State 2	Condition State 3	Condition State 4
53490 Feet²	0 Feet²	10 Feet²	0 Feet²

Element Number	Element Name	Quantity
10600	Tunnel Lighting Systems	1 Each

Inspection Results

The Tunnel Lighting System was inspected and found to be operating at its capacity.

Condition State Defect Assessment

Defect	Condition State 1	Condition State 2	Condition State 3	Condition State 4
System Condition	1 Each	0 Each	0 Each	0 Each

Condition State Quantities

Condition State 1	Condition State 2	Condition State 3	Condition State 4
1 Each	0 Each	0 Each	0 Each

Element Number	Element Name	Quantity
10601	Tunnel Lighting Fixtures	560 Each

Inspection Results

The tunnel lighting fixtures are numbered sequentially starting with Lighting Fixture #1 at the south portal and ending with Lighting Fixture 560 at the north portal.

A visual inspection was performed on the lighting fixtures. The inspection results are as follows:

Housing or Enclosures: There is no damage to the housing or enclosure of Lighting Fixtures 1 through 560.

Component Supports: Lighting Fixtures 61 through 65 exhibit minor loss of mounting hardware. There are no deficient support conditions for all other lighting fixtures.

Component Paint and Corrosion: Lighting Fixtures 61 through 65 exhibit corrosion in excess of 25%. All other lighting fixtures are free from rust and corrosion.

Condition State Defect Assessment

Defect	Condition State 1	Condition State 2	Condition State 3	Condition State 4
Component Supports	555 Each	0 Each	0 Each	0 Each
Corrosion	0 Each	0 Each	5 Each	0 Each
Component Housing or Enclosure	0 Each	0 Each	0 Each	0 Each

Condition State Quantities

Condition State 1	Condition State 2	Condition State 3	Condition State 4
555 Each	0 Each	5 Each	0 Each

Element Number	Element Name	Quantity
10850	Traffic Sign	4 Each

Inspection Results

A visual inspection was performed on the traffic sign supports. No defects in the support conditions were observed.

Condition State Defect Assessment

Defect	Condition State 1	Condition State 2	Condition State 3	Condition State 4
Component Supports	4 Each	0 Each	0 Each	0 Each

Condition State Quantities

Condition State 1	Condition State 2	Condition State 3	Condition State 4
4 Each	0 Each	0 Each	0 Each

Element Quantity and Condition State Summary

The element quantities and condition states described above are summarized as follows:

Element Number	Element Name	Unit	Quantity	Condition State 1	Condition State 2	Condition State 3	Condition State 4
10001	Cast-in-Place Concrete Tunnel Liner	Feet²	18000	13900	4100	0	0
10003	Shotcrete Tunnel Liner	Feet²	83250	77150	6000	100	0
10051	Concrete Portal	Feet²	1100	1090	0	10	0
10111	Concrete Slab-on-Grade	Feet²	54000	53490	0	10	0
10600	Tunnel Lighting Systems	Each	1	1	0	0	0
10601	Tunnel Lighting Fixtures	Each	560	555	0	5	
10850	Traffic Sign	Each	4	4	0	0	0

Section 6: References

AASHTO Manual for Bridge Evaluation, First Edition, 2011

FHWA Tunnel Operations Maintenance, Inspection and Evaluation (TOMIE) Manual

AASHTO Guide Manual for Bridge Element Inspection, First Edition, 2011

Manual for Uniform Traffic Control Devices (MUTCD), 2009 Edition with Revision Numbers 1 and 2 incorporated, dated May 2012

NTSB Number HAR-07/02 Ceiling Collapse in the Interstate 90 Connector Tunnel Boston, Massachusetts July 10, 2006