Prototype Crashworthy Workstation Table Drawings

Description:

Train accident investigations have identified workstation tables as a cause of severe abdominal injuries and fatalities in train accidents. As a result, the FRA has sponsored research to develop a prototype workstation table to minimize the severity of secondary impact injuries that occur during train collisions. Prototype tables were built and dynamically tested using advanced anthropomorphic test devices (ATDs) during a full-scale train-to-train test using cars modified to incorporate crash energy management. A draft APTA standard was developed based on the results of this research effort.

Detailed information about the prototype table design may be useful to companies interested in developing workstation table in accordance with the draft APTA standard for workstation tables. FRA research reports describing the development of the table and the full-scale test results are available at http://www.fra.dot.gov/eLib/details/L01287 (DOT/FRA/ORD-12/06)and http://www.fra.dot.gov/eLib/details/L01533 (DOT/FRA/ORD-09/14), respectively”

Drawing List:

Drawing Number	Title	Page
d0292-0002_1	Crash Table Assembly (pg. 1 of 2)	3
d0292-0002_2	Crash Table Assembly (pg. 2 of 2)	4
d0292-0006	Side Wall, MTG Tube	5
d0292-0008	Strut	6
d0292-0009	Frame Assembly, Crash Table	7
d0292-0010	End Cap, Side Wall MTG Tube	8
d0292-0013	Top Beam Assembly	9
d0292-0016	Lower Beam Assembly	10
d0292-0017	MTG Bracket, Strut	11
d0292-0019	I-Beam Assembly	12
d0292-0022	Top Skin	13
d0292-0023_Rev2	Bottom Skin	14
d0292-0024	I-Beam Plate	15
d0292-0025	I-Beam Web	16
d0292-0026	I-Beam End Cap	17
d0292-0027	Core, Front	18
d0292-0028	Core, Rear	19
d0292-0029	I-Beam Rib	20
d0292-0030	Filler Strip 1	21
d0292-0031	Filler Strip 2	22
d0292-0034	Tube Support	23
d0292-0035	Side Wall Mounting Tube Assembly	24
d0292-0036	Nut Plate Assembly	25
d0292-0037	Lower Mounting Plate	26
d0292-0040	Filler Strip 3	27
d0292-0043	Edge Guard, Side	28
d0292-0044	Edge Guard, Top	29
d0292-0045	Edge Guard, Top	30
d0292-0046	Edge Guard, Top	31

REVISION HISTORY				
ZONE	REV	DESCRIPTION	DATE	APPROVED
	-	INITIAL RELEASE	21-DEC-05	D.M.
	01	REMOVE D0292-0032, 0033, AND 868K523 ADD D0292-0022, 0023, 0030, 0031, 0040 ADD D0292-0041, 0043, 0044, 0045, AND 0046	10-FEB-06	D.M.
	02	ADD NOTE 3, REMOVE PARTS D0292-0041 ADD REFERENCE DIMENSIONS TO SHEET 2		

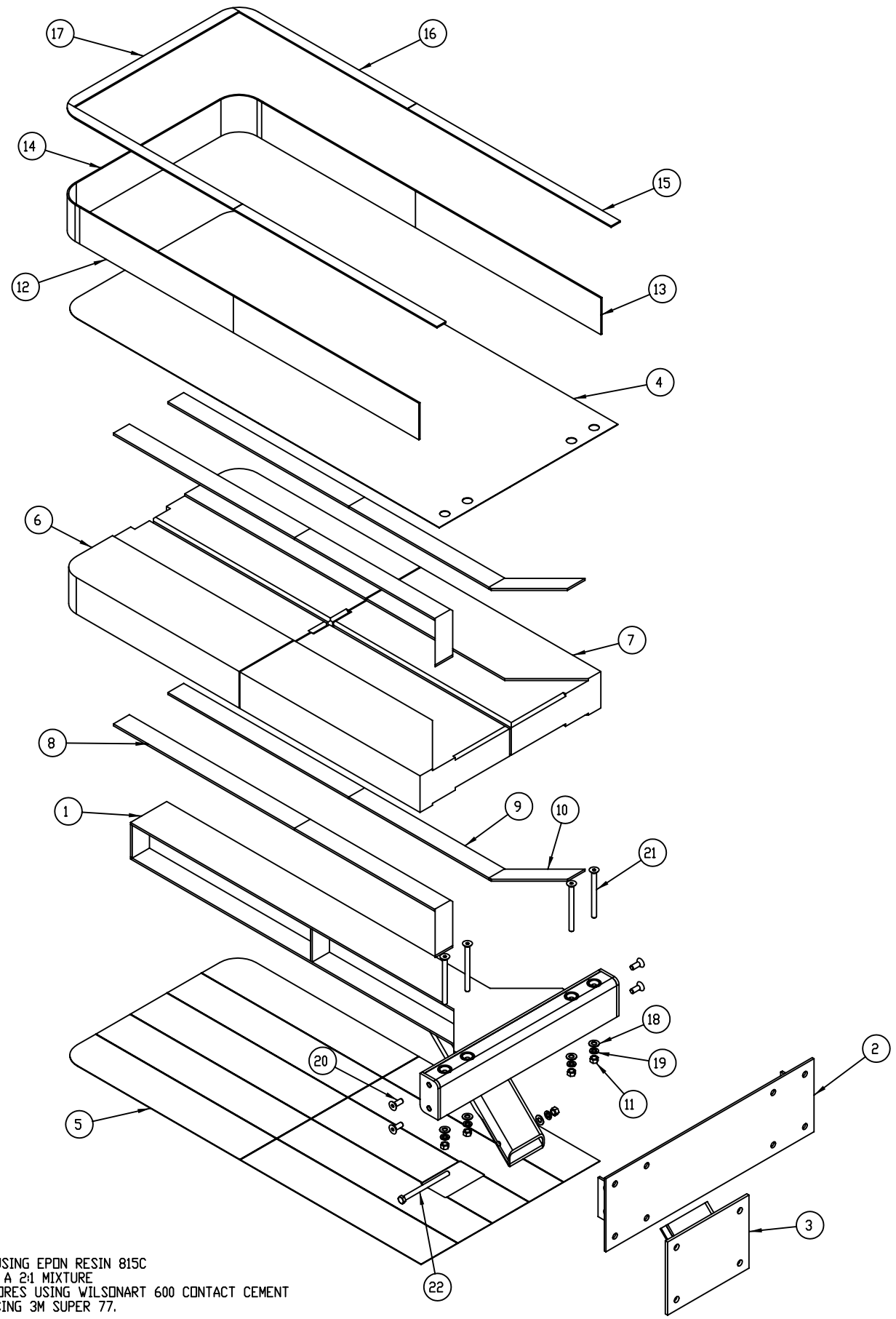

SCALE 3/16

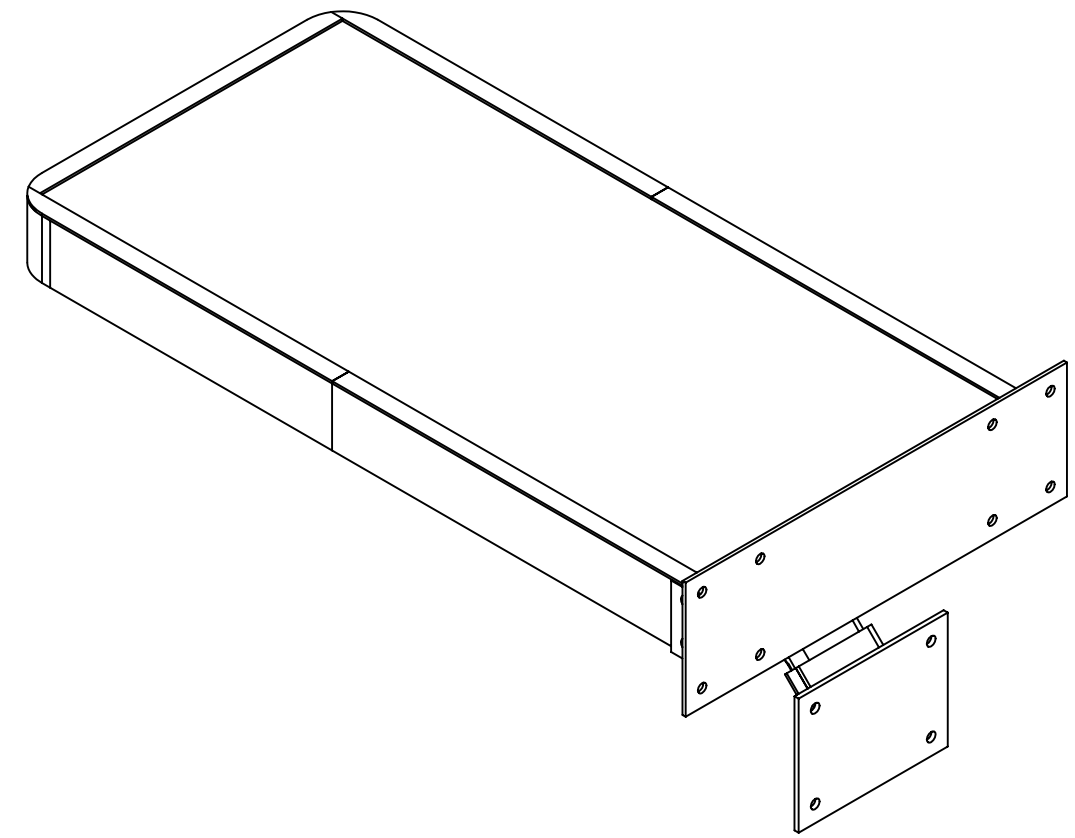

ITEM NO.	QTY REQD	IDENTIFYING NO. OR MILL NAME	NOMENCLATURE OR DESCRIPTION	VENDOR OR MANUFACTURER
22	1	91257A644	3/8-16 x 5.00 HEX BOLT	MCMASTER-CARR
21	4	91253A646	3/8-16 X 4-1/2 SOCKET FLAT HEAD SCREW	MCMASTER-CARR
20	4	91253A624	3/8-16 X 1 SOCKET FLAT HEAD SCREW	MCMASTER-CARR
19	5	91101A231	3/8 LOCK WASHER	MCMASTER-CARR
18	5	91083A031	3/8 FLAT WASHER	MCMASTER-CARR
17	1	D0292-0046	EDGE GUARD, TOP	
16	2	D0292-0045	EDGE GUARD, TOP	
15	2	D0292-0044	EDGE GUARD, TOP	
14	1	D0292-0043-3	EDGE GUARD, SIDE	
13	2	D0292-0043-2	EDGE GUARD, SIDE	
12	2	D0292-0043-1	EDGE GUARD, SIDE	
11	5	90499A031	3/8-16 HEX NUT, GRADE 8	MCMASTER-CARR
10	4	D0292-0040	FILLER STRIP 3	
9	4	D0292-0031	FILLER STRIP 2	
8	4	D0292-0030	FILLER STRIP 1	
7	2	D0292-0028	CORE, REAR	
6	2	D0292-0027	CORE, FRONT	
5	1	D0292-0023	BOTTOM SKIN	
4	1	D0292-0022	TOP SKIN	
3	1	D0292-0016	LOWER BEAM ASSEMBLY	
2	1	D0292-0013	TOP BEAM ASSEMBLY	
1	1	D0292-0009	FRAME ASSEMBLY, CRASH TABLE	

LIST OF PARTS

NOTES:

1. BOND CORES TO FRAME USING EPON RESIN 815C AND EPI-CURE 3282 IN A 2:1 MIXTURE
2. BOND EDGE GUARD TO CORES USING WILSONART 600 CONTACT CEMENT
3. BOND SKIN TO CORES USING 3M SUPER 77.

NEXT ASSY	USED ON	CRASH TABLE	
APPLICATION			

UNLESS OTHERWISE SPECIFIED DIMENSIONS ARE INCHES. TOLERANCES ARE:
DECIMALS .X ± .020 ANGLES ± 1°
.XX ± .010
.XXX ± .005

MATERIAL: SEE LIST OF PARTS

FINISHED SURFACES 63
BREAK SHARP CORNERS .020

THIRD ANGLE PROJECTION

DO NOT SCALE DRAWING

APPROVALS		DATE
DRAWN	D. NEDDER	03-JUN-05
CHECKED		
ENGR		
APPROV	D. MCKEOWN	21-DEC-05
CASE	D0292	

TIAX
CAMBRIDGE, MASSACHUSETTS 02140

CRASH TABLE ASSEMBLY

SIZE	CAGE CODE	DRAWING NO.	REV
D	1YHY2	D0292-0002	02
SCALE 1/4		1 of 2	

COPYRIGHT © TIAX LLC 2006

D0292-0002 02

X6300-GEN-IN-DSIZE-REV0

D0292-0002

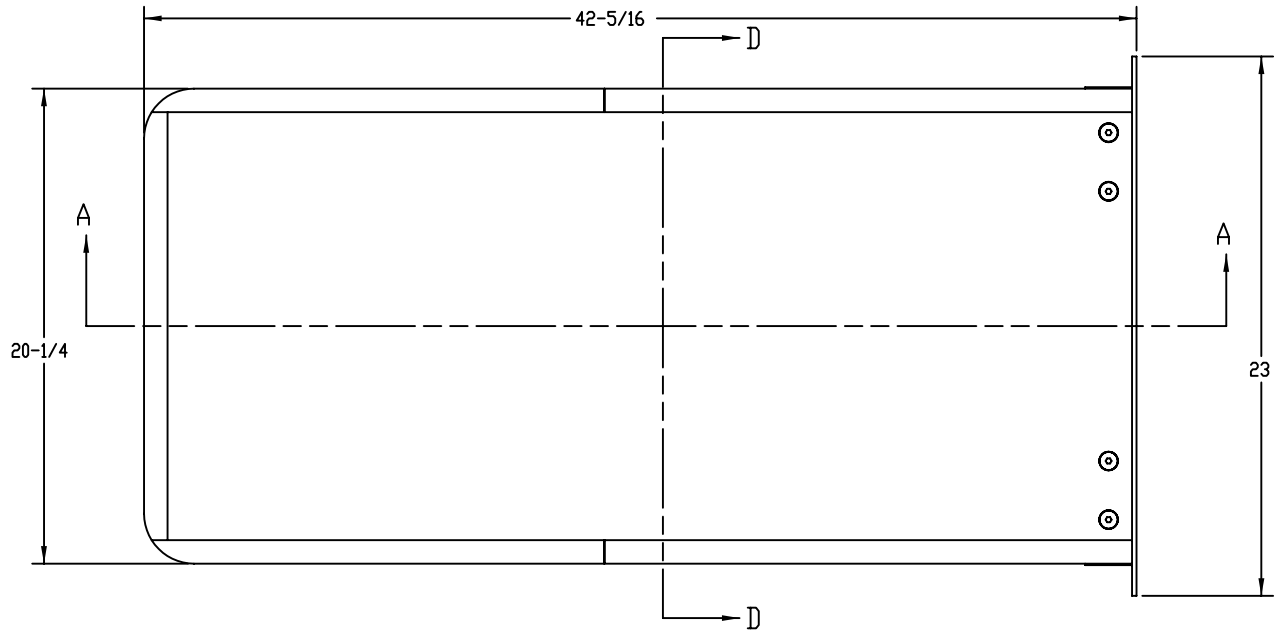

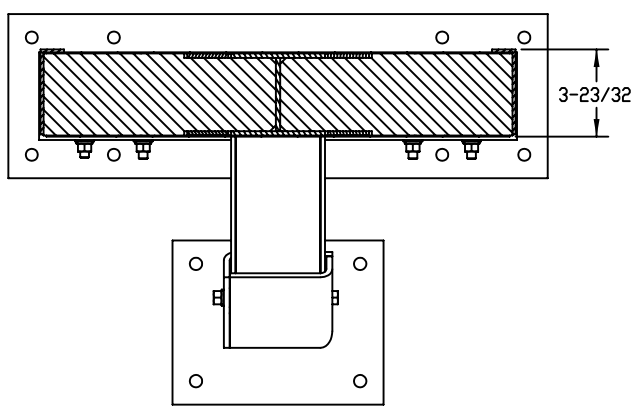

SECTION D-D

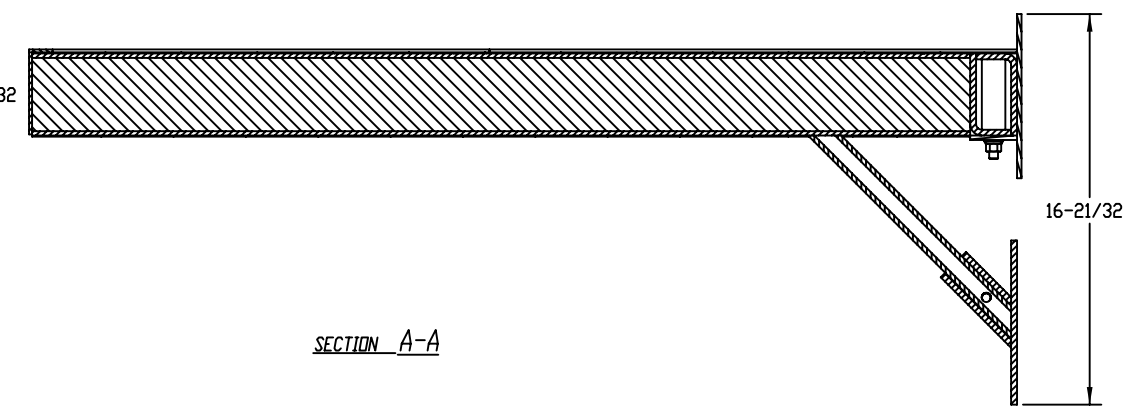

SECTION A-A

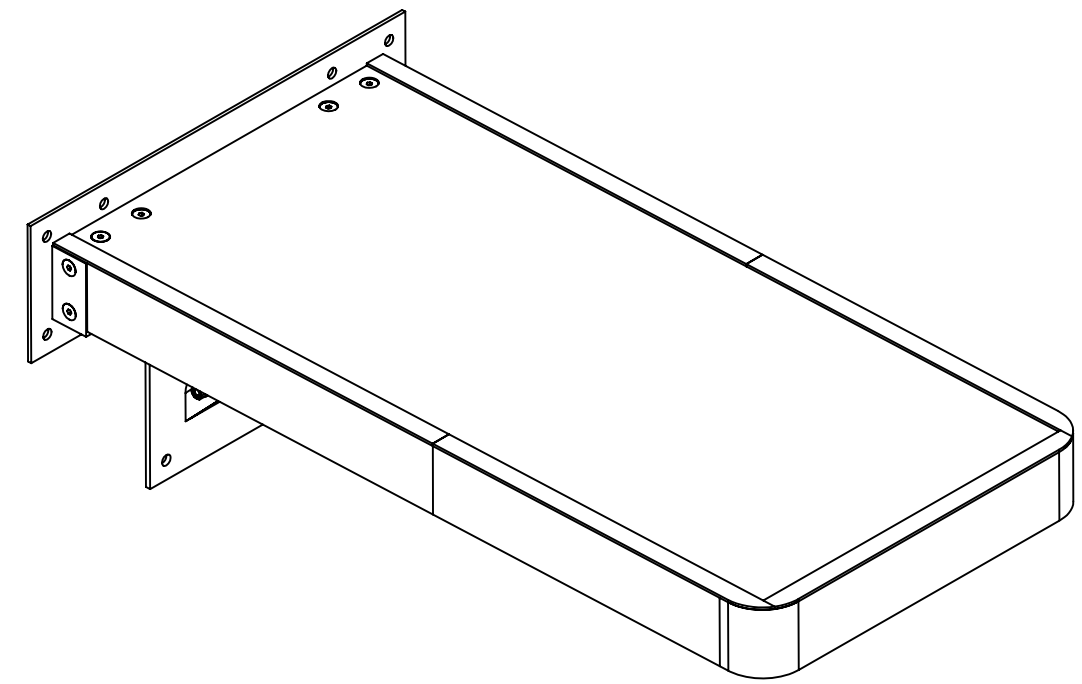

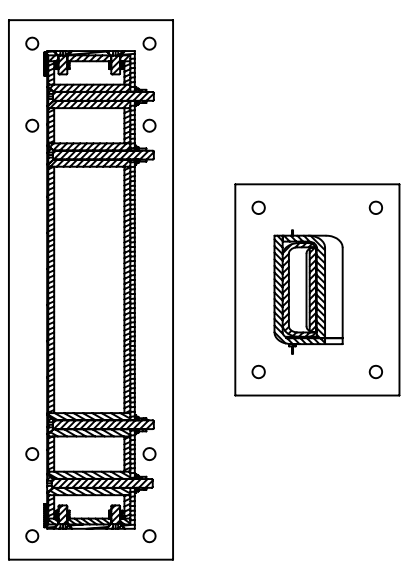

SECTION F-F

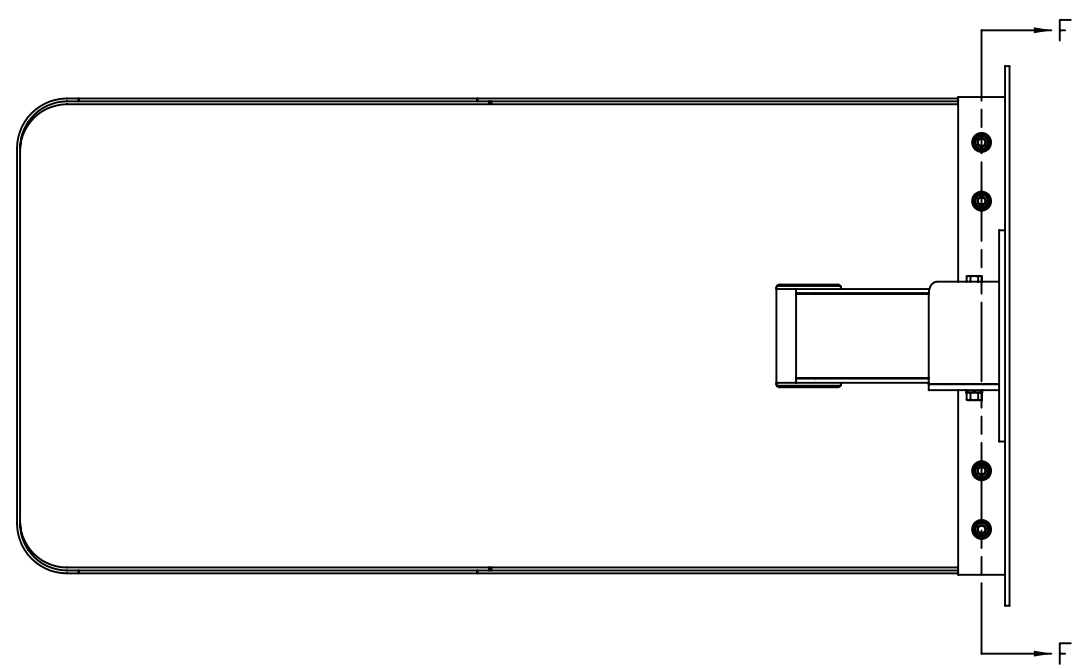

COPYRIGHT © TIAX LLC 2006

UNLESS OTHERWISE SPECIFIED DIMENSIONS ARE BASED TOLERANCES AS: DECIMALS .X ± .020 .XX ± .010 .XXX ± .005 ANGLES ± 1°	DO NOT SCALE DRAWING		TIAX CAMBRIDGE, MASSACHUSETTS 02140
	APPROVALS	DATE	
	DRAWN D. NEDDER	03-JUN-05	
MATERIAL SEE LIST OF PARTS	CHECKED		CRASH TABLE ASSEMBLY
	ENGR		
FINISHED SURFACES 63/ BREAK SHARP CORNERS .005	APPROV D. MCKEOWN	21-DEC-05	SIZE D · CAGE CODE 1YHY2 · DRAWING NO. D0292-0002 · REV 02
THIRD ANGLE PROJECTION	CASE D0292		SCALE 1/4 · 2 of 2

D0292-0002 02

X6300-GEV-IN-DSIZE-REV0

D0292-0002

REVISION HISTORY				
ZONE	REV	DESCRIPTION	DATE	APPROVED
	-	INITIAL RELEASE	21-DEC-05	D.M.
	01	ADD WELD SYMBOL		

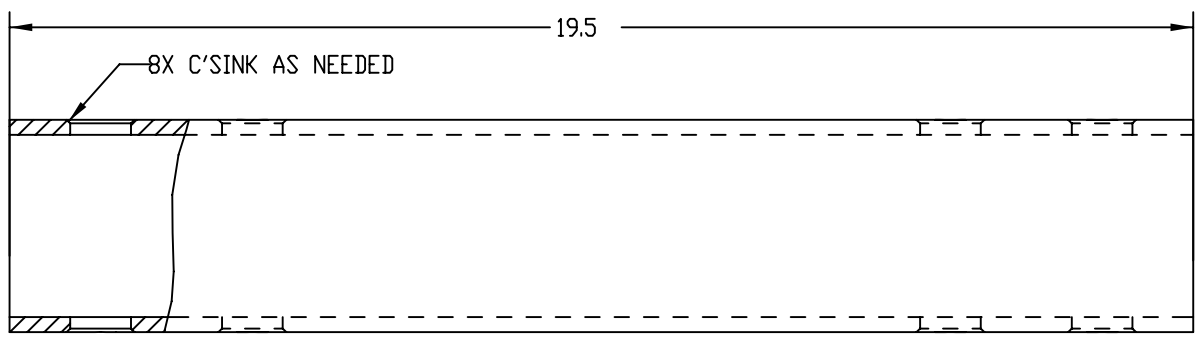

SECTION A-A

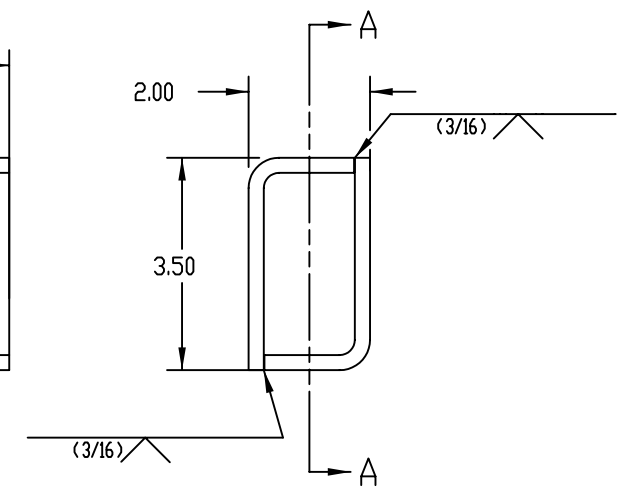

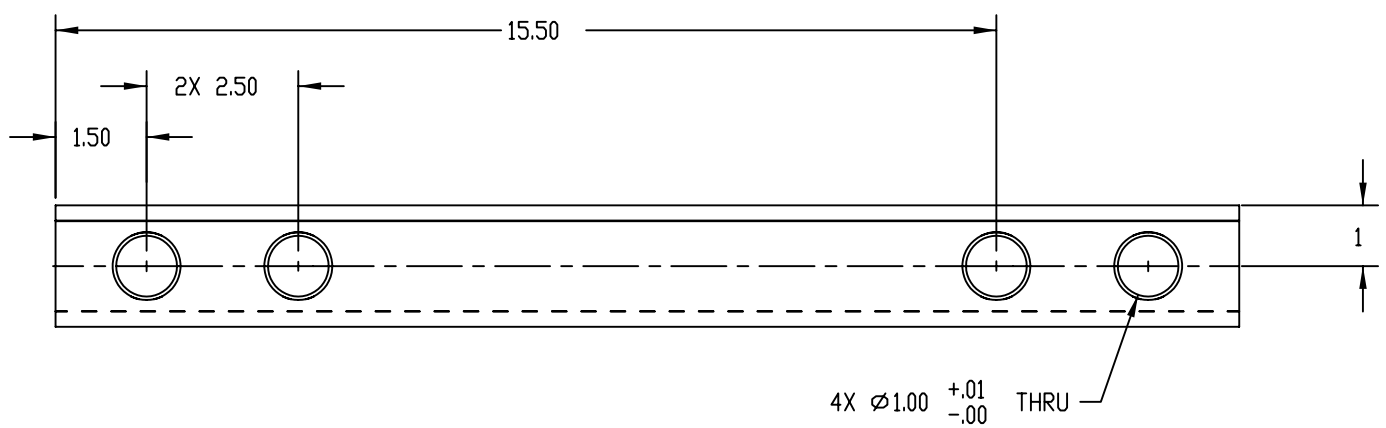

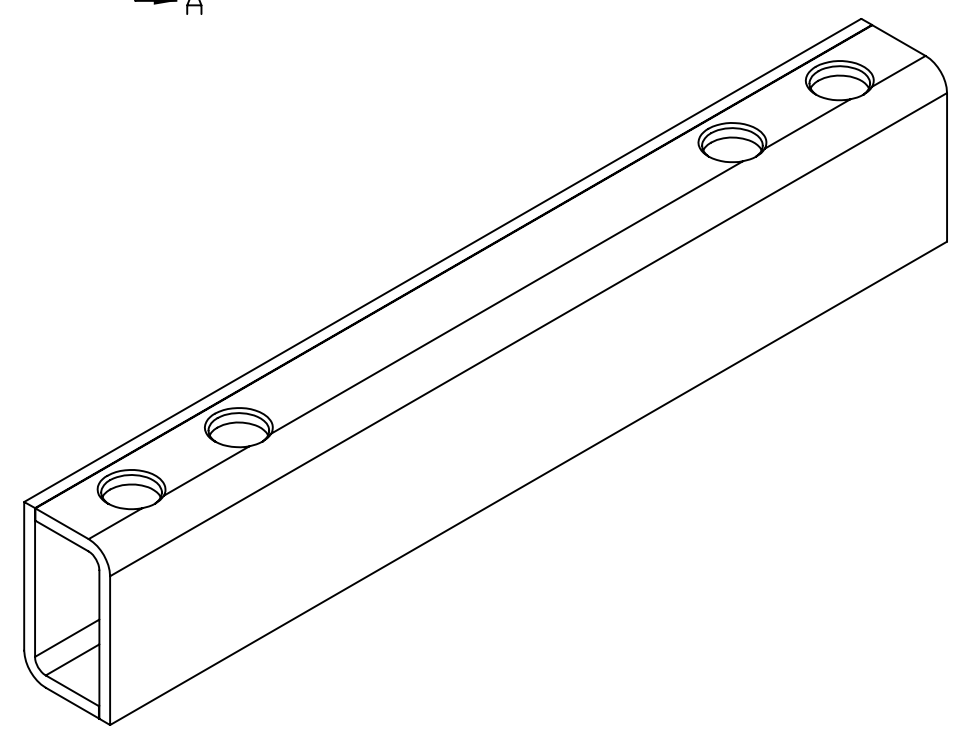

ITEM NO.	QTY REQD	IDENTIFYING NO. OR MILL NAME	NOMENCLATURE OR DESCRIPTION	VENDOR OR MANUFACTURER

LIST OF PARTS

D0292-0035	CRASH TABLE
NEXT ASSY	USED ON
APPLICATION	

UNLESS OTHERWISE SPECIFIED DIMENSIONS ARE INCHES. TOLERANCES ARE:
DECIMALS .X ± .020 ANGLES ± 1°
.XX ± .010
.XXX ± .005

MATERIAL
A572-65 STEEL
.250 THICK

FINISHED SURFACES 63
BREAK SHARP CORNERS .010

THIRD ANGLE PROJECTION

DO NOT SCALE DRAWING

APPROVALS		DATE
DRAWN	D. NEDDER	12-OCT-05
CHECKED		
ENGR		
APPROV	D. MCKEOWN	21-DEC-05
CASE	D0292	

TIAX
CAMBRIDGE, MASSACHUSETTS 02140

SIDE WALL, MTG TUBE

SIZE	CAGE CODE	DRAWING NO.	REV
C	1YHY2	D0292-0006	01
SCALE	1/2	1 of 1	

COPYRIGHT © TIAX LLC 2006

D0292-0006 01

X6300-GDV-IN-CSIZE-REV0

D0292-0006

REVISION HISTORY				
ZONE	REV	DESCRIPTION	DATE	APPROVED
	-	INITIAL RELEASE	21-DEC-05	D.M.
	01	ADD WELD SYMBOLS, ADD ROUND EDGES NOTE		

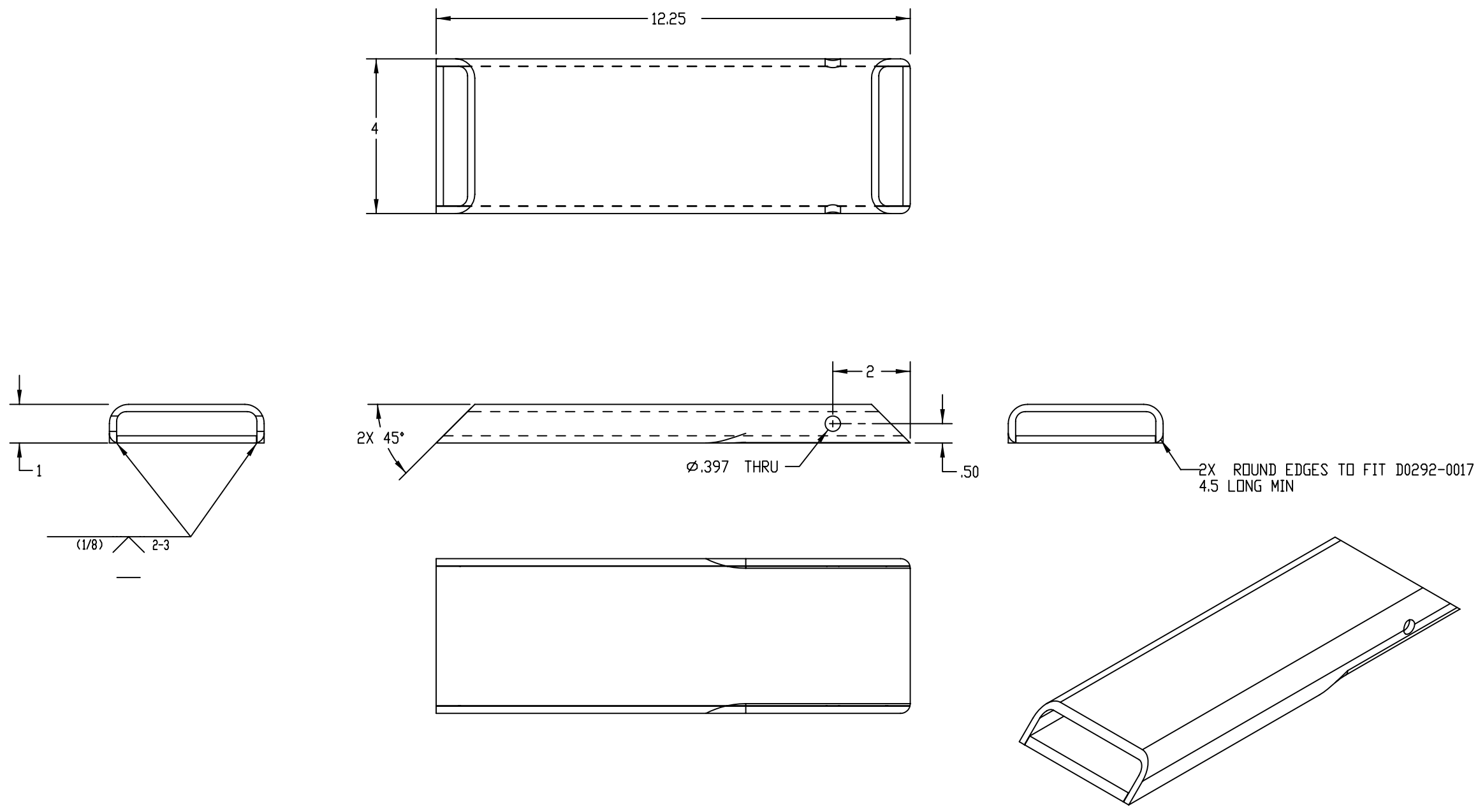

NOTES:

1. CHECK FIT WITH D0292-0017

ITEM NO.	QTY REQD	IDENTIFYING NO. OR MILL NAME	NOMENCLATURE OR DESCRIPTION	VENDOR OR MANUFACTURER
LIST OF PARTS				

D0292-0009	CRASH TABLE		
NEXT ASSY	USED ON		
APPLICATION			

UNLESS OTHERWISE SPECIFIED DIMENSIONS ARE INCHES. TOLERANCES ARE:
DECIMALS .X ± .020 .XX ± .010 .XXX ± .005 ANGLES ± 1°

MATERIAL: A572-65 STEEL .188 THICK

FINISHED SURFACES 63 BREAK SHARP CORNERS .010

THIRD ANGLE PROJECTION

DO NOT SCALE DRAWING

APPROVALS		DATE
DRAWN	D. NEDDER	3-JUN-05
CHECKED		
ENGR		
APPROV	D. MCKEOWN	21-DEC-05
CASE	D0292	

TIAX CAMBRIDGE, MASSACHUSETTS 02140

STRUT

SIZE	CAGE CODE	DRAWING NO.	REV
C	1YHY2	D0292-0008	01
SCALE 1/2		1 of 1	

COPYRIGHT © TIAX LLC 2006

D0292-0008 01

X6300-GDV-IN-CSIZE-REV0

D0292-0008

REVISION HISTORY				
ZONE	REV	DESCRIPTION	DATE	APPROVED
	-	INITIAL RELEASE	21-DEC-05	D.M.
	01	ADD WELD SYMBLOS, REMOVE NUT PLATE ASSY		

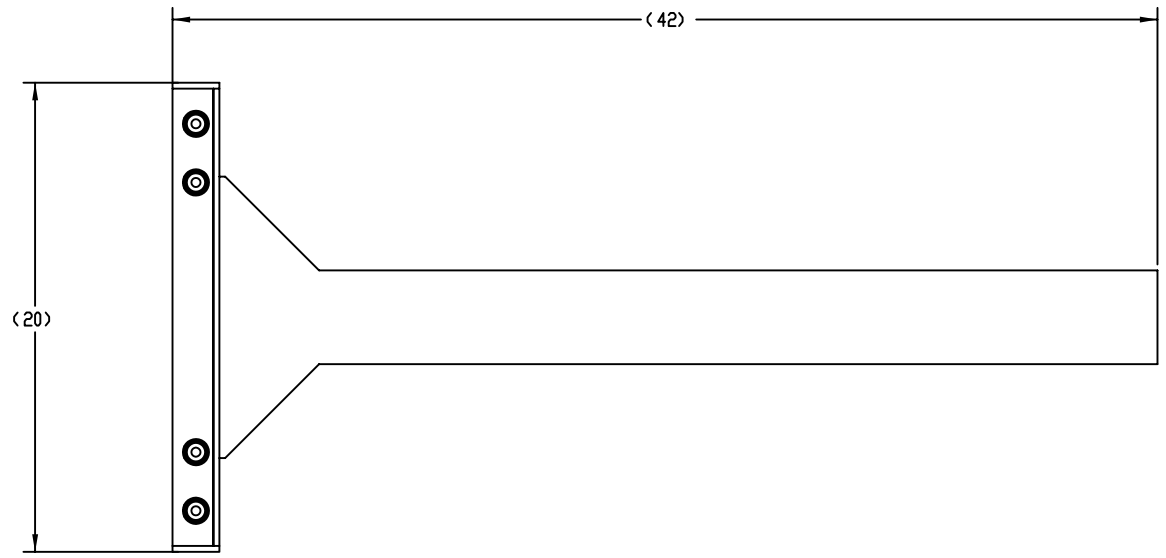

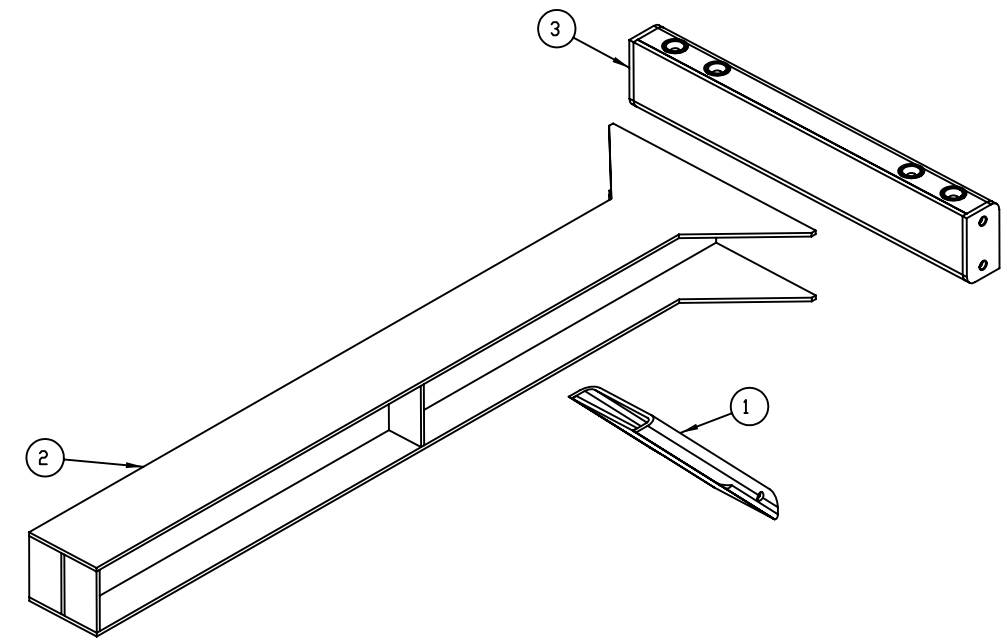

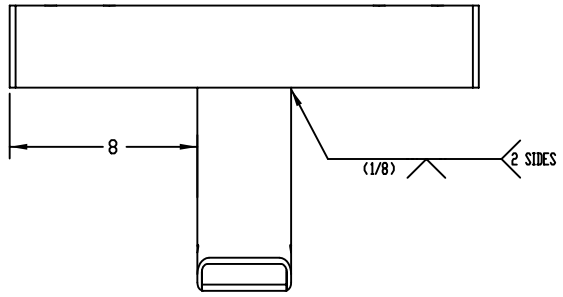

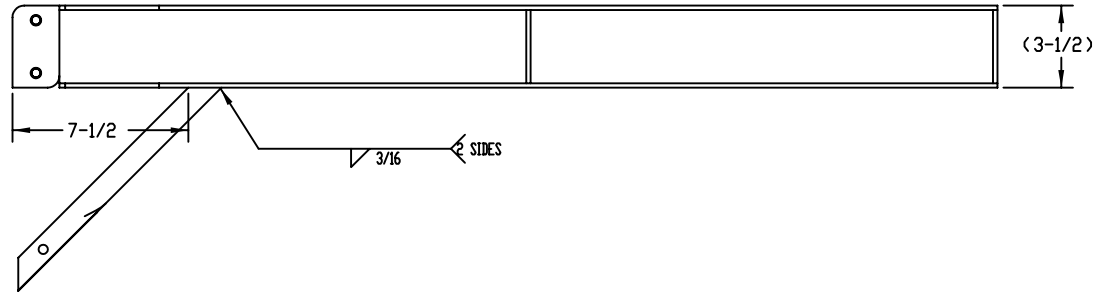

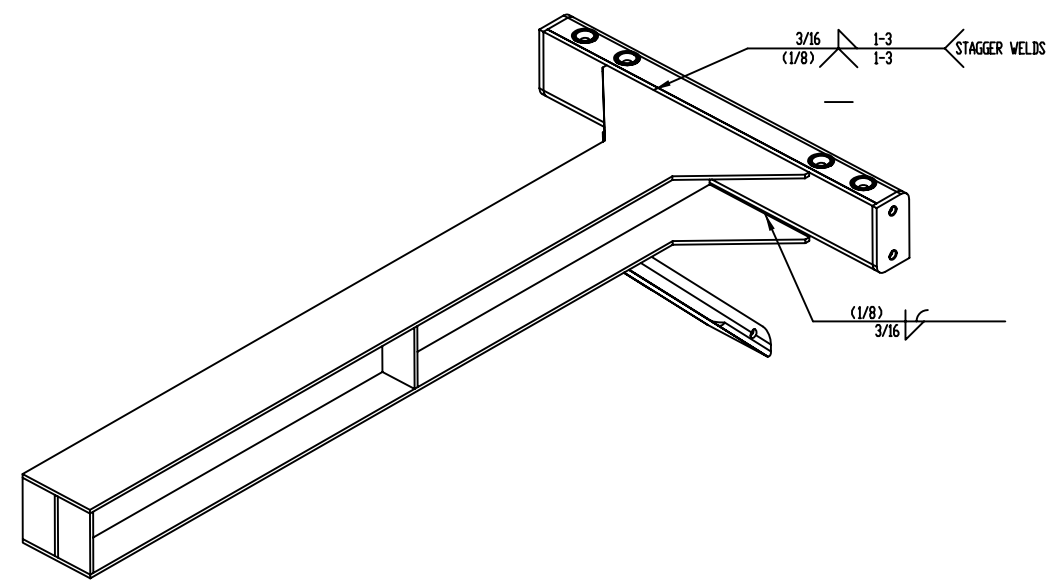

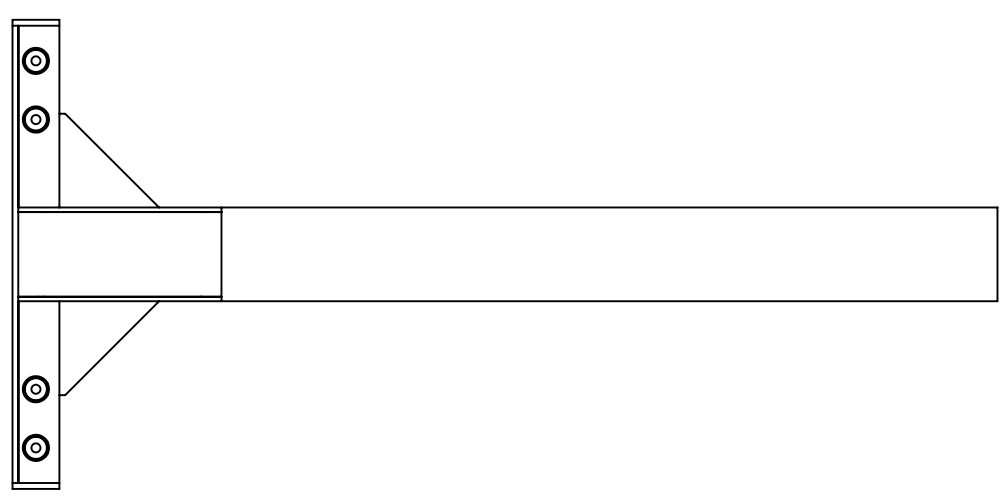

ITEM NO.	QTY REQD	IDENTIFYING NO. OR MILL NAME	NOMENCLATURE OR DESCRIPTION	VENDOR OR MANUFACTURER
3	1	D0292-0035	SIDE WALL MOUNTING TUBE ASSEMBLY	
2	1	D0292-0019	I-BEAM ASSEMBLY	
1	1	D0292-0008	STRUT	

LIST OF PARTS

D0292-0002	CRASH TABLE
NEXT ASSY	USED ON
APPLICATION	

UNLESS OTHERWISE SPECIFIED DIMENSIONS ARE INCHES. TOLERANCES ARE: DECIMALS .X ± .020, .XX ± .010, .XXX ± .005; ANGLES ± 1°

MATERIAL: SEE LIST OF PARTS

FINISHED SURFACES 63 BREAK SHARP CORNERS .010

THIRD ANGLE PROJECTION

DO NOT SCALE DRAWING

APPROVALS		DATE
DRAWN	D. NEDDER	03-JUN-05
CHECKED		
ENGR		
APPROV	D. MCKEOWN	21-DEC-05
CASE	D0292	

TIAX
CAMBRIDGE, MASSACHUSETTS 02140

FRAME ASSEMBLY, CRASH TABLE

SIZE	CAGE CODE	DRAWING NO.	REV
D	1YHY2	D0292-0009	01
SCALE 1/4		1 of 1	

COPYRIGHT © TIAX LLC 2006

D0292-0009 01

X6300-GEV-IN-DSIZE-REV0

D0292-0009

REVISION HISTORY				
ZONE	REV	DESCRIPTION	DATE	APPROVED
	-	INITIAL RELEASE	21-DEC-05	D.M.
	01	FIX HOLE AND C'SINK QTY		

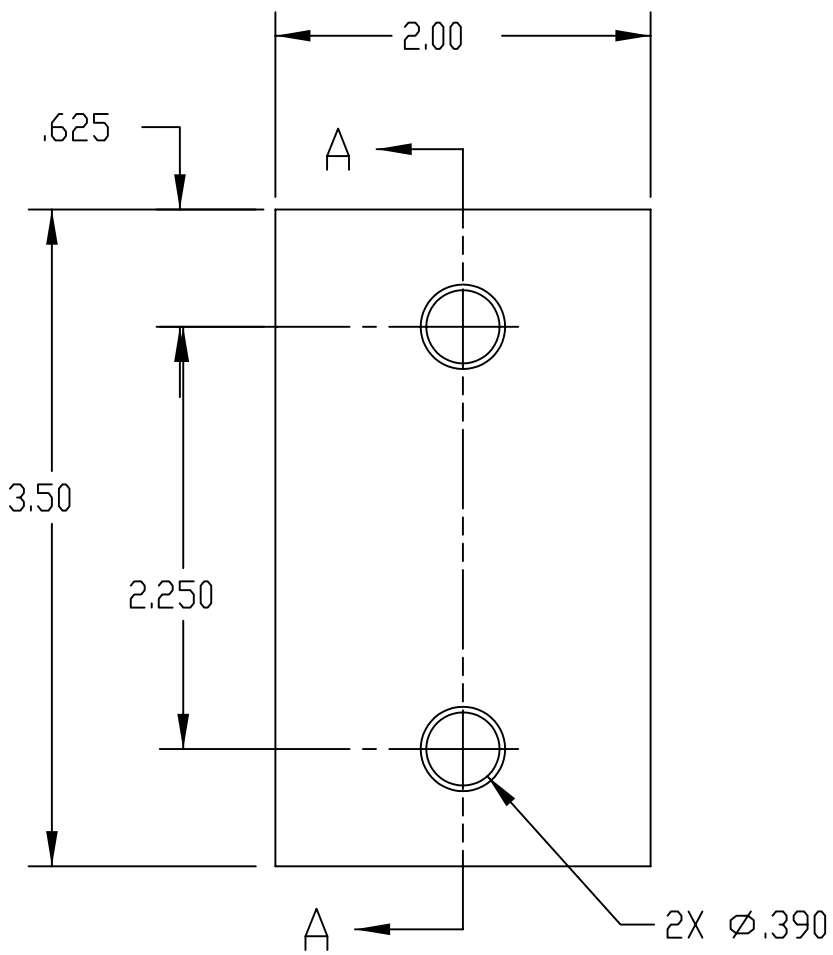

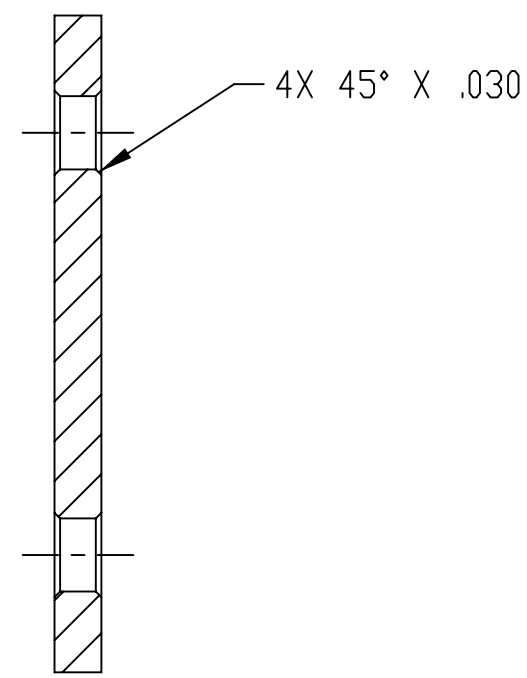

SECTION A-A

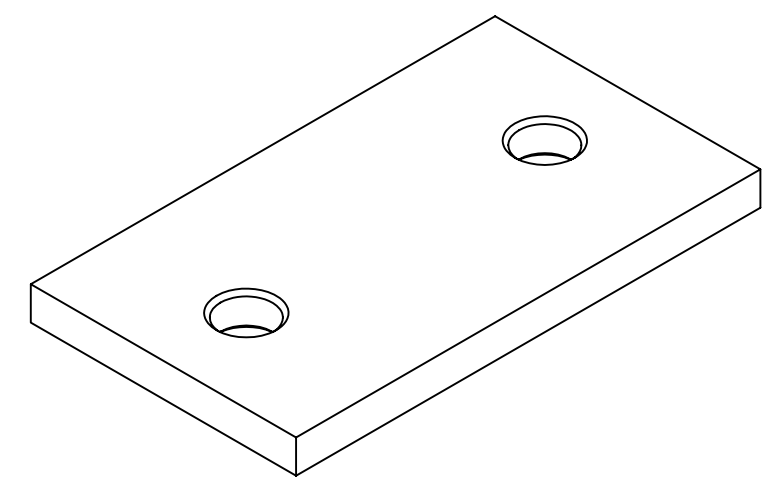

COPYRIGHT © TIAX LLC 2006

D0292-0036	CRASH TABLE
NEXT ASSY	USED ON
APPLICATION	

UNLESS OTHERWISE SPECIFIED DIMENSIONS ARE INCHES. TOLERANCES ARE:
DECIMALS .X ± .020 ANGLES ± 1°
.XX ± .010
.XXX ± .005

MATERIAL
A572-65 STEEL
.250 THICK

FINISHED SURFACES 63
BREAK SHARP CORNERS .010

THIRD ANGLE PROJECTION

DO NOT SCALE DRAWING

APPROVALS		DATE
DRAWN	D. NEDDER	3-JUN-05
CHECKED		
ENGR		
APPROV	D. MCKEOWN	21-DEC-05
CASE	D0292	

TIAX
CAMBRIDGE, MASSACHUSETTS 02140

END CAP,
SIDE WALL MTG TUBE

SIZE	CAGE CODE	DRAWING NO.	REV
B	1YHY2	D0292-0010	01
SCALE	1/1	1 of 1	

X6300-GOV-IN-BSIZE-REV0

D0292-0010

REVISION HISTORY				
ZONE	REV	DESCRIPTION	DATE	APPROVED
	-	INITIAL RELEASE	21-DEC-05	D.M.
	01	ADD MOUNTING HOLES	17-JAN-06	D.M.
	02	ADD WELD SYMBOLS		

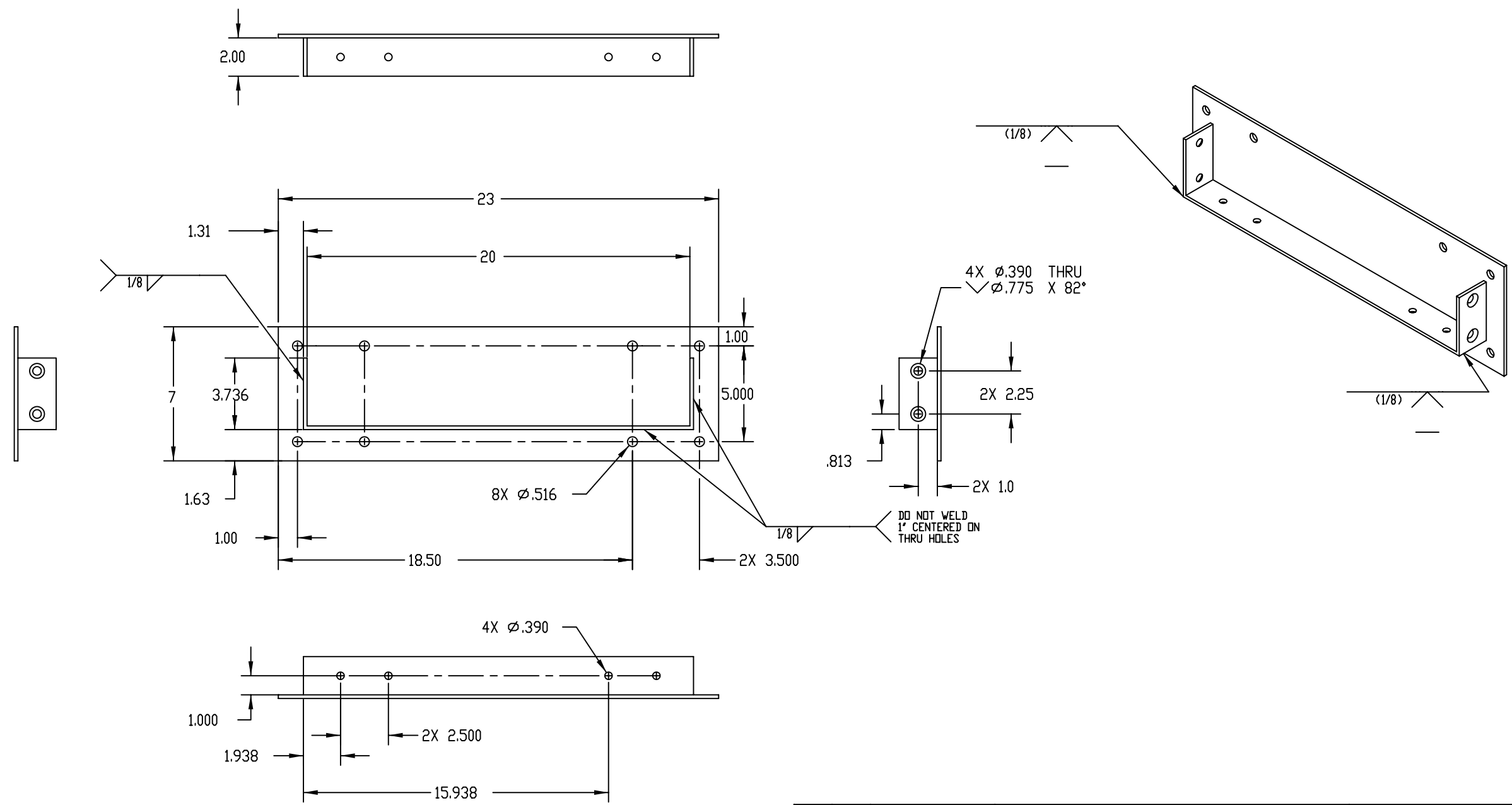

NOTES:

1. CHECK FIT WITH D0292-0035

ITEM NO.	QTY REQD	IDENTIFYING NO. OR MILL NAME	NOMENCLATURE OR DESCRIPTION	VENDOR OR MANUFACTURER
			LIST OF PARTS	
		D0292-0002	CRASH TABLE	
		NEXT ASSY	USED ON	
		APPLICATION		

UNLESS OTHERWISE SPECIFIED DIMENSIONS ARE INCHES. TOLERANCES ARE:
DECIMALS .X ± .020 ANGLES ± 1°
.XX ± .010
.XXX ± .005

MATERIAL
A572-65 STEEL
.188 THICK

FINISHED SURFACES 63
BREAK SHARP CORNERS .010

THIRD ANGLE PROJECTION

DO NOT SCALE DRAWING

APPROVALS		DATE
DRAWN	D. NEDDER	03-JUN-05
CHECKED		
ENGR		
APPROV	D. MCKEOWN	21-DEC-05
CASE	D0292	

TIAX
CAMBRIDGE, MASSACHUSETTS 02140

TOP BEAM ASSEMBLY

SIZE	CAGE CODE	DRAWING NO.	REV
C	1YHY2	D0292-0013	02
SCALE 1/4		1 of 1	

COPYRIGHT © TIAX LLC 2006

D0292-0013 02

X6300-GDV-IN-CSIZE-REV0

D0292-0013

REVISION HISTORY				
ZONE	REV	DESCRIPTION	DATE	APPROVED
	-	INITIAL RELEASE	21-DEC-05	D.M.
	01	ADD WELD SYMBOL		

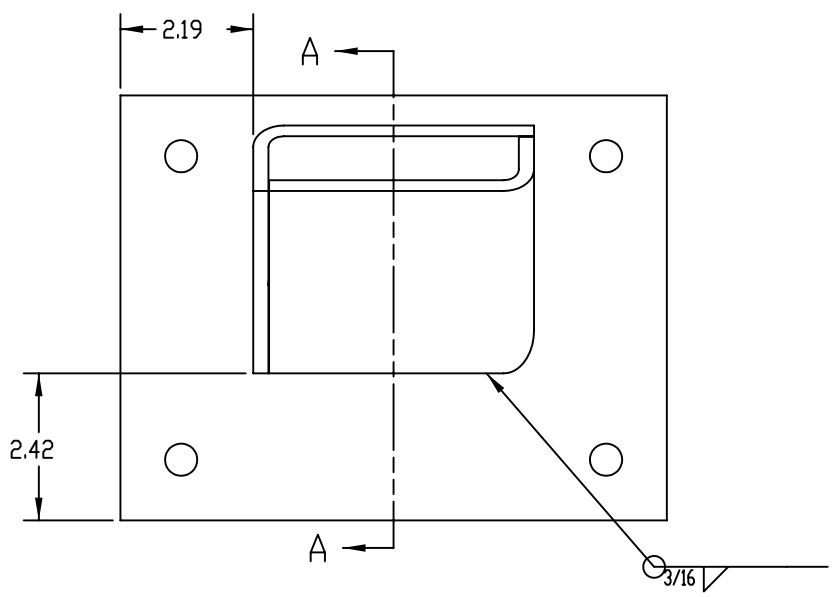

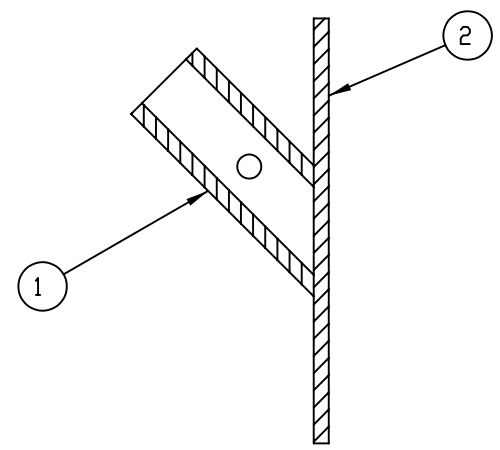

SECTION A-A

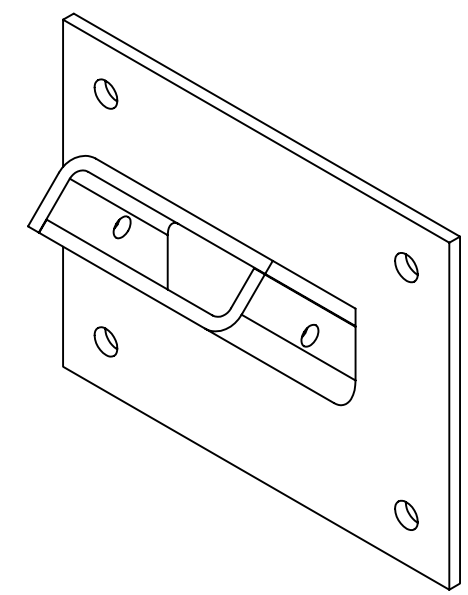

ITEM NO.	QTY REQD	IDENTIFYING NO. OR MILL NAME	NOMENCLATURE OR DESCRIPTION	VENDOR OR MANUFACTURER
2	1	D0292-0037	LOWER MOUNTING PLATE	
1	1	D0292-0017	MTG BRACKET, STRUT	

LIST OF PARTS

D0292-0002	CRASH TABLE
NEXT ASSY	USED ON
APPLICATION	

UNLESS OTHERWISE SPECIFIED DIMENSIONS ARE INCHES. TOLERANCES ARE:
DECIMALS .X ± .020 ANGLES ± 1°
.XX ± .010
.XXX ± .005

MATERIAL
SEE LIST OF PARTS

FINISHED SURFACES 63
BREAK SHARP CORNERS .010

THIRD ANGLE PROJECTION

DO NOT SCALE DRAWING

APPROVALS		DATE
DRAWN	D. NEDDER	03-JUN-05
CHECKED		
ENGR		
APPROV	D. MCKEOWN	21-DEC-05
CASE	D0292	

TIAX
CAMBRIDGE, MASSACHUSETTS 02140

LOWER BEAM ASSEMBLY

SIZE	CAGE CODE	DRAWING NO.	REV
C	1YHY2	D0292-0016	01
SCALE	1/2	1 of 1	

COPYRIGHT © TIAX LLC 2006

D0292-0016 01

X6300-GDV-IN-CSIZE-REV0

D0292-0016

REVISION HISTORY				
ZONE	REV	DESCRIPTION	DATE	APPROVED
	-	INITIAL RELEASE	21-DEC-05	D.M.
	01	4.13 WAS 4.02, REMOVE 45° CUT ADD WELD SYMBOLS, CHANGED DIMS TO FRACTIONS		

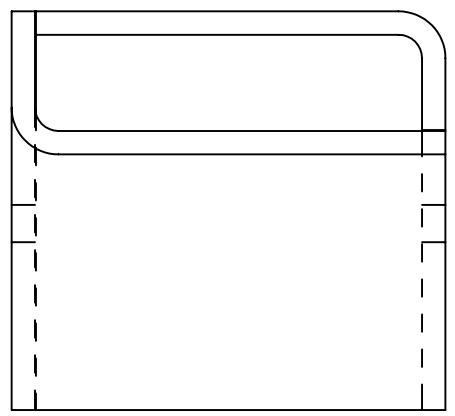

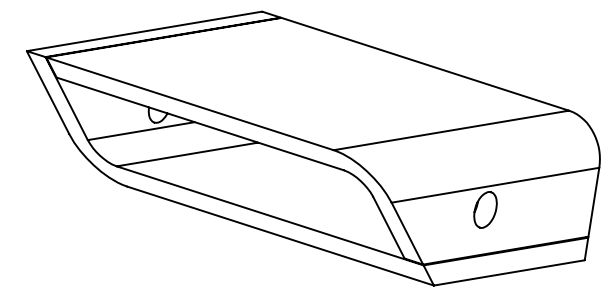

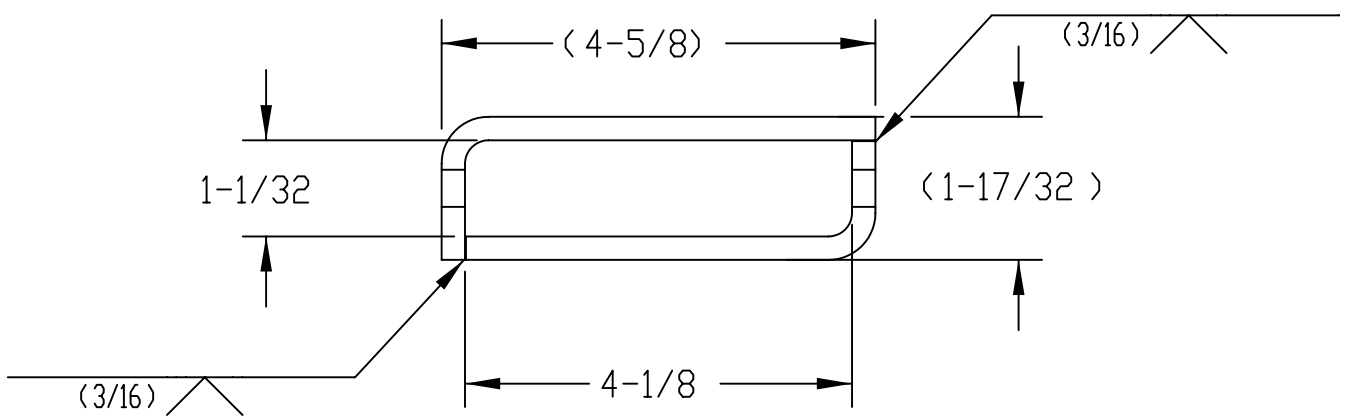

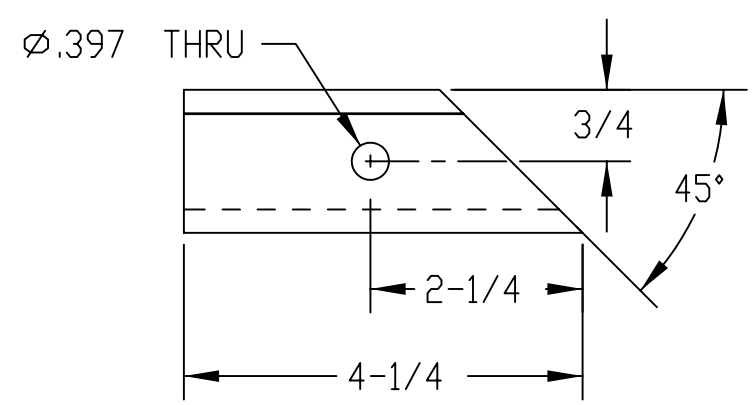

NOTES:

1. CHECK FIT WITH STRUT TUBE D0292-0008

D0292-0016	CRASH TABLE
NEXT ASSY	USED ON
APPLICATION	

UNLESS OTHERWISE SPECIFIED DIMENSIONS ARE INCHES. TOLERANCES ARE:
DECIMALS .X ± .020 ANGLES ± 1°
.XX ± .010
.XXX ± .005

MATERIAL
A572-65 STEEL
.250 THICK

FINISHED SURFACES 63
BREAK SHARP CORNERS .010

THIRD ANGLE PROJECTION

DO NOT SCALE DRAWING

APPROVALS		DATE
DRAWN	D. NEDDER	3-JUN-05
CHECKED		
ENGR		
APPROV	D. MCKEOWN	21-DEC-05
CASE	D0292	

TIAX
CAMBRIDGE, MASSACHUSETTS 02140

MTG BRACKET, STRUT

SIZE	CAGE CODE	DRAWING NO.	REV
B	1YHY2	D0292-0017	01
SCALE	1/2	1 of 1	

COPYRIGHT © TIAX LLC 2006

REVISION HISTORY				
ZONE	REV	DESCRIPTION	DATE	APPROVED
	-	INITIAL RELEASE	21-DEC-05	D.M.
	01	ADD WELD SYMBOLS		

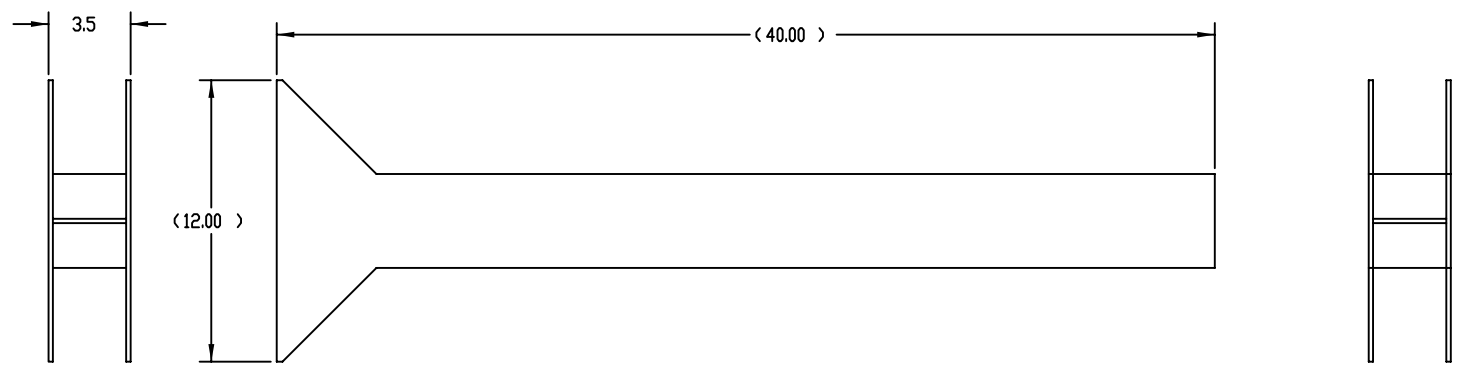

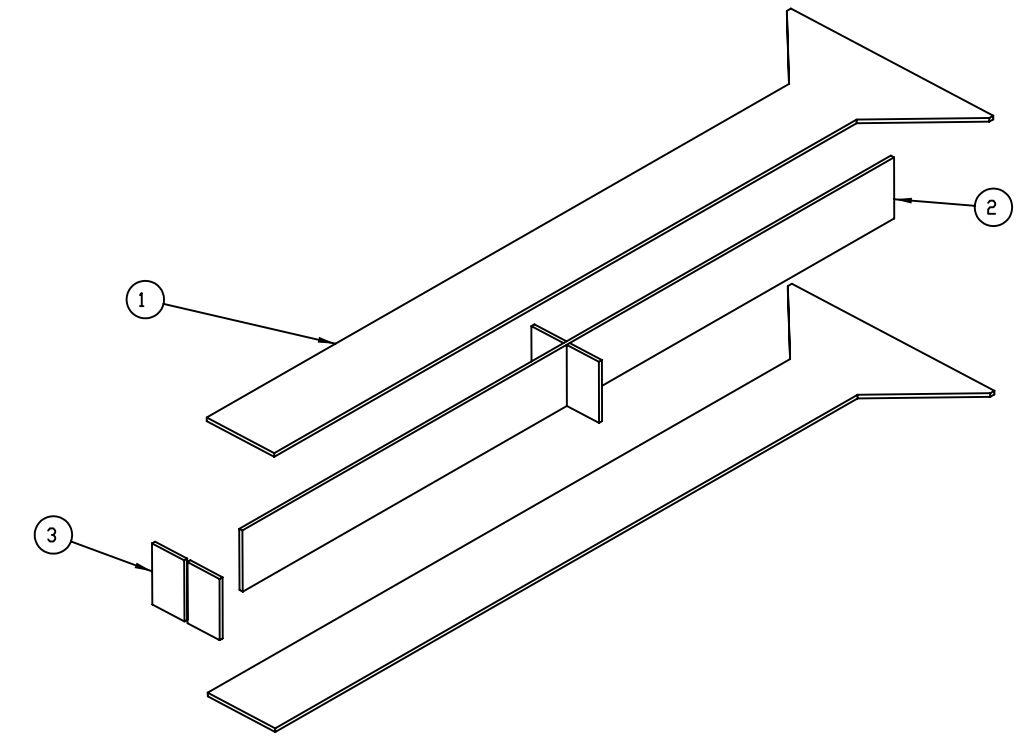

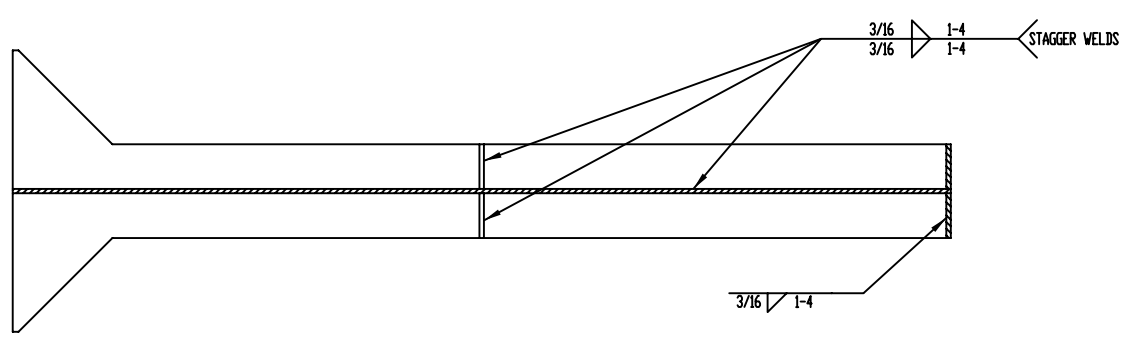

SECTION A-A

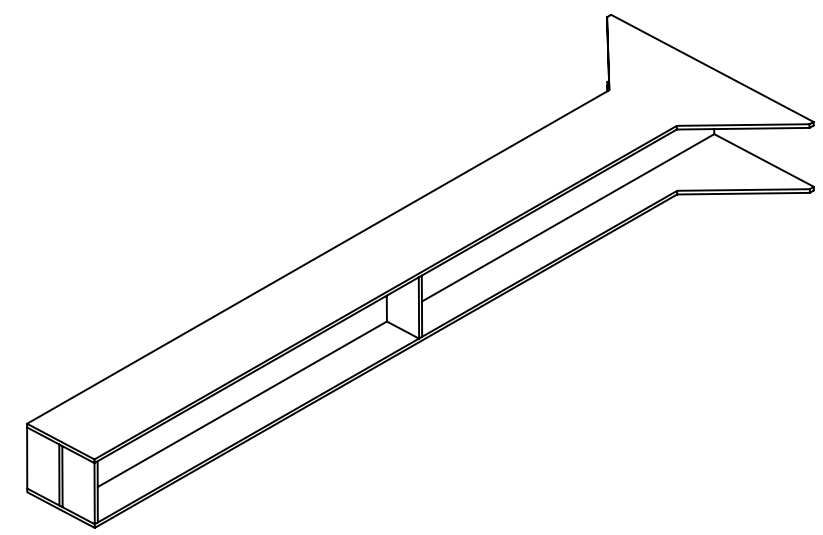

ITEM NO.	QTY REQD	IDENTIFYING NO. OR MILL NAME	NOMENCLATURE OR DESCRIPTION	VENDOR OR MANUFACTURER
3	4	D0292-0026	I-BEAM END CAP	
2	1	D0292-0025	I-BEAM WEB	
1	2	D0292-0024	I-BEAM PLATE	

LIST OF PARTS

NEXT ASSY	USED ON
D0292-0009	CRASH TABLE

APPLICATION

UNLESS OTHERWISE SPECIFIED DIMENSIONS ARE SHOWN TOLERANCES ARE:
DECIMALS X ± .020 ANGLES ± 1°
XX ± .010
XXX ± .005

MATERIAL: SEE LIST OF PARTS

FINISHED SURFACES 63
BREAK SHARP CORNERS .010

THIRD ANGLE PROJECTION

DO NOT SCALE DRAWING

APPROVALS		DATE
DRAWN	D. NEDDER	12-OCT-05
CHECKED		
ENGR		
APPROV	D. MCKEOWN	21-DEC-05
CASE	D0292	

TIAX
CAMBRIDGE, MASSACHUSETTS 02140

I-BEAM ASSEMBLY

SIZE	CAGE CODE	DRAWING NO.	REV
D	1YHY2	D0292-0019	01
SCALE 1/4		1 of 1	

COPYRIGHT © TIAX LLC 2006

D0292-0019 01

D0292-0019

X6300-GEN-IN-DSIZE-REV0

REVISION HISTORY				
ZONE	REV	DESCRIPTION	DATE	APPROVED
	-	INITIAL RELEASE	21-DEC-05	D.M.
	01	22 WAS 20.97, 19 3/4 WAS 20 CHANGED DIMENSIONS TO FRACTIONS	10-FEB-06	D.M.
	02	.06 WIDE X .02 DEEP WAS .01 DEEP 24" WAS 22", ADD 20" AND 4" VERTICAL CUTS		

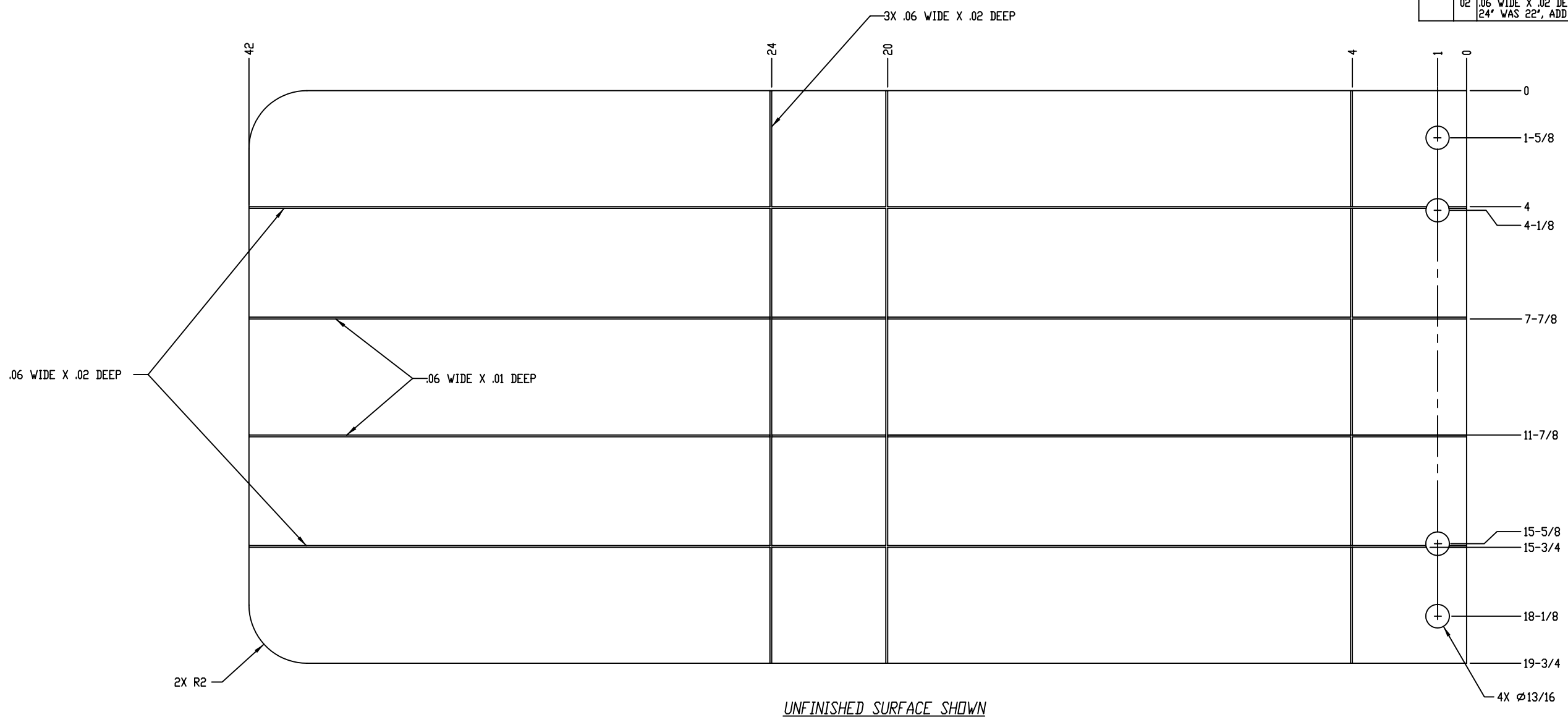

NOTES:

1. MATERIAL - .048 THICK HIGH PRESSURE LAMINATE
   VENDOR - NEVAMAR COMPANY
   PART NUMBER - AUBERGINE MATRIX MR1006

ITEM NO.	QTY REQD	IDENTIFYING NO. OR MILL NAME	NOMENCLATURE OR DESCRIPTION	VENDOR OR MANUFACTURER

LIST OF PARTS

D0292-0002	CRASH TABLE	UNLESS OTHERWISE SPECIFIED DIMENSIONS ARE SHOWN TOLERANCES ARE: DECIMALS X ± .020, XX ± .010, XXX ± .005; ANGLES ± 1°	DO NOT SCALE DRAWING	TIAX CAMBRIDGE, MASSACHUSETTS 02140
NEXT ASSY	USED ON	MATERIAL: SEE NOTES	APPROVALS / DATE: DRAWN D. NEDDER 06-JUN-05; CHECKED; ENGR; APPROV D. MCKEOWN 21-DEC-05	TOP SKIN
APPLICATION		FINISHED SURFACES 63/; BREAK SHARP CORNERS .010; THIRD ANGLE PROJECTION	CAGE D0292	SIZE D; CAGE CODE 1YHY2; DRAWING NO. D0292-0022; REV 02; SCALE 1/2; 1 of 1

COPYRIGHT © TIAX LLC 2006

D0292-0022

D0292-0022 02

X6300-GEN-IN-DSIZE-REV0

REVISION HISTORY				
ZONE	REV	DESCRIPTION	DATE	APPROVED
	-	INITIAL RELEASE	21-DEC-05	D.M.
	01	20 WAS 18.97 CHANGED DIMENSIONS TO FRACTIONS 7 11/16 WAS 7.97, 12 1/16 WAS 12.03 5 1/4 WAS 4.94, 7 1/4 WAS 6.84	10-FEB-06	D.M.
	02	.06 WIDE X .017 DEEP WAS .01 DEEP 7-3/4 WAS 7-1/4		

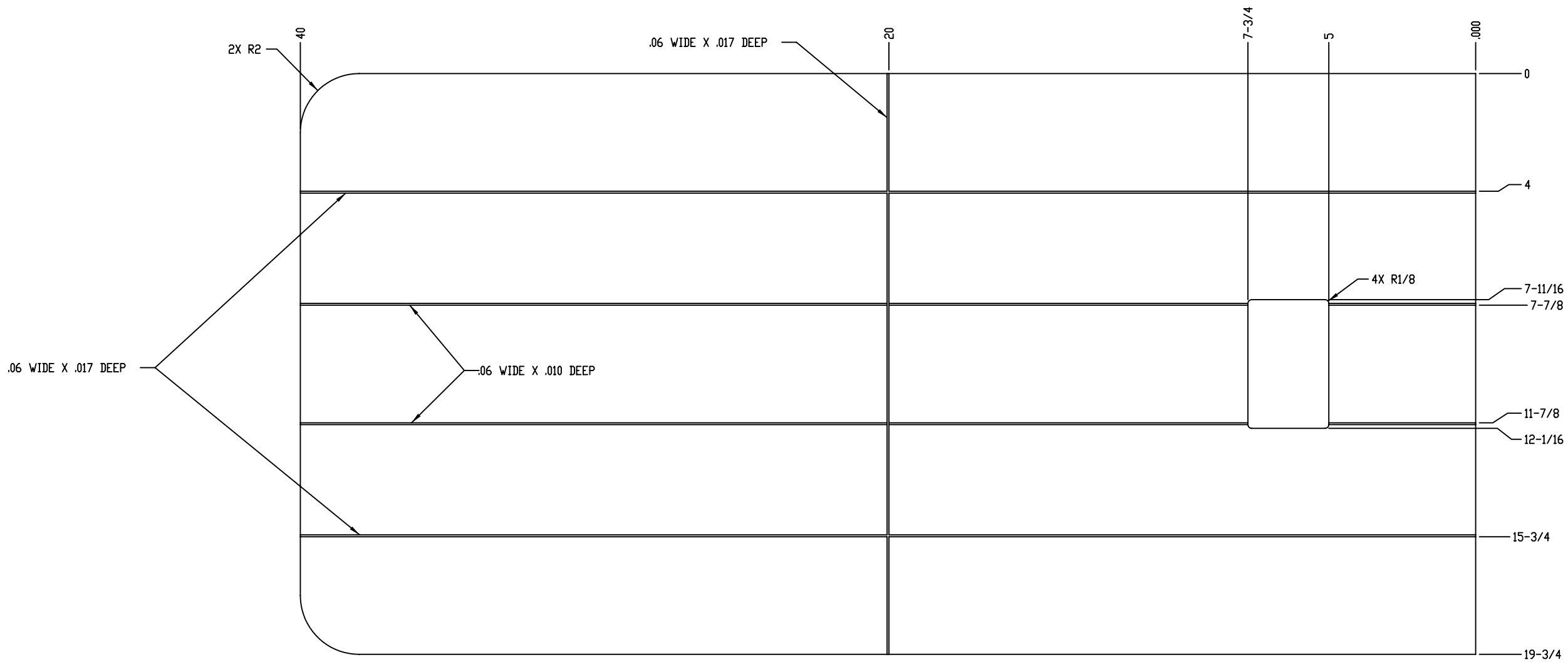

UNFINISHED SURFACE SHOWN

NOTES:

1. MATERIAL - .048 THICK HIGH PRESSURE LAMINATE
   VENDOR - NEVAMAR COMPANY
   PART NUMBER - AUBERGINE MATRIX MR1006

ITEM NO.	QTY REQD	IDENTIFYING NO. OR MILL NAME	NOMENCLATURE OR DESCRIPTION	VENDOR OR MANUFACTURER

LIST OF PARTS

UNLESS OTHERWISE SPECIFIED DIMENSIONS ARE SHOWN TOLERANCES AND: DECIMALS .X ± .020, .XX ± .010, .XXX ± .005; ANGLES ± 1°	DO NOT SCALE DRAWING		TIAX CAMBRIDGE, MASSACHUSETTS 02140
	APPROVALS	DATE	
	DRAWN D. NEDDER	06-JUN-05	
MATERIAL SEE NOTES	CHECKED		BOTTOM SKIN
	ENGR		
FINISHED SURFACES 63 / BREAK SHARP CORNERS .010	APPROV D. MCKEOWN	21-DEC-05	SIZE D · CAGE CODE 1YHY2 · DRAWING NO. D0292-0023 · REV 02
THIRD ANGLE PROJECTION	CASE D0292		SCALE 1/2 · 1 of 1

NEXT ASSY	USED ON
D0292-0002	CRASH TABLE

APPLICATION

COPYRIGHT © TIAX LLC 2006

D0292-0023 02

X6300-GEV-IN-DSIZE-REV0

D0292-0023

REVISION HISTORY				
ZONE	REV	DESCRIPTION	DATE	APPROVED
	-	INITIAL RELEASE	21-DEC-05	D.M.
	01	2X .25 WAS .50, ADD WELD SYMBLOS		

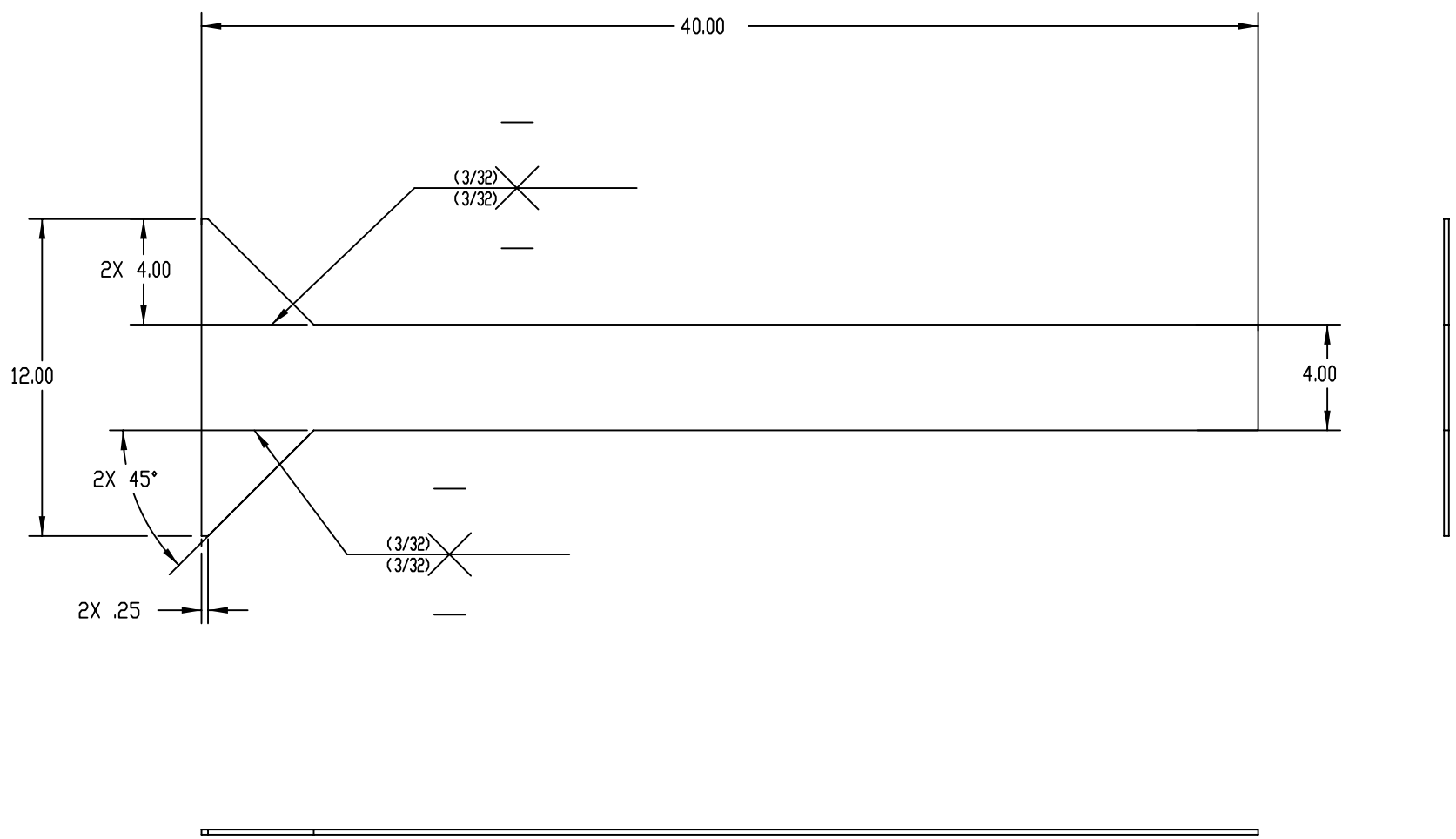

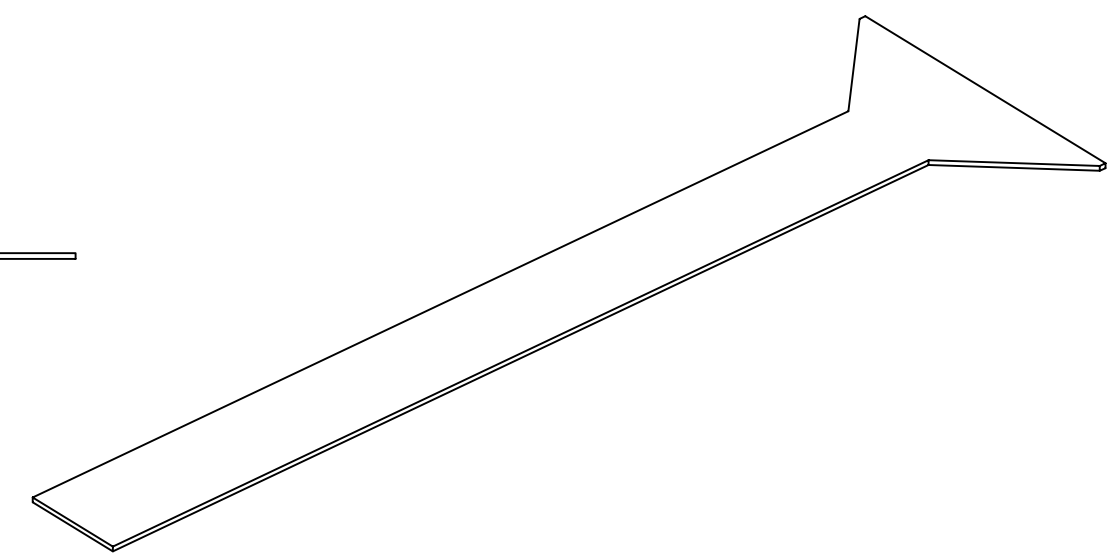

ITEM NO.	QTY REQD	IDENTIFYING NO. OR MILL NAME	NOMENCLATURE OR DESCRIPTION	VENDOR OR MANUFACTURER
			LIST OF PARTS	

D0292-0019	CRASH TABLE
NEXT ASSY	USED ON
APPLICATION	

UNLESS OTHERWISE SPECIFIED DIMENSIONS ARE INCHES. TOLERANCES ARE:
DECIMALS .X ± .020 ANGLES ± 1°
.XX ± .010
.XXX ± .005

MATERIAL
A572-65 STEEL
.188 THICK

FINISHED SURFACES 63
BREAK SHARP CORNERS .010

THIRD ANGLE PROJECTION

DO NOT SCALE DRAWING

APPROVALS		DATE
DRAWN	D. NEDDER	12-OCT-05
CHECKED		
ENGR		
APPROV	D. MCKEOWN	21-DEC-05
CASE	D0292	

TIAX
CAMBRIDGE, MASSACHUSETTS 02140

I-BEAM PLATE

SIZE	CAGE CODE	DRAWING NO.	REV
C	1YHY2	D0292-0024	01
SCALE 1/4		1 of 1	

COPYRIGHT © TIAX LLC 2006

X6300-GDV-IN-CSIZE-REV0

D0292-0024

01 D0292-0024

REVISION HISTORY				
ZONE	REV	DESCRIPTION	DATE	APPROVED
	-	INITIAL RELEASE		

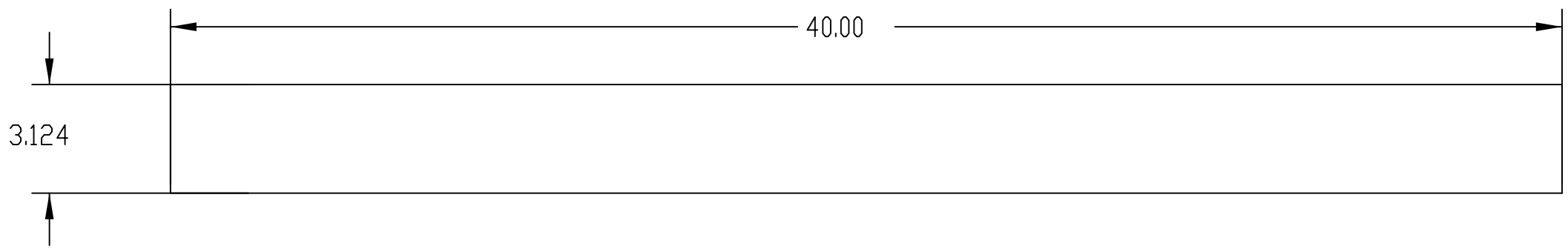

D0292-0019	CRASH TABLE
NEXT ASSY	USED ON
APPLICATION	

UNLESS OTHERWISE SPECIFIED DIMENSIONS ARE INCHES. TOLERANCES ARE:
DECIMALS .X ± .020 ANGLES ± 1°
.XX ± .010
.XXX ± .005

MATERIAL
A572-65 STEEL
.188 THICK

FINISHED SURFACES 63
BREAK SHARP CORNERS .010

THIRD ANGLE PROJECTION

DO NOT SCALE DRAWING

APPROVALS		DATE
DRAWN	D. NEDDER	12-OCT-05
CHECKED		
ENGR		
APPROV		
CASE	D0292	

TIAX
CAMBRIDGE, MASSACHUSETTS 02140

I-BEAM WEB

SIZE	CAGE CODE	DRAWING NO.	REV
B	1YHY2	D0292-0025	-
SCALE	1/4	1 of 1	

COPYRIGHT © TIAX LLC 2006

X6300-GOV-IN-BSIZE-REV0

D0292-0025

REVISION HISTORY				
ZONE	REV	DESCRIPTION	DATE	APPROVED
	-	INITIAL RELEASE		

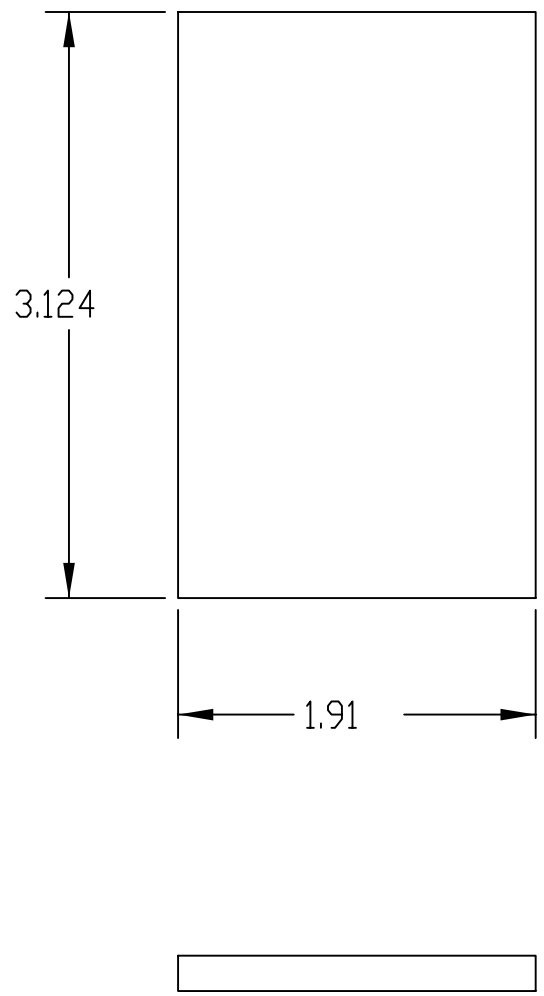

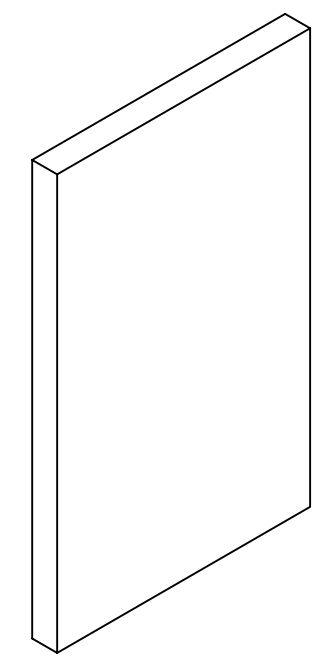

D0292-0019	CRASH TABLE
NEXT ASSY	USED ON
APPLICATION	

UNLESS OTHERWISE SPECIFIED DIMENSIONS ARE INCHES. TOLERANCES ARE:
DECIMALS .X ± .020 ANGLES ± 1°
.XX ± .010
.XXX ± .005

MATERIAL
A572-65 STEEL
.188 THICK

FINISHED SURFACES 63
BREAK SHARP CORNERS .010

THIRD ANGLE PROJECTION

DO NOT SCALE DRAWING

APPROVALS		DATE
DRAWN	D. NEDDER	12-OCT-05
CHECKED		
ENGR		
APPROV		
CASE	D0292	

TIAX
CAMBRIDGE, MASSACHUSETTS 02140

I-BEAM END CAP

SIZE	CAGE CODE	DRAWING NO.	REV
B	1YHY2	D0292-0026	-
SCALE 1/1		1 of 1	

COPYRIGHT © TIAX LLC 2006

X6300-GOV-IN-BSIZE-REV0

D0292-0026

REVISION HISTORY				
ZONE	REV	DESCRIPTION	DATE	APPROVED
	-	INITIAL RELEASE	11-JAN-06	D.M.
	01	CHANGE TO FRACTION DIMENSIONS ADD HONEYCOMB NOTE		

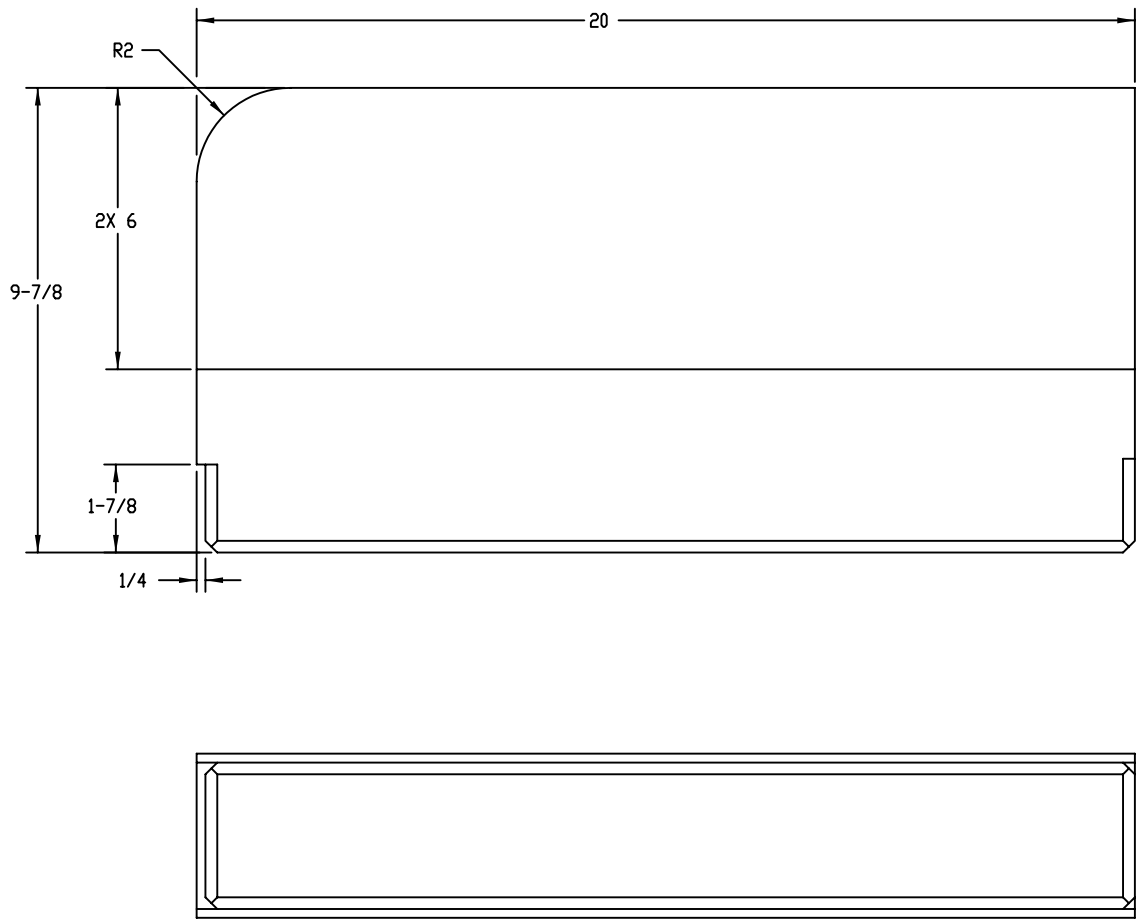

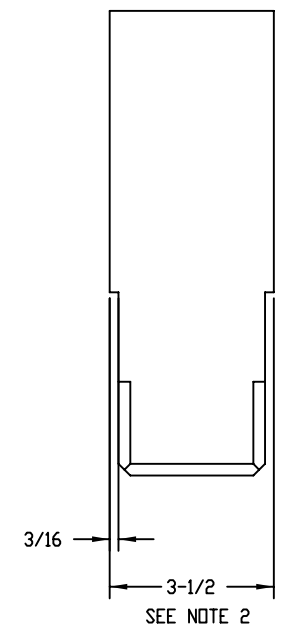

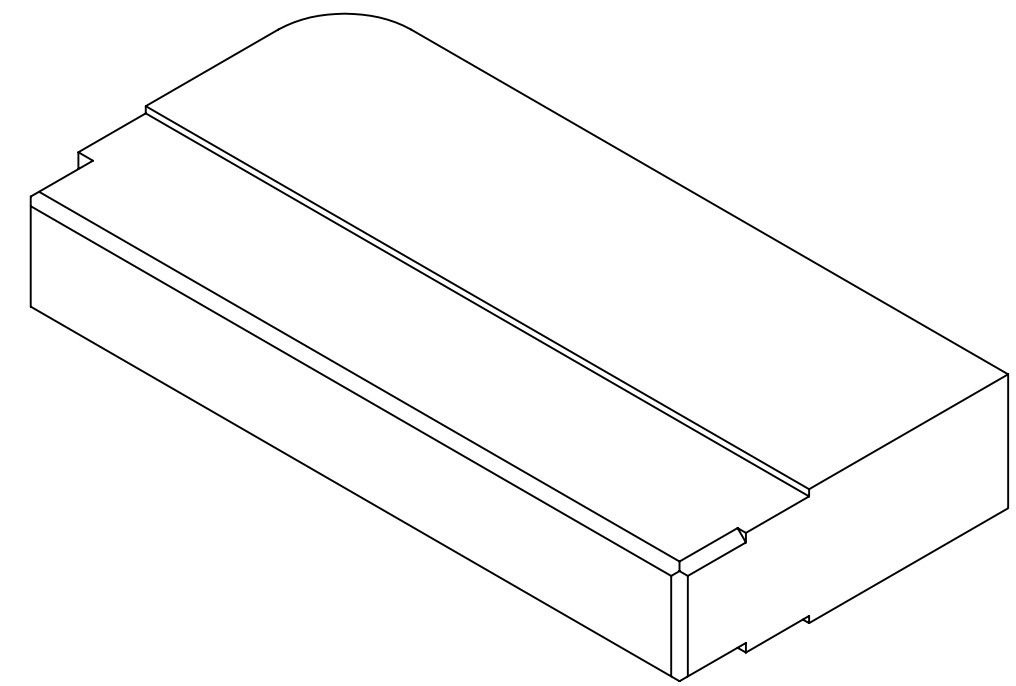

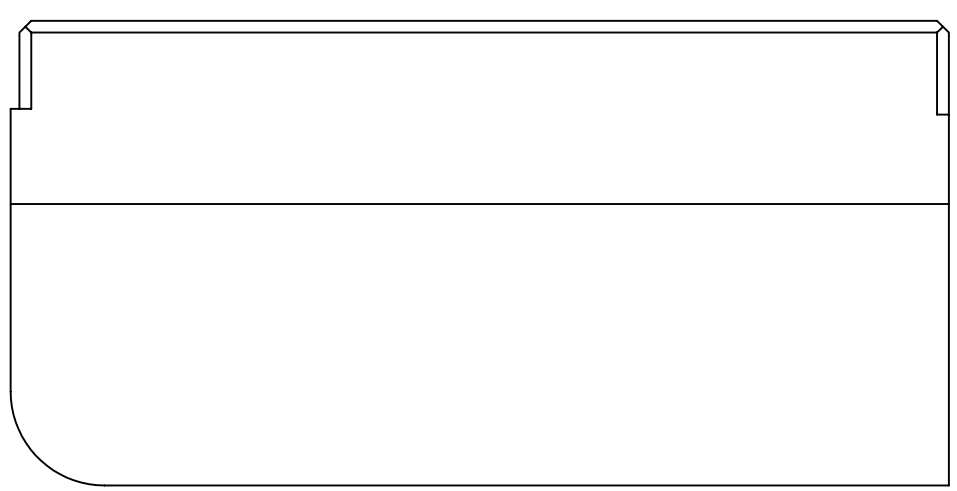

CUT OVERSIZED
BEND OUTER EDGES FLAT

ORIENTATION OF HONEYCOMB
IN THIS VIEW

COPYRIGHT © TIAX LLC 2006

NOTES:

1. MATERIAL - HEXCEL 1/4-5052-.004 ALUMINUM
2. MACHINE TO FIT FRAME, CHAMFER IS NECESSARY

ITEM NO.	QTY REQD	IDENTIFYING NO. OR MILL NAME	NOMENCLATURE OR DESCRIPTION	VENDOR OR MANUFACTURER
LIST OF PARTS				
D0292-0002		CRASH TABLE		
NEXT ASSY		USED ON		
APPLICATION				

UNLESS OTHERWISE SPECIFIED DIMENSIONS ARE INCHES TOLERANCES ARE
DECIMALS .X ± .020 ANGLES ± 1°
.XX ± .010
.XXX ± .005

MATERIAL: SEE NOTES

FINISHES SURFACES 63
BREAK SHARP CORNERS .020

THIRD ANGLE PROJECTION

DO NOT SCALE DRAWING

APPROVALS		DATE
DRAWN	D. NEDDER	13-OCT-05
CHECKED		
ENGR		
APPROV	D. MCKEOWN	11-JAN-06
CASE	D0292	

TIAX
CAMBRIDGE, MASSACHUSETTS 02140

CORE, FRONT

SIZE	CAGE CODE	DRAWING NO.	REV
D	1YHY2	D0292-0027	01
SCALE 1/2		1 of 1	

D0292-0027

X6300-GEN-IN-DSIZE-REV0

REVISION HISTORY				
ZONE	REV	DESCRIPTION	DATE	APPROVED
	-	INITIAL RELEASE	11-JAN-06	D.M.
	01	CHANGE TO FRACTION DIMENSIONS 4 5/8 WAS 5.33, ADD HONEYCOMB NOTE		

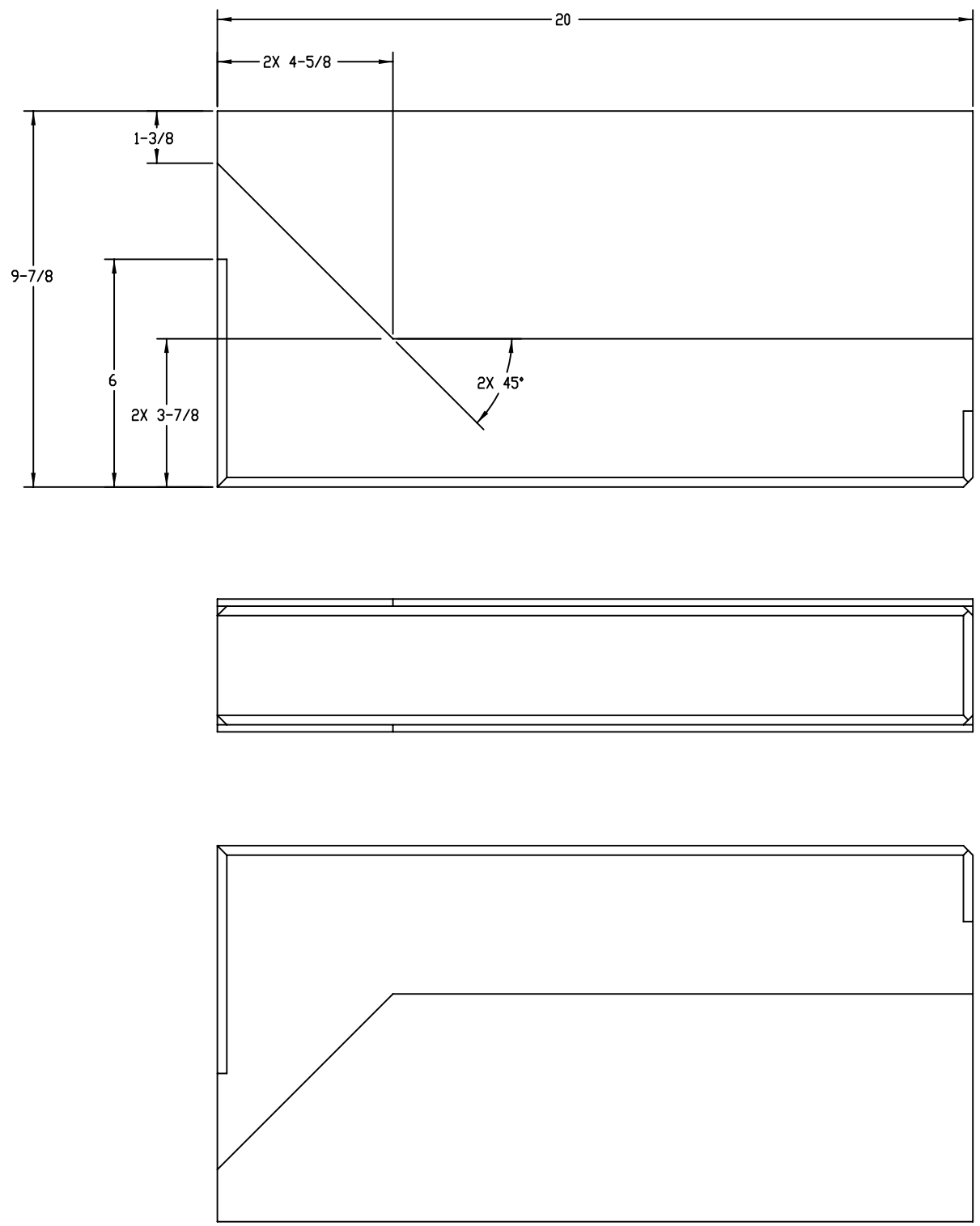

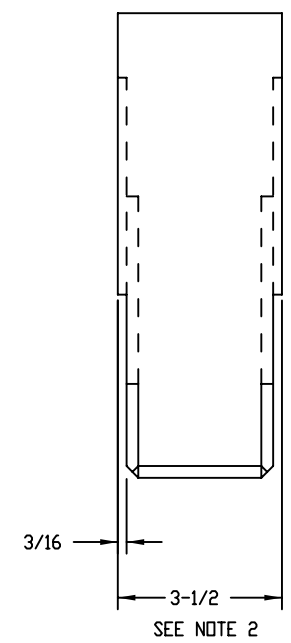

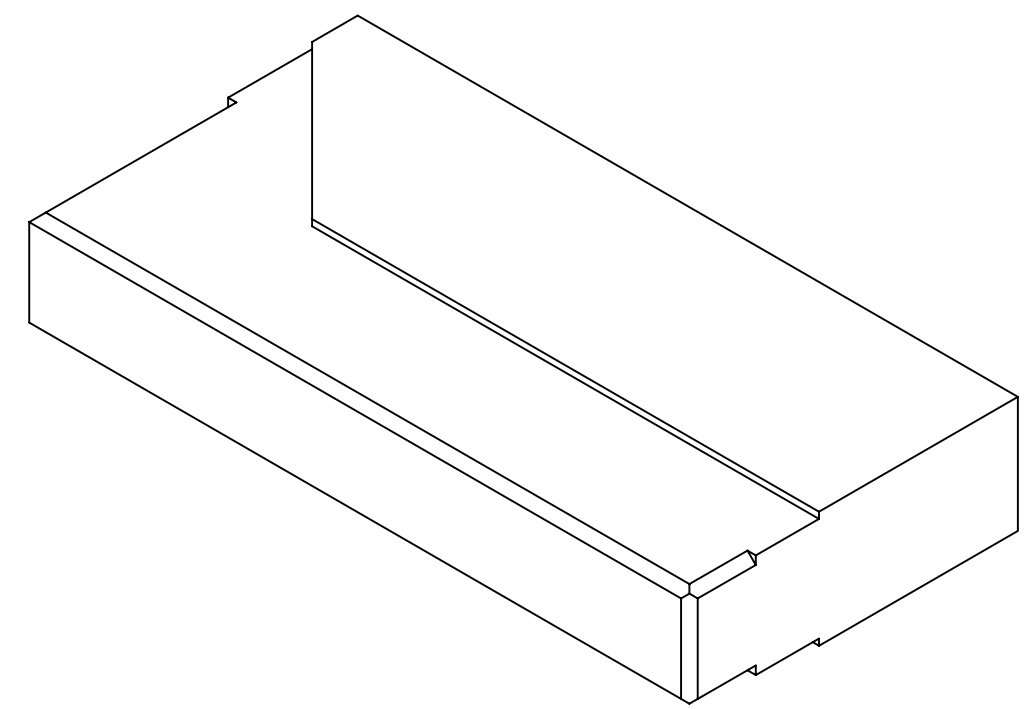

CUT OVERSIZED
BEND OUTER EDGES FLAT

ORIENTATION OF HONEYCOMB
IN THIS VIEW

NOTES:

1. MATERIAL - HEXCEL 1/4-5052-.004 ALUMINUM
2. MACHINE TO FIT FRAME, CHAMFER IF NECESSARY

COPYRIGHT © TIAX LLC 2006

ITEM NO.	QTY REQD	IDENTIFYING NO. OR MILL NAME	NOMENCLATURE OR DESCRIPTION	VENDOR OR MANUFACTURER
			LIST OF PARTS	

UNLESS OTHERWISE SPECIFIED DIMENSIONS ARE INCHES TOLERANCES ARE: DECIMALS .X ± .020, .XX ± .010, .XXX ± .005; ANGLES ± 1°	DO NOT SCALE DRAWING		TIAX CAMBRIDGE, MASSACHUSETTS 02140	
	APPROVALS	DATE		
	DRAWN D. NEDDER	13-OCT-05		
MATERIAL SEE NOTES	CHECKED		CORE, REAR	
	ENGR			
FINISHED SURFACES 63 BREAK SHARP CORNERS .010	APPROV D. MCKEOWN	11-JAN-06	SIZE D / CAGE CODE 1YHY2 / DRAWING NO. D0292-0028 / REV 01	
THIRD ANGLE PROJECTION	CASE D0292		SCALE 1/2	1 of 1

NEXT ASSY	USED ON
D0292-0002	CRASH TABLE
APPLICATION	

D0292-0028 01

X6300-GEV-IN-DSIZE-REV0

D0292-0028

REVISION HISTORY				
ZONE	REV	DESCRIPTION	DATE	APPROVED
	-	INITIAL RELEASE		

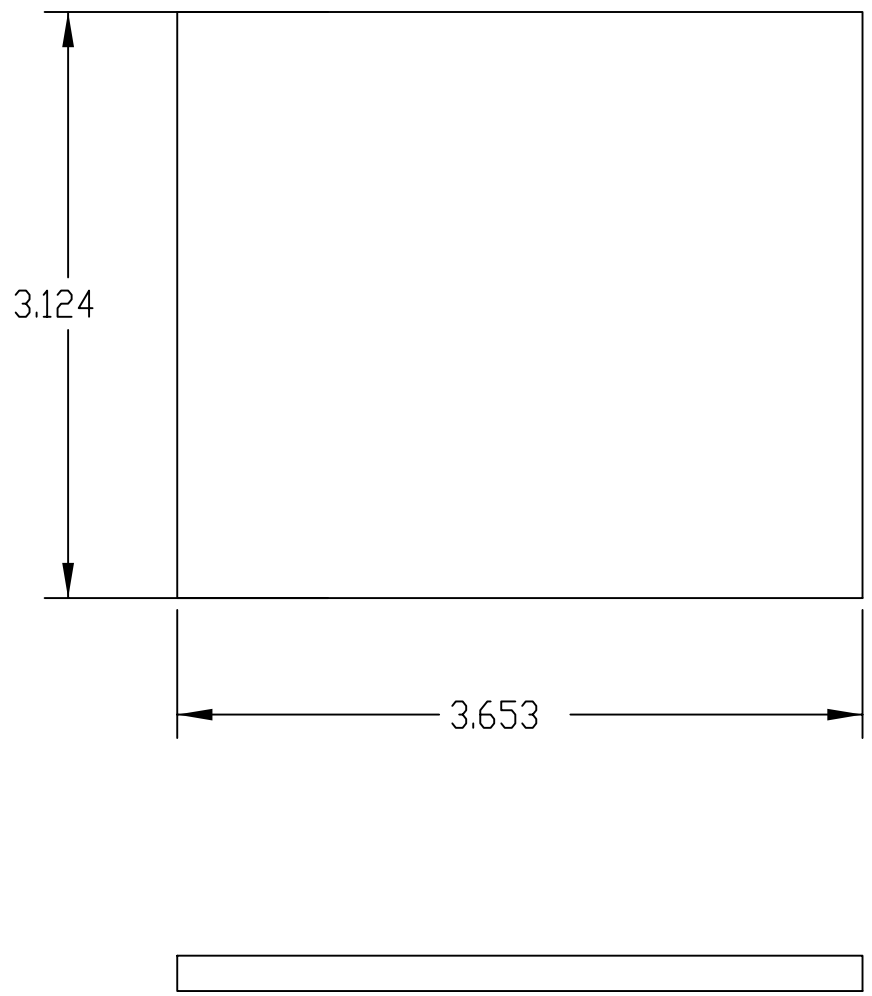

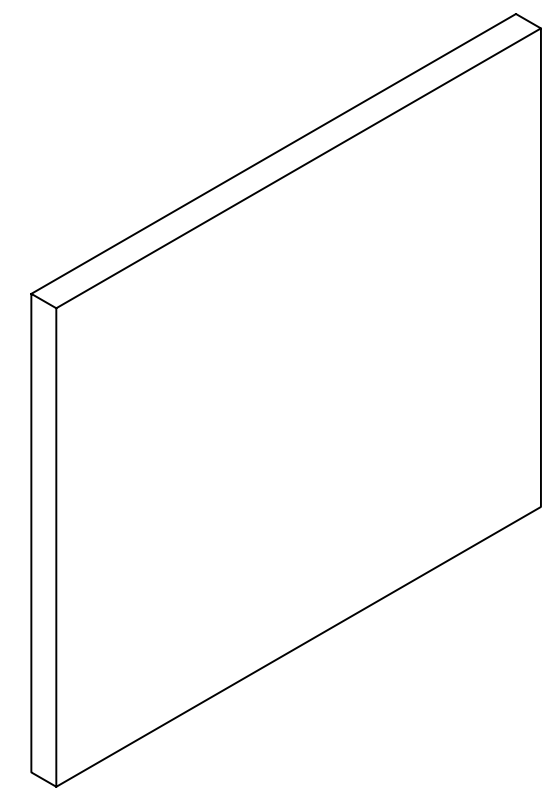

COPYRIGHT © TIAX LLC 2006

D0292-0019	CRASH TABLE
NEXT ASSY	USED ON
APPLICATION	

UNLESS OTHERWISE SPECIFIED DIMENSIONS ARE INCHES. TOLERANCES ARE:
DECIMALS .X ± .020 ANGLES ± 1°
.XX ± .010
.XXX ± .005

MATERIAL
A572-65 STEEL
D9 THICK

FINISHED SURFACES 63
BREAK SHARP CORNERS .010

THIRD ANGLE PROJECTION

DO NOT SCALE DRAWING

APPROVALS		DATE
DRAWN	D. NEDDER	12-OCT-05
CHECKED		
ENGR		
APPROV		
CASE	D0292	

TIAX
CAMBRIDGE, MASSACHUSETTS 02140

I-BEAM RIB

SIZE	CAGE CODE	DRAWING NO.	REV
B	1YHY2	D0292-0029	-
SCALE	1/1	1 of 1	

X6300-GOV-IN-BSIZE-REV0

D0292-0029

REVISION HISTORY				
ZONE	REV	DESCRIPTION	DATE	APPROVED
	-	INITIAL RELEASE	21-DEC-05	D.M.
B2	01	20.00 WAS 21.00	11-JAN-06	D.M.
	02	CHANGED DIMENSIONS TO FRACTIONS	10-FEB-06	D.M.
	03	NEOPRENE WAS POLYCARBONATE		

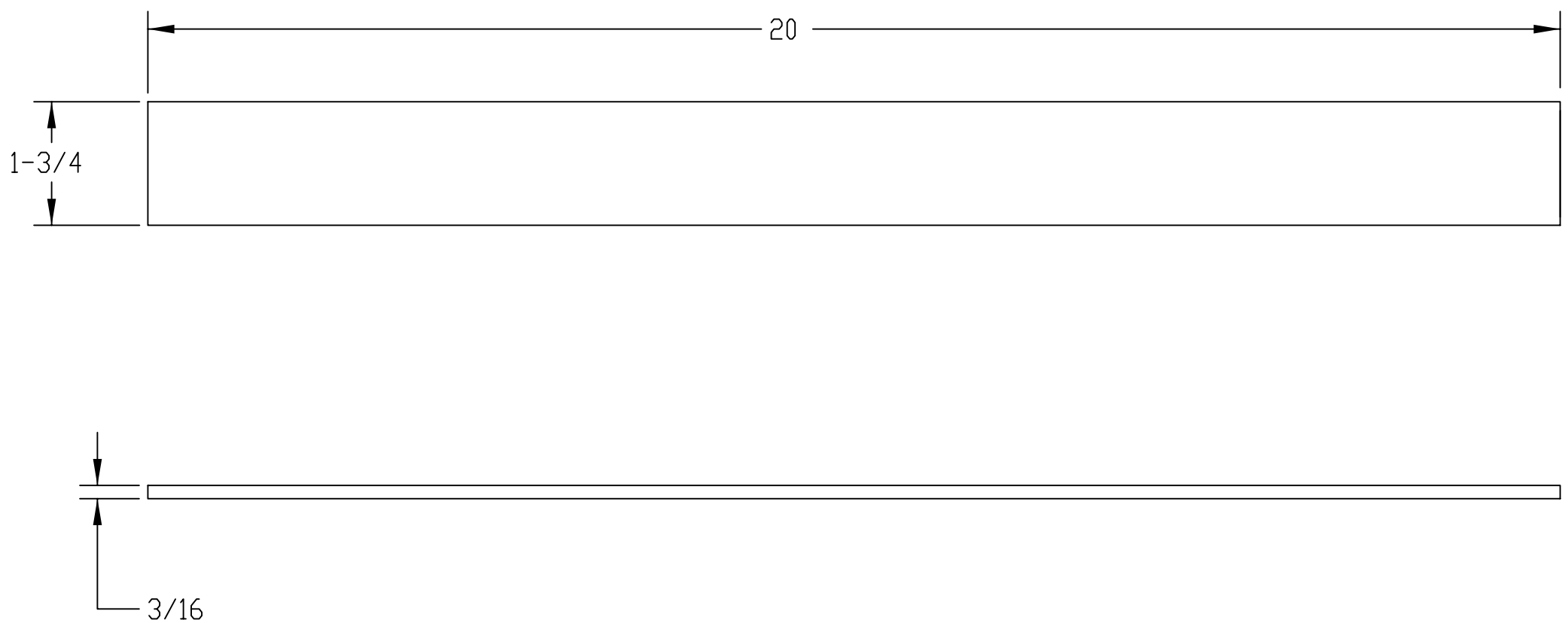

D0292-0002	CRASH TABLE
NEXT ASSY	USED ON
APPLICATION	

UNLESS OTHERWISE SPECIFIED DIMENSIONS ARE INCHES. TOLERANCES ARE:
DECIMALS .X ± .020 ANGLES ± 1°
.XX ± .010
.XXX ± .005

MATERIAL
NEOPRENE

FINISHED SURFACES 63
BREAK SHARP CORNERS .010

THIRD ANGLE PROJECTION

DO NOT SCALE DRAWING

APPROVALS		DATE
DRAWN	D. NEDDER	13-OCT-05
CHECKED		
ENGR		
APPROV	D. MCKEOWN	21-DEC-05
CASE	D0292	

TIAX
CAMBRIDGE, MASSACHUSETTS 02140

FILLER STRIP 1

SIZE	CAGE CODE	DRAWING NO.	REV
B	1YHY2	D0292-0030	03
SCALE	1/2	1 of 1	

COPYRIGHT © TIAX LLC 2006

X6300-GOV-IN-BSIZE-REV0

D0292-0030

REVISION HISTORY				
ZONE	REV	DESCRIPTION	DATE	APPROVED
	-	INITIAL RELEASE	21-DEC-05	D.M.
B2	01	14.715 WAS 13.715	11-JAN-06	D.M.
	02	15 1/2 WAS 14.715 CHANGED DIMENSIONS TO FRACTIONS	10-FEB-06	D.M.
	03	NEOPRENE WAS POLYCARBONATE		

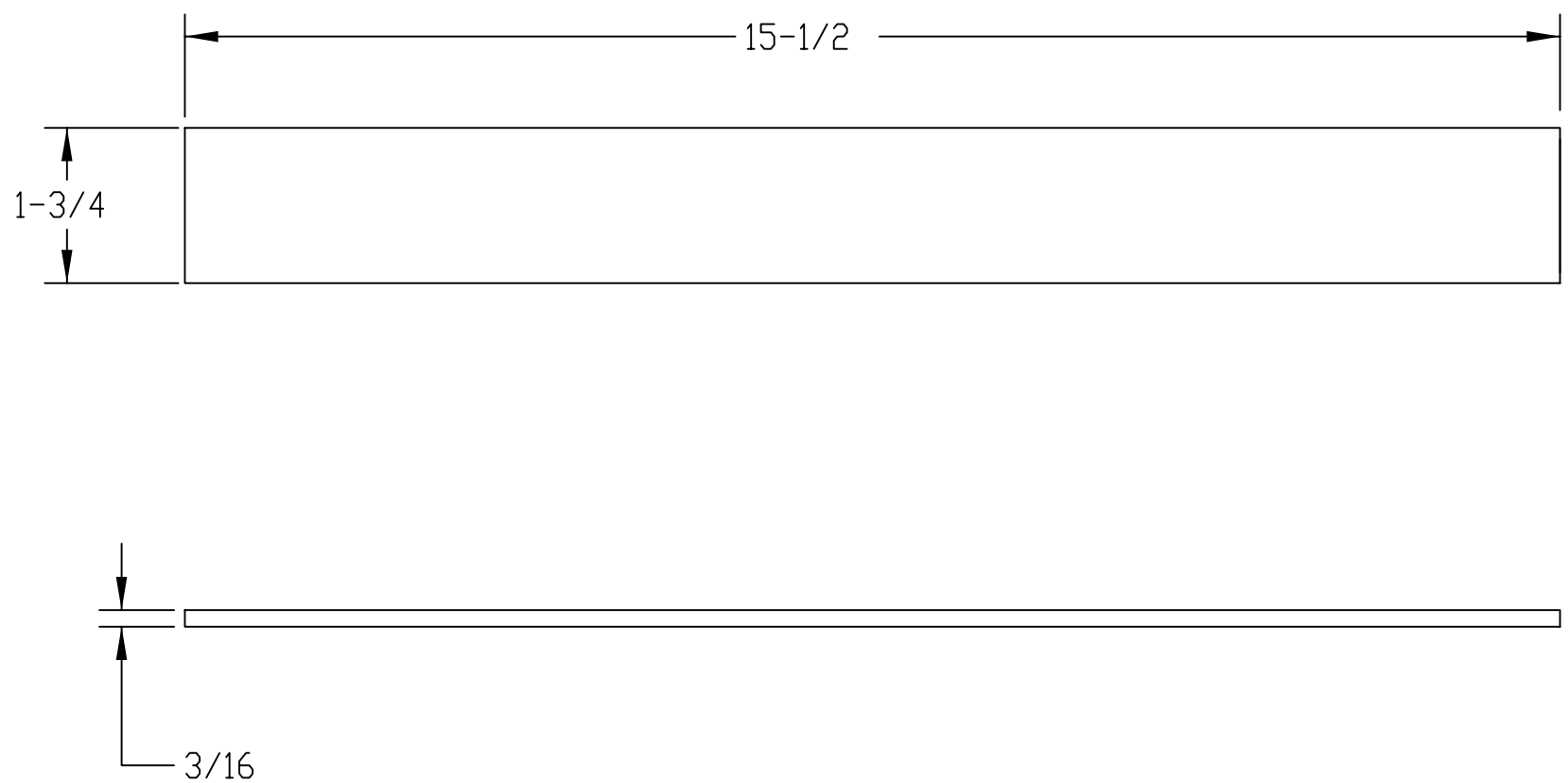

D0292-0002	CRASH TABLE
NEXT ASSY	USED ON
APPLICATION	

UNLESS OTHERWISE SPECIFIED DIMENSIONS ARE INCHES. TOLERANCES ARE:
DECIMALS .X ± .020 ANGLES ± 1°
.XX ± .010
.XXX ± .005

MATERIAL
NEOPRENE

FINISHED SURFACES 63
BREAK SHARP CORNERS .010

THIRD ANGLE PROJECTION

DO NOT SCALE DRAWING

APPROVALS		DATE
DRAWN	D. NEDDER	13-OCT-05
CHECKED		
ENGR		
APPROV	D. MCKEOWN	21-DEC-05
CASE	D0292	

TIAX
CAMBRIDGE, MASSACHUSETTS 02140

FILLER STRIP 2

SIZE	CAGE CODE	DRAWING NO.	REV
B	1YHY2	D0292-0031	03
SCALE	1/2	1 of 1	

COPYRIGHT © TIAX LLC 2006

X6300-GOV-IN-BSIZE-REV0

D0292-0031

REVISION HISTORY				
ZONE	REV	DESCRIPTION	DATE	APPROVED
	-	INITIAL RELEASE		

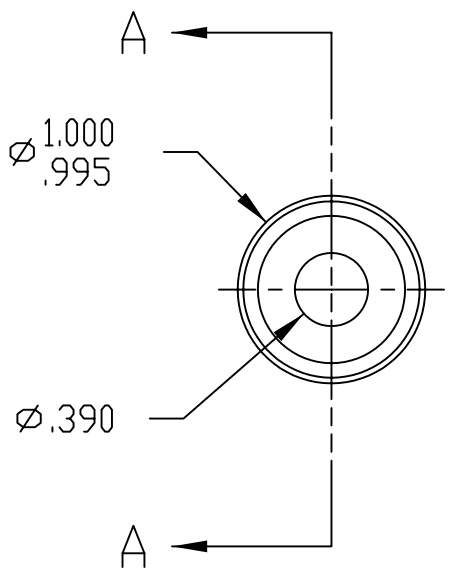

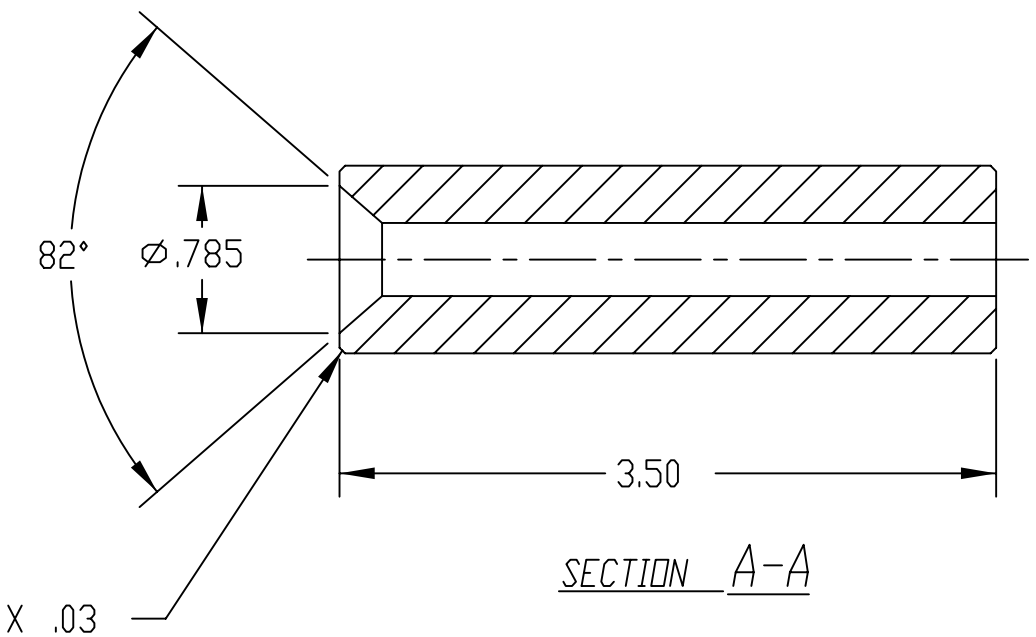

SECTION A-A

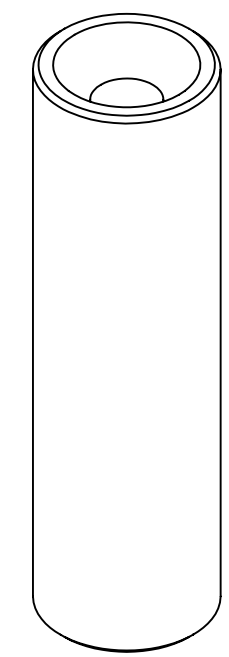

COPYRIGHT © TIAX LLC 2006

D0292-0009	CRASH TABLE
NEXT ASSY	USED ON
APPLICATION	

UNLESS OTHERWISE SPECIFIED DIMENSIONS ARE INCHES. TOLERANCES ARE:
DECIMALS .X ± .020 ANGLES ± 1°
.XX ± .010
.XXX ± .005

MATERIAL
A572-65 STEEL

FINISHED SURFACES 63
BREAK SHARP CORNERS .010

THIRD ANGLE PROJECTION

DO NOT SCALE DRAWING

APPROVALS		DATE
DRAWN	D. NEDDER	09-DEC-05
CHECKED		
ENGR		
APPROV		
CASE	D0292	

TIAX
CAMBRIDGE, MASSACHUSETTS 02140

TUBE SUPPORT

SIZE	CAGE CODE	DRAWING NO.	REV
B	1YHY2	D0292-0034	-
SCALE	1/1	1 of 1	

X6300-GOV-IN-BSIZE-REV0

D0292-0034

REVISION HISTORY				
ZONE	REV	DESCRIPTION	DATE	APPROVED
	-	INITIAL RELEASE	21-DEC-05	D.M.
	01	ADD WELD SYMBOLS, ADD NUT PLATE ASSY		

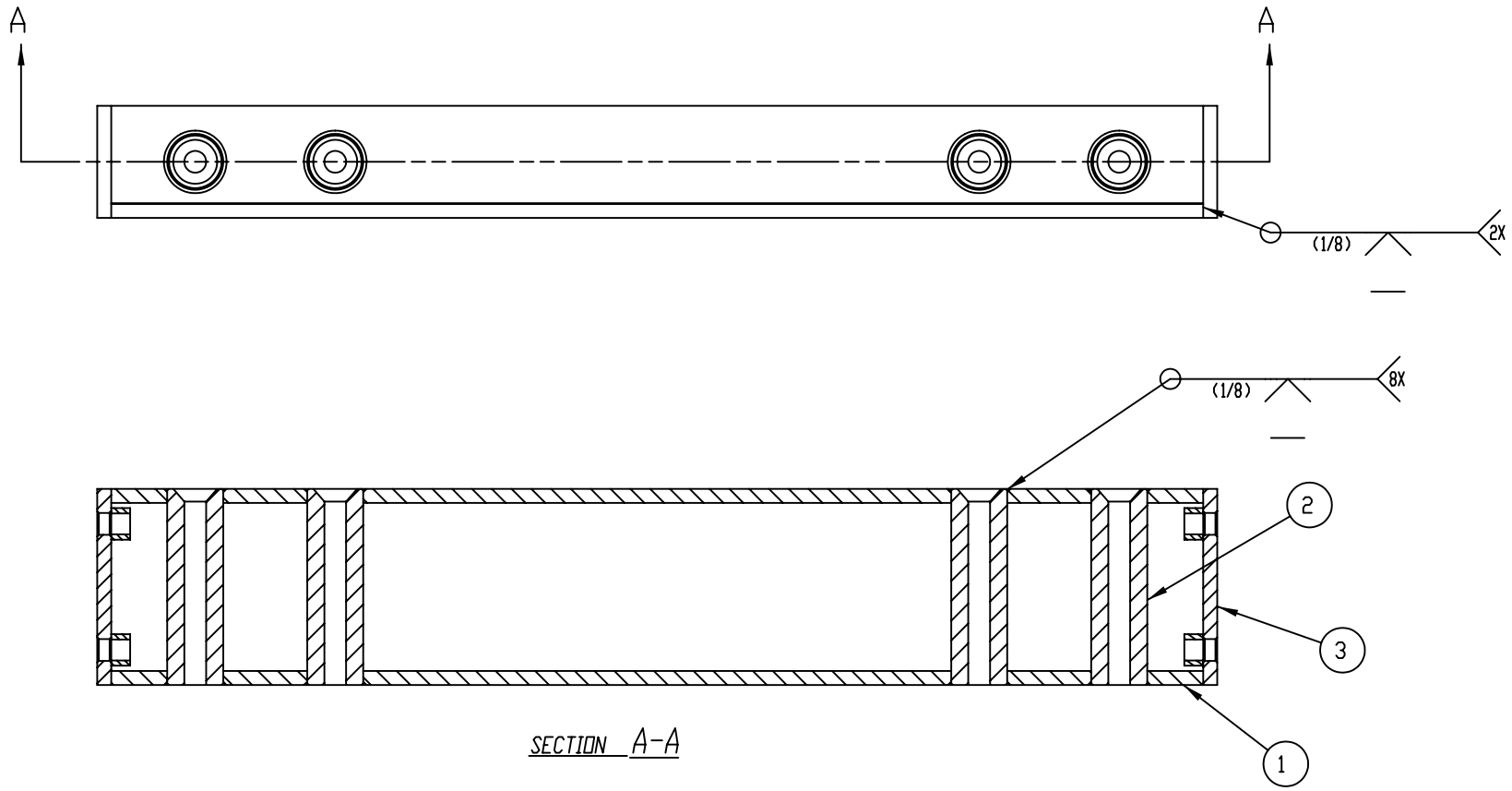

SECTION A-A

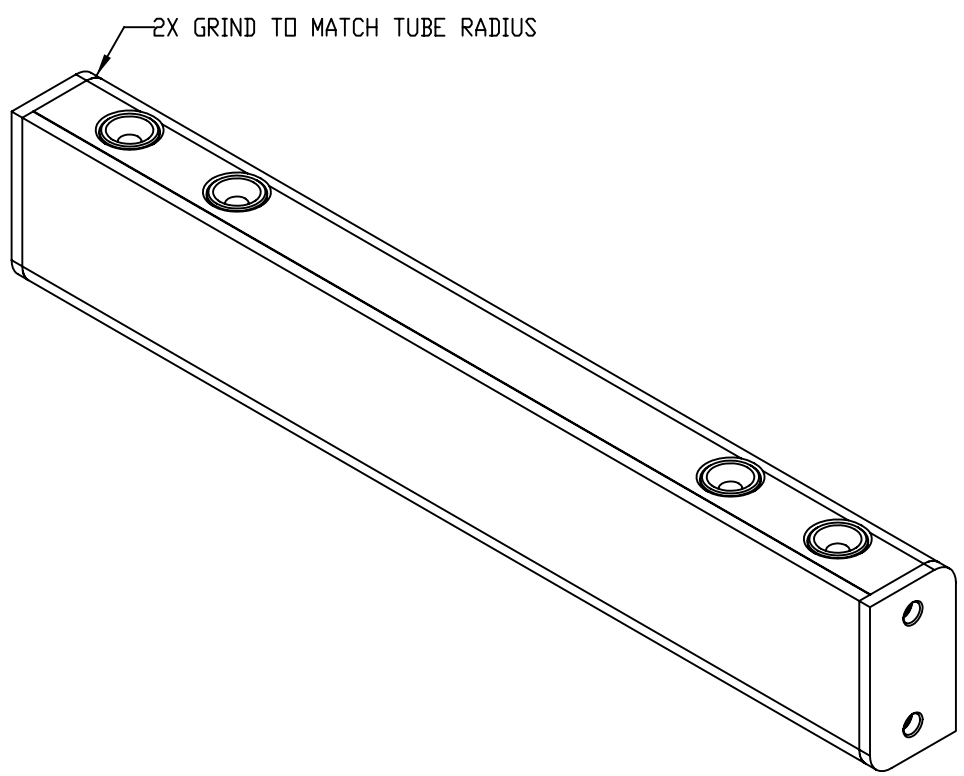

ITEM NO.	QTY REQD	IDENTIFYING NO. OR MILL NAME	NOMENCLATURE OR DESCRIPTION	VENDOR OR MANUFACTURER
3	2	D0292-0036	NUT PLATE ASSEMBLY	
2	4	D0292-0034	TUBE SUPPORT	
1	1	D0292-0006	SIDE WALL, MTG TUBE	

LIST OF PARTS

D0292-0009	CRASH TABLE
NEXT ASSY	USED ON
APPLICATION	

UNLESS OTHERWISE SPECIFIED DIMENSIONS ARE INCHES. TOLERANCES ARE:
DECIMALS .X ± .020 ANGLES ± 1°
.XX ± .010
.XXX ± .005

MATERIAL: SEE LIST OF PARTS

FINISHED SURFACES 63 / BREAK SHARP CORNERS .010

THIRD ANGLE PROJECTION

DO NOT SCALE DRAWING

APPROVALS		DATE
DRAWN	D. NEDDER	15-DEC-05
CHECKED		
ENGR		
APPROV	D. MCKEOWN	21-DEC-05
CASE	D0292	

TIAX
CAMBRIDGE, MASSACHUSETTS 02140

SIDE WALL MOUNTING TUBE ASSEMBLY

SIZE	CAGE CODE	DRAWING NO.	REV
C	1YHY2	D0292-0035	01
SCALE 1/2		1 of 1	

COPYRIGHT © TIAX LLC 2006

REVISION HISTORY				
ZONE	REV	DESCRIPTION	DATE	APPROVED
	-	INITIAL RELEASE	21-DEC-05	D.M.
	01	ADD WELD NOTE		

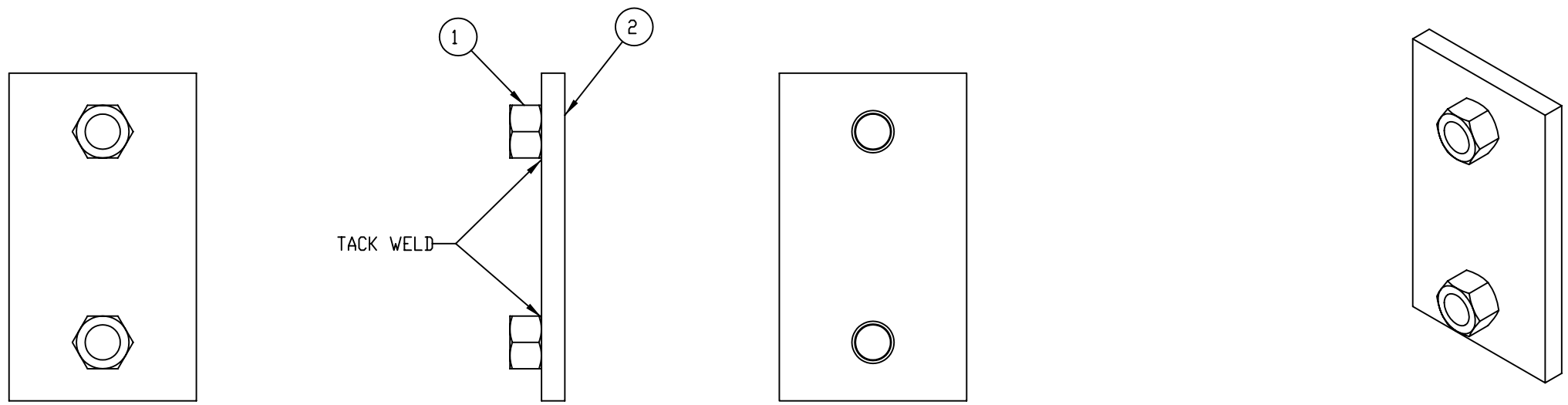

NOTES:

1. WELD NUTS TO PLATE IN SHOWN ORIENTATION

COPYRIGHT © TIAX LLC 2006

ITEM NO.	QTY REQD	IDENTIFYING NO. OR MILL NAME	NOMENCLATURE OR DESCRIPTION	VENDOR OR MANUFACTURER
2	1	D0292-0010	END CAP, SIDE WALL MTG TUBE	
1	2	90499A031	3/8-16 HEX NUT, GRADE 8	MCMASTER-CARR

LIST OF PARTS

NEXT ASSY	USED ON
D0292-0035	CRASH TABLE

APPLICATION

UNLESS OTHERWISE SPECIFIED DIMENSIONS ARE INCHES. TOLERANCES ARE:
DECIMALS .X ± .020 .XX ± .010 .XXX ± .005 ANGLES ± 1°

MATERIAL: SEE LIST OF PARTS

FINISHED SURFACES 63 / BREAK SHARP CORNERS .010

THIRD ANGLE PROJECTION

DO NOT SCALE DRAWING

APPROVALS		DATE
DRAWN	D. NEDDER	09-DEC-05
CHECKED		
ENGR		
APPROV	D. MCKEOWN	21-DEC-05
CASE	D0292	

TIAX
CAMBRIDGE, MASSACHUSETTS 02140

NUT PLATE ASSEMBLY

SIZE	CAGE CODE	DRAWING NO.	REV
C	1YHY2	D0292-0036	01
SCALE 1/1		1 of 1	

D0292-0036 01

X6300-GDV-IN-CSIZE-REV0

D0292-0036

REVISION HISTORY				
ZONE	REV	DESCRIPTION	DATE	APPROVED
	-	INITIAL RELEASE	21-DEC-05	D.M.
	01	ADD MOUNTING HOLES	17-JAN-06	D.M.
	02	.250 THICK WAS .188, Ø.531 WAS Ø.516		

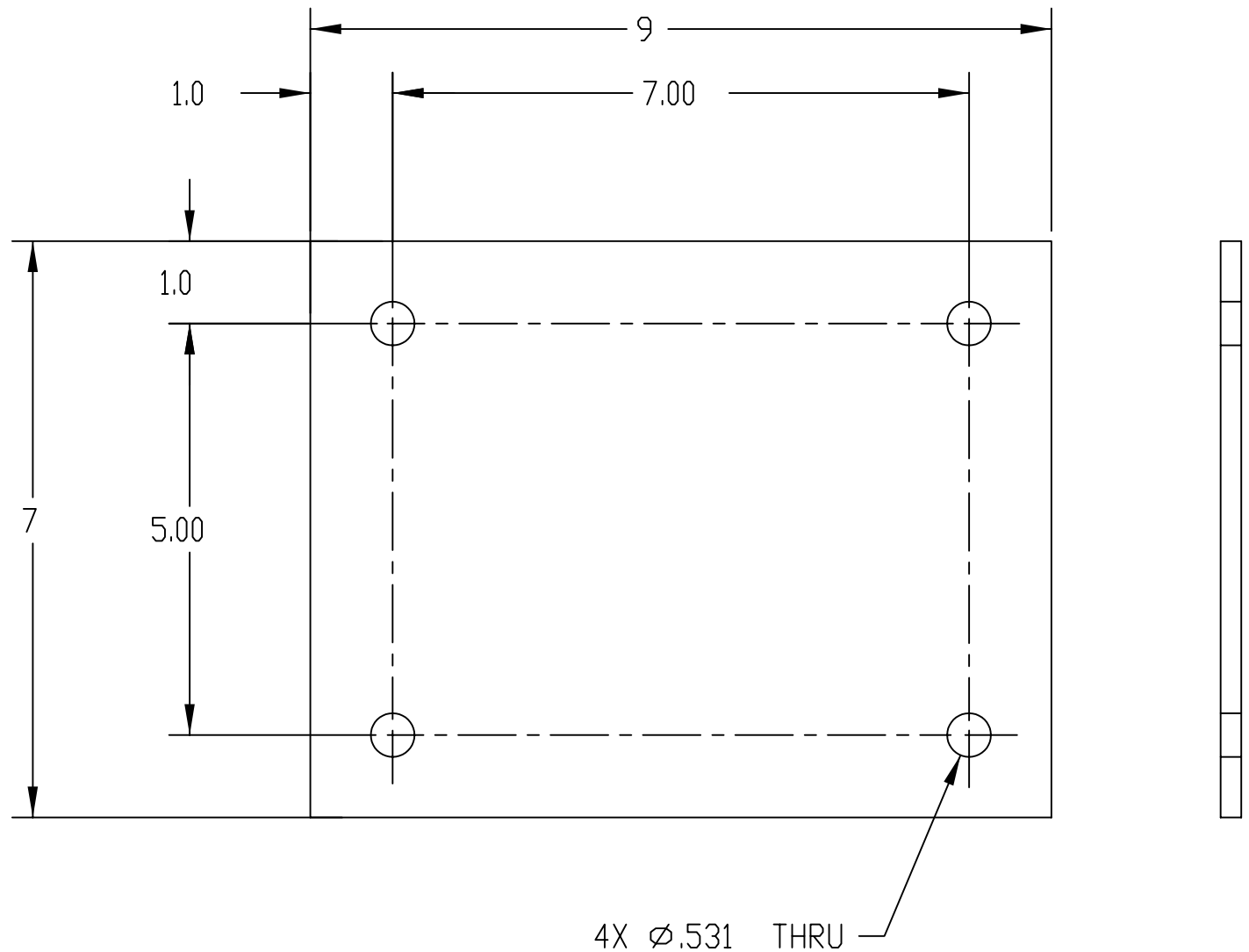

D0292-0016	CRASH TABLE
NEXT ASSY	USED ON
APPLICATION	

UNLESS OTHERWISE SPECIFIED DIMENSIONS ARE INCHES. TOLERANCES ARE:
DECIMALS .X ± .020 ANGLES ± 1°
.XX ± .010
.XXX ± .005

MATERIAL
A572-65 STEEL
.250 THICK

FINISHED SURFACES 63
BREAK SHARP CORNERS .010

THIRD ANGLE PROJECTION

DO NOT SCALE DRAWING

APPROVALS		DATE
DRAWN	D. NEDDER	11-DEC-05
CHECKED		
ENGR		
APPROV	D. MCKEOWN	21-DEC-05
CASE	D0292	

TIAX
CAMBRIDGE, MASSACHUSETTS 02140

LOWER MOUNTING PLATE

SIZE	CAGE CODE	DRAWING NO.	REV
B	1YHY2	D0292-0037	02
SCALE	1/2	1 of 1	

COPYRIGHT © TIAX LLC 2006

X6300-GOV-IN-BSIZE-REV0

D0292-0037

REVISION HISTORY				
ZONE	REV	DESCRIPTION	DATE	APPROVED
	-	INITIAL RELEASE	21-DEC-05	D.M.
A2	01	1.93 WAS 1.75	11-JAN-06	D.M.
	02	CHANGE TO FRACTION DIMENSIONS 1 11/16 WAS 1.75, 1 3/8 WAS 1.93	10-FEB-06	D.M.
	03	COMBINED PARTS D0292-0040 & D0292-0041		

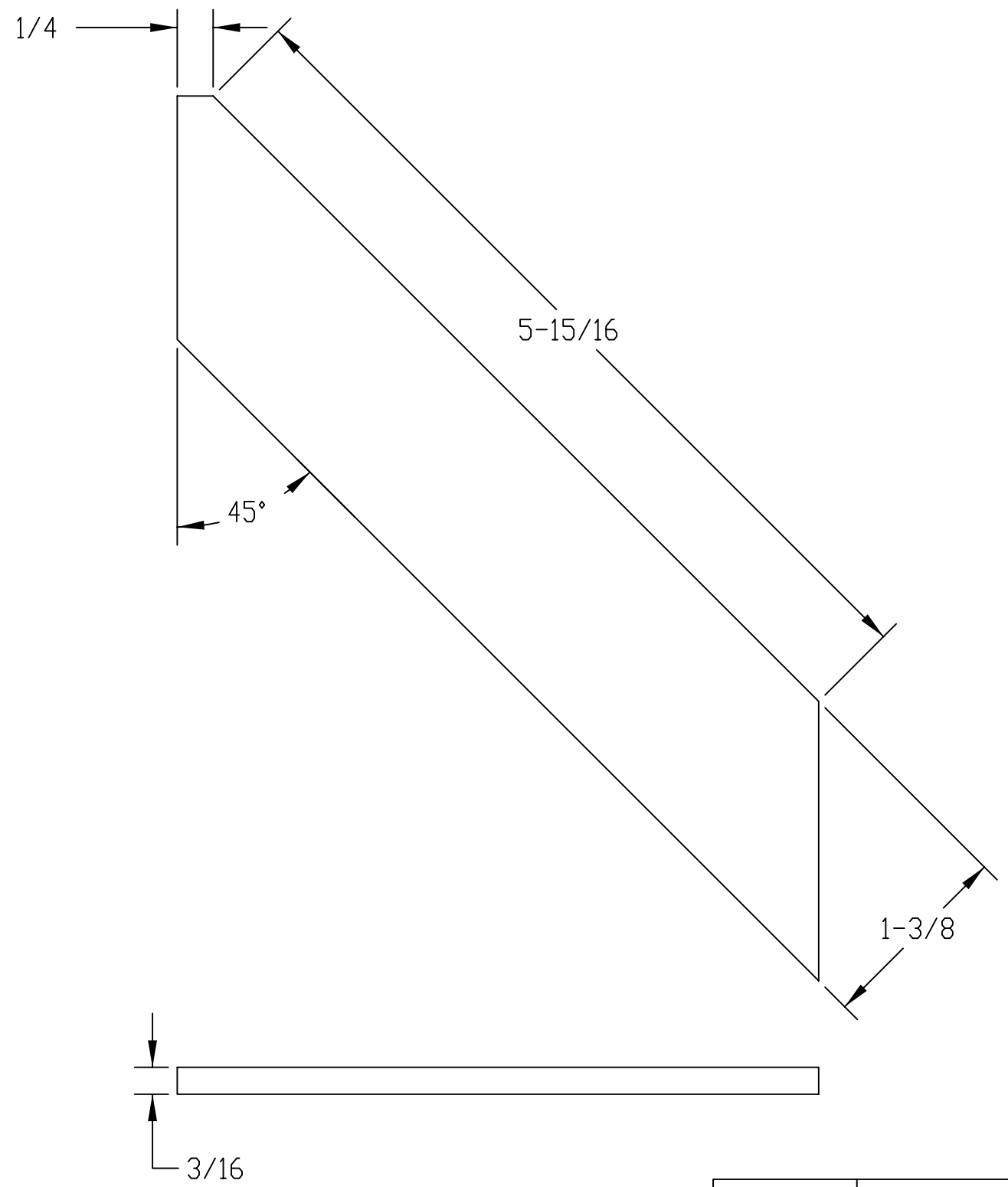

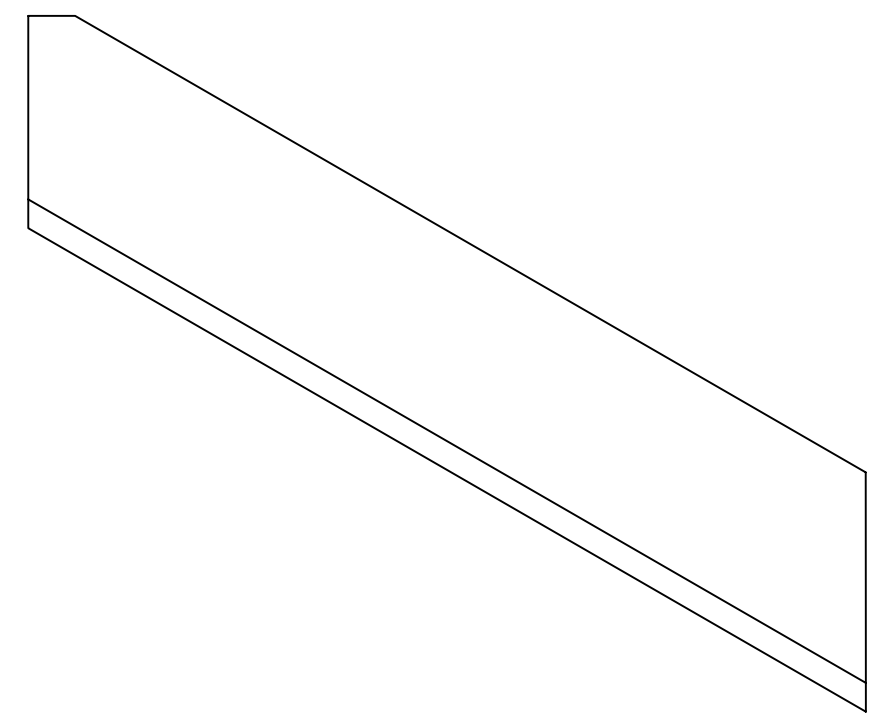

COPYRIGHT © TIAX LLC 2006

D0292-0002	CRASH TABLE
NEXT ASSY	USED ON
APPLICATION	

UNLESS OTHERWISE SPECIFIED DIMENSIONS ARE INCHES. TOLERANCES ARE:
DECIMALS .X ± .020 ANGLES ± 1°
.XX ± .010
.XXX ± .005

MATERIAL
NEOPRENE

FINISHED SURFACES 63
BREAK SHARP CORNERS .010

THIRD ANGLE PROJECTION

DO NOT SCALE DRAWING

APPROVALS		DATE
DRAWN	D. NEDDER	13-OCT-05
CHECKED		
ENGR		
APPROV	D. MCKEOWN	21-DEC-05
CASE	D0292	

TIAX
CAMBRIDGE, MASSACHUSETTS 02140

FILLER STRIP 3

SIZE	CAGE CODE	DRAWING NO.	REV
B	1YHY2	D0292-0040	03
SCALE 1/1		1 of 1	

X6300-GOV-IN-BSIZE-REV0

D0292-0040

REVISION HISTORY				
ZONE	REV	DESCRIPTION	DATE	APPROVED
	-	INITIAL RELEASE		

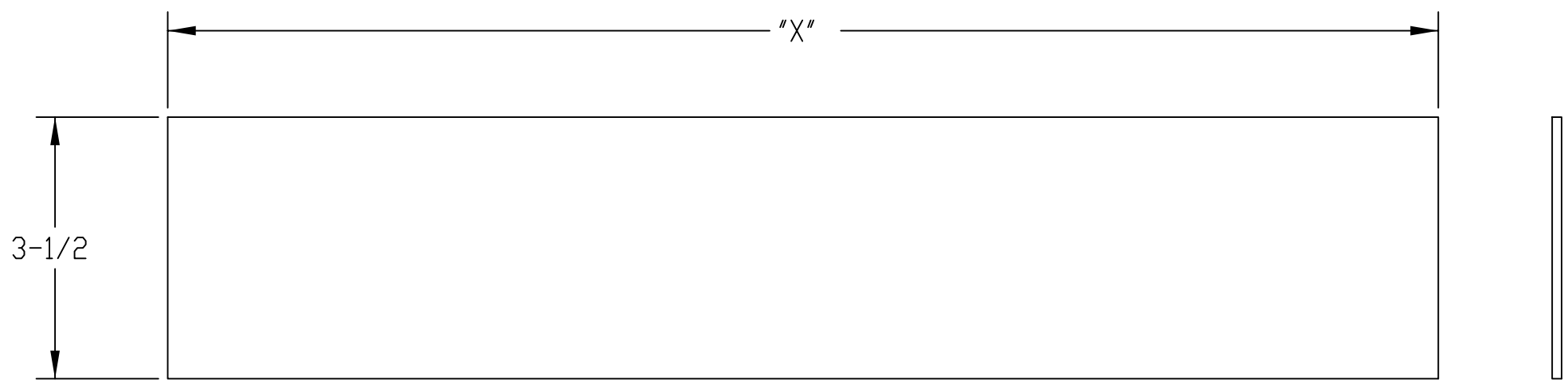

PART NUMBER	"X"
D0292-0043-1	17
D0292-0043-2	20-1/2
D0292-0043-3	24

NOTES:

1. MATERIAL: 1/8" NEOPRENE
   MAKE FROM MCMASTER-CARR PART NUMBER 8568K523

D0292-0002	CRASH TABLE
NEXT ASSY	USED ON
APPLICATION	

UNLESS OTHERWISE SPECIFIED DIMENSIONS ARE INCHES. TOLERANCES ARE:
DECIMALS .X ± .020 ANGLES ± 1°
.XX ± .010
.XXX ± .005

MATERIAL: SEE NOTES

FINISHED SURFACES 63
BREAK SHARP CORNERS .010

THIRD ANGLE PROJECTION

DO NOT SCALE DRAWING

APPROVALS		DATE
DRAWN	DAVID NEDDER	09-FEB-06
CHECKED		
ENGR		
APPROV		
CASE	D0292	

TIAX
CAMBRIDGE, MASSACHUSETTS 02140

EDGE GUARD, SIDE

SIZE	CAGE CODE	DRAWING NO.	REV
B	1YHY2	D0292-0043	-
SCALE	1/2	1 of 1	

COPYRIGHT © TIAX LLC 2006

REVISION HISTORY				
ZONE	REV	DESCRIPTION	DATE	APPROVED
	-	INITIAL RELEASE		

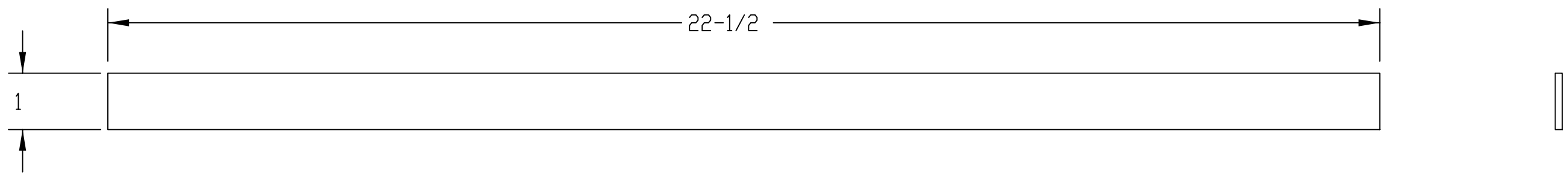

NOTES:

1. MATERIAL: 1/8" NEOPRENE
   MAKE FROM MCMASTER-CARR PART NUMBER 8568K523

D0292-0002	CRASH TABLE
NEXT ASSY	USED ON
APPLICATION	

UNLESS OTHERWISE SPECIFIED DIMENSIONS ARE INCHES. TOLERANCES ARE:
DECIMALS .X ± .020 ANGLES ± 1°
.XX ± .010
.XXX ± .005

MATERIAL: SEE NOTES

FINISHED SURFACES 63
BREAK SHARP CORNERS .010

THIRD ANGLE PROJECTION

DO NOT SCALE DRAWING

APPROVALS		DATE
DRAWN	DAVID NEDDER	09-FEB-06
CHECKED		
ENGR		
APPROV		
CASE	D0292	

TIAX
CAMBRIDGE, MASSACHUSETTS 02140

EDGE GUARD, TOP

SIZE	CAGE CODE	DRAWING NO.	REV
B	1YHY2	D0292-0044	-
SCALE	1/2	1 of 1	

COPYRIGHT © TIAX LLC 2006

X6300-GOV-IN-BSIZE-REV0

D0292-0044

REVISION HISTORY				
ZONE	REV	DESCRIPTION	DATE	APPROVED
	-	INITIAL RELEASE		

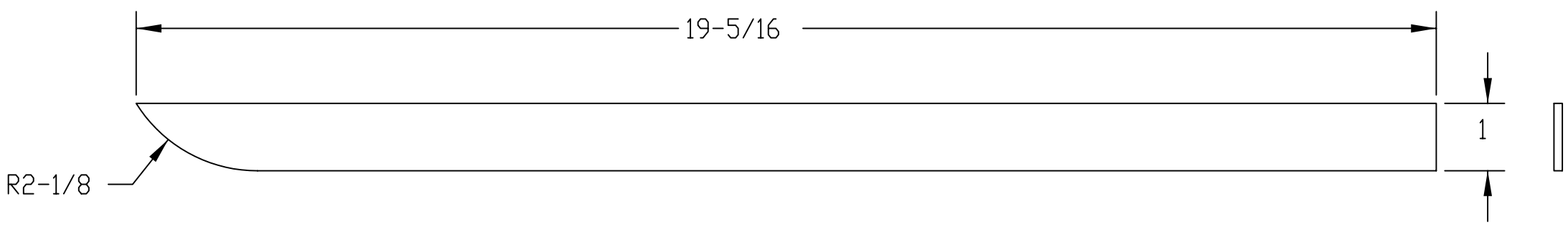

NOTES:

1. MATERIAL: 1/8" NEOPRENE
   MAKE FROM MCMASTER-CARR PART NUMBER 8568K523
2. CUT RADIUS AFTER ASSEMBELED

COPYRIGHT © TIAX LLC 2006

D0292-0002	CRASH TABLE
NEXT ASSY	USED ON
APPLICATION	

UNLESS OTHERWISE SPECIFIED DIMENSIONS ARE INCHES. TOLERANCES ARE:
DECIMALS .X ± .020 ANGLES ± 1°
.XX ± .010
.XXX ± .005

MATERIAL: SEE NOTES

FINISHED SURFACES 63
BREAK SHARP CORNERS .010

THIRD ANGLE PROJECTION

DO NOT SCALE DRAWING

APPROVALS		DATE
DRAWN	DAVID NEDDER	09-FEB-06
CHECKED		
ENGR		
APPROV		
CASE	D0292	

TIAX
CAMBRIDGE, MASSACHUSETTS 02140

EDGE GUARD, TOP

SIZE	CAGE CODE	DRAWING NO.	REV
B	1YHY2	D0292-0045	-
SCALE	1/2	1 of 1	

X6300-GOV-IN-BSIZE-REV0

D0292-0045

REVISION HISTORY				
ZONE	REV	DESCRIPTION	DATE	APPROVED
	-	INITIAL RELEASE		

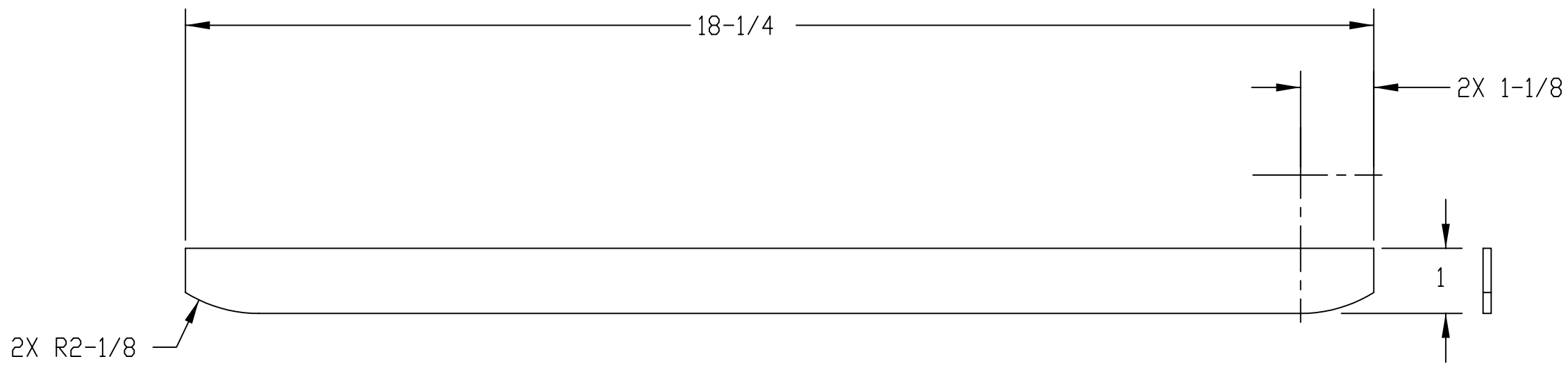

NOTES:

1. MATERIAL: 1/8" NEOPRENE
   MAKE FROM MCMASTER-CARR PART NUMBER 8568K523
2. CUT RADIUS AFTER ASSEMBELED.

COPYRIGHT © TIAX LLC 2006

NEXT ASSY	USED ON
D0292-0002	CRASH TABLE

APPLICATION

UNLESS OTHERWISE SPECIFIED DIMENSIONS ARE INCHES. TOLERANCES ARE:
DECIMALS .X ± .020 ANGLES ± 1°
.XX ± .010
.XXX ± .005

MATERIAL: SEE NOTES

FINISHED SURFACES 63
BREAK SHARP CORNERS .010

THIRD ANGLE PROJECTION

DO NOT SCALE DRAWING

APPROVALS		DATE
DRAWN	DAVID NEDDER	09-FEB-06
CHECKED		
ENGR		
APPROV		
CASE	D0292	

TIAX
CAMBRIDGE, MASSACHUSETTS 02140

EDGE GUARD, TOP

SIZE	CAGE CODE	DRAWING NO.	REV
B	1YHY2	D0292-0046	-
SCALE	1/2	1 of 1	

X6300-GOV-IN-BSIZE-REV0

D0292-0046