STATE	PROJECT	SHEET NUMBER

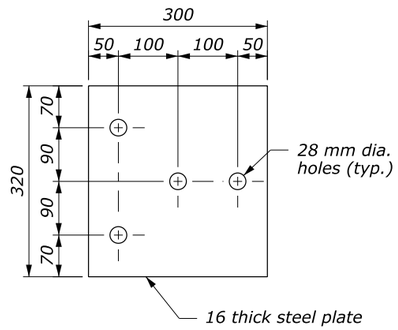

BEARING PLATE

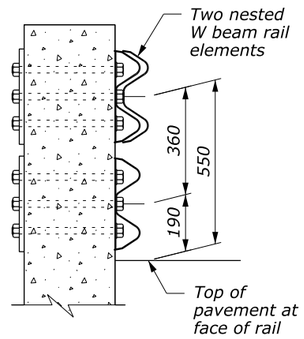

SECTION A-A

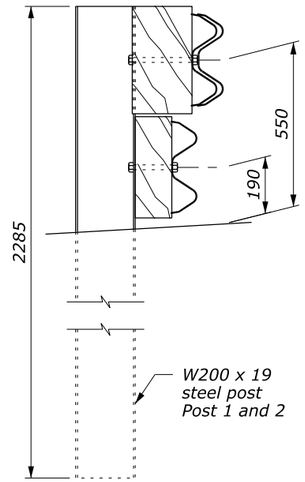

SECTION B-B

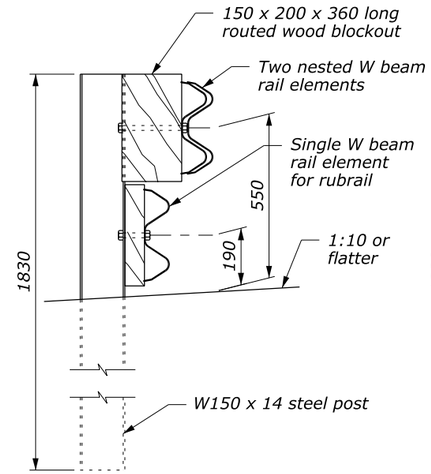

SECTION C-C

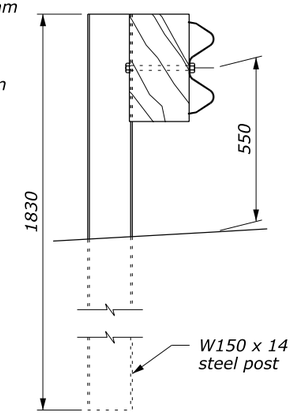

SECTION D-D

NOTE:

1. The rubrail may be shop bent in the last 950 mm to facilitate installation.
2. Offset drill wood blocks for rubrail to sit squarely on the post flange posts 1 through 4. Secure blocks to post 1 through 3 with M16 carriage bolts.
3. Posts 1, 2, 3, 4 and 6 require an additional hole to attach lower wood blocks and/or the rubrail.
4. Do not bolt nested W beam or rubrail W beam to posts and blocks on posts 1, 2, 3 and 5. Bolt blocks directly to posts.
5. Reinforced concrete wall or bridge parapet must be capable of developing a 265 kN pull out strength.
6. Furnish hardware in the metric sizes shown. Equivalent US Customary sizes may be used when metric sizes are unavailable.
7. Dimensions without units are millimeters.

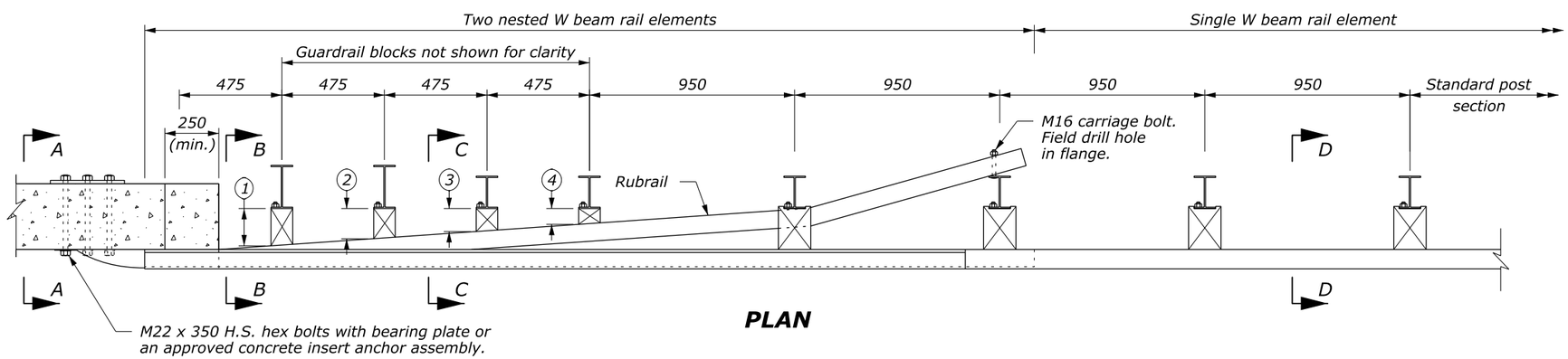

PLAN

WOOD BLOCKS FOR RUBRAIL		
POST	THICKNESS 1	THICKNESS 2
1	164	158
2	131	125
3	99	93
4	67	61
5	NO BLOCK	NO BLOCK

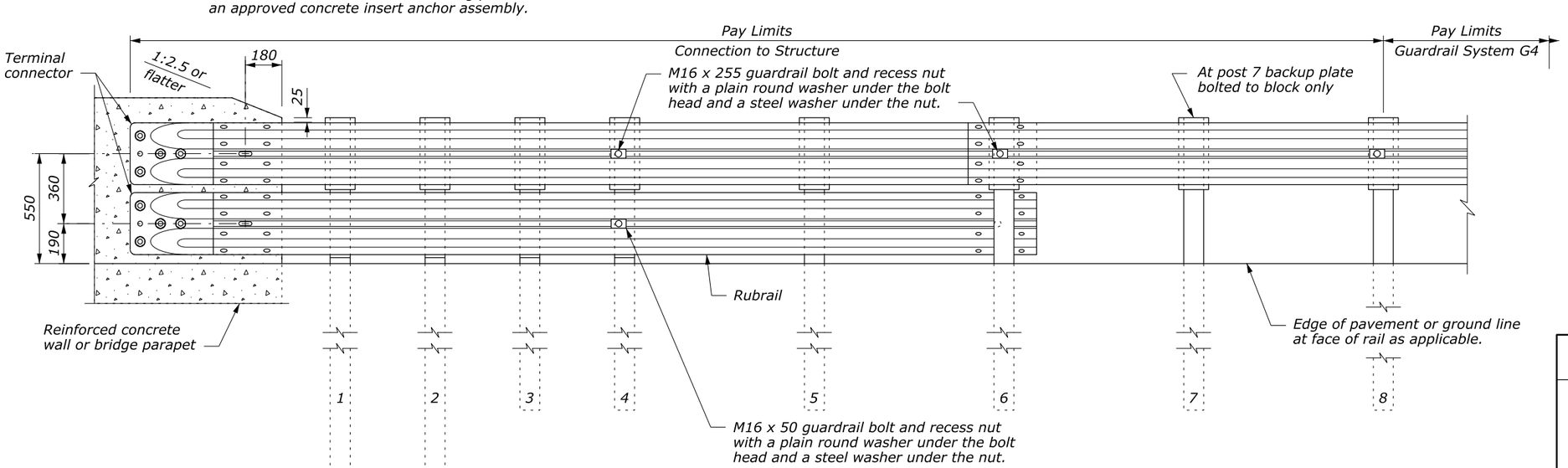

ELEVATION

NO SCALE

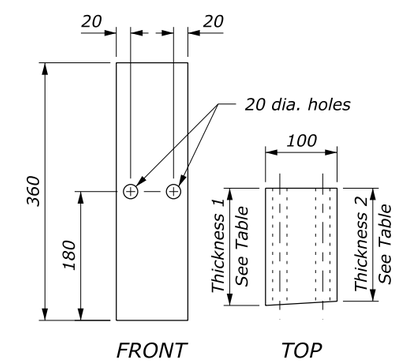

WOOD BLOCK FOR RUBRAIL

U.S. DEPARTMENT OF TRANSPORTATION
FEDERAL HIGHWAY ADMINISTRATION
FEDERAL LANDS HIGHWAY

METRIC STANDARD

G4 W-BEAM GUARDRAIL CONNECTION TO VERTICAL FACE STRUCTURE STEEL POSTS

STANDARD APPROVED FOR USE 3/1996

REVISED: 1/1998
DRAFT: 9/2013

STANDARD M617-26

30 September 2013 1:09 PM c:\myfiles\pw_production\dms6748?\Standard_617-26.DRAFT.dgn [Metric]