Texas Department of Transportation
Book 2 - Technical Provisions

IH 35E Managed Lanes Project

Attachment 2-1
Project Management Plan Contents

Attachment 2-1 – Project Management Plan Contents

The Project Management Plan Contents and Schedule for provision of the component parts.

Legend:
A = Submitted by Developer within 30 days of NTP 1 and approved by TxDOT prior to Commencement of Design and issuance of NTP 2
B = Submitted by Developer within 90 days of NTP 1 and approved by TxDOT prior to Commencement of Construction

Part	Ref	Section	Contents	Required by
1. Project Administration				
	1.1	Organization	Orginazation diagram	A
	1.2	Personnel	Names and contract details, titles, and job roles	A
	1.3	Contractors	Procedures to establish how the Developer will manage Contractors	A
	1.4	Schedule	Project Baseline Schedule in accordance with the Technical Provision Section 2	A
	1.5	Quality Control	Procedures to establish and encourage continuous improvement	A
	1.6	Audit	Procedures to facilitate review and audit by TxDOT and/or the Independent Reviewers	A
			Auditing and management review of Developer's own activities under the PMP	A
			Auditing and management review of Contractor's activities and management procedures	A
	1.7	PMP Update	Procedures for preparation of amendments and submission of amendments to any part of the PMP	A
	1.8	Document Management	The manner in which records will be maintained in compliance with the Technical Provisions, including any specific systems Developer will use.	A
			Document management procedures in compliance with the Technical Provisions Section 2.	A
			Procedures for documenting all required Plans not specifically stated in this attachment, including but not limited to: Aesthetics and Landscaping Plan, ITS Implementation Plan, Haul Route Plan, Maintenance Management Plan (MMP), Emergency Response Plan, etc	B
2. Quality Management Plan				
2A. Design Quality Management				
	2A.1	Organization	Developer's main contractural arrangements	A
			Organizational structure covering the activities to be performed in accordance with the Contract Documents	A
	2A.2	Personnel	Resource Plan for the Developer and its subcontractors	A

2. Quality Management Plan				
2A. Design Quality Management				
	2A.2	Personnel	Arrangements for coordinating and managing staff interaction with TxDOT and its consultants including collocation of Key Personnel and description of approach to coordinating work of off-site personnel	A
			Names and contact details, titles, job roles and specific experience required for the Key Personnel and for other principal personnel during the period of Design Work	A
			Names and contact details, titles, job roles and specific experience required for the principal personnel for Contractors and any third party with which Developer will coordinate activities.	A
	2A.3	Offices and equipment	Description of the necessary offices and office equipment to be provided by Developer during the period of Design Work	A
	2A.4	Contractors	Overall control procedures for Contractors, including consultants and Subconsultants	A
			Responsibility of Contractors and Affiliates	A
			Steps taken to ensure Contractors and Suppliers meet the obligations imposed by their respective Contracts	A
	2A.5	Interfaces	Interfacing between the Developer, Contractors and the Independent certifiers during the period of Design Work	A
			Coordination with Utility Owners	A
	2A.6	Environmental	Integration of the interface between environmental requirements (including landscaping) and the design of the Project	A
	2A.7	Procedures	Procedures describing how the principal activities will be performed during the design stage: to include geotechnical site investigation, surveys and mapping, environmental management, safety audit, structural audit, and checking	A
	2A.8	Quality Control	Quality Management Plan (QMP), including control procedures including a resource table for monitoring and auditing all design services, design review and certification, and verification of plans	A
			Procedures for environmental compliance	A
			Procedures to establish Developer's hold points in the design process at which checking and review will take place	A
			Procedures to ensure accuracy, completion, and quality in submittals to TxDOT, Governmental Entities and other third parties.	A
			Procedures to establish and encourage continuous improvement	A
	2A.9	Audit	Name of Developer's representative(s) with defined authority for establishing, maintaining, auditing and reporting on the PMP	A
			Name, title, roles and responsibilities of supporting quality management staff reporting to the person with defined authority	A
	2A.10	Document Management	The manner in which records will be maintained in compliance with the Technical Provisions, including any specific systems Developer will use	A
			Document management procedures in compliance with the Technical Provisions Section 2	A
			Identify environmental documentation and reporting requirements, including Environmental Permits, Issues and Commitments (EPIC) sheets	A

2B. Construction Quality Management				
	2B.1	Organization	Developer's main contractual arrangements	A
			Organizational structure covering the activities to be performed in accordance with the Contract Documents	A
	2B.2	Personnel	Resource Plan for the Developer and its Contractors	B
			Arrangements for coordinating and managing staff interaction with TxDOT and its consultants including collocation of Key Personnel and description of approach to coordinating work of off-site personnel	B
			Names and contact details, titles, job roles and specific experience required for the Key Personnel as related to construction	A
			Names and contact details, titles, job roles of principal personnel for Contractors and any third party with which Developer will coordinate his activities	B
			Procedures for implementation of the Environmental Protection Training Plan (EPTP) for all employees in accordance with the Technical Provisions Section 4	B
	2B.3	Offices and equipment	Description of the necessary offices and office equipment to be provided by Developer during construction	A
	2B.4	Contractors	Overall control procedures for Contractors, including consultants and subconsultants	B
			Responsibility of Contractors and affiliates	B
			Steps taken to ensure Contractors and Suppliers meet the obligations imposed by their respective Contracts	B
			Procedures for implementation of Environmental Protection Training Plan (EPTP) for employees of subcontractors in accordance with the Technical Provisions Section 4	B
	2B.5	Interfaces	Interfacing between the Developer, Contractors, including any testing contractor, and the Independent verifiers during construction	A
	2B.6	Procedures	List of Project specific construction procedures	B
			Construction detailed procedure for each major activity whether directly undertaken or subcontracted to include pavement, structures, drainage, communications	B
			Traffic Management Plan	B
	2B.7	Quality Control/ Quality Assurance	Construction Quality Management Plan (CQMP)	B
			Integration of component parts of the Comprehensive Environmental Protection Program (CEPP) into construction quality management	B
			Control, identification and traceability of materials, including any material or samples temporarily or otherwise removed from site for testing or other reasons.	B
			Examinations and audit of Construction Work, review of examination and audit, issue of certificates	B
			Observation and reporting of all tests in compliance with the Technical Provisions Section 2	B
			Procedures for tests and inspections for the purpose of the Contractor certifying that prior to burying, each part of the Works is complete and conforms to the Contract Documents	B
			Quality control procedures including a resource table for monitoring and auditing during construction any work and testing undertaken by Contractors and Suppliers both on and off Site	B

2B. Construction Quality Management (continued)				
	2B.7	Quality Control	Procedures to establish Developer's hold points in construction	B
			Procedures to ensure accuracy, completion, and quality in submittals to TxDOT, Governmental Entities and other third parties	B
			Procedures to establish and encourage continuous improvement	A
	2B.8	Audit	Inspection and test plans that identify the proforma and/or databases to be used for recording the inspection and test results and a methodology for transmitting acceptance testing and inspection reports to TxDOT	B
			Name of Developer's representative with defined authority for establishing, maintaining, auditing and reporting on the PMP	A
			Name, title, roles and responsibilities of supporting quality management staff reporting to the person with defined authority.	B
	2B.9	Document Management	The manner in which records will be maintained in compliance with the Technical Provisions, including any specific systems Developer will use	B
			Document management procedures in compliance with the Technical Provisions Section 2	A
2C. Maintenance Management				
	2C.1	Procedures	Procedures describing how the principal activities will be performed during the maintenance period including the general maintenance and operations obligations	A
			Procedures for managing records of inspection and maintenance activities	A
			Procedures setting out Developer's response to maintenance issues such as mitigation of hazards, and defects that require prompt attention or are a safety concern	A
	2C.2	Performance Standards	Procedures to be followed by Developer pursuant to the Technical Provisions to comply with all applicable maintenance requirements for the term of the Agreement	A
	2C.3	Emergency Response	Procedures setting out how Developer will respond to accidents and incidents on the Project	A
3. Comprehensive Environmental Protection Program (CEPP)				
	3.1	Organization	Developer's main contractural arrangements	A
			Organizational structure covering the activities to be performed in accordance with the Contract Documents	A
			Environmental Contact Tree	A
	3.2	Personnel	Resource Plan for the Developer and its Contractors	B
			Arrangements for coordinating and managing staff interaction with TxDOT and its consultants, including collocation of Key Personnel and description of approach to coordinating work of off-site personnel	A
			Names and contact details, titles, job roles and specific experience required for Key Personnel and for other environmental personnel	A
			Implement Environmental Protection Training Plan (EPTP) for all employees in accordance with the Technical Provisions Section 4	A

3. Comprehensive Environmental Protection Plan (continued)				
	3.3	Contractors	Overall control procedures for Contractors, including consultants and subconsultants	A
			Responsibility of Contractors and Affiliates	A
			Implement Environmental Protection Training Plan (EPTP) for employees of Contractors in accordance with the Technical Provisions Section 4	B
	3.4	Environmental	Establishment of the component parts of the Environmental Compliance Mitigation Program (ECMP)	B
	3.5	Quality Control	Procedures to ensure accuracy, completion, and quality in submittals to TxDOT, Governmental Entities and other third parties	A
			Procedures to establish and encourage continuous improvement	A
			Procedures for environmental compliance	A
	3.6	Audit	Name, title, roles and responsibilities of supporting quality management staff reporting to the person with defined authority	B
	3.7	Document Management	The manner in which records will be maintained in compliance with the Technical Provisions, including any specific systems Developer will use	A
			Identify environmental documentation and reporting requirements	A
4. Public Information and Communications Plan				
	4.1	Organization	Developer's main contractural arrangements	A
			Organizational structure covering the activities to be performed in accordance with the Contract Documents.	A
	4.2	Personnel	Resource Plan for the Developer and its Contractors	A
			Arrangements for coordinating and managing staff interaction with TxDOT and its consultants, including colocation of Key Personnel and description of approach to coordinating work of off-site personnel	A
			Names and contact details, titles, job roles and specific experience required for Key Personnel and for other principal personnel	A
			Names and contact details, titles, job roles of principal personnel for Contractors and any third party with which Developer will coordinate his activities	A
	4.3	Offices and equipment	Description of the necessary offices and office equipment to be provided by Developer during design	A
	4.4	Contractors	Overall control procedures for Contractors, including consultants and subconsultants	A
			Responsibility of Contractors and Affiliates	A
			Steps taken to ensure Contractors and Suppliers meet the obligations imposed by their respective Contracts	A
			Procedures for implementation of EPTP for employees of Contractors	A

4. Public Information and Communications Plan (continued)				
	4.5	Interfaces	Procedures for liaison with the public, the media and other Customer Groups in accordance with the Technical Provisions Section 3 and the press media policy of TxDOT	A
			Procedures to coordinate with Project Stakeholders such as Governmental Entities and other Customer Groups	A
	4.6	Procedures	Procedures describing how the principal activities will be performed	A
	4.7	Quality Control	Quality control procedures including a resource table for monitoring and auditing all public information and communication services	A
			Procedures to ensure accuracy, completion, and quality in submittals to TxDOT, Governmental Entities and Customer Groups	A
	4.7	Quality Control	Procedures to establish and encourage continuous improvement	A
	4.8	Audit	Name of Developer's representatie with defined authority for establishing, maintaining, auditing and reporting on PMP	A
			Name, title, roles and responsibilities of supporting quality management staff reporting to the person with defined authority	A
	4.9	Document Management	The manner in which records will be maintained in compliance with the Technical Provisions, including any specific systems Developer will use	A
			Document management procedures in compliance with the Technical Provisions Section 2	A
5. Safety Plan				
	5.1		Policies, plans, training programs, Work Site controls, and Incident response plans to ensure the health and safety of personnel involved in the Project and the general public affected by the Project	A
	5.2		Procedures for notifying TxDOT of Incidents arising out of or in connection with the performance of the Work	A
6. TxDOT - Developer Communications Plan				
	6.1		The manner in which the Developer's organization will respond to unexpected requests for information, communicate changes or revisions to necessary Developer personnel and notify the affected stakeholders before and after the changes are made.	A
	6.2		Processes and procedures for communication of Project information between the Developer's organization and TxDOT	A
7. Right-of-Way Acquisition Plan				
	7.1	Organization	Developer's main contractural arrangements	A
			Orginizational structure covering the activities to be performed in accordance with the Contract Documents	A

7. ROW Acquisition Plan (continued)				
	7.2	Personnel	Resource Plan for the Developer and its Contractors	A
			Arrangements for coordinating and managing staff interaction with TxDOT and its consultants, including collocation of Key Personnel and description of approach to coodrinating work of off-site personnel	A
			Names and contact details, titles, job roles and specific experience required for the Key Personnel as related to ROW acquisition and Utility Adjustment activities.	A
			Names and contact details, titles, job roles of principal personnel for Contractors and any third party with which Developer will coordinate activities	A
	7.3	Contractors	Overall control procedures for Contractors, including consultants and subconsultants	A
			Responsibility of Contractors and Affiliates	A
			Steps taken to ensure Contractors and Suppliers meet the obligations imposed by their respective Contracts	A
			Procedures for implementation of the EPTP for employees of Contractors in accordance with the Technical Provisions Section 4	A
	7.4	Interfaces	Interfacing between the Developer, Contractors and the Independent Reviewers during Project ROW acquisition, including the interfaces between Project ROW acquisition, Project design, and quality review processes	A
	7.4	Interfaces	Coordination with Utility Owners	A
			Procedures for establishing Utility Adjustment Concept Plans and Utility Adjustment Plans	B
	7.5	Relocation	Relocation Plan (ROW)	B
	7.6	Environmental	Integration of the interface between environmental requirements (including Hazardous Materials and demolition) and Project ROW acquisition activities	A
			Applicable procedures for the Hazardous Materials Management Plan (HMMP) in accordance with the Technical Provisions Section 4	A
			Applicable procedures to implement the Storm Water Pollution Prevention Plan (SW3P), recycling program and waste management in accordance with the Technical Provisions Section 4	A
			Address CEPP requirements	A
	7.7	Schedule	Logic linked ROW acquisition activities on a parcel-by-parcel basis as part of the Facility Baseline Schedule, including adequate time periods for TxDOT review and condemnation activities in accordance with the Technical Provisions Section 7	A
	7.8	Procedures	Procedures describing how the principal activities will be performed during the Project ROW acquisition, whether directly undertaken or subcontracted	A
	7.9	Quality Control	Procedures to ensure accuracy, completion, and quality in submittals to TxDOT and Governmental Entities	A
			Procedures to establish and encourage continuous improvement	A
			Quality control procedures and quality review standards for Project ROW acquisition in accordance with the Technical Provisions Section 7	A
			Integration of component parts of the CEPP into ROW acquisition management	A

7. ROW Acquisition Plan (continued)				
	7.10	Audit	Name, title, roles and responsibilities of supporting quality management staff reporting to the person with defined authority	A
	7.11	Document Management	The manner in which records will be maintained in compliance with the Technical Provisions, including any specific systems Developer will use	A
			Document management procedures in compliance with the Technical Provisions Section 2	A
			Identify environmental documentation and reporting requirements	A
8. Risk Management				
	8.1		Procedures for identifying, assessing, analyzing, controlling and managing project risks to meet its obligations under the Agreement.	A
9. Affected Third Parties Plan				
	9.1		Description and procedures on how Developer will mitigate the impact of the Work upon potentially impacted third parties and coordinate Work with other projects along the project corridor.	B
10. Emergency Management Plan				
	10.1		Procedures for Force Majeure events and vehicle accidents that may disrupt construction or damage facilities.	B

Texas Department of Transportation
Book 2 – Technical Provisions

IH 35E Managed Lanes Project

Attachment 2-2
Work Breakdown Structure Requirements

The following Work Breakdown Structure (WBS) shall be the basis for organizing all Work under the P3A Documents and shall be used to structure the baseline schedule and other cost control systems, including the Payment Progress Process if applicable.

Table 1 represents the minimum levels of the WBS that all cost and schedule information shall rollup to once the Project Baseline Schedule is fully developed.

The WBS shall conform to level structure as follows:

Table 1: WBS Minimum Requirements

1 [Name of Project]
- **1.1. Project Administration**
  - 1.1.1. Mobilization
    - 1.1.1.1. Developer
    - 1.1.1.2. DB Contractor
  - 1.1.2. Submittals and Permitting
    - 1.1.2.1. (By Governmental Agency)
      - 1.1.2.1.1. (By Specific Permit/Submittal Requirement)
- **1.2. Right-of Way Acquisition**
  - 1.2.1. Acquisition By TxDOT
    - 1.2.1.1. (By Parcel No.)
  - 1.2.2. Acquisition by Developer
    - 1.2.2.1. (By Parcel No.)
- **1.3. Utility Adjustments**
  - 1.3.1. Utility Coordination
    - 1.3.1.1. Administration and Planning
      - 1.3.1.1.1. Site Utility Engineering
      - 1.3.1.1.2. Conceptual Design
    - 1.3.1.2. (By Owner)
      - 1.3.1.2.1. Master Agreements
      - 1.3.1.2.2. Utility Assemblies
  - 1.3.2. Utility Relocations
    - 1.3.2.1. (By Owner)
      - 1.3.2.1.1. (By Line No.)
- **1.4. Design**
  - 1.4.1. General Activities and Field Work
    - 1.4.1.1. Design Mobilization
    - 1.4.1.2. Schematics
    - 1.4.1.3. Survey Work
    - 1.4.1.4. Geotechnical Investigations
    - 1.4.1.5. Additional Field Investigations
  - 1.4.2. Develop Specifications
    - 1.4.2.1. (By Discipline)
  - 1.4.3. Geotechnical Design
    - 1.4.3.1. General
    - 1.4.3.2. Earthwork Geotech
    - 1.4.3.3. Bridge Geotech
    - 1.4.3.4. Culvert Geotech
    - 1.4.3.5. Wall Geotech

1.4. Design (Continued)

- 1.4.4. Pavement Design
  - 1.4.4.1. Data Analysis and Draft Report
  - 1.4.4.2. Final Design and Report
- 1.4.5. Drainage Design
  - 1.4.5.1. Hydrologic and Hydraulic Design
  - 1.4.5.2. Preliminary System Design
  - 1.4.5.3. Detailed Drainage Design
- 1.4.6. Roadway Design
  - 1.4.6.1. Alignments
  - 1.4.6.2. Sections
  - 1.4.6.3. Detailed Design
- 1.4.7. Bridge Design
  - 1.4.7.1. Establish Criteria and Procedures
  - 1.4.7.2. Bridge layouts
  - 1.4.7.3. Substructure Design
  - 1.4.7.4. Superstructure Design
- 1.4.8. Retaining Wall Design
  - 1.4.8.1. Establish Criteria and Procedures
  - 1.4.8.2. Fill Wall Design
  - 1.4.8.3. Cut Wall Design
- 1.4.9. Traffic Management
  - 1.4.9.1. (By Phase)
- 1.4.10. Environmental Design
  - 1.4.10.1. Erosion Control/SWPPP
  - 1.4.10.2. Noise Wall Design
  - 1.4.10.3. Wetland and habitat Mitigation
  - 1.4.10.4. TCEQ Best Management Practices
- 1.4.11. Landscape and Aesthetic Design
  - 1.4.11.1. Landscape Design
  - 1.4.11.2. Aesthetic Design
- 1.4.12. Electrical Design
  - 1.4.12.1. Illumination
  - 1.4.12.2. Traffic Signals
- 1.4.13. ITS & TCS Design
  - 1.4.13.1. Duct Bank System & Power Supply
  - 1.4.13.2. ITS/TCS Equipment & Structures
- 1.4.14. Signage and Marking Design
  - 1.4.14.1. Overhead
  - 1.4.14.2. Small signs and pavement markings
- 1.4.15. Design Packages
  - 1.4.15.1. Package Preparation
  - 1.4.15.2. QA/QC Review
  - 1.4.15.3. Submittal
  - 1.4.15.4. TxDOT/IE Reviews
  - 1.4.15.5. Comment Resolution

1.5. Construction

- 1.5.1. General
  - 1.5.1.1. Mobilization
  - 1.5.1.2. Administration

1.5. Construction (Continued)

- 1.5.1.3. Quality Control
- 1.5.2. By Work Areas – NBFR, SBFR, NBGPL, SBGPL, ML, XR, etc.
  - 1.5.2.1. Removals
    - 1.5.2.1.1. Building Removals
    - 1.5.2.1.2. ROW Preparation
    - 1.5.2.1.3. Roadway Removals
    - 1.5.2.1.4. Bridge Removals
  - 1.5.2.2. Earthwork
    - 1.5.2.2.1. Topsoil Stripping and Placing
    - 1.5.2.2.2. Excavation
    - 1.5.2.2.3. Embankment
    - 1.5.2.2.4. Special Geotechnical Measures
  - 1.5.2.3. Landscaping
    - 1.5.2.3.1. Seeding and Sodding
    - 1.5.2.3.2. Fertilizer and Watering
    - 1.5.2.3.3. Special Aesthetic Landscaping (if applicable)
  - 1.5.2.4. Subgrade Treatment and Base
    - 1.5.2.4.1. Lime Treatment
    - 1.5.2.4.2. Flexible Base
  - 1.5.2.5. Pavement
    - 1.5.2.5.1. Asphalt Pavement
    - 1.5.2.5.2. Concrete Pavement
    - 1.5.2.5.3. Curb & Gutter
    - 1.5.2.5.4. Driveways
    - 1.5.2.5.5. Sidewalks and Median Paving
  - 1.5.2.6. Retaining Walls
    - 1.5.2.6.1. (By Wall No.)
  - 1.5.2.7. Bridges
    - 1.5.2.7.1. (By Bridge No.)
  - 1.5.2.8. Drainage
    - 1.5.2.8.1. Culverts
    - 1.5.2.8.2. Storm Sewer
    - 1.5.2.8.3. Riprap
  - 1.5.2.9. Traffic Control and Temporary Work
    - 1.5.2.9.1. Barricades, Signs & Traffic Handling
    - 1.5.2.9.2. Erosion Control
    - 1.5.2.9.3. Detour Construction/Removal
    - 1.5.2.9.4. Portable Traffic Barrier
    - 1.5.2.9.5. Workzone Pavement Marking
    - 1.5.2.9.6. Temporary Bridges
    - 1.5.2.9.7. Temporary Walls/Shoring
    - 1.5.2.9.8. Temporary Drainage
    - 1.5.2.9.9. Temporary Illumination
  - 1.5.2.10. Permanent Barriers
    - 1.5.2.10.1. Permanent Concrete Barriers
    - 1.5.2.10.2. Metal Beam Guard Fence
    - 1.5.2.10.3. Crash Attenuators
  - 1.5.2.11. Signals and Illumination
    - 1.5.2.11.1. Roadway Illumination
    - 1.5.2.11.2. High Mast Illumination

1. 5. Construction (Continued)

- 1.5.2.11.3. Electrical Services
- 1.5.2.11.4. Traffic Signals
- 1.5.2.12. ITS/TCS
  - 1.5.2.12.1. Duct Bank System
  - 1.5.2.12.2. Equipment Foundations
  - 1.5.2.12.3. Support Structures and Equipment
- 1.5.2.13. Permanent Signing and Marking
  - 1.5.2.13.1. Overhead Sign Structures
  - 1.5.2.13.2. Small Signs
  - 1.5.2.13.3. Pavement Markings
- 1.5.2.14. Environmental Mitigation
  - 1.5.2.14.1. Noise Walls
  - 1.5.2.14.2. Wetland and Habitat Mitigation
- 1.5.2.15. Hazardous Materials
  - 1.5.2.15.1. Site Assessments
  - 1.5.2.15.2. Remediation

Texas Department of Transportation

Book 2 – Technical Provisions

IH 35E Managed Lanes Project

Attachment 2-3
Organizational Structure for Cost Reporting

Organizational Structure for Cost Reporting

1. **PROJECT DESCRIPTION**
   - **1.1. Project Administration**
     - 1.1.1. Mobilization
     - 1.1.2. Submittals and Permitting
   - **1.2. Right-of Way Acquisition**
     - 1.2.1. Acquisition By TxDOT
     - 1.2.2. Acquisition by Developer
   - **1.3. Utility Adjustments**
     - 1.3.1. Utility Coordination
     - 1.3.2. Utility Relocations
   - **1.4. Design**
     - 1.4.1. General Activities and Field Work
     - 1.4.2. Develop Specifications
     - 1.4.3. Geotechnical Design
     - 1.4.4. Pavement Design
     - 1.4.5. Drainage Design
     - 1.4.6. Roadway Design
     - 1.4.7. Bridge Design
     - 1.4.8. Retaining Wall Design
     - 1.4.9. Traffic Management
     - 1.4.10. Environmental Design
     - 1.4.11. Landscape and Aesthetic Design
     - 1.4.12. Electrical Design
     - 1.4.13. ITS & TCS Design
     - 1.4.14. Signage and Marking Design
     - 1.4.15. Design Packages
   - **1.5. Construction**
     - 1.5.1. Traffic Control and Temporary Work
     - 1.5.2. Environmental Mitigation
     - 1.5.3. Hazardous Materials
     - 1.5.4. Removals
     - 1.5.5. Earthwork
     - 1.5.6. Subgrade Treatment and Base
     - 1.5.7. Drainage
     - 1.5.8. Pavement
     - 1.5.9. Retaining Walls
     - 1.5.10. Bridges
     - 1.5.11. Permanent Barriers
     - 1.5.12. Signals and Illumination
     - 1.5.13. ITS/TCS
     - 1.5.14. Landscaping
     - 1.5.15. Permanent Signing and Marking
   - **1.6. Changes Modifications**
     - 1.6.1. Change Order #xx

Texas Department of Transportation
Book 2 - Technical Provisions

IH 35E Managed Lanes Project

Attachment 2-4

I2MS Test Field Forms

I2MS Test Field Report

File: I2MSFieldReport.xls
File Type: Microsoft Excel (spreadsheet)
File Description: Describes what fields are required to be submitted per test, including pertinent header and footer information. All fields are required to be submitted if possible.

I2MS Test Form Fields

Purpose

The purpose of this document is to provide information on the tables and fields within I2MS.

Material Test Forms

Material Test Forms are forms used to run tests for a sample. A test form contains header and footer information which all forms have in common. Each test form also has a form body containing fields specific to the test method(s) being performed.

Header Fields

The header information is the metadata of the form. It is vital for searching for and analyzing records. All of the test forms have similar header information.

Table Name: HEADER_VALUE_OVT **Maximum Rows: 1**

Field Description	Field Name	Datatype	Length	Values	Required
Course Lift	course_lift	nvarchar	250		TRUE
Direction	direction	nvarchar	250	CVL	TRUE
Distance From CL	dist_from_cl	nvarchar	250		TRUE
Feature	feature	nvarchar	250	CVL	TRUE
Grade	grade	nvarchar	100	CVL	TRUE
Material	material	nvarchar	100	CVL	TRUE
Misc	misc	nvarchar	250		TRUE
Report Type	report_type	nvarchar	250	CVL	TRUE
Roadway	roadway	nvarchar	250	CVL	TRUE
Sample ID	sample_id	nvarchar	13		TRUE
Sample Location	sample_location	nvarchar	250		TRUE
Sample Type	sample_type	nvarchar	100	CVL	TRUE
Sampled By	sampled_by	nvarchar	250	CVL	TRUE
Sampled Date	sampled_date	datetime		MM/dd/yyyy	TRUE
Section	section	nvarchar	100	CVL	TRUE
Spec Item	spec_item	nvarchar	100	CVL	TRUE
Spec Year	spec_year	nvarchar	250		TRUE
Special Provision	special_provision	nvarchar	250	CVL	TRUE
Split Sample ID	split_sample_id	nvarchar	250		TRUE
Station	station	nvarchar	250	Pattern: [0-9]+\+[0-9][0-9](\.[0-9][0-9])?	TRUE
Structure Number	structure_number	nvarchar	250	CVL	TRUE
Supplier	supplier	nvarchar	100	CVL	TRUE

Footer Fields

The footer contains approval data and comments for each of the test forms.

Table Name: FOOTER_VALUE_OVT **Maximum Rows: 1**

Field Description	Field Name	Datatype	Length	Values	Required
Authorized By	authorized_by	nvarchar	100	CVL	TRUE
Authorized Date	authorized_date	smalldatetime		MM/dd/yyyy	TRUE
Completed Date	completed_date	smalldatetime		MM/dd/yyyy	TRUE
Digital Signature ID 1	dig_sig_id1	int			FALSE
Digital Signature ID 2	dig_sig_id2	int			FALSE
Remarks	remarks	text			TRUE
Reviewed By	reviewed_by	nvarchar	100	CVL	TRUE

Body Fields

Moisture Content of Aggregates (DB-103-E)

Table Name: VALUE_DB103E **Maximum Rows: 1**

Field Description	Field Name	Datatype	Length	Values	Required
Dish No.	dish_no	nvarchar	100		FALSE
Mass of Dry Sample	dry_sample_tare	decimal	(19, 8)		FALSE
Moisture Content	moisture_content	decimal	(19, 8)		TRUE
Payable Weight of Class 2 Flex Base	payable_weight	decimal	(19, 8)		FALSE
Stamp Code	stamp_code	int		CVL	TRUE
Tare Mass	tare_mass	decimal	(19, 8)		FALSE
Tested By	tested_by	nvarchar	100	CVL	TRUE
Tested Date	tested_date	smalldatetime		MM/dd/yyyy	TRUE
Mass of Wet Sample Tare	wet_sample_tare	decimal	(19, 8)		FALSE

Liquid Limit, Plastic Limit, Plastic Index (DB-104-6)

Table Name: VALUE_DB104E **Maximum Rows: 1**

Field Description	Field Name	Datatype	Length	Values	Required
Liquid Limit	liquid_limit_total	decimal	(19, 8)		TRUE
Stamp Code	stamp_code	int		CVL	TRUE
Tested By	tested_by	nvarchar	100	CVL	TRUE
Tested Date	tested_date	datetime		MM/dd/yyyy	TRUE

Table Name: VALUE_DB104E_SAMPLE **Maximum Rows: 6**

Field Description	Field Name	Datatype	Length	Values	Required
Dish No.	dish_no	nvarchar	100		FALSE
Liquid Limit (%)	liquid_limit	decimal	(19, 8)		FALSE
Mass of Dry Sample + Tare (g)	mass_dry_sample	decimal	(19, 8)		FALSE
Mass of Wet Sample + Tare (g)	mass_wet_sample	decimal	(19, 8)		FALSE
Moisture Content, %	moisture_content	decimal	(19, 8)		FALSE
Number of Blows	number_blows	int			FALSE
Tare Mass (g)	tare_mass	decimal	(19, 8)		FALSE

Table Name: VALUE_DB105E **Maximum Rows: 1**

Field Description	Field Name	Datatype	Length	Values	Required
Plastic Limit	plastic_limit_total	decimal	(19, 8)		FALSE
Stamp Code	stamp_code	int		CVL	TRUE
Tested By	tested_by	nvarchar	100	CVL	TRUE
Tested Date	tested_date	datetime		MM/dd/yyyy	TRUE

Table Name: VALUE_DB105E_SAMPLE **Maximum Rows: 3**

Field Description	Field Name	Datatype	Length	Values	Required
Dish No.	dish_no	nvarchar	100		FALSE
Mass of Dry Sample + Tare (g)	mass_dry_sample	decimal	(19, 8)		FALSE
Mass of Wet Sample + Tare (g)	mass_wet_sample	decimal	(19, 8)		FALSE
Plastic Limit (%)	plastic_limit	decimal	(19, 8)		FALSE
Tare Mass (g)	tare_mass	decimal	(19, 8)		FALSE
Mass of Water (g)	water_mass	decimal	(19, 8)		FALSE

Table Name: VALUE_DB106E **Maximum Rows: 1**

Field Description	Field Name	Datatype	Length	Values	Required
Plastic Index	plasticity_index	int			TRUE
Stamp Code	stamp_code	int		CVL	TRUE
Tested By	tested_by	nvarchar	100	CVL	TRUE
Tested Date	tested_date	datetime		MM/dd/yyyy	TRUE
Use Bar Linear Shrinkage to Calculate Plasticity Index?	use_bar_linear	nvarchar	100	{Yes, No}	FALSE

Bar Linear Shrinkage (DB-107-E)

Table Name: VALUE_DB107E **Maximum Rows: 1**

Field Description	Field Name	Datatype	Length	Values	Required
Calculate Plasticity Index	calculate_plasticity_index	bit		{Yes, No}	FALSE
Final Length	final_length	decimal	(19, 8)		FALSE
Initial Length	initial_length	decimal	(19, 8)		FALSE
Linear Shrinkage	linear_shrinkage	decimal	(19, 8)		TRUE
Maximum By Specification	maximum_by_specification	decimal	(19, 8)		FALSE
Minimum By Specification	minimum_by_specification	decimal	(19, 8)		FALSE
Plasticity Index	plasticity_index	decimal	(19, 8)		FALSE
Stamp Code	stamp_code	int		CVL	TRUE
Tested By	tested_by	nvarchar	100	CVL	TRUE
Tested Date	tested_date	smalldatetime		MM/dd/yyyy	TRUE
Unit	unit	nvarchar	100		FALSE

Particle Size Analysis (DB-110-E)

Table Name: VALUE_DB110E_SIEVE **Maximum Rows: 6**

Field Description	Field Name	Datatype	Length	Values	Required
Cumulative Percent Retained	cumulative_pct_retained	decimal	(19, 8)		TRUE
Cumulative Weight Retained	cumulative_weight_retained	decimal	(19, 8)		FALSE
Lower Spec Limit	lower_spec_limit	decimal	(19, 8)		FALSE
Master Grading	master_grading	nvarchar	100		TRUE
Sieve Size	sieve_size	nvarchar	100	CVL	TRUE
Upper Spec Limit	upper_spec_limit	decimal	(19, 8)		FALSE
Weight Retained	weight_retained	decimal	(19, 8)		FALSE

Table Name: VALUE_DB110E_TEST **Maximum Rows: 1**

Field Description	Field Name	Datatype	Length	Values	Required
Cumulative Method	individual_cumulative	nvarchar	100	{Cumulative, Individual}	FALSE
Negative No.40	negative_no_40	nvarchar	100		FALSE
Stamp Code	stamp_code	int		CVL	TRUE
Tested By	tested_by	nvarchar	100	CVL	TRUE
Tested Date	tested_date	datetime		MM/dd/yyyy	TRUE
Total	total	nvarchar	100		FALSE

Moisture-Density Work Sheet (DB-113-E)

Table Name: VALUE_DB113E **Maximum Rows: 1**

Field Description	Field Name	Datatype	Length	Values	Required
Dry Density Scale Max	dry_density_scale_max	decimal	(19, 8)		FALSE
Dry Density Scale Min	dry_density_scale_min	decimal	(19, 8)		FALSE
Dry Density Scale unit	dry_density_scale_unit	decimal	(19, 8)		FALSE
Hygroscopic Moisture	hygroscopic_moisture	decimal	(19, 8)		FALSE
Max Density(kg)	max_density_kg	decimal	(19, 8)		FALSE
Max Density (pcf)	max_density_pcf	decimal	(19, 8)		TRUE
Moisture scale max	moisture_scale_max	decimal	(19, 8)		FALSE
Moisture scale min	moisture_scale_min	decimal	(19, 8)		FALSE
Moisture scale unit	moisture_scale_unit	decimal	(19, 8)		FALSE
Optimum Moisture	optimum_moisture	decimal	(19, 8)		TRUE
Oven Dry Weight	oven_dry_weight	decimal	(19, 8)		FALSE
Soil Description	soil_desc	nvarchar	100		TRUE
Specific Gravity (Apparent)	specific_gravity	decimal	(19, 8)		FALSE
Stamp Code	stamp_code	int		CVL	TRUE
Tested By	tested_by	nvarchar	100	CVL	TRUE
Tested Date	tested_date	smalldatetime		MM/dd/yyyy	TRUE
Weight of Aggr., Pycn. & Water	weight_of_aggr	decimal	(19, 8)		FALSE
Weight of Pycnometer & Water	weight_of_pycnometer	decimal	(19, 8)		FALSE

Table Name: VALUE_DB113E_SPECIMEN **Maximum Rows: 4**

Field Description	Field Name	Datatype	Length	Values	Required
Dry Density	dry_density	decimal	(19, 8)		FALSE
Dry Mass Material	dry_mass_material	decimal	(19, 8)		FALSE
Dry Mass Pan & Specimen	dry_mass_pan_specimen	decimal	(19, 8)		FALSE
Estimated Dry Density	est_dry_density	decimal	(19, 8)		FALSE
Height of Specimen	height_specimen	decimal	(19, 8)		FALSE
Mass Material	mass_material	decimal	(19, 8)		FALSE
Mass Water	mass_water	decimal	(19, 8)		FALSE
Mass Water Added	mass_water_added	decimal	(19, 8)		FALSE
Percent Water Content	pct_water_content	decimal	(19, 8)		FALSE
Percent Water On Total	pct_water_total	decimal	(19, 8)		FALSE
Tare Mass Mold	tare_mass_mold	decimal	(19, 8)		FALSE
Tare Mass Pan	tare_mass_pan	decimal	(19, 8)		FALSE
Volume Per Linear	volume_per_linear	decimal	(19, 8)		FALSE
Volume of Specimen	volume_specimen	decimal	(19, 8)		FALSE
Wet Density of Specimen	wet_density_specimen	decimal	(19, 8)		FALSE
Wet Mass Of Pan & Specimen	wet_mass_pan_specimen	decimal	(19, 8)		FALSE
Wet Mass Specimen	wet_mass_specimen	decimal	(19, 8)		FALSE
Wet Mass Specimen & Mold	wet_mass_specimen_mold	decimal	(19, 8)		FALSE

Moisture-Density Relationship of Subgrade and Embankment Soils (DB-114-E)

Table Name: VALUE_DB114E **Maximum Rows: 1**

Field Description	Field Name	Datatype	Length	Values	Required
Dry Density Scale Max	dry_density_scale_max	decimal	(19, 8)		FALSE
Dry Density Scale Min	dry_density_scale_min	decimal	(19, 8)		FALSE
Dry Density Scale unit	dry_density_scale_unit	decimal	(19, 8)		FALSE
Hygroscopic Moisture	hygroscopic_moisture	decimal	(19, 8)		FALSE
Max Density (kg)	max_density_kg	decimal	(19, 8)		FALSE
Max Density (pcf)	max_density_pcf	decimal	(19, 8)		TRUE
Moisture scale max	moisture_scale_max	decimal	(19, 8)		FALSE
Moisture scale min	moisture_scale_min	decimal	(19, 8)		FALSE
Moisture scale unit	moisture_scale_unit	decimal	(19, 8)		FALSE
Optimum Moisture	optimum_moisture	decimal	(19, 8)		TRUE
Oven Dry Weight	oven_dry_weight	decimal	(19, 8)		FALSE
Soil Descript	soil_description	nvarchar	100		TRUE
Specific Gravity	specific_gravity	decimal	(19, 8)		FALSE
Stamp Code	stamp_code	int		CVL	TRUE
Tested By	tested_by	nvarchar	100	CVL	TRUE
Tested Date	tested_date	smalldatetime		MM/dd/yyyy	TRUE
Weight of Aggr., Pycn. & Water	weight_of_aggr	decimal	(19, 8)		FALSE
Weight of Pycnometer & Water	weight_of_pycnometer	decimal	(19, 8)		FALSE

Table Name: VALUE_DB114E_SPECIMEN **Maximum Rows: 4**

Field Description	Field Name	Datatype	Length	Values	Required
Dry Density	dry_density	decimal	(19, 8)		FALSE
Dry Mass Material	dry_mass_material	decimal	(19, 8)		FALSE
Dry Mass Pan & Specimen	dry_mass_pan_specimen	decimal	(19, 8)		FALSE
Estimated Dry Density	est_dry_density	decimal	(19, 8)		FALSE
Height of Specimen	height_specimen	decimal	(19, 8)		FALSE
Mass Material	mass_material	decimal	(19, 8)		FALSE
Mass Water	mass_water	decimal	(19, 8)		FALSE
Mass Water Added	mass_water_added	decimal	(19, 8)		FALSE
Percent Water Content	pct_water_content	decimal	(19, 8)		FALSE
Percent Water Total	pct_water_total	decimal	(19, 8)		FALSE
Tare Mass Mold	tare_mass_mold	decimal	(19, 8)		FALSE
Tare Mass Pan	tare_mass_pan	decimal	(19, 8)		FALSE
Volume Per Linear mm	volume_per_linear	decimal	(19, 8)		FALSE
Volume of Specimen	volume_specimen	decimal	(19, 8)		FALSE
Wet Density of Specimen	wet_density_specimen	decimal	(19, 8)		FALSE
Wet Mass of Pan & Specimen	wet_mass_pan_specimen	decimal	(19, 8)		FALSE
Wet Mass Specimen	wet_mass_specimen	decimal	(19, 8)		FALSE
Wet Mass Specimen & Mold	wet_mass_specimen_mold	decimal	(19, 8)		FALSE

Nuclear Density and Moisture Determination (DB-115-1)

Table Name: VALUE_DB115_1 **Maximum Rows: 1**

Field Description	Field Name	Datatype	Length	Values	Required
Density Count	density_count	int			FALSE
Density, %	density_pct	decimal	(19, 8)		TRUE
Pass/Fail	density_pct_pass_fail	nvarchar	100		FALSE
Max Density Specification Requirement	density_specification_req_max	decimal	(19, 8)		FALSE
Low Density Specification Req	density_specification_req_min	decimal	(19, 8)		FALSE
density_standard	density_standard	int			FALSE
Determined By Test Method	determined_by_test_method	nvarchar	100	{DB-113-E, DB-114-E}	FALSE
Dry Density, pcf	dry_density_pcf	decimal	(19, 8)		TRUE
Gauge No.	gauge_no	nvarchar	100		TRUE
Maximum Dry Density	max_dry_density_pcf	decimal	(19, 8)		TRUE
Moisture Content, %	moisture_content_pct	decimal	(19, 8)		TRUE
Moisture Content Pct Pass or Fail	moisture_content_pct_pass_fail	nvarchar	100	{Pass, Fail}	FALSE
Moisture Count	moisture_count	int			FALSE
Max Moisture Specification Requirement	moisture_specification_req_max	decimal	(19, 8)		FALSE
Low Moisture Specification Req	moisture_specification_req_min	decimal	(19, 8)		FALSE
Moisture Standard	moisture_standard	int			FALSE
Optimum Moisture Content	optimum_moisture_content_pct	decimal	(19, 8)		TRUE
Probe Depth	probe_depth	decimal	(19, 8)		TRUE
Soil Description	soil_desc	nvarchar	100		TRUE
Stamp Code	stamp_code	int		CVL	TRUE
Tested By	tested_by	nvarchar	100	CVL	TRUE
Tested Date	tested_date	datetime		MM/dd/yyyy	TRUE
Wet Density , pcf	wet_density_pcf	decimal	(19, 8)		FALSE

Soil /Aggregate Field Unit Weight Tests (DB-115-2)

Table Name: VALUE_DB115_2 **Maximum Rows: 1**

Field Description	Field Name	Datatype	Length	Values	Required
Compaction, %	compaction_pct	decimal	(19, 8)		FALSE
Compaction Required	compaction_req_pct	decimal	(19, 8)		FALSE
Dry unit weight	dry_unit_weight	decimal	(19, 8)		FALSE
Dry Weight Total Moisture Sample	dry_weight_total_moisture	decimal	(19, 8)		FALSE
Final Weight Apparatus & Sand	final_weight_apparatus	decimal	(19, 8)		FALSE
Final Weight of Sand	final_weight_sand	decimal	(19, 8)		FALSE
Initial Weight Apparatus & Sand	initial_weight_apparatus	decimal	(19, 8)		FALSE
Initial Weight of Sand	initial_weight_sand	decimal	(19, 8)		FALSE
Maximum dry unit weight	max_dry_unit_weight	decimal	(19, 8)		FALSE
Moisture Required	moisture_req_pct	decimal	(19, 8)		FALSE
Optium Moisture (% if of dry unit weight)	optimum_moisture	decimal	(19, 8)		FALSE
Pass/Fail % Density	pass_fail_pct_density	nvarchar	100		FALSE
Pass/Fail % Moisture	pass_fail_pct_moisture	nvarchar	100		FALSE
% Moisture	pct_moisture	decimal	(19, 8)		FALSE
Sand bulk unit weight	sand_bulk_unit_weight	decimal	(19, 8)		FALSE
Soil Descript	soil_desc	nvarchar	100		FALSE
Stamp Code	stamp_code	int		CVL	FALSE
Tested By	tested_by	nvarchar	100	CVL	FALSE
Tested Date	tested_date	datetime		MM/dd/yyyy	FALSE
Total Volume-Sand Userd	total_volume	decimal	(19, 8)		FALSE
Volume of Hole	volume_hole	decimal	(19, 8)		FALSE
Volume of Surface	volume_surface	decimal	(19, 8)		FALSE
Weight of Material From Hole	weight_material_hole	decimal	(19, 8)		FALSE
Wet Unit Weight	wet_unit_weight	decimal	(19, 8)		FALSE
Wet Weight Total Moisture Sample	wet_weight_total_moisture	decimal	(19, 8)		FALSE

Test Resistance to Degradation By Wet Ball Mill Method (DB-116-E)

Table Name: VALUE_DB116E **Maximum Rows: 1**

Field Description	Field Name	Datatype	Length	Values	Required
Cumulative Method	cumulative_method	nvarchar	50	{Cumulative, Individual}	FALSE
Total of 3000g weight retained	individual_weight_retained_3000g_total	decimal	(19, 8)		FALSE
Total of 3500g weight retained	individual_weight_retained_3500g_total	decimal	(19, 8)		FALSE
Percent Soil Binder	pct_soil_binder	decimal	(19, 8)		FALSE
Percent Soil Binder Increase	pct_soil_binder_increase	decimal	(19, 8)		TRUE
Stamp Code	stamp_code	int		CVL	TRUE
Tested By	tested_by	nvarchar	100	CVL	TRUE
Tested Date	tested_date	smalldatetime		MM/dd/yyyy	TRUE
Wet Ball Mill -No.40 Individual Percent Retained	wbm_individual_pct_retained_minusno40	decimal	(19, 8)		FALSE
Wet Ball Mill No.40 Individual Percent Retained	wbm_individual_pct_retained_no40	decimal	(19, 8)		FALSE
Wet Ball Mill Initial Weight	wbm_initial_weight	decimal	(19, 8)		FALSE
Wet Ball Mill Value	wbm_value	decimal	(19, 8)		TRUE
Wet Ball Mill -No.40 Weight Retained	wbm_weight_retained_minusno40	decimal	(19, 8)		FALSE
Wet Ball Mill No.40 Weight Retained	wbm_weight_retained_no40	decimal	(19, 8)		FALSE
Total of weight retained	weight_retained_total	decimal	(19, 8)		FALSE
Washed Sieve Analysis No.40 Individual Percent Retained	wsa_individual_pct_retained_no40	decimal	(19, 8)		FALSE
Washed Sieve Analysis -No.40 Individual Percent Retained	wsa_inidividual_pct_retained_minusno40	decimal	(19, 8)		FALSE
Washed Sieve Analysis Initial Weight	wsa_initial_weight	decimal	(19, 8)		FALSE
Washed Sieve Analysis -No.40 Weight Retained	wsa_weight_retained_minusno40	decimal	(19, 8)		FALSE
Washed Sieve Analysis No.40 Weight Retained	wsa_weight_retained_no40	decimal	(19, 8)		FALSE

Table Name: VALUE_DB116E_SIEVE **Maximum Rows: 7**

Field Description	Field Name	Datatype	Length	Values	Required
Cumulative Percent Retained	cumulative_pct_retained	decimal	(19, 8)		FALSE
3000g Cumulative Weight Retained	cumulative_weight_retained_3000g	decimal	(19, 8)		FALSE
3500g Cumulative Weight Retained	cumulative_weight_retained_3500g	decimal	(19, 8)		FALSE
Individual Percent Retained	individual_pct_retained	decimal	(19, 8)		FALSE
3000g Individual Weight Retained	individual_weight_retained_3000g	decimal	(19, 8)		FALSE
3500g Individual Weight Retained	individual_weight_retained_3500g	decimal	(19, 8)		FALSE
Sieve Size	sieve_size	nvarchar	100		FALSE
Weight Retained	weight_retained	decimal	(19, 8)		FALSE

Triaxial Compression Tests (DB-117-E)

Table Name: VALUE_DB117E **Maximum Rows: 1**

Field Description	Field Name	Datatype	Length	Values	Required
Average Corrected Strength, 00 psi	average_corrected_strength_0psi	decimal	(19, 8)		TRUE
Average Corrected Strength, 15 psi	average_corrected_strength_15psi	decimal	(19, 8)		TRUE
Classification	classification	nvarchar	100		FALSE
Cohesion, psi	cohesion_psi	decimal	(19, 8)		FALSE
Correlation Factor	correlation_factor	decimal	(19, 8)		FALSE
Grade, 00 psi	grade_0psi	nvarchar	100		FALSE
Grade, 15 psi	grade_15psi	nvarchar	100		FALSE
Internal Angle of Friction	internal_angle_friction	decimal	(19, 8)		FALSE
Stamp Code	stamp_code	int		CVL	TRUE
Tested By	tested_by	nvarchar	100	CVL	TRUE
Tested Date	tested_date	smalldatetime		MM/dd/yyyy	TRUE

Table Name: VALUE_DB117E_SPECIMEN **Maximum Rows: 8**

Field Description	Field Name	Datatype	Length	Values	Required
Area, in.^2	area	decimal	(19, 8)		FALSE
Avg. Cross Sectional Area, in^2	avg_cross_sectional_area	decimal	(19, 8)		FALSE
Average Diameter, in.	avg_diameter	decimal	(19, 8)		FALSE
Corrected Stress, psi.	corrected_stress_psi	decimal	(19, 8)		FALSE
Dry Density of Specimen, pcf	dry_density_specimen_pcf	decimal	(19, 8)		FALSE
Final Weight of Stones	final_weight_stones	decimal	(19, 8)		FALSE
Height of Stone 1, in.	height_stone1	decimal	(19, 8)		FALSE
Height of Stone 2, in.	height_stone2	decimal	(19, 8)		FALSE
I-Strain, in./in.	i_strain	decimal	(19, 8)		FALSE
Initial Height of Specimen, in.	initial_height	decimal	(19, 8)		FALSE
Lateral Pressure, psi.	lateral_pressure_psi	decimal	(19, 8)		FALSE
New Height of Specimen, in.	new_height	decimal	(19, 8)		FALSE
Moisture of Specimen, %	pct_moisture_specimen	decimal	(19, 8)		FALSE
% Strain , in./in.	pct_strain	decimal	(19, 8)		FALSE
Uncorrected Stress, psi.	uncorrected_stress_psi	decimal	(19, 8)		FALSE
Weight of Specimen	weight_specimen	decimal	(19, 8)		FALSE
Weight of Stones and Specimen	weight_stones_specimen	decimal	(19, 8)		FALSE

Determining Soil pH (DB-128-E)

Table Name: VALUE_DB128E **Maximum Rows: 1**

Field Description	Field Name	Datatype	Length	Values	Required
Soil pH	soil_ph	decimal	(19, 8)		TRUE
Stamp Code	stamp_code	int		CVL	TRUE
Tested By	tested_by	nvarchar	100	CVL	TRUE
Tested Date	tested_date	smalldatetime		MM/dd/yyyy	TRUE

Measuring Resistivity of Soil Materials (DB-129-E)

Table Name: VALUE_DB129E **Maximum Rows: 1**

Field Description	Field Name	Datatype	Length	Values	Required
Resistance using resistivity meter	resistance_using_meter	decimal	(19, 8)		FALSE
Resistivity	resistivity_result	decimal	(19, 8)		TRUE
A= Area of one electrode	sbf_area	decimal	(19, 8)		FALSE
Distance between electrodes	sbf_distance	decimal	(19, 8)		FALSE
Soil Box Factor	sbf_factor	decimal	(19, 8)		FALSE
Stamp Code	stamp_code	int		CVL	TRUE
Tested By	tested_by	nvarchar	100	CVL	TRUE
Tested Date	tested_date	smalldatetime		MM/dd/yyyy	TRUE

Measuring Thickness of Pavement Layer (DB-140-E)

Table Name: VALUE_DB140E **Maximum Rows: 1**

Field Description	Field Name	Datatype	Length	Values	Required
Average Depth:	avg_depth	decimal	(19, 8)		TRUE
Depth 1:	depth_1	decimal	(19, 8)		FALSE
Depth 2:	depth_2	decimal	(19, 8)		FALSE
Depth 3:	depth_3	decimal	(19, 8)		FALSE
Stamp Code	stamp_code	int		CVL	TRUE
Tested By	tested_by	nvarchar	100	CVL	TRUE
Tested Date	tested_date	datetime		MM/dd/yyyy	TRUE

OVF HMAC Test Data: DB-200-F, DB-207-FPR, DB-227-F, DB-236-F, DB-207-F (DB-200/07/36)

Table Name: VALUE_DB207F **Maximum Rows: 1**

Field Description	Field Name	Datatype	Length	Values	Required
Specific Gravity of Asphalt Binder	specific_gravity	decimal	(19, 3)		FALSE
Stamp Code	stamp_code	int		CVL	FALSE
Tested By	tested_by	nvarchar	100	CVL	FALSE
Tested Date	tested_date	smalldatetime		MM/dd/yyyy	FALSE
Voids in Mineral Aggregate (VMA)	vma	decimal	(19, 1)		TRUE

Table Name: VALUE_DB207FPR **Maximum Rows: 1**

Field Description	Field Name	Datatype	Length	Values	Required
Average Actual Specific Gravity (Ga):	GA	nvarchar	100		TRUE
Lab Molded Density, %:	LMD	decimal	(19, 8)		TRUE
Stamp Code	stamp_code	nvarchar	100	CVL	TRUE
Tested By	tested_by	nvarchar	100	CVL	TRUE
Tested Date	tested_date	datetime		MM/dd/yyyy	TRUE

Table Name: VALUE_DB227F **Maximum Rows: 1**

Field Description	Field Name	Datatype	Length	Values	Required
Rice Specific Gravity (Gr):	rice_specific_gravity	decimal	(19, 8)		TRUE
Stamp Code	stamp_code	nvarchar	100	CVL	TRUE
Tested By	tested_by	nvarchar	100	CVL	TRUE
Tested Date	tested_date	datetime		MM/dd/yyyy	TRUE

Table Name: VALUE_DB229F **Maximum Rows: 1**

Field Description	Field Name	Datatype	Length	Values	Required
Stamp Code	stamp_code	nvarchar	100	CVL	TRUE
Tested By	tested_by	nvarchar	100	CVL	TRUE
Tested Date	tested_date	datetime		MM/dd/yyyy	TRUE

Table Name: VALUE_DB229F_SIEVE **Maximum Rows: 10**

Field Description	Field Name	Datatype	Length	Values	Required
Current JMF	Current_JMF	nvarchar	100		FALSE
Design JMF	Design_JMF	nvarchar	100		FALSE
Adjusted Individual % Retained	pct	decimal	(19, 8)		TRUE
Sieve Size	sieve_size	nvarchar	100	CVL	TRUE

Table Name: VALUE_DB236F **Maximum Rows: 1**

Field Description	Field Name	Datatype	Length	Values	Required
Asphalt Content, %:	AC	decimal	(19, 8)		TRUE
Stamp Code	stamp_code	nvarchar	100	CVL	TRUE
Tested By	tested_by	nvarchar	100	CVL	TRUE
Tested Date	tested_date	datetime		MM/dd/yyyy	TRUE

Sieve Analysis of Non-Surface Treatment Aggregates (DB-200-F)

Table Name: VALUE_DB200F **Maximum Rows: 1**

Field Description	Field Name	Datatype	Length	Values	Required
Cumulative Weight Retained Minusno14	cumulative_weight_retained_minusno14	decimal	(19, 8)		FALSE
Dry Weight After Washing	dry_weight_after_washing	decimal	(19, 8)		FALSE
Limit As Percent	limit_as_percent	nvarchar	100	{Passing, Retained}	FALSE
Original Dry Weight	original_dry_weight	decimal	(19, 8)		FALSE
Sieve Analysis Result 1	sieve_analysis_result1	nvarchar	100		FALSE
Sieve Analysis Result 2	sieve_analysis_result2	decimal	(19, 8)		FALSE
Sieve Analysis Result 3	sieve_analysis_result3	decimal	(19, 8)		FALSE
Sieve Analysis Result 4	sieve_analysis_result4	decimal	(19, 8)		FALSE
Sieving Loss	sieving_loss	decimal	(19, 8)		FALSE
Stamp Code	stamp_code	int		CVL	TRUE
Tested By	tested_by	nvarchar	100	CVL	TRUE
Tested Date	tested_date	smalldatetime		MM/dd/yyyy	TRUE
Total Weight	total_weight	decimal	(19, 8)		FALSE
Washing Loss	washing_loss	decimal	(19, 8)		FALSE

Table Name: VALUE_DB200F_SIEVE **Maximum Rows: 12**

Field Description	Field Name	Datatype	Length	Values	Required
Cumulative Percent Passing	cumulative_pct_passing	decimal	(19, 8)		TRUE
Cumulative Percent Retained	cumulative_pct_retained	decimal	(19, 8)		FALSE
Cumulative Weight Retained	cumulative_weight_retained	decimal	(19, 8)		FALSE
Individual Weight Retained	individual_weight_retained	decimal	(19, 8)		FALSE
Lower Limit Grading	lower_limit_grading	decimal	(19, 8)		FALSE
Sieve Size	sieve_size	nvarchar	100	{2", 1-3/4", 1-1/2", 1-1/4", 1", 7/8", 3/4", 5/8", 1/2", 7/16", 3/8", 5/16", 1/4", No. 4, No. 6, No. 8, No. 10, No. 14, No. 16, No. 20, No. 30, No. 40, No. 50, No. 80, No. 100, No. 200 }	TRUE
Upper Limit Grading	upper_limit_grading	decimal	(19, 8)		FALSE
Within Grading Limits	within_grading_limits	bit			TRUE

Sand Equivalent (DB-203-F)

Table Name: VALUE_DB203F **Maximum Rows: 1**

Field Description	Field Name	Datatype	Length	Values	Required
Average Sand Equivalent	average_sand_equivalent	decimal	(19, 8)		TRUE
Clay No.1 Reading	clay1_reading	decimal	(19, 8)		FALSE
Clay No.2 Reading	clay2_reading	decimal	(19, 8)		FALSE
Sand No.1 Calculated	sand1_calculated	decimal	(19, 8)		FALSE
Sand No.1 Reading	sand1_reading	decimal	(19, 8)		FALSE
Sand No.1 Reported	sand1_reported	decimal	(19, 8)		FALSE
Sand No.2 Calculated	sand2_calculated	decimal	(19, 8)		FALSE
Sand No.2 Reading	sand2_reading	decimal	(19, 8)		FALSE
Sand No.2 Reported	sand2_reported	decimal	(19, 8)		FALSE
Stamp Code	stamp_code	int		CVL	TRUE
Tested By	tested_by	nvarchar	100	CVL	TRUE
Tested Date	tested_date	smalldatetime		MM/dd/yyyy	TRUE

QC/QA Test Data (DB-207-FPL)

Table Name: VALUE_DB207FPL **Maximum Rows: 1**

Field Description	Field Name	Datatype	Length	Values	Required
In Place Air Void, %	air_void	decimal	(19, 8)		TRUE
Stamp Code	stamp_code	nvarchar	100	CVL	TRUE
Tested By	tested_by	nvarchar	100	CVL	TRUE
Tested Date	tested_date	datetime		MM/dd/yyyy	TRUE

Deleterious Material & Decantation For Coarse Aggr (DB-217-F)

Table Name: VALUE_DB217F **Maximum Rows: 1**

Field Description	Field Name	Datatype	Length	Values	Required
Original Weight Retained	part1_orig_weight_retained	decimal	(19, 8)		FALSE
Percent Deterious Material	part1_pct_deleterious_material	decimal	(19, 8)		TRUE
Sieve Size	part1_sieve_size	nvarchar	100		FALSE
Weight Deleterious Material	part1_weight_deleterious_material	decimal	(19, 8)		FALSE
Dry Weight after Washing	part2_dry_weight_after_washing	decimal	(19, 8)		FALSE
Percent Loss By Decantation	part2_loss_by_decantation	decimal	(19, 8)		TRUE
Original Weight Retained	part2_orig_weight_retained	decimal	(19, 8)		FALSE
Sieve Size	part2_sieve_size	nvarchar	53		FALSE
Stamp Code	stamp_code	int		CVL	TRUE
Tested By	tested_by	nvarchar	100	CVL	TRUE
Tested Date	tested_date	datetime		MM/dd/yyyy	TRUE

Sieve Analysis for Fine & Coarse Aggregate (DB-401-A)

Table Name: VALUE_DB401A **Maximum Rows: 1**

Field Description	Field Name	Datatype	Length	Values	Required
Equivalent Exceed 85	equivalent_exceed_85	bit			FALSE
Stamp Code	stamp_code	int		CVL	TRUE
Tested By	tested_by	nvarchar	100	CVL	TRUE
Tested Date	tested_date	smalldatetime		MM/dd/yyyy	TRUE
Total	total	decimal	(19, 8)		FALSE

Table Name: VALUE_DB401A_SIEVE **Maximum Rows: 8**

Field Description	Field Name	Datatype	Length	Values	Required
Cumulative Percent Passing	cumulative_pct_passing	decimal	(19, 8)		FALSE
Cumulative Percent Retained	cumulative_pct_retained	decimal	(19, 8)		TRUE
Cumulative Weight Retained	cumulative_weight_retained	decimal	(19, 8)		FALSE
Individual Weight Retained	individual_weight_retained	decimal	(19, 8)		FALSE
Lower Spec Limit	lower_retained_spec_limit	decimal	(19, 8)		FALSE
Sieve Size	sieve_size	nvarchar	100		TRUE
Upper Spec Limit	upper_retained_spec_limit	decimal	(19, 8)		FALSE
Within Master Grading	within_master_grading	varchar	20		TRUE

Table Name: VALUE_DB402A **Maximum Rows: 1**

Field Description	Field Name	Datatype	Length	Values	Required
Fineness Modulus	fineness_modulus	decimal	(19, 8)		FALSE
Stamp Code	stamp_code	int		CVL	FALSE
Tested By	tested_by	nvarchar	100	CVL	FALSE
Tested Date	tested_date	smalldatetime		MM/dd/yyyy	FALSE

Decantation Test For Concrete Aggregates (DB-406-A)

Table Name: VALUE_DB406A **Maximum Rows: 1**

Field Description	Field Name	Datatype	Length	Values	Required
Dry Mass After Washing	dry_mass_after_washing	decimal	(19, 8)		FALSE
Mass of Pycnometer Containing Sample and Water To Fill After Washing	mass_of_pycnometer_after_washing	decimal	(19, 8)		FALSE
Mass of Pycnometer Containing Sample and Water To Fill Before Washing	mass_of_pycnometer_before_washing	decimal	(19, 8)		FALSE
Mass of Pycnometer Filled With Water at Approx. Same Temperature as above	mass_of_pycnometer_with_water	decimal	(19, 8)		FALSE
Original Dry Mass of Sample	original_dry_mass	decimal	(19, 8)		FALSE
% Loss	percent_loss_part1	decimal	(19, 8)		TRUE
Percent Loss	percent_loss_part2	decimal	(19, 8)		FALSE
Stamp Code	stamp_code	int		CVL	TRUE
Test By:	test_by	nvarchar	100	{Part I - Lab Method, Part II - Field Method}	FALSE
Tested By	tested_by	nvarchar	100	CVL	TRUE
Tested By - Part II	tested_by_part2	nvarchar	100	CVL	FALSE
Tested Date	tested_date	smalldatetime		MM/dd/yyyy	TRUE
Tested Date - Part II	tested_date_part2	datetime		MM/dd/yyyy	FALSE

Organic Impurities in Fine Aggregate for Concrete (DB-408-A)

Table Name: VALUE_DB408A **Maximum Rows: 1**

Field Description	Field Name	Datatype	Length	Values	Required
Color of the Supernatant Liquid	color_of_supernatant_liquid	nvarchar	100	{LIGHTER THAN STANDARD, EQUAL TO STANDARD, DARKER THAN STANDARD}	TRUE
Stamp Code	stamp_code	int		CVL	TRUE
Tested By	tested_by	nvarchar	100	CVL	TRUE
Tested Date	tested_date	smalldatetime		MM/dd/yyyy	TRUE

Deleterious Material (DB-413-A)

Table Name: VALUE_DB413A **Maximum Rows: 1**

Field Description	Field Name	Datatype	Length	Values	Required
Clay	clay_value1	decimal	(19, 8)		FALSE
Clay Percentage	clay_value2	decimal	(19, 8)		TRUE
Friable	friable_value1	decimal	(19, 8)		FALSE
Friable Percentage	friable_value2	decimal	(19, 8)		TRUE
Laminated	laminated_value1	decimal	(19, 8)		FALSE
Laminated Percentage	laminated_value2	decimal	(19, 8)		TRUE
Other	other_value1	decimal	(19, 8)		FALSE
Othesr Percentage	other_value2	decimal	(19, 8)		FALSE
Deleterious Material Retained	percent_deleterious_material_retained	decimal	(19, 8)		TRUE
Shale	shale_value1	decimal	(19, 8)		FALSE
Shale Percentage	shale_value2	decimal	(19, 8)		TRUE
Sieve Size	sieve_size	nvarchar	100		FALSE
Stamp Code	stamp_code	int		CVL	TRUE
Tested By	tested_by	nvarchar	100	CVL	TRUE
Tested Date	tested_date	datetime		MM/dd/yyyy	TRUE
Total	total	decimal	(19, 8)		FALSE
Total Weight Sample	total_weight_sample	decimal	(19, 8)		FALSE

Field Form Concrete Sample - Cylinders (DB-418-A)

Table Name: VALUE_DB418A **Maximum Rows: 1**

Field Description	Field Name	Datatype	Length	Values	Required
Actual Water	actual_water	nvarchar	100		TRUE
Agg. Correction Factor	agg_correction_factor	nvarchar	100	CVL	TRUE
Agg. Size	agg_size	nvarchar	100	CVL	TRUE
Air Temperature	air_temperature	nvarchar	100		TRUE
Batch Size	batch_size	nvarchar	100		TRUE
Batch Time	batch_time	nvarchar	100		TRUE
Class of Concrete	class_of_concrete	nvarchar	100	CVL	TRUE
Concrete Temperature	concrete_temperature	nvarchar	100		TRUE
Corrected Air Content	corrected_air_content	decimal	(19, 8)		TRUE
Design Water	design_water	nvarchar	100		TRUE
Mix ID	mix_id	nvarchar	100		TRUE
Placement Air	placement_air	decimal	(19, 8)		TRUE
Placement Slump	placement_slump	decimal	(19, 8)	CVL	TRUE
Pump Air Loss	pump_air_loss	decimal	(19, 8)		TRUE
Pump Slump Loss	pump_slump_loss	decimal	(19, 8)		TRUE
Req. Strength	req_strength	nvarchar	100		TRUE
Sample Time	sample_time	nvarchar	100		TRUE
Average 7 Day Compressive Strength	seven_day_average	decimal	(19, 8)		FALSE
Slump	slump	decimal	(19, 8)		TRUE
Specimen Size	specimen_size	nvarchar	100	{4x8, 6x12}	TRUE
Stamp Code	stamp_code	int		CVL	TRUE
Tested By	tested_by	nvarchar	100	CVL	TRUE
Tested Date	tested_date	smalldatetime		MM/dd/yyyy	TRUE
Ticket #	ticket_number	nvarchar	100		TRUE
Total Water	total_water	nvarchar	100		TRUE
Truck #	truck_number	nvarchar	100		TRUE
Average 28 Day Compressive Strength	twenty_eight_day_average	decimal	(19, 8)		FALSE
Unit Wt.	unit_weight	nvarchar	100		TRUE
Water Added	water_added	nvarchar	100		TRUE

Table Name: VALUE_DB418A_AVERAGE **Maximum Rows: 3**

Field Description	Field Name	Datatype	Length	Values	Required
Average Age	average_age	nvarchar	100		TRUE
Average Strength	average_strength	decimal	(19, 8)		TRUE

Table Name: VALUE_DB418A_SPECIMEN **Maximum Rows: 7**

Field Description	Field Name	Datatype	Length	Values	Required
Age(days)	age	nvarchar	100	CVL	TRUE
Area	area	decimal	(19, 8)		TRUE
Load(lbs)	load_lbs	decimal	(19, 8)		TRUE
Pass/Fail	pass_fail	nvarchar	5		FALSE
Specimen	specimen	nvarchar	100		FALSE
Strength	strength	decimal	(19, 8)		TRUE
Test Date	test_date	smalldatetime		MM/dd/yyyy	TRUE
Tested By	tested_by	nvarchar	100	CVL	TRUE
Type Fracture	type_fracture	varchar	50	{A, B, C, D, E}	TRUE

Determining Pavement Thickness By Direct Measurement (DB-423-A)

Table Name: VALUE_DB423A **Maximum Rows: 1**

Field Description	Field Name	Datatype	Length	Values	Required
Measure Unit	measure_unit	nvarchar	100	{Inches, Millimeters}	FALSE
Pavement Depth	pavement_depth	decimal	(19, 8)		TRUE
Stamp Code	stamp_code	int		CVL	FALSE
Tested By	tested_by	nvarchar	100	CVL	TRUE
Tested Date	tested_date	datetime		MM/dd/yyyy	TRUE

Table Name: VALUE_DB423A_LOCATION **Maximum Rows: 1**

Field Description	Field Name	Datatype	Length	Values	Required
Average	average	decimal	(19, 8)		TRUE
Measurement 1	measurement_1	decimal	(19, 8)		FALSE
Measurement 2	measurement_2	decimal	(19, 8)		FALSE
Measurement 3	measurement_3	decimal	(19, 8)		FALSE
Measurement Identification / Location	measurement_id_location	nvarchar	100		FALSE

Soil-Cement, Soil-Lime Testing (DB-120-E) ** INACTIVE **

Table Name: VALUE_DB120E **Maximum Rows: 1**

Field Description	Field Name	Datatype	Length	Values	Required
Avg. Corrected Stress, psi:	avg_corrected_stress_psi	decimal	(19, 8)		FALSE
Percent Cement, (%)	percent_cement	decimal	(19, 8)		TRUE
Performed By DB-120-E:	performed_by	nvarchar	200		FALSE
Stamp Code	stamp_code	int		CVL	TRUE
Target Percent Cement, %:	target_percent_cement	decimal	(19, 8)		FALSE
Target Stress, psi:	target_stress_psi	decimal	(19, 8)		FALSE
Tested By	tested_by	nvarchar	200	CVL	TRUE
Tested Date	tested_date	smalldatetime		MM/dd/yyyy	TRUE

Table Name: VALUE_DB120E_SPECIMEN **Maximum Rows: 3**

Field Description	Field Name	Datatype	Length	Values	Required
Area, in.^2:	area	decimal	(19, 8)		FALSE
Avg. Corrected Stress, psi:	avg_corrected_stress	decimal	(19, 8)		FALSE
Avg. Cross Sectional Area, in^2:	avg_cross_section_area	decimal	(19, 8)		FALSE
Average Diameter, in.:	avg_diameter	decimal	(19, 8)		FALSE
Circumference, in.:	circumference	decimal	(19, 8)		FALSE
Corrected Stress, psi.:	corrected_stress	decimal	(19, 8)		FALSE
Dead Load, lbs.:	dead_load	decimal	(19, 8)		FALSE
Deformation at Max Load, in.	deformation_at_max_load	decimal	(19, 8)		FALSE
Height of Stone 1, in.	height_stone1	decimal	(19, 8)		FALSE
Height of Stone 2, in.	height_stone2	decimal	(19, 8)		FALSE
I-Strain, in./in.:	i_strain	decimal	(19, 8)		FALSE
Initial Height of Specimen, in.:	initial_height_specimen	decimal	(19, 8)		FALSE
Lateral Pressure, psi.:	lateral_pressure	decimal	(19, 8)		FALSE
Max. Load Reading, div.	max_load_reading	decimal	(19, 8)		FALSE
New Height of Specimen, in.:	new_height_specimen	decimal	(19, 8)		FALSE
% Strain , in./in.:	pct_strain	decimal	(19, 8)		FALSE
Percent Cement, (%)	percent_cement	decimal	(19, 8)		FALSE
Ring Factor, lbs./div	ring_factor	decimal	(19, 8)		FALSE
Specimen Number:	specimen_no	int			FALSE
Uncorr'd Stress, psi.:	uncorrected_stress	decimal	(19, 8)		FALSE

Soil-Lime Testing: DB-121-E (DB-121-E) ** INACTIVE **

Table Name: VALUE_DB121E **Maximum Rows: 1**

Field Description	Field Name	Datatype	Length	Values	Required
Average Corrected Strength, 00 psi	average_corrected_strength_0psi	decimal	(19, 8)		TRUE
Average Corrected Strength, 15 psi	average_corrected_strength_15psi	decimal	(19, 8)		FALSE
Classification	classification	nvarchar	100		FALSE
Cohesion, psi	cohesion_psi	decimal	(19, 8)		FALSE
Correlation Factor	correlation_factor	decimal	(19, 8)		FALSE
Grade, 00 psi	grade_0psi	nvarchar	100		FALSE
Grade, 15 psi	grade_15psi	nvarchar	100		FALSE
Internal Angle of Friction	internal_angle_friction	decimal	(19, 8)		FALSE
Stamp Code	stamp_code	int		CVL	TRUE
Tested By	tested_by	nvarchar	100	CVL	TRUE
Tested Date	tested_date	smalldatetime		MM/dd/yyyy	TRUE

Table Name: VALUE_DB121E_SPECIMEN **Maximum Rows: 8**

Field Description	Field Name	Datatype	Length	Values	Required
Area, in.^2	area	decimal	(19, 8)		FALSE
Avg. Cross Sectional Area, in^2	avg_cross_sectional_area	decimal	(19, 8)		FALSE
Average Diameter, in.	avg_diameter	decimal	(19, 8)		FALSE
Corrected Stress, psi.	corrected_stress_psi	decimal	(19, 8)		FALSE
Dry Density of Specimen, pcf	dry_density_specimen_pcf	decimal	(19, 8)		FALSE
Final Weight of Stones	final_weight_stones	decimal	(19, 8)		FALSE
Height of Stone 1, in.	height_stone1	decimal	(19, 8)		FALSE
Height of Stone 2, in.	height_stone2	decimal	(19, 8)		FALSE
I-Strain, in./in.	i_strain	decimal	(19, 8)		FALSE
Initial Height of Specimen, in.	initial_height	decimal	(19, 8)		FALSE
Lateral Pressure, psi.	lateral_pressure_psi	decimal	(19, 8)		FALSE
New Height of Specimen, in.	new_height	decimal	(19, 8)		FALSE
Moisture of Specimen, %	pct_moisture_specimen	decimal	(19, 8)		FALSE
% Strain , in./in.	pct_strain	decimal	(19, 8)		FALSE
Uncorrected Stress, psi.	uncorrected_stress_psi	decimal	(19, 8)		FALSE
Weight of Specimen	weight_specimen	decimal	(19, 8)		FALSE
Weight of Stones and Specimen	weight_stones_specimen	decimal	(19, 8)		FALSE

Density of Asphalt Stabilized Base (DB-126-E) ** INACTIVE **

Table Name: VALUE_DB126E **Maximum Rows: 1**

Field Description	Field Name	Datatype	Length	Values	Required
Percent Asphalt in Mix(max)	asphalt_pct_max	decimal	(19, 8)		FALSE
Percent Asphalt in Mix(min)	asphalt_pct_min	decimal	(19, 8)		FALSE
Broken Method	broken_method	nvarchar	20	{Fast Break, Slow Break}	FALSE
Date Broken(max)(max)	date_broken_max	smalldatetime		MM/dd/yyyy	FALSE
Date Broken(min)	date_broken_min	smalldatetime		MM/dd/yyyy	FALSE
Density of Specimen(max)	density_of_specimen_max	decimal	(19, 8)		FALSE
Density of Specimen(min)	density_of_specimen_min	decimal	(19, 8)		FALSE
Gauge Reading(max)	gague_reading_psi_max	decimal	(19, 8)		FALSE
Gauge Reading (min)	gague_reading_psi_min	decimal	(19, 8)		FALSE
Height of Specimen(max)	height_max	decimal	(19, 8)		FALSE
Height of Specimen(min)	height_min	decimal	(19, 8)		FALSE
Measured Weight(max)	measured_weight_max	decimal	(19, 8)		FALSE
Measured Weight(min)	measured_weight_min	decimal	(19, 8)		FALSE
Minimum Allowable Density	min_allowable_density	decimal	(19, 8)		FALSE
Minimum Percent Density	min_pct_density	decimal	(19, 8)		FALSE
Minimum Specimen Unconfined Compressive Strength	min_specimen_UCS	decimal	(19, 8)		FALSE
Mold Number(max)	mold_number_max	nvarchar	100		FALSE
Mold Number(min)	mold_number_min	nvarchar	100		FALSE
Date Molded(max)	molded_date_max	smalldatetime		MM/dd/yyyy	FALSE
Date Molded(min)	molded_date_min	smalldatetime		MM/dd/yyyy	FALSE
Stamp Code	stamp_code	int		CVL	FALSE
Tested By	tested_by	nvarchar	100	CVL	FALSE
Tested Date	tested_date	datetime		MM/dd/yyyy	FALSE
Unconfined Compressive Strength (max)	UCS_max	nvarchar	100		FALSE
Unconfined Compressive Strength (min)	UCS_min	nvarchar	100		FALSE
Volume of Mold(max)	volume_of_mold_max	decimal	(19, 8)		FALSE
Volume of Mold(min)	volume_of_mold_min	decimal	(19, 8)		FALSE
Volume of Specimen(max)	volume_of_specimen_max	decimal	(19, 8)		FALSE
Volume of Specimen(min)	volume_of_specimen_min	decimal	(19, 8)		FALSE
Weight of Filters(max)	weight_of_filters_max	decimal	(19, 8)		FALSE
Weight of Filters(min)	weight_of_filters_min	decimal	(19, 8)		FALSE
Weight of Material(max)	weight_of_mat_max	decimal	(19, 8)		FALSE
Weight of Material(min)	weight_of_mat_min	decimal	(19, 8)		FALSE
Weight of Plates(max)	weight_of_plates_max	decimal	(19, 8)		FALSE
Weight of Plates(min)	weight_of_plates_min	decimal	(19, 8)		FALSE
Weight of Specimen(max)	weight_of_specimen_max	decimal	(19, 8)		FALSE
Weight of Specimen(min)	weight_of_specimen_min	decimal	(19, 8)		FALSE

Sieve Analysis of Surface Treatment Aggregate (DB-200-ST) ** INACTIVE **

Table Name: VALUE_DB200ST **Maximum Rows: 1**

Field Description	Field Name	Datatype	Length	Values	Required
Sphalt	asphalt_pct	decimal	(19, 8)		FALSE
Dry Weight After Washing	dry_weight_after_washing	decimal	(19, 8)		FALSE
Moisture	moisture_pct	decimal	(19, 8)		FALSE
Original Dry Weight	orig_dry_weight	decimal	(19, 8)		FALSE
Total	pan_weight	decimal	(19, 8)		FALSE
Percent Difference	percent_difference	decimal	(19, 8)		FALSE
Sieving Loss	sieving_loss	decimal	(19, 8)		FALSE
Stamp Code	stamp_code	int		CVL	FALSE
Tested By	tested_by	nvarchar	100	CVL	FALSE
Tested Date	tested_date	datetime		MM/dd/yyyy	FALSE
Total Weight	total_weight	decimal	(19, 8)		FALSE
Type	type	nvarchar	100	{A, B, C, D, E, L, PA, PB, PC, PD, PE, PL}	FALSE
Washing Loss	washing_loss	decimal	(19, 8)		FALSE
Weight Difference	weight_difference	decimal	(19, 8)		FALSE
PrePan	weight_retained	decimal	(19, 8)		FALSE

Table Name: VALUE_DB200ST_SIEVE **Maximum Rows: 8**

Field Description	Field Name	Datatype	Length	Values	Required
Cumulative Percent Passing	cumulative_percent_passing	decimal	(19, 8)		FALSE
Lower Retained Limit	lower_retained_limit	decimal	(19, 8)		FALSE
Cumulative Percent Retained	percent_retained_cumulative	decimal	(19, 8)		FALSE
Individual Percent Retained	percent_retained_individual	decimal	(19, 8)		FALSE
Sieve Size	sieve_size	nvarchar	100		FALSE
Upper Retained Limit	upper_retained_limit	decimal	(19, 8)		FALSE
Cumulative Weight Retained	weight_retained_cumulative	decimal	(19, 8)		FALSE
Individual weight Retained	weight_retained_individual	decimal	(19, 8)		FALSE
Within Master Grading	within_master_grading	nvarchar	100		FALSE

Determining Flakiness Index (DB-224-F) ** INACTIVE **

Table Name: VALUE_DB224F **Maximum Rows: 1**

Field Description	Field Name	Datatype	Length	Values	Required
Flakiness Index	flakiness_index	decimal	(19, 8)		TRUE
Number of Particles	num_particles_1	decimal	(19, 8)		FALSE
Number of Particles	num_particles_2	decimal	(19, 8)		FALSE
Number of Particles	num_particles_3	decimal	(19, 8)		FALSE
Number of Particles Passing for 1/4" slot	slot_1_4	decimal	(19, 8)		FALSE
Number of Particles Passing for 3/8" slot	slot_3_8	decimal	(19, 8)		FALSE
Number of Particles Passing for 5/32" slot	slot_5_32	decimal	(19, 8)		FALSE
Stamp Code	stamp_code	int		CVL	TRUE
Tested By	tested_by	nvarchar	100	CVL	TRUE
Tested Date	tested_date	datetime		MM/dd/yyyy	TRUE
Total Particles	total_particles	decimal	(19, 8)		FALSE
Total Passing Particles	total_passing_particles	decimal	(19, 8)		FALSE

Determining Draindown Characteristics in Bituminous Materials (DB-235-F) ** INACTIVE **

Table Name: VALUE_DB235F **Maximum Rows: 1**

Field Description	Field Name	Datatype	Length	Values	Required
Average Percent of Draindown for Two Samples	avg_pct_draindown	decimal	(19, 8)		FALSE
Final Weight Plate	final_weight_plate_1	decimal	(19, 8)		FALSE
Final Weight Plate	final_weight_plate_2	decimal	(19, 8)		FALSE
Initial Sample Weight	init_sample_weight_1	decimal	(19, 8)		FALSE
Initial Sample Weight	init_sample_weight_2	decimal	(19, 8)		FALSE
Initial Weight Plate	init_weight_plate_1	decimal	(19, 8)		FALSE
Initial Weight Plate	init_weight_plate_2	decimal	(19, 8)		FALSE
Percent Of Draindown	pct_draindown_1	decimal	(19, 8)		FALSE
Percent Of Draindown	pct_draindown_2	decimal	(19, 8)		FALSE
Stamp Code	stamp_code	int		CVL	TRUE
Tested By	tested_by	nvarchar	100	CVL	TRUE
Tested Date	tested_date	datetime		MM/dd/yyyy	TRUE

Resistance To Degradation By Abrasion & Impact in Los Angeles Machine (DB-410-A) ** INACTIVE **

Table Name: VALUE_DB410A **Maximum Rows: 1**

Field Description	Field Name	Datatype	Length	Values	Required
Final Weight	final_weight	decimal	(19, 8)		FALSE
Initial Weight	initial_weight	decimal	(19, 8)		FALSE
La Abrasion Type	la_abrasion_type	nvarchar	100	CVL	FALSE
La Abrasion Value	la_abrasion_value	decimal	(19, 8)		FALSE
Loss of Weight	loss_of_weight	decimal	(19, 8)		FALSE
Number of Spheres	number_of_spheres	int			FALSE
Percent Loss	percent_loss	decimal	(19, 8)		FALSE
Sieve	sieve	nvarchar	100		FALSE
Stamp Code	stamp_code	int		CVL	FALSE
Tested By	tested_by	nvarchar	100	CVL	FALSE
Tested Date	tested_date	datetime		MM/dd/yyyy	FALSE
Weight of Charge	weight_of_charge	nvarchar	100		FALSE

Table Name: VALUE_DB410A_SAMPLE **Maximum Rows: 4**

Field Description	Field Name	Datatype	Length	Values	Required
Actual Weight	actual_weight	decimal	(19, 8)		FALSE
Passing Sieve	passing_sieve	nvarchar	100		FALSE
Projected Weight	projected_weight	nvarchar	100		FALSE
Retained Sieve	retained_sieve	nvarchar	100		FALSE
Within Range	within_range	bit			FALSE

Magnesium Sulfate Soundness (DB-411-M) ** INACTIVE **

Table Name: VALUE_DB411M **Maximum Rows: 1**

Field Description	Field Name	Datatype	Length	Values	Required
Normalized Individual Percent Retained Total	ni_pct_retained_total	decimal	(19, 8)		FALSE
% Loss Total	pct_loss_total	decimal	(19, 8)		FALSE
Soundness Loss	soundness_loss	decimal	(19, 8)		FALSE
Stamp Code	stamp_code	int		CVL	TRUE
Tested By	tested_by	nvarchar	100	CVL	TRUE
Tested Date	tested_date	smalldatetime		MM/dd/yyyy	TRUE
Weighted Average % Loss Total	weighted_avg_pct_loss_total	decimal	(19, 8)		FALSE

Table Name: VALUE_DB411M_CYCLE **Maximum Rows: 5**

Field Description	Field Name	Datatype	Length	Values	Required
Cycle	cycle	nvarchar	5		FALSE
In Oven Date	in_oven_date	smalldatetime		MM/dd/yyyy	FALSE
In Oven Time In	in_oven_time_in	smalldatetime		MM/dd/yyyy	FALSE
In Oven Time Out	in_oven_time_out	smalldatetime		MM/dd/yyyy	FALSE
In Solution Date	in_solution_date	smalldatetime		MM/dd/yyyy	FALSE
In Solution Time In	in_solution_time_in	smalldatetime		MM/dd/yyyy	FALSE
In Solution Time Out	in_solution_time_out	smalldatetime		MM/dd/yyyy	FALSE
Out Oven Date	out_oven_date	smalldatetime		MM/dd/yyyy	FALSE
Out Oven Time In	out_oven_time_in	smalldatetime		MM/dd/yyyy	FALSE
Out Oven Time Out	out_oven_time_out	smalldatetime		MM/dd/yyyy	FALSE
Out Solution Date	out_solution_date	smalldatetime		MM/dd/yyyy	FALSE
Out Solution Time In	out_solution_time_in	smalldatetime		MM/dd/yyyy	FALSE
Out Solution Time Out	out_solution_time_out	smalldatetime		MM/dd/yyyy	FALSE
Remarks	remarks	nvarchar	250		FALSE

Table Name: VALUE_DB411M_PARTICLE **Maximum Rows: 8**

Field Description	Field Name	Datatype	Length	Values	Required
Final Weight (g)	final_weight	decimal	(19, 8)		FALSE
Initial Weight (g)	initial_weight	decimal	(19, 8)		FALSE
Loss of Weight (g)	loss_of_weight	decimal	(19, 8)		FALSE
Normalized Individual Percent Retained	ni_pct_retained	decimal	(19, 8)		FALSE
% Loss	pct_loss	decimal	(19, 8)		FALSE
Particle Size Range Passing	size_range_passing	nvarchar	100		FALSE
Particle Size Range Retained	size_range_retained	nvarchar	100		FALSE
Weighted Average % Loss	weighted_avg_pct_loss	decimal	(19, 8)		FALSE

Testing Of Drilled Cores Of Portland Cement Concrete (DB-424-A, Part III) ** INACTIVE **

Table Name: VALUE_DB424A **Maximum Rows: 1**

Field Description	Field Name	Datatype	Length	Values	Required
Stamp Code	stamp_code	int		CVL	FALSE
Tested By	tested_by	nvarchar	100	CVL	FALSE
Tested By - Part II	tested_by_part2	nvarchar	100	CVL	FALSE
Tested By - Part III	tested_by_part3	nvarchar	100	CVL	FALSE
Tested Date	tested_date	datetime		MM/dd/yyyy	FALSE
Tested Date - Part II	tested_date_part2	datetime		MM/dd/yyyy	FALSE
Tested Date - Part III	tested_date_part3	datetime		MM/dd/yyyy	FALSE

Table Name: VALUE_DB424A_CORE **Maximum Rows: 4**

Field Description	Field Name	Datatype	Length	Values	Required
Age (Days)	age	int			FALSE
Compressive Strength	compressive_strength1	decimal	(19, 8)		FALSE
Compressive Strength	compressive_strength2	decimal	(19, 8)		FALSE
Diameter of Core (inches)	core_diameter1	decimal	(19, 8)		FALSE
Diameter of Core (inches)	core_diameter2	decimal	(19, 8)		FALSE
Length of Core (inches)	core_length1	decimal	(19, 8)		FALSE
Length of Core (inches)	core_length2	decimal	(19, 8)		FALSE
Core Number	core_number1	nvarchar	100		FALSE
Core Number	core_number2	nvarchar	100		FALSE
Failure Type	failure_type1	nvarchar	100		FALSE
Failure Type	failure_type2	nvarchar	100		FALSE
Max Load (Lbs)	max_load1	decimal	(19, 8)		FALSE
Max Load (Lbs)	max_load2	decimal	(19, 8)		FALSE

Texture Depth By Sand Patch Method (DB-436-A) ** INACTIVE **

Table Name: VALUE_DB436A **Maximum Rows: 1**

Field Description	Field Name	Datatype	Length	Values	Required
Average Diameter	avg_diameter	decimal	(19, 8)		FALSE
Diameter 1	measurement_1	decimal	(19, 8)		FALSE
Diameter 2	measurement_2	decimal	(19, 8)		FALSE
Diameter 3	measurement_3	decimal	(19, 8)		FALSE
Diameter 4	measurement_4	decimal	(19, 8)		FALSE
Stamp Code	stamp_code	int		CVL	FALSE
Tested By	tested_by	varchar	200	CVL	FALSE
Tested Date	tested_date	smalldatetime		MM/dd/yyyy	FALSE
Thickness	thickness	decimal	(19, 8)		FALSE
Volume of Cylinder	vol_cylinder	decimal	(19, 8)		FALSE

Concrete Sample - Beams (DB-448-A) ** INACTIVE **

Table Name: VALUE_DB448A **Maximum Rows: 1**

Field Description	Field Name	Datatype	Length	Values	Required
Actual Water	act_water	decimal	(19, 8)		FALSE
Added Gal	added_gal	decimal	(19, 8)		FALSE
Agg. Correction Factor	agg_corr_factor	decimal	(19, 8)	CVL	FALSE
Agg Size	agg_size	nvarchar	100	CVL	FALSE
Air Temperature	air_temp	decimal	(19, 8)		FALSE
Batch Size	batch_size	decimal	(19, 8)		FALSE
Batch Time	batch_time	smalldatetime		MM/dd/yyyy	FALSE
Class of Concrete	class_concrete	nvarchar	100	CVL	FALSE
Concrete Temperature	concrete_temp	decimal	(19, 8)		FALSE
Corrected Air Content	corrected_air_content	decimal	(19, 8)	CVL	FALSE
Design Water	des_water	decimal	(19, 8)		FALSE
Mix ID	mix_id	nvarchar	100	CVL	FALSE
Qty Load	qty_load	decimal	(19, 8)		FALSE
Req. Strength, psi	req_strength	decimal	(19, 8)		FALSE
Sample Time	sample_time	smalldatetime		MM/dd/yyyy	FALSE
Slump	slump	decimal	(19, 8)	CVL	FALSE
Specimen Dimensions	spec_dimensions	nvarchar	100	CVL	FALSE
Stamp Code	stamp_code	int		CVL	FALSE
Tested By	tested_by	nvarchar	100	CVL	FALSE
Tested Date	tested_date	datetime		MM/dd/yyyy	FALSE
Ticket Number	ticket_num	decimal	(19, 8)		FALSE
Total Water	total_water	decimal	(19, 8)		FALSE
Truck Number	truck_num	decimal	(19, 8)		FALSE
Unit Weight	unit_weight	decimal	(19, 8)		FALSE

Table Name: VALUE_DB448A_SPECIMEN **Maximum Rows: 6**

Field Description	Field Name	Datatype	Length	Values	Required
Age	age	nvarchar	100	CVL	FALSE
Avg Depth	avg_depth	decimal	(19, 8)		FALSE
Avg. Width	avg_width	decimal	(19, 8)		FALSE
Correction Factor	corr_factor	decimal	(19, 8)		FALSE
Max Load, lbs	max_load_psi	decimal	(19, 8)		FALSE
Mod Rupture	mod_rupture	decimal	(19, 8)		FALSE
Pass Fail	pass_fail	nvarchar	100		FALSE
Specimen	specimen	nvarchar	100		FALSE
Test Date	test_date	smalldatetime		MM/dd/yyyy	FALSE
Tested By	tested_by	nvarchar	100	CVL	FALSE

Coarse Aggregate Angularity By Fractured Faces Count (DB-460-A) ** INACTIVE **

Table Name: VALUE_DB460A **Maximum Rows: 1**

Field Description	Field Name	Datatype	Length	Values	Required
Number of Particles w/ one or no FF	number_of_particles_with_one	int			FALSE
Number of Particles w/ 2 or more FF	number_of_particles_with_two	int			FALSE
Number of Questionable Particles	number_of_questionable_particles	int			FALSE
Percent Crushed Particles	percent_crushed_particles	decimal	(19, 8)		FALSE
Percent Crushed Particles	percent_crushed_particles_result	decimal	(19, 8)		TRUE
Sieve Size	sieve_size	nvarchar	100		FALSE
Stamp Code	stamp_code	int		CVL	TRUE
Tested By	tested_by	nvarchar	100	CVL	TRUE
Tested Date	tested_date	smalldatetime		MM/dd/yyyy	TRUE
Total Number of Particles	total_number_of_particles	int			FALSE

Effect of Water On Bituminous Paving Mixtures (DB-530-C) ** INACTIVE **

Table Name: VALUE_DB530C **Maximum Rows: 1**

Field Description	Field Name	Datatype	Length	Values	Required
Estimated Percent of Stripping	est_pct_stripping	nvarchar	100		FALSE
Stamp Code	stamp_code	int		CVL	FALSE
Tested By	tested_by	nvarchar	100	CVL	FALSE
Tested Date	tested_date	datetime		MM/dd/yyyy	FALSE

Determining Chloride and Sulfate Content in Soils (DB-620-J) ** INACTIVE **

Table Name: VALUE_DB620J **Maximum Rows: 1**

Field Description	Field Name	Datatype	Length	Values	Required
Chloride (CL) (PPM)	chloride_ppm	decimal	(19, 8)		FALSE
Crucible + Residue Weight	crucible_residue_weight	decimal	(19, 8)		FALSE
Crucible Weight	crucible_weight	decimal	(19, 8)		FALSE
Ending	ending	decimal	(19, 8)		FALSE
Normality of AgNO3	normality_of_agno3	decimal	(19, 8)		FALSE
Residue Weight	residue_weight	decimal	(19, 8)		FALSE
Sample Weight	sample_weight_chloride	decimal	(19, 8)		FALSE
Sample Weight	sample_weight_sulfate	decimal	(19, 8)		FALSE
Stamp Code	stamp_code	int		CVL	FALSE
Starting	starting	decimal	(19, 8)		FALSE
Sulfate (SO4) (PPM)	sulfate_ppm	decimal	(19, 8)		FALSE
Tested By	tested_by	nvarchar	100	CVL	FALSE
Tested Date	tested_date	nvarchar	100		FALSE
Total	total	decimal	(19, 8)		FALSE

CQAF Sample

File: CQAFSample.xml
File Type: XML (Extensible Markup Language). The de facto standard for transferring data.
File Description: An example of an electronic submission that can be read into I2MS. The example provided was used for a previous project and passed the verification process for that particular project's inputs. This file can be submitted to I2MS via a web service run on I2MS using SOAP (Simple Object Access Protocol), which is a standard programming protocol by which software developers send data between systems.

CQAF Sample

```
<?xml version='1.0' encoding='UTF-8'?>
<form name="DB-115-1" version_no="1.0" key="0020905270501151" date="2009-05-27T00:00:00" display_key="00209052705">
	<owner_name value="CQAF" />
	<security username="CQAFDataXfer" password="as9-3958$h@" />
	<header>
		<column name="sample_id" value="00209052705" />
		<column name="sampled_date" value="5/27/2009 12:00:00 AM" />
		<column name="sample_type" value="Random-Independent" />
		<column name="split_sample_id" />
		<column name="report_type" value="Original" />
		<column name="section" value="5.1" />
		<column name="sampled_by" value="Al Jones" />
		<column name="spec_year" value="2004" />
		<column name="material" value="14" />
		<column name="spec_item" value="247" />
		<column name="supplier" value="Pit" />
		<column name="special_provision" />
		<column name="structure_number" />
		<column name="grade" value="1" />
		<column name="sample_location" />
		<column name="feature" value="Mainlane" />
		<column name="course_lift" value="2" />
		<column name="station" value="342+49" />
		<column name="dist_from_cl" value="5' LT" />
		<column name="misc" />
		<column name="roadway" value="Loop 375" />
		<column name="direction" value="NB" />
	</header>
	<test name="DB-115-1">  <!-- This can be the same value as the form name. -->
		<table name="VALUE_DB115_1">
			<row>
				<column  name="determined_by_test_method"  value="DB-113-E" />
				<column name="max_dry_density_pcf" value="132.5" />
				<column name="optimum_moisture_content_pct" value="7.7" />
				<column name="density_standard" value="4200" />
				<column name="moisture_standard" value="420" />
				<column name="density_count" value="1045" />
				<column name="moisture_count" value="231" />
				<column name="probe_depth" value="10" />
				<column name="wet_density_pcf" value="140.5" />
				<column name="dry_density_pcf" value="133.5" />
				<column name="moisture_content_pct" value="5.2" />
				<column name="gauge_no" value="3242" />
				<column name="moisture_content_pct_pass_fail" />
				<column name="density_pct" value="100.7" />
				<column name="density_pct_pass_fail" />
```

CQAF Sample

```
                        <column name="density_specification_req_max" />
                        <column name="moisture_specification_req_max" />
                        <column name="soil_desc" />
                        <column name="density_specification_req_min" value="100" />
                        <column name="moisture_specification_req_min" value="5.2" />
                        <column name="tested_by" value="Al Jones" />
                        <column name="tested_date" value="5/27/2009 12:00:00 AM" />
                        <column name="stamp_code" value="1" />
                    </row>
                </table>
            </test>
            <footer>
                <column name="remarks" />
                <column name="reviewed_by" />
                <column name="completed_date" />
                <column name="authorized_by" />
                <column name="authorized_date" />
            </footer>
</form>
```

Web Form Validation

File: WebFormValidation.xsd
File Type: XSD (XML Schema Document). Describes a schema used for an XML document.
File Description: Describes elements, annotations, and documentation used in the aforementioned XML. XSD files are the standard used to describe XML file formats and are often used to assist in developing XML files with added features such as intellisense (which is an added type ahead feature used by developers).

Web Form Validation

```
<?xml version="1.0" encoding="utf-8"?>
<xs:schema id="FormValidation" xmlns:xs="http://www.w3.org/2001/XMLSchema">
   <xs:element name="form">
      <xs:complexType>
         <xs:sequence>
            <xs:choice minOccurs="1" maxOccurs="1" id="owner">
                  <xs:annotation>
                        <xs:documentation>
                              The owner of the record must be supplied to upload successfully. The user login provided in the security element
                              must have permission to add a record for the owner as part of the validation process.

                              The record owner can be identified by a variety of properties.  In general, when submitting XML from an external source,
                              the owner_name attribute is the preferred method.
                        </xs:documentation>
                  </xs:annotation>
               <xs:element name="owner_name" minOccurs="1" maxOccurs="1">
                  <xs:annotation>
                        <xs:documentation>
                              The name of the owner of this record.  For example, "OVF" or "CQAF".
                        </xs:documentation>
                  </xs:annotation>
                  <xs:complexType>
                     <xs:attribute name="value" type="xs:string" use="required" />
                  </xs:complexType>
               </xs:element>
               <xs:element name="owner_guid" minOccurs="1" maxOccurs="1">
                  <xs:complexType>
                     <xs:attribute name="value" type="xs:string" use="required" />
                  </xs:complexType>
               </xs:element>
               <xs:element name="owner_id" minOccurs="1" maxOccurs="1">
                  <xs:complexType>
                     <xs:attribute name="value" type="xs:int" use="required" />
                  </xs:complexType>
               </xs:element>
            </xs:choice>
            <xs:element name="security" minOccurs="1" maxOccurs="1">
                  <xs:annotation>
                        <xs:documentation>
                              User login credentials must be provided to upload a record. Supply a username and password.
                        </xs:documentation>
                  </xs:annotation>
               <xs:complexType>
```

```
            <xs:attribute name="user_guid" type="xs:string" />
            <xs:attribute name="username" type="xs:string" />
            <xs:attribute name="password" type="xs:string" />
        </xs:complexType>
    </xs:element>
    <xs:element name="header" minOccurs="0" maxOccurs="1">
        <xs:annotation>
            <xs:documentation>
                The collection of header column values common to multiple forms.
            </xs:documentation>
        </xs:annotation>
        <xs:complexType>
            <xs:sequence>
                <xs:element name="column" type="ColumnType" maxOccurs="unbounded" />
            </xs:sequence>
        </xs:complexType>
    </xs:element>
    <xs:element name="test" minOccurs="0" maxOccurs="unbounded">
        <xs:annotation>
            <xs:documentation>
                Container element for Body Table elements, which contain the data specific to the form type being uploaded.
                This element can be used to logically group the body tables by the test method they represent, but it is not required to do so.
                All body table elements can be placed under one test element, and the test name attribute is inconsequential.
            </xs:documentation>
        </xs:annotation>
        <xs:complexType>
            <xs:sequence>
                <xs:element name="table" minOccurs="1" maxOccurs="unbounded">
                    <xs:annotation>
                        <xs:documentation>
                            A collection of rows of form data for a specific table.

                            The number of rows permitted for each table depends on the form and table name. For testing forms, the number of rows allowed for each table can be found in the I2MS Test Form Fields report.
                        </xs:documentation>
                    </xs:annotation>
                    <xs:complexType>
                        <xs:sequence>
                            <xs:element name="row" minOccurs="0" maxOccurs="unbounded">
                                <xs:annotation>
                                    <xs:documentation>
                                        A collection of body column values.
                                    </xs:documentation>
                                </xs:annotation>
```

Web Form Validation

```
                                    <xs:complexType>
                                    <xs:sequence>
                                       <xs:element name="column" type="ColumnType"
minOccurs="0" maxOccurs="unbounded" />
                                    </xs:sequence>
                                 </xs:complexType>
                              </xs:element>
                           </xs:sequence>
                           <xs:attribute name="name" type="xs:string" use="required">
                                 <xs:annotation>
                                       <xs:documentation>
                                             The name of the body table.

                                             For testing forms, the list of supported table names
can be found in the I2MS Test Form Fields report.
                                       </xs:documentation>
                                 </xs:annotation>
                           </xs:attribute>
                        </xs:complexType>
                     </xs:element>
                  </xs:sequence>
                  <xs:attribute name="name" type="xs:string" use="required" />
               </xs:complexType>
            </xs:element>
            <xs:element name="footer" minOccurs="0" maxOccurs="1">
               <xs:annotation>
                     <xs:documentation>
                           The collection of footer column values common to multiple forms.
                     </xs:documentation>
               </xs:annotation>
               <xs:complexType>
                  <xs:sequence>
                     <xs:element name="column" type="ColumnType" minOccurs="0"
maxOccurs="unbounded" />
                  </xs:sequence>
               </xs:complexType>
            </xs:element>
         </xs:sequence>
         <xs:attribute name="name" form="unqualified" type="xs:string" use="required" >
               <xs:annotation>
                     <xs:documentation>
                           The short name of the I2MS form for which data is being
submitted.  This value determines the data columns that are supported and required
                           for the header, body, and footer elements.

                           For testing forms, the list of supported form names can be found
in the I2MS Test Form Fields report.
```

Web Form Validation

The form name is the value in parentheses for each subheading under the Body Fields section.

```
                </xs:documentation>
            </xs:annotation>
        </xs:attribute>
        <xs:attribute name="key" form="unqualified" use="required">
            <xs:annotation>
                <xs:documentation>
                    A value representing the test record in I2MS.  This value is required to be unique for each owner (OVF/CQAF).
                    The same key is used for all revisions of the record.  To add a new revision, supply the same key with the new form data and a
                    new value for the version_no attribute.
                </xs:documentation>
            </xs:annotation>
            <xs:simpleType>
                <xs:restriction base="xs:string">
                    <xs:maxLength value="100"></xs:maxLength>
                </xs:restriction>
            </xs:simpleType>
        </xs:attribute>
        <xs:attribute name="version_no" use="required">
            <xs:annotation>
                <xs:documentation>
                    The version number of this revision within the series of revisions identified by the key attribute.
                    The revision in the series with the greatest version number will be considered the latest revision regardless of the order in which revisions were submitted to I2MS.
                    Submitting a record with the same key and version number as another record in the system is an error.
                </xs:documentation>
            </xs:annotation>
            <xs:simpleType>
                <xs:restriction base="xs:decimal">
                    <xs:totalDigits value="19" />
                    <xs:fractionDigits value="9" />
                </xs:restriction>
            </xs:simpleType>
        </xs:attribute>
        <xs:attribute name="display_key">
            <xs:annotation>
                <xs:documentation>
                    The value displayed to users as the ID value of the record (for example, Sample ID for testing forms).
                    This value is not required to be unique.
                </xs:documentation>
            </xs:annotation>
            <xs:simpleType>
                <xs:restriction base="xs:string">
```

```
                        <xs:maxLength value="100"></xs:maxLength>
                    </xs:restriction>
                </xs:simpleType>
            </xs:attribute>
            <xs:attribute name="version_key">
                <xs:annotation>
                    <xs:documentation>
                        An optional identifier for this revision.  For example, when submitting XML to I2MS from an external source,
                        this could be the Version ID of the record in the external system.
                    </xs:documentation>
                </xs:annotation>
                <xs:simpleType>
                    <xs:restriction base="xs:string">
                        <xs:maxLength value="100"></xs:maxLength>
                    </xs:restriction>
                </xs:simpleType>
            </xs:attribute>
            <xs:attribute name="action_name" type="xs:string">
                <xs:annotation>
                    <xs:documentation>
                        The name of a custom workflow action to execute when submitting the form.  The user login submitting the form
                        must have permissions in I2MS for the action and validation rules must pass before allowing the action.

                        When submitting XML to I2MS from an external source, this attribute should generally be omitted unless other
                        instructions have been provided.
                    </xs:documentation>
                </xs:annotation>
            </xs:attribute>
            <xs:attribute name="date" type="xs:dateTime">
                <xs:annotation>
                    <xs:documentation>
                        The value displayed to users as the date of the record (for example, Sampled Date for testing forms).
                    </xs:documentation>
                </xs:annotation>
            </xs:attribute>
        </xs:complexType>
    </xs:element>

            <xs:complexType name="ColumnType">
            <xs:attribute name="name" type="xs:string" use="required">
                <xs:annotation>
                    <xs:documentation>
                        The name of the column for which a value is being provided.
```

Web Form Validation

For testing forms, the list of supported data columns can be found in the I2MS Test Form Fields report.

```
                    </xs:documentation>
                </xs:annotation>
            </xs:attribute>
        <xs:attribute name="value" type="xs:string" use="optional">
            <xs:annotation>
                <xs:documentation>
                    The value of the column.
                </xs:documentation>
            </xs:annotation>
        </xs:attribute>
            </xs:complexType>

</xs:schema>
```

Form Submission Service

File: FormSubmissionService.wsdl
File Type: WSDL (Web Services Description Language). Describes a web service and its respective protocols in XML format.
File Description: Describes the web service used by I2MS for submitting data electronically for the purposes of Validation (i.e. Verification) and Submission. The I2MS system takes in data electronically via a web service (often via the SOAP protocol), for the purposes of verifying or submitting a test (submitted in XML format).

Form Submission Service

```
<?xml version="1.0" encoding="utf-8"?>
<wsdl:definitions xmlns:s="http://www.w3.org/2001/XMLSchema"
xmlns:soap12="http://schemas.xmlsoap.org/wsdl/soap12/"
xmlns:mime="http://schemas.xmlsoap.org/wsdl/mime/" xmlns:tns="http://tempuri.org/"
xmlns:soap="http://schemas.xmlsoap.org/wsdl/soap/"
xmlns:tm="http://microsoft.com/wsdl/mime/textMatching/"
xmlns:http="http://schemas.xmlsoap.org/wsdl/http/"
xmlns:soapenc="http://schemas.xmlsoap.org/soap/encoding/"
targetNamespace="http://tempuri.org/" xmlns:wsdl="http://schemas.xmlsoap.org/wsdl/">
  <wsdl:types>
    <s:schema elementFormDefault="qualified" targetNamespace="http://tempuri.org/">
      <s:element name="SubmitForm">
        <s:complexType>
          <s:sequence>
            <s:element minOccurs="0" maxOccurs="1" name="xmlForm" type="s:string" />
          </s:sequence>
        </s:complexType>
      </s:element>
      <s:element name="SubmitFormResponse">
        <s:complexType>
          <s:sequence>
            <s:element minOccurs="1" maxOccurs="1" name="SubmitFormResult" type="s:int" />
          </s:sequence>
        </s:complexType>
      </s:element>
      <s:element name="ValidateForm">
        <s:complexType>
          <s:sequence>
            <s:element minOccurs="0" maxOccurs="1" name="xmlForm" type="s:string" />
          </s:sequence>
        </s:complexType>
      </s:element>
      <s:element name="ValidateFormResponse">
        <s:complexType>
          <s:sequence>
            <s:element minOccurs="0" maxOccurs="1" name="ValidateFormResult" type="s:string"
/>
          </s:sequence>
        </s:complexType>
      </s:element>
    </s:schema>
  </wsdl:types>
  <wsdl:message name="SubmitFormSoapIn">
    <wsdl:part name="parameters" element="tns:SubmitForm" />
  </wsdl:message>
  <wsdl:message name="SubmitFormSoapOut">
    <wsdl:part name="parameters" element="tns:SubmitFormResponse" />
  </wsdl:message>
```

Form Submission Service

```
 <wsdl:message name="ValidateFormSoapIn">
   <wsdl:part name="parameters" element="tns:ValidateForm" />
  </wsdl:message>
  <wsdl:message name="ValidateFormSoapOut">
   <wsdl:part name="parameters" element="tns:ValidateFormResponse" />
  </wsdl:message>
  <wsdl:portType name="FormSubmissionServiceSoap">
   <wsdl:operation name="SubmitForm">
    <wsdl:input message="tns:SubmitFormSoapIn" />
    <wsdl:output message="tns:SubmitFormSoapOut" />
   </wsdl:operation>
   <wsdl:operation name="ValidateForm">
    <wsdl:input message="tns:ValidateFormSoapIn" />
    <wsdl:output message="tns:ValidateFormSoapOut" />
   </wsdl:operation>
  </wsdl:portType>
  <wsdl:binding                                          name="FormSubmissionServiceSoap"
type="tns:FormSubmissionServiceSoap">
   <soap:binding transport="http://schemas.xmlsoap.org/soap/http" />
   <wsdl:operation name="SubmitForm">
    <soap:operation soapAction="http://tempuri.org/SubmitForm" style="document" />
    <wsdl:input>
     <soap:body use="literal" />
    </wsdl:input>
    <wsdl:output>
     <soap:body use="literal" />
    </wsdl:output>
   </wsdl:operation>
   <wsdl:operation name="ValidateForm">
    <soap:operation soapAction="http://tempuri.org/ValidateForm" style="document" />
    <wsdl:input>
     <soap:body use="literal" />
    </wsdl:input>
    <wsdl:output>
     <soap:body use="literal" />
    </wsdl:output>
   </wsdl:operation>
  </wsdl:binding>
  <wsdl:binding                                        name="FormSubmissionServiceSoap12"
type="tns:FormSubmissionServiceSoap">
   <soap12:binding transport="http://schemas.xmlsoap.org/soap/http" />
   <wsdl:operation name="SubmitForm">
    <soap12:operation soapAction="http://tempuri.org/SubmitForm" style="document" />
    <wsdl:input>
     <soap12:body use="literal" />
    </wsdl:input>
    <wsdl:output>
     <soap12:body use="literal" />
```

Form Submission Service

```
  </wsdl:output>
    </wsdl:operation>
    <wsdl:operation name="ValidateForm">
      <soap12:operation soapAction="http://tempuri.org/ValidateForm" style="document" />
      <wsdl:input>
        <soap12:body use="literal" />
      </wsdl:input>
      <wsdl:output>
        <soap12:body use="literal" />
      </wsdl:output>
    </wsdl:operation>
  </wsdl:binding>
  <wsdl:service name="FormSubmissionService">
    <wsdl:port                                          name="FormSubmissionServiceSoap"
binding="tns:FormSubmissionServiceSoap">
      <soap:address                                                  location="https://i2ms-
sh130.txdot.gov/i2ms/i2ms/formsubmissionservice.asmx" />
    </wsdl:port>
    <wsdl:port                                        name="FormSubmissionServiceSoap12"
binding="tns:FormSubmissionServiceSoap12">
      <soap12:address                                                location="https://i2ms-
sh130.txdot.gov/i2ms/i2ms/formsubmissionservice.asmx" />
    </wsdl:port>
  </wsdl:service>
</wsdl:definitions>
```

Texas Department of Transportation
Book 2 - Technical Provisions

IH 35E Managed Lanes Project

Attachment 4-1

Special Specification 1122
Temporary Erosion, Sedimentation, and Environmental Controls

SPECIAL SPECIFICATION

1122

Temporary Erosion, Sedimentation, and Environmental Controls

1. Description. Install, maintain, and remove erosion, sedimentation, and environmental control measures to prevent or reduce the discharge of pollutants in accordance with the Storm Water Pollution Prevention Plan (SWP3) as provided in the plans and the Texas Pollutant Discharge Elimination System (TPDES) General Permit TXR150000. Control measures are defined as Best Management Practices used to prevent or reduce the discharge of pollutants. Control measures include but are not limited to rock filter dams, temporary pipe slope drains, temporary paved flumes, construction exits, earthwork for erosion control, pipe, construction perimeter fence, sandbags, temporary sediment control fence, biodegradable erosion control logs, vertical tracking, temporary or permanent seeding, and other measures. Perform work in a manner to prevent degradation of receiving waters, facilitate project construction, and comply with applicable federal, state, and local regulations. Ensure the installation and maintenance of control measures is performed in accordance with the manufacturer's or designer's specifications.

By signing the Contractor Certification of Compliance, the Contractor certifies they have read and understand the requirements applicable to this project pertaining to the SWP3, the plans, and the TPDES General Permit TXR150000. The Contractor is responsible for any penalties associated with non-performance of installation or maintenance activities required for compliance. Provide the Contractor Certification of Compliance to the Engineer prior to performing earthwork operations. The most current version of the Contractor Certification of Compliance can be found at http://txdot.gov/business/ems_courses.htm. A sample of the language has been attached to this specification. Ensure the most current version of the certificate is executed for this project.

2. Materials. Furnish materials in accordance with the following:

- Item 161, "Compost"
- Item 432, "Riprap"
- Item 556, "Pipe Underdrains"

A. Rock Filter Dams.

1. Aggregate. Furnish aggregate with hardness, durability, cleanliness, and resistance to crumbling, flaking, and eroding acceptable to the Engineer. Provide the following:

- **Types 1, 2, and 4 Rock Filter Dams.** Use 3 to 6 in. aggregate.
- **Type 3 Rock Filter Dams.** Use 4 to 8 in. aggregate.

2. Wire. Provide minimum 20 gauge galvanized wire for the steel wire mesh and tie wires for Types 2 and 3 rock filter dams. Type 4 dams require:

- A double-twisted, hexagonal weave with a nominal mesh opening of 2-1/2 in. x 3-1/4 in.;
- Minimum 0.0866 in. steel wire for netting;
- Minimum 0.1063 in. steel wire for selvages and corners; and minimum 0.0866 in. for binding or tie wire.

3. Sandbag Material. Furnish sandbags meeting "Sandbags for Erosion Control," except that any gradation of aggregate may be used to fill the sandbags.

B. Temporary Pipe Slope Drains. Provide corrugated metal pipe, polyvinyl chloride (PVC) pipe, flexible tubing, watertight connection bands, grommet materials, prefabricated fittings, and flared entrance sections that conform to the plans. Recycled and other materials meeting these requirements are allowed if approved.

Furnish concrete in accordance with Item 432, "Riprap."

C. Temporary Paved Flumes. Furnish asphalt concrete, hydraulic cement concrete, or other comparable non-erodible material that conforms to the plans. Provide rock or rubble with a minimum diameter of 6 in. and a maximum volume of 1/2 cu. ft. for the construction of energy dissipaters.

D. Construction Exits. Provide materials that meet the details shown on the plans and this Section.

1. Rock Construction Exit. Provide crushed aggregate for long and short-term construction exits. Furnish aggregates that are clean, hard, durable, and free from adherent coatings such as salt, alkali, dirt, clay, loam, shale, soft or flaky materials and organic and injurious matter. Use 4- to 8-in. aggregate for Type 1 and 2- to 4-in. aggregate for Type 3.

2. Timber Construction Exit. Furnish No. 2 quality or better railroad ties and timbers for long-term construction exits, free of large and loose knots and treated to control rot. Fasten timbers with nuts and bolts or lag bolts, of at least 1/2 in. diameter, unless otherwise shown on the plans or allowed. For short-term exits, provide plywood or pressed wafer board at least 1/2 in. thick.

3. Foundation Course. Provide a foundation course consisting of flexible base, bituminous concrete, hydraulic cement concrete, or other materials as shown on the plans or directed.

E. Embankment for Erosion Control. Provide rock, loam, clay, topsoil, or other earth materials that will form a stable embankment to meet the intended use.

F. Pipe. Provide pipe outlet material in accordance with Item 556, "Pipe Underdrains," and details shown on the plans.

G. Construction Perimeter Fence.

1. **Posts.** Provide essentially straight wood or steel posts that are at least 60 in. long. Furnish soft wood posts with a minimum diameter of 3 in. or use 2 x 4 boards. Furnish hardwood posts with a minimum cross-section of 1-1/2 x 1-1/5 in. Furnish T- or L-shaped steel posts with a minimum weight of 1.3 lb. per foot.

2. **Fence.** Provide orange construction fencing as approved by the Engineer.

3. **Fence Wire.** Provide 12-1/2 gauge or larger galvanized smooth or twisted wire. Provide 16 gauge or larger tie wire.

4. **Flagging.** Provide brightly-colored flagging that is fade-resistant and at least 3/4 in. wide to provide maximum visibility both day and night.

5. **Staples.** Provide staples with a crown at least 1/2 in. wide and legs at least 1/2 in. long.

6. **Used Materials.** Previously used materials meeting the applicable requirements may be used if accepted by the Engineer.

H. Sandbags. Provide sandbag material of polypropylene, polyethylene, or polyamide woven fabric with a minimum unit weight of 4 oz. per square yard, a Mullen burst-strength exceeding 300 psi, and an ultraviolet stability exceeding 70%.

Use natural coarse sand or manufactured sand meeting the gradation given in Table 1 to fill sandbags. Filled sandbags must be 24 to 30 in. long, 16 to 18 in. wide, and 6 to 8 in. thick.

Table 1
Sand Gradation

Sieve #	Retained (% by Weight)
4	MAXIMUM 3%
100	MINIMUM 80%
200	MINIMUM 95%

Aggregate may be used in lieu of sand for situations where sandbags are not adjacent to traffic. The aggregate size shall not exceed 3/8 in.

I. Temporary Sediment Control Fence. Provide a net-reinforced fence using woven geo-textile fabric. Logos visible to the traveling public will not be allowed.

1. **Fabric.** Provide fabric materials in accordance with DMS-6230, "Temporary Sediment Control Fence Fabric."

2. **Posts.** Provide essentially straight wood or steel posts with a minimum length of 48 in., unless otherwise shown on the plans. Soft wood posts must be at least 3 in. in diameter or nominal 2 x 4in. Hardwood posts must have a minimum cross-section of 1-1/2 x 1-1/2 in. T- or L-shaped steel posts must have a minimum weight of 1.3 lb. per foot.

3. **Net Reinforcement.** Provide net reinforcement of at least 12-1/2 gauge galvanized welded wire mesh, with a maximum opening size of 2 x 4 in., at least 24 in. wide, unless otherwise shown on the plans.

4. **Staples.** Provide staples with a crown at least 3/4 in. wide and legs 1/2 in. long.

5. **Used Materials.** Use recycled material meeting the applicable requirements if accepted by the Engineer.

J. Biodegradable Erosion Control Logs.

1. **Core Material.** Furnish core material that is biodegradable or recyclable. Except where specifically called out in plans, material may be compost, mulch, aspen excelsior wood fibers, chipped site vegetation, agricultural rice or wheat straw, coconut fiber, 100% recyclable fibers, or any other acceptable material. No more than 5% of the material is permitted to escape from the containment mesh. Furnish compost meeting the requirements of Item 161, "Compost."

2. **Containment Mesh.** Furnish containment mesh that is 100% biodegradable, photodegradable or recyclable such as burlap, twine, UV photodegradable plastic, polyester, or any other acceptable material.

   a. Furnish biodegradable or photodegradable containment mesh when log will remain in place as part of a vegetative system.

   b. Furnish recyclable containment mesh for temporary installations.

3. **Size.** Furnish biodegradable erosion control logs with diameters shown on the plans or as directed. Stuff containment mesh densely so logs do not deform.

3. Qualifications, Training, and Employee Requirements.

A. Contractor Responsible Person Environmental (CRPe) Qualifications and Responsibilities. Provide and designate in writing at the preconstruction conference a CRPe who has overall responsibility for the storm water management program. The CRPe will identify and implement storm water and erosion control practices; will oversee and observe storm water control measure monitoring and management; will monitor the project site daily to ensure compliance with the SWP3 and TPDES General Permit TXR150000; and will document daily monitoring reports and provide the reports to the Department within 48 hours. The CRPe will provide recommendations to the Engineer on how to improve the effectiveness of control measures. Attend the Department's preconstruction conference for the project. Administer the training identified in Article 3.C. *Training.* Document and submit a list to the Engineer of employees who have completed the training. The list should include the employee's name, the training course name, and date the employee completed the training. Provide the most current list to the Engineer at the preconstruction conference or prior to earth disturbing activities. Maintain the list as needed and make available for inspection.

B. Contractor Superintendent Qualifications and Responsibilities. Provide a superintendent that is competent and has experience with and knowledge of storm water management and is knowledgeable of the requirements and the conditions of the TPDES General Permit TXR150000. The superintendent is responsible for managing and overseeing the day to day operations and activities at the project site; working with the CRPe to provide effective storm water management at the project site; representing and acting on-behalf of the Contractor; and attending the Department's preconstruction conference for the project.

C. Training. All Contractor and subcontractor employees directly involved in the earthwork activities, small or large structures, storm water control measures, and seeding activities are required to complete the training identified by the Department prior to working in the right of way. Training may take place at a location at the discretion of the Contractor.

4. Construction.

A. Contractor Responsibilities. Implement the SWP3 for the project site in accordance with in accordance with the plans and specifications, TPDES General Permit TXR150000, and as directed by the Engineer. Coordinate storm water management with all other work on the project. Develop and implement an SWP3 for project-specific material supply plants within and outside of the Department's right of way in accordance with the specific or general storm water permit requirements. Prevent water pollution from storm water associated with construction activity from entering any surface water or private property on or adjacent to the project site.

B. Implementation. The CRPe, or an alternate, must be accessible by phone and able to respond to storm water management emergencies 24 hours per day.

1. Commencement. Implement the SWP3 as shown and as directed. Contractor proposed recommendations for changes will be allowed as approved. Conform to the established guidelines in the TPDES General Permit TXR150000 to make changes. Do not implement changes until approval has been received and changes have been incorporated into the plans by the Engineer. Minor adjustments to meet field conditions are allowed and will be recorded by the Engineer in the SWP3.

2. Phasing. Implement control measures prior to the commencement of activities that result in soil disturbance. Phase and minimize the soil disturbance to the areas shown on the plans. Coordinate temporary control measures with permanent control measures and all other work activities on the project to assure economical, effective, safe, continuous water pollution prevention. Provide control measures that are appropriate to the construction means, methods, and sequencing allowed by the Contract. Exercise precaution throughout the life of the project to prevent pollution of ground waters and surface waters. Schedule and perform clearing and grubbing operations so that stabilization measures will follow immediately thereafter if project conditions permit. Bring all grading sections to final grade as soon as possible and implement temporary and permanent control measures at the earliest time possible. Implement temporary control measures when required by the TPDES General Permit TXR150000 or otherwise necessitated by project conditions.

Do not prolong final grading and shaping. Preserve vegetation where possible throughout the project and minimize clearing, grubbing, and excavation within stream banks, bed, and approach sections.

C. General.

1. **Temporary Alterations or Control Measure Removal.** Altering or removal of control measures is allowed when control measures are restored within the same working day.

2. **Stabilization.** Initiate stabilization for disturbed areas no more than 14 days after the construction activities in that portion of the site has temporarily or permanently ceased. Establish a uniform vegetative cover or utilize another stabilization practice in accordance with the TPDES General Permit TXR150000.

3. **Finished Work.** Upon the Engineer's acceptance of vegetative cover or other stabilization practice, remove and dispose of all temporary control measures unless otherwise directed. Complete soil disturbing activities and establish a uniform perennial vegetative cover. A project will not be considered for acceptance until a vegetative cover of 70% density of existing adjacent undisturbed areas is obtained or equivalent permanent stabilization is obtained in accordance with the TPDES General Permit TXR150000. An exception will be allowed in arid areas as defined in the TPDES General Permit TXR150000.

4. **Restricted Activities and Required Precautions.** Do not discharge onto the ground or surface waters any pollutants such as chemicals, raw sewage, fuels, lubricants, coolants, hydraulic fluids, bitumens, or any other petroleum product. Operate and maintain equipment on site in a manner as to prevent actual or potential water pollution. Manage, control, and dispose of litter on site such that no adverse impacts to water quality occur. Prevent dust from creating a potential or actual unsafe condition, public nuisance, or condition endangering the value, utility, or appearance of any property. Wash out concrete trucks only as described in the TPDES General Permit TXR150000. Utilize appropriate controls to minimize the offsite transport of suspended sediments and other pollutants if it is necessary to pump or channel standing water (i.e. dewatering). Prevent discharges that would contribute to a violation of Edwards Aquifer Rules, water quality standards, the impairment of a listed water body, or other state or federal law.

D. Installation, Maintenance, and Removal Work. Perform work in accordance with the SWP3, according to manufacturers' guidelines, and in accordance with the TPDES General Permit TXR150000. Install and maintain the integrity of temporary erosion and sedimentation control devices to accumulate silt and debris until earthwork construction and permanent erosion control features are in place or the disturbed area has been adequately stabilized as determined by the Engineer.

The Department will inspect and document the condition of the control measures at the frequency shown on the plans and will provide the Construction SWP3 Field Inspection and Maintenance Reports to the Contractor. Make corrections as soon as possible before the next anticipated rain event or within 7 calendar days after being able to enter the work site for each control measure.

The only acceptable reason for not accomplishing the corrections with the time frame specified is when site conditions are "Too Wet to Work". If a correction is deemed critical by the Engineer, immediate action is required. When corrections are not made within the established time frame, all work will cease on the project and time charges will continue while the control measures are brought into compliance. Once the Engineer reviews and documents the project is in compliance, work may commence. Commencing work does not release the contractor of the liability for noncompliance of the SWP3, plans, or TPDES General Permit TXR150000.

The Engineer may limit the disturbed area if in the opinion of the Engineer the Contractor cannot control soil erosion and sedimentation resulting from the Contractor's operations. Implement additional controls as directed.

Remove devices upon approval or as directed. Upon removal, finish-grade and dress the area. Stabilize disturbed areas in accordance with the permit, and as shown on the plans or directed. The Contractor retains ownership of stockpiled material and must remove it from the project when new installations or replacements are no longer required.

1. Rock Filter Dams for Erosion Control. Remove trees, brush, stumps, and other objectionable material that may interfere with the construction of rock filter dams. Place sandbags as a foundation when required or at the Contractor's option.

For Types 1, 2, 3, and 5, place the aggregate to the lines, height, and slopes specified, without undue voids. For Types 2 and 3, place the aggregate on the mesh and then fold the mesh at the upstream side over the aggregate and secure it to itself on the downstream side with wire ties, or hog rings, or as directed. Place rock filter dams perpendicular to the flow of the stream or channel unless otherwise directed. Construct filter dams according to the following criteria, unless otherwise shown on the plans:

a. Type 1 (Non-reinforced).

(1) Height. At least 18 in. measured vertically from existing ground to top of filter dam.

(2) Top Width. At least 2 ft.

(3) Slopes. At most 2:1.

b. Type 2 (Reinforced).

(1) Height. At least 18 in. measured vertically from existing ground to top of filter dam.

(2) Top Width. At least 2 ft.

(3) Slopes. At most 2:1.

c. Type 3 (Reinforced).

(1) Height. At least 36 in. measured vertically from existing ground to top of filter dam.

(2) Top Width. At least 2 ft.

(3) Slopes. At most 2:1.

d. Type 4 (Sack Gabions). Unfold sack gabions and smooth out kinks and bends. For vertical filling, connect the sides by lacing in a single loop–double loop pattern on 4- to 5-in. spacing. At one end, pull the end lacing rod until tight, wrap around the end, and twist 4 times. At the filling end, fill with stone, pull the rod tight, cut the wire with approximately 6 in. remaining, and twist wires 4 times.

For horizontal filling, place sack flat in a filling trough, fill with stone, and connect sides and secure ends as described above.

Lift and place without damaging the gabion. Shape sack gabions to existing contours.

e. Type 5. Provide rock filter dams as shown on the plans.

2. Temporary Pipe Slope Drains. Install pipe with a slope as shown on the plans or as directed. Construct embankment for the drainage system in 8-in. lifts to the required elevations. Hand-tamp the soil around and under the entrance section to the top of the embankment as shown on the plans or as directed. Form the top of the embankment or earth dike over the pipe slope drain at least 1 ft. higher than the top of the inlet pipe at all points. Secure the pipe with hold-downs or hold-down grommets spaced a maximum of 10 ft. on center. Construct the energy dissipaters or sediment traps as shown on the plans or as directed. Construct the sediment trap using concrete or rubble riprap in accordance with Item 432, "Riprap," when designated on the plans.

3. Temporary Paved Flumes. Construct paved flumes as shown on the plans or as directed. Provide excavation and embankment (including compaction of the subgrade) of material to the dimensions shown on the plans, unless otherwise indicated. Install a rock or rubble riprap energy dissipater, constructed from the materials specified above to a minimum depth of 9 in. at the flume outlet to the limits shown on the plans or as directed.

4. Construction Exits. When tracking conditions exist, prevent traffic from crossing or exiting the construction site or moving directly onto a public roadway, alley, sidewalk, parking area, or other right of way areas other than at the location of construction exits. Construct exits for either long or short-term use.

a. Long-Term. Place the exit over a foundation course, if necessary. Grade the foundation course or compacted subgrade to direct runoff from the construction exits to a sediment trap as shown on the plans or as directed. Construct exits with a

width of at least 14 ft. for one-way and 20 ft. for two-way traffic for the full width of the exit, or as directed.

(1) Type 1. Construct to a depth of at least 8 in. using crushed aggregate as shown on the plans or as directed.

(2) Type 2. Construct using railroad ties and timbers as shown on the plans or as directed.

b. Short-Term.

(1) Type 3. Construct using crushed aggregate, plywood, or wafer board. This type of exit may be used for daily operations where long-term exits are not practical.

(2) Type 4. Construct as shown on the plans or as directed.

5. Earthwork for Erosion Control. Perform excavation and embankment operations to minimize erosion and to remove collected sediments from other erosion control devices.

a. Excavation and Embankment for Erosion Control Features. Place earth dikes, swales, or combinations of both along the low crown of daily lift placement, or as directed, to prevent runoff spillover. Place swales and dikes at other locations as shown on the plans or as directed to prevent runoff spillover or to divert runoff. Construct cuts with the low end blocked with undisturbed earth to prevent erosion of hillsides. Construct sediment traps at drainage structures in conjunction with other erosion control measures as shown on the plans or as directed.

Where required, create a sediment basin providing 3,600 cu. ft. of storage per acre drained, or equivalent control measures for drainage locations that serve an area with 10 or more disturbed acres at one time, not including offsite areas.

b. Excavation of Sediment and Debris. Remove sediment and debris when accumulation affects the performance of the devices, after a rain, and when directed.

6. Construction Perimeter Fence. Construct, align, and locate fencing as shown on the plans or as directed.

a. Installation of Posts. Embed posts 18 in. deep or adequately anchor in rock, with a spacing of 8 to 10 ft.

b. Wire Attachment. Attach the top wire to the posts at least 3 ft. from the ground. Attach the lower wire midway between the ground and the top wire.

c. Flag Attachment. Attach flagging to both wire strands midway between each post. Use flagging at least 18 in. long. Tie flagging to the wire using a square knot.

7. Sandbags for Erosion Control. Construct a berm or dam of sandbags that will intercept sediment-laden storm water runoff from disturbed areas, create a retention pond, detain

sediment, and release water in sheet flow. Fill each bag with sand so that at least the top 6 in. of the bag is unfilled to allow for proper tying of the open end. Place the sandbags with their tied ends in the same direction. Offset subsequent rows of sandbags 1/2 the length of the preceding row. Place a single layer of sandbags downstream as a secondary debris trap. Place additional sandbags as necessary or as directed for supplementary support to berms or dams of sandbags or earth.

8. Temporary Sediment-Control Fence. Provide temporary sediment-control fence near the downstream perimeter of a disturbed area to intercept sediment from sheet flow. Incorporate the fence into erosion-control measures used to control sediment in areas of higher flow. Install the fence as shown on the plans, as specified in this Section, or as directed.

a. Installation of Posts. Embed posts at least 18 in. deep, or adequately anchor, if in rock, with a spacing of 6 to 8 ft. and install on a slight angle toward the run-off source.

b. Fabric Anchoring. Dig trenches along the uphill side of the fence to anchor 6 to 8 in. of fabric. Provide a minimum trench cross-section of 6 x 6 in. Place the fabric against the side of the trench and align approximately 2 in of fabric along the bottom in the upstream direction. Backfill the trench, then hand-tamp.

c. Fabric and Net Reinforcement Attachment. Unless otherwise shown under the plans, attach the reinforcement to wooden posts with staples, or to steel posts with T-clips, in at least 4 places equally spaced. Sewn vertical pockets may be used to attach reinforcement to end posts. Fasten the fabric to the top strand of reinforcement by hog rings or cord every 15 in. or less.

d. Fabric and Net Splices. Locate splices at a fence post with a minimum lap of 6 in. attached in at least 6 places equally spaced, unless otherwise shown under the plans. Do not locate splices in concentrated flow areas.

Requirements for installation of used temporary sediment-control fence include the following:

- fabric with minimal or no visible signs of biodegradation (weak fibers),
- fabric without excessive patching (more than 1 patch every 15 to 20 ft.),
- posts without bends, and
- backing without holes.

9. Biodegradable Erosion Control Logs. Install biodegradable erosion control logs near the downstream perimeter of a disturbed area to intercept sediment from sheet flow. Incorporate the biodegradable erosion control logs into the erosion measures used to control sediment in areas of higher flow. Install, align and locate the biodegradable erosion control logs as specified below, as shown in plans or as directed.

Secure biodegradable erosion control logs in a method adequate to prevent displacement as a result of normal rain events, prevent damage to the logs, and to the satisfaction of the Engineer such that flow is not allowed under the logs. Temporarily removing and replacing biodegradable erosion logs as to facilitate daily work is allowed at the Contractor's expense.

10. Vertical Tracking. Perform vertical tracking on slopes to temporarily stabilize soil. Provide equipment with a track undercarriage capable of producing a linear soil impression measuring a minimum of 12 inches in length by 2 to 4 inches in width by 1/2 to 2 inches in depth. Do not exceed 12 inches between track impressions. Install continuous linear track impressions where the 12 inch length impressions are perpendicular to the slope.

E. Monitoring and Documentation. Monitor the control measures on a daily basis. Monitoring will consist of, but is not limited to, observing, inspecting, and documenting site locations with control measures and discharge points to provide maintenance and inspection of controls as described in the SWP3. Keep written records of daily monitoring. Document in the daily monitoring report the control measure condition, the date of inspection, required corrective actions, responsible person for making the corrections, and the date corrective actions were completed. Maintain records of all monitoring reports at the project site or at a place approved by the Engineer. Provide copies to the Engineer. Together, the CRPe and an Engineer's representative will complete the Construction Stage Gate Checklist on a periodic basis as determined by the Engineer.

5. Measurement.

A. Rock Filter Dams. Installation or removal of rock filter dams will be measured by the foot or by the cubic yard. The measured volume will include sandbags, when used.

1. Linear Measurement. When rock filter dams are measured by the foot, measurement will be along the centerline of the top of the dam.

2. Volume Measurement. When rock filter dams are measured by the cubic yard, measurement will be based on the volume of rock computed by the method of average end areas.

a. Installation. Measurement will be made in final position.

b. Removal. Measurement will be made at the point of removal.

B. Temporary Pipe Slope Drains. Temporary pipe slope drains will be measured by the foot.

C. Temporary Paved Flumes. Temporary paved flumes will be measured by the square yard of surface area. The measured area will include the energy dissipater at the flume outlet.

D. Construction Exits. Construction exits will be measured by the square yard of surface area.

E. Earthwork for Erosion and Sediment Control.

1. Equipment and Labor Measurement. Equipment and labor used will be measured by the actual number of hours the equipment is operated and the labor is engaged in the work.

2. Volume Measurement.

a. In Place.

(1) Excavation. Excavation will be measured by the cubic yard in its original position and the volume computed by the method of average end areas.

(2) Embankment. Embankment will be measured by the cubic yard in its final position by the method of average end areas. The volume of embankment will be determined between:

- the original ground surfaces or the surface upon that the embankment is to be constructed for the feature and
- the lines, grades and slopes of the accepted embankment for the feature.

b. In Vehicles. Excavation and embankment quantities will be combined and paid for under "Earthwork (Erosion and Sediment Control, In Vehicle)." Excavation will be measured by the cubic yard in vehicles at the point of removal. Embankment will be measured by the cubic yard in vehicles measured at the point of delivery. Shrinkage or swelling factors will not be considered in determining the calculated quantities.

F. Construction Perimeter Fence. Construction perimeter fence will be measured by the foot.

G. Sandbags for Erosion Control. Sandbags will be measured as each sandbag or by the foot along the top of sandbag berms or dams.

H. Temporary Sediment-Control Fence. Installation or removal of temporary sediment-control fence will be measured by the foot.

I. Biodegradable Erosion Control Logs. Installation or removal of biodegradable erosion control logs will be measured by the linear foot along the centerline of the top of the control logs.

J. Vertical Tracking. Vertical tracking will not be measured or paid for directly but is considered subsidiary to this Item.

6. Payment. The following will not be paid for directly but are subsidiary to pertinent Items:

- erosion-control measures for Contractor project-specific locations (PSLs) inside and outside the right of way (such as construction and haul roads, field offices, equipment and supply areas, plants, and material sources);

- removal of litter; unless a separate pay item is shown in the plans.
- repair to devices and features damaged by Contractor operations;
- added measures and maintenance needed due to negligence, carelessness, lack of maintenance, and failure to install permanent controls;
- removal and reinstallation of devices and features needed for the convenience of the Contractor;
- finish grading and dressing upon removal of the device; and
- minor adjustments including but not limited to plumbing posts, reattaching fabric, minor grading to maintain slopes on an erosion embankment feature, or moving small numbers of sandbags.

Stabilization of disturbed areas will be paid for under pertinent Items.

Furnishing and installing pipe for outfalls associated with sediment traps and ponds will not be paid for directly but is subsidiary to the excavation and embankment under this Item.

A. Rock Filter Dams. The work performed and materials furnished in accordance with this Item and measured as provided under "Measurement" will be paid for at the unit price bid as follows:

1. Installation. Installation will be paid for as "Rock Filter Dams (Install)" of the type specified. This price is full compensation for furnishing and operating equipment, finish backfill and grading, lacing, proper disposal, labor, materials, tools, and incidentals.

2. Removal. Removal will be paid for as "Rock Filter Dams (Remove)." This price is full compensation for furnishing and operating equipment, proper disposal, labor, materials, tools, and incidentals.

When the Engineer directs that the rock filter dam installation or portions thereof be replaced, payment will be made at the unit price bid for "Rock Filter Dams (Remove)" and for "Rock Filter Dams (Install)" of the type specified. This price is full compensation for furnishing and operating equipment, finish backfill and grading, lacing, proper disposal, labor, materials, tools, and incidentals.

B. Temporary Pipe Slope Drains. The work performed and materials furnished in accordance with this Item and measured as provided under "Measurement" will be paid for at the unit price bid for "Temporary Pipe Slope Drains" of the size specified. This price is full compensation for furnishing materials, removal and disposal, furnishing and operating equipment, labor, tools, and incidentals.

Removal of temporary pipe slope drains will not be paid for directly but is subsidiary to the installation Item. When the Engineer directs that the pipe slope drain installation or portions thereof be replaced, payment will be made at the unit price bid for "Temporary Pipe Slope Drains" of the size specified, which is full compensation for the removal and reinstallation of the pipe drain.

Earthwork required for the pipe slope drain installation, including construction of the sediment trap, will be measured and paid for under "Earthwork for Erosion and Sediment Control."

Riprap concrete or stone, when used as an energy dissipater or as a stabilized sediment trap, will be measured and paid for in accordance with Item 432, "Riprap."

C. Temporary Paved Flumes. The work performed and materials furnished in accordance with this Item and measured as provided under "Measurement" will be paid for at the unit price bid for "Temporary Paved Flume (Install)" or "Temporary Paved Flume (Remove)." This price is full compensation for furnishing and placing materials, removal and disposal, equipment, labor, tools, and incidentals.

When the Engineer directs that the paved flume installation or portions thereof be replaced, payment will be made at the unit prices bid for "Temporary Paved Flume (Remove)" and "Temporary Paved Flume (Install)." These prices are full compensation for the removal and replacement of the paved flume and for equipment, labor, tools, and incidentals.

Earthwork required for the paved flume installation, including construction of a sediment trap, will be measured and paid for under "Earthwork for Erosion and Sediment Control."

D. Construction Exits. Contractor-required construction exits from off right of way locations or on-right of way PSLs will not be paid for directly but are subsidiary to pertinent Items.

The work performed and materials furnished in accordance with this Item and measured as provided under "Measurement" for construction exits needed on right of way access to work areas required by the Department will be paid for at the unit price bid for "Construction Exits (Install)" of the type specified or "Construction Exits (Remove)." This price is full compensation for furnishing and placing materials, excavating, removal and disposal, cleaning vehicles, labor, tools, and incidentals.

When the Engineer directs that a construction exit or portion thereof be removed and replaced, payment will be made at the unit prices bid for "Construction Exit (Remove)" and "Construction Exit (Install)" of the type specified. These prices are full compensation for the removal and replacement of the construction exit and for equipment, labor, tools, and incidentals.

Construction of sediment traps used in conjunction with the construction exit will be measured and paid for under "Earthwork for Erosion and Sediment Control."

E. Earthwork for Erosion and Sediment Control.

1. Initial Earthwork for Erosion and Sediment Control. The work performed and materials furnished in accordance with this Item and measured as provided under "Measurement" will be paid for at the unit price bid for "Excavation (Erosion and Sediment Control, In Place)", "Embankment (Erosion and Sediment Control, In Place)", "Excavation (Erosion and Sediment Control, In Vehicle)", "Embankment (Erosion and

Sediment Control, In Vehicle)", or "Earthwork (Erosion and Sediment Control, In Vehicle)".

This price is full compensation for excavation and embankment including hauling, disposal of material not used elsewhere on the project; embankments including furnishing material from approved sources and construction of erosion-control features; equipment, labor; tools, and incidentals.

Sprinkling and rolling required by this Item will not be paid for directly, but will be subsidiary to this Item.

2. **Maintenance Earthwork for Erosion and Sediment Control for Cleaning and/or Restoring Control Measures.** The work performed and materials furnished in accordance with this Item and measured as provided under "Measurement" will be paid for by a Contractor Force Account Item.

   This price is full compensation for excavation, embankment, and re-grading including removal of accumulated sediment in various erosion control installations as directed, hauling, and disposal of material not used elsewhere on the project; excavation for construction of erosion-control features; embankments including furnishing material from approved sources and construction of erosion-control features; and equipment, labor; tools, and incidentals.

   Earthwork needed to remove and obliterate of erosion-control features will not be paid for directly but is subsidiary to pertinent Items unless otherwise shown on the plans.

   Sprinkling and rolling required by this Item will not be paid for directly, but will be subsidiary to this Item.

F. Construction Perimeter Fence. The work performed and materials furnished in accordance with this Item and measured as provided under "Measurement" will be paid for at the unit price bid for "Construction Perimeter Fence." This price is full compensation for furnishing and placing the fence; digging, fence posts, wire, and flagging; removal and disposal; and materials, equipment, labor, tools, and incidentals.

Removal of construction perimeter fence will be not be paid for directly but is subsidiary to the installation Item. When the Engineer directs that the perimeter fence installation or portions thereof be removed and replaced, payment will be made at the unit price bid for "Construction Perimeter Fence," which is full compensation for the removal and reinstallation of the construction perimeter fence.

G. Sandbags for Erosion Control. Sandbags will be paid for at the unit price bid for "Sandbags for Erosion Control" (of the height specified when measurement is by the foot). This price is full compensation for materials, placing sandbags, removal and disposal, equipment, labor, tools, and incidentals.

Removal of sandbags will not be paid for directly but is subsidiary to the installation Item. When the Engineer directs that the sandbag installation or portions thereof be replaced,

payment will be made at the unit price bid for "Sandbags for Erosion Control," which is full compensation for the reinstallation of the sandbags.

H. **Temporary Sediment-Control Fence.** The work performed and materials furnished in accordance with this Item and measured as provided under "Measurement" will be paid for at the unit price bid as follows:

1. **Installation.** Installation will be paid for as "Temporary Sediment-Control Fence (Install)." This price is full compensation for furnishing and operating equipment finish backfill and grading, lacing, proper disposal, labor, materials, tools, and incidentals.

2. **Removal.** Removal will be paid for as "Temporary Sediment-Control Fence (Remove)." This price is full compensation for furnishing and operating equipment, proper disposal, labor, materials, tools, and incidentals.

I. Biodegradable Erosion Control Logs. The work performed and materials furnished in accordance with this Item and measured as provided under "Measurement" will be paid for at the unit price bid as follows:

1. **Installation.** Installation will be paid for as "Biodegradable Erosion Control Logs (Install)" of the size specified. This price is full compensation for furnishing and operating equipment finish backfill and grading, staking, proper disposal, labor, materials, tools, and incidentals.

2. **Removal.** Removal will be paid for as "Biodegradable Erosion Control Logs (Remove)." This price is full compensation for furnishing and operating equipment, proper disposal, labor, materials, tools, and incidentals.

J. Vertical Tracking. Vertical tracking will not be measured or paid for directly but is considered subsidiary to this Item.

CONTRACTOR CERTIFICATION OF COMPLIANCE
WITH STORM WATER REQUIREMENTS

I, _____ certify that I am the duly appointed representative of the Contractor with authority to make this Contractor certification. I have read and understand the requirements applicable to this project pertaining to storm water discharge authorization under Texas Pollutant Discharge Elimination System (TPDES) General Permit (GP) TXR150000. The Contractor agrees to comply with the terms of the permit that are expressly stated in the contract documents as being the responsibility of the Contractor. I have read and understand the Storm Water Pollution Prevention Plan (SWP3) developed by the Department for this project. The Contractor agrees it will be implemented prior to construction according to permit requirements and the contract documents. I understand that failure to comply with the terms of the permit that are expressly stated in the contract documents, plans, and specifications as being the responsibility of the Contractor may result in civil penalties.

The Contractor acknowledges its responsibility to satisfy the following requirements:

- Implement the SWP3 for the project in accordance with the plans and specifications and the TPDES GP TXR150000.
- Install and maintain control measures on the project in accordance with the manufacturer's or designer's specifications.
- Collaborate with the Department for joint monitoring of best management practices (BMPs) on a regular basis to verify that BMPs are performing as intended in accordance with the plans and specifications and with TPDES GP TXR150000.
- Collaborate with the Department for joint identification of BMP maintenance needs and carry out such maintenance in accordance with the plans and specifications, TPDES GP TXR150000 and as directed by the Engineer.
- Repair the integrity of any BMP as directed by the Engineer as soon as reasonably possible.
- If appropriate, recommend changes needed in the SWP3 to the Engineer in order to prevent, to the extent practicable, water pollution associated with construction activities from entering any surface water or private property on or adjacent to the project site by storm water discharges.
- Stabilize disturbed areas, as soon as practicable, in accordance with the TPDES GP TXR150000 and as directed by the Engineer.
- If applicable, obtain appropriate authorizations for activities associated with any Project Specific Location under the authority of the Contractor and provide appropriate documentation of compliance to the Engineer.
- Satisfy any other responsibility indicated in the contract documents that are expressly stated as the responsibility of the Contractor.

Signature and Title: _____

Date: _____

SAMPLE

Texas Department of Transportation
Book 2 - Technical Provisions

IH 35E Managed Lanes Project

Attachment 4-2

Form 2118
Construction Storm Water Pollution Prevention Plan Field Inspection and Maintenance Report

CONSTRUCTION STORM WATER POLLUTION PREVENTION PLAN
FIELD INSPECTION AND MAINTENANCE REPORT

Project Information

Inspection Cycle (select only one):

☐ At least once every 7 calendar days.

☐ At least once every 14 calendar days and within 24 hours after 0.5 inches or more of rainfall.

☐ *Other _____

CSJ: _____ Inspection Date: _____

Project: _____ TCEQ Authorization No.: _____

Highway: _____ Date of Last Rainfall: _____

County: _____ Amount of Last Rainfall: _____ (inches)

***For "other" options, the Engineer must verify compliance with Part III.F.7(a) of the TPDES Construction General Permit (CGP).**

Inspected Best Management Practice (BMP)/Areas

All of these BMPs/areas must be inspected when present on the right-of-way

☐ Disturbed areas
☐ Discharge locations
☐ Erosion control BMPs
☐ Sediment control BMPs
☐ Concrete truck washout areas
☐ Areas where litter/debris/trash collect
☐ Areas that generate dust
☐ Postings
☐ Material stockpiles
☐ Areas where vehicles enter/leave site
☐ Portable sanitary facilities
☐ Construction material storage areas
☐ Parking/equipment storage areas
☐ Chemical/fuel storage areas

Other _____

Corrective Actions, Maintenance, Upgrading or Additional Controls

Except the items listed below, all areas/BMPs indicated above have been inspected and do not require maintenance, upgrading or additional controls. If multiple highways or project locations are involved, identify the highway or project location of the BMPs/areas requiring maintenance or improvement. Document all changes to the SWP3.

Station(s) or Location	Left or Right of Centerline	Issue/BMP	Corrective Action	Priority*	Date of Corrective Action Completed
Other/Notes			Cause		
Other/Notes			Cause		
Other/Notes			Cause		
Other/Notes			Cause		
Other/Notes			Cause		

* **High** - must be addressed immediately; all other project work is stopped until issue is resolved.
Med - address as soon as practicable or as directed; other work can continue.
Low - address within 7 days or before the next rainfall event.

Stabilization

When construction activities cease on a disturbed portion of the site for 21 or more days, stabilization must be initiated within 14 days unless excepted by Part III.F.2(b)(iii) of the CGP. Indicate the stabilization measures taken.

Station	Left or Right of Centerline	Stabilization Measure	Date Initiated	Other/Notes
to				
to				
to				
to				
to				

Compliance Certification

Check One and Complete Signature.

☐ With the corrective actions noted (if any), the site is in compliance with the CGP regulations and the SWP3.

☐ The site is in potential non-compliance with the CGP regulations and/or the SWP3. Potential non-compliance issues are described below.

TxDOT's Representative's Name (Print clearly):	Title:	Date:
TxDOT's Representative's Signature:		

Potential Non-Compliance Issues

Potential non-compliance issues may include the failure to address previously noted corrective actions, repeated failure of a control measure, off-site discharges of sediment, off-site discharges of other pollutants, or other potential non-compliance issues identified in the CGP. Notify the Engineer immediately of any potential non-compliance issues.

Station	Left or Right of Centerline	Describe Potential Non-Compliance Issue
to		
to		
to		
to		
to		

Contractor Notification

Furnish a copy of this inspection report to the Contractor within one calendar day of the inspection. Corrective actions must be taken as soon as possible and before the next anticipated rain event, but in no case later than 7 calendar days after being able to access the site. If corrective actions are not made within this timeframe and become potential noncompliance issues, other work on the project may be suspended by the Engineer. Time charges will continue until the project is brought into compliance and documentation of corrective action is provided. This in no way releases the contractor of liability for noncompliance.

Contractor's Representative's Name (Print clearly):	Title:	Date:
Contractor's Representative's Signature:		

Inspection Certification

I certify under penalty of law that this document and all attachments were prepared under my direction or supervision in accordance with a system designed to assure that qualified personnel properly gather and evaluate the information submitted. Based on my inquiry of the person or persons who manage the system, or those persons directly responsible for gathering the information, the information submitted is, to the best of my knowledge and belief, true, accurate, and complete. I am aware there are significant penalties for submitting false information, including the possibility of fine and imprisonment for knowing violations.

TxDOT's Certifying Representative's Name (Print clearly):	Title:	Date:
TxDOT's Certifying Representative's Signature:		

Texas Department of Transportation
Book 2 - Technical Provisions

IH 35E Managed Lanes Project

Attachment 4-3

Form 2448
Construction Stage Gate Checklist (CSGC)

Texas Department of Transportation

Show

Environmental Management System
Construction Stage Gate Checklist (CSGC)

Highway	Project Number	Project CCSJ	County	Area Office

Project Personnel Completing CSGC (Joint Inspection)	
TxDOT Representative	Contractor Representative
Print Name:	Print Name:
Signature/Date:	Signature/Date:

CSGC Inspection Period			
From	Date of beginning initial construction activities, or Date of previous CSGC Inspection	To	Date of this CSGC Inspection

List Project Permits

National Environmental Policy Act (NEPA) Document			
☐ Yes	☐ No		1. Have the project limits or scope changed? (If yes, complete question 2)
☐ Yes	☐ No		2. Has coordination with Advance Planning & Development occurred to ensure NEPA compliance?
Storm Water Resources			
☐ Yes	☐ No		3. Does the project require a Construction Site Notice (CSN)?
☐ Yes	☐ No	☐ N/A	4. Is the CSN posted in a publicly accessible location near where the construction activity is underway?
☐ Yes	☐ No	☐ N/A	5. Does the CSN contain all required information?
☐ Yes	☐ No		6. Does the project require a Notice of Intent (NOI)?
☐ Yes	☐ No	☐ N/A	7. Is the NOI posted in a publicly accessible location near where the construction activity is underway?
☐ Yes	☐ No	☐ N/A	8. Does the NOI contain all required information?
☐ Yes	☐ No	☐ N/A	9. Does the project have a Storm Water Pollution Prevention Plan (SWP3)?
☐ Yes	☐ No	☐ N/A	10. Is there a copy of the TCEQ Construction General Permit onsite or with the SWP3?
☐ Yes	☐ No	☐ N/A	11. Is there a copy of a Delegation of Authority Letter authorizing the signing of inspection reports in the SWP3 file?
☐ Yes	☐ No	☐ N/A	12. Is the SWP3 retained and available for inspection at the work site that generates the storm water? (If no, complete question 13)
			13. Where is it located?
☐ Yes	☐ No	☐ N/A	14. Is the SWP3 updated for any changes in design or project change orders?
☐ Yes	☐ No	☐ N/A	15. Are the SWP3 drawings updated for changes to Best Management Practices (BMPs)? (i.e. type, location and install/remove dates)
☐ Yes	☐ No	☐ N/A	16. Is the description of construction and waste materials stored on-site updated with the Contractor?
☐ Yes	☐ No	☐ N/A	17. Are the dates when major grading activities occur updated?
☐ Yes	☐ No	☐ N/A	18. Are the dates when construction activities temporarily or permanently cease on a portion of the site updated?
☐ Yes	☐ No	☐ N/A	19. Did stabilization occur within 14 days at locations where soil disturbing activities have ceased? (If yes, complete question 20)

Environmental Management System
Construction Stage Gate Checklist (CSGC)

Highway	Project Number	Project CCSJ	County	Area Office

☐ Yes	☐ No	☐ N/A	20. Is the stabilization documented? (i.e. DWR's, methods, seeding rates, etc)
☐ Yes	☐ No	☐ N/A	21. Did stabilization occur within 14 days at locations where work temporarily ceased (at least 21 days)? (If yes, complete question 22)
☐ Yes	☐ No	☐ N/A	22. Is the stabilization documented? (i.e. DWR's, methods, seeding rates, etc)
☐ Yes	☐ No	☐ N/A	25. Are control measures installed in accordance with the SWP3?
☐ Yes	☐ No	☐ N/A	26. Are control measures properly selected?
☐ Yes	☐ No	☐ N/A	27. Are control measures performing?
☐ Yes	☐ No	☐ N/A	28. Are control measures properly maintained?
☐ Yes	☐ No	☐ N/A	29. Are on-site accumulations of sediment removed as soon as practicable to prevent off-site impacts? (i.e. sediment near off-site inlets, etc)
☐ Yes	☐ No	☐ N/A	30. Is sediment removed from control devices when design capacity is reduced by 50%?
☐ Yes	☐ No	☐ N/A	31. Are litter, construction debris, and construction chemicals exposed to wind or water erosion? (i.e. screening outfalls, picked up daily)
☐ Yes	☐ No	☐ N/A	32. Is a lidded dumpster on the project to dispose of litter, construction debris, etc.?
☐ Yes	☐ No	☐ N/A	33. Were velocity dissipation devices (i.e. rock filter dams, holding ponds, etc) placed at discharge locations and along the length of any outfall channel to provide a non-erosive flow velocity from the structure to the water course?
☐ Yes	☐ No	☐ N/A	34. Were the inspections performed per the contract/SWP3?
☐ Yes	☐ No	☐ N/A	35. Are deficiencies and nonconformance issues identified on the inspections being addressed before off-site discharge occurs?
☐ Yes	☐ No	☐ N/A	36. Are controls in place to minimize off-site vehicle tracking of sediments?
☐ Yes	☐ No	☐ N/A	37. Has TxDOT approved PSLs on Right-of-Way?
☐ Yes	☐ No	☐ N/A	38. Are the contractor's on and off Right-of-Way PSLs shown on the SWP3 site plan? (If yes, complete question 39)
☐ Yes	☐ No		39. Are the contractor's on and off Right-of-Way PSLs shown on the SWP3 site plan identified as contractor's PSL?
☐ Yes	☐ No		40. Is the contractor required to have a concrete washout area? (If yes, complete questions 41 - 42)
☐ Yes	☐ No		41. Is the concrete washout area shown on the SWP3 site plan?
☐ Yes	☐ No		42. Is the concrete washout area properly constructed and maintained?
☐ Yes	☐ No		43. Is the inspection cycle option for this project “At least every 14 calendar days and within 24 hours after 0.5 inches or more of rainfall”? (If yes, complete questions 44 - 45)
☐ Yes	☐ No		44. Is there a rain gauge on the project?
☐ Yes	☐ No		45. Are there records documenting rainfall amounts?
☐ Yes	☐ No	☐ N/A	46. Did the inspection summary report include the name of the inspector?
☐ Yes	☐ No	☐ N/A	47. Did the inspection summary report include the date(s) of the inspection?
☐ Yes	☐ No	☐ N/A	48. Did the inspection summary report include measures/area inspected?
☐ Yes	☐ No	☐ N/A	49. Did the inspection summary report include actions needed/taken as a result of the inspection?
☐ Yes	☐ No	☐ N/A	50. Did the inspection summary report include major observations? (i.e. locations of discharges of sediment or pollutants, BMPs that require maintenance, BMPS that failed to operate as designed or proved inadequate, BMPs are needed)
☐ Yes	☐ No	☐ N/A	51. Did the SWP3 include appropriately signed certification statement?
☐ Yes	☐ No	☐ N/A	52. Did the SWP3 include the inspector qualification document?
☐ Yes	☐ No		53. Does the project require a Municipal Separate Storm Sewer System (MS4) permit? (If yes, complete question 54)
☐ Yes	☐ No		54. Have the MS4 operator(s) been notified?

Environmental Management System
Construction Stage Gate Checklist (CSGC)

Highway	Project Number	Project CCSJ	County	Area Office

Jurisdictional Waters of the United States, including Wetlands			
☐ Yes	☐ No		55. Does the project require a USACE permit? (If yes, complete questions 56 - 62)
☐ Yes	☐ No		56. Are wetlands and waters of the US being protected in accordance with the authorization/permit and the PS&E?
☐ Yes	☐ No		57. Are the proper USACE permits maintained at the site?
☐ Yes	☐ No		58. Is clearance of off Right-of-Way PSLs required by a special condition of TxDOT's USACE permit? (If yes, complete question 59)
☐ Yes	☐ No	☐ N/A	59. Has clearance of these PSLs been obtained?
☐ Yes	☐ No		60. Are the BMPs for protecting wetlands and water of the US working effectively?
☐ Yes	☐ No		61. Are construction activities meeting all USACE general permit conditions?
☐ Yes	☐ No		62. Are construction activities meeting all other USACE special permit conditions?
Navigable Waters			
☐ Yes	☐ No		63. Is a US Coast Guard Section 9 permit applicable? (If yes, complete questions 64 - 65)
☐ Yes	☐ No		64. Is the US Coast Guard Section 9 permit maintained on site?
☐ Yes	☐ No		65. Are construction activities meeting US Coast Guard Section 9 permit conditions?
☐ Yes	☐ No		66. Is a USACE Section 10 permit applicable? (If yes, complete questions 67 - 68)
☐ Yes	☐ No		67. Is the USACE Section 10 permit maintained on site?
☐ Yes	☐ No		68. Are construction activities meeting USACE Section 10 permit conditions?
Edwards Aquifer			
☐ Yes	☐ No		69. Does the project require an Edwards Aquifer Protection Plan? (If yes, complete questions 70 - 73)
☐ Yes	☐ No		70. Is a copy of the Water Pollution Abatement Plan (WPAP) kept on-site?
☐ Yes	☐ No		71. Is a copy of the Contributing Zone Plan kept on-site?
☐ Yes	☐ No		72. Are project requirements met for groundwater protection? (i.e. Item 103 Disposal of Wells, staging requirements from WPAP, etc)
☐ Yes	☐ No		73. Are construction activities meeting permit conditions?
International Boundary Water Commission (IBWC)			
☐ Yes	☐ No		74. Is an IBWC License applicable? (If yes, complete questions 75 - 76)
☐ Yes	☐ No		75. Is the IBWC maintained on site?
☐ Yes	☐ No		76. Are construction activities meeting IBWC License conditions?
Biological Resources			
☐ Yes	☐ No	☐ N/A	77. Is work compliant with the plans for protection of vegetation, including trees?
☐ Yes	☐ No	☐ N/A	78. Are migratory bird nesting requirements being followed?
☐ Yes	☐ No	☐ N/A	79. Is the work compliant with the plans and/or mitigation requirements for protection of threatened or endangered species/habitats?
Noise			
☐ Yes	☐ No		80. Are there any proposed noise impacts? (If yes, complete question 81)
☐ Yes	☐ No		81. Is the work being performed in accordance with the noise mitigation plan?
Air Quality			
☐ Yes	☐ No	☐ N/A	82. Are controls being practiced and are they effective for minimizing dust?

Environmental Management System
Construction Stage Gate Checklist (CSGC)

Highway	Project Number	Project CCSJ	County	Area Office

☐ Yes	☐ No	☐ N/A	83. Were the procedures for the Texas Emission Reduction Plan or other incentive measures met and documented? (i.e. contractor is using highest tier level equipment and best fuel grade)
☐ Yes	☐ No	☐ N/A	84. Are measures being taken for reducing idling of equipment and vehicles?
Cultural Resources			
☐ Yes	☐ No	☐ N/A	85. Are known historical and archeological properties being protected and preserved in accordance with the plans?
☐ Yes	☐ No		86. Have historical and archeological properties been encountered during construction? (If yes, complete questions 87 - 88)
☐ Yes	☐ No		87. Were the historical and archeological properties protected?
☐ Yes	☐ No		88. Were the TxDOT Emergency Discovery Guidelines followed?
DSHS Notification			
☐ Yes	☐ No		89. Is DSHS notification(s) required? (if yes, complete questions 90 - 92)
☐ Yes	☐ No		90. Has DSHS notification(s) been mailed?
☐ Yes	☐ No		91. Was the DSHS notification(s) postmarked at least 10 working days prior to initiating demolition or renovation?
☐ Yes	☐ No		92. Were there any amendments to the DSHS notification(s)?
Hazardous Materials			
☐ Yes	☐ No	☐ N/A	93. Are hazardous materials mitigation and abatement procedures being followed?
☐ Yes	☐ No		94. Have unknown hazardous materials been encountered during construction? (If yes, complete questions 95 - 96)
☐ Yes	☐ No		95. Have the proper TxDOT and agency contacts been made and documented?
☐ Yes	☐ No		96. Has mitigation or abatement been addressed?
☐ Yes	☐ No		97. Do the project plans include a soil and/or groundwater management plan? (If yes, complete question 98)
☐ Yes	☐ No		98. Is the abatement/mitigation plan being adhered to?
☐ Yes	☐ No		99. Has a spill of less than reportable quantity occurred? (If yes, complete question 100)
☐ Yes	☐ No		100. Were Spill Response Plan procedures followed for reporting and cleanup?
☐ Yes	☐ No		101. Has a spill of reportable quantity occurred? (If yes, complete question 102)
☐ Yes	☐ No		102. Were Spill Response Plan procedures followed for reporting and cleanup?
Change Orders			
☐ Yes	☐ No		103. Are there change orders on this project? (If yes, complete questions 104 - 106)
☐ Yes	☐ No		104. Are change orders assessed for NEPA re-evaluation and/or resource agency coordination?
☐ Yes	☐ No		105. Do the change orders require environmental mitigation, abatement, or clearance actions? (If yes, complete question 106)
☐ Yes	☐ No		106. Have environmental mitigation, abatement, or clearance actions occurred?

Environmental Management System
Construction Stage Gate Checklist (CSGC)

Highway	Project Number	Project CCSJ	County	Area Office

SUMMARY OF PROJECT INSPECTION

Reference Item Number	Finding	Person Responsible For Corrective Action (Print Name)	Date Corrective Action Expected To Be Completed	Date Corrective Action Completed	TxDOT Representative Verifying Completed Corrective Action
					Print Name: _____ Signature: _____
					Print Name: _____ Signature: _____
					Print Name: _____ Signature: _____
					Print Name: _____ Signature: _____

Comments

Reviewer (Optional)			
Print Name:	Signature:	Title:	Date of Review:

Texas Department of Transportation
Book 2 - Technical Provisions

IH 35E Managed Lanes Project

Attachment 4-4

Section 4(f) Mitigation Master Plan

ATTACHMENT 4-4
IH 35E MANAGED LANES PROJECT MITIGATION ELEMENTS

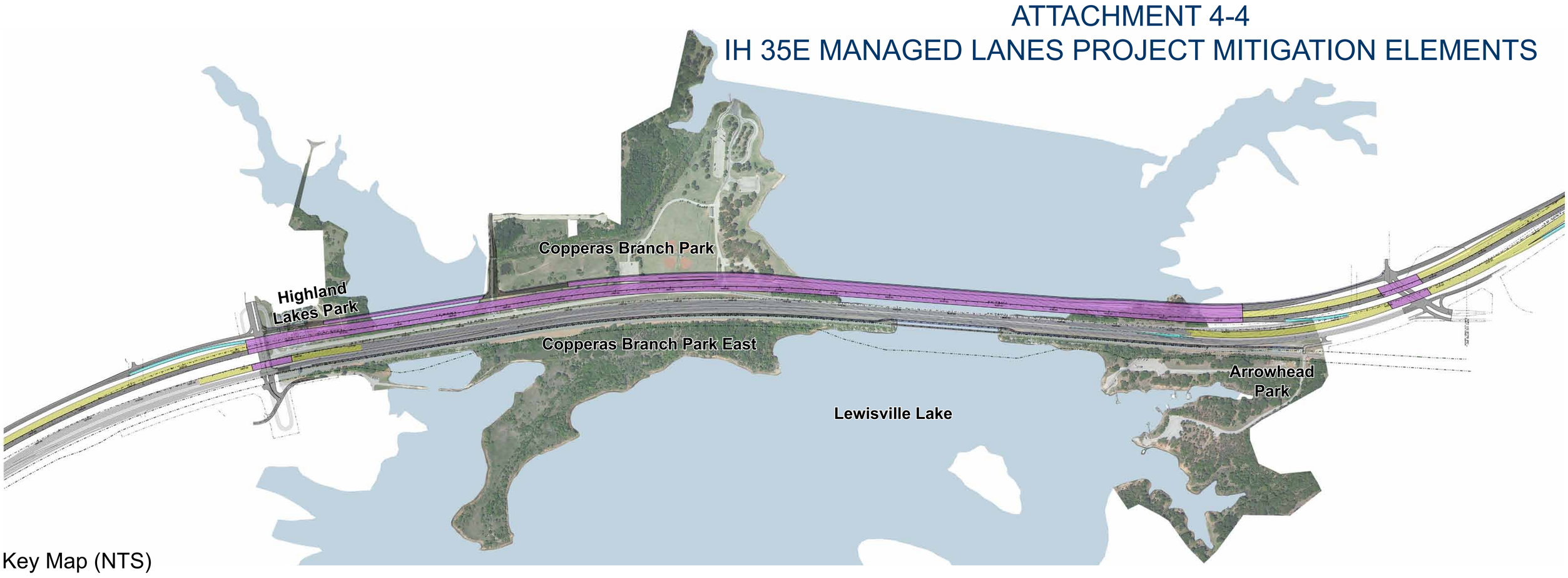

Key Map (NTS)

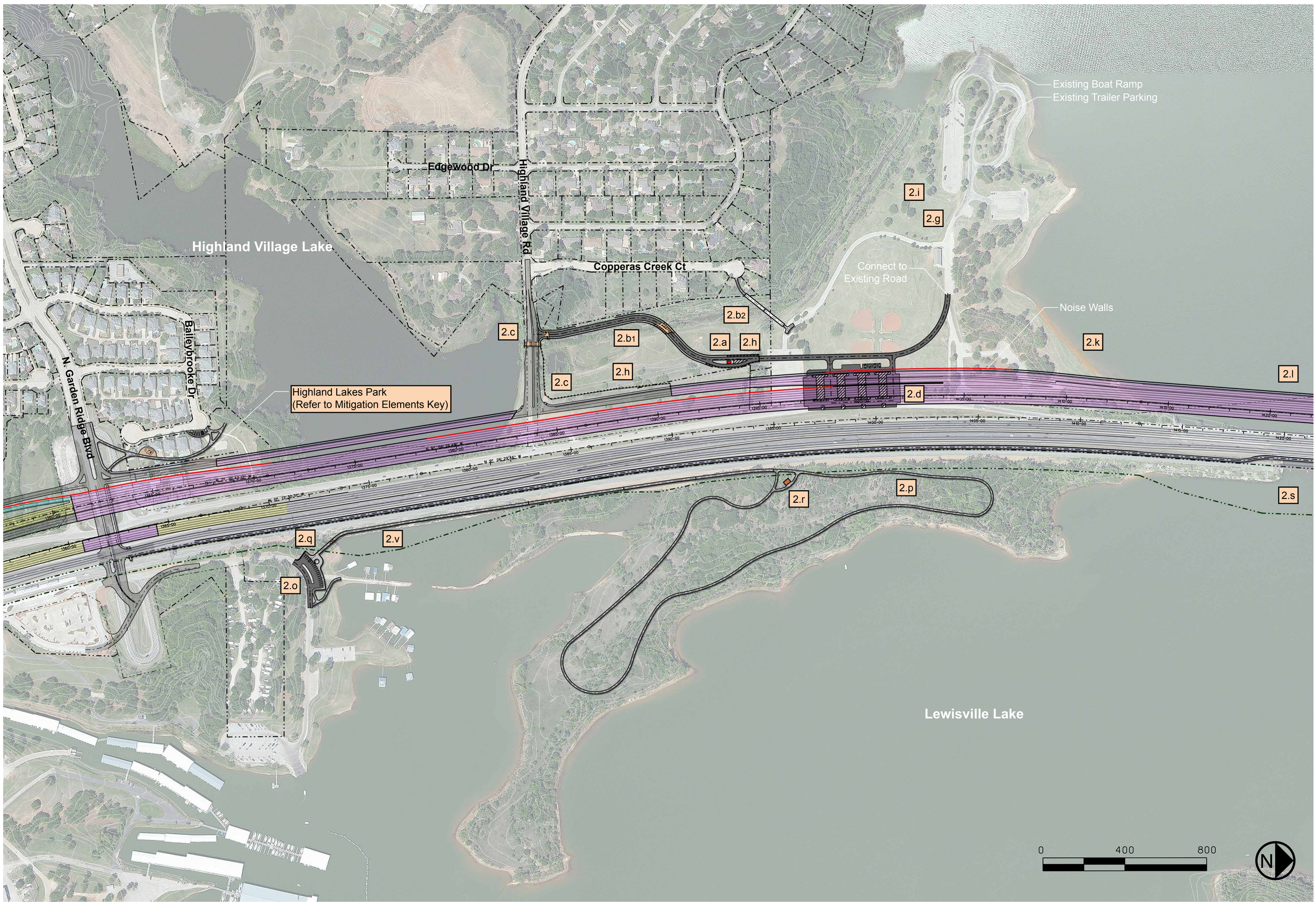

Mitigation Elements Key

Color Key

Design-Build

Copperas Branch Park

2.a Gatehouse
* 2.b1 Highland Village Road and Copperas Branch Park Vehicular Entry/Park Road
* 2.b2 Copperas Park Pedestrian Entry
2.c Signage
2.d Parking
2.g Precast Picnic Tables with Grills
2.h Metal Rail Fencing, Barrier Posts and Gates
2.i Landscaping
2.k Beach
2.l Buoys

Copperas Branch Park East

2.o Parking Access at Trailhead
2.p Copperas Branch Park East Trail
2.q Primary Trailhead
2.r Minimum Sanitary Facilities
2.s Buoys
2.v Connector Trail

Arrowhead Park

Trailhead
Trail Connection

Highland Lakes Park

Picnic Benches
Trash Receptacles
Parking Lot
Light Poles & Fixtures
Drinking Fountain
Park Entry Sign
Concrete Sidewalk & Native Plantings
Visual Screening Wall
Play Structure

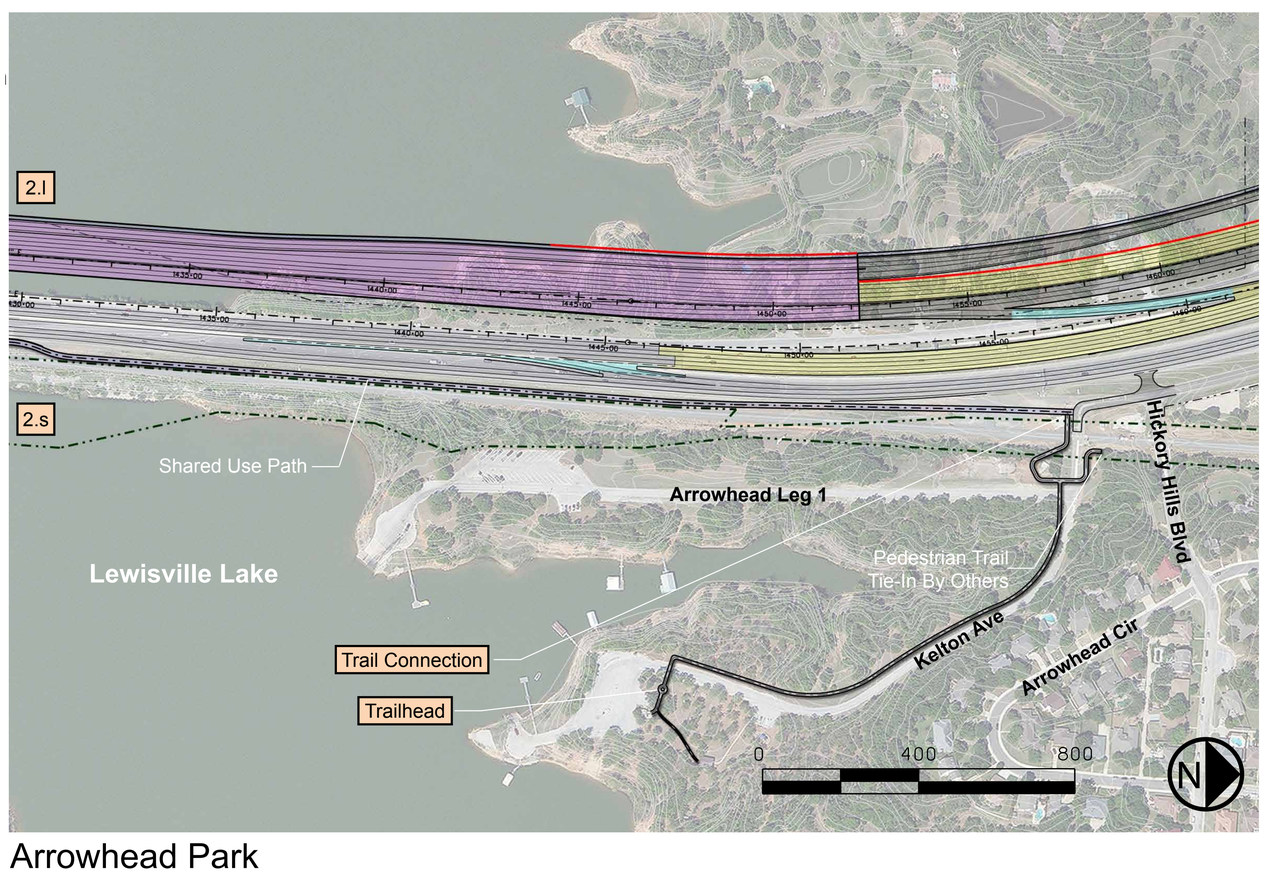

Arrowhead Park

IH-35E Corridor

September 26, 2012 - Version 3

Texas Department of Transportation

HNTB

Attachment 4-4
IH 35E Managed Lanes Project

Mitigation Elements Report

Copperas Branch Park

2.a Gatehouse

A gatehouse shall be provided at the entry to Copperas Branch Park. The structure shall be Americans with Disabilities Act (ADA) compliant and programmed/sized according to the operational needs of the City of Highland Village. A building footprint of 260 square feet (sq ft) is shown on the master plan. The building exterior shall have a limestone veneer in a random ashlar pattern to coordinate with the other stone clad park features. Refer to the master plan document for the approximate location of the gatehouse.

2.b$_1$ Highland Village Road and Copperas Branch Park Vehicular Entry/Park Road

Copperas Branch Park Vehicular Entry

The vehicular entry to Copperas Branch Park is to be located as indicated on the master plan, off of Highland Village Road on the west side of the proposed 300' temporary construction easement. Improvements to Highland Village Road including replacement of the existing culverts with a larger precast arch section and associated end walls is anticipated. The park entry drive shall begin at Highland Village Road and extend approximately 1,200 linear feet (LF), ending just beyond the gatehouse at the main park gate. The park entry initially parallels the existing canal/ditch to avoid the existing pond areas. If designed at grade, a 10 – 12 feet (ft) tall retaining wall along the west side of the drive is anticipated to terrace the existing slope and to transition grades in fill and cut locations along this portion of the park drive. The new entry turns and crosses over the existing canal/ditch that runs parallel to Copperas Creek Court. A drainage structure shall be installed at the canal crossing and shall be designed per the requirements contained in the technical provisions for new drainage structures. Retaining walls should be constructed at the ends of the proposed drainage structure to support both sides of the embankment. The crossing shall accommodate a 24 ft wide concrete drive with curbs. If designed at grade, the retaining walls shall parallel both sides of the drive and continue to the vicinity of the new gatehouse. The retaining wall design is anticipated to be constructed using Mechanically Stabilized Earth (MSE) or big-block retaining wall units with a finish compatible to the other park elements. The retaining wall may also be cast in place concrete with a stone veneer. The tops of the retaining walls are to have a coping and an approved combination traffic rail. Refer to the master plan document for layout.

Park Road

Approximately 1,100 LF of primary park access road shall be constructed within Copperas Branch Park connecting from the gatehouse to the proposed parking lot area under the proposed southbound IH 35E bridge structure and continuing around to the approximate limits of the 300' construction easement. This access road shall be comprised of a 24 ft wide concrete section with curb/gutter per TxDOT standard. An open section without curbs shall be considered, but must include shoulders and barrier fencing acceptable to the City of Highland Village. Refer to the master plan document for layout of these park roads.

Highland Village Road
Highland Village Road shall be improved per the IH 35E interim schematic. Improvements to the road extend from the IH 35E frontage west to the park road entry. An existing culvert under Highland Village Road shall be replaced. The new culvert shall be designed per the requirements contained in the technical provisions for new drainage structures.

2.b$_2$ Copperas Branch Park Pedestrian Entry
The pedestrian entry to the park is indicated off of Copperas Creek Court. The pedestrian entry shall begin at the existing cul-de-sac. The proposed pedestrian bridge is anticipated to be a pre-fabricated truss style with two (2) 120 ft spans, a 14 ft clear width, and concrete deck. The edge treatment is anticipated to be a prefabricated railing system with rub rail and vertical pickets spaced 4 inches apart. Bridge construction includes reinforced concrete abutments, piers, riprap and associated retaining walls where needed. The 240 ft long bridge may be engineered to have fewer, longer spans than the two (2) 120 ft spans anticipated. The final bridge location must be coordinated after confirming field conditions. Refer to the master plan document for approximate location and layout of the pedestrian bridge.

2.c Signage
Two (2) entry signs are to be constructed. The City of Highland Village sign shall be located at the northwest corner of Highland Village Road and the proposed southbound frontage road for IH 35E. The Copperas Branch Park entry sign shall be located at the northeast corner of Highland Village Road and the park entry road. Both shall be double sided cast stone panels supported by a concrete foundation with limestone veneer in a random ashlar pattern. The desired architectural style shall match the City of Highland Village park signage in aesthetics and character. Refer to the master plan document for approximate locations.

2.d Parking
A minimum of one hundred and eighty (180) parking spaces shall be provided under the proposed southbound IH 35E bridge structure. Standard spaces shall be a minimum of 9 ft x 18 ft with 24 ft wide two-directional drives in between bays. The parking facility shall comply with ADA requirements. Oversized spaces for buses, recreational vehicles (RVs) or boat trailers should also be included. The layout of the parking facility is to be coordinated with the bridge column layout of the IH 35E bridge structure. All parking areas shall be concrete section that is adequate to support the anticipated types of vehicular traffic utilizing the parking lot with curb/gutter per Texas Department of Transportation (TxDOT) standards. An open section without curbs shall be considered, but must include shoulders and barrier fencing acceptable to USACE and the City of Highland Village. Refer to the master plan document for generalized layout of the parking area.

2.g Precast Picnic Tables with Grills
Impacts to existing picnic tables and grills are anticipated. Approximately nine (9) precast concrete picnic tables with reinforced concrete pads, two (2) metal awnings and six (6) ground mounted metal grills are anticipated to be replaced. The picnic tables shall be ADA compliant. Refer to the master plan document for approximate location.

2.h Metal Rail Fencing, Barrier Posts and Gates
Approximately 1,300 LF of post and cable barriers shall be provided around the perimeter of the park to prevent vehicular access to the site where it is not desired. Included in this requirement is providing an access gate at the gatehouse and a maintenance access gate near the IH 35E

frontage road. The extent of barriers may be reduced where highway traffic barriers such as metal beam guard fence shall be provided as part of the frontage road construction. Refer to the master plan document for approximate layout.

2.i Landscaping

Every reasonable effort should be made to preserve the existing trees in the park. Impacts to existing trees outside of the 300' temporary easement shall be replaced with native hardwood trees planted and established in accordance with USACE and City of Highland Village requirements. These canopy trees that are replaced must be maintained and warrantied for a period of time in accordance with USACE and the City of Highland Village. If any individual tree expires during this period, it must be replaced immediately and the warranty resets for that tree.

2.k Beach

Impacts to the beach complex shall be restored along the north shore of the park in accordance with United States Army Corps of Engineers (USACE) *Design Guidelines* document Section 6B & 6C for Beach Checklist and Beach Calculations.

2.l Buoys

A buoy system shall be installed and maintained throughout the duration of the developer contract. Buoys shall be placed no more than 300 ft apart along the full extent of the outside east and west edge of the IH 35E bridge structure within Lewisville Lake. The buoy system selected must satisfy USACE and US Coast Guard requirements. The system is expected to include a 12-inch diameter x 53-inch long Ionomer Foam Spar Buoy, white in color, with "SLOW NO WAKE" in black lettering and orange reflective bands and circle. Install buoy with pyramid anchor and chain assembly (or approved equivalent) that allows the top 33-inches of the buoy to float above the water line. Buoy maintenance shall become the responsibility of the owner at the conclusion of the project construction.

<u>Copperas Branch Park East</u>

2.o Parking Access at Trailhead

Parking for twenty (20) spaces shall be provided at the trailhead for access to Copperas Branch Park East. Standard spaces shall be 9 ft x 18 ft with a 24 ft wide two-directional drive. The parking facility shall comply with ADA requirements. All parking areas shall be concrete section that is adequate to support the anticipated types of vehicular traffic utilizing the parking lot with curb/gutter per TxDOT standard. An open section without curbs shall be considered, but must include shoulders and barrier fencing acceptable to the City of Lewisville. Retaining walls are anticipated to address grading and cross slope requirements. The retaining wall heights are variable but are generally 5 ft to 10 ft. Refer to the master plan document for layout of the parking area.

2.p Copperas Branch Park East Trail

Approximately one (1) mile of 10 ft wide, 6 inch thick, concrete trail shall be provided as a loop around Copperas Branch Park East. ADA compliance is required. The trail shall have a 4 ft clear buffer on each side for maintenance and security. Refer to the master plan document for layout.

2.q Primary Trailhead
Near the parking area, there shall be a trailhead to consist of a small concrete plaza, a precast concrete bench and a stone monument sign with the name of the park/trail. A concrete walk from the parking and trailhead to the existing pier area has been indicated. Refer to the master plan document for approximate location.

2.r Minimum Sanitary Facilities
A self-contained, precast concrete restroom facility shall be provided with connecting trails that allow for routine maintenance activities. The restroom shall be a double vault, fully accessible building approximately 175 sq ft with a drinking fountain. ADA compliance is required. Water supply shall be provided to support these elements. Refer to the master plan document for approximate location.

2.s Buoys
See 2.l Buoys.

2.v Connector Trail
A 2,350 LF, 12 ft wide concrete trail shall be provided to connect the primary trailhead to the loop trail at Copperas Branch Park East. This trail shall be installed along the embankment between the Denton County Transportation Authority (DCTA) tracks and Lewisville Lake. The existing DCTA embankment along the waterfront does not appear to provide a "shelf" to accommodate the trail. Construction of elevated structure and/or retaining walls is anticipated for most of the length of the connector trail. The connector trail, including elevated structures, is to be designed and constructed to support emergency and maintenance vehicles in addition to the pedestrian users. ADA compliance is required. Refer to the master plan document for layout.

Highland Lakes Park
Picnic Benches
Four (4) ground mounted picnic benches and tables shall be installed within Highland Lakes Park. Bench and table selection shall be perforated and coated table and bench tops to resist rotting, warping and chipping. The bench layout shall comply with ADA requirements. Refer to the master plan document for approximate location.

Trash Receptacles
Three (3) ground mounted trash receptacles shall be installed within Highland Lakes Park. Refer to the master plan document for approximate location.

Parking Lot
Parking for five (5) spaces shall be provided within Highland Lakes Park. Standard spaces shall be 9 ft x 18 ft. The parking facility shall comply with ADA requirements. All parking areas shall be concrete section that is adequate to support the anticipated types of vehicular traffic utilizing the parking lot with curb/gutter per TxDOT standard. Sidewalks shall be provided to connect parking spaces to the trail system. Refer to the master plan document for layout of the parking area.

Light Poles & Fixtures
Security lighting shall be provided for the parking area and the new play structure. The fixtures shall be full cutoff and the poles shall be sized appropriately for the neighborhood context. Refer to the master plan document for approximate locations.

Drinking Fountain
A drinking fountain shall be installed near the play structure in a location that is fully accessible. The fountain shall be ADA compliant with multilevel bowl heights. Refer to the master plan document for approximate location.

Park Entry Sign
A park entry sign shall be constructed within Highland Lakes Park. The desired architectural style shall be similar to what currently exists and shall be coordinated with the City of Lewisville. Refer to the master plan document for approximate location.

Concrete Sidewalk and Native Plantings
Provide approximately 1,025 LF of 10 ft wide concrete sidewalk to connect the parking area, trails and play structure area. The proposed thickness of the sidewalk shall meet TxDOT sidewalk standards. Native canopy, understory, shrubs, perennials and buffalo grass shall be installed adjacent to the sidewalk as a part of this item. Refer to the master plan document for approximate location.

Visual Screening Wall
A 10 ft tall visual screening wall shall be constructed along the east side of the park property. This wall shall be a precast concrete panel wall supported by concrete foundations and shall include aesthetic textures and color integral to the panel. Refer to the master plan document for approximate location.

Play Structure
A play structure shall be provided from a manufacturer acceptable to the City of Lewisville. Play structure location on the master plan document is approximate and final location shall be coordinated with the City of Lewisville. The structure shall contain a minimum of two (2) elevated play components and five (5) ground level components and shall be accessible by transfer, similar to the Landscape Structures Playbooster Model No. 3498. The play structure shall be manufactured and installed in accordance with applicable safety and ADA standards. An accessible protective surfacing shall be provided within the entire play structure use zone. Locate concrete mow strips and sidewalks at the perimeter of the surfacing for ease of maintenance.

NOTE: Further coordination with the City of Lewisville is required in order to finalize the layout and details of Highland Lakes Park elements before final design can proceed to construction.

Arrowhead Park
Trailhead
Near the parking area, there shall be a trailhead to consist of a small concrete plaza, a precast concrete bench and a stone monument sign with the name of the park/trail. Refer to the master plan document for approximate location.

Trail Connection

Approximately 2,155 LF of concrete trail shall be provided to connect the trailhead to the shared use path on the reconfigured IH 35E northbound bridge and approaches. The proposed thickness of the trail shall meet TxDOT sidewalk standards. The trail connection would begin at the shared use path terminus, extends toward Kelton Avenue and follows Kelton Avenue east across the DCTA tracks to the trailhead location as indicated on the Master Plan document. This trail connection shall be 8 ft wide and transition to a 5 ft wide concrete sidewalk connection from the existing park restroom to the existing pavilion. The trail crossing shall include pedestrian gates at the DCTA tracks. Developer shall coordinate with TxDOT and DCTA for specific rail crossing requirements. A pedestrian crossing at Kelton Avenue and Arrowhead Leg 1 shall be provided. This trail runs west and stops on the east side of the DCTA to provide a tie-in for a future connection by others. Refer to the master plan document for layout.

* The Draft Master Plan and Mitigation Elements Report indicates design intent. Location of all elements is approximate and subject to change based on detailed engineering and final design and approval. All take-offs and quantities are best estimation. Existing site conditions may require design modification and quantity adjustment. Coordination with the U.S. Army Corps of Engineers and the cities of Highland Village and Lewisville, Town of Hickory Creek, and Denton County Transportation Authority, as well as TxDOT and FHWA shall be required in order to confirm and finalize design elements before construction.

Texas Department of Transportation
Book 2 - Technical Provisions

IH 35E Managed Lanes Project

Attachment 4-5

Environmental Permits, Issues, and Commitments (EPIC)

DISCLAIMER:
The use of this standard is governed by the "Texas Engineering Practice Act". No warranty of any kind is made by TxDOT for any purpose whatsoever. TxDOT assumes no responsibility for the conversion of this standard to other formats or for incorrect results or damge resulting from its use.

1. Do not alter Sheet Design or Font style, size or weight - match text attributes.
2. If additional space is needed for a numbered section, fence and adjust sections up or down as needed for proportioning and readability but do not relocate from its relative position.
3. All areas should be addressed thoroughly and verify the necessary pay items are set up to support actions needed.

Revised: October 2012
Prepared by HNTB on 10/08/12

I. STORMWATER POLLUTION PREVENTION PLAN-CLEAN WATER ACT SECTION 402

TPDES TXR 150000: Stormwater Discharge Permit or Construction General Perrmit required for projects with 1 or more acres disturbed soil. Projects with any disturbed soil must protect for erosion and sedimentation in accordance with Item 1122.

☐ No Action Required ☒ Required Action

Action No.	Commitment
1. File NOI with TCEQ for CGP	Developer must stabilize the project site as stated in the SW3P.
2. File NOT with TCEQ	Developer must stabilize the project site as stated in the SW3P.

II. WORK IN OR NEAR STREAMS, WATERBODIES AND WETLANDS CLEAN WATER ACT SECTIONS 401 AND 404

USACE Permit required for filling, dredging, excavating or other work in any water bodies, rivers, creeks, streams, wetlands or wet areas. No equipment is allowed in any sream channel below the ordinary High Water Mark except on approved temporary stream crossings or drill pads.

The Developer must adhere to all of the terms and conditions associated with the following permit(s):

☐ No Permit Required
☒ Nationwide Permit 14 - PCN not Required (less than 1/10th acre waters or wetlands affected)
☒ Nationwide Permit 14 - PCN Required (1/10 to <1/2 acre, 1/3 in tidal waters)
☐ Individual 404 Permit Required
☐ Other Nationwide Permit Required:

Required Actions: List Waters of the US Permit applies to, location in project and check Best Management Practices planned to control erosion, sedimentation and post-project TSS.

REFER TO EPIC SHEET 2 OF 2 - LEFT COLUMN
FOR SECTION II - CONTINUATION
FOR WATERS OF THE U.S DESCRIPTIONS AND APPROXIMATE LOCATION AND ACTIONS

The elevation of the ordinary high water marks of any areas requiring work to be performed in the waters of the US requiring the use of a nationwide permit can be found on the Bridge Layouts.

Best Management Practices for applicable 401 General Conditions:

Erosion	Sedimentation	Post-Construction TSS
☒ Temporary Vegetation	☒ Silt Fence	☐ Vegetative Filter Strips
☐ Blankets/Matting	☒ Rock Berm	☐ Retention/Irrigation Systems
☒ Mulch	☐ Triangular Filter Dike	☐ Extended Detention Basin
☒ Sodding	☐ Sand Bag Berm	☐ Constructed Wetlands
☐ Interceptor Swale	☐ Straw Bale Dike	☐ Wet Basin
☐ Diversion Dike	☐ Brush Berms	☐ Erosion Control Compost
☐ Erosion Control Compost	☐ Erosion Control Compost	☐ Mulch Filter Berm and Socks
☐ Mulch Filter Berm and Socks	☐ Mulch Filter Berm and Socks	☐ Compost Filter Berm and Socks
☐ Compost Filter Berm and Socks	☐ Compost Filter Berm and Socks	☒ Vegetation Lined Ditches
	☐ Stone Outlet Sediment Traps	☐ Sand Filter Systems
	☐ Sediment Basins	

III. CULTURAL RESOURCES

Refer to TxDOT Standard Specifications in the event historical issues or archeological artifacts are found during construction. Upon discovery of archeological artifacts (bones, burnt rock, flint, pottery, etc.) cease work in the immediate area and contact TxDOT immediately.
Developer is responsible for the required actions below.

☒ No Action Required ☐ Required Action

IV. VEGETATION RESOURCES

Preserve native vegetation to the extent practical.

☐ No Action Required ☒ Required Action

Action No.	Location	Commitment
1.	Entire project	Permanent soil erosion features would be constructed as soon as possible during the early stage of construction through proper seeding and/or sodding techniques.
2.	Entire project	Disturbed areas would be restored and stabilized as soon as developers schedule permits. Temporary seeding would be considered where large areas of disturbed ground would be left bare for a considerable length of time. Use only native plants for landscaping and in seeding mixtures where practicable.
3.	Entire project	Trees within the ROW, but not in the construction zone, would not be removed if possible.

V. FEDERAL LISTED, PROPOSED THREATENED, ENDANGERED SPECIES, CRITICAL HABITAT, STATE LISTED SPECIES, CANDIDATE SPECIES AND MIGRATORY BIRDS TREATY ACT.

Developer is responsible for the required actions below.

☐ No Action Required ☒ Required Action

Action No.

1. Prior to any construction activities a qualified biologist shall survey the proposed project corridor for any listed terrestrial species, due to the time period that would elapse between this evaluation and the start of construction activities.

REFER TO EPIC SHEET 2 OF 2 - MIDDLE COLUMN
FOR SECTION V - CONTINUATION
FOR LIST OF SPECIES POTENTIALLY WITHIN PROJECT AREA WITH HABITAT DESCRIPTION AND ADDITIONAL ACTIONS

LIST OF ABBREVIATIONS

BMP: Best Management Practice	SPCC: Spill Prevention Control and Countermeasure
CGP: Construction General Permit	SW3P: Storm Water Pollution Prevention Plan
DSHS: Texas Department of State Health Services	PCN: Pre-Construction Notification
ENV: Environmental Affairs Division	PPCC: Spill Prevention Control and Countermeasure
FEMA: Federal Emergency Management Agency	PSL: Project Specific Location
FHWA: Federal Highway Administration	SPILLS: Spill Listings
MOA: Memorandum of Agreement	TCEQ: Texas Commission on Environmental Quality
MOU: Memorandum of Understanding	TPDES: Texas Pollutant Discharge Elimination System
MS4: Municipal Separate Stormwater Sewer System	TPWD: Texas Parks and Wildlife Department
MBTA: Migratory Bird Treaty Act	TxDOT: Texas Department of Transportation
NOT: Notice of Termination	T&E: Threatened and Endangered Species
NWP: Nationwide Permit	USACE: U.S. Army Corp of Engineers
NOI: Notice of Intent	USFWS: U.S. Fish and Wildlife Service

VI. HAZARDOUS MATERIALS OR CONTAMINATION ISSUES

General (applies to all projects):
Comply with the Hazard Communication Act (the Act) for personnel who will be working with hazardous materials by conducting safety meetings prior to beginning construction and making workers aware of potential hazards in the workplace. Ensure that all workers are provided with personal protective equipment appropiate for any hazardous materials used.

Obtain and keep on-site Material Safety Data Sheets (MSDS) for all hazardous products used on the project, which may include, but are not limited to the following categories: Paints, acids, solvents, asphalt products, chemical additives, fuels and concrete curing compounds or additives. Provide protected storage, off bare ground and covered, for products which may be hazardous. Maintain product labelling as required by the Act. Maintain an adequate supply of on-site spill response materials, as indicated in the MSDS. In the event of a spill, take actions to mitigate the spill as indicated in the MSDS, in accordance with safe work practices, and contact the District Spill Coordinator immediately. The Developer shall be responsible for the proper containment and cleanup of all product spills.
Contact TxDOT if any of the following are detected:

* Dead or distressed vegetation (not identified as normal)
* Trash piles, drums, canisters, barrels, etc.
* Undesirable smells or odors
* Evidence of leaching or seepage of substances

Does the project involve any bridge class structure rehabilitation(s) or replacement(s) (bridge class structures not including box culverts)?
☒ Yes ☐ No

If "No", then no further action is required.
If "Yes", then TxDOT is responsible for completing asbestos assessment/inspection.

Are the results of the asbestos inspection positive (is asbestos present)?
☐ Yes ☒ No

If "Yes", then TxDOT must retain a DSHS licensed asbestos consultant to assist with the notification, develop abatement/mitigation procedures, and perform management activities as necessary. The notification form to DSHS must be postmarked at least 15 working days prior to scheduled demolition.

If "No", then TxDOT is still required to notifiy DSHS 15 working days prior to any scheduled demolition.

In either case, the Developer is responsible for providing the date(s) for abatement activities and/or demolition with careful coordination between TxDOT and asbestos consultant in order to minimize construction delays and subsequent claims.

Any other evidence indicating possible hazardous materials or contamination discovered on site. Hazardous Materials or Contamination Issues Specific to this Project:

☐ No Action Required ☒ Required Action

REFER TO EPIC SHEET 2 OF 2 - RIGHT COLUMN
SECTION VI - CONTINUATION
FOR OTHER HAZARDOUS MATERIALS OR CONTAMINATION ISSUES

VII. OTHER ENVIRONMENTAL ISSUES

(includes regional issues such as Edwards Aquifer District, etc.)

☐ No Action Required ☒ Required Action

Action No.	Location	Commitment
1. Floodplains	Elm Fork Trinity River Floodplain	The project is within the Trinity River Corridor Development Regulatory Zone; therefore, a Corridor Development Certificate would be required.

GENERAL NOTE:

Any change orders and/or deviations from the final design must be reported to TxDOT prior to commencement of construction activities, as additional environmental clearance may be required.

---D R A F T---
This document is released for Informational purposes and is subject to change based on comments from approving agencies and public input. It is not to be used for construction purposes.

© 2012 Texas Department of Transportation
Dallas District Standard

ENVIRONMENTAL PERMITS, ISSUES AND COMMITMENTS (EPIC)

SHEET 1 OF 2

FED.RD. DIV.NO.	FEDERAL AID PROJECT NO.		HIGHWAY NO.
6			IH 35E
STATE	DISTRICT	COUNTY	SOUTH
TEXAS	DALLAS	DALLAS	SHEET NO.
CONTROL	SECTION	JOB	
0196	03	138, 180, 240	

DISCLAIMER:
The use of this standard is governed by the "Texas Engineering Practice Act". No warranty of any kind is made by TxDOT for any purpose whatsoever. TxDOT assumes no responsibility for the conversion of this standard to other formats or for incorrect results or damge resulting from its use.

II. WORK IN OR NEAR STREAMS, WATERBODIES AND WETLANDS CLEAN WATER ACT SECTIONS 401 AND 404 -- (CONTINUATION FROM EPIC SHEET 1 OF 2)

Required Actions: List Waters of the US Permit applies to, location in project and check Best Management Practices planned to control erosion, sedimentation and post-project TSS.

1. Section 404 permits from USACE/Section 401 Water Quality Certification from Texas Commission on Environmental Quality (TCEQ) based on the specific roadway work and linear transportation crossings identified in the permits and associated with the Draft Interim Schematic and Draft Interim Schematic ROW.

2. Table of preliminary jurisdictional features would be provided in Addendum 4 or the RID.

V. FEDERAL LISTED, PROPOSED THREATENED, ENDANGERED SPECIES, CRITICAL HABITAT, STATE LISTED SPECIES, CANDIDATE SPECIES AND MIGRATORY BIRDS TREATY ACT. - (CONTINUATION FROM EPIC SHEET 1 OF 2)

Species Potentially within Project Area w/ Description	Habitat Description
1. Alligator snapping turtle: characterized by a large, heavy head, and a long, thick shell with three dorsal ridges of large scales; are a solid gray, brown, black, or olive-green in color, and often covered with algae; radiating yellow patterns around the eyes.	Perennial water bodies, deep water of rivers, canals, lakes and oxbows; also swamps, bayous, ponds near deep running water; usually in water with mud bottom and abundant aquatic vegetation.
2. Timber/canebrake rattlesnake: black and brown crossbands down the back, broad dark shape present behind the eye, black tail above the rattle up to 25% of the body length.	Swamps, floodplains, upland woodlands, riparian zones, abandoned farmland; prefers dense ground cover, i.e. grapevines or palmetto.
3. Texas garter snake: A small to medium sized terrestrial snake that can grow to about a 39-48 inches long. Their backs are green to black, with a distinctive stripe of red or orange, and either side features yellowish stripes.	Wet or moist microhabitats are conducive to the species occurrence, but the snake is not necessarily restricted to them; hibernates underground or in or under surface cover; breeds March-August.
4. Mussells (Little spectaclecase, Louisiana pigtoe, Texas heelsplitter, and Wabash pigtoe): Adult can range from approximately 1-inch to 12-inches in length. Some species have thin shells and shells vary both on the inside and outside of mussels, depending upon the mussel species. Color, texture, and shape variations in shells are used to help identify different types of mussels.	Small and large rivers especially on sand, mud, rocky mud, and sand and gravel, also silt and cobble bottoms in still to swiftly flowing waters.

If any of the listed terrestrial species are observed, cease work in the immediate area, do not disturb species or habitat and contact the TxDOT immediately. The work may not remove active nests from bridges and other structures during nesting season of the birds associated with the nests. If caves or sinkholes are discovered, cease work in the immediated area, and contact the TxDOT immediately.

Special Note: The Migratory Bird Act of 1918 states that it is unlawful to kill, capture, collect, possess, buy, sell, trade or transport any migratory bird, nest, young, feather or egg in part or in whole, without a federal permit issued in accordance within the Act's policies and regulations. The contractor would remove all old migratory bird nests from any structure where work would be done from October 1 to February 15. In addition, the contractor would be prepared to prevent migratory birds from building nest(s) between February 15 to October 1. In the event that migratory birds are encountered on-site during project construction, efforts to avoid adverse impacts on protected birds, active nests, eggs and/or young would be observed.

VI. HAZARDOUS MATERIALS OR CONTAMINATION ISSUES (CONTINUATION FROM EPIC SHEET 1 OF 2)

Action No.

1. A review of hazardous materials regulatory databases was conducted to determine if any known sites might affect the construction activites based on the interim schematic. See the Limited Phase 1 Environmental Site Assessment Report. Based on this review 8 sites are categorized as high risk, 6 sites are characterized as moderate risk, 38 sites are categorized as low risk. For the high and moderate risk sites Phase II ESAs are recommended prior to the development of the plans and specifications to confirm or deny the potential presence of contamination. The Phase II ESAs should follow the ASTM Designation E1903-11, Standard Practice for Environmental Site Assessments: Phase II ESAs.

2. Developer shall prepare Hazardous Materials Management Plan (HMMP) which will be followed during construction.

GENERAL NOTE:

Any change orders and/or deviations from the final design must be reported to TxDOT prior to commencement of construction activities, as additional environmental clearance may be required.

---D R A F T---
This document is released for informational purposes and is subject to change based on comments from approving agencies and public input. It is not to be used for construction purposes.

© 2012

Texas Department of Transportation
Dallas District Standard

ENVIRONMENTAL PERMITS, ISSUES AND COMMITMENTS (EPIC)

SHEET 2 OF 2

FED.RD. DIV.NO.	FEDERAL AID PROJECT NO.		HIGHWAY NO.
6			IH 35E
STATE	DISTRICT	COUNTY	SOUTH
TEXAS	DALLAS	DALLAS	
CONTROL	SECTION	JOB	SHEET NO.
0196	03	138, 180, 240	

1. *Do not alter Sheet Design or Font style, size or weight - match text attributes.*
2. *If additional space is needed for a numbered section, fence and adjust sections up or down as needed for proportioning and readability but do not relocate from its relative position.*
3. *All areas should be addressed thoroughly and verify the necessary pay items are set up to support actions needed.*

Revised: October 2012
Prepared by HNTB on 10/08/12

DISCLAIMER:
The use of this standard is governed by the "Texas Engineering Practice Act". No warranty of any kind is made by TxDOT for any purpose whatsoever. TxDOT assumes no responsibility for the conversion of this standard to other formats or for incorrect results or damge resulting from its use.

I. STORMWATER POLLUTION PREVENTION PLAN-CLEAN WATER ACT SECTION 402

TPDES TXR 150000: Stormwater Discharge Permit or Construction General Permit required for projects with 1 or more acres disturbed soil. Projects with any disturbed soil must protect for erosion and sedimentation in accordance with Item 1122.

☐ No Action Required ☒ Required Action

Action No.	Commitment
1. File NOI with TCEQ for CGP	Developer must stabilize the project site as stated in the SW3P.
2. File NOT with TCEQ	Developer must stabilize the project site as stated in the SW3P.

II. WORK IN OR NEAR STREAMS, WATERBODIES AND WETLANDS CLEAN WATER ACT SECTIONS 401 AND 404

USACE Permit required for filling, dredging, excavating or other work in any water bodies, rivers, creeks, streams, wetlands or wet areas. No equipment is allowed in any sream channel below the ordinary High Water Mark except on approved temporary stream crossings or drill pads.

The Developer must adhere to all of the terms and conditions associated with the following permit(s):

☐ No Permit Required
☒ Nationwide Permit 14 - PCN not Required (less than 1/10th acre waters or wetlands affected)
☒ Nationwide Permit 14 - PCN Required (1/10 to <1/2 acre, 1/3 in tidal waters)
☐ Individual 404 Permit Required
☐ Other Nationwide Permit Required: NWP# _____

Required Actions: List Waters of the US Permit applies to, location in project and check Best Management Practices planned to control erosion, sedimentation and post-project TSS.

REFER TO EPIC SHEET 2 OF 2 - LEFT COLUMN
FOR SECTION II - CONTINUATION
FOR WATERS OF THE U.S DESCRIPTIONS AND APPROXIMATE LOCATION AND ACTIONS

The elevation of the ordinary high water marks of any areas requiring work to be performed in the waters of the US requiring the use of a nationwide permit can be found on the Bridge Layouts.

Best Management Practices for applicable 401 General Conditions:

Erosion	Sedimentation	Post-Construction TSS
☒ Temporary Vegetation	☒ Silt Fence	☐ Vegetative Filter Strips
☐ Blankets/Matting	☒ Rock Berm	☐ Retention/Irrigation Systems
☒ Mulch	☐ Triangular Filter Dike	☐ Extended Detention Basin
☒ Sodding	☐ Sand Bag Berm	☐ Constructed Wetlands
☐ Interceptor Swale	☐ Straw Bale Dike	☐ Wet Basin
☐ Diversion Dike	☐ Brush Berms	☐ Erosion Control Compost
☐ Erosion Control Compost	☐ Erosion Control Compost	☐ Mulch Filter Berm and Socks
☐ Mulch Filter Berm and Socks	☐ Mulch Filter Berm and Socks	☐ Compost Filter Berm and Socks
☐ Compost Filter Berm and Socks	☐ Compost Filter Berm and Socks	☒ Vegetation Lined Ditches
	☐ Stone Outlet Sediment Traps	☐ Sand Filter Systems
	☐ Sediment Basins	

III. CULTURAL RESOURCES

Refer to TxDOT Standard Specifications in the event historical issues or archeological artifacts are found during construction. Upon discovery of archeological artifacts (bones, burnt rock, flint, pottery, etc.) cease work in the immediate area and contact TxDOT immediately.

☒ No Action Required ☐ Required Action

IV. VEGETATION RESOURCES

Preserve native vegetation to the extent practical.
Developer is responsible for the required actions below.

☐ No Action Required ☒ Required Action

Action No.	Location	Commitment
1.	Entire project	Permanent soil erosion features would be constructed as soon as possible during the early stage of construction through proper seeding and/or sodding techniques.
2.	Entire project	Disturbed areas would be restored and stabilized as soon as contractors schedule permits. Temporary seeding would be considered where large areas of disturbed ground would be left bare for a considerable length of time. Use only native plants for landscaping and in seeding mixtures where practicable.
3.	Entire project	Approximately 18 acres of woody vegetation may be impacted by the proposed project. Of this amount, approximately 0.6 acre, is considered riparian woodlands for which compensatory mitigation is required. Efforts would be made to minimize impacts to trees within the ROW, unusual vegetation features, and special habitat features.
4.	USACE property	On-site mitigation and/or a fee payment to Lewisville Lake Environmental Learning Area (LLELA) or any other Government Entity deemed necessary to satisfy USACE requirements for impacts to natural resources on USACE Property. Coordination with USACE is required for final approval of appropriate mitigation.

V. FEDERAL LISTED, PROPOSED THREATENED, ENDANGERED SPECIES, CRITICAL HABITAT, STATE LISTED SPECIES, CANDIDATE SPECIES AND MIGRATORY BIRDS TREATY ACT.

Developer is responsible for the required actions below.

☐ No Action Required ☒ Required Action

Action No.

1. Prior to any construction activities a qualified biologist shall survey the proposed project corridor for any listed terrestrial species, due to the time period that would elapse between this evaluation and the start of construction activities.

*TPWD records indicate that the Texas garter snake has been found within the corporate limits of the Town of Hickory Creek on the west side of IH 35E.Care should be taken and brief pre-construction presence/absence survey for the Texas garter snake shall be conducted prior to construction clearing.

REFER TO EPIC SHEET 2 OF 2 - MIDDLE COLUMN
FOR SECTION V - CONTINUATION
FOR LIST OF SPECIES POTENTIALLY WITHIN PROJECT AREA WITH HABITAT DESCRIPTION AND ADDITIONAL ACTIONS

LIST OF ABBREVIATIONS

BMP: Best Management Practice
CGP: Construction General Permit
DSHS: Texas Department of State Health Services
ENV: Environmental Affairs Division
FEMA: Federal Emergency Management Agency
FHWA: Federal Highway Administration
LLELA: Lewisville Lake Environmental Learning Area
MOA: Memorandum of Agreement
MOU: Memorandum of Understanding
MS4: Municipal Separate Stormwater Sewer System
MBTA: Migratory Bird Treaty Act
NOT: Notice of Termination
NWP: Nationwide Permit
NOI: Notice of Intent
SPCC: Spill Prevention Control and Countermeasure
SW3P: Storm Water Pollution Prevention Plan
PCN: Pre-Construction Notification
PPCC: Spill Prevention Control and Countermeasure
PSL: Project Specific Location
SPILLS: Spill Listings
TCEQ: Texas Commission on Environmental Quality
TPDES: Texas Pollutant Discharge Elimination System
TPWD: Texas Parks and Wildlife Department
TxDOT: Texas Department of Transportation
T&E: Threatened and Endangered Species
USACE: U.S. Army Corp of Engineers
USFWS: U.S. Fish and Wildlife Service

VI. HAZARDOUS MATERIALS OR CONTAMINATION ISSUES

General (applies to all projects):
Comply with the Hazard Communication Act (the Act) for personnel who will be working with hazardous materials by conducting safety meetings prior to beginning construction and making workers aware of potential hazards in the workplace. Ensure that all workers are provided with personal protective equipment appropiate for any hazardous materials used.

Obtain and keep on-site Material Safety Data Sheets (MSDS) for all hazardous products used on the project, which may include, but are not limited to the following categories: Paints, acids, solvents, asphalt products, chemical additives, fuels and concrete curing compounds or additives. Provide protected storage, off bare ground and covered, for products which may be hazardous. Maintain product labelling as required by the Act. Maintain an adequate supply of on-site spill response materials, as indicated in the MSDS. In the event of a spill, take actions to mitigate the spill as indicated in the MSDS, in accordance with safe work practices, and contact the District Spill Coordinator immediately. The Developer shall be responsible for the proper containment and cleanup of all product spills.
Contact TxDOT if any of the following are detected:

* Dead or distressed vegetation (not identified as normal)
* Trash piles, drums, canisters, barrels, etc.
* Undesirable smells or odors
* Evidence of leaching or seepage of substances

Does the project involve any bridge class structure rehabilitation(s) or replacement(s) (bridge class structures not including box culverts)?
☒ Yes ☐ No

If "No", then no further action is required.
If "Yes", then TxDOT is responsible for completing asbestos assessment/inspection.

Are the results of the asbestos inspection positive (is asbestos present)?
☐ Yes ☒ No

If "Yes", then TxDOT must retain a DSHS licensed asbestos consultant to assist with the notification, develop abatement/mitigation procedures, and perform management activities as necessary. The notification form to DSHS must be postmarked at least 15 working days prior to scheduled demolition.

If "No", then TxDOT is still required to notifiy DSHS 15 working days prior to any scheduled demolition.

In either case, the Developer is responsible for providing the date(s) for abatement activities and/or demolition with careful coordination between TxDOT and the asbestos consultant in order to minimize construction delays and subsequent claims.

Any other evidence indicating possible hazardous materials or contamination discovered on site. Hazardous Materials or Contamination Issues Specific to this Project:

☐ No Action Required ☒ Required Action

Action No.

1. A review of hazardous materials regulatory databases was conducted to determine if any known sites might affect the construction activites based on the interim schematic. See the Limited Phase 1 Environmental Site Assessment Report.
2. Based on this review 7 sites are categorized as high risk, 7 sites are characterized as moderate risk, 22 sites are categorized as low risk. For the high and moderate risk sites Phase II ESAs are recommended prior to the development of the plans and specifications to confirm or deny the potential presence of contamination. The Phase II ESAs should follow the ASTM Designation E1903-11, Standard Practice for Environmental Site Assessments: Phase II ESAs.
3. Developer shall prepare Hazardous Materials Management Plan (HMMP) which will be followed during construction.

VII. OTHER ENVIRONMENTAL ISSUES

(includes regional issues such as Edwards Aquifer District, etc.)

REFER TO EPIC SHEET 2 OF 2 - RIGHT COLUMN
SECTION VII - CONTINUATION
FOR OTHER ENVIRONMENTAL ISSUES

GENERAL NOTE:

Any change orders and/or deviations from the final design must be reported to TxDOT prior to commencement of construction activities, as additional environmental clearance may be required.

---D R A F T---
This document is released for Informational purposes and is subject to change based on comments from approving agencies and public input. It is not to be used for construction purposes.

© 2012 Texas Department of Transportation
Dallas District Standard

ENVIRONMENTAL PERMITS, ISSUES AND COMMITMENTS (EPIC)

FED.RD. DIV.NO.	FEDERAL AID PROJECT NO.		HIGHWAY NO.
6			IH 35E MIDDLE
STATE	DISTRICT	COUNTY	
TEXAS	DALLAS	DALLAS	
CONTROL	SECTION	JOB	SHEET NO.
0196	03	068, 073, 096, 114, 245	

1. *Do not alter Sheet Design or Font style, size or weight - match text attributes.*
2. *If additional space is needed for a numbered section, fence and adjust sections up or down as needed for proportioning and readability but do not relocate from its relative position.*
3. *All areas should be addressed thoroughly and verify the necessary pay items are set up to support actions needed.*

Revised: October 2012
Prepared by HNTB on 10/30/12

DISCLAIMER:
The use of this standard is governed by the "Texas Engineering Practice Act". No warranty of any kind is made by TxDOT for any purpose whatsoever. TxDOT assumes no responsibility for the conversion of this standard to other formats or for incorrect results or damge resulting from its use.

II. WORK IN OR NEAR STREAMS, WATERBODIES AND WETLANDS CLEAN WATER ACT SECTIONS 401 AND 404 -- (CONTINUATION FROM EPIC SHEET 1 OF 2)

Required Actions: List Waters of the US Permit applies to, location in project and check Best Management Practices planned to control erosion, sedimentation and post-project TSS.

1. Section 404 permits from USACE/Section 401 Water Quality Certification from Texas Commission on Environmental Quality (TCEQ) based on the specific roadway work and linear transportation crossings identified in the permits and associated with the Draft Interim Schematic and Draft Interim Schematic ROW.

2. Table of preliminary jurisdictional features would be provided in Addendum 4 or the RID.

V. FEDERAL LISTED, PROPOSED THREATENED, ENDANGERED SPECIES, CRITICAL HABITAT, STATE LISTED SPECIES, CANDIDATE SPECIES AND MIGRATORY BIRDS TREATY ACT. - (CONTINUATION FROM EPIC SHEET 1 OF 2)

Species Potentially within Project Area w/ Description	Habitat Description
1. Timber/canebrake rattlesnake: black and brown crossbands down the back, broad dark shape present behind the eye, black tail above the rattle up to 25% of the body length.	Swamps, floodplains, upland woodlands, riparian zones, abandoned farmland; prefers dense ground cover, i.e. grapevines or palmetto.
2. Alligator snapping turtle: characterized by a large, heavy head, and a long, thick shell with three dorsal ridges of large scales; are a solid gray, brown, black, or olive-green in color, and often covered with algae; radiating yellow patterns around the eyes.	Perennial water bodies, deep water of rivers, canals, lakes and oxbows; also swamps, bayous, ponds near deep running water; usually in water with mud bottom and abundant aquatic vegetation.
3. White-faced ibis: A dark, chestnut colored-bird with green or purple on its head and upper parts, and a long, down-curved bill. It has reddish legs and feet and red bare skin on the face around the eyes.	Prefers freshwater marshes, sloughs, and irrigated rice fields, but will attend brackish and saltwater habitats; nests in marshes, in low trees, on the ground in bulrushes or reeds, or on floating mats.
4. Mussells (Fownsfoot, Little spectaclecase, Louisiana pigtoe, Pistolgrip, Rock pocketbook, Sandbank pocketbook, Texas heelsplitter, and Wabash pigtoe): Adult can range from approximately 1-inch to 12-inches in length. Some species have thin shells and shells vary both on the inside and outside of mussels, depending upon the mussel species. Color, texture, and shape variations in shells are used to help identify different types of mussels.	Small and large rivers especially on sand, mud, rocky mud, and sand and gravel, also silt and cobble bottoms in still to swiftly flowing waters.
5. Texas garter snake*: A small to medium sized terrestrial snake that can grow to about a 39-48 inches long. Their backs are green to black, with a distinctive stripe of red or orange, and either side features yellowish stripes.	Wet or moist microhabitats are conducive to the species occurrence, but the snake is not necessarily restricted to them; hibernates underground or in or under surface cover; breeds March-August.
6. Plains spotted skunk: Small slender body with fine black body fur, a white triangular patch on the forehead, four to six broken white stripes extending from the neck along the back and sides, and solid black tail.	Catholic; open fields, prairies, croplands, fence rows, farmyards, forest edges, and woodlands; prefers wooded, brushy areas and tallgrass prairie.

If any of the listed terrestrial species are observed, cease work in the immediate area, do not disturb species or habitat and contact TxDOT immediately. The work may not remove active nests from bridges and other structures during nesting season of the birds associated with the nests. If caves or sinkholes are discovered, cease work in the immediated area, and contact the TxDOT immediately.

Special Note: The Migratory Bird Act of 1918 states that it is unlawful to kill, capture, collect, possess, buy, sell, trade or transport any migratory bird, nest, young, feather or egg in part or in whole, without a federal permit issued in accordance within the Act's policies and regulations. The contractor would remove all old migratory bird nests from any structure where work would be done from October 1 to February 15. In addition, the contractor would be prepared to prevent migratory birds from building nest(s) between February 15 to October 1. In the event that migratory birds are encountered on-site during project construction, efforts to avoid adverse impacts on protected birds, active nests, eggs and/or young would be observed.

VII. OTHER ENVIRONMENTAL ISSUES - (CONTINUATION FROM EPIC SHEET 1 OF 2)

☐ No Action Required ☒ Required Action

Action No.	Location	Commitment
1. Section 4(f)	USACE property including Copperas Branch Park, Copperas Branch Park East, Arrowhead Park, and Highland Lakes Park	Impacted amenities at Copperas Branch Park would be replaced as described in Book 2, Attachment 4-4. Since the Section 4(f) was approved, additional mitigation for loss of park revenue and amenities in the form of an in-lieu fee payment has been agreed to and will be the responsibility of TxDOT. The Developer shall be responsible for any modifications or additional requirements related to in-lieu fee payments above and beyond this agreement.

2. Traffic Noise Mitigation

Noise Barrier 2A	Sta. 1158+19 To Sta. 1159+27 (Right of C/L)	Construct traffic noise barriers 2A and 2B with a 150 ft offset to the right of the centerline. Barrier heights would be 10 ft.
Noise Barrier 2B	Sta. 1160+08 To Sta. 1169+59 (Right of C/L)	
Noise Barrier 5A	Sta. 1348+50 To Sta. 1354+80 (Left of C/L)	Construct traffic noise barriers 5A with a 107 ft offset to the left of the centerline. Barrier heights would be 14 ft.
Noise Barrier 5B	Sta. 1353+76 To Sta. 1357+69 (Left of C/L)	Construct traffic noise barriers 5B with a 189 ft offset to the left of the centerline. Barrier heights would be 10 ft.
Noise Barrier 5C	Sta. 1357+10 To Sta. 1372+95 (Left of C/L)	Construct traffic noise barriers 5C with a 82 ft to 145 ft offset to the left of the centerline. Barrier heights would be 10 ft.
Noise Barrier 5D	Sta. 1380+66 To Sta. 1400+60 (Left of C/L)	Construct traffic noise barriers 5D with a 79 ft offset to the left of the centerline. Barrier heights would be 12 ft.
Noise Barrier 5E	Sta. 1400+32 To Sta. 1409+33 (Left of C/L)	Construct traffic noise barriers 5E with a 148 ft to 152 ft offset to the left of the centerline. Barrier heights would be 12 ft.
Noise Barrier 6A	Sta. 1446+13 To Sta. 1454+19 (Left of C/L)	Construct traffic noise barriers 6A with a 148 ft to 152 ft offset to the left of the centerline. Barrier heights would be 12 ft. Construct traffic noise barriers 6B with a 79 ft offset to the left of the centerline. Barrier heights would be 12 ft.
Noise Barrier 6B	Sta. 1454+19 To Sta. 1473+80 (Left of C/L)	

Special Note
Measures to control fugitive dust would be considered and incoporated into the final design and construction specifications.

See Book 2 (4.3.2) for additional requirements.

GENERAL NOTE:

Any change orders and/or deviations from the final design must be reported to TxDOT prior to commencement of construction activities, as additional environmental clearance may be required.

---D R A F T---
This document is released for informational purposes and is subject to change based on comments from approving agencies and public input. It is not to be used for construction purposes.

© 2012 Texas Department of Transportation
Dallas District Standard

ENVIRONMENTAL PERMITS, ISSUES AND COMMITMENTS (EPIC)

SHEET 2 OF 2

FED.RD. DIV.NO.	FEDERAL AID PROJECT NO.		HIGHWAY NO.
6			IH 35E MIDDLE
STATE	DISTRICT	COUNTY	
TEXAS	DALLAS	DALLAS	
CONTROL	SECTION	JOB	SHEET NO.
0196	03	068, 073, 096, 114, 245	

1. *Do not alter Sheet Design or Font style, size or weight - match text attributes.*
2. *If additional space is needed for a numbered section, fence and adjust sections up or down as needed for proportioning and readability but do not relocate from its relative position.*
3. *All areas should be addressed thoroughly and verify the necessary pay items are set up to support actions needed.*

Revised: October 2012
Prepared by HNTB on 10/30/12

DISCLAIMER:
The use of this standard is governed by the "Texas Engineering Practice Act". No warranty of any kind is made by TxDOT for any purpose whatsoever. TxDOT assumes no responsibility for the conversion of this standard to other formats or for incorrect results or damge resulting from its use.

1. Do not alter Sheet Design or Font style, size or weight - match text attributes.
2. If additional space is needed for a numbered section, fence and adjust sections up or down as needed for proportioning and readability but do not relocate from its relative position.
3. All areas should be addressed thoroughly and verify the necessary pay items are set up to support actions needed.

Revised: October 2012
Prepared by HNTB on 10/24/12

I. STORMWATER POLLUTION PREVENTION PLAN-CLEAN WATER ACT SECTION 402

TPDES TXR 150000: Stormwater Discharge Permit or Construction General Perrmit required for projects with 1 or more acres disturbed soil. Projects with any disturbed soil must protect for erosion and sedimentation in accordance with Item 1122.

☐ No Action Required ☒ Required Action

Action No.	Commitment
1. File NOI with TCEQ for CGP	Developer must stabilize the project site as stated in the SW3P.
2. File NOT with TCEQ	Developer must stabilize the project site as stated in the SW3P.

II. WORK IN OR NEAR STREAMS, WATERBODIES AND WETLANDS CLEAN WATER ACT SECTIONS 401 AND 404

USACE Permit required for filling, dredging, excavating or other work in any water bodies, rivers, creeks, streams, wetlands or wet areas. No equipment is allowed in any sream channel below the ordinary High Water Mark except on approved temporary stream crossings or drill pads.

The Developer must adhere to all of the terms and conditions associated with the following permit(s):

☐ No Permit Required
☒ Nationwide Permit 14 - PCN not Required (less than 1/10th acre waters or wetlands affected)
☐ Nationwide Permit 14 - PCN Required (1/10 to <1/2 acre, 1/3 in tidal waters)
☐ Individual 404 Permit Required
☐ Other Nationwide Permit Required:

Required Actions: List Waters of the US Permit applies to, location in project and check Best Management Practices planned to control erosion, sedimentation and post-project TSS.

REFER TO EPIC SHEET 2 OF 2 - LEFT COLUMN
FOR SECTION II - CONTINUATION
FOR WATERS OF THE U.S DESCRIPTIONS AND APPROXIMATE LOCATION AND ACTIONS

The elevation of the ordinary high water marks of any areas requiring work to be performed in the waters of the US requiring the use of a nationwide permit can be found on the Bridge Layouts.

Best Management Practices for applicable 401 General Conditions:

Erosion	Sedimentation	Post-Construction TSS
☒ Temporary Vegetation	☒ Silt Fence	☐ Vegetative Filter Strips
☐ Blankets/Matting	☒ Rock Berm	☐ Retention/Irrigation Systems
☒ Mulch	☐ Triangular Filter Dike	☐ Extended Detention Basin
☐ Sodding	☐ Sand Bag Berm	☐ Constructed Wetlands
☐ Interceptor Swale	☐ Straw Bale Dike	☐ Wet Basin
☐ Diversion Dike	☐ Brush Berms	☐ Erosion Control Compost
☐ Erosion Control Compost	☐ Erosion Control Compost	☐ Mulch Filter Berm and Socks
☐ Mulch Filter Berm and Socks	☐ Mulch Filter Berm and Socks	☐ Compost Filter Berm and Socks
☐ Compost Filter Berm and Socks	☐ Compost Filter Berm and Socks	☒ Vegetation Lined Ditches
	☐ Stone Outlet Sediment Traps	☐ Sand Filter Systems
	☐ Sediment Basins	

III. CULTURAL RESOURCES

Refer to TxDOT Standard Specifications in the event historical issues or archeological artifacts are found during construction. Upon discovery of archeological artifacts (bones, burnt rock, flint, pottery, etc.) cease work in the immediate area and contact TxDOT immediately.

☒ No Action Required ☐ Required Action

IV. VEGETATION RESOURCES

Preserve native vegetation to the extent practical.
Developer is responsible for the required actions below.

☐ No Action Required ☒ Required Action

Action No.	Commitment
1.	Permanent erosion features would be constructed as soon as feasible during the early stage of construction through proper sodding and/or seeding techniques.
2.	Disturbed areas would be restored and stabilized as soon as the construction schedule permits. Temporary sodding would be considered where large areas of disturbed ground would be left bare for a considerable length of time. Use only native plants for landscaping and in seeding mixtures where practicable.
3.	Approximately 1.2 acres of upland woody vegetation, associated with residences, would be impacted. Compensatory mitigation is not proposed for the impacts to these areas. Efforts would be made to minimize impacts to trees within the ROW, unusual vegetation features, and special habitat features.

V. FEDERAL LISTED, PROPOSED THREATENED, ENDANGERED SPECIES, CRITICAL HABITAT, STATE LISTED SPECIES, CANDIDATE SPECIES AND MIGRATORY BIRDS TREATY ACT.

Developer is responsible for the required actions below.

☐ No Action Required ☒ Required Action

Action No.

1. Prior to any construction activities a qualified biologist shall survey the proposed project corridor for any listed terrestrial species, due to the time period that would elapse between this evaluation and the start of construction activities.

REFER TO EPIC SHEET 2 OF 2 - MIDDLE COLUMN
FOR SECTION V - CONTINUATION
FOR LIST OF SPECIES POTENTIALLY WITHIN PROJECT AREA WITH HABITAT DESCRIPTION AND ADDITIONAL ACTIONS

LIST OF ABBREVIATIONS

BMP: Best Management Practice
CGP: Construction General Permit
DSHS: Texas Department of State Health Services
ENV: Environmental Affairs Division
FEMA: Federal Emergency Management Agency
FHWA: Federal Highway Administration
MOA: Memorandum of Agreement
MOU: Memorandum of Understanding
MS4: Municipal Separate Stormwater Sewer System
MBTA: Migratory Bird Treaty Act
NOT: Notice of Termination
NWP: Nationwide Permit
NOI: Notice of Intent
SPCC: Spill Prevention Control and Countermeasure
SW3P: Storm Water Pollution Prevention Plan
PCN: Pre-Construction Notification
PPCC: Spill Prevention Control and Countermeasure
PSL: Project Specific Location
SPILLS: Spill Listings
TCEQ: Texas Commission on Environmental Quality
TPDES: Texas Pollutant Discharge Elimination System
TPWD: Texas Parks and Wildlife Department
TxDOT: Texas Department of Transportation
T&E: Threatened and Endangered Species
USACE: U.S. Army Corp of Engineers
USFWS: U.S. Fish and Wildlife Service

VI. HAZARDOUS MATERIALS OR CONTAMINATION ISSUES

General (applies to all projects):
Comply with the Hazard Communication Act (the Act) for personnel who will be working with hazardous materials by conducting safety meetings prior to beginning construction and making workers aware of potential hazards in the workplace. Ensure that all workers are provided with personal protective equipment appropiate for any hazardous materials used.

Obtain and keep on-site Material Safety Data Sheets (MSDS) for all hazardous products used on the project, which may include, but are not limited to the following categories: Paints, acids, solvents, asphalt products, chemical additives, fuels and concrete curing compounds or additives. Provide protected storage, off bare ground and covered, for products which may be hazardous. Maintain product labelling as required by the Act. Maintain an adequate supply of on-site spill response materials, as indicated in the MSDS. In the event of a spill, take actions to mitigate the spill as indicated in the MSDS, in accordance with safe work practices, and contact the District Spill Coordinator immediately. The Developer shall be responsible for the proper containment and cleanup of all product spills.
Contact TxDOT if any of the following are detected:

* Dead or distressed vegetation (not identified as normal)
* Trash piles, drums, canisters, barrels, etc.
* Undesirable smells or odors
* Evidence of leaching or seepage of substances

Does the project involve any bridge class structure rehabilitation(s) or replacement(s) (bridge class structures not including box culverts)?
☒ Yes ☐ No

If "No", then no further action is required.
If "Yes", then TxDOT is responsible for completing asbestos assessment/inspection.

Are the results of the asbestos inspection positive (is asbestos present)?
☐ Yes ☒ No

If "Yes", then TxDOT must retain a DSHS licensed asbestos consultant to assist with the notification, develop abatement/mitigation procedures, and perform management activities as necessary. The notification form to DSHS must be postmarked at least 15 working days prior to scheduled demolition.

If "No", then TxDOT is still required to notifiy DSHS 15 working days prior to any scheduled demolition.

In either case, the Developer is responsible for providing the date(s) for abatement activities and/or demolition with careful coordination between TxDOT and asbestos consultant in order to minimize construction delays and subsequent claims.

Any other evidence indicating possible hazardous materials or contamination discovered on site. Hazardous Materials or Contamination Issues Specific to this Project:

☐ No Action Required ☒ Required Action

REFER TO EPIC SHEET 2 OF 2 - RIGHT COLUMN
SECTION VI - CONTINUATION
FOR OTHER HAZARDOUS MATERIALS OR CONTAMINATION ISSUES

VII. OTHER ENVIRONMENTAL ISSUES

(includes regional issues such as Edwards Aquifer District, etc.)

☐ No Action Required ☒ Required Action

Action No.	Location	Commitment
1. Noise Barrier NW5	Sta. 1995+66 To Sta. 2004+74 (Right of C/L)	Construct traffic noise barriers NW5 with a 146 ft to 147 ft offset to the right of the centerline. Barrier heights would be 12 ft.

Special Note
Measures to control fugitive dust would be considered and incoporated into the final design and construction specifications.

See Book 2 (4.3.2) for additional requirements.

GENERAL NOTE:

Any change orders and/or deviations from the final design must be reported to the Engineer prior to commencement of construction activities, as additional environmental clearance may be required.

---D R A F T---
This document is released for Informational purposes and is subject to change based on comments from approving agencies and public input. It is not to be used for construction purposes.

© 2012 Texas Department of Transportation
Dallas District Standard

ENVIRONMENTAL PERMITS, ISSUES AND COMMITMENTS (EPIC)

SHEET 1 OF 2

FED.RD. DIV.NO.	FEDERAL AID PROJECT NO.		HIGHWAY NO.
6			IH 35E
STATE	DISTRICT	COUNTY	NORTH
TEXAS	DALLAS	DALLAS	
CONTROL	SECTION	JOB	SHEET NO.
195, 196	03 01	050, 071, 056, 074	

DISCLAIMER:
The use of this standard is governed by the "Texas Engineering Practice Act". No warranty of any kind is made by TxDOT for any purpose whatsoever. TxDOT assumes no responsibility for the conversion of this standard to other formats or for incorrect results or damge resulting from its use.

II. WORK IN OR NEAR STREAMS, WATERBODIES AND WETLANDS CLEAN WATER ACT SECTIONS 401 AND 404 -- (CONTINUATION FROM EPIC SHEET 1 OF 2)

Required Actions: List Waters of the US Permit applies to, location in project and check Best Management Practices planned to control erosion, sedimentation and post-project TSS.

1. Section 404 permits from USACE/Section 401 Water Quality Certification from Texas Commission on Environmental Quality (TCEQ) based on the specific roadway work and linear transportation crossings identified in the permits and associated with the Draft Interim Schematic and Draft Interim Schematic ROW.

2. Table of preliminary jurisdictional features would be provided in Addendum 4 or the RID.

V. FEDERAL LISTED, PROPOSED THREATENED, ENDANGERED SPECIES, CRITICAL HABITAT, STATE LISTED SPECIES, CANDIDATE SPECIES AND MIGRATORY BIRDS TREATY ACT. - (CONTINUATION FROM EPIC SHEET 1 OF 2)

Species Potentially within Project Area w/ Description	Habitat Description
1. Timber/canebrake rattlesnake: black and brown crossbands down the back, broad dark shape present behind the eye, black tail above the rattle up to 25% of the body length.	Swamps, floodplains, upland woodlands, riparian zones, abandoned farmland; prefers dense ground cover, i.e. grapevines or palmetto.

If any of the listed terrestrial species are observed, cease work in the immediate area, do not disturb species or habitat and contact TxDOT immediately. The work may not remove active nests from bridges and other structures during nesting season of the birds associated with the nests. If caves or sinkholes are discovered, cease work in the immediated area, and contact TxDOT immediately.

Special Note: The Migratory Bird Act of 1918 states that it is unlawful to kill, capture, collect, possess, buy, sell, trade or transport any migratory bird, nest, young, feather or egg in part or in whole, without a federal permit issued in accordance within the Act's policies and regulations. The contractor would remove all old migratory bird nests from any structure where work would be done from October 1 to February 15. In addition, the contractor would be prepared to prevent migratory birds from building nest(s) between February 15 to October 1. In the event that migratory birds are encountered on-site during project construction, efforts to avoid adverse impacts on protected birds, active nests, eggs and/or young would be observed.

VI. HAZARDOUS MATERIALS OR CONTAMINATION ISSUES (CONTINUATION FROM EPIC SHEET 1 OF 2)

Action No.

1. A review of hazardous materials regulatory databases was conducted to determine if any known sites might affect the construction activites based on the interim schematic. See the Limited Phase 1 Environmental Site Assessment Report.
2. Based on this review 4 sites are categorized as high risk, 2 sites are characterized as moderate risk, 41 sites are categorized as low risk. For the high and moderate risk sites Phase II ESAs are recommended prior to the development of the plans and specifications to confirm or deny the potential presence of contamination. The Phase II ESAs should follow the ASTM Designation E1903-11, Standard Practice for Environmental Site Assessments: Phase II ESAs.
3. Developer shall prepare Hazardous Materials Management Plan (HMMP) which will be followed during construction.

GENERAL NOTE:

Any change orders and/or deviations from the final design must be reported to TxDOT prior to commencement of construction activities, as additional environmental clearance may be required.

---D R A F T---

This document is released for informational purposes and is subject to change based on comments from approving agencies and public input. It is not to be used for construction purposes.

© 2012 Texas Department of Transportation
Dallas District Standard

ENVIRONMENTAL PERMITS, ISSUES AND COMMITMENTS (EPIC)

SHEET 2 OF 2

FED. RD. DIV. NO.	FEDERAL AID PROJECT NO.		HIGHWAY NO.
6			IH 35E
STATE	DISTRICT	COUNTY	NORTH
TEXAS	DALLAS	DALLAS	SHEET NO.
CONTROL	SECTION	JOB	
195, 196	03 01	050, 071, 056, 074	

1. *Do not alter Sheet Design or Font style, size or weight - match text attributes.*
2. *If additional space is needed for a numbered section, fence and adjust sections up or down as needed for proportioning and readability but do not relocate from its relative position.*
3. *All areas should be addressed thoroughly and verify the necessary pay items are set up to support actions needed.*

Revised: October 2012
Prepared by HNTB on 10/24/12

Texas Department of Transportation
Book 2 – Technical Provisions

IH 35E Managed Lanes Project

Attachment 6-1
Utility Forms

Utility Forms

- PUAA – Developer Managed
- PUAA Owner Managed
- IH 35E – UAA – Developer Managed
- IH 35E – UAA – Owner Managed

PROJECT UTILITY ADJUSTMENT AGREEMENT
(Developer Managed)
Agreement No.: -U-_____

THIS AGREEMENT, by and between , hereinafter identified as the "**Developer**", and _____, hereinafter identified as the "**Owner**", is as follows:

WITNESSETH

WHEREAS, the STATE OF TEXAS, acting by and through the Texas Department of Transportation, hereinafter identified as "TxDOT", is authorized to design, construct, operate, maintain, and improve turnpike projects as part of the state highway system throughout the State of Texas, all in conformance with the provisions of Chapters 201, 203, 222, 223, 224, and 228 Texas Transportation Code, as amended; and

WHEREAS, the TxDOT proposes to construct a toll project identified as _____ (the "Project"); and

WHEREAS, pursuant to that certain Comprehensive Development Agreement by and between TxDOT and the Developer with respect to the Project (the "CDA"), the Developer has undertaken the obligation to design, construct, finance, operate and maintain the Project and adhere to all requirements in the CDA; and

WHEREAS, the Developer's duties pursuant to the CDA include causing the relocation, removal or other necessary adjustment of existing utilities impacted by the Project (collectively, "Adjustment"), subject to the provisions herein; and

WHEREAS, the Project may receive Federal funding, financing and/or credit assistance; and

WHEREAS, the Developer has notified the Owner that certain of its facilities and appurtenances (the "Owner Utilities") are in locational conflict with the Project (and/or with the "Ultimate Configuration" of the Project), and the Owner has requested that the Developer undertake the Adjustment of the Owner Utilities as necessary to accommodate the Project (and the Ultimate Configuration) and Owner agrees that the "Project" will be constructed in accordance with §203.092, Texas Transportation Code, as amended, Rule 21.23 of Title 43 Tex. Admin. Code, and 23 CFR 645 Subpart A (Utility Relocations, Adjustments and Reimbursement); and

WHEREAS, the Owner Utilities and the proposed Adjustment of the Owner Utilities are described as follows *[insert below a description of the affected facilities (by type, size and location) as well as a brief description of the nature of the Adjustment work to be performed (e.g., "adjust 12" waterline from approximately Highway Station 100+00 to approximately Highway Station 200+00")]:*
_____*;* and

WHEREAS, the Owner recognizes that time is of the essence in completing the work contemplated herein; and

WHEREAS, the Developer and the Owner desire to implement the Adjustment of the Owner Utilities by entering into this Agreement.

AGREEMENT

NOW, THEREFORE, in consideration of these premises and of the mutual covenants and agreements of the parties hereto and other good and valuable consideration, the receipt and sufficiency of which being hereby acknowledged, the Developer and the Owner agree as follows:

1. **Preparation of Plans.** [Check one box that applies:]

☐ The Developer has hired engineering firm(s) acceptable to the Owner to perform all engineering services needed for the preparation of plans, required specifications, and cost estimates, attached hereto as Exhibit A (collectively, the "Plans"), for the proposed Adjustment of the Owner Utilities. The Developer represents and warrants that the Plans conform to the most recent Utility Accommodation Rules issued by the Texas Department of Transportation ("TxDOT"), set forth in 43 Tex. Admin. Code Part 1, Chapter 21, Subchapter C *et seq*., (the "UAR"). By its execution of this Agreement or by the signing of the Plans, the Owner hereby approves the Plans and confirms that the Plans are in compliance with the "standards" described in Paragraph 3(a)(4).

☐ The Owner has provided plans, required specifications and cost estimates, attached hereto as Exhibit A (collectively, the "Plans"), for the proposed Adjustment of the Owner Utilities. The Owner represents and warrants that the Plans conform to the UAR. By its execution of this Agreement, the Developer and the Owner hereby approve the Plans. The Owner also has provided to the Developer a utility plan view map illustrating the location of existing and proposed utility facilities on the Developer's right of way map of the Project. With regard to its preparation of the Plans, the Owner represents as follows *[check one box that applies]*:

☐ The Owner's employees were utilized to prepare the Plans, and the charges therefore do not exceed the Owner's typical costs for such work.

☐ The Owner utilized consulting engineers to prepare the Plans, and the fees for such work are not based upon a percentage of construction costs. Further, such fees encompass only the work necessary to prepare the Plans for Adjustment of the Owner Utilities described herein, and do not include fees for work done on any other project. The fees of the consulting engineers are reasonable and are comparable to the fees typically charged by consulting engineers in the locale of the Project for comparable work for the Owner.

2. **Review by TxDOT.** The parties hereto acknowledge and agree as follows:

(a) Upon execution of this Agreement by the Developer and the Owner, the Developer will submit this Agreement, together with the attached Plans, to TxDOT for its review and approval as part of a package referred to as a "Utility Assembly". The parties agree to cooperate in good faith to modify this Agreement and/or the Plans, as necessary and mutually acceptable to all parties, to respond to any comments made by TxDOT thereon. Without limiting the generality of the foregoing, (i) the Owner agrees to respond (with comment and/or acceptance) to any modified Plans and/or Agreement prepared by the Developer in response to TxDOT comments within **fourteen (14) business days** after receipt of such modifications; and (ii) if the Owner originally prepared the Plans, the Owner agrees to modify the Plans in response to TxDOT comments and to submit such modified Plans to the Developer for its comment and/or approval (and re-submittal to

TxDOT for its comment and/or approval) within **fourteen (14) business days** after receipt of TxDOT's comments. The Owner's failure to timely respond to any modified Plans submitted by the Developer pursuant to this paragraph shall be deemed the Owner's approval of same. If the Owner fails to timely prepare modified Plans which are its responsibility hereunder, then the Developer shall have the right to modify the Plans for the Owner's approval as if the Developer had originally prepared the Plans. The process set forth in this paragraph will be repeated until the Owner, Developer and TxDOT have all approved this Agreement and accepted the Plans.

(b) The parties hereto acknowledge and agree that TxDOT's review, comments, and/or approval of a Utility Assembly or any component thereof shall constitute TxDOT's approval of the location and manner in which a Utility Assembly will be installed, adjusted, or relocated within the state highway right of way (the "ROW"), subject to the Developer's and Owner's satisfactory performance of the Adjustment work in accordance with the approved Plans. TxDOT has no duty to review Owner Facilities or components for their quality or adequacy to provide the intended utility service.

3. **Design and Construction Standards**.

(a) All design and construction performed for the Adjustment work which is the subject of this Agreement shall comply with and conform to the following:

(1) All applicable local and state laws, regulations, decrees, ordinances and policies, including the UAR, the Utility Manual issued by TxDOT (to the extent its requirements are mandatory for the Adjustment necessitated by the Project, as communicated to the Owner by the Developer, or TxDOT), the requirements of the CDA, and the policies of TxDOT;

(2) All Federal laws, regulations, decrees, ordinances and policies applicable to projects receiving Federal funding, financing and/or credit assistance, including without limitation 23 CFR 645 Subparts A and B;

(3) The terms of all governmental permits or other approvals, as well as any private approvals of third parties necessary for such work; and

(4) The standard specifications, standards of practice, and construction methods (collectively, "standards") which the Owner customarily applies to utility facilities comparable to the Owner Utilities that are constructed by the Owner or for the Owner by its contractors at the Owner's expense, which standards are current at the time this Agreement is signed by the Owner, and which the Owner has submitted to the Developer in writing.

(5) Owner agrees that all service meters must be placed outside of the State ROW.

(b) Such design and construction also shall be consistent and compatible with (i) the Developer's current design and construction of the Project, (ii) the "Ultimate Configuration" for the Project, and (iii) any other utilities being installed in the same vicinity. The Owner acknowledges receipt from the Developer of Project plans and Ultimate Configuration documents as necessary to comply with the foregoing. In case of

any inconsistency among any of the standards referenced in this Agreement, the most stringent standard shall apply.

(c) The plans, specifications, and cost estimates contained in Exhibit A shall identify and detail all utility facilities that the Owner intends to abandon in place rather than remove, including material type, quantity, size, age, and condition. No facilities containing hazardous or contaminated materials may be abandoned, but shall be specifically identified and removed in accordance with the requirements of subparagraph (a). It is understood and agreed that the Developer shall not pay for the assessment and remediation or other corrective action relating to soil and ground water contamination caused by the utility facility prior to the removal.

4. **Responsibility for Costs of Adjustment Work**. With the exception of any Betterment (hereinafter defined), the parties shall allocate the cost of any Adjustment between themselves as identified in Exhibit A and in accordance with § 203.092, Texas Transportation Code. An allocation percentage may be determined by application of an eligibility ratio, if appropriate, as detailed in Exhibit A.

5. **Construction by the Developer**.

(a) The Owner hereby requests that the Developer perform the construction necessary to adjust the Owner Utilities and the Developer hereby agrees to perform such construction. All construction work hereunder shall be performed in a good and workmanlike manner, and in accordance with the Plans (except as modified pursuant to Paragraph 16).

(b) The Developer shall retain such contractor or contractors as are necessary to adjust the Owner Utilities.

(c) The Developer shall obtain all permits necessary for the construction to be performed by the Developer hereunder, and the Owner shall cooperate in that process as needed.

6. **Reimbursement of Owner's Indirect Costs**.

(a) Developer agrees to reimburse the Owner its share of the Owner's indirect costs (e.g., engineering, inspection, testing, ROW) as identified in Exhibit A. When requested by the Owner, monthly progress payments will be made. The monthly payment will not exceed 80% of the estimated indirect work done to date. Once the indirect work is complete, final payment of the eligible indirect costs will be made. Intermediate payments shall not be construed as final payment for any items included in the intermediate payment.

(b) The Owner's indirect costs associated with Adjustment of the Owner Utilities shall be developed pursuant to the method checked and described below *[check only one box]*:

☐ (1) Actual related indirect costs accumulated in accordance with (i) a work order accounting procedure prescribed by the applicable Federal or State regulatory body, or (ii) established accounting procedure developed by the Owner and which the Owner uses in its regular operations (either (i) or (ii) referred to as "Actual Cost") or,

☐ (2) The agreed sum of $_____ ("Agreed Sum") as supported by the analysis of the Owner's estimated costs attached hereto as part of Exhibit A.

(c) All indirect costs charged to the Developer by the Owner shall be reasonable and shall be computed using rates and schedules not exceeding those applicable to similar work performed by or for the Owner at the Owner's expense. Developer's performance of the Adjustment work hereunder and payment of the Developer's share of the Owner's costs pursuant to this Agreement, if applicable, shall be full compensation to the Owner for all costs incurred by the Owner in Adjusting the Owner Utilities (including without limitation costs of relinquishing and/or acquiring right of way).

7. **Advancement of Funds by Owner for Construction Costs**.

(a) Advancement of Owner's share, if any, of estimated costs

Exhibit A shall identify all estimated engineering and construction-related costs, including labor, material, equipment and other miscellaneous construction items. Exhibit A shall also identify the Owner's and Developer's respective shares of the estimated costs.

The Owner shall advance to the Developer its allocated share, if any, of the estimated costs for construction and engineering work to be performed by the Developer, in accordance with the following terms:

☐ The adjustment of the Owner's Utilities does not require advancement of funds.

☐ The adjustment of the Owner's Utilities does require advancement of funds and the terms agreed to between the Developer and Owner are listed below.

[Insert terms of advance funding to be agreed between Developer and Owner.]

(b) Adjustment Based on Actual Costs or Agreed Sum

[Check the one appropriate provision, if advancement of funds is required]:

☐ The Owner is responsible for its share of the Developer's actual cost for the Adjustment, including the identified Betterment. Accordingly, upon completion of all Adjustment work to be performed by both parties pursuant to this Amendment, (i) the Owner shall pay to the Developers the amount, if any, by which the actual cost of the Betterment (as determined in Paragraph 9(b)) plus the actual cost of Owner's share of the Adjustment (based on the allocation set forth in Exhibit A) exceeds the estimated cost advanced by the Owner, or (ii) the Developer shall refund to the Owner the amount, if any, by which such advance exceeds such actual cost, as applicable.

☐ The Agreed Sum is the agreed and final amount due for the Adjustment, including any Betterment, under this Amendment. Accordingly, no adjustment (either up or down) of such amount shall be made based on actual costs.

8. **Invoices.** On invoices prepared by either the Owner or the Developer, all costs developed using the "Actual Cost" method described in Section 6(b)(1) shall be itemized in a format allowing for comparisons to the approved estimates, including listing each of the services performed, the amount of time spent and the date on which the service was performed. The original and three (3) copies of each invoice, together with (1) such supporting information to substantiate all invoices as reasonably requested, and (2) such waivers and releases of liens as the other party may reasonably require, shall be submitted to the other party at the address for notices stated in Paragraph 22, unless otherwise directed pursuant to Paragraph 22. The Owner and the Developer shall make commercially reasonable efforts to submit final invoices not later than one hundred twenty (120) days after completion of work. The Owner and the Developer hereby acknowledge

and agree that any costs not submitted to the other party within eighteen months following completion of all Adjustment work to be performed by the parties pursuant to this Agreement shall be deemed to have been abandoned and waived.

9. **Betterment and Salvage**

(a) For purposes of this Agreement, the term "Betterment" means any upgrading of an Owner Utility being adjusted that is not attributable to the construction of the Project and is made solely for the benefit of and at the election of the Owner, including but not limited to an increase in the capacity, capability, efficiency or function of the adjusted Utility over that provided by the existing Utility facility or an expansion of the existing Utility facility; provided, however, that the following are not considered Betterments:

(i) any upgrading which is required for accommodation of the Project;

(ii) replacement devices or materials that are of equivalent standards although not identical;

(iii) replacement of devices or materials no longer regularly manufactured with the next highest grade or size;

(iv) any upgrading required by applicable laws, regulations or ordinances;

(v) replacement devices or materials which are used for reasons of economy (e.g., non-stocked items may be uneconomical to purchase); or

(vi) any upgrading required by the Owner's written "standards" meeting the requirements of Paragraph 3(d).

[Include the following for fiber optic Owner Utilities only:] Extension of an Adjustment to the nearest splice boxes shall not be considered a Betterment if required by the Owner in order to maintain its written telephony standards.

Any upgrading required by the Owner's written "standards" meeting the requirements of Paragraph 3(a)(4) shall be deemed to be of direct benefit to the Project.

(b) It is understood and agreed that the Developer shall not pay for any Betterments and that the Owner shall be solely responsible therefor. No Betterment may be performed hereunder which is incompatible with the Project or the Ultimate Configuration or which cannot be performed within the other constraints of applicable law, any applicable governmental approvals, including without limitation the scheduling requirements thereunder. Accordingly, the parties agree as follows *[check one box that applies, and complete if appropriate]*:

☐ The Adjustment of the Owner Utilities pursuant to the Plans does not include any Betterment.

☐ The Adjustment of the Owner Utilities pursuant to the Plans includes Betterment to the Owner Utilities by reason of *[insert explanation, e.g. "replacing 12" pipe with 24" pipe]*:_____. The Developer has provided to the Owner comparative estimates for (i) all work to be performed by the Developer pursuant to this Agreement, including work attributable to the Betterment, and (ii) the cost to

perform such work without the Betterment, which estimates are hereby approved by the Owner. The estimated cost of the Developer's work hereunder which is attributable to Betterment is $_____, calculated by subtracting (ii) from (i). The percentage of the total cost of the Developer's work hereunder which is attributable to Betterment is _____%, calculated by subtracting (ii) from (i), which remainder is divided by (i).

(c) If Paragraph 9(b) identifies Betterment, the Owner shall advance to the Developer, at least **fourteen (14) business days** prior to the date scheduled for commencement of construction for Adjustment of the Owner Utilities, the estimated cost attributable to Betterment as set forth in Paragraph 9(b). Should the Owner fail to advance payment to the Developer fourteen (14) business days prior to commencement of the Adjustment construction, the Developer shall have the option of commencing and completing (without delay) the Adjustment work without installation of the applicable Betterment. *[If Paragraph 9(b) identifies Betterment, check the one appropriate provision]*:

☐ The estimated cost stated in Paragraph 9(b) is the agreed and final amount due for Betterment hereunder, and accordingly no adjustment (either up or down) of such amount shall be made based on actual costs.

☐ The Owner is responsible for the Developer's actual cost for the identified Betterment. Accordingly, upon completion of all Adjustment work to be performed by both parties pursuant to this Agreement, (i) the Owner shall pay to the Developer the amount, if any, by which the actual cost of the Betterment (determined as provided below in this paragraph) exceeds the estimated cost advanced by the Owner, or (ii) the Developer shall refund to the Owner the amount, if any, by which such advance exceeds such actual cost, as applicable. Any additional payment by the Owner shall be due within **sixty (60) calendar days** after the Owner's receipt of the Developer's invoice therefor, together with supporting documentation; any refund shall be due within **sixty (60) calendar days** after completion of the Adjustment work hereunder. The actual cost of Betterment incurred by the Developer shall be calculated by multiplying (i) the Betterment percentage stated in Paragraph 9(b), by (ii) the actual cost of all work performed by the Developer pursuant to this Agreement (including work attributable to the Betterment), as invoiced by the Developer to the Owner.

(d) If Paragraph 9(b) identifies Betterment, the amount allocable to Betterment in Owner's indirect costs shall be determined by applying the percentage of the Betterment calculated in Paragraph 9(b) to the Owner's indirect costs. The Owner's invoice to the Developer for the Developer's share of the Owner's indirect costs shall credit the Developer with any Betterment amount determined pursuant to this Paragraph 9(d).

(e) For any Adjustment from which the Owner recovers any materials and/or parts and retains or sells the same, after application of any applicable Betterment credit, the Owner's invoice to the Developer for its costs shall credit the Developer with the salvage value for such materials and/or parts..

(f) The determinations and calculations of Betterment described in this Paragraph 9 shall exclude right of way acquisition costs. Betterment in connection with right-of-way acquisition is addressed in Paragraph 15.

10. **Management of the Adjustment Work.** The Developer will provide project management during the Adjustment of the Owner Utilities.

11. **Utility Investigations.** At the Developer's request, the Owner shall assist the Developer in locating any Utilities (including appurtenances) which are owned and/or operated by Owner and may be impacted by the Project. Without limiting the generality of the foregoing, in order to help assure that neither the adjusted Owner Utilities nor existing, unadjusted utilities owned or operated by the Owner are damaged during construction of the Project, the Owner shall mark in the field the location of all such utilities horizontally on the ground in advance of Project construction in the immediate area of such utilities.

12. **Inspection and Acceptance by the Owner**.

    (a) Throughout the Adjustment construction hereunder, the Owner shall provide adequate inspectors for such construction. The work shall be inspected by the Owner's inspector(s) at least once each working day, and more often if such inspections are deemed necessary by Owner. Further, upon request by the Developer or its contractors, the Owner shall furnish an inspector at any reasonable time in which construction is underway pursuant to this Agreement, including occasions when construction is underway in excess of the usual forty (40) hour work week and at such other times as reasonably required. The Owner agrees to promptly notify the Developer of any concerns resulting from any such inspection.

    (b) The Owner shall perform a final inspection of the adjusted Owner Utilities, including conducting any tests as are necessary or appropriate, within **five (5) business days** after completion of construction hereunder. The Owner shall accept such construction if it is consistent with the performance standards described in Paragraph 3, by giving written notice of such acceptance to the Developer within said **five (5) day** period. If the Owner does not accept the construction, then the Owner shall, not later than the expiration of said **five (5) day** period, notify the Developer in writing of its grounds for non-acceptance and suggestions for correcting the problem, and if the suggested corrections are justified, the Developer will comply. The Owner shall re-inspect any revised construction (and re-test if appropriate) and give notice of acceptance, not later than **five (5) business days** after completion of corrective work. The Owner's failure to inspect and/or to give any required notice of acceptance or non-acceptance within the specified time period shall be deemed acceptance.

    (c) From and after the Owner's acceptance (or deemed acceptance) of an adjusted Owner Utility, the Owner agrees to accept ownership of, and full operation and maintenance responsibility for, such Owner Utility.

13. **Design Changes.** The Developer will be responsible for additional Adjustment design and construction costs necessitated by design changes to the Project, upon the terms specified herein.

14. **Field Modifications.** The Developer shall provide the Owner with documentation of any field modifications, including Utility Adjustment Field Modifications as well as minor changes described in Paragraph 16(b), occurring in the Adjustment of the Owner Utilities.

15. **Real Property Interests.**

    (a) The Owner has provided, or upon execution of this Agreement shall promptly provide to the Developer, documentation acceptable to TxDOT indicating any right, title or interest

in real property claimed by the Owner with respect to the Owner Utilities in their existing location(s). Such claims are subject to TxDOT's approval as part of its review of the Developer Utility Assembly as described in Paragraph 2. Claims approved by TxDOT as to rights or interests are referred to herein as "Existing Interests".

(b) If acquisition of any new easement or other interest in real property ("New Interest") is necessary for the Adjustment of any Owner Utilities, then the Owner shall be responsible for undertaking such acquisition. The Owner shall implement each acquisition hereunder expeditiously so that related Adjustment construction can proceed in accordance with the Developer's Project schedules. The Developer shall be responsible for its share (as specified in Paragraph 4) of the actual and reasonable acquisition costs of any such New Interest (including without limitation the Owner's reasonable overhead charges and reasonable legal costs as well as compensation paid to the landowner), excluding any costs attributable to Betterment as described in Paragraph 15(c), and subject to the provisions of Paragraph 15(e); provided, however, that all acquisition costs shall be subject to the Developer's prior written approval. Eligible acquisition costs shall be segregated from other costs on the Owner's estimates and invoices. Any such New Interest shall have a written valuation and shall be acquired in accordance with applicable law.

(c) The Developer shall pay its share only for a replacement in kind of an Existing Interest (e.g., in width and type), unless a New Interest exceeding such standard (i) is required in order to accommodate the Project or by compliance with applicable law, or (ii) is called for by the Developer in the interest of overall Project economy. Any New Interest which is not the Developer's responsibility pursuant to the preceding sentence shall be considered a Betterment to the extent that it upgrades the Existing Interest which it replaces, or in its entirety if the related Owner Utility was not installed pursuant to an Existing Interest. Betterment costs shall be solely the Owner's responsibility.

(d) For each Existing Interest located within the final Project right of way, upon completion of the related Adjustment work and its acceptance by the Owner, the Owner agrees to execute a quitclaim deed or other appropriate documentation relinquishing such Existing Interest to TxDOT, unless the affected Owner Utility is remaining in its original location or is being reinstalled in a new location within the area subject to such Existing Interest. All quitclaim deeds or other relinquishment documents shall be subject to TxDOT's approval as part of its review of the Utility Assembly as described in Paragraph 2. For each such Existing Interest relinquished by the Owner, the Developer shall do one of the following to compensate the Owner for such Existing Interest, as appropriate:

(e) (i) If the Owner acquires a New Interest for the affected Owner Utility, the Developer shall reimburse the Owner for the Developer's share of the Owner's actual and reasonable acquisition costs in accordance with Paragraph 15(b), subject to Paragraph 15(c); or

(ii) If the Owner does not acquire a New Interest for the affected Owner Utility, the Developer shall compensate the Owner for the Developer's share of the fair market value of such relinquished Existing Interest, as mutually agreed between the Owner and the Developer and supported by a written valuation.

The compensation provided to the Owner pursuant to either subparagraph (i) or subparagraph (ii) above shall constitute complete compensation to the Owner for the relinquished Existing Interest and any New Interest, and no further compensation shall be

due to the Owner from the Developer or TxDOT on account of such Existing Interest or New Interest(s).

(f) The Owner shall execute a Utility Joint Use Acknowledgment (TxDOT-U-80A) for each Adjustment where required pursuant to TxDOT policies. All Utility Joint Use Acknowledgments shall be subject to TxDOT approval as part of its review of the Utility Assembly as described in Paragraph 2.

16. **Amendments and Modifications.** This Agreement may be amended or modified only by a written instrument executed by the parties hereto, in accordance with Paragraph 16(a) or Paragraph 16(b) below.

(a) Except as otherwise provided in Paragraph 16(b), any amendment or modification to this Agreement or the Plans attached hereto shall be implemented by a Utility Adjustment Agreement Amendment ("UAAA") in the form of Exhibit B hereto (TxDOT-CDA-U-35A-DM). The UAAA form can be used for a new scope of work with concurrence of the Developer and TxDOT as long as the design and construction responsibilities have not changed. Each UAAA is subject to the review and approval of TxDOT, prior to its becoming effective for any purpose and prior to any work being initiated thereunder. The Owner agrees to keep and track costs for each UAAA separately from other work being performed.

(b) For purposes of this Paragraph 16(b), "Utility Adjustment Field Modification" shall mean any horizontal or vertical design change from the Plans included in a Utility Assembly previously approved by TxDOT, due either to design of the Project or to conditions not accurately reflected in the approved Utility Assembly (e.g., shifting the alignment of an 8 in. water line to miss a modified or new roadway drainage structure). A Utility Adjustment Field Modification agreed upon by the Developer and Owner does not require a UAAA, provided that the modified Plans have been submitted to TxDOT for its review and comment. A minor change (e.g., an additional water valve, an added utility marker at a ROW line, a change in vertical bend, etc.) will not be considered a Utility Adjustment Field Modification and will not require a UAAA, but shall be shown in the documentation required pursuant to Paragraph 14.

(c) This Agreement does not alter and shall not be construed in any way to alter the obligations, responsibilities, benefits, rights, remedies, and claims between the Developer and TxDOT to design and construct the Project, including the Adjustment.

17. **Entire Agreement.** This Agreement embodies the entire agreement between the parties and there are no oral or written agreements between the parties or any representations made which are not expressly set forth herein.

18. **Assignment; Binding Effect; TxDOT as Third Party Beneficiary.** Neither the Owner or the Developer may assign any of its rights or delegate any of its duties under this Agreement without the prior written consent of the other party and of TxDOT, which consent may not be unreasonably withheld or delayed; provided, however, that the Developer may assign any of its rights and/or delegate any of its duties to TxDOT or to any other entity engaged by TxDOT to fulfill the Developer's obligations, at any time without the prior consent of the Owner.

This Agreement shall bind the Owner, the Developer and their successors and permitted assigns, and nothing in this Agreement nor in any approval subsequently provided by any party hereto shall be construed as giving any benefits, rights, remedies, or claims to any other person, firm,

corporation or other entity, including, without limitation, any contractor or other party retained for the Adjustment work or the public in general; provided, however, that the Owner and the Developer agree that although TxDOT is not a party to this Agreement, TxDOT is intended to be a third-party beneficiary to this Agreement.

19. **Breach by the Parties.**

(a) If the Owner claims that the Developer has breached any of its obligations under this Agreement, the Owner will notify the Developer and TxDOT in writing of such breach, and the Developer shall have 30 days following receipt of such notice in which to cure such breach, before the Owner may invoke any remedies which may be available to it as a result of such breach; provided, however, that both during and after such period TxDOT shall have the right, but not the obligation, to cure any breach by the Developer. Without limiting the generality of the foregoing, (a) TxDOT shall have no liability to the Owner for any act or omission committed by the Developer in connection with this Agreement, including without limitation any claimed defect in any design or construction work supplied by the Developer or by its contractors, and (b) in no event shall TxDOT be responsible for any repairs or maintenance to the Owner Utilities Adjusted pursuant to this Agreement.

(b) If the Developer claims that the Owner has breached any of its obligations under this Agreement, the Developer will notify the Owner and TxDOT in writing of such breach, and the Owner shall have 30 days following receipt of such notice in which to cure such breach, before the Developer may invoke any remedies which may be available to it as a result of such breach.

20. **Traffic Control.** The Developer shall provide traffic control or shall reimburse the Owner for the Developer's share (if any, as specified in Paragraph 4) of the costs for traffic control made necessary by the Adjustment work performed by either the Developer or the Owner pursuant to this Agreement, in compliance with the requirements of the Texas Manual on Uniform Traffic Control Devices. Betterment percentages calculated in Paragraph 9 shall also apply to traffic control costs.

21. **Notices.** Except as otherwise expressly provided in this Agreement, all notices or communications pursuant to this Agreement shall be sent or delivered to the following:

The Owner:

Phone:
Fax:

The Developer:

Phone:
Fax:

A party sending a notice of default of this Agreement to another party shall also send a copy of such notice to TxDOT and the CDA Utility Manager at the following addresses:

TxDOT: TxDOT Department of Transportation

Attention: Donald C. Toner, Jr., SR/WA
125 E. 11th Street
Austin, Texas 78701-2483
Phone: (512) 936-0980

CDA Utility Manager:

Any notice or demand required herein shall be given (a) personally, (b) by certified or registered mail, postage prepaid, return receipt requested, or (c) by reliable messenger or overnight courier to the appropriate address set forth above. Any notice served personally shall be deemed delivered upon receipt, and any notice served by certified or registered mail or by reliable messenger or overnight courier shall be deemed delivered on the date of receipt as shown on the addressee's registry or certification of receipt or on the date receipt is refused as shown on the records or manifest of the U.S. Postal Service or such courier. Any party may from time to time designate any other address for this purpose by written notice to all other parties; TxDOT may designate another address by written notice to all parties.

22. **Approvals.** Any acceptance, approval, or any other like action (collectively "Approval") required or permitted to be given by either the Developer, , the Owner or TxDOT pursuant to this Agreement:

(a) Must be in writing to be effective (except if deemed granted pursuant hereto),

(b) Shall not be unreasonably withheld or delayed; and if Approval is withheld, such withholding shall be in writing and shall state with specificity the reason for withholding such Approval, and every effort shall be made to identify with as much detail as possible what changes are required for Approval, and

(c) Except for approvals by TxDOT, and except as may be specifically provided otherwise in this Agreement, shall be deemed granted if no response is provided to the party requesting an Approval within the time period prescribed by this Agreement (or if no time period is prescribed, then fourteen (14) calendar days), commencing upon actual receipt by the party from which an Approval is requested or required, of a request for Approval from the requesting party. All requests for Approval shall be sent out by the requesting party to the other party in accordance with Paragraph 21.

23. **Time**.

(a) Time is of the essence in the performance of this Agreement.

(b) All references to “days” herein shall be construed to refer to calendar days, unless otherwise stated.

(c) No party shall be liable to another party for any delay in performance under this Agreement from any cause beyond its control and without its fault or negligence (“Force Majeure”), such as acts of God, acts of civil or military authority, fire, earthquake, strike, unusually severe weather, floods or power blackouts.

24. **Continuing Performance.** In the event of a dispute, the Owner and the Developer agree to continue their respective performance hereunder to the extent feasible in light of the dispute,

including paying billings, and such continuation of efforts and payment of billings shall not be construed as a waiver of any legal right.

25. **Equitable Relief.** The Developer and the Owner acknowledge and agree that delays in Adjustment of the Owner Utilities will impact the public convenience, safety and welfare, and that (without limiting the parties' remedies hereunder) monetary damages would be inadequate to compensate for delays in the construction of the Project. Consequently, the parties hereto (and TxDOT as well, as a third party beneficiary) shall be entitled to specific performance or other equitable relief in the event of any breach of this Agreement which threatens to delay construction of the Project; provided, however, that the fact that specific performance or other equitable relief may be granted shall not prejudice any claims for payment or otherwise related to performance of the Adjustment work hereunder.

26. **Authority.** The Owner and the Developer each represent and warrant to the other party that the warranting party possesses the legal authority to enter into this Agreement and that it has taken all actions necessary to exercise that authority and to lawfully authorize its undersigned signatory to execute this Agreement and to bind such party to its terms. Each person executing this Agreement on behalf of a party warrants that he or she is duly authorized to enter into this Agreement on behalf of such party and to bind it to the terms hereof.

27. **Cooperation.** The parties acknowledge that the timely completion of the Project will be influenced by the ability of the Owner (and its contractors) and the Developer to coordinate their activities, communicate with each other, and respond promptly to reasonable requests. Subject to the terms and conditions of this Agreement, the Owner and the Developer agree to take all steps reasonably required to coordinate their respective duties hereunder in a manner consistent with the Developer's current and future construction schedules for the Project.

28. **Termination.** If the Project is canceled or modified so as to eliminate the necessity of the Adjustment work described herein, then the Developer shall notify the Owner in writing and the Developer reserves the right to thereupon terminate this Agreement. Upon such termination, the parties shall negotiate in good faith an amendment that shall provide mutually acceptable terms and conditions for handling the respective rights and liabilities of the parties relating to such termination.

29. **Nondiscrimination**. Each party hereto agrees, with respect to the work performed by such party pursuant to this Agreement, that such party shall not discriminate on the grounds of race, color, sex, national origin or disability in the selection and/or retention of contractors and consultants, including procurement of materials and leases of equipment.

30. **Applicable Law, Jurisdiction and Venue**. This Agreement shall be governed by the laws of the State of Texas, without regard to the conflict of laws principles thereof. Venue for any action brought to enforce this Agreement or relating to the relationship between any of the parties shall be the District Court of Travis County, Texas or the United States District Court for the Western District of Texas (Austin).

31. **Waiver of Consequential Damages.** No party hereto shall be liable to any other party to this Agreement, whether in contract, tort, equity, or otherwise (including negligence, warranty, indemnity, strict liability, or otherwise,) for any punitive, exemplary, special, indirect, incidental, or consequential damages, including, without limitation, loss of profits or revenues, loss of use, claims of customers, or loss of business opportunity.

32. **Captions**. The captions and headings of the various paragraphs of this Agreement are for convenience and identification only, and shall not be deemed to limit or define the content of their respective paragraphs.

33. **Counterparts.** This Agreement may be executed in any number of counterparts. Each such counterpart hereof shall be deemed to be an original instrument but all such counterparts together shall constitute one and the same instrument.

34. **Effective Date.** This Agreement shall become effective upon the later of (a) the date of signing by the last party (either the Owner or Developer) signing this Agreement, and (b) the date of TxDOT's approval as indicated by the signature of TxDOT's representative, below.

APPROVED BY:
TEXAS DEPARTMENT OF TRANSPORTATION

By: _____
Authorized Signature

Printed
Name: Donald C. Toner, Jr., SR/WA

Strategic Projects Division

Date: _____

OWNER

_____
[Print Owner Name]

By: _____
Duly Authorized Representative

Printed
Name: _____

Title: _____

Date: _____

DEVELOPER

By: _____
Duly Authorized Representative

Printed
Name: _____

Title: _____

Date: _____

County:
ROW CSJ No.:
Const. CSJ No.:
Highway:
Limits:
Fed. Proj. No.:

EXHIBIT A

PLANS, SPECIFICATIONS, COST ESTIMATES AND ALLOCATION

County:
ROW CSJ No.:
Const. CSJ No.:
Highway:
Limits:
Fed. Proj. No.:

EXHIBIT B

UTILITY ADJUSTMENT AGREEMENT AMENDMENT
(TxDOT-CDA-U-35A-DM)

County:
ROW CSJ No.:

Const. CSJ No.:

Highway:
Limits:
Fed. Proj. No.:

PROJECT UTILITY ADJUSTMENT AGREEMENT
(Owner Managed)
Agreement No.: -U-_____

THIS AGREEMENT, by and between _____, hereinafter identified as the "**Developer**", and _____, hereinafter identified as the "**Owner**", is as follows:

WITNESSETH

WHEREAS, the STATE OF TEXAS, acting by and through the Texas Department of Transportation, hereinafter identified as "TxDOT", is authorized to design, construct, operate, maintain, and improve turnpike projects as part of the state highway system throughout the State of Texas, all in conformance with the provisions of Chapters 201, 203, 222, 223, 224 and 228, Texas Transportation Code, as amended; and

WHEREAS, TxDOT proposes to construct a toll project identified as the _____ Project (the "Project"); and

WHEREAS, pursuant to that certain Comprehensive Development Agreement by and between TxDOT and the Developer with respect to the Project (the "CDA"), the Developer has undertaken the obligation to design, construct, finance, operate and maintain the Project and adhere to all requirements in the CDA; and

WHEREAS, the Developer's duties pursuant to the CDA include causing the relocation, removal, or other necessary adjustment of existing utilities impacted by the Project (collectively, "Adjustment"), subject to the provisions herein; and

WHEREAS, the Project may receive Federal funding, financing and/or credit assistance; and

WHEREAS, the Developer has notified the Owner that certain of its facilities and appurtenances (the "Owner Utilities") are in locational conflict with the Project (and/or the "Ultimate Configuration" of the Project), and the Owner has decided to undertake the Adjustment of the Owner Utilities and agrees that the "Project" will be constructed in accordance with §203.092, Texas Transportation Code, as amended, Rule 21.23 of Title 43 Tex. Admin. Code, and 23 CFR 645A (Utility Relocations, Adjustments and Reimbursement); and

WHEREAS, the Owner Utilities and the proposed Adjustment of the Owner Utilities are described as follows *[insert below a description of the affected facilities (by type, size and location) as well as a brief description of the nature of the Adjustment work to be performed (e.g., "adjust 12" waterline from approximately Highway Station 100+00 to approximately Highway Station 200+00")]:*

_____; and

WHEREAS, the Owner recognizes that time is of the essence in completing the work contemplated herein; and

WHEREAS, the Developer and the Owner desire to implement the Adjustment of the Owner Utilities by entering into this Agreement.

AGREEMENT

NOW, THEREFORE, in consideration of these premises and of the mutual covenants and agreements of the parties hereto and other good and valuable consideration, the receipt and sufficiency of which being hereby acknowledged, the Developer and the Owner agree as follows:

1. **Preparation of Plans.** *[Check one box that applies:]*

☐ The Developer has hired engineering firm(s) acceptable to the Owner to perform all engineering services needed for the preparation of plans, required specifications, and cost estimates, attached hereto as Exhibit A (collectively, the "Plans"), for the proposed Adjustment of the Owner Utilities. The Developer represents and warrants that the Plans conform to the most recent Utility Accommodation Rules issued by the Texas Department of Transportation ("TxDOT"), set forth in 43 Tex. Admin. Code, Part 1, Chapter 21, Subchapter C, *et seq*. (the "UAR"). By its execution of this Agreement or by the signing of the Plans, Owner hereby approves and confirms that the Plans are in compliance with the "standards" described in Paragraph 3(d).

☐ The Owner has provided plans, required specifications and cost estimates, attached hereto as Exhibit A (collectively, the "Plans"), for the proposed Adjustment of the Owner Utilities. The Owner represents and warrants that the Plans conform to the UAR. By its execution of this Agreement theDeveloper hereby approves the Plans. The Owner also has provided to the Developer a utility plan view map illustrating the location of existing and proposed utility facilities on the Developer's right of way map of the Project. With regard to its preparation of the Plans, Owner represents as follows *[check one box that applies]*:

☐ The Owner's employees were utilized to prepare the Plans, and the charges therefore do not exceed the Owner's typical costs for such work.

☐ The Owner utilized consulting engineers to prepare the Plans, and the fees for such work are not based upon a percentage of construction costs. Further, such fees encompass only the work necessary to prepare the Plans for Adjustment of the Owner Utilities described herein, and do not include fees for work done on any other project. The fees of the consulting engineers are reasonable and are comparable to the fees typically charged by consulting engineers in the locale of the Project for comparable work for the Owner.

2. **Review by TxDOT.** The parties hereto acknowledge and agree as follows:

(a) Upon execution of this Agreement by the Developer and the Owner, the Developer will submit this Agreement, together with the attached Plans, to TxDOT for its review and approval as part of a package referred to as a "Utility Assembly". The parties agree to cooperate in good faith to modify this Agreement and/or the Plans, as necessary and

mutually acceptable to all parties, to respond to any comments made by TxDOT thereon. Without limiting the generality of the foregoing, (i) the Owner agrees to respond (with comment and/or acceptance) to any modified Plans and/or Agreement prepared by the Developer in response to TxDOT comments within **fourteen (14) business days** after receipt of such modifications; and (ii) if the Owner originally prepared the Plans, the Owner agrees to modify the Plans in response to TxDOT comments and to submit such modified Plans to the Developer for its comment and/or approval (and re-submittal to TxDOT for its comment and/or approval) within **fourteen (14) business days** after receipt of TxDOT's comments. The Owner's failure to timely respond to any modified Plans submitted by the Developer pursuant to this paragraph shall be deemed the Owner's approval of same. If the Owner fails to timely prepare modified Plans which are its responsibility hereunder, then the Developer shall have the right to modify the Plans for the Owner's approval as if the Developer had originally prepared the Plans. The Developer shall be responsible for providing Plans to and obtaining comments on and approval of the Plans from the Developer. The process set forth in this paragraph will be repeated until the Owner, the Developer and TxDOT have all approved this Agreement and the Plans.

(b) The parties hereto acknowledge and agree that TxDOT's review, comments, and/or approval of a Utility Assembly or any component thereof shall constitute TxDOT's approval of the location and manner in which a Utility Assembly will be installed, adjusted, or relocated within the state highway right of way, subject to the Developer's and Owner's satisfactory performance of the Adjustment work in accordance with the approved Plans. TxDOT has no duty to review Owner facilities or components for their quality or adequacy to provide the intended utility service.

3. **Design and Construction Standards.**

(a) All design and construction performed for the Adjustment work which is the subject of this Agreement shall comply with and conform to the following:

(1) All applicable local and state laws, regulations, decrees, ordinances and policies, including the UAR, the Utility Manual issued by TxDOT (to the extent its requirements are mandatory for Utility Adjustments necessitated by the Project, communicated to the Owner by the Developer or TxDOT), the requirements of the CDA, and the policies of TxDOT;

(2) All Federal laws, regulations, decrees, ordinances and policies applicable to projects receiving Federal funding, financing and/or credit assistance, including without limitation 23 CFR 645 Subparts A and B;

(3) The terms of all governmental permits or other approvals, as well as any private approvals of third parties necessary for such work; and

(4) The standard specifications, standards of practice, and construction methods (collectively, "standards") which the Owner customarily applies to facilities comparable to the Owner Utilities that are constructed by the Owner or for the Owner by its contractors at the Owner's expense, which standards are current at the time this Agreement is signed by the Owner, and which the Owner has submitted to the Developer in writing.

(5) Owner agrees that all service meters must be placed outside of the State ROW.

(b) Such design and construction also shall be consistent and compatible with (i) the Developer's current design and construction of the Project, (ii) the "Ultimate Configuration" for the Project, and (iii) any other utilities being installed in the same vicinity. The Owner acknowledges receipt from the Developer of Project plans and Ultimate Configuration documents as necessary to comply with the foregoing. In case of any inconsistency among any of the standards referenced in this Agreement, the most stringent standard shall apply.

(c) The plans, specifications, and cost estimates contained in Exhibit A shall identify and detail all utility facilities that the Owner intends to abandon in place rather than remove, including material type, quantity, size, age, and condition. No facilities containing hazardous or contaminated materials may be abandoned, but shall be specifically identified and removed in accordance with the requirements of subparagraph (a). It is understood and agreed that the Developer shall not pay for the assessment and remediation or other corrective action relating to soil and ground water contamination caused by the utility facility prior to the removal.

4. **Construction by the Owner; Scheduling.**

(a) The Owner hereby agrees to perform the construction necessary to adjust the Owner Utilities. All construction work hereunder shall be performed in a good and workmanlike manner, and in accordance with the Plans (except as modified pursuant to Paragraph 17). The Owner agrees that during the Adjustment of the Owner Utilities, the Owner and its contractors will coordinate their work with the Developer so as not to interfere with the performance of work on the Project by the Developer or by any other party. "Interfere" means any action or inaction that interrupts, interferes, delays or damages Project work.

(b) The Owner may utilize its own employees or may retain such contractor or contractors as are necessary to adjust the Owner Utilities, through the procedures set forth in Form TxDOT-U-48 "Statement Covering Contract Work" attached hereto as Exhibit C. If the Owner utilizes its own employees for the Construction work portion of the Adjustment of Owner Utilities, a Form TxDOT-U-48 is not required. If the Adjustment of the Owner Utilities is undertaken by the Owner's contractor under a competitive bidding process, all bidding and contracting shall be conducted in accordance with all federal and state laws and regulations applicable to the Owner and the Project.

(c) The Owner shall obtain all permits necessary for the construction to be performed by the Owner hereunder, and the Developer shall cooperate in that process as needed. The Owner shall submit a traffic control plan to the Developer as required for Adjustment work to be performed on existing road rights of way.

(d) The Owner shall commence its construction for Adjustment of each Owner Utility hereunder promptly after (i) receiving written notice to proceed therewith from the Developer, and (ii) any Project right of way necessary for such Adjustment has been acquired either by Developer (for adjusted facilities to be located within the Project right of way) or by the Owner (for adjusted facilities to be located outside of the Project right of way), or a right-of-entry permitting Owner's construction has been obtained from the landowner by the Developer or by the Owner with the Developer's prior approval. The Owner shall notify the Developer at least 72 hours prior to commencing construction for the Adjustment of each Owner Utility hereunder.

(e) The Owner shall expeditiously stake the survey of the proposed locations of the Owner Utilities being adjusted, on the basis of the final approved Plans. The Developer shall verify that the Owner's Utilities, whether moving to a new location or remaining in place, clear the planned construction of the Project as staked in the field as well as the Ultimate Configuration.

(f) The Owner shall complete all of the Utility reconstruction and relocation work, including final testing and acceptance thereof *[check one box that applies]*:

☐ on or before _____, 20___.

☐ a duration not to exceed _____ calendar days upon notice to proceed by the Developer.

(g) The amount of reimbursement due to the Owner pursuant to this Agreement for the affected Adjustment(s) shall be reduced by ten percent (10%) for each 30-day period (and by a pro rata amount of said ten percent (10%) for any portion of a 30-day period) by which the final completion and acceptance date for the affected Adjustment(s) exceeds the applicable deadline. The provisions of this Paragraph 4(g) shall not limit any other remedy available to the Developer at law or in equity as a result of the Owner's failure to meet any deadline hereunder.

The above reduction applies except to the extent due to (i) Force Majeure as described in Paragraph 24(c), (ii) any act or omission of the Developer, if the Owner fails to meet any deadline established pursuant to Paragraph 4(f), or (iii) if the Developer and/or TxDOT determine, in their sole discretion, that a delay in the relocation work is the result of circumstances beyond the control of the Owner or Owner's contractor and the Developer will not reduce the reimbursement.

5. **Costs of the Work.**

(a) The Owner's costs for Adjustment of each Owner Utility shall be derived from (i) the accumulated total of costs incurred by the Owner for design and construction of such Adjustment, plus (ii) the Owner's other related costs to the extent permitted pursuant to Paragraph 5(c) (including without limitation the eligible engineering costs incurred by the Owner for design prior to execution of this Agreement), plus (iii) the Owner's right of way acquisition costs, if any, which are reimbursable pursuant to Paragraph 16.

(b) The Owner's costs associated with Adjustment of the Owner Utilities shall be developed pursuant to the method checked and described below *[check only one box]*:

☐ (1) Actual costs accumulated in accordance with a work order accounting procedure prescribed by the applicable Federal or State regulatory body ("Actual Cost"); or

☐ (2) Actual costs accumulated in accordance with an established accounting procedure developed by the Owner and which the Owner uses in its regular operations ("Actual Cost"); or

☐ (3) The agreed sum of $ _____ ("Agreed Sum"), as supported by the analysis of estimated costs attached hereto as part of Exhibit A.

6. **Responsibility for Costs of Adjustment Work.**

The Agreed Sum or Actual Cost, as applicable, of all work to be performed pursuant to this Agreement shall be allocated between the Developer and the Owner as identified in Exhibit A and in accordance with §203.092, Texas Transportation Code. An allocation percentage may be determined by application of an eligibility ratio, if appropriate, as detailed in Exhibit A; provided, however, that any portion of an Agreed Sum or Actual Cost attributable to Betterment shall be allocated 100% to the Owner in accordance with Paragraph 10. All costs charged to the Developer by the Owner shall be reasonable and shall be computed using rates and schedules not exceeding those applicable to similar work performed by or for the Owner at the Owner's expense. Payment of the costs allocated to the Developer pursuant to this Agreement (if any) shall be full compensation to the Owner for all costs incurred by the Owner in Adjusting the Owner Utilities (including without limitation costs of relinquishing and/or acquiring right of way).

7. **Billing, Payment, Records and Audits: Actual Cost Method.** The following provisions apply if the Owner's costs are developed under procedure (1) or (2) described in Paragraph 5(b):

(a) After (i) completion of all Adjustment work to be performed pursuant to this Agreement, (ii) the Developer's final inspection of the Adjustment work by Owner hereunder (and resolution of any deficiencies found), and (iii) receipt of an invoice complying with the applicable requirements of Paragraph 9, the Developer shall pay to the Owner an amount equal to ninety percent (90%) of the Developer's share of the Owner's costs as shown in such final invoice (less amounts previously paid, and applicable credits). After completion of the Developer's audit referenced in Paragraph 7(c) and the parties' mutual determination of any necessary adjustment to the final invoice resulting therefrom, the Developer shall make any final payment due so that total payments will equal the total amount of the Developer's share reflected on such final invoice (as adjusted, if applicable).

(b) When requested by the Owner and properly invoiced in accordance with Paragraph 9, the Developer shall make intermediate payments to the Owner based upon the progress of the work completed at not more than monthly intervals, and such payments shall not exceed eighty percent (80%) of the Developer's share of the Owner's eligible costs as shown in each such invoice (less applicable credits). Intermediate payments shall not be construed as final payment for any items included in the intermediate payment.

(c) The Owner shall maintain complete and accurate cost records for all work performed pursuant to this Agreement,. The Owner shall maintain such records for four (4) years after receipt of final payment hereunder. The Developer and their respective representatives shall be allowed to audit such records during the Owner's regular business hours. Unsupported charges will not be considered eligible for reimbursement.

The parties shall mutually agree upon (and shall promptly implement by payment or refund, as applicable) any financial adjustment found necessary by the Developer's audit. TxDOT, the Federal Highway Administration, and their respective representatives also shall be allowed to audit such records upon reasonable notice to the Owner, during the Owner's regular business hours.

8. **Billing and Payment: Agreed Sum Method.** If the Owner's costs are developed under procedure (3) described in Paragraph 5(b), then the Developer shall pay its share of the Agreed Sum to the Owner after (a) completion of all Adjustment work to be performed pursuant to this Agreement, (b) the Developer's final inspection of the Adjustment work by Owner hereunder (and resolution of any deficiencies found), and (c) receipt of an invoice complying with the applicable requirements of Paragraph 9.

9. **Invoices.** If the Owner's costs are developed under procedure (1) or (2) described in Paragraph 5(b), then Owner shall list each of the services performed, the amount of time spent and the date on which the service was performed. The original and three (3) copies of each invoice shall be submitted to the Developer at the address for notices stated in Paragraph 22, unless otherwise directed by the Developer pursuant to Paragraph 22, together with (1) such supporting information to substantiate all invoices as reasonably requested by the Developer, and (2) such waivers or releases of liens as the Developer may reasonably require. The Owner shall make commercially reasonable efforts to submit final invoices not later than one hundred twenty (120) days after completion of work. Final invoices shall include any necessary quitclaim deeds pursuant to Paragraph 16, and all applicable record drawings accurately representing the Adjustment as installed. The Owner hereby acknowledges and agrees that any right it may have for reimbursement of any of its costs not submitted to the Developer within eighteen months following completion of all Adjustment work to be performed by both parties pursuant to this Agreement shall be deemed to have been abandoned and waived. Invoices shall clearly delineate total costs, and those costs that are reimbursable pursuant to the terms of this Agreement.

10. **Betterment.**

(a) For purposes of this Agreement, the term "Betterment" means any upgrading of an Owner Utility being adjusted that is not attributable to the construction of the Project and is made solely for the benefit of and at the election of the Owner, including but not limited to an increase in the capacity, capability, efficiency or function of the adjusted Utility over that provided by the existing Utility facility or an expansion of the existing Utility facility; provided, however, that the following are not considered Betterments:

(i) any upgrading which is required for accommodation of the Project;

(ii) replacement devices or materials that are of equivalent standards although not identical;

(iii) replacement of devices or materials no longer regularly manufactured with the next highest grade or size;

(iv) any upgrading required by applicable laws, regulations or ordinances;

(v) replacement devices or materials which are used for reasons of economy (e.g., non-stocked items may be uneconomical to purchase); or

(vi) any upgrading required by the Owner's written "standards" meeting the requirements of Paragraph 3(a)(4).

[Include the following for fiber optic Owner Utilities only:] Extension of an Adjustment to the nearest splice boxes shall not be considered a Betterment if required by the Owner in order to maintain its written telephony standards.

Any upgrading required by the Owner's written "standards" meeting the requirements of Paragraph 3(a)(4) shall be deemed to be of direct benefit to the Project.

(b) It is understood and agreed that the Developer will not pay for any Betterments and that the Owner shall not be entitled to payment therefor. No Betterment may be performed in connection with the Adjustment of the Owner Utilities which is incompatible with the Project or the Ultimate Configuration or which cannot be performed within the other constraints of applicable law, any applicable governmental approvals, including without limitation the scheduling requirements thereunder. Accordingly, the parties agree as follows *[check the one box that applies, and complete if appropriate]*:

☐ (i) The Adjustment of the Owner Utilities pursuant to the Plans does not include any Betterment.

☐ The Adjustment of the Owner Utilities pursuant to the Plans includes Betterment to the Owner Utilities by reason of *[insert explanation, e.g. "replacing 12" pipe with 24" pipe]*: _____. The Owner has provided to the Developer comparative estimates for (i) all costs for work to be performed by the Owner pursuant to this Agreement, including work attributable to the Betterment, and (ii) the cost to perform such work without the Betterment, which estimates are hereby approved by the Developer. The estimated amount of the Owner's costs for work hereunder which is attributable to Betterment is $_____, calculated by subtracting (ii) from (i). The percentage of the total cost of the Owner's work hereunder which is attributable to Betterment is _____%, calculated by subtracting (ii) from (i), which remainder shall be divided by (i).

(c) If Paragraph 10(b) identifies Betterment, then the following shall apply:

(i) If the Owner's costs are developed under procedure (3) described in Paragraph 5(b), then the Agreed Sum stated in that Paragraph includes any credits due to the Developer on account of the identified Betterment, and no further adjustment shall be made on account of same.

(ii) If the Owner's costs are developed under procedure (1) or (2) described in Paragraph 5(b), the parties agree as follows *[If Paragraph 10(b) identifies Betterment <u>and</u> the Owner's costs are developed under procedure (1) or (2), check the <u>one</u> appropriate provision]*:

☐ The estimated cost stated in Paragraph 10(b) is the agreed and final amount due for Betterment hereunder. Accordingly, each intermediate invoice submitted pursuant to Paragraph 7(b) shall include a credit for an appropriate percentage of the agreed Betterment amount, proportionate to the percentage of completion reflected in such invoice. The final invoice submitted pursuant to Paragraph 7(a) shall reflect the full amount of the agreed Betterment credit. For each invoice described in this paragraph, the credit for Betterment shall be applied before calculating the Developer's share (pursuant to Paragraph 6) of the cost of the Adjustment work. No other

adjustment (either up or down) shall be made based on actual Betterment costs.

☐ The Owner is responsible for the actual cost of the identified Betterment, determined by multiplying (a) the Betterment percentage stated in Paragraph 10(b), by (b) the actual cost of all work performed by the Owner pursuant to this Agreement (including work attributable to the Betterment), as invoiced by the Owner to the Developer. Accordingly, each invoice submitted pursuant to either Paragraph 7(a) or Paragraph 7(b) shall credit the Developer with an amount calculated by multiplying (x) the Betterment percentage stated in Paragraph 10(b), by (y) the amount billed on such invoice.

(d) The determinations and calculations of Betterment described in this Paragraph 10 shall exclude right of way acquisition costs. Betterment in connection with right-of-way acquisition is addressed in Paragraph 16.

11. **Salvage.** For any Adjustment from which the Owner recovers any materials and/or parts and retains or sells the same, after application of any applicable Betterment credit, the Developer is entitled to a credit for the salvage value of such materials and/or parts. If the Owner's costs are developed under procedure (1) or (2) described in Paragraph 5(b), then the final invoice submitted pursuant to Paragraph 7(a) shall credit the Developer with the full salvage value. If the Owner's costs are developed under procedure (3) described in Paragraph 5(b), then the Agreed Sum includes any credit due to the Developer on account of salvage.

12. **Utility Investigations.** At the Developer's request, the Owner shall assist the Developer in locating any Utilities (including appurtenances) which are owned and/or operated by Owner and may be impacted by the Project. Without limiting the generality of the foregoing, in order to help assure that neither the adjusted Owner Utilities nor existing, unadjusted utilities owned or operated by the Owner are damaged during construction of the Project, the Owner shall mark in the field the location of all such utilities horizontally on the ground in advance of Project construction in the immediate area of such utilities.

13. **Inspection and Ownership of Owner Utilities.**

(a) The Developer shall have the right, at its own expense, to inspect the Adjustment work performed by the Owner or its contractors, during and upon completion of construction. All inspections of work shall be completed and any comment provided within **five (5) business days** after request for inspection is received.

(b) The Owner shall accept full responsibility for all future repairs and maintenance of said Owner Utilities. In no event shall the Developer or TxDOT become responsible for making any repairs or maintenance, or for discharging the cost of same. The provisions of this Paragraph 13(b) shall not limit any rights which the Owner may have against the Developer if either party respectively damages any Owner Utility as a result of its respective Project activities.

14. **Design Changes.** The Developer will be responsible for additional Adjustment design and responsible for additional construction costs necessitated by design changes to the Project made after approval of the Plans, upon the terms specified herein.

15. **Field Modifications.** The Owner shall provide the Developer with documentation of any field modifications, including Utility Adjustment Field Modifications as well as minor changes as described in Paragraph 17(b), occurring in the Adjustment of the Owner Utilities.

16. **Real Property Interests.**

(a) The Owner has provided, or upon execution of this Agreement shall promptly provide to the Developer, documentation acceptable to TxDOT indicating any right, title or interest in real property claimed by the Owner with respect to the Owner Utilities in their existing location(s). Such claims are subject to TxDOT's approval as part of its review of the Developer's Utility Assembly as described in Paragraph 2. Claims approved by TxDOT as to rights or interests are referred to herein as "Existing Interests".

(b) If acquisition of any new easement or other interest in real property ("New Interest") is necessary for the Adjustment of any Owner Utilities, then the Owner shall be responsible for undertaking such acquisition. The Owner shall implement each acquisition hereunder expeditiously so that related Adjustment construction can proceed in accordance with the Developer's Project schedules. The Developer shall be responsible for its share (if any, as specified in Paragraph 6) of the actual and reasonable acquisition costs of any such New Interest (including without limitation the Owner's reasonable overhead charges and reasonable legal costs as well as compensation paid to the landowner), excluding any costs attributable to Betterment as described in Paragraph 16(c), and subject to the provisions of Paragraph 16(e); provided, however, that all acquisition costs shall be subject to the Developer's prior written approval. Eligible acquisition costs shall be segregated from other costs on the Owner's estimates and invoices. Any such New Interest shall have a written valuation and shall be acquired in accordance with applicable law.

(c) The Developer shall pay its share only for a replacement in kind of an Existing Interest (e.g., in width and type), unless a New Interest exceeding such standard (i) is required in order to accommodate the Project or by compliance with applicable law, or (ii) is called for by the Developer in the interest of overall Project economy. Any New Interest which is not the Developer's cost responsibility pursuant to the preceding sentence shall be considered a Betterment to the extent that it upgrades the Existing Interest which it replaces, or in its entirety if the related Owner Utility was not installed pursuant to an Existing Interest. Betterment costs shall be solely the Owner's responsibility.

(d) For each Existing Interest located within the final Project right of way, upon completion of the related Adjustment work and its acceptance by the Owner, the Owner agrees to execute a quitclaim deed or other appropriate documentation relinquishing such Existing Interest to TxDOT, unless the affected Owner Utility is remaining in its original location or is being reinstalled in a new location within the area subject to such Existing Interest. All quitclaim deeds or other relinquishment documents shall be subject to TxDOT's approval as part of its review of the Utility Assembly as described in Paragraph 2. For each such Existing Interest relinquished by the Owner, the Developer shall do one of the following to compensate the Owner for such Existing Interest, as appropriate:

(i) If the Owner acquires a New Interest for the affected Owner Utility, the Developer shall reimburse the Owner for the Developer's share of the Owner's actual and reasonable acquisition costs in accordance with Paragraph 16(b) and subject to Paragraph 16(c); or

(ii) If the Owner does not acquire a New Interest for the affected Owner Utility, the Developer shall compensate the Owner for the Developer's share of the fair market value of such relinquished Existing Interest, as mutually agreed between the Owner and the Developer and supported by a written valuation.

The compensation, if any, provided to the Owner pursuant to either subparagraph (i) or subparagraph (ii) above shall constitute complete compensation to the Owner for the relinquished Existing Interest and any New Interest, and no further compensation shall be due to the Owner from the Developer or TxDOT on account of such Existing Interest or New Interest(s).

(e) The Owner shall execute a Utility Joint Use Acknowledgment (TxDOT-U-80A) for each Adjustment where required pursuant to TxDOT policies. All Utility Joint Use Acknowledgments shall be subject to TxDOT approval as part of its review of the Utility Assembly as described in Paragraph 2.

17. **Amendments and Modifications.** This Agreement may be amended or modified only by a written instrument executed by the parties hereto, in accordance with Paragraph 17(a) or Paragraph 17(b) below.

(a) Except as otherwise provided in Paragraph 17(b), any amendment or modification to this Agreement or the Plans attached hereto shall be implemented by a Utility Adjustment Agreement Amendment ("UAAA") in the form of Exhibit B hereto (TxDOT-CDA-U-35A-OM). The UAAA form can be used for a new scope of work with concurrence of the Developer and TxDOT as long as the Design and Construction responsibilities have not changed. Each UAAA is subject to the review and approval of TxDOT, prior to its becoming effective for any purpose and prior to any work being initiated thereunder. The Owner agrees to keep and track costs for each UAAA separately from other work being performed.

(b) For purposes of this Paragraph 17(b), "Utility Adjustment Field Modification" shall mean any horizontal or vertical design change from the Plans included in a Utility Assembly previously approved by TxDOT, due either to design of the Project or to conditions not accurately reflected in the approved Utility Assembly (e.g., shifting the alignment of an 8 in. water line to miss a modified or new roadway drainage structure). A Utility Adjustment Field Modification agreed upon by the Developer and the Owner does not require a UAAA, provided that the modified Plans have been submitted to TxDOT for its review and comment. A minor change (e.g., an additional water valve, an added Utility marker at a ROW line, a change in vertical bend, etc.) will not be considered a Utility Adjustment Field Modification and will not require a UAAA, but shall be shown in the documentation required pursuant to Paragraph 15.

18. **Entire Agreement.** This Agreement embodies the entire agreement between the parties and there are no oral or written agreements between the parties or any representations made which are not expressly set forth herein.

19. **Assignment; Binding Effect; TxDOT as Third Party Beneficiary.** The Owner and the Developer may not assign any of its rights or delegate any of its duties under this Agreement without the prior written consent of the other parties and of TxDOT, which consent may not be unreasonably withheld or delayed; provided, however, that the Developer may assign any of its rights and/or delegate any of its duties to TxDOT or to any other entity with which TxDOT contracts to fulfill the Developer's obligations at any time without the prior consent of the Owner.

This Agreement shall bind the Owner, the Developer and their successors and permitted assigns, and nothing in this Agreement nor in any approval subsequently provided by any party hereto shall be construed as giving any benefits, rights, remedies, or claims to any other person, firm, corporation or other entity, including, without limitation, any contractor or other party retained for the Adjustment work or the public in general; provided, however, that the Owner and the

Developer agree that although TxDOT is not a party to this Agreement, TxDOT is intended to be a third-party beneficiary to this Agreement.

20. **Breach by the Parties.**

(a) If the Owner claims that the Developer has breached any of its obligations under this Agreement, the Owner will notify the Developer and TxDOT in writing of such breach, and the Developer shall have 30 days following receipt of such notice in which to cure such breach, before the Owner may invoke any remedies which may be available to it as a result of such breach; provided, however, that both during and after such period TxDOT shall have the right, but not the obligation, to cure any breach by the Developer. Without limiting the generality of the foregoing, (a) TxDOT shall have no liability to the Owner for any act or omission committed by the Developer in connection with this Agreement, and (b) in no event shall TxDOT be responsible for any repairs or maintenance to the Owner Utilities adjusted pursuant to this Agreement.

(b) If the Developer claims that the Owner has breached any of its obligations under this Agreement, the Developer will notify the Owner and TxDOT in writing of such breach, and the Owner shall have 30 days following receipt of such notice in which to cure such breach, before the Developer or the Developer may invoke any remedies which may be available to it as a result of such breach.

21. **Traffic Control.** The Developer shall provide traffic control or shall reimburse the Owner for the Developer's share (if any, as specified in Paragraph 6) of the costs for traffic control made necessary by the Adjustment work performed by either the Developer or the Owner pursuant to this Agreement, in compliance with the requirements of the Texas Manual on Uniform Traffic Control Devices. Betterment percentages calculated in Paragraph 10 shall also apply to the traffic control costs.

22. **Notices.** Except as otherwise expressly provided in this Agreement, all notices or communications pursuant to this Agreement shall be sent or delivered to the following:

The Owner:

Phone:
Fax:

The Developer:

Phone:
Fax:

A party sending a notice of default of this Agreement to another party shall also send a copy of such notice to TxDOT and to the CDA Utility Manager at the following addresses:

TxDOT: TxDOT Department of Transportation
Attention: Donald C. Toner, Jr., SR/WA
125 E. 11th Street
Austin, Texas 78701-2483
Phone: (512) 936-0980

CDA Utility Manager

Any notice or demand required herein shall be given (a) personally, (b) by certified or registered mail, postage prepaid, return receipt requested, or (c) by reliable messenger or overnight courier to the appropriate address set forth above. Any notice served personally shall be deemed delivered upon receipt and served by certified or registered mail or by reliable messenger or overnight courier shall be deemed delivered on the date of receipt as shown on the addressee's registry or certification of receipt or on the date receipt is refused as shown on the records or manifest of the U.S. Postal Service or such courier. Any party may from time to time designate any other address for this purpose by written notice to all other parties; TxDOT may designate another address by written notice to all parties.

23. **Approvals.** Any acceptance, approval, or any other like action (collectively "Approval") required or permitted to be given by either the Developer or the Owner pursuant to this Agreement:

(a) Must be in writing to be effective (except if deemed granted pursuant hereto),

(b) Shall not be unreasonably withheld or delayed; and if Approval is withheld, such withholding shall be in writing and shall state with specificity the reason for withholding such Approval, and every effort shall be made to identify with as much detail as possible what changes are required for Approval, and

(c) Except for approvals by TxDOT, and except as may be specifically provided otherwise in this Agreement, shall be deemed granted if no response is provided to the party requesting an Approval within the time period prescribed by this Agreement (or if no time period is prescribed, then fourteen (14) calendar days), commencing upon actual receipt by the party from which an Approval is requested or required, of a request for Approval from the requesting party. All requests for Approval shall be sent out by the requesting party to the other party in accordance with Paragraph 22.

24. **Time; Force Majeure.**

(a) Time is of the essence in the performance of this Agreement.

(b) All references to “days” herein shall be construed to refer to calendar days, unless otherwise stated.

(c) No party shall be liable to another party for any delay in performance under this Agreement from any cause beyond its control and without its fault or negligence (“Force Majeure”), such as acts of God, acts of civil or military authority, fire, earthquake, strike, unusually severe weather, floods or power blackouts. If any such event of Force Majeure occurs, the Owner agrees, if requested by the Developer, to accelerate its efforts hereunder if reasonably feasible in order to regain lost time, so long as the Developer agrees to reimburse the Owner for the reasonable and actual costs of such efforts.

25. **Continuing Performance.** In the event of a dispute, the Owner and the Developer agree to continue their respective performance hereunder to the extent feasible in light of the dispute, including paying billings, and such continuation of efforts and payment of billings shall not be construed as a waiver of any legal right.

26. **Equitable Relief**. The Developer and the Owner acknowledge and agree that delays in Adjustment of the Owner Utilities will impact the public convenience, safety and welfare, and that (without limiting the parties' remedies hereunder) monetary damages would be inadequate to compensate for delays in the construction of the Project. Consequently, the parties hereto (and TxDOT as well, as a third party beneficiary) shall be entitled to specific performance or other equitable relief in the event of any breach of this Agreement which threatens to delay construction of the Project; provided, however, that the fact that specific performance or other equitable relief may be granted shall not prejudice any claims for payment or otherwise related to performance of the Adjustment work hereunder.

27. **Authority.** The Owner and the Developer each represent and warrant to the other party that the warranting party possesses the legal authority to enter into this Agreement and that it has taken all actions necessary to exercise that authority and to lawfully authorize its undersigned signatory to execute this Agreement and to bind such party to its terms. Each person executing this Agreement on behalf of a party warrants that he or she is duly authorized to enter into this Agreement on behalf of such party and to bind it to the terms hereof.

28. **Cooperation.** The parties acknowledge that the timely completion of the Project will be influenced by the ability of the Owner (and its contractors) and the Developer to coordinate their activities, communicate with each other, and respond promptly to reasonable requests. Subject to the terms and conditions of this Agreement, the Owner and the Developer agree to take all steps reasonably required to coordinate their respective duties hereunder in a manner consistent with the Developer's current and future construction schedules for the Project. The Owner further agrees to require its contractors to coordinate their respective work hereunder with the Developer.

29. **Termination.** If the Project is canceled or modified so as to eliminate the necessity of the Adjustment work described herein, then the Developer shall notify the Owner in writing and the Developer reserves the right to thereupon terminate this Agreement. Upon such termination, the parties shall negotiate in good faith an amendment that shall provide mutually acceptable terms and conditions for handling the respective rights and liabilities of the parties relating to such termination.

30. **Nondiscrimination**. Each party hereto agrees, with respect to the work performed by such party pursuant to this Agreement, that such party shall not discriminate on the grounds of race, color, sex, national origin or disability in the selection and/or retention of contractors and consultants, including procurement of materials and leases of equipment.

31. **Applicable Law, Jurisdiction and Venue**. This Agreement shall be governed by the laws of the State of Texas, without regard to the conflict of laws principles thereof. Venue for any action brought to enforce this Agreement or relating to the relationship between any of the parties shall be the District Court of Travis County, Texas or the United States District Court for the Western District of Texas (Austin).

32. **Waiver of Consequential Damages**. No party hereto shall be liable to any other party to this Agreement, whether in contract, tort, equity, or otherwise (including negligence, warranty, indemnity, strict liability, or otherwise), for any punitive, exemplary, special, indirect, incidental, or consequential damages, including, without limitation, loss of profits or revenues, loss of use, claims of customers, or loss of business opportunity.

33. **Captions**. The captions and headings of the various paragraphs of this Agreement are for convenience and identification only, and shall not be deemed to limit or define the content of their respective paragraphs.

34. **Counterparts.** This Agreement may be executed in any number of counterparts. Each such counterpart hereof shall be deemed to be an original instrument but all such counterparts together shall constitute one and the same instrument.

35. **Effective Date.** This Agreement shall become effective upon the later of (a) the date of signing by the last party (either the Owner or the Developer) signing this Agreement, and (b) the date of TxDOT's approval as indicated by the signature of TxDOT's representative, below.

APPROVED BY:
TEXAS DEPARTMENT OF TRANSPORTATION

By: _____
Authorized Signature

Printed
Name: Donald C. Toner, Jr., SR/WA

Date: _____

OWNER

_____
[Print Owner Name]

By: _____
Duly Authorized Representative

Printed
Name: _____

Title: _____

Date: _____

DEVELOPER

By: _____
Duly Authorized Representative

Printed
Name: _____

Title: _____

Date: _____

County:
ROW CSJ No.:

Const. CSJ No.:

Highway:
Limits:
Fed. Proj. No.:

EXHIBIT A

PLANS, SPECIFICATIONS, COST ESTIMATES AND ALLOCATION

County:
ROW CSJ No.:

Const. CSJ No.:

Highway:
Limits:
Fed. Proj. No.:

EXHIBIT B

UTILITY ADJUSTMENT AGREEMENT AMENDMENT
(TxDOT-CDA-U-35A-OM)

County:
ROW CSJ No.:

Const. CSJ No.:

Highway:
Limits:
Fed. Proj. No.:

EXHIBIT C

STATEMENT COVERING CONTRACT WORK
(TxDOT-U-48)

County:
Highway:
Limits:
Fed. Proj. No.:
ROW CSJ No.:
Const. CSJ No.:

UTILITY ADJUSTMENT AGREEMENT AMENDMENT (Developer Managed)

(Amendment No. to Agreement No.: -U-_____)

THIS AMENDMENT TO PROJECT UTILITY ADJUSTMENT AGREEMENT (this "Amendment"), by and between , hereinafter identified as the "**Developer**", and _____, hereinafter identified as the "**Owner**", is as follows:

WITNESSETH

WHEREAS, the STATE of TEXAS, acting by and through the Texas Department of Transportation, hereinafter identified as "TxDOT", proposes to construct the toll project identified above (the "Project", as more particularly described in the "Original Agreement", defined below); and

WHEREAS, pursuant to that certain Comprehensive Development Agreement ("CDA") by and between TxDOT and the Developer with respect to the Project, the Developer has undertaken the obligation to design, construct, and potentially maintain the Project, including causing the removal, relocation, or other necessary adjustment of existing utilities impacted by the Project (collectively, "Adjustment"); and

WHEREAS, the Owner and Developer are parties to that certain executed Project Utility Adjustment Agreement designated by the "Agreement No." indicated above, as amended by previous amendments, if any (the "Original Agreement"), which provides for the adjustment of certain utilities owned and/or operated by the Owner (the "Utilities"); and

WHEREAS, the parties are required to utilize this Amendment form in order to modify the Original Agreement to add the adjustment of Owner facilities not covered by the Original Agreement; and

WHEREAS, the parties desire to amend the Original Agreement to add additional Owner utility facility(ies), on the terms and conditions hereinafter set forth.

NOW, THEREFORE, in consideration of the agreements contained herein, the parties hereto agree as follows:

1. **Amendment.** The Original Agreement is hereby amended as follows:

1.1 **Plans.**

(a) The description of the Owner Utilities and the proposed Adjustment of the Owner Utilities in the Original Agreement is hereby amended to add the following utility facility(ies) ("Additional Owner Utilities") and proposed Adjustment(s) to the Owner Utilities described in the Original Agreement *[insert below a description of the affected facilities (by type, size and location) as well as a brief description of the nature of the Adjustment work to be performed (e.g., "adjust 12" waterline from approximately Highway Station 100+00 to approximately Highway Station 200+00)];* and

(b) The Plans, as defined in Paragraph 1 of the Original Agreement, are hereby amended to add thereto the plans, specifications and cost estimates attached hereto as Exhibit A.

(c) The Plans attached hereto as Exhibit A, along with this Amendment, shall be submitted upon execution to TxDOT in accordance with Paragraph 2 of the Original Agreement, and Paragraph 2 shall apply to this Amendment and the Plans attached hereto in the same manner as if this Amendment were the Original Agreement. If the Owner claims an Existing Interest for any of the Additional Owner Utilities, documentation with respect to such claim shall be submitted to TxDOT as part of this Amendment and the attached Plans, in accordance with Paragraph 15(a) of the Original Agreement.

1.2 **Reimbursement of Owner's Indirect Costs.** For purposes of Paragraph 6 of the Original Agreement, the following terms apply to the Additional Owner Utilities and proposed Adjustment:

(a) Developer agrees to reimburse the Owner its share of the Owner's indirect costs (e.g., engineering, inspection, testing, ROW) as identified in Exhibit A. When requested by the Owner, monthly progress payments will be made. The monthly payment will not exceed 80% of the estimated indirect work done to date. Once the indirect work is complete, final payment of the eligible indirect costs will be made. Intermediate payments shall not be construed as final payment for any items included in the intermediate payment.

(b) The Owner's indirect costs associated with Adjustment of the Owner Utilities shall be developed pursuant to the method checked and described below *[check only one box]*:

☐ (1) Actual related indirect costs accumulated in accordance with (i) a work order accounting procedure prescribed by the applicable Federal or State regulatory body, or (ii) established accounting procedure developed by the Owner and which the Owner uses in its regular operations (either (i) or (ii) referred to as "Actual Cost") or,

☐ (2) The agreed sum of $_____ ("Agreed Sum") as supported by the analysis of the Owner's estimated costs attached hereto as part of Exhibit A.

1.3 **Advancement of Funds by Owner for Construction Costs.**

(a) Advancement of Owner's Share, if any, of Estimated Costs

Exhibit A shall identify all estimated engineering and construction-related costs, including labor, material, equipment and other miscellaneous construction items. Exhibit A shall also identify the Owner's and Developer's respective shares of the estimated costs.

The Owner shall advance to the Developer its allocated share, if any, of the estimated costs for construction and engineering work to be performed by Developer, in accordance with the following terms:

☐ The adjustment of the Owner's Utilities does not require advancement of funds.

☐ The adjustment of the Owner's Utilities does require advancement of funds and the terms agreed to between the Developer and Owner are listed below.

[Insert terms of advance funding to be agreed between Developer and Owner.]

(b) Adjustment Based on Actual Costs or Agreed Sum

[Check the <u>one</u> appropriate provision, if advancement of funds is required]:

☐ The Owner is responsible for its share of the Developer actual cost for the Adjustment, including the identified Betterment. Accordingly, upon completion of all Adjustment work to be performed by both parties pursuant to this Amendment, (i) the Owner shall pay to the Developer the amount, if any, by which the actual cost of the Betterment (as determined in Paragraph 9(b)) plus the actual cost of Owner's share of the Adjustment (based on the allocation set forth in Exhibit A) exceeds the estimated cost advanced by the Owner, or (ii) the Developer shall refund to the Owner the amount, if any, by which such advance exceeds such actual cost, as applicable.

☐ The Agreed Sum is the agreed and final amount due for the Adjustment, including any Betterment, under this Amendment. Accordingly, no adjustment (either up or down) of such amount shall be made based on actual costs.

1.4 **<u>Reimbursement of Owner's Indirect Costs</u>.** For purposes of Paragraph 6 of the Original Agreement, the following terms apply to the Additional Owner Utilities and proposed Adjustment:

(a) Developer agrees to reimburse the Owner its share of the Owner's indirect costs (e.g., engineering, inspection, testing, ROW) as identified in Exhibit A. When requested by the Owner, monthly progress payments will be made. The monthly payment will not exceed 80% of the estimated indirect work done to date. Once the indirect work is complete, final payment of the eligible indirect costs will be made. Intermediate payments shall not be construed as final payment for any items included in the intermediate payment.

(b) The Owner's indirect costs associated with Adjustment of the Owner Utilities shall be developed pursuant to the method checked and described below *[check only one box]*:

☐ (1) Actual related indirect costs accumulated in accordance with (i) a work order accounting procedure prescribed by the applicable Federal or State regulatory body, or (ii) established accounting procedure developed by the Owner and which the Owner uses in its regular operations (either (i) or (ii) referred to as "Actual Cost") or,

☐ (2) The agreed sum of $_____ ("Agreed Sum") as supported by the analysis of the Owner's estimated costs attached hereto as part of Exhibit A.

1.5 **Responsibility for Costs of Adjustment Work.** For purposes of Paragraph 4 of the Original Agreement, responsibility for the Agreed Sum or Actual Cost, as applicable, of all Adjustment work to be performed pursuant to this Amendment shall be allocated between the Developer and the Owner as identified in Exhibit A hereto and in accordance with §203.092, Texas Transportation Code. An allocation percentage may be determined by application of an Eligibility Ratio, if appropriate, as detailed in Exhibit A, provided however, that any portion of an Agreed Sum or Actual Cost attributable to Betterment shall be allocated 100% to the Owner in accordance with Paragraph 9 of the Original Agreement.

1.6 **Betterment.**

(a) Paragraph 9(b) (Betterment and Salvage) of the Original Agreement is hereby amended to add the following *[Check the one box that applies, and complete if appropriate]*:

☐ The Adjustment of the Additional Owner Utilities, pursuant to the Plans as amended herein, does not include any Betterment.

☐ The Adjustment of the Additional Owner Utilities, pursuant to the Plans as amended herein, includes Betterment to the Additional Owner Utilities by reason of *[insert explanation, e.g. "replacing 12" pipe with 24" pipe]*: _____. The Developer has provided to the Owner comparative estimates for (i) all work to be performed by the Developer pursuant to this Amendment, including work attributable to the Betterment, and (ii) the cost to perform such work without the Betterment, which estimates are hereby approved by the Owner. The estimated cost of the Developer work under this Amendment which is attributable to Betterment is $_____, calculated by subtracting (ii) from (i). The percentage of the total cost of the Developer work under this Amendment which is attributable to Betterment is _____ %, calculated by subtracting (ii) from (i), which remainder is divided by (i).

(b) If the above Paragraph 1.6(a) identifies Betterment, the Owner shall advance to the Developer, at least **fourteen (14) days** prior to the date scheduled for commencement of construction for Adjustment of the Additional Owner Utilities, the estimated cost attributable to Betterment as set forth in Paragraph 1.6(a) of this Amendment. If the Owner fails to advance payment to the Developer on or before the foregoing deadline, the Developer shall have the option of commencing and completing (without delay) the Adjustment work without installation of the applicable Betterment. *[Check the <u>one</u> appropriate provision]*:

☐ The estimated cost stated in Paragraph 1.6(a) of this Amendment is the agreed and final amount due for Betterment under this Amendment, and accordingly no adjustment (either up or down) of such amount shall be made based on actual costs.

☐ The Owner is responsible for the Developer Actual Cost for the identified Betterment. Accordingly, upon completion of all Adjustment work to be performed by both parties pursuant to this Amendment, (i) the Owner shall pay to the Developer the amount, if any, by which the actual cost of the Betterment (determined as provided below in this paragraph) exceeds the estimated cost

advanced by the Owner, or (ii) the Developer shall refund to the Owner the amount, if any, by which such advance exceeds such actual cost, as applicable. Any additional payment by the Owner shall be due within **sixty (60) days** after the Owner's receipt of the Developers invoice therefor, together with supporting documentation; any refund shall be due within **sixty (60) days** after completion of the Adjustment work under this Amendment. The Actual Cost of Betterment incurred by the Developer shall be calculated by multiplying (i) the Betterment percentage stated in Paragraph 1.6(a) of this Amendment, by (ii) the Actual Cost of all work performed by the Developer pursuant to this Amendment (including work attributable to the Betterment), as invoiced by the Developer to the Owner.

(c) The determinations and calculations of Betterment described in this Amendment shall exclude right-of-way acquisition costs. Betterment in connection with right-of-way acquisition is addressed in Paragraph 15 of the Original Agreement.

1.7 **Miscellaneous.**

(a) Owner and Developer agree to refer to this Amendment, designated by the "Amendment No." and "Agreement Number" indicated on page 1 above, on all future correspondence regarding the Adjustment work that is the subject of this Amendment and to track separately all costs relating to this Amendment and the Adjustment work described herein.

(b) [*Include any other proposed amendments allowed by applicable law.*]

2. **General.**

(a) All capitalized terms used in this Amendment shall have the meanings assigned to them in the Original Agreement, except as otherwise stated herein.

(b) This Amendment may be executed in any number of counterparts. Each such counterpart hereof shall be deemed to be an original instrument but all such counterparts together shall constitute one and the same instrument.

(c) Except as amended hereby, the Original Agreement shall remain in full force and effect. In no event shall the responsibility, as between the Owner and the Developer, for the preparation of the Plans and the Adjustment of the Owner Utilities be deemed to be amended hereby.

(d) This Amendment shall become effective upon the later of (a) the date of signing by the last party (either the Owner or the Developer) signing this Amendment, and (b) the completion of TxDOT's review and approval as indicated by the signature of TxDOT's representative, below.

APPROVED BY:

TEXAS DEPARTMENT OF TRANSPORTATION

By: _____
Authorized Signature

Printed Name: _____

Title: _____

Date: _____

OWNER

_____
[Print Owner Name]

By: _____
Duly Authorized Representative

Printed Name: _____

Title: _____

Date: _____

DEVELOPER

By: _____
Duly Authorized Representative

Printed Name: _____

Title: _____

Date: _____

County:
Highway:
Limits:
Fed. Proj. No.:
ROW CSJ No.:

Const. No.: **UTILITY ADJUSTMENT AGREEMENT AMENDMENT (Owner Managed)**

(Amendment No. to Agreement No.: -U-)

THIS AMENDMENT TO PROJECT UTILITY ADJUSTMENT AGREEMENT (this "Amendment"), by and between, hereinafter identified as the "**Developer**", and _____, hereinafter identified as the "**Owner**", is as follows:

WITNESSETH

WHEREAS, the STATE of TEXAS, acting by and through the Texas Department of Transportation, hereinafter identified as "TxDOT", proposes to construct the toll project identified above (the "Project", as more particularly described in the "Original Agreement", defined below); and

WHEREAS, pursuant to that certain Comprehensive Development Agreement ("CDA") by and between TxDOT and the Developer with respect to the Project, the Developer has undertaken the obligation to design, construct, and potentially maintain the Project, including causing the removal, relocation, or other necessary adjustment of existing utilities impacted by the Project (collectively, "Adjustment"); and

WHEREAS, the Owner and Developer are parties to that certain executed Project Utility Adjustment Agreement designated by the "Agreement No." indicated above, as amended by previous amendments, if any (the "Original Agreement"), which provides for the adjustment of certain utilities owned and/or operated by the Owner (the "Utilities"); and

WHEREAS, the parties are required to utilize this Amendment form in order to modify the Original Agreement to add the adjustment of Owner utilities facilities not covered by the Original Agreement; and

WHEREAS, the parties desire to amend the Original Agreement to add additional Owner utility facility(ies), on the terms and conditions hereinafter set forth.

NOW, THEREFORE, in consideration of the agreements contained herein, the parties hereto agree as follows:

1. **Amendment.** The Original Agreement is hereby amended as follows:

   (a) The description of the Owner Utilities and the proposed Adjustment of the Owner Utilities in the Original Agreement is hereby amended to add the following facility(ies) ("Additional Owner Utilities") and proposed Adjustment(s) *[insert below a description of the affected facilities (by type, size and location) as well as a brief description of the nature of the Adjustment work to be performed (e.g., "adjust 12" waterline from approximately Highway Station 100+00 to approximately Highway Station 200+00")]*:

(b) The Plans, as defined in Paragraph 1 of the Original Agreement, are hereby amended to add thereto the plans, specifications and cost estimates attached hereto as Exhibit A.

(c) The Plans attached hereto as Exhibit A, along with this Amendment, shall be submitted upon execution to TxDOT in accordance with Paragraph 2 of the Original Agreement, and Paragraph 2 shall apply to this Amendment and the Plans attached hereto in the same manner as if this Amendment were the Original Agreement. If the Owner claims an Existing Interest for any of the Additional Owner Utilities, documentation with respect to such claim shall be submitted to TxDOT as part of this Amendment and the attached Plans, in accordance with Paragraph 16(a) of the Original Agreement.

(d) Paragraph 4(f) of the Original Agreement is hereby amended to add the following deadline for the Adjustment of the Additional Owner Utilities *[check one box that applies]*:

☐ Owner shall complete all of the utility reconstruction and relocation work, including final testing and acceptance thereof, on or before _____, 20_____.

☐ Owner shall complete all of the utility reconstruction and relocation work, including final testing and acceptance thereof, within _____ calendar days after delivery to Owner of a notice to proceed by Developer.

(e) For purposes of Paragraph 5(b) of the Original Agreement, the Owner's costs associated with Adjustment of the Additional Owner Utilities shall be developed pursuant to the method checked and described below, *[check only one box]*:

☐ (1) Actual costs accumulated in accordance with a work order accounting procedure prescribed by the applicable Federal or State regulatory body ("Actual Cost"); or

☐ (2) Actual costs accumulated in accordance with an established accounting procedure developed by the Owner and which the Owner uses in its regular operations ("Actual Cost"); or

☐ (3) The agreed sum of $_____("Agreed Sum"), as supported by the analysis of estimated costs attached hereto as part of Exhibit A

(f) For purposes of Paragraph 6 of the Original Agreement, responsibility for the Agreed Sum or Actual Cost, as applicable, of all Adjustment work to be performed pursuant to this Amendment shall be allocated between the Developer and the Owner as identified in Exhibit A and in accordance with §203.092 of the Texas Transportation Code. An allocation percentage may be determined by application of an Eligibility Ratio, if appropriate, as detailed in Exhibit A; provided, however, that any portion of an Agreed Sum or Actual Cost attributable to Betterment shall be allocated 100% to the Owner in accordance with Paragraph 10 of the Original Agreement.

(g) Paragraph 10(b) of the Original Agreement is hereby amended to add the following *[Check the one box that applies]*:

☐ The Adjustment of the Additional Owner Utilities, pursuant to the Plans as amended herein, does not include any Betterment.

☐ The Adjustment of the Additional Owner Utilities, pursuant to the Plans as amended herein, includes Betterment to the Additional Owner Utilities by reason of *[insert explanation, e.g. "replacing 12" pipe with 24" pipe]*: _____. The Owner has provided to the Developer comparative estimates for (i) all costs for work to be performed by the Owner pursuant to this Amendment, including work attributable to the Betterment, and (ii) the cost to perform such work without the Betterment, which estimates are hereby approved by the Developer. The estimated amount of the Owner's costs for work under this Agreement which is attributable to Betterment is $_____, calculated by subtracting (ii) from (i). The percentage of the total cost of the Owner's work hereunder which is attributable to Betterment is _____%, calculated by subtracting (ii) from (i) which remainder shall be divided by (i).

(h) The following shall apply to any Betterment described in Paragraph 1(g) of this Amendment:

(i) If the Owner's costs are developed under procedure (3) described in Paragraph 1(e) of this Amendment, then the agreed sum stated in that Paragraph includes any credits due to the Developer on account of the identified Betterment, and no further adjustment shall be made on account of same.

(ii) If the Owner's costs are developed under procedure (1) or (2) described in Paragraph 1(e) of this Amendment, the parties agree as follows *[check the <u>one</u> appropriate provision]*:

☐ The estimated cost stated in Paragraph 1(g) of this Amendment is the agreed and final amount due for Betterment under this Amendment. Accordingly, each intermediate invoice submitted for Adjustment(s) of the Additional Owner Utilities pursuant to Paragraph 7(b) of the Original Agreement shall credit the Developer with an appropriate amount of the agreed Betterment amount, proportionate to the percentage of completion reflected in such invoice. The final invoice submitted for Adjustment(s) of the Additional Owner Utilities pursuant to Paragraph 7(a) of the Original Agreement shall reflect the full amount of the agreed Betterment credit. For each invoice described in this paragraph, the credit for Betterment shall be applied before calculating the Developer's share (pursuant to Paragraph 1(e) of this Amendment) of the cost of the Adjustment work. No other adjustment (either up or down) shall be made based on actual Betterment costs.

☐ The Owner is responsible for the actual cost of the identified Betterment, determined by multiplying (a) the Betterment percentage stated in Paragraph 1(g) of this Amendment, by (b) the actual cost of all work performed by the Owner pursuant to this Amendment (including work attributable to the Betterment), as invoiced by the Owner to the Developer. Accordingly, each invoice submitted for Adjustment of the Additional Owner Utilities pursuant to either Paragraph 7(a) or Paragraph 7(b) of the Original Agreement shall credit the Developer with an amount calculated by multiplying (x) the Betterment percentage stated in Paragraph 1(g) of this Amendment, by (y) the amount billed on such invoice.

(i) The determinations and calculations of Betterment described in this Amendment shall exclude right-of-way acquisition costs. Betterment in connection with right-of-way acquisition is addressed in Paragraph 16 of the Original Agreement.

(j) Owner and the Developer agree to refer to this Amendment, designated by the "Amendment No." and "Agreement number" indicated on page 1 above, on all future correspondence regarding the Adjustment work that is the subject of this Amendment and to track separately all costs relating to this Amendment and the Adjustment work described herein.

(k) [*Include any other proposed amendments in compliance with the applicable law*.]

2. **General.**

(a) All capitalized terms used in this Amendment shall have the meanings assigned to them in the Original Agreement, except as otherwise stated herein.

(b) This Amendment may be executed in any number of counterparts. Each such counterpart hereof shall be deemed to be an original instrument but all such counterparts together shall constitute one and the same instrument.

(c) Except as amended hereby, the Original Agreement shall remain in full force and effect. In no event shall the responsibility, as between the Owner and the Developer, for the preparation of the Plans and the Adjustment of the Owner Utilities be deemed to be amended hereby.

(d) This Amendment shall become effective upon the later of (a) the date of signing by the last party (either the Owner or the Developer) signing this Amendment, and (b) the completion of TxDOT's review and approval as indicated by the signature of TxDOT's representative, below.

APPROVED BY:

TEXAS DEPARTMENT OF TRANSPORTATION

By: _____
Authorized Signature

Printed Name: _____

Date: _____

OWNER

_____
[Print Owner Name]

By: _____
Duly Authorized Representative

Printed Name: _____

Title: _____

Date: _____

DEVELOPER

By: _____
Duly Authorized Representative

Printed Name: _____

Title: _____

Date: _____

Texas Department of Transportation
Book 2 - Technical Provisions

IH 35E Managed Lanes Project

Attachment 8-1

ESALs and Traffic Data

IH 35E Managed Lanes Project
ESALs and Traffic Data

Frontage Roads - 20 yrs

Location	Average Daily Traffic 2012	Average Daily Traffic 2032	Base Year Percent Truck ADT	Base Year Percent Truck DHV	ATHWLD	% Tandem Axles in ATHWLD	Total # of 18K ESAL Applications in One Direction Expected for a 20 Year Period (2012 to 2032) Flexible Pavement	S N	Rigid Pavement	SLAB
I-35E Frontage Roads Only Section 1										
From I-635 to Belt Line Road	43,600	58,100	8.8	6.6	17,500	40	13,197,000	3	17,052,000	8"
									17,500,000	10"
									17,719,000	12"
Dallas County										

Data for Use in Air & Noise Analysis

Vehicle Class	Base Year % of ADT	Base Year % of DHV
Light Duty	91.2	93.4
Medium Duty	2.3	1.7
Heavy Duty	6.5	4.9

Frontage Roads - 30 yrs

Location	Average Daily Traffic 2012	Average Daily Traffic 2042	Base Year Percent Truck ADT	Base Year Percent Truck DHV	ATHWLD	% Tandem Axles in ATHWLD	Total # of 18K ESAL Applications in One Direction Expected for a 30 Year Period (2012 to 2042) Flexible Pavement	S N	Rigid Pavement	SLAB
I-35E Frontage Roads Only Section 1										
From I-635 to Belt Line Road	43,600	65,100	8.8	6.6	17,600	40	21,158,000	3	27,339,000	8"
									28,057,000	10"
									28,409,000	12"
Dallas County										

Note: Average Daily Traffic values are bi-directional

IH 35E Managed Lanes Project
ESALs and Traffic Data

Frontage Roads - 20 yrs

Location	Average Daily Traffic 2012	Average Daily Traffic 2032	Base Year Percent Truck ADT	Base Year Percent Truck DHV	ATHWLD	% Tandem Axles in ATHWLD	Total # of 18K ESAL Applications in One Direction Expected for a 20 Year Period (2012 to 2032) Flexible Pavement	SN	Rigid Pavement	SLAB
I-35E Frontage Roads Only Section 2										
From Belt Line Road to US 377	68,200	90,900	5	3.8	17,300	40	11,808,000	3	15,208,000	8"
									15,607,000	10"
									15,802,000	12"
Dallas County										

Data for Use in Air & Noise Analysis

Vehicle Class	Base Year % of ADT	Base Year % of DHV
Light Duty	95	96.2
Medium Duty	1.3	1
Heavy Duty	3.7	2.8

Frontage Roads - 30 yrs

Location	Average Daily Traffic 2012	Average Daily Traffic 2042	Base Year Percent Truck ADT	Base Year Percent Truck DHV	ATHWLD	% Tandem Axles in ATHWLD	Total # of 18K ESAL Applications in One Direction Expected for a 30 Year Period (2012 to 2042) Flexible Pavement	SN	Rigid Pavement	SLAB
I-35E Frontage Roads Only Section 2										
From Belt Line Road to US 377	68,200	101,900	5	3.8	17,400	40	18,937,000	3	24,390,000	8"
									25,029,000	10"
									25,341,000	12"
Dallas County										

Note: Average Daily Traffic values are bi-directional

IH 35E Managed Lanes Project
ESALs and Traffic Data

Frontage Roads - 20 yrs

Location	Average Daily Traffic 2012	Average Daily Traffic 2032	Base Year Percent Truck ADT	Base Year Percent Truck DHV	ATHWLD	% Tandem Axles in ATHWLD	Total # of 18K ESAL Applications in One Direction Expected for a 20 Year Period (2012 to 2032) Flexible Pavement	SN	Rigid Pavement	SLAB
I-35E Frontage Roads Only Section 3										
From US 377 to US 380	43,600	58,100	5.6	4.2	16,700	50	8,440,000	3	10,879,000	8"
									11,164,000	10"
									11,304,000	12"
Dallas County										

Data for Use in Air & Noise Analysis

Vehicle Class	Base Year % of ADT	Base Year % of DHV
Light Duty	94.4	95.8
Medium Duty	1.4	1.1
Heavy Duty	4.2	3.1

Frontage Roads - 30 yrs

Location	Average Daily Traffic 2012	Average Daily Traffic 2042	Base Year Percent Truck ADT	Base Year Percent Truck DHV	ATHWLD	% Tandem Axles in ATHWLD	Total # of 18K ESAL Applications in One Direction Expected for a 30 Year Period (2012 to 2042) Flexible Pavement	SN	Rigid Pavement	SLAB
I-35E Frontage Roads Only Section 3										
From US 377 to US 380	43,600	65,100	5.6	4.2	16,800	50	13,532,000	3	17,442,000	8"
									17,900,000	10"
									18,123,000	12"
Dallas County										

Note: Average Daily Traffic values are bi-directional

IH 35E Managed Lanes Project
ESALs and Traffic Data

Mainlane Roads - 20 yrs

Location	Average Daily Traffic 2010	Average Daily Traffic 2030	Base Year Percent Truck ADT	Base Year Percent Truck DHV	ATHWLD	% Tandem Axles in ATHWLD	Total # of 18K ESAL Applications in One Direction Expected for a 20 Year Period (2010 to 2030) Flexible Pavement	SN	Rigid Pavement	SLAB
I-35E Mainlanes Only Section 1 From I-635 to Belt Line Road Dallas County	245,800	338,400	5.9	2.7	16,500	30	61,219,000	3	84,456,000 86,324,000 86,985,000	8" 10" 12"

Data for Use in Air & Noise Analysis

Vehicle Class	Base Year % of ADT	Base Year % of DHV
Light Duty	94.1	97.3
Medium Duty	1.7	0.8
Heavy Duty	4.2	1.9

Mainlane Roads - 30 yrs

Location	Average Daily Traffic 2010	Average Daily Traffic 2040	Base Year Percent Truck ADT	Base Year Percent Truck DHV	ATHWLD	% Tandem Axles in ATHWLD	Total # of 18K ESAL Applications in One Direction Expected for a 30 Year Period (2010 to 2040) Flexible Pavement	SN	Rigid Pavement	SLAB
I-35E Mainlanes Only Section 1 From I-635 to Belt Line Road Dallas County	245,800	363,500	5.9	2.7	16,600	30	95,770,000	3	132,120,000 135,043,000 136,078,000	8" 10" 12"

Note: Average Daily Traffic values are bi-directional

IH 35E Managed Lanes Project
ESALs and Traffic Data

Mainlane Roads - 20 yrs

Location	Average Daily Traffic 2010	Average Daily Traffic 2030	Base Year Percent Truck ADT	Base Year Percent Truck DHV	ATHWLD	% Tandem Axles in ATHWLD	Total # of 18K ESAL Applications in One Direction Expected for a 20 Year Period (2010 to 2030) Flexible Pavement	S N	Rigid Pavement	SLAB
I-35E Mainlanes Only Section 2 From Belt Line Road To Valley Ridge Dallas & Denton Counties	200,300	288,000	6.3	2.8	16,400	30	54,599,000	3	75,349,000 77,016,000 77,607,000	8" 10" 12"

Data for Use in Air & Noise Analysis

Vehicle Class	Base Year % of ADT	Base Year % of DHV
Light Duty	93.7	97.2
Medium Duty	1.8	0.8
Heavy Duty	4.5	2

Mainlane Roads - 30 yrs

Location	Average Daily Traffic 2010	Average Daily Traffic 2040	Base Year Percent Truck ADT	Base Year Percent Truck DHV	ATHWLD	% Tandem Axles in ATHWLD	Total # of 18K ESAL Applications in One Direction Expected for a 30 Year Period (2010 to 2040) Flexible Pavement	S N	Rigid Pavement	SLAB
I-35E Mainlanes Only Section 2 From Belt Line Road To Valley Ridge Dallas & Denton Counties	200,300	312,000	6.3	2.8	16,400	30	85,926,000	3	118,582,000 121,206,000 122,135,000	8" 10" 12"

Note: Average Daily Traffic values are bi-directional

IH 35E Managed Lanes Project
ESALs and Traffic Data

Mainlane Roads - 20 yrs

Location	Average Daily Traffic 2010	Average Daily Traffic 2030	Base Year Percent Truck ADT	Base Year Percent Truck DHV	ATHWLD	% Tandem Axles in ATHWLD	Total # of 18K ESAL Applications in One Direction Expected for a 20 Year Period (2010 to 2030) Flexible Pavement	SN	Rigid Pavement	SLAB
I-35E Mainlanes Only Section 3 From Valley Ridge To US 377 Denton County	166,000	242,100	6.7	3.0	16,200	40	48,499,000	3	66,952,000 68,434,000 68,959,000	8" 10" 12"

Data for Use in Air & Noise Analysis

Vehicle Class	Base Year % of ADT	Base Year % of DHV
Light Duty	93.3	97
Medium Duty	1.9	0.9
Heavy Duty	4.8	2.1

Mainlane Roads - 30 yrs

Location	Average Daily Traffic 2010	Average Daily Traffic 2040	Base Year Percent Truck ADT	Base Year Percent Truck DHV	ATHWLD	% Tandem Axles in ATHWLD	Total # of 18K ESAL Applications in One Direction Expected for a 30 Year Period (2010 to 2040) Flexible Pavement	SN	Rigid Pavement	SLAB
I-35E Mainlanes Only Section 3 From Valley Ridge To US 377 Denton County	166,000	262,900	6.7	3.0	16,300	40	76,459,000	3	105,551,000 107,887,000 108,715,000	8" 10" 12"

Note: Average Daily Traffic values are bi-directional

IH 35E Managed Lanes Project
ESALs and Traffic Data

Mainlane Roads - 20 yrs

Location	Average Daily Traffic 2010	Average Daily Traffic 2030	Base Year Percent Truck ADT	Base Year Percent Truck DHV	ATHWLD	% Tandem Axles in ATHWLD	Total # of 18K ESAL Applications in One Direction Expected for a 20 Year Period (2010 to 2030) Flexible Pavement	SN	Rigid Pavement	SLAB
I-35E Mainlanes Only Section 4 From US 377 to US 380 Denton County	115,700	170,200	7.7	3.5	15,900	40	38,999,000	3	53,872,000 55,065,000 55,488,000	8" 10" 12"

Data for Use in Air & Noise Analysis

Vehicle Class	Base Year % of ADT	Base Year % of DHV
Light Duty	92.3	96.5
Medium Duty	2.2	1
Heavy Duty	5.5	2.5

Mainlane Roads - 30 yrs

Location	Average Daily Traffic 2010	Average Daily Traffic 2040	Base Year Percent Truck ADT	Base Year Percent Truck DHV	ATHWLD	% Tandem Axles in ATHWLD	Total # of 18K ESAL Applications in One Direction Expected for a 30 Year Period (2010 to 2040) Flexible Pavement	SN	Rigid Pavement	SLAB
I-35E Mainlanes Only Section 4 From US 377 to US 380 Denton County	115,700	185,000	7.7	3.5	15,900	40	61,531,000	3	84,998,000 86,880,000 87,547,000	8" 10" 12"

Note: Average Daily Traffic values are bi-directional

Texas Department of Transportation

Book 2 – Technical Provisions

IH 35E Managed Lanes Project

Attachment 11-1
Roadway Design Criteria

Table 1: Geometric Design Criteria							
	MAINLANES	**Managed Lanes**	**FRONTAGE ROADS**	**RAMPS (Tollway)**	**RAMPS (Freeway)**	**DIRECT CONNECTORS / COLLECTOR DISTRIBUTORS**	**CROSSING STREETS**
General							
Roadway Classification	Urban Freeway or Tollway	Urban Freeway or Tollway	Low Speed Urban Street	Tollway	Freeway	Urban Freeway or Tollway	Low Speed Urban Street
Design Speed	70 mph / 50 mph [5]	70 mph / 50 mph [5]	40 mph	70 mph / 50 mph [5]	40 mph / 35 mph [9] 30mph[9]/ 25 mph [9]	50 / 40[8] mph	30 mph
Stopping sight distance	730' / 425’	730' / 425’	305'	730' / 425’	305' / 250’ / 200’ / 155’	425’ / 305’	200’
Maximum super-elevation rate	6%	6%	4%	6%	6%	6%	N/A
Min. Radius of Curvature	2050' / 835’	2050' /835’	510'	2050' / 835’	510’ / 380’ / 275’ / 185’	835’ / 510’	275’
Vertical Alignment							
Minimum Grade	0.3%	0.3%	0.5 %	0.5 %	0.5 %	0.5 %	0.5 %
Maximum grade	3.0 % / 6.0%	3.0 % / 6.0%	7.0 %	3.0 % / 6.0%	7.0 %	6.0 %	7.0 %
Crest (Min. K-Value)	247 / 84	247 / 84	44	247 / 84	44 / 29 / 19 / 12	84 / 44	19
Sag (Min. K-Value)	181 / 96	181 / 96	64	181 / 96	64 / 49 / 37 / 26	96 / 64	37

Table 1: Geometric Design Criteria							
	MAINLANES	**Managed Lanes**	**FRONTAGE ROADS**	**RAMPS (Tollway)**	**RAMPS (Freeway)**	**DIRECT CONNECTORS / COLLECTOR DISTRIBUTORS**	**CROSSING STREETS**
Cross Section							
Lane width	11’	12’	2-11’lanes	12’	14’	Direct Connectors: 14’ Collector-Distributors: 12’	12’
Shoulder Width (min.) Inside Shoulder	2'	10’[7,8] and 2’ (see Draft Interim Schematic)	none	4’	4’[4]	4’[4]	Curb / none
Outside Shoulder	10'	10’[7,8] and 2’ (see Draft Interim Schematic)	5’	4’	8’[4]	8’[4]	Curb / none
Curb offset	N/A	N/A	Uncurbed Sections: N/A Curbed Sections: 5’[10]	N/A	N/A	N/A	N/A
Cross-slope (typical) Managed Lanes General Purpose Ln - Inside 2 lanes - Outside lanes -Shoulders	2.5 % 2.5 % 2.5 % 2.5 % 2.5 %	2.5 % 2.5 % 2.5 % 2.5 % 2.5 %	 2.0 % 2.0 % 2.0 %	 2.0 % 2.0 % 2.0 %	 2.0 % 2.0 % 2.0 %	 2.0 % 2.0 % 2.0 %	 2.0 % 2.0 % 2.0 %
Clear Zone							
Distance from edge of travel lane unless noted otherwise	30’	30’	Uncurbed sections: 10’ (measured from edge of travel lane) Curbed sections: 3’ (measured from face of curb)	16’	16’	N/A	Refer to notes 2 and 3
Side slopes: -within clear zone - outside clear zone	 6:1 usual (4:1 Max) 3:1 max	 6:1 usual (4:1 Max) 3:1 max	 6:1 (4:1 Max) 3:1 max	 6:1 (4:1 Max) 3:1 max	 6:1 (4:1 Max) 3:1 max	 6:1 (4:1 Max) 3:1 max	 6:1 (4:1 Max) 3:1 max

Table 1: Geometric Design Criteria							
	MAINLANES	**Managed Lanes**	**FRONTAGE ROADS**	**RAMPS (Tollway)**	**RAMPS (Freeway)**	**DIRECT CONNECTORS / COLLECTOR DISTRIBUTORS**	**CROSSING STREETS**
Vertical Clearance							
Roadway	16’-6” Min. (For ultimate bridges) 14’-6” Min. (For existing bridges to be widened)	16’-6” Min. (For ultimate bridges) 14’-6” Min. (For existing bridges to be widened)	16’-6” Desirable 14’-6” Min.	16’-6” Desirable 14’-6” Min.	16’-6” Desirable 14’-6” Min.	16’-6” Desirable 14’-6” Min.	Existing clearance
Railroad	23’-0”	23’-0”	23’-0”	23’-0”	23’-0”	23’-0”	23’-0”
Electrified light Rail	26’	26’	26’	26’	26’	26’	26’
Overhead Signs	17’-6”	17’-6”	17’-6”	17’-6”	17’-6”	17’-6”	17’-6”
Pedestrian	17’-6”	17’-6”	17’-6”				
Design Vehicles	WB-62	WB-62	WB-62	WB-62	WB-62	WB-62	As noted in Attachment 11-1, Table 2
Driveway Radius	N/A	N/A	30' min commercial, 15' min. residential	NA	NA	NA	30' min commercial, 15' min. residential

Notes:

1. Design criteria lower than shown above will not be allowed without TxDOT approval
2. See Attachment 11-1, Table 2 for crossing street functional classification
3. The face of the new bridge columns shall be located 6 feet or more from the face of curb
4. To mitigate restrictions on the design imposed by sight distance, it is acceptable to position the 8-foot shoulder on the inside of the curve and the 4-foot shoulder on the outside of the curve.
5. TxDOT will allow the reduction of the Design Speed for the Mainlaines, Managed Lanes, and Managed Lane ingress / egress ramps for the station ranges listed in Table 1A: Design Speed for Mainlanes and Managed Lanes. No Design Speed reductions will be allowed for other station ranges without TxDOT approval.
6. Developer shall provide a minimum 14’ immediately downstream from each tolling gantry to allow for enforcement areas..
7. Developer shall coordinate with local entities during final design to ensure adequate enforcement zones are provided
8. IH 35E SB to SH 121 WB Direct Connector only
9. These design speeds apply only to the ramps listed in Table 1B below
10. Developer shall include curb on newly constructed and reconstructed frontage road sections as needed to match existing frontage road section.

Table 1A: Design Speed for Mainlanes, Managed Lanes, and Managed Lane Ingress / Egress Ramps		
STATION	**STATION**	**DESIGN SPEED**
550+00	728+00	50 mph
728+00	767+00	50 mph
767+00	1253+00	50 mph
1253+00	1524+75	70 mph
1524+75	1632+00	50 mph
1632+00	1646+00	70 mph
1646+00	1688+00	50 mph
1688+00	1703+00	50 mph
1703+00	1986+00	50 mph
1986+00	1997+00	70 mph
1997+00	2120+00	50 mph

Table 1B: Ramps with Design Speeds Below 40 MPH	
Ramp Name	**DESIGN SPEED**
AF	25 mph
CF, CTA	30 mph
E	35 mph

Table 2: Crossing Street Function Classification																		
Intersecting Street	**Jurisdiction**	**Function Classification / Roadway Classification**	**Design Speed (MPH)**	**Position (over / under)**	**Design Vehicle**	**SBNB U-Turn**	**Sidewalk & Min. Usable Width[3]**	**Curb and Gutter**	**WB Offsets to face of curb**	**WB thru lanes**	**Turn lanes**	**EB thru lanes**	**EB Offsets to face of curb**	**Curb and Gutter**	**Sidewalk & Min. Usable Width[3]**	**Clear Zone for Cross Street Thru Lanes**	**NBSB U Turn**	**Bike / Ped. Accommodation?**	**Pedestrian Rail protection barrier?**
4th St.	Carrollton	Collector Urban	30	Under	WB-62	N	N	Curb, no gutter	0	1 (18')	NA	1 (18')	0’	Curb, no gutter	N	3' From face of curb	N	N	N
Main W.	Carrollton	Collector Urban	30	Under	WB-62	N	N	Curb, no gutter	0	1 (14.5')	NA	1 (14.5')	0’	Curb, no gutter	N	2.5' From face of curb	N	N	N
Belt Line Road	Carrollton	Arterial Urban	30	Under	WB-62	Y	Y (6.5') (5’ at Walls)	Y	0'	3 (11')	median with turn bays	3 (11')	0	Y	Y (6.5') (5’ at Walls)	3' From face of curb	Y	N	N
N. Broadway St.	Carrollton	Collector Urban	30	Over	WB-62	N	Match Existing	Match Existing	0’	2 (11’)	NA	2 (11’)	0’	Match Existing	Match Existing	Match Existing	N	N	N
Dickerson Pkwy.	Carrollton	Arterial Urban	30	Over	WB-62	N	Y (6') (WB Only)	Y (WB Only)	Offset to inside curb – 2’ Offset to outside curb – 2’	2 (14’)	median with turn bays	2 (14’)	Offset to inside curb – 2’ Offset to outside barrier – 2’	N	N	3' From face of curb	N	N	N
Round Grove Rd. (FM3040)	Lewisville	Arterial Urban	30	Over	WB-62	N	Y (6')	Y	2'	2 (12') 1 (14')	2 (12') with curbed median	2 (12') 1 (14')	2'	Y	Y (6')	3' From face of curb	N	N	N

Table 2: Crossing Street Function Classification																		
Intersecting Street	**Jurisdiction**	**Function Classification / Roadway Classification**	**Design Speed (MPH)**	**Position (over / under)**	**Design Vehicle**	**SBNB U-Turn**	**Sidewalk & Min. Usable Width[3]**	**Curb and Gutter**	**WB Offsets to face of curb**	**WB thru lanes**	**Turn lanes**	**EB thru lanes**	**EB Offsets to face of curb**	**Curb and Gutter**	**Sidewalk & Min. Usable Width[3]**	**Clear Zone for Cross Street Thru Lanes**	**NBSB U Turn**	**Bike / Ped. Accommodation?**	**Pedestrian Rail protection barrier?**
Corporate Dr.	Lewisville	Arterial Urban	30	Under	WB-62	N	Y (Variable)	Y	2'	2 (12') 1 (14')	4 (12') with curbed median	2 (12') 1 (14')	2'	Y	Y (Variable)	3' From face of curb	N	N	N
Fox Ave.	Lewisville	Collector Urban	30	Over	WB-62	N	Y (Variable)	Y	0'-1'	2 (11')	NA	2 (11')	0'-1'	N	Y (Variable)	3' From face of curb	N	N	N
FM 1171 / Main St.	Lewisville	Arterial Urban	30	Over	WB-62	N	Y (4')	Y	0'	2 (11') 1 (10')	2 (11') with curbed median	2 (11')	0'	Y	Y (4')	3' From face of curb	N	N	N
FM 407 / Lake Park Rd. **(Construction to be completed by others)**	Lewisville	Arterial Urban	30	Under	WB-62	Y	Y (Variable)	Y	0'	2 (12')	4 (12') with curbed median	2 (12')	0'	Y	Y (Variable)	3' From face of curb	Y	N	N
Garden Ridge Blvd.	Lewisville	Arterial Urban	30	Under	WB-62	N	Y (Variable)	Y	0'	2 (12')	2 (12') with curbed median	2 (12')	0'	Y	Y (Variable)	3' From face of curb	N	N	N
Highland Village	Lewisville	Collector Urban	30	N/A	WB-62	N	Y (Variable)	Y	0'	2 (12')	N/A	N/A	0'	Y	Y (Variable)	3' From face of curb	N	N	N

Table 2: Crossing Street Function Classification

Intersecting Street	Jurisdiction	Function Classification / Roadway Classification	Design Speed (MPH)	Position (over / under)	Design Vehicle	SBNB U-Turn	Sidewalk & Min. Usable Width[3]	Curb and Gutter	WB Offsets to face of curb	WB thru lanes	Turn lanes	EB thru lanes	EB Offsets to face of curb	Curb and Gutter	Sidewalk & Min. Usable Width[3]	Clear Zone for Cross Street Thru Lanes	NBSB U Turn	Bike / Ped. Accommodation?	Pedestrian Rail protection barrier?
County Ln. / Denton Dr.	Lake Dallas	Collector Urban	30	Under	WB-62	N	Y (Variable)	Y	0'	2 (12')	2 (12') with curbed median	2 (12')	0'	Y	Y (Variable)	3' From face of curb	N	N	N
Turbeville Rd. / Hurley Dr.	Lake Dallas	Collector Urban	30	Under	WB-62	N	N	N	0’	1 (12') 1 (16’)	2 (18’) (partial)	1 (12') 1 (16’)	0’	N	N	N/A	N	N	N
Corinth Pkwy.	Corinth	Collector Urban	30	Under	WB-62	N	Y (6')	Y	0'	1 (12') 1 (16')	4 (11')	1 (12') 1 (16’)	0'	Y	Y (6')	3' From face of curb	N	N	N
Post Oak	Corinth	Arterial Urban	30	Over	WB-62	N	Y (Variable)	Y	2'	1 (12') 1 (16’)	4 (11')	1 (12') 1 (16')	2'	Y	Y (Variable)	3' From face of curb	N	N	N
N. Texas Blvd.	Denton	Arterial Urban	30	Over	WB-62	N	Y (Variable)	Y	0’	2 (12')	4 (11')	1 (12') 1 (14’)	2’	Y	Y (15')	3' From face of curb	Y	N	N

1. *Notes: Bridge columns shall be 6’ (min.) from face of curb*
2. *Crossing streets not indicated to include sidewalks shall be laid out (including structural elements) to not preclude sidewalk construction in the future*
3. *Sidewalks shall be designed in accordance with applicable standards and Section 20.3.2*

Texas Department of Transportation
Book 2 - Technical Provisions

IH 35E Managed Lanes Project

Attachment 12-1

Drainage Report for Major Stream Crossings Guidelines

ATTACHMENT 12-1
Drainage Report for Major Stream Crossings Guidelines

I. Cover Sheet

The cover sheet shall contain the following items:

- Highway and stream name
- Project CSJ
- County name
- TxDOT name and logo
- Consultant company name and firm number (if applicable)
- Responsible engineer's seal, signature and date

II. Table of Contents

The Table of Contents shall be:

- List of topics by page number
- List of tables
- List of figures
- List of Appendix items

III. Report Topics

A. Purpose

- Describe the site location
- Describe the type of roadway facility
- Provide an explanation in general terms of what improvements are proposed for the project, why a hydraulic study is being performed, and describe what is happening to the existing structure (rehabilitation or replacement).
- Describe the design frequency being used for the proposed structure. If the design frequency is different from what is recommended in the Hydraulic Manual (i.e., a city requests a higher frequency design and is providing additional funding for the structure), then it must be discussed in this section of the report.

B. Existing Conditions

The following discussion items must be included about the structure(s) to be replaced, if applicable:

- Existing structure type - bridge (concrete beam spans, steel truss, etc.), multiple box culvert, etc.
- Existing structure width, number of lanes, shoulder widths, etc.
- The current and projected future average daily traffic (ADT)
- Existing structure span lengths
- Skew of existing structure

- Existing type of rail
- Structural condition and sufficiency rating for the existing structure
- Low chord of existing structure (bridges)
- Headwater and tailwater elevations (culverts) for the design and 100-year discharge
- Discussion of existing hydraulic conditions (i.e., frequency of overtopping, field evidence of overtopping, debris blockage, etc.)
- FEMA – Whether in a Special Flood Hazard Area (SFHA) or not. If in an SFHA, the zone (A, AE, AO, AH, V, VE) and its implications
- Any discussions, information, or requests from the local Floodplain Administrator (FPA)

C. Discharges

For studied SFHAs:

- Describe the FIS data format and how the data was acquired
- Describe all assumptions, conversions, and corrections
- Describe any benchmark or datum used
- If the FEMA discharges need to be corrected, fully explain why
- If the FEMA discharges are not used, fully explain why not

For non-studied drainage basins, provide the following:

- Drainage area size (square miles or acres)
- Describe the type of watershed in the report (uncontrolled or controlled by reservoirs/dams, etc.). If a dam is located upstream, provide documentation concerning data provided by the owner.
- Description of land use (agricultural, pasture, single family subdivisions, commercial, etc.) and type of terrain
- Soil types within the watershed
- Stream gauge information, if applicable (very rare for most projects)
- Discharges from previous studies, if available
- Runoff method used for design and comparison (regression equations, NRCS, etc.). The regression equations are good to use as a check for other methods.
- Computer model used for runoff calculations (spreadsheet, HEC-HMS, Win TR-55, etc.)
- Parameters used for the model (time of concentration, runoff curve numbers, etc.)
- Tabulation of the results of the calculations for each method (minimum of two methods for comparison)
- State the basis for the method selected for design frequency or AEP

Water Surface Profiles and Velocity Data

- Describe the computer software, including the version number, used for the analysis (HEC-RAS, HY-8, etc.). HEC-RAS should be must for crossings that involve FEMA detailed studies and for culverts with high flow over the road. FEMA considers HY-8 and other culvert programs to be approximate methods.
- Document the basis of the starting water surface profile or boundary conditions (i.e., the slope/area method was used assuming normal depth, etc.).
- Provide the vertical datum that is used for project elevations.
- Document any weir flow over the roadway (if applicable), for existing and proposed conditions.
- Document assumptions concerning Manning's n value for the channel and overbanks.
- The cross sections must be located far enough upstream and downstream from the site to show that water surface profiles for proposed conditions will match (or come close to matching) the existing profile.
- For SFHA's, document the use of the official FEMA model. Discuss any necessity for a corrected model. Provide a table of corrected water surface elevations (WSELs) compared to the current effective WSELs, as well as published FIS WSELs (if different from current effective),
- If the FEMA discharges were corrected, include a table comparing the WSELs using both the FIS and the corrected discharges.

D. Proposed Conditions

The discussion about the proposed structure must include the following items:

- Proposed structure type (TX prestressed concrete girders, box beams, slab-spans, multiple box culvert, etc.)
- Proposed structure width, number of lanes, offset to rail, etc.
- Proposed structure span length configuration
- Proposed skew of abutments and bents, or skew of culvert
- Proposed rail type
- Proposed low chord (bridges)
- Type of proposed wingwall (culverts)
- Freeboard based on the design storm (bridges) and why it should be necessary
- Basis for the allowable headwater and through-bridge velocity
- Proposed velocity/scour control measures (i.e., concrete riprap, etc.)
- Proposed upstream or downstream channel grading, if applicable

Water Surface Profiles and Velocity Data

- Include a table comparing existing and proposed (or corrected existing and proposed) WSELs and channel velocities for the channel cross sections used in the analysis.
- For studied zones with a floodway, include a table comparing existing and proposed floodway WSELs. Also include floodway widths.

- Provide a discussion of the tabulated results and describe if there are any adverse impacts to properties upstream or downstream of the site due to proposed construction.

E. Corridor Development Certificate (CDC) (if applicable)

The CDC permit applies to bridge construction on the West Fork, Elm Fork, or Main Stem of the Trinity River, as well as tributaries that experience backwater effects from these rivers. Refer to the current CDC manual and certificate form for details and requirements. This information is available on NCTCOG's web page at the following location:
http://www.nctcog.org/envir/SEEsafe/fpm/cdc/index.asp

- Tabulate current effective CDC model results (existing conditions) for 100-year flow and Standard Project Flood (SPF). If the current effective CDC model does not accurately depict actual existing conditions at your site (based on survey), then you will need to create a corrected effective CDC model with updated cross sections.
- Tabulate the CDC model results with proposed bridge and cross sections for 100-year flow and SPF.
- Tabulate the results of the valley storage analysis and determine if valley storage mitigation is required based on CDC requirements.
- Provide a discussion of the CDC analysis (i.e., was CDC criteria met?).

F. Scour Analysis and Stream Stability (if applicable)

This must be done in accordance with Bridge Division, Geotechnical Section guidance.

G. Coordination with Local Floodplain Administrator

- Document phone conversations, emails, or written correspondence with the local floodplain administrator concerning the proposed bridge or culvert. Include the date that the report and hydraulic data sheets were submitted to the local FPA in the report and on a note on the hydraulic data sheets.

J. Conclusion

- Include a discussion about how the proposed structure will meet the design requirements and why the chosen structure is the best alternative.

IV. Figures

The following items should be included in the list of Figures:

- Project location map (to scale with a north arrow)

- Drainage area map (to scale with a north arrow)
- Soils map(s) for the drainage basin
- A copy of the current FEMA FIRM for the site (if applicable)
- Proposed structure layout(s) and core boring sheets
- Proposed typical sections
- Roadway plan & profile sheets at the stream crossing
- A copy of the hydraulic data sheets to be submitted with the PS&E. One of these sheets should be a plan view drawing (to scale) showing location of channel cross sections used in the analysis. Preferably, this drawing should show topography and ground contours in the background.

V. Appendix

- Site photographs (in color)
- Runoff calculations (spread sheets, TR-55 output, HEC-HMS output, etc.)
- A copy of the current FIS for the stream reach (if applicable).
- Hydraulic calculation input and output (HECRAS, HEC-2, etc.) for existing and proposed conditions (include FEMA data, if applicable). Include the list of error messages generated by the software.
- Channel cross section plots
- Water surface profile plots
- HEC-RAS scour output and scour envelope plots (or spreadsheet calculations)
- CDC hydraulic calculations, valley storage calculations and completed CDC permit form (if applicable)
- Any other miscellaneous supporting data

VI. Submittals

- The number of hard copies will depend on District preference. Electronic copies shall contain the hydraulic report document (in Word or PDF format) as well as all appendices and hydrologic and hydraulic computer models for the project.

Notes:

1. Any drawing included as a figure or in the Appendix should be easy to read and preferably drawn to scale, with a north arrow when applicable. If USGS maps are used in the background of drainage area maps, the contours should be legible.
2. The latest version of software (HEC-HMS, TR-55, HEC-RAS, etc.) that is available at the time of preparing the report should be used. Beta versions of software shall not be used for TxDOT projects.
3. Many of the FEMA FIS computer models extend for miles upstream and downstream from the site. In that case, the Designer only needs to use the relevant portion of the model required for the design, based on engineering

judgment, which will reduce the size of the files the designer is working with, along with the paper output.

4. If hard copy reports are prepared, they should be bound using a three-ring or spiral binder, with labeled tabs used for Appendix dividers.
5. In general, the guidelines listed above are intended to apply to new location bridge class structures, replacement of existing bridge class structures, or modifications to existing structures that could potentially impact the design and 1% AEP (100-year) water surface profiles at stream crossings. Engineering judgment should be applied in each case.

Texas Department of Transportation
Book 2 - Technical Provisions

IH 35E Managed Lanes Project

Attachment 17-1

Tolling and ITS Exhibits

DISCLAIMER:
The use of this standard is governed by the "Texas Engineering Practice Act". No warranty of any kind is made by TxDOT for any purpose whatsoever. TxDOT assumes no responsibility for the conversion of this standard to other formats or for incorrect results or damages resulting from its use.

LEVELS DISPLAYED 1 2 3 ACC:

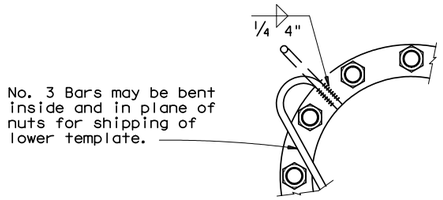

VIEW F

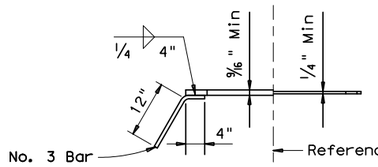

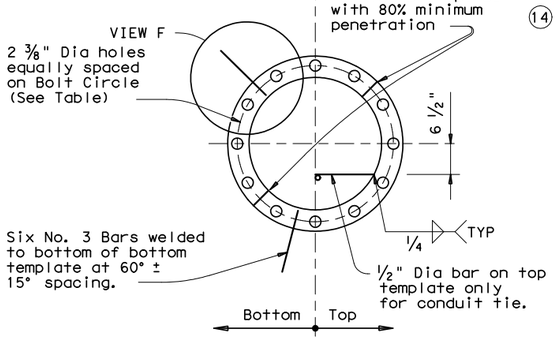

ANCHOR BOLT TEMPLATES

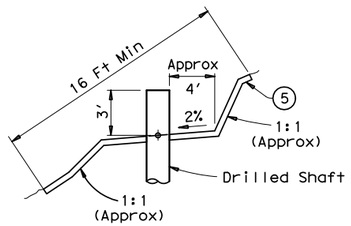

RIPRAP ON SLOPES

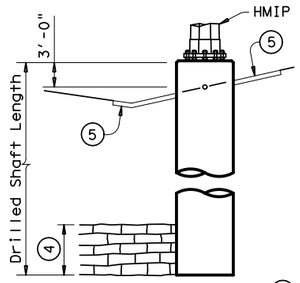

(5) Match slope of finished ground if slope is less than approx 4 to 1. For steeper slopes, bench to provide work area with approx 2 % slope around pole base. Other configurations may be shown elsewhere on the plans.

(4) If rock is encountered, the Drilled Shaft shall extend a minimum of two diameters into solid rock.

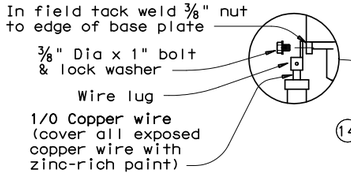

(12) Wire 1" Dia PVC to top and bottom templates

(13) Bond anchor bolts to rebar with 1/0 jumper and two mechanical connectors or by bending No. 3 bar on bottom template as shown and wire tightly with ten turns of No. 10 wire or one mechanical connector. Mechanical connectors shall be UL listed for concrete encasement.

(14) Cut PVC approximately 1" above concrete and install bell and/or bushing. Align conduit as close as possible to point of attachment to base plate to minimize bends in 1/0 wire.

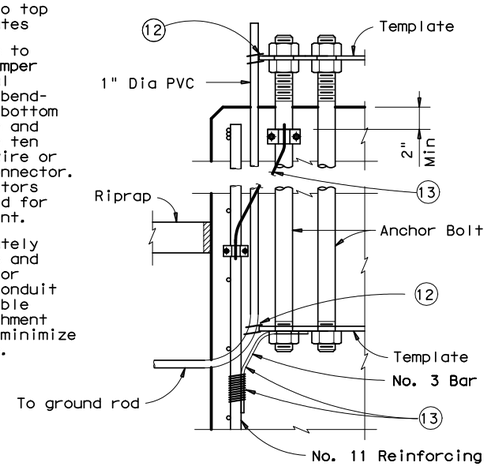

LIGHTNING PROTECTION SYSTEM

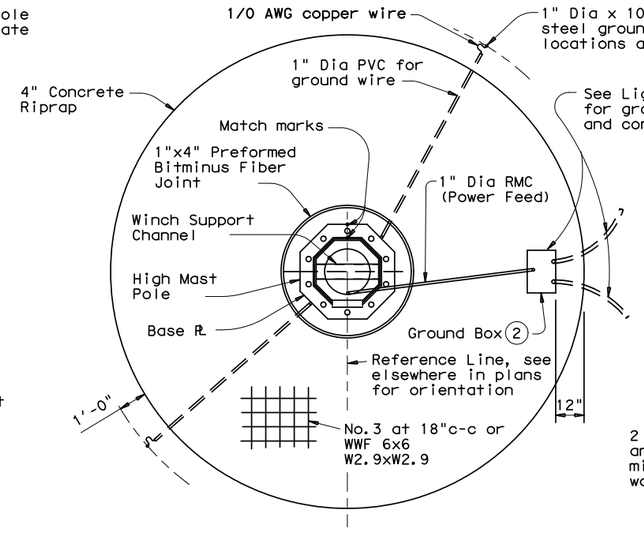

(2) Place ground box cover flush with riprap.

(10) If, due to tolerances in fabrication, the anchor bolt hole to ground sleeve weld is less than approx 7/8", clipped 1/2" thick washers shall be supplied at those

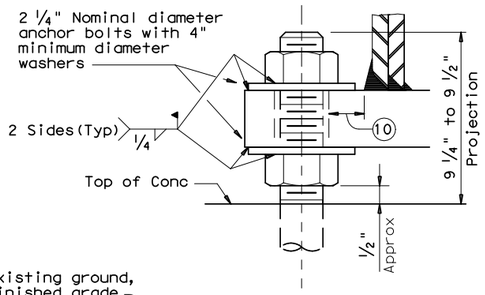

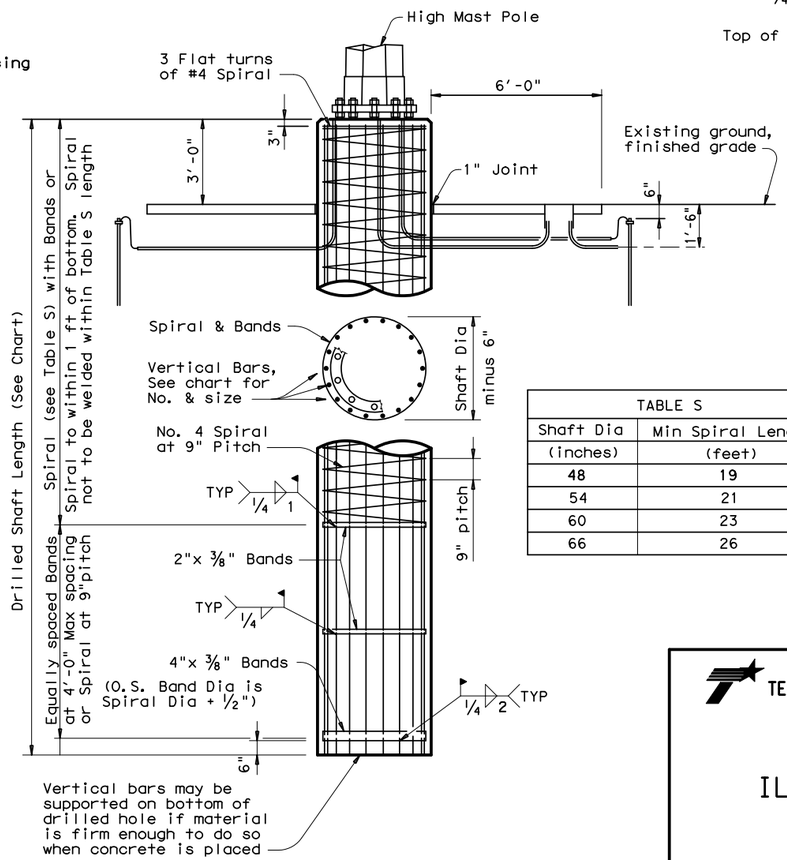

TABLE S	
Shaft Dia	Min Spiral Length
(inches)	(feet)
48	19
54	21
60	23
66	26

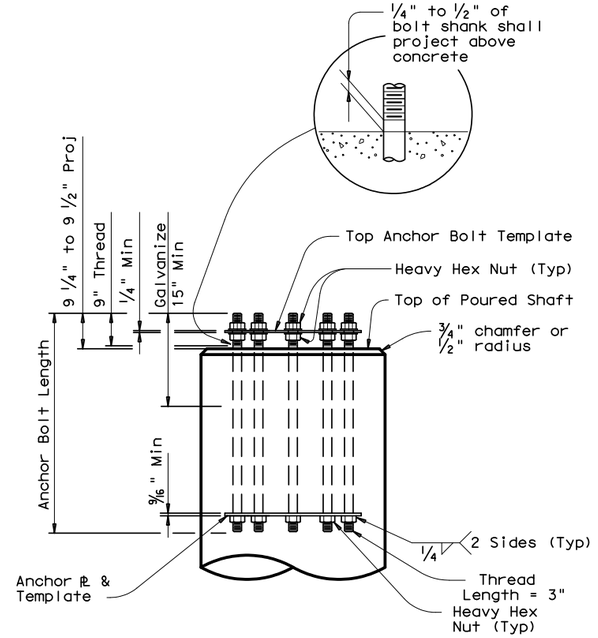

ANCHOR BOLT ASSEMBLY

(See Anchor Bolt Table for number of bolts required)

DRILLED SHAFT FOUNDATION DETAIL

STANDARD PLANS
TEXAS DEPARTMENT OF TRANSPORTATION
Traffic Operations Division

HIGH MAST ILLUMINATION POLE FOUNDATIONS

SHEET 1 OF 2 HMIF(1)-98

© TxDOT August 1995

DN: TxDOT	CK: TxDOT	DW: TxDOT	CK: TxDOT	MEG NO.:

REVISIONS	STATE DISTRICT	FEDERAL REGION	FEDERAL AID PROJECT		SHEET
11-97	TEXAS	6	CM ( )		124
5-98 ~ Anchor Bolt Circle Dia	COUNTY		CONTROL	SECTION	JOB	HIGHWAY
	DALLAS		0442	02	143	IH 35E

DISCLAIMER:
The use of this standard is governed by the "Texas Engineering Practice Act". No warranty of any kind is made by TxDOT for any purpose whatsoever. TxDOT assumes no responsibility for the conversion of this standard to other formats or for incorrect results or damages resulting from its use.

LEVELS DISPLAYED

1	2	3	4	5	6	7	8	9	10	11	12	13	14	15	16
17	18	19	20	21	22	23	24	25	26	27	28	29	30	31	32
33	34	35	36	37	38	39	40	41	42	43	44	45	46	47	48
49	50	51	52	53	54	55	56	57	58	59	60	61	62	63	

ACC:

⑥ Includes normal 3 Ft exposure. Shafts with more than 3 Ft exposure must have additional length.

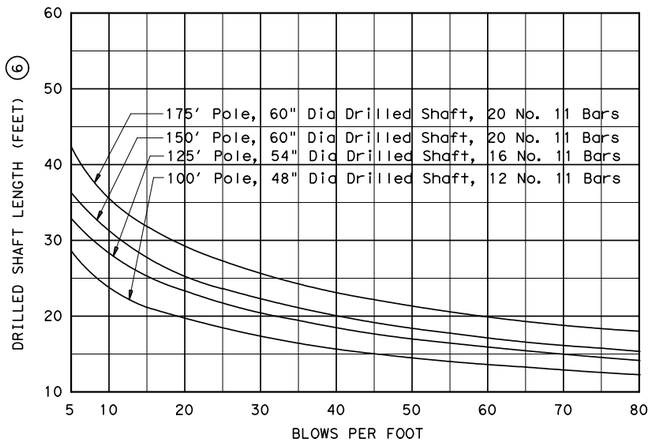

80 MPH POLES

Do not extrapolate below 5 Blows/Ft. A special design will be required for soil less than 5 Blows/Ft.

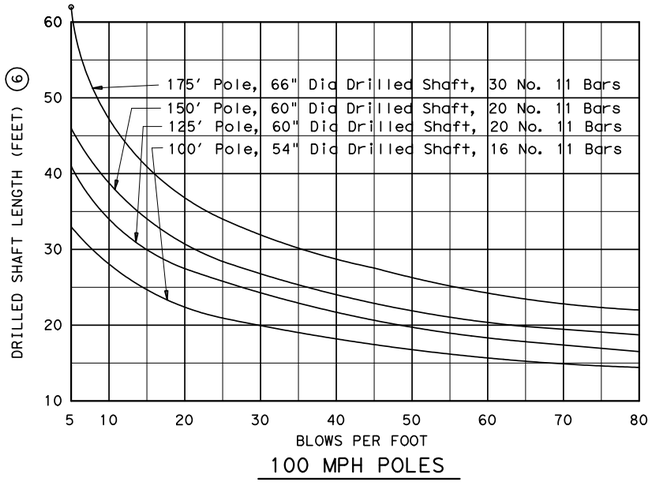

100 MPH POLES

Do not extrapolate below 5 Blows/Ft. A special design will be required for soil less than 5 Blows/Ft.

TEXAS CONE PENETROMETER TEST TABLES

NOTE: Use average "N" value over the top third of the embedded shaft. Ignore the top 2′ of soil.

ANCHOR BOLT TABLE

	Pole Height	Bolt Diameter	Bolt Length	Bolt Templates O D	Bolt Templates I D	No. of Bolts	Bolt Cir Dia
	(feet)	(inches)	(feet)	(inches)	(inches)	~	(inches)
80 MPH DESIGNS	8 SIDED POLE						
	175	2.25	4.83	45.5	36.5	16	41
	150	2.25	4.83	42.5	33.5	12	38
	125	2.25	4.83	39.5	30.5	8	35
	100	2.25	4.83	35.5	26.5	6	31
	12 SIDED POLE						
	175	2.25	4.83	48.5	39.5	12	44
	150	2.25	4.83	45.5	36.5	10	41
	125	2.25	4.83	40.5	31.5	8	36
	100	2.25	4.83	36.5	27.5	6	32
100 MPH DESIGNS	8 SIDED POLE						
	175	2.25	4.83	50.5	41.5	20	46
	150	2.25	4.83	47.5	38.5	16	43
	125	2.25	4.83	43.5	34.5	12	39
	100	2.25	4.83	38.5	29.5	10	34
	12 SIDED POLE						
	175	2.25	4.83	50.5	41.5	16	46
	150	2.25	4.83	48.5	39.5	12	44
	125	2.25	4.83	44.5	35.5	10	40
	100	2.25	4.83	40.5	31.5	6	36

MISCELLANEOUS QUANTITIES - ONE HMIF

Shaft Diameter	(in)	⑦	48	54	60
Concrete Riprap	(CY)		2.33	2.44	2.56
Reinforcing	(Lbs)	⑧	94	99	103
Ground Box	(ea)		1	1	1
R O W Marker	(ea)	⑨	1	1	1

⑦ See elsewhere on plans for length of Drilled Shaft required.
⑧ For Contractors information only.
⑨ Designated elsewhere on plans if required.

GENERAL NOTES:

Unless otherwise noted, the welded steel bands may be replaced with spiral as shown on the foundation details.

Anchor bolts shall be placed in foundation so there are always two bolts on reference line.

Drilled shaft lengths as determined from the foundation design chart or other acceptable methods are to be as shown elsewhere on the plans.

ODSR may not be used for HMIF drilled shafts.

Concrete for drilled shafts shall be Class C.

Repair welded areas with zinc-rich paint.

All Anchor Bolts, Nuts and Washers shall be galvanized in accordance with Item 445, "Galvanizing".

STANDARD PLANS
TEXAS DEPARTMENT OF TRANSPORTATION
Traffic Operations Division

HIGH MAST ILLUMINATION POLE FOUNDATIONS

SHEET 2 OF 2 HMIF(2)-98

©TxDOT August 1995

DN-TxDOT	CK-TxDOT	DW-TxDOT	CK-TxDOT	MSG NO.:

REVISIONS
5-98 ~ Anchor Bolt Circle Dia

STATE DISTRICT	FEDERAL REGION	FEDERAL AID PROJECT			SHEET
TEXAS	6	CM	( )		125
COUNTY		CONTROL	SECTION	JOB	HIGHWAY
DALLAS		0442	02	143	IH 35E

78B

DISCLAIMER:
The use of this standard is governed by the "Texas Engineering Practice Act". No warranty of any kind is made by TxDOT for any purpose whatsoever. TxDOT assumes no responsibility for the conversion of this standard to other formats or for incorrect results or damages resulting from its use.

LEVELS DISPLAYED
1 2 3 4 5 6 7 8 9 10 11 12 13 14 15 16
17 18 19 20 21 22 23 24 25 26 27 28 29 30 31 32
33 34 35 36 37 38 39 40 41 42 43 44 45 46 47 48
49 50 51 52 53 54 55 56 57 58 59 60 61 62 63

ACC:

(LV=1,2 for English; 1,3 for Metric)

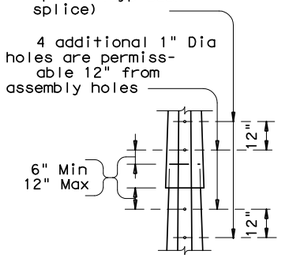

SPLICE DETAIL

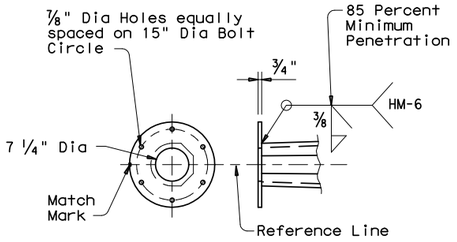

VIEW C

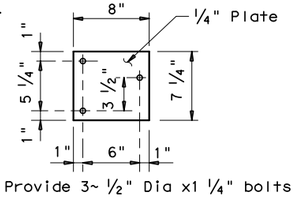

Provide 3~ ½" Dia x1 ¼" bolts

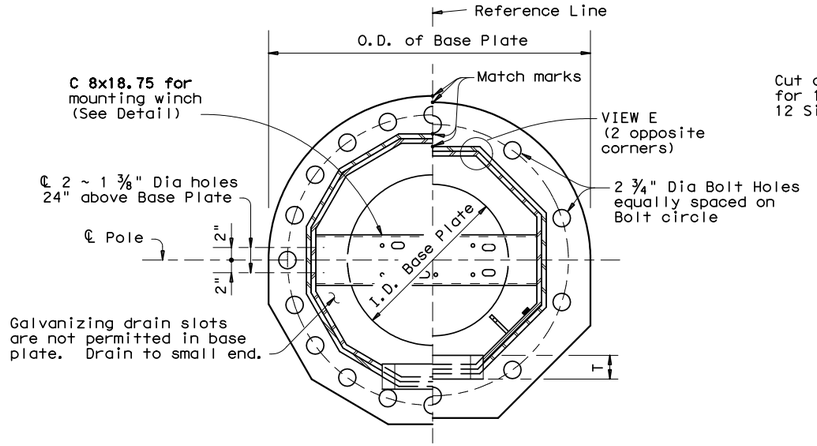

SECTION A-A

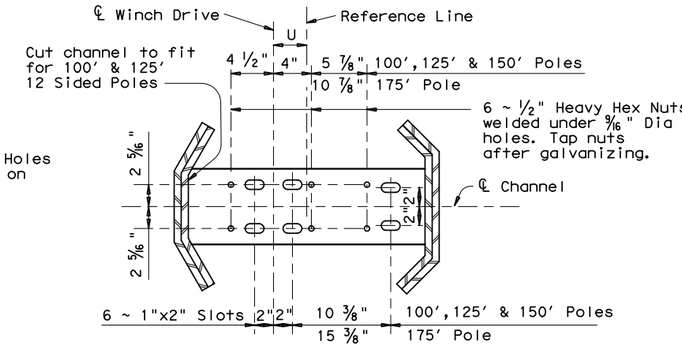

WINCH MOUNTING CHANNEL

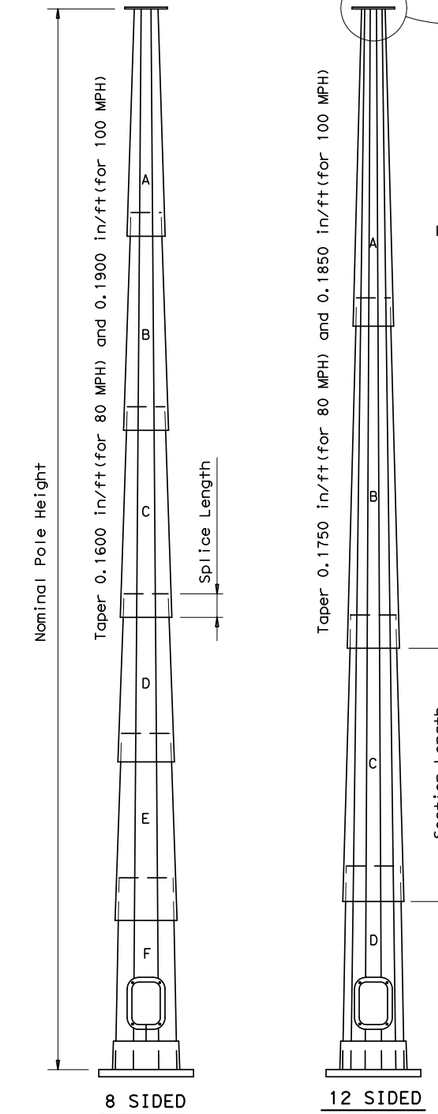

8 SIDED

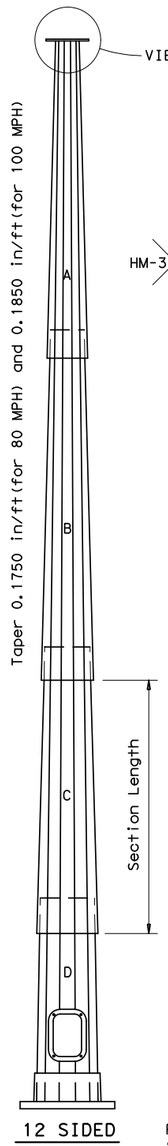

12 SIDED

POLE ELEVATIONS

(Showing 175 Ft Poles)

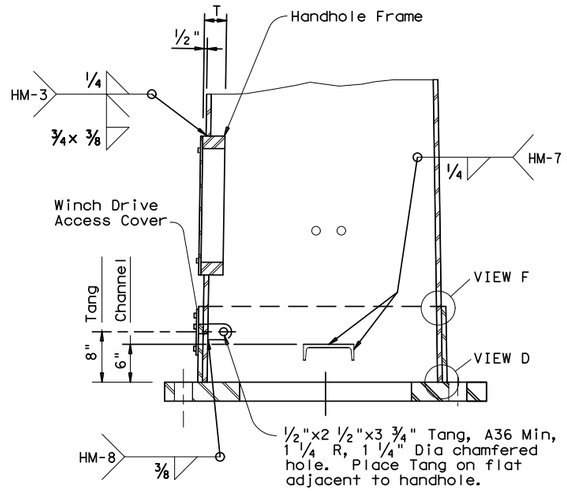

SECTION B-B

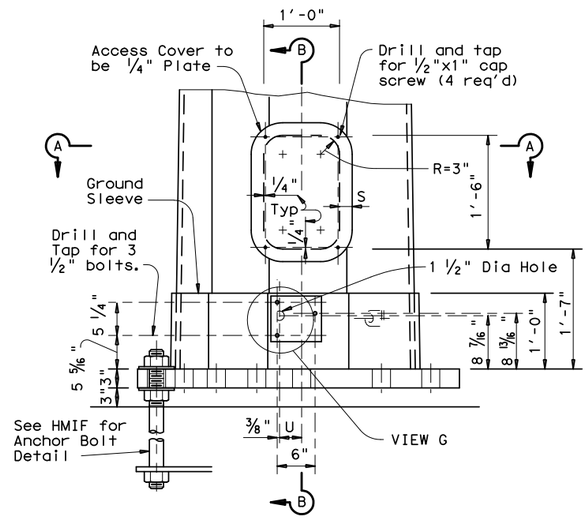

ELEV OF POLE BASE

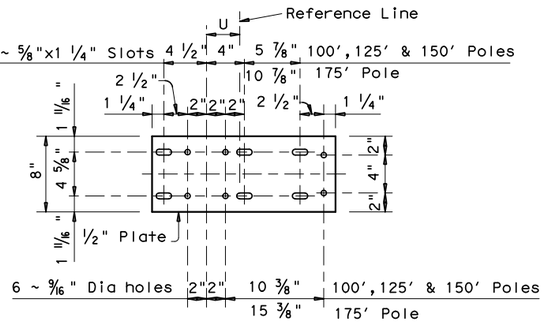

WINCH MOUNTING PLATE

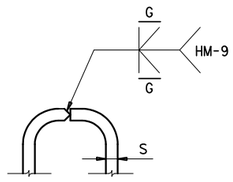

A bent and welded handhole frame is permissable. Heating, bending, and finish grinding must be approved with the HM-9 weld procedure.

OPTIONAL HANDHOLE FRAME

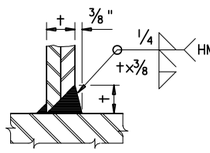

STANDARD WELD

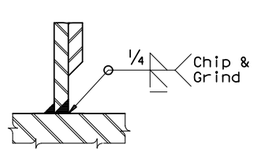

OPTIONAL WELD STEP 1
(a) Prepare Shaft and ground sleeve.
(b) Weld shaft to base plate, chip and grind flush (1/8 " max radius.)

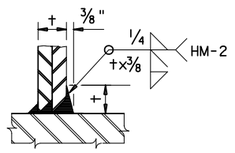

OPTIONAL WELD STEP 2
(c) Position ground sleeve.
(d) Weld to base plate with tapered reinforcement.

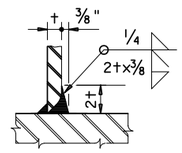

NO GROUND SLEEVE
(Testing required)

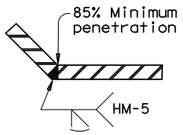

Ground sleeve to be same thickness as lower pole section, except shall not be less than 0.375 inch

Provide 100% penetration in outer sections at splices and at base plates for 1.5 pole diameters plus 6". Also provide 100% penetration for ground sleeve seam welds.

VIEW E

VIEWS D

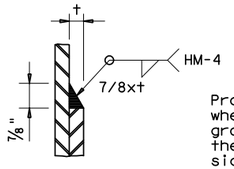

VIEW F

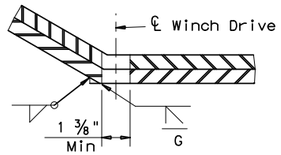

Provide welded and ground filler or cover plate where winch drive conflicts with bend line in ground sleeve for the 8 sided, 80 mph, 100′ pole, the 12 sided, 100 mph, 100′ pole, and the 12 sided, 80 mph, 175′, 125′ and 100′ poles.

VIEW G

STANDARD PLANS
TEXAS DEPARTMENT OF TRANSPORTATION
Traffic Operations Division

HIGH MAST ILLUMINATION POLES
100′ - 125′ - 150′ - 175′

SHEET 1 OF 2 HMIP(1)-98

© TxDOT August 1995

DN: TxDOT	CK: TxDOT	DW: TxDOT	CK: TxDOT	MEG NO.:

REVISIONS
11-97
5-98 ~ Anchor Bolt Circle Dia

STATE DISTRICT	FEDERAL REGION	FEDERAL AID PROJECT		SHEET
TEXAS	6	CM	( )	126

COUNTY	CONTROL	SECTION	JOB	HIGHWAY
DALLAS	0442	02	143	IH 35E

77A

DISCLAIMER:
The use of this standard is governed by the "Texas Engineering Practice Act". No warranty of any kind is made by TxDOT for any purpose whatsoever. TxDOT assumes no responsibility for the conversion of this standard for other formats or for incorrect results or damages resulting from its use.

LEVELS DISPLAYED
1 2 3 4 5 6 7 8 9 10 11 12 13 14 15 16
17 18 19 20 21 22 23 24 25 26 27 28 29 30 31 32
33 34 35 36 37 38 39 40 41 42 43 44 45 46 47 48
49 50 51 52 53 54 55 56 57 58 59 60 61 62 63

ACC:

(LV=1,2 for English; 1,3 for Metric)

TABLE OF VARIABLE POLE DIMENSIONS

	Ht (ft)	Section	8 SIDED POLE Diameter (Inches) Bottom	Top	Thickness (inches)	Length (feet)	Splice (inches)	12 SIDED POLE Diameter (Inches) Bottom	Top	Thickness (inches)	Length (feet)	Splice (inches)
80 MPH DESIGNS	175	A	13.083	7.750	.250	33.33	19	16.792	7.750	.250	51.67	24
		B	17.792	12.205	.375	34.92	25	24.858	15.817	.313	51.67	36
		C	22.250	16.583	.375	35.42	32	32.625	23.583	.313	51.67	48
		D	25.375	20.948	.438	27.67	36	36.250	31.175	.375	29.00	~
		E	28.375	23.895	.500	28.00	41					
		F	31.250	26.703	.500	28.42	~					
	150	A	13.083	7.750	.250	33.33	19	16.792	7.750	.250	51.67	24
		B	17.792	12.205	.375	34.92	25	24.858	15.817	.313	51.67	36
		C	22.250	16.583	.375	35.42	32	32.625	23.583	.313	51.67	~
		D	25.375	20.948	.438	27.67	36					
		E	28.375	23.895	.500	28.00	~					
	125	A	13.083	7.750	.250	33.33	19	16.792	7.750	.250	51.67	24
		B	17.792	12.205	.375	34.92	25	24.858	15.817	.313	51.67	36
		C	22.250	16.583	.375	35.67	32	28.250	23.583	.313	26.67	~
		D	25.375	20.948	.438	27.67	~					
	100	A	13.083	7.750	.250	33.33	19	16.792	7.750	.250	51.67	24
		B	17.792	12.205	.375	34.67	25	24.625	15.817	.313	50.33	~
		C	22.250	16.583	.375	35.67	~					
100 MPH DESIGNS	175	A	14.208	7.875	.313	33.33	20	17.433	7.875	.375	51.67	25
		B	19.792	13.142	.375	35.00	28	25.747	16.173	.438	51.75	37
		C	25.250	18.473	.438	35.67	36	33.750	24.176	.438	51.75	49
		D	29.000	23.680	.500	28.00	42	37.375	31.995	.500	29.08	~
		E	32.625	27.210	.563	28.50	47					
		F	36.125	30.631	.563	28.92	~					
	150	A	14.208	7.875	.313	33.33	20	17.433	7.875	.375	51.67	25
		B	19.792	13.142	.375	35.00	28	25.747	16.173	.438	51.75	37
		C	25.250	18.473	.438	35.67	36	33.750	24.176	.438	51.75	~
		D	29.00	23.680	.500	28.00	42					
		E	32.625	27.210	.563	28.50	~					
	125	A	14.208	7.785	.313	33.33	20	17.433	7.875	.375	51.67	25
		B	19.792	13.142	.375	35.00	28	25.747	16.173	.438	51.75	37
		C	25.250	18.473	.438	35.67	36	29.125	24.176	,438	26.75	~
		D	29.00	23.680	.500	28.00	~					
	100	A	14.208	7,875	.313	33.33	20	17.433	7.875	.375	51.67	25
		B	19.792	13.142	.375	35.00	28	25.500	16.173	.375	50.42	~
		C	25.250	18.473	.438	35.67	~					

Diameters are measured across the flats.

TABLE OF VARIABLE BASE DIMENSIONS

	Ht (ft)	O.D. (inches)	I.D. (inches)	Bolt Cir (inches)	No. Bolts	S (inches)	T (inches)	U (inches)
	8 SIDED POLE							
80 MPH DESIGNS	175′	47	22	41	16	2.00	3.75	4.50
	150′	44	18	38	12	2.00	4.00	3.50
	125′	41	16	35	8	2.00	4.50	3.50
	100′	37	14	31	6	2.00	5.00	3.50
	12 SIDED POLE							
	175′	50	24	44	12	1.75	3.50	3.50
	150′	47	22	41	10	1.75	3.50	2.50
	125′	42	18	36	8	1.75	3.75	2.50
	100′	38	13	32	6	1.75	4.00	2.50
	8 SIDED POLE							
100 MPH DESIGNS	175′	52	27	46	20	1.75	3.50	4.50
	150′	49	23	43	16	1.75	4.00	3.50
	125′	45	21	39	12	1.75	4.50	3.50
	100′	40	17	34	10	1.75	4.50	3.50
	12 SIDED POLE							
	175′	52	27	46	16	1.75	3.25	3.50
	150′	50	25	44	12	1.75	3.50	2.50
	125′	46	22	40	10	1.75	3.75	2.50
	100′	42	19	36	6	1.75	4.00	2.50

NOTE: Base Plate may be round or with 8 or 12 equal segments matching the pole.

GENERAL NOTES:

Design conforms to AASHTO Standard Specifications for Structural Supports for Highway Signs, Luminaries, and Traffic Signals and Interim Revisions thereto. The Design Wind Speed is 80 mph or 100 mph.

The required design height and wind speed shall be as shown elsewhere in the plans.

Each pole section, top flange plate and base plate shall be permanently marked on the reference line. The required mark locations are shown on the baseplate, top plate, and foundation plan details. These marks shall be used in pole assembly and erection alignment. The reference line and anchor bolt orientation shall be parallel to roadway centerline unless otherwise shown on Lighting Layouts.

STANDARD PLANS
TEXAS DEPARTMENT OF TRANSPORTATION
Traffic Operations Division

HIGH MAST ILLUMINATION POLES 100′ - 125′ - 150′ - 175′

SHEET 2 OF 2 HMIP(2)-98

©TxDOT August 1995

DN: TxDOT	CK: TxDOT	DW: TxDOT	CK: TxDOT	MEG NO.:

REVISIONS
5-98 ~ Anchor Bolt Circle Dia

STATE DISTRICT	FEDERAL REGION	FEDERAL AID PROJECT	SHEET
TEXAS	6	CM ( )	127

COUNTY	CONTROL	SECTION	JOB	HIGHWAY
DALLAS	0442	02	143	IH 35E

77B

FMPO

TYPICAL CONDUIT CROSS SECTION

2 - 3 IN. PVC AND 1 - 4 IN. PVC MULTIDUCT (CONCRETE ENCASED), AND

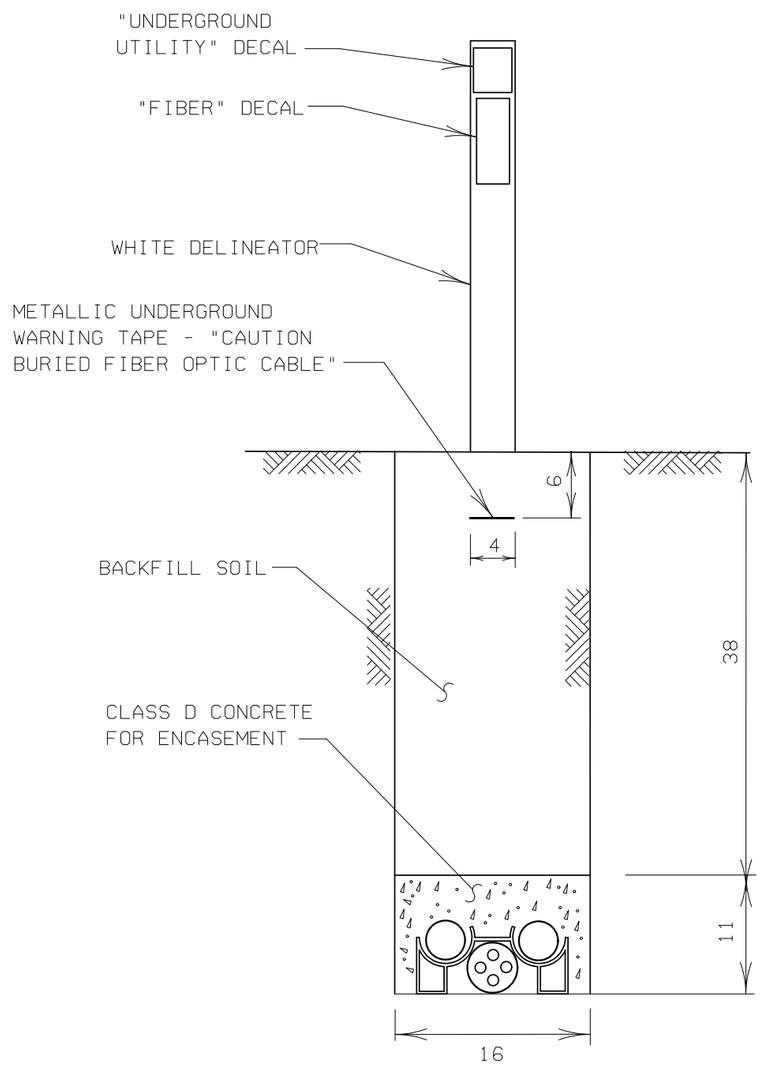

ALL DIMENSIONS ARE IN INCHES
UNLESS OTHERWISE NOTED

STATE OF TEXAS
RAJESH N. GURNANI
86265
LICENSED PROFESSIONAL ENGINEER

The seal appearing on this document was authorized by Rajesh N. Gurnani, P.E. 86265, on

_____ ,P.E.
Signature of Registrant & Date

LEVELS

1	2	3	4	5	6	7
8		10	11	12	13	14
15	16	17	18	19	20	21
22	23	24	25	26	27	28
29	30	31	32	33	34	35
36	37	38	39	40	41	42
43	44	45	46	47	48	49
50	51	52	53	54	55	56
57	58	59	60	61	62	63

Texas Department of Transportation
© 2008

"ITS" MISCELLANEOUS ITEMS SHEET

SHEET 2 OF 2

DESIGN	FED.RD. DIV.NO.	FEDERAL AID PROJECT NO.		HIGHWAY NO.
DK/LMT	6	CM ( )		IH 35E
GRAPHICS	STATE	DISTRICT	COUNTY	SHEET NO.
DK	TEXAS	DALLAS	DALLAS	112
CHECK	CONTROL	SECTION	JOB	
RNG	0442	02	143	
CHECK				

"ITS" GROUND BOX TYPE 1

(MIN. INSIDE DIMENSIONS OF 2 FT X 3 FT)

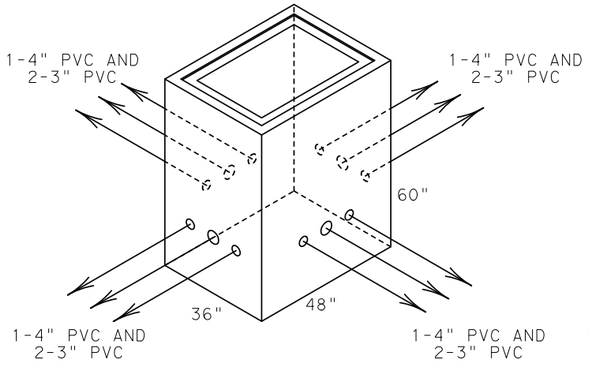

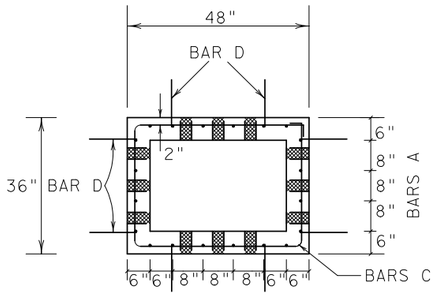

BARS A

NOTE: BAR SPACING IS THE SAME ON OPPOSING SIDES.

PLAN

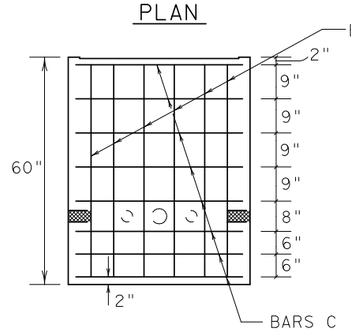

ELEVATION

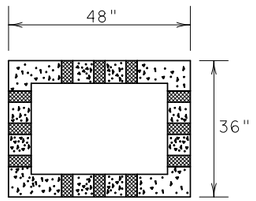

- ADAPTER FOR PVC CONDUIT. (REQUIRED CONDUIT SIZES ARE AS SHOWN ABOVE.)

SEE DETAIL B LOCATED ON SHEET 2 OF 2.

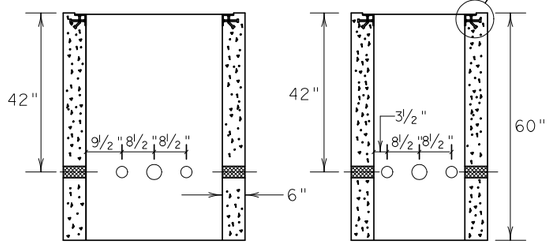

"ITS" GROUND BOX TYPE 2

(MIN. INSIDE DIMENSIONS OF 3 FT X 3 FT)

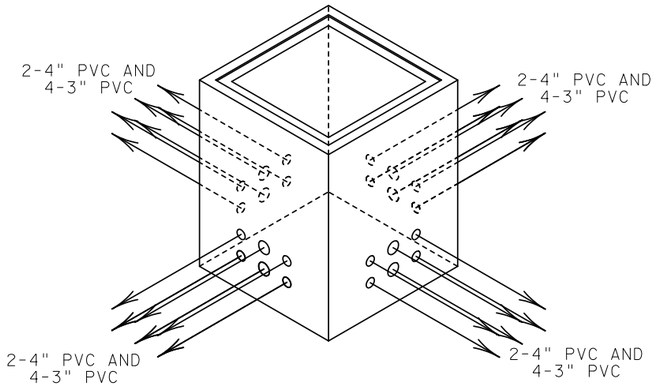

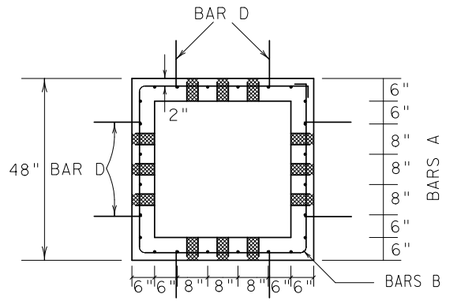

NOTE: BAR SPACING IS THE SAME ON ALL SIDES

PLAN

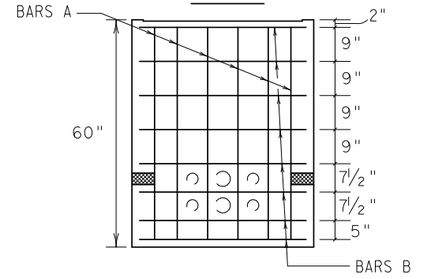

ELEVATION

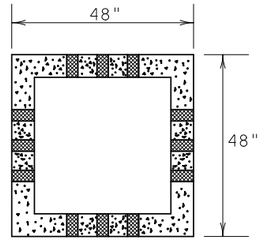

- ADAPTER FOR PVC CONDUIT. (REQUIRED CONDUIT SIZES ARE AS SHOWN ABOVE.)

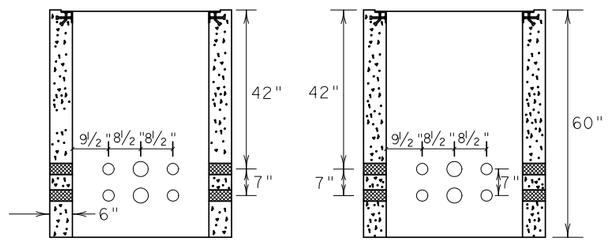

NOTES:

1. CONCRETE FOR "ITS" GROUND BOXES SHALL BE CLASS A.
2. ADAPTERS FOR THE PVC CONDUITS ARE PLACED SYMETRICALLY ABOUT THE CENTERLINE OF THE BOX AT THE DEPTHS SHOWN, UNLESS OTHERWISE NOTED.
3. ADAPTERS SHALL BE APPROPRIATELY SIZED FOR THE CONDUITS INDICATED ON THIS DRAWING. THE ADAPTERS SHALL PROVIDE AN AIR TIGHT AND WATER TIGHT CONNECTION.
4. "ITS" GROUND BOX BOTTOMS SHALL BE LEFT OPEN.
5. ALL "ITS" GROUND BOXES SHALL BE PROVIDED WITH A SECURABLE, TAMPER-PROOF LID. SEE "ITS" GROUND BOX LID DETAIL.
6. ALL "ITS" GROUND BOXES ARE TO BE INSTALLED ON A 24-INCH BASE OF CRUSHED STONE WHICH EXTENDS 6 INCHES IN ALL DIRECTIONS FROM THE PERIMETER OF THE BOX. THE CRUSHED STONE WILL NOT BE PAID FOR DIRECTLY, BUT SHALL BE CONSIDERED SUBSIDIARY TO ITEM 624, GROUND BOXES.
7. SEE SHEET 2 OF 2 FOR BAR BENDING DETAILS AND FOR REINFORCING STEEL AND CONCRETE CHART.
8. FOR GROUND BOX APRON DETAIL SEE STANDARD SHEET ED (3)-03.
9. STEEL COVERS SHALL BE GROUNDED AS DESCRIBED IN THE LATEST EDITION OF THE NATIONAL ELECTRICAL CODE.
10. FOR DETAILS OF THE TYPE D GROUND BOX SEE STANDARD SHEET ED(3)-03.
11. ADAPTERS THAT DO NOT HAVE CONDUITS ATTACHED SHALL BE CAPPED AND SEALED.

STATE OF TEXAS
RAJESH N. GURNANI
86265
REGISTERED PROFESSIONAL ENGINEER

Signature ,P.E. Date

Texas Department of Transportation
© 2008

"ITS" GROUND BOX DETAILS

SHEET 1 OF 2

DESIGN	FED. RD. DIV. NO.	FEDERAL AID PROJECT NO.		HIGHWAY NO.
DK	6	CM	( )	IH 35E
GRAPHICS: DK	STATE	DISTRICT	COUNTY	SHEET NO.
CHECK: RNG	TEXAS	DALLAS	DALLAS	
CHECK	CONTROL	SECTION	JOB	
	0442	02	143	

FMPO

FMPO

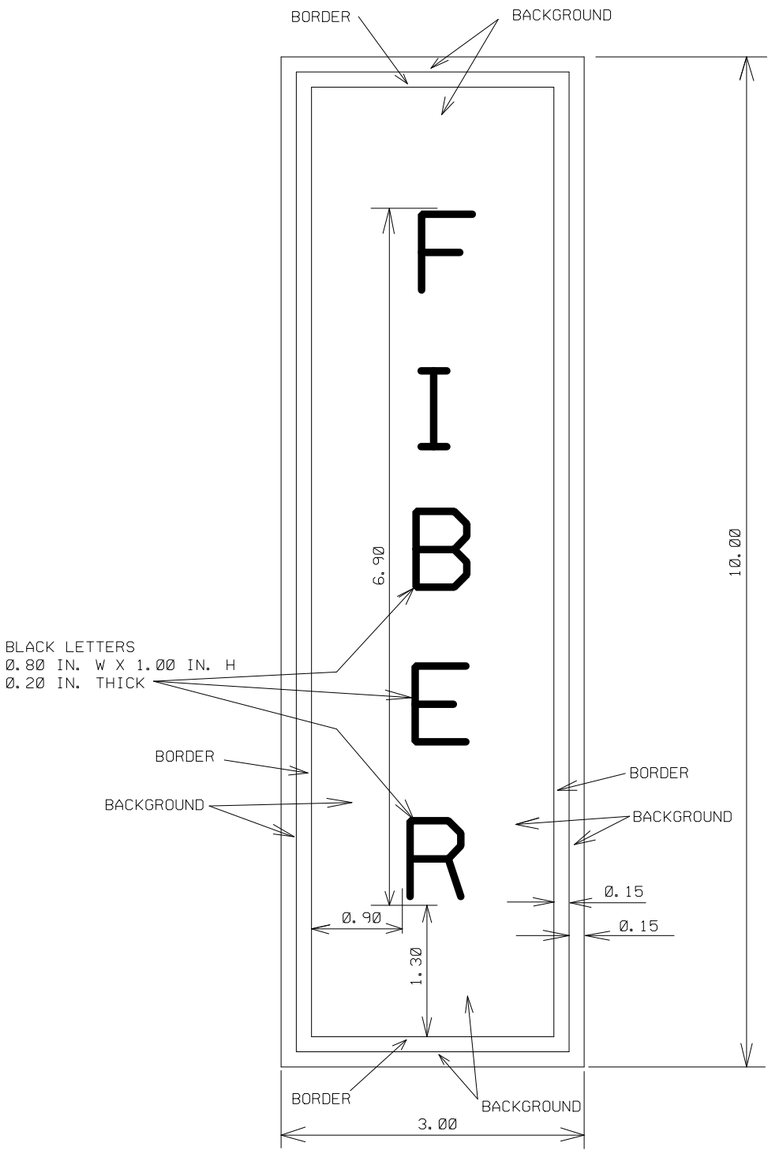

BORDER - BLACK
BACKGROUND - ORANGE REFLECTIVE

"FIBER" DECAL DETAIL

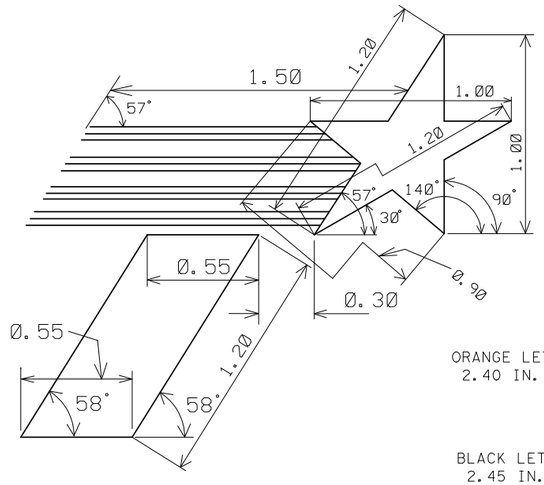

DETAIL A

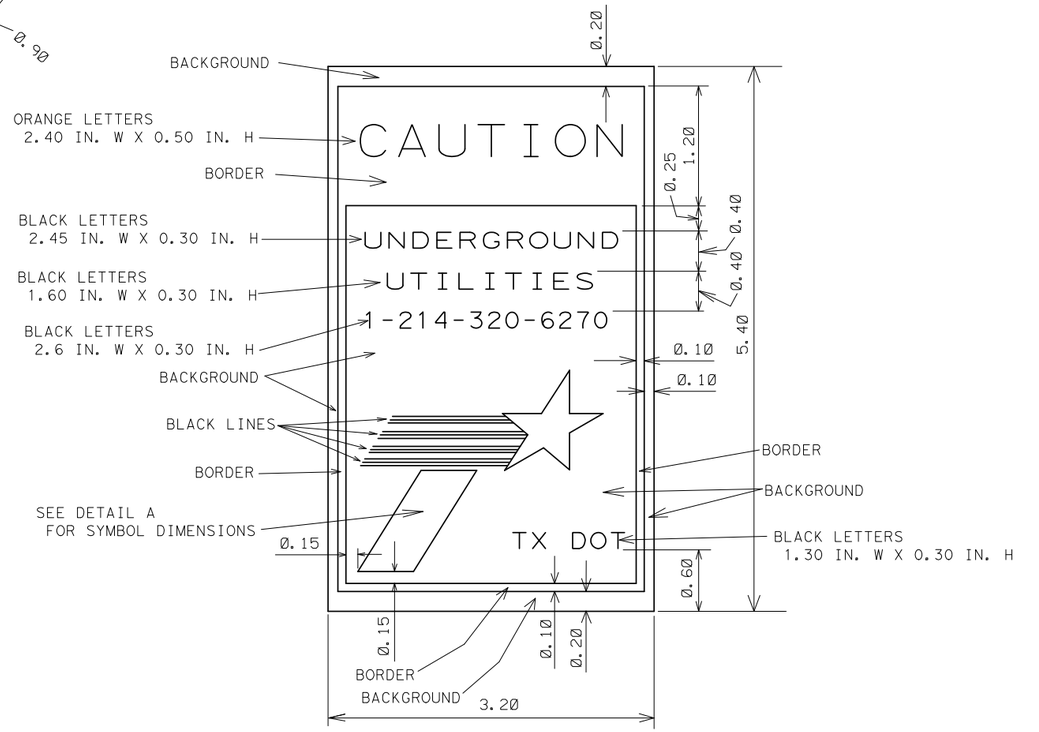

BORDER - BLACK
SYMBOL - BLACK
BACKGROUND - ORANGE REFLECTIVE

"UNDERGROUND UTILITIES" DECAL DETAIL

LEVELS

1	2	3	4	5	6	7
8		10	11	12	13	14
15	16	17	18	19	20	21
22	23	24	25	26	27	28
29	30	31	32	33	34	35
36	37	38	39	40	41	42
43	44	45	46	47	48	49
50	51	52	53	54	55	56
57	58	59	60	61	62	63

ALL DIMENSIONS ARE IN INCHES
UNLESS OTHERWISE NOTED

STATE OF TEXAS
RAJESH N. GURNANI
86265
LICENSED
PROFESSIONAL ENGINEER

The seal appearing on this document was authorized by Rajesh N. Gurnani, P.E. 86265, on

,P.E.
Signature of Registrant & Date

Texas Department of Transportation
© 2008

"ITS" MISCELLANEOUS ITEMS SHEET

SHEET 1 OF 2

DESIGN	FED.RD. DIV.NO.	FEDERAL AID PROJECT NO.		HIGHWAY NO.
DK/LMT	6	CM	( )	IH 35E
GRAPHICS: DK	STATE	DISTRICT	COUNTY	SHEET NO.
CHECK: RNG	TEXAS	DALLAS	DALLAS	111
CHECK	CONTROL	SECTION	JOB	
	0442	02	143	

DESIGN | FED.RD. DIV.NO. | FEDERAL AID PROJECT NO. | HIGHWAY NO.

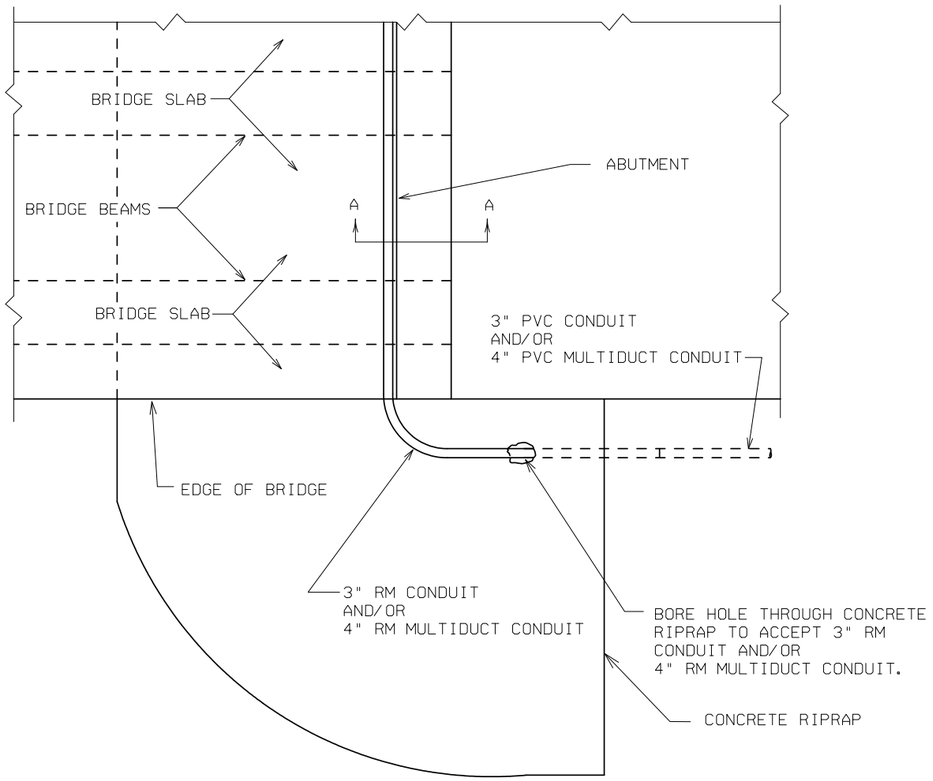

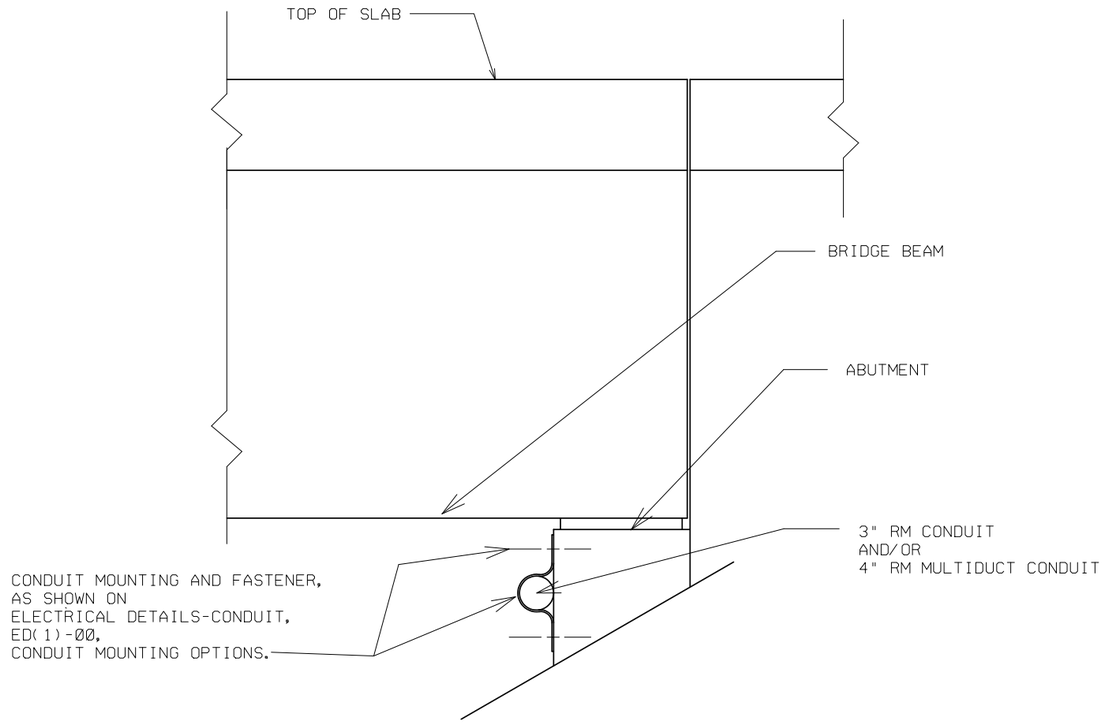

SECTION A - A

TYPICAL ATTACHMENT OF CONDUIT TO BRIDGE ABUTMENT

2-4" MULTIDUCT CONDUIT
AND
4-3" PVC CONDUIT

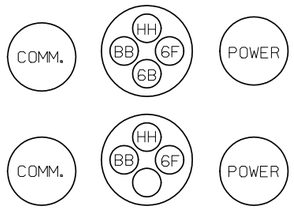

1-4" MULTIDUCT CONDUIT
AND
2-3" PVC CONDUIT

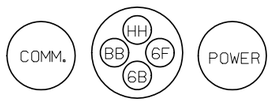

2-3" PVC CONDUITS

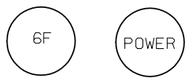

LEGEND

- HH - SINGLEMODE HUB TO HUB FIBER
- BB - SINGLEMODE BACKBONE FIBER
- 6F - 6-STRAND SINGLEMODE FIBER
- 6B - #6 AWG BARE (FOR TRACE)
- COMM. - COMMUNICATIONS (COMM CABLE, TELEPHONE AND TWISTED PAIR)

TYPICAL CONDUIT FILL DETAILS

STATE OF TEXAS
RAJESH N. GURNANI
86265
LICENSED
PROFESSIONAL ENGINEER

The seal appearing on this document was authorized by Rajesh N. Gurnani, P.E. 86265, on

_____,P.E.
Signature of Registrant & Date

Texas Department of Transportation
© 2008

"ITS" MISCELLANEOUS DETAILS SHEET

SHEET 1 OF 1

DESIGN	FED.RD. DIV.NO.	FEDERAL AID PROJECT NO.		HIGHWAY NO.
DK/LMT	6	CM	( )	IH 35E
GRAPHICS: DK	STATE	DISTRICT	COUNTY	SHEET NO.
CHECK: RNG	TEXAS	DALLAS	DALLAS	113
CHECK	CONTROL	SECTION	JOB	
	0442	02	143	

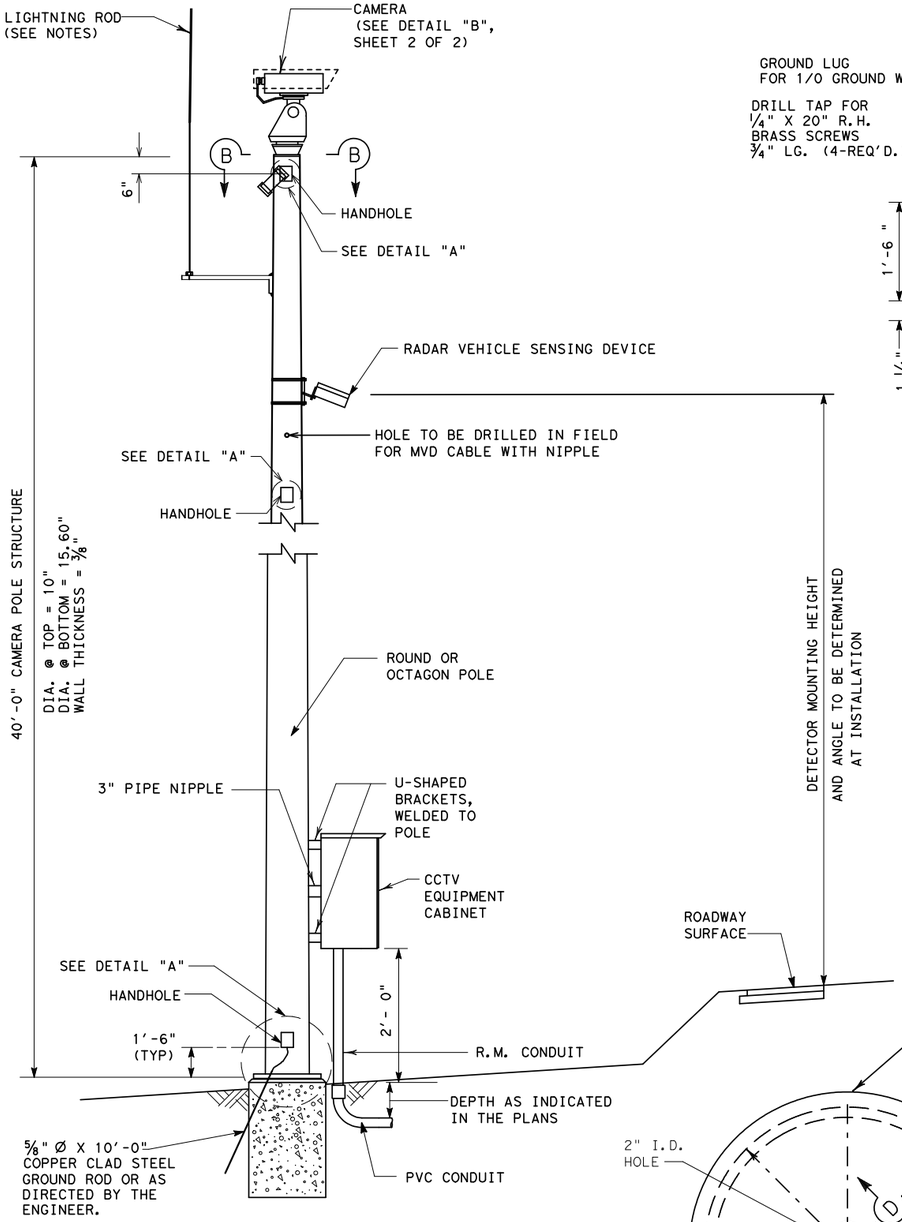

TYPICAL CAMERA POLE ELEVATION

NOTE: SEE "ITS" PLAN SHEETS FOR NUMBER, TYPE AND SIZE OF CONDUIT.
THE CONTRACTOR SHALL PERFORM A SITE SURVEY TO DETERMINE WHICH SIDE OF THE CAMERA POLE, THE CCTV EQUIPMENT CABINET, AND THE LIGHTNING ROD SUPPORT BAR SHALL BE MOUNTED.
THE CAMERA POLE SHALL BE MOUNTED SO THAT THE CCTV EQUIPMENT CABINET SHALL FACE THE HIGH SIDE OF THE GROUND SLOPE.
THE LIGHTNING ROD SUPPORT BAR SHALL BE MOUNTED ON THE SIDE OF THE POLE, AWAY FROM TRAFFIC.

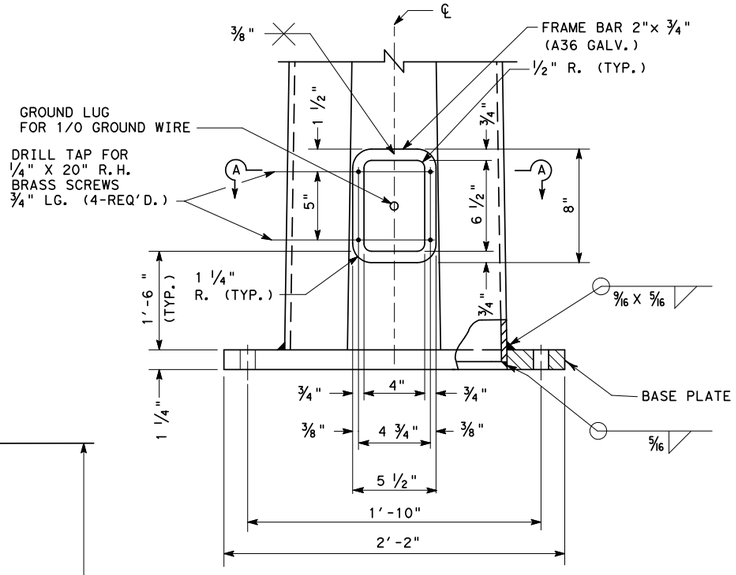

DETAIL A

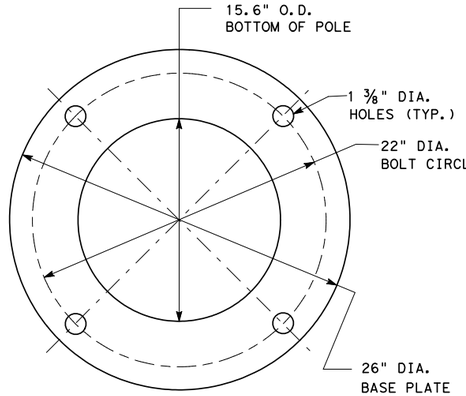

BASE PLATE PLAN

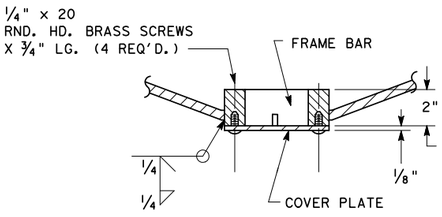

SECTION A-A

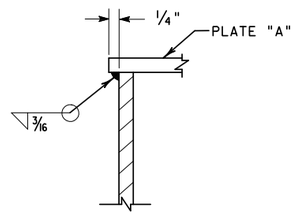

SECTION C-C

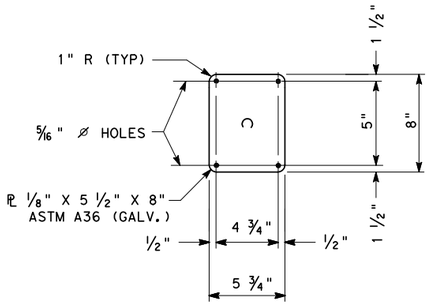

COVER PLATE DETAIL
(FOR HANDHOLE)
(A36 GALV.)

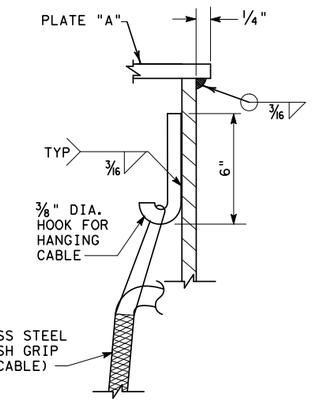

SECTION D-D

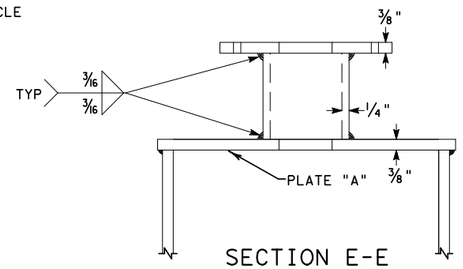

SECTION E-E

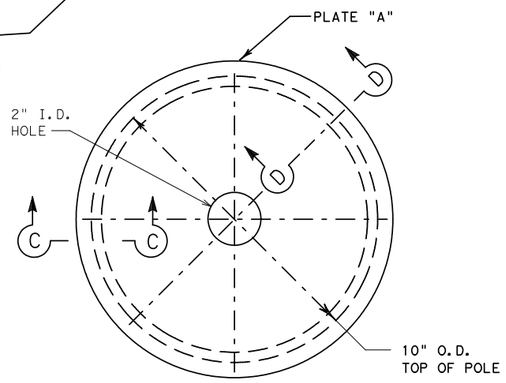

SECTION B-B

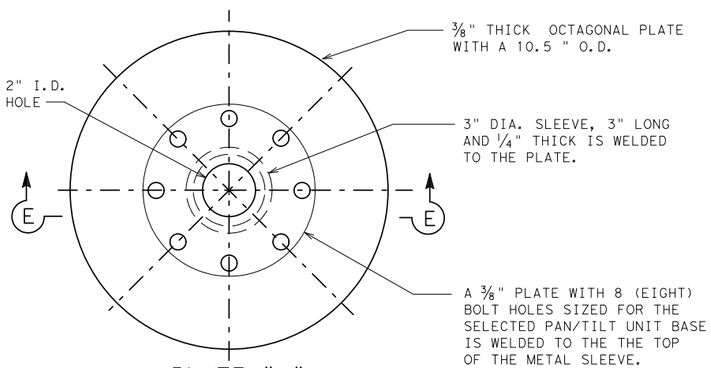

PLATE "A"

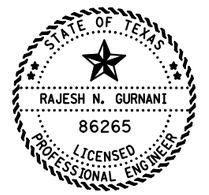

The seal appearing on this document was authorized by Rajesh N. Gurnani, P.E. 86265, on

_____, P.E.
Signature of Registrant & Date

Texas Department of Transportation
© 2008

CCTV CAMERA AND RVSD INSTALLATION DETAILS

SHEET 1 OF 2

DESIGN	FED.RD. DIV.NO.	FEDERAL AID PROJECT NO.		HIGHWAY NO.
DK/LMT	6	CM	( )	IH 35E
GRAPHICS: DK	STATE	DISTRICT	COUNTY	SHEET NO.
CHECK: RNG	TEXAS	DALLAS	DALLAS	102
CHECK	CONTROL	SECTION	JOB	
	0442	02	143	

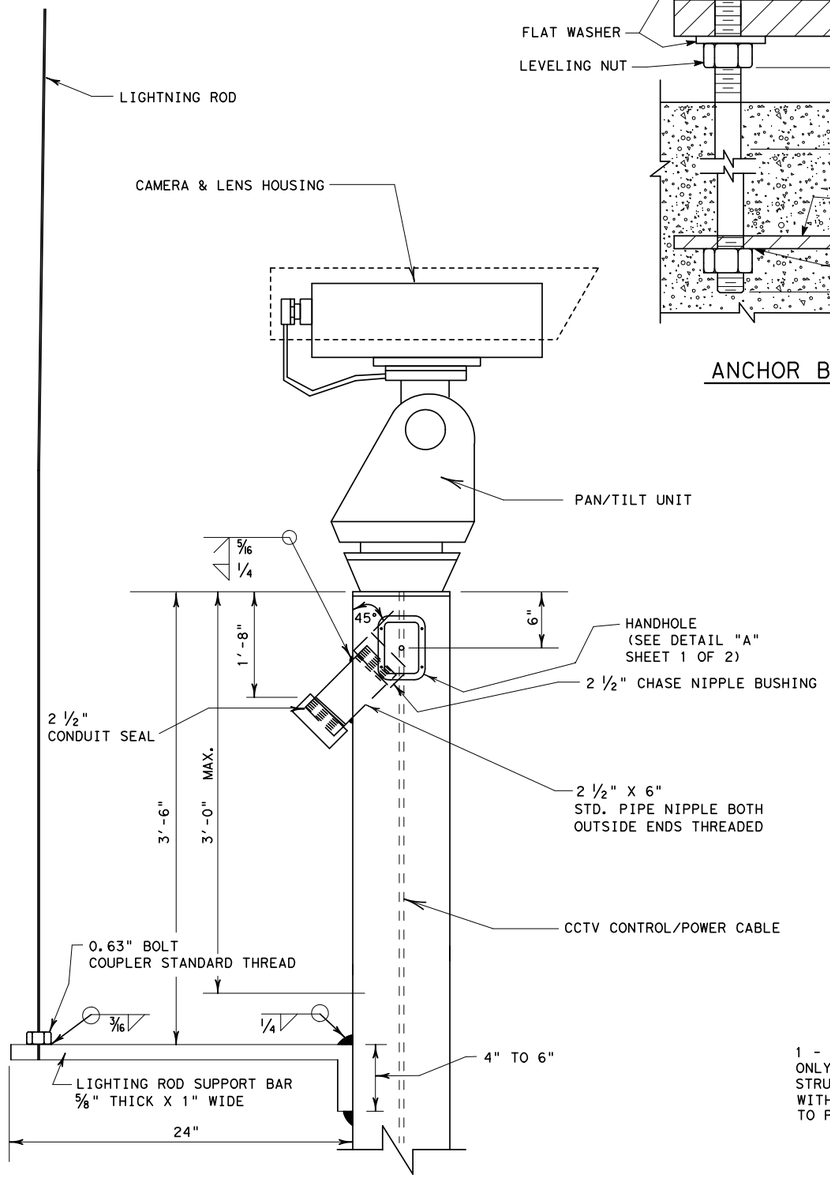

THE 2 1/2" STD. PIPE NIPPLE AND LIGHTNING ROD SUPPORT BAR SHALL BE MOUNTED PLUS OR MINUS 1 DEGREE HORIZONTAL DEFLECTION ON THE SAME SIDE OF THE POLE.

DETAIL B
TYPICAL

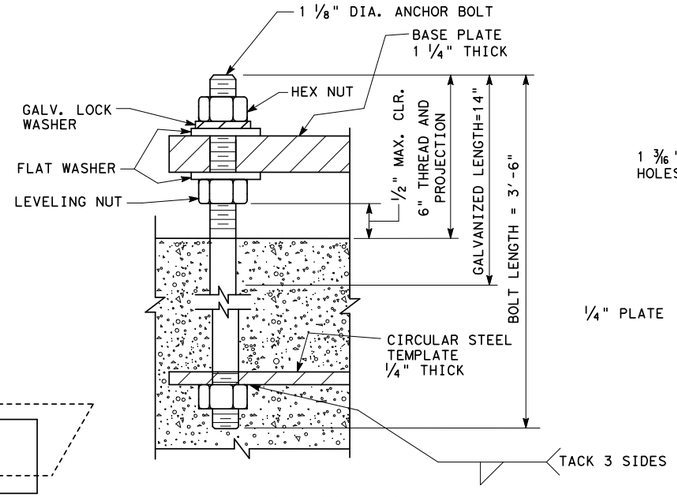

ANCHOR BOLT DETAIL

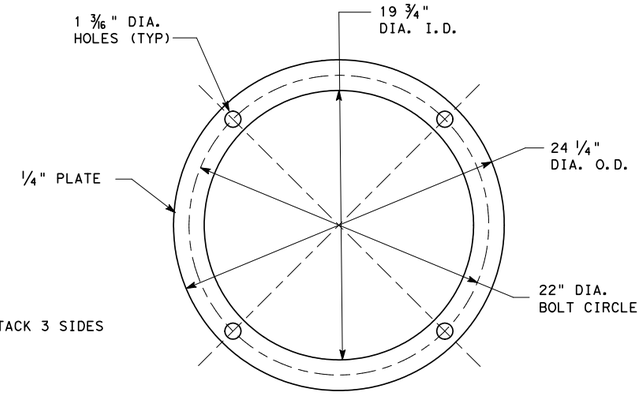

TOP AND BOTTOM
CIRCULAR STEEL TEMPLATE

NOTES:

DESIGN CONFORMS TO 1975 AASHTO STANDARD SPECIFICATIONS FOR STRUCTURAL SUPPORTS FOR HIGHWAY SIGNS, LUMINAIRES, AND TRAFFIC SIGNALS. DESIGN WIND SPEED EQUALS 80 MPH PLUS A 1.3 GUST FACTOR.
STRUCTURAL STEEL FOR THE POLE SHALL CONFORM TO ASTM A595 GR A OR ASTM 570 GR50 OR ASTM A607 GR50 OR ASTM A572 GR50 OR A36M50.
STRUCTURAL STEEL FOR PLATES SHALL CONFORM TO ASTM A36 OR A572 GR50 OR A595 GR A OR A36M5D.
FABRICATION AND WELDING OF STRUCTURES SHALL BE IN ACCORDANCE WITH ITEM "STEEL STRUCTURES". THE FABRICATOR SHALL SUBMIT PROPOSED WELDING PROCEDURES WITH THE SHOP DRAWINGS. THE SHOP DRAWINGS, WHEN SUBMITTED, SHALL INCLUDE THE WELDING PROCEDURE NUMBER ASSIGNED BY THE DIVISION OF MATERIALS AND TEST OF THE TEXAS DEPARTMENT OF TRANSPORTATION. THIS WELDING PROCEDURE NUMBER SHALL BE PLACED ADJACENT TO THE APPROPRIATE WELDING SYMBOL.
ANCHOR BOLTS SHALL CONFORM TO A-193 B7. NUTS FOR ANCHOR BOLTS SHALL BE HEAVY HEX AND CONFORM TO ASTM A-194 GR 2H. THE TOP 14 INCHES OF THE ANCHOR BOLT AND NUTS AND WASHERS SHALL BE GALVANIZED. UNLESS OTHERWISE NOTED, ALL PARTS SHALL BE GALVANIZED IN ACCORDANCE WITH THE SPECIFICATIONS.
REINFORCING STEEL SHALL CONFORM TO ITEM 440.
ALL REINFORCING STEEL SHALL BE MINIMUM GRADE 60.
CONCRETE SHALL BE CLASS C.
THE CONTRACTOR SHALL FIELD VERIFY ALL ANCHOR BOLT MEASUREMENTS PRIOR TO FABRICATION OF BASE PLATES.
THE CONTRACTOR SHALL CLEAN ALL ABRASIONS AND FIELD WELDS WITH A WIRE BRUSH AND SHALL APPLY TWO COATS OF ZINC RICH PAINT TO THE UNGALVANIZED AREAS OF THE STRUCTURE.
THE CONTRACTOR SHALL HANG ALL CABLING INSIDE CAMERA POLE STRUCTURE WITH STAINLESS STEEL WIRE MESH GRIPS.

BOLT POSITIONING IN THE TOP PLATE FOR THE PAN/TILT BASE WILL BE DETERMINED IN THE FIELD. THE 8 (EIGHT) BOLT HOLES REQUIRED WILL ALLOW POSITIONING OF THE LIMIT SWITCH SO THAT THE CAMERA BLIND ZONE IS PROPERLY LOCATED. THE ENGINEER WILL DETERMINE THE CAMERA'S BLIND ZONE AT EACH LOCATION.

A LIGHTNING ROD SHALL BE PROVIDED ON THE POLE AND SHALL MEET THE FOLLOWING REQUIREMENTS.
A. POSITION - IN CENTER OF LEAST UTILIZED FIELD OF VIEW.
B. HEIGHT - CAMERA EQUIPMENT TO BE WITHIN 30 DEGREE PROTECTIVE ZONE TERMINAL.
C. CONDUCTIVITY - EQUIVALENT TO #6 AWG COPPER CONDUCTOR.
D. CLEARANCE - 24" TO CLOSEST CAMERA APPROACH.
E. BONDING - POLE-LIGHTNING ROD TO BE WELDED OR EQUIVALENT CLAMPING.
F. CONFIGURATION - MAXIMUM RADIUS BENDS TO BE EMPLOYED.
G. STRUCTURE - WITHSTAND ENVIRONMENT WITHOUT VIBRATION.

THE CONTRACTOR SHALL FURNISH ALL MATERIALS NECESSARY TO INSTALL THE CCTV CAMERA POLE. SUCH WORK SHALL BE PAID FOR UNDER THE ITEM "CAMERA POLE STRUCTURE WITH CABINET."

THE CAMERA POLE SHALL BE FABRICATED AS EITHER A ROUND OR OCTAGONAL TUBE.

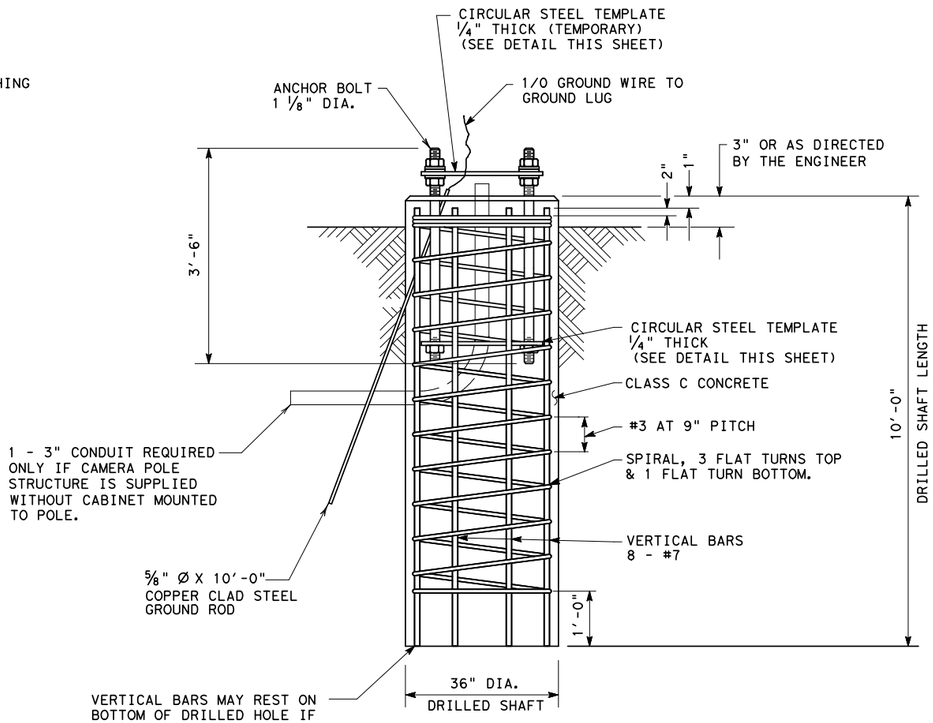

FOUNDATION DETAILS
ELEVATION

STATE OF TEXAS
RAJESH N. GURNANI
86265
LICENSED
PROFESSIONAL ENGINEER

The seal appearing on this document was authorized by Rajesh N. Gurnani, P.E. 86265, on

_____, P.E.
Signature of Registrant & Date

Texas Department of Transportation
© 2008

CCTV CAMERA AND RVSD INSTALLATION DETAILS

SHEET 2 OF 2

DESIGN	FED.RD. DIV.NO.	FEDERAL AID PROJECT NO.		HIGHWAY NO.
DK/LMT	6	CM	( )	IH 35E
GRAPHICS	STATE	DISTRICT	COUNTY	SHEET NO.
DK	TEXAS	DALLAS	DALLAS	103
CHECK	CONTROL	SECTION	JOB	
RNG	0442	02	143	
CHECK				

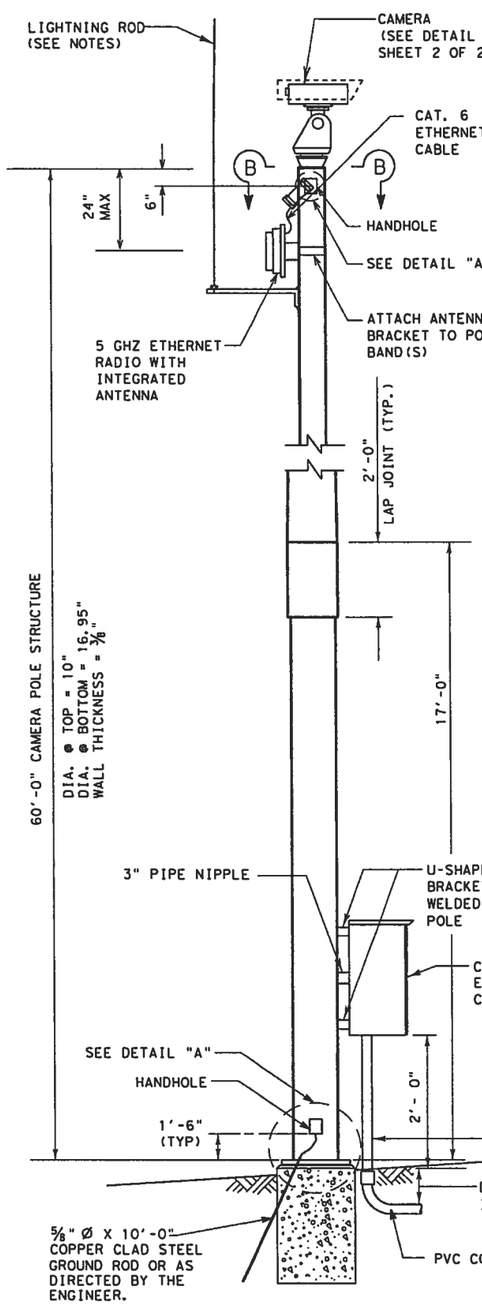

TYPICAL CAMERA POLE ELEVATION

NOTE: SEE "ITS" PLAN SHEETS FOR NUMBER, TYPE AND SIZE OF CONDUIT.
THE CONTRACTOR SHALL PERFORM A SITE SURVEY TO DETERMINE WHICH SIDE OF THE CAMERA POLE, THE CCTV EQUIPMENT CABINET, AND THE LIGHTNING ROD SUPPORT BAR SHALL BE MOUNTED.
THE CAMERA POLE SHALL BE MOUNTED SO THAT THE CCTV EQUIPMENT CABINET SHALL FACE THE HIGH SIDE OF THE GROUND SLOPE.
THE LIGHTNING ROD SUPPORT BAR SHALL BE MOUNTED ON THE SIDE OF THE POLE, AWAY FROM TRAFFIC.

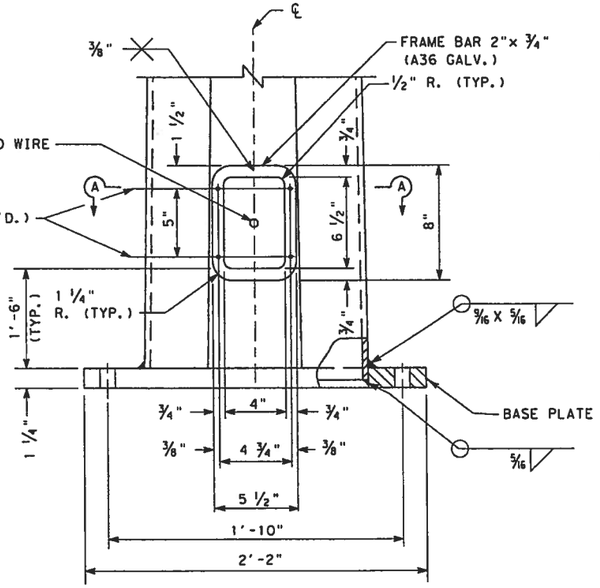

DETAIL "A"

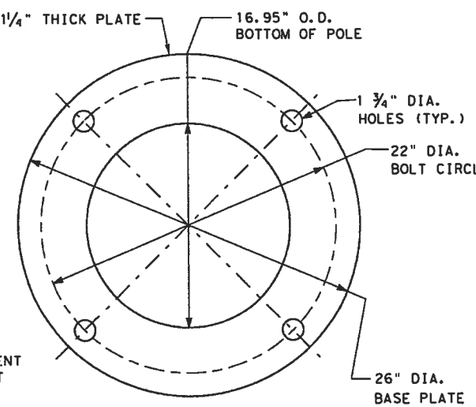

BASE PLATE PLAN

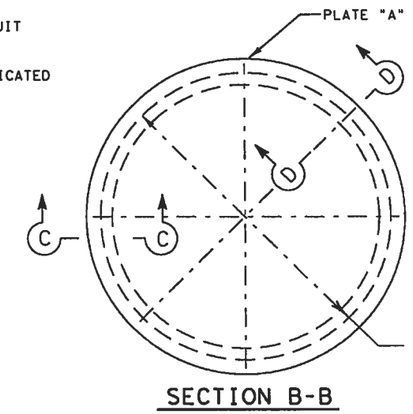

SECTION B-B

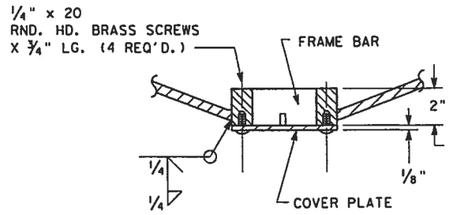

SECTION A-A

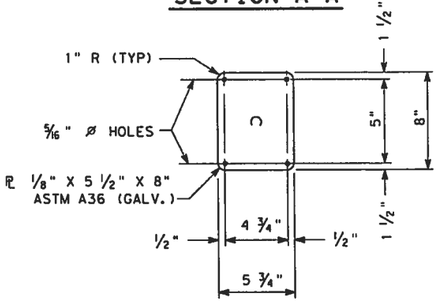

COVER PLATE DETAIL
(FOR HANDHOLE)
(A36 GALV.)

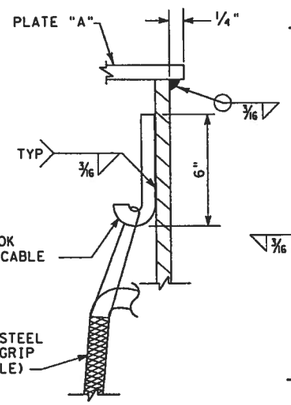

SECTION D-D

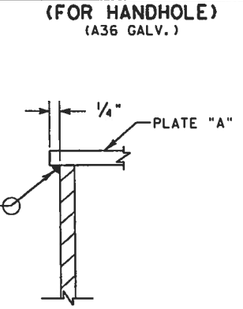

SECTION C-C

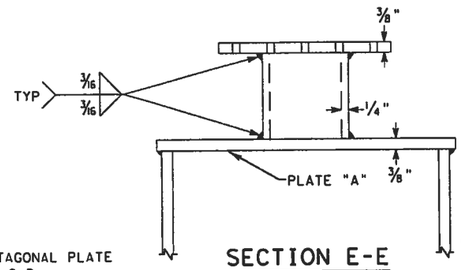

SECTION E-E

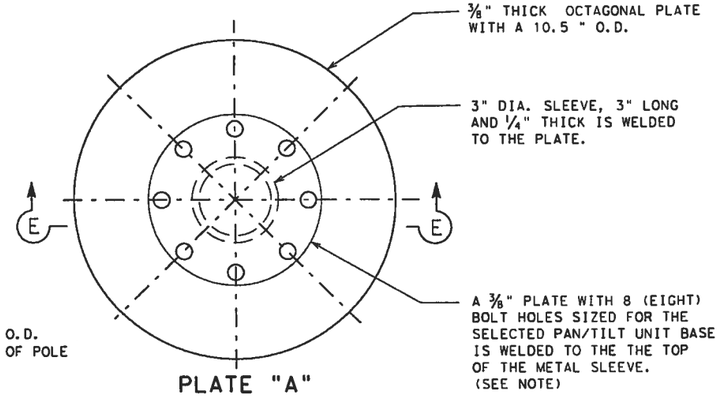

PLATE "A"

NOTES:

DESIGN CONFORMS TO 1975 AASHTO STANDARD SPECIFICATIONS FOR STRUCTURAL SUPPORTS FOR HIGHWAY SIGNS, LUMINAIRES, AND TRAFFIC SIGNALS. DESIGN WIND SPEED EQUALS 80 MPH PLUS A 1.3 GUST FACTOR.
STRUCTURAL STEEL FOR THE POLE SHALL CONFORM TO ASTM A595 GR A OR ASTM 570 GR50 OR ASTM A607 GR50 OR ASTM A572 GR50 OR A36M50.
STRUCTURAL STEEL FOR PLATES SHALL CONFORM TO ASTM A36 OR A572 GR50 OR A595 GR A OR A36M5D.
FABRICATION AND WELDING OF STRUCTURES SHALL BE IN ACCORDANCE WITH ITEM "STEEL STRUCTURES". THE FABRICATOR SHALL SUBMIT PROPOSED WELDING PROCEDURES WITH THE SHOP DRAWINGS. THE SHOP DRAWINGS, WHEN SUBMITTED, SHALL INCLUDE THE WELDING PROCEDURE NUMBER ASSIGNED BY THE DIVISION OF MATERIALS AND TEST OF THE TEXAS DEPARTMENT OF TRANSPORTATION. THIS WELDING PROCEDURE NUMBER SHALL BE PLACED ADJACENT TO THE APPROPRIATE WELDING SYMBOL.
ANCHOR BOLTS SHALL CONFORM TO A-193 B7. NUTS FOR ANCHOR BOLTS SHALL BE HEAVY HEX AND CONFORM TO ASTM A-194 GR 2H. THE TOP 14 INCHES OF THE ANCHOR BOLT AND NUTS AND WASHERS SHALL BE GALVANIZED. UNLESS OTHERWISE NOTED, ALL PARTS SHALL BE GALVANIZED IN ACCORDANCE WITH THE SPECIFICATIONS.
REINFORCING STEEL SHALL CONFORM TO ITEM 440.
ALL REINFORCING STEEL SHALL BE MINIMUM GRADE 60.
CONCRETE SHALL BE CLASS C.
THE CONTRACTOR SHALL FIELD VERIFY ALL ANCHOR BOLT MEASUREMENTS PRIOR TO FABRICATION OF BASE PLATES.
THE CONTRACTOR SHALL CLEAN ALL ABRASIONS AND FIELD WELDS WITH A WIRE BRUSH AND SHALL APPLY TWO COATS OF ZINC RICH PAINT TO THE UNGALVANIZED AREAS OF THE STRUCTURE.
THE CONTRACTOR SHALL HANG ALL CABLING INSIDE CAMERA POLE STRUCTURE WITH STAINLESS STEEL WIRE MESH GRIPS.

A LIGHTNING ROD SHALL BE PROVIDED ON THE POLE AND SHALL MEET THE FOLLOWING REQUIREMENTS.
A. POSITION - IN CENTER OF LEAST UTILIZED FIELD OF VIEW.
B. HEIGHT - CAMERA EQUIPMENT TO BE WITHIN 30 DEGREE PROTECTIVE ZONE TERMINAL.
C. CONDUCTIVITY - EQUIVALENT TO #6 AWG COPPER CONDUCTOR.
D. CLEARANCE - 24" TO CLOSEST CAMERA APPROACH.
E. BONDING - POLE-LIGHTNING ROD TO BE WELDED OR EQUIVALENT CLAMPING.
F. CONFIGURATION - MAXIMUM RADIUS BENDS TO BE EMPLOYED.
G. STRUCTURE - WITHSTAND ENVIRONMENT WITHOUT VIBRATION.

THE CONTRACTOR SHALL FURNISH ALL MATERIALS NECESSARY TO INSTALL THE CCTV CAMERA POLE. SUCH WORK SHALL BE PAID FOR UNDER THE ITEM "CAMERA POLE STRUCTURE WITH CABINET."

THE CAMERA POLE SHALL BE FABRICATED AS EITHER A ROUND OR OCTAGONAL TUBE.

1/13/12
STATE OF TEXAS
ALAN P. McNEIL
69951
REGISTERED PROFESSIONAL ENGINEER
Alan P. McNeil

Texas Department of Transportation
© 2012

60 FT. CCTV CAMERA POLE INSTALLATION DETAILS

SHEET 1 OF 2

DESIGN	FED. RD. DIV. NO.	FEDERAL AID PROJECT NO.		HIGHWAY NO.
DK	6	(SEE TITLE SHEET)		IH 45
GRAPHICS	STATE	DISTRICT	COUNTY	SHEET NO.
DK	TEXAS	DALLAS	DALLAS	51
CHECK	CONTROL	SECTION	JOB	
RAC	0092	14	079	
CHECK				
APM				

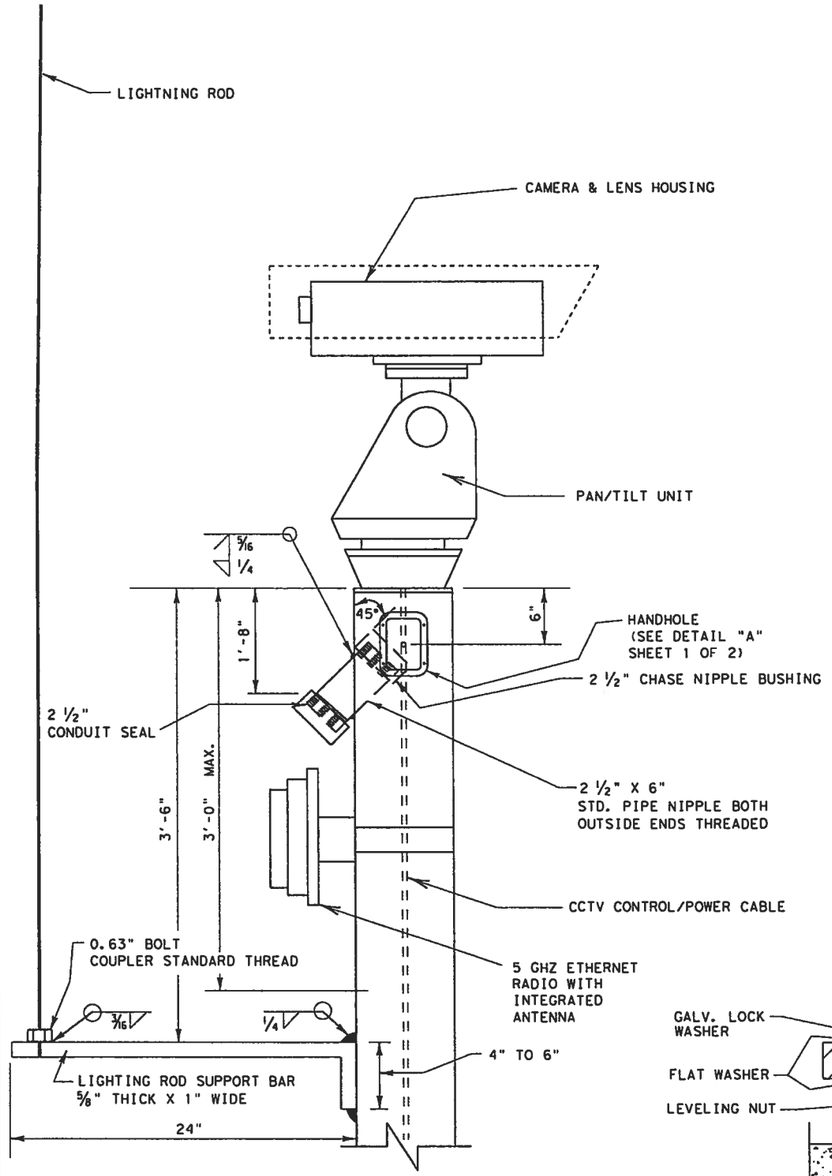

THE 2 1/2" STD. PIPE NIPPLE AND LIGHTNING ROD SUPPORT BAR SHALL BE MOUNTED PLUS OR MINUS 1 DEGREE HORIZONTAL DEFLECTION ON THE SAME SIDE OF THE POLE.

DETAIL B
TYPICAL

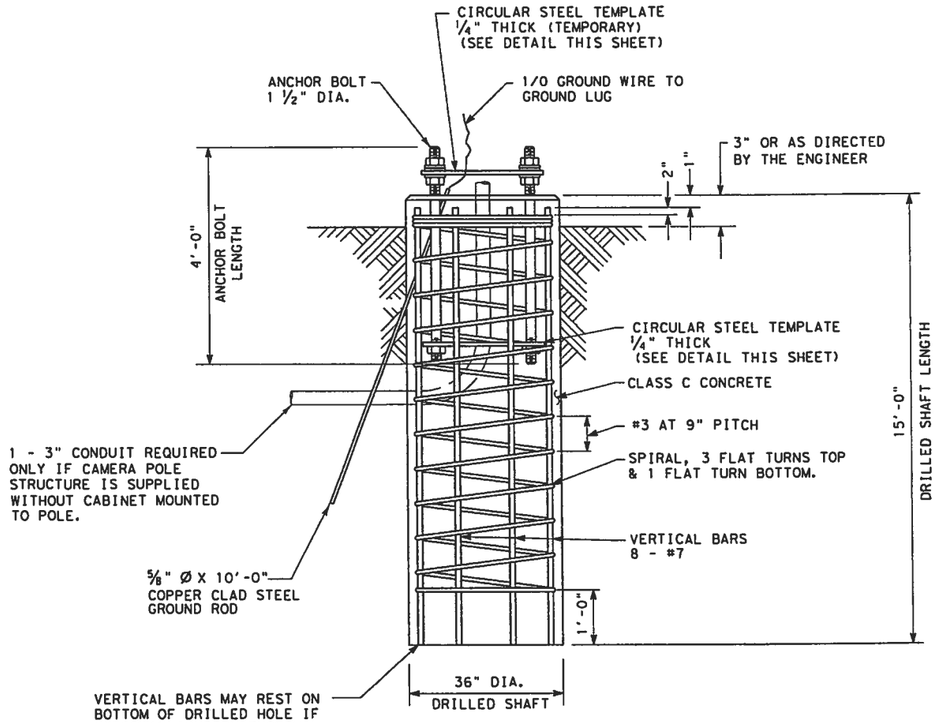

FOUNDATION DETAILS
ELEVATION

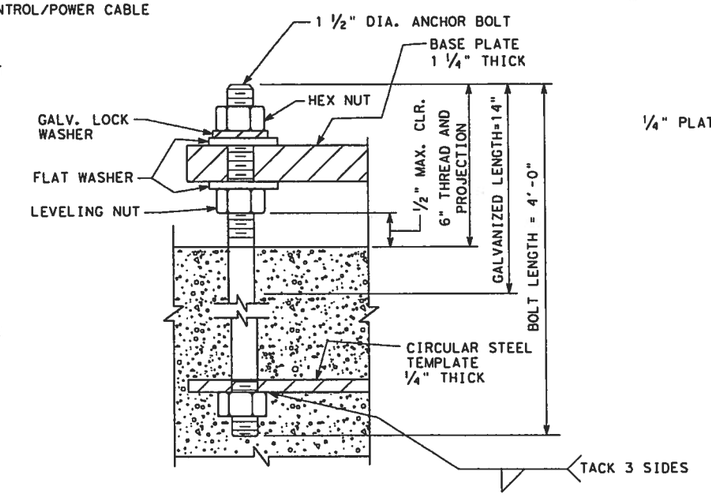

ANCHOR BOLT DETAIL

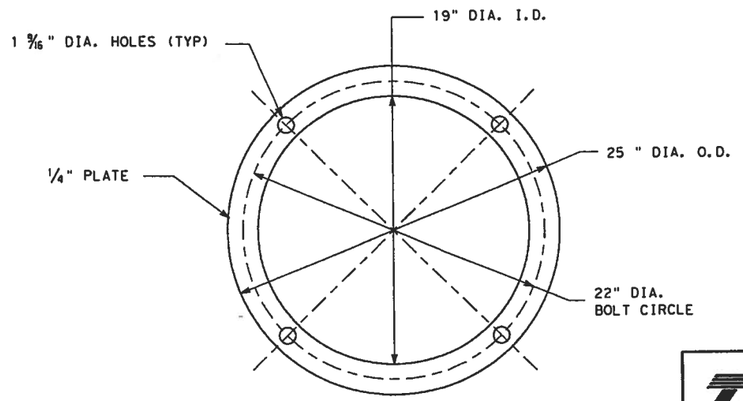

TOP AND BOTTOM
CIRCULAR STEEL TEMPLATE

1/13/12

STATE OF TEXAS
ALAN P. McNEIL
69951
REGISTERED
PROFESSIONAL ENGINEER

Alan P. McNeil

Texas Department of Transportation
© 2012

60 FT. CCTV CAMERA POLE INSTALLATION DETAILS

SHEET 2 OF 2

DESIGN	FED. RD. DIV. NO.	FEDERAL AID PROJECT NO.		HIGHWAY NO.
DK	6	(SEE TITLE SHEET)		IH 45
GRAPHICS	STATE	DISTRICT	COUNTY	SHEET NO.
DK	TEXAS	DALLAS	DALLAS	52
CHECK	CONTROL	SECTION	JOB	
RAC	0092	14	079	
CHECK				
APM				

U:\GDATA\LOOP 12\ITS STANDARDS\LOOP 12 DMS~ INETA.DGN

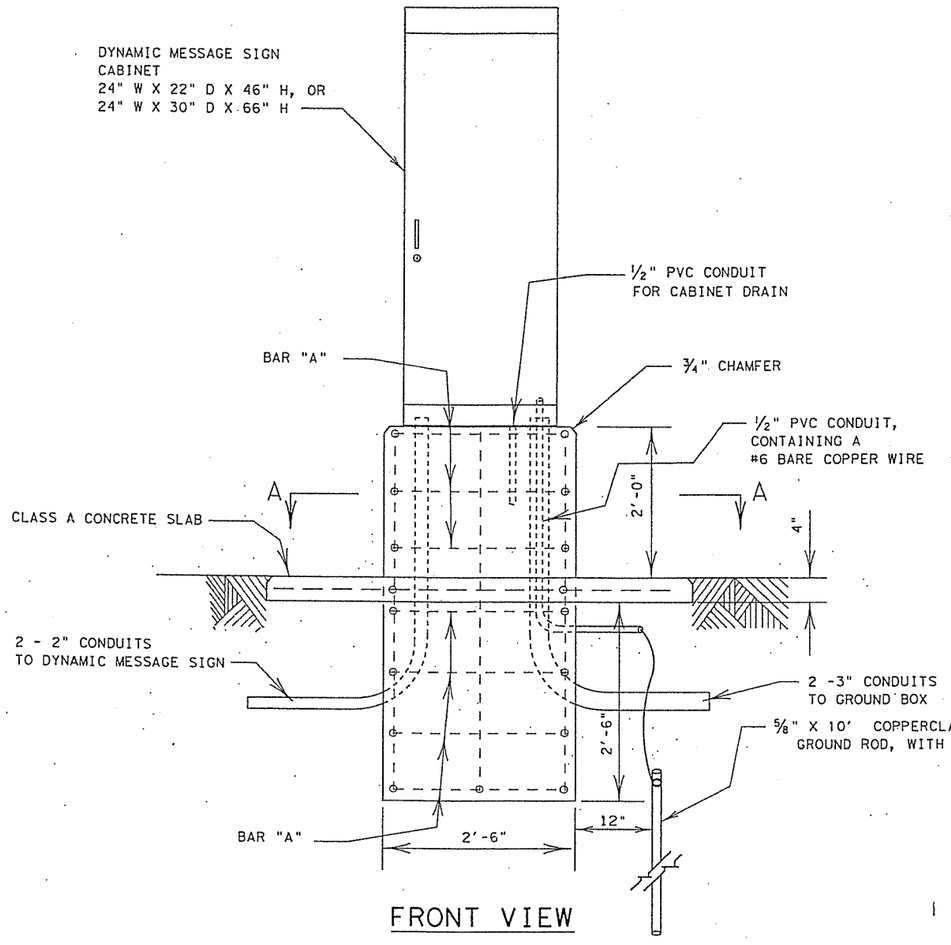

FRONT VIEW

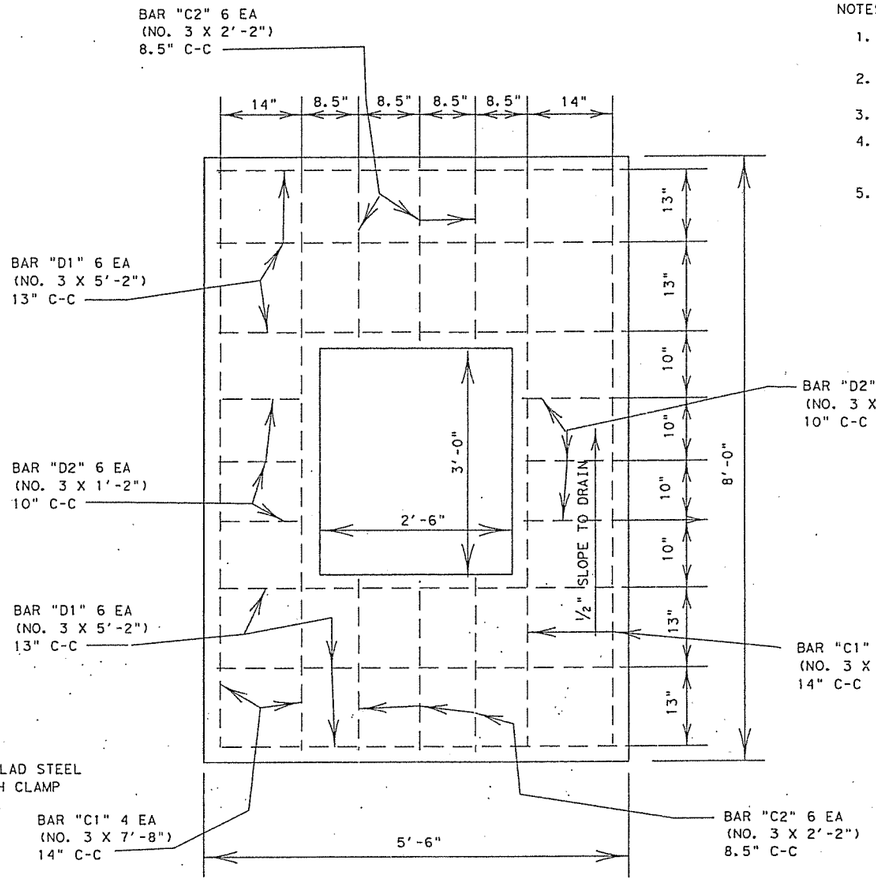

SLAB

NOTES:

1. DETAILS OF ANCHOR BOLT PATTERN TO BE FURNISHED BY THE CABINET MANUFACTURER.
2. DIMENSIONS SHOWN FOR CONCRETE BASE WILL BE SUBJECT TO MODIFICATION TO FIT REQUIRED CABINET TYPE.
3. ALL CONCRETE WILL BE CLASS "A".
4. THE CONTRACTOR IS TO SET THE CABINET FOUNDATION LEVEL WITH THE GROUND SURFACE, OR AS APPROVED BY THE ENGINEER.
5. THE CONTRACTOR WILL FURNISH ANY ADDITIONAL CONCRETE WHICH MAY BE NECESSARY TO STABILIZE FOUNDATION AT UNUSUAL LOCATIONS.

BAR	NO. BARS	SIZE	LENGTH	SPACING
A	7	NO. 5	10'-8"	9" C-C
B	8	NO. 5	4'-6"	VARIES
C1	4	NO. 3	7'-8"	14" C-C
C2	6	NO. 3	2'-2"	8.5" C-C
D1	6	NO. 3	5'-2"	13" C-C
D2	6	NO. 3	1'-2"	10" C-C

PROVIDE 2" MIN. COVER FOR TOP OR SIDES

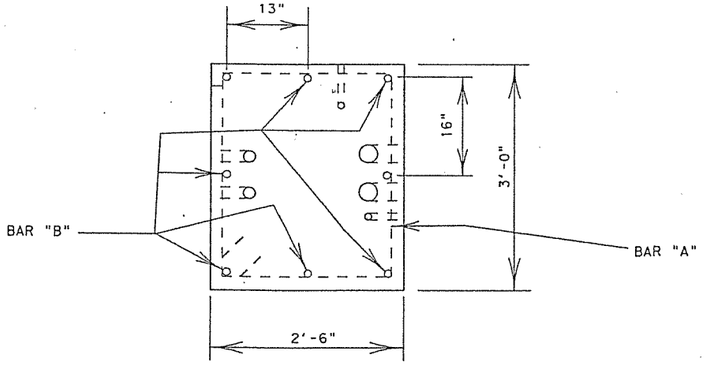

SECTION A-A

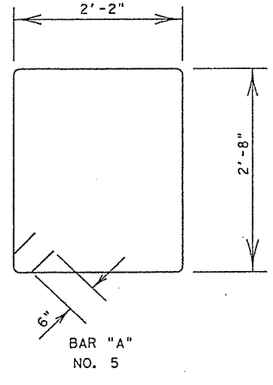

NOT TO SCALE

STATE OF TEXAS
RAJESH N. GURNANI
86265
REGISTERED PROFESSIONAL ENGINEER

The seal appearing on this document was authorized by Rajesh N. Gurnani P.E. 86265, on

05/01/07

Signature of Registrant & Date, P.E.

Texas Department of Transportation
© 2007

DYNAMIC MESSAGE SIGN CABINET FOUNDATION DETAIL SHEET

DESIGN	FED. RD. DIV. NO.	FEDERAL AID PROJECT NO.		HIGHWAY NO.
MF	6	CM 2007 (520)		LOOP 12
GRAPHICS MF	STATE	DISTRICT	COUNTY	SHEET NO.
CHECK	TEXAS	DALLAS	DALLAS	138A
CHECK	CONTROL	SECTION	JOB	
	0581	02	114	

IH30 DMS BASE PLATE.DGN

ANCHOR BOLT DIA.	SLOTTED HOLE WIDTH	SLOTTED HOLE LENGTH
2"	2- 1/16 "	5-7/16"
2- 1/4 "	2- 5/16 "	5-7/16"

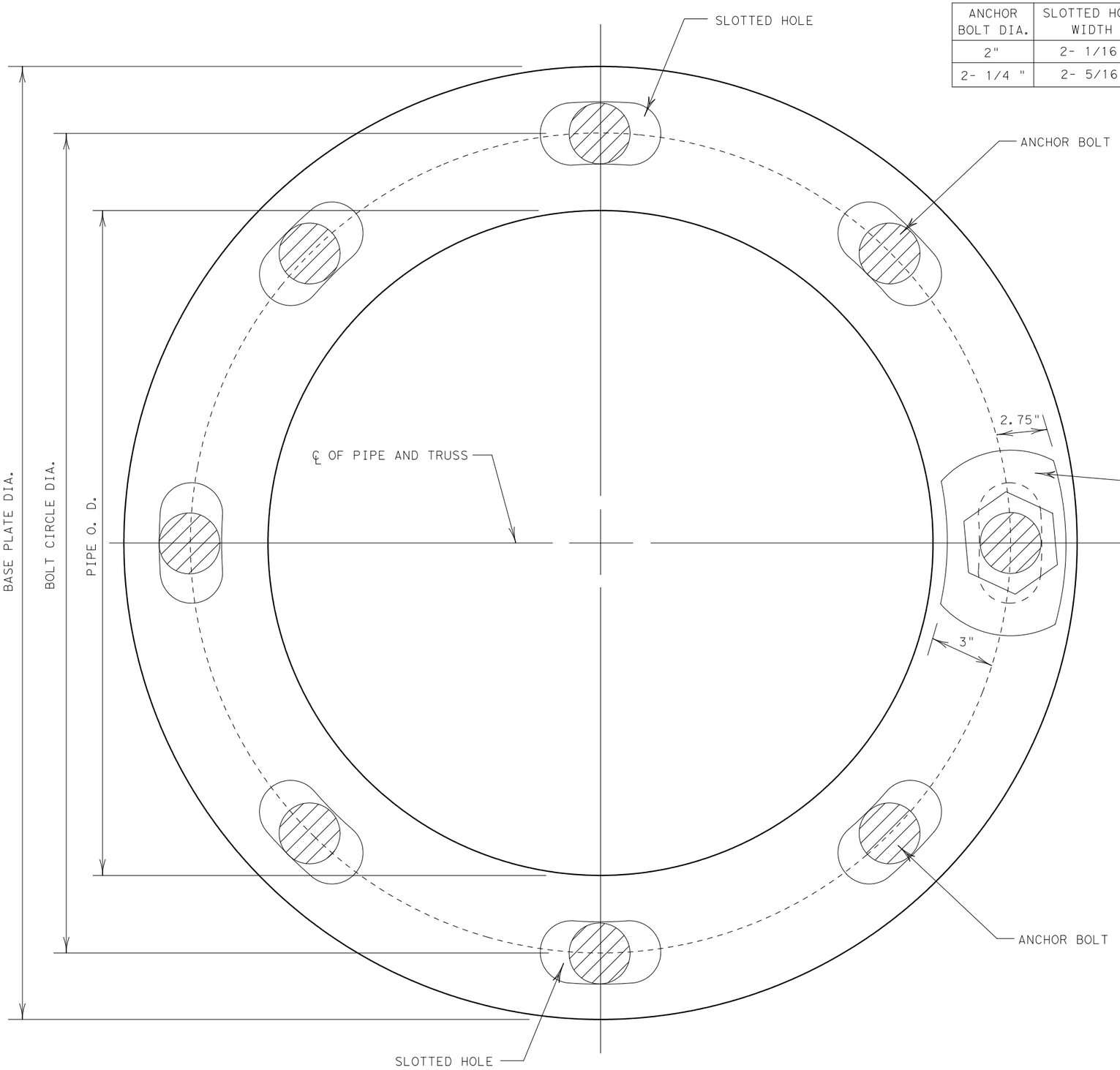

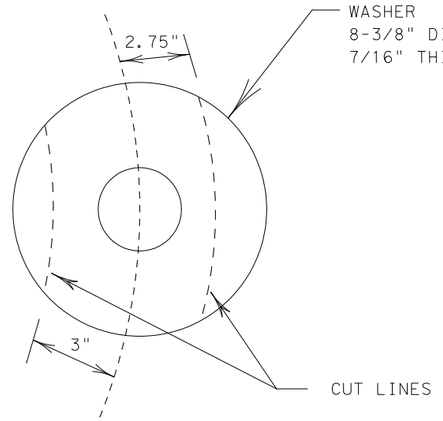

WASHER DETAILS

EACH WASHER SHALL BE CONSTRUCTED OF A SINGLE PIECE OF THE SAME STRUCTURAL GRADE MATERIAL AS THE BASE PLATE. WASHER SHALL BE PLACED ON THE TOP AND BOTTOM OF THE BASE PLATE ON EACH ANCHOR BOLT.

NOTES:

WASHER SHALL COVER THE SLOTTED HOLE AT ALL TIMES, NO MATTER THE POSITION OF THE TOWER PIPE.
THE SLOTTED HOLES SHOULD BE CONCENTRIC TO THE BOLT CIRCLE.
THE ROTATION ALLOWED WILL BE ABOUT 3 DEGREES EACH WAY FROM SLOT CENTER.

STATE OF TEXAS
RAJESH N. GURNANI
86265
REGISTERED PROFESSIONAL ENGINEER

The seal appearing on this document was authorized by Rajesh N. Gurnani, P.E. 86265, on

,P.E.
Signature of Registrant & Date

Texas Department of Transportation
© 2008

BASE PLATE SLOTTED HOLE AND BOLT DIAGRAM

DESIGN	FED.RD. DIV.NO.	FEDERAL AID PROJECT NO.		HIGHWAY NO.
DK/LMT	6	CM ( )		IH 35E
GRAPHICS: DK	STATE	DISTRICT	COUNTY	SHEET NO.
CHECK: RNG	TEXAS	DALLAS	DALLAS	100
CHECK	CONTROL	SECTION	JOB	
	0442	02	143	

U:\ENGDATA\LOOP 12\ITS STANDARDS\LOOP 12 DMS CABINETA.DGN

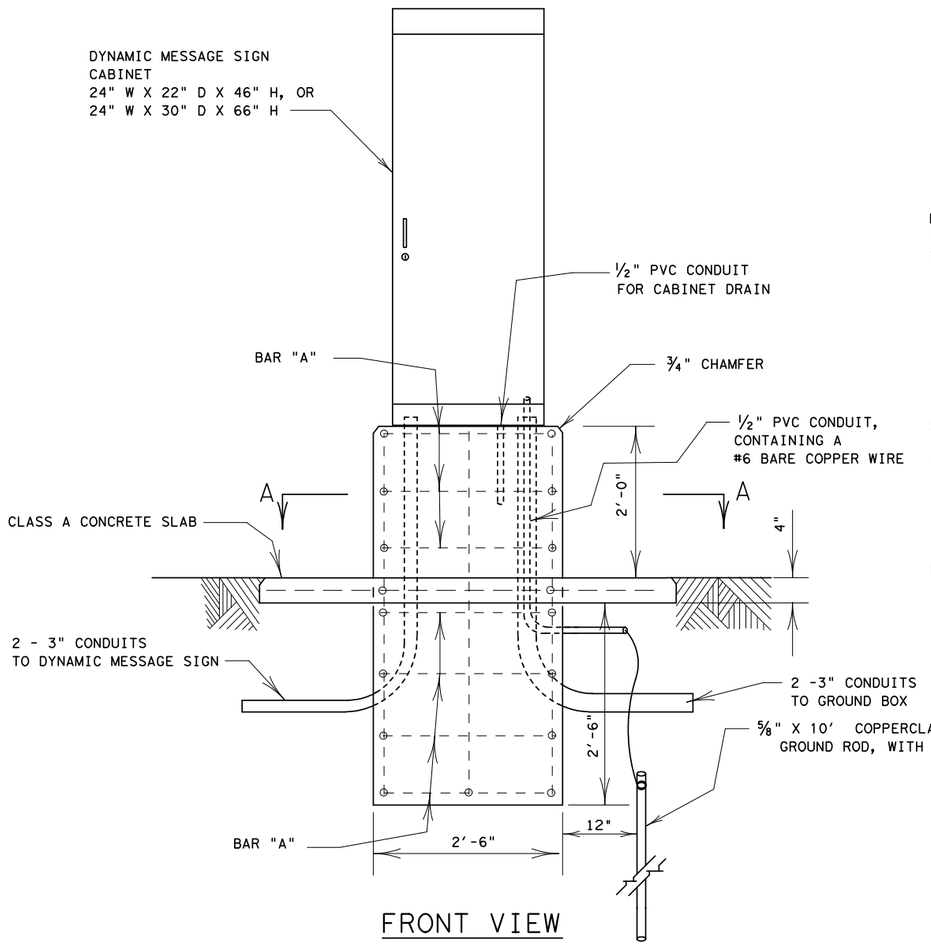

FRONT VIEW

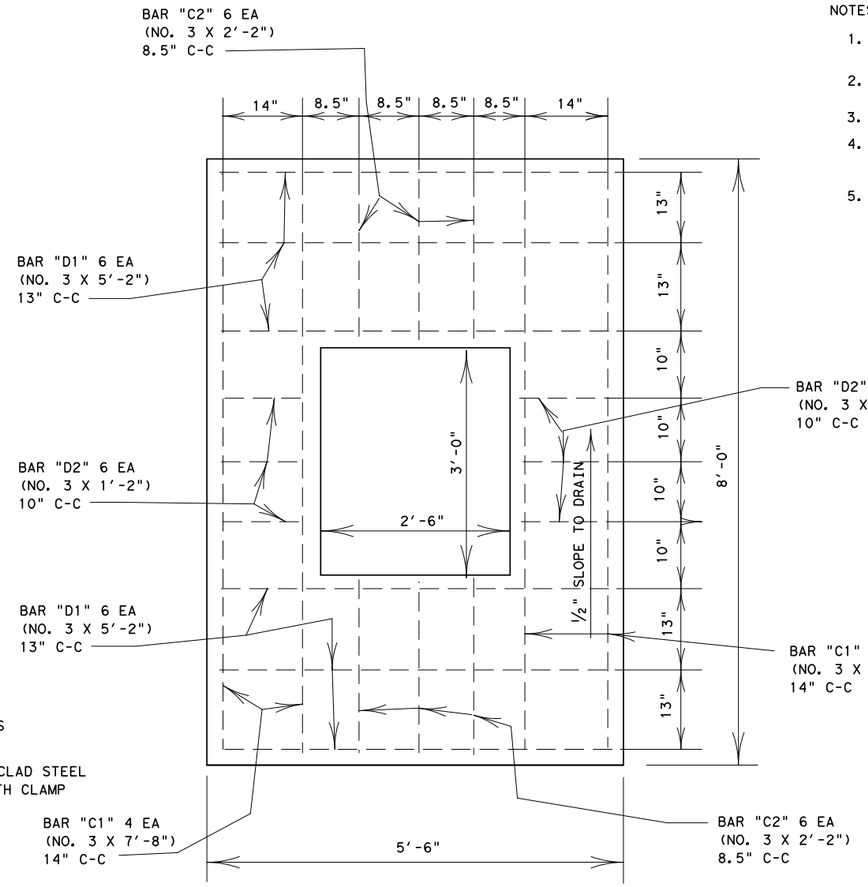

SLAB

NOTES:

1. DETAILS OF ANCHOR BOLT PATTERN TO BE FURNISHED BY THE CABINET MANUFACTURER.
2. DIMENSIONS SHOWN FOR CONCRETE BASE WILL BE SUBJECT TO MODIFICATION TO FIT REQUIRED CABINET TYPE.
3. ALL CONCRETE WILL BE CLASS "A".
4. THE CONTRACTOR IS TO SET THE CABINET FOUNDATION LEVEL WITH THE GROUND SURFACE, OR AS APPROVED BY THE ENGINEER.
5. THE CONTRACTOR WILL FURNISH ANY ADDITIONAL CONCRETE WHICH MAY BE NECESSARY TO STABILIZE FOUNDATION AT UNUSUAL LOCATIONS.

BAR	NO. BARS	SIZE	LENGTH	SPACING
A	7	NO. 5	10'-8"	9" C-C
B	8	NO. 5	4'-6"	VARIES
C1	4	NO. 3	7'-8"	14" C-C
C2	6	NO. 3	2'-2"	8.5" C-C
D1	6	NO. 3	5'-2"	13" C-C
D2	6	NO. 3	1'-2"	10" C-C

PROVIDE 2" MIN. COVER FOR TOP OR SIDES

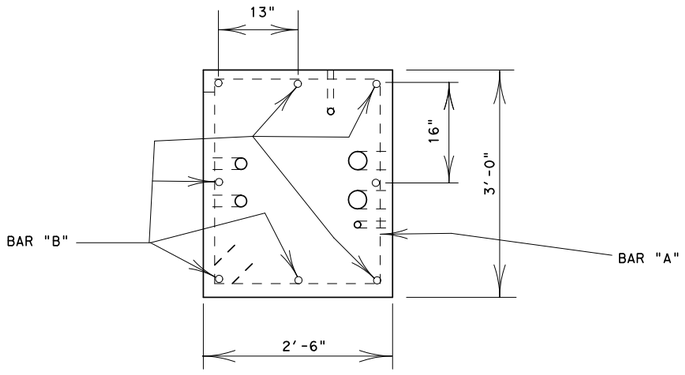

SECTION A-A

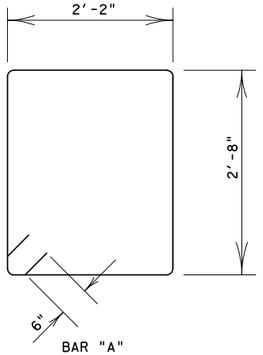

NOT TO SCALE

STATE OF TEXAS
RAJESH N. GURNANI
86265
REGISTERED PROFESSIONAL ENGINEER

The seal appearing on this document was authorized by Rajesh N. Gurnani P.E. 86265, on

,P.E.
Signature of Registrant & Date

Texas Department of Transportation
© 2008

DYNAMIC MESSAGE SIGN CABINET FOUNDATION DETAIL SHEET

DESIGN	FED.RD. DIV.NO.	FEDERAL AID PROJECT NO.		HIGHWAY NO.
DK/LMT	6	CM	( )	IH 35E
GRAPHICS	STATE	DISTRICT	COUNTY	SHEET NO.
DK	TEXAS	DALLAS	DALLAS	101
CHECK	CONTROL	SECTION	JOB	
RNG	0442	02	143	
CHECK				

USER ID

NOTES

1. MATERIAL - 5052-H32, 0.1875" ALUMINUM.
2. OUTER DIMENSIONS ARE ± 2"
3. ALL DIMENSIONS ARE IN INCHES.
4. ALL REQUIRED TEXT SHALL BE SILK SCREENED.
5. SERVICE TO THE CABINET SHALL BE 120/240 VAC 3-WIRE SINGLE PHASE.

   AT THE POWER PANEL, SERVICE SHALL BE SEPARATED INTO TWO (2) 120 VAC, 2-WIRE SINGLE PHASE LINES. EACH 120 VAC LINE SHALL BE PROTECTED BY A LINE FILTER AND LIGHTNING ARRESTOR.

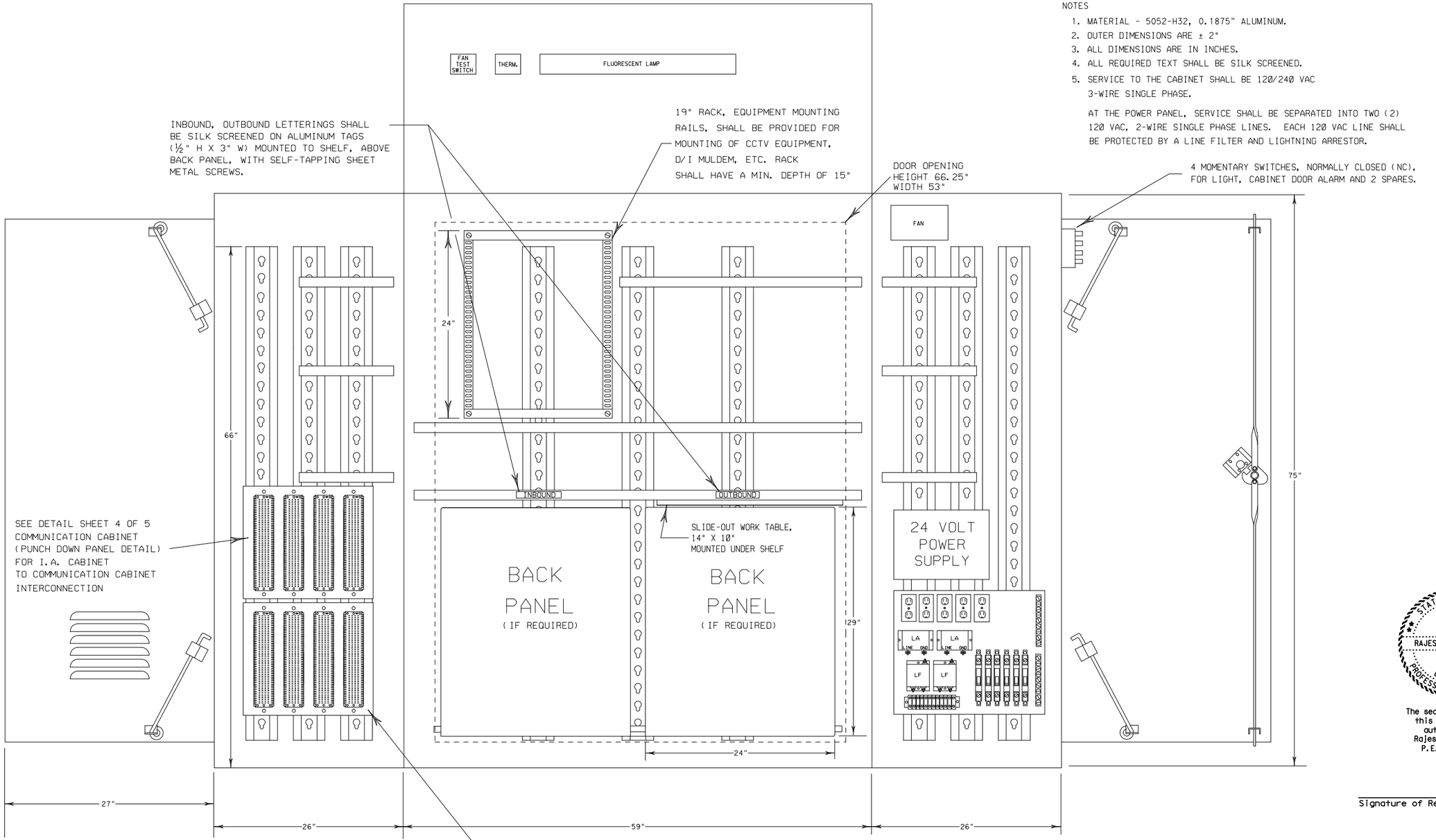

COMMUNICATION CABINET (EXPLODED DETAIL)

STATE OF TEXAS
RAJESH N. GURNANI
86265
LICENSED PROFESSIONAL ENGINEER

The seal appearing on this document was authorized by Rajesh N. Gurnani, P.E. 86265, on

_____, P.E.
Signature of Registrant & Date

Texas Department of Transportation
© 2008

COMMUNICATION CABINET DETAILS

SCALE: N/A SHEET 2 OF 5

DESIGN	FED.RD. DIV.NO.	FEDERAL AID PROJECT NO.		HIGHWAY NO.
GRAPHICS	6	(See Title Sheet)		IH 35E
	STATE	DISTRICT	COUNTY	SHEET NO.
CHECK RNG	TEXAS	DALLAS	DALLAS	105
CHECK	CONTROL	SECTION	JOB	
	0442	02	143	

TEMPLATED REVISED: 10-23-02

DATE:$DATE$

USER ID

0.125" (3 mm) ALUMINUM

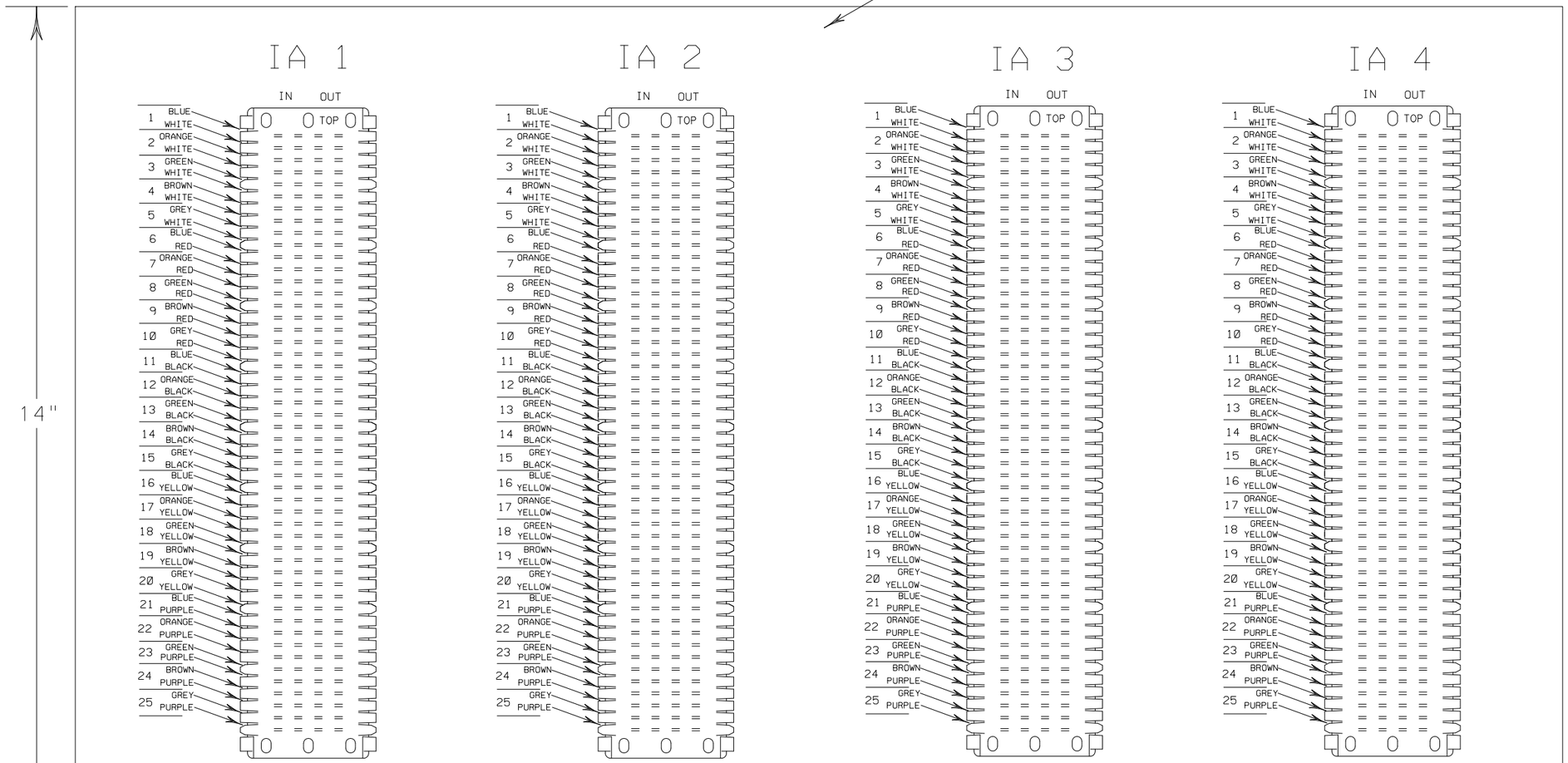

LS

|1 2|
|3 4|
|5 • 6|
|7 8|
|9 10|
|11 12|

			IDENT	LS1	LS2	LS3	LS4	LS5	LS6	LS7	LS8
			LANE	1	2	3	4	5	6	123 Y	456 Y
IN	RED	X	6	TB5-4A	TB5-8A	TB5-12A	TB5-16A	TB5-20A	TB5-24A	TB5-11A	TB5-23A
IN	YEL	↙	8	TB5-2A	TB5-6A	TB5-10A	TB5-14A	TB5-18A	TB5-22A	TB5-7A	TB5-19A
IN	GRN	↓	10	TB5-1A	TB5-5A	TB5-9A	TB5-13A	TB5-17A	TB5-21A	TB5-3A	TB5-15A
OUT	RED	X	3	TB9-4	TB9-8	TB9-12	TB10-4	T10-8	TB10-12	TB9-11	TB10-11
OUT	YEL	↙	5	TB9-2	TB9-6	TB9-10	TB10-2	T10-6	TB10-10	TB9-7	TB10-7
OUT	GRN	↓	7	TB9-1	TB9-5	TB9-9	TB10-1	T10-5	TB10-9	TB9-3	TB10-3
PWR	+24VDC		9	•	•	•	•	•	•	•	•TB8-1A
PWR	CHAS GND		2	•	•	•	•	•	•	•	•TB8-22
PWR	I20 VAC		1	•	•	•	•TB8-16	•	•	•	•TB8-16A

LOAD SWITCH CONNECTIONS

NOTE
1. ALL REQUIRED TEXT SHALL BE SILK SCREENED.

COMMUNICATION CABINET
(PUNCH DOWN PANEL DETAIL)

STATE OF TEXAS
RAJESH N. GURNANI
86265
LICENSED PROFESSIONAL ENGINEER

The seal appearing on this document was authorized by Rajesh N. Gurnani, P.E. 86265, on

_____, P.E.
Signature of Registrant & Date

Texas Department of Transportation
© 2008

COMMUNICATION CABINET DETAILS

SCALE: N/A SHEET 3 OF 5

DESIGN	FED.RD. DIV.NO.	FEDERAL AID PROJECT NO.		HIGHWAY NO.
GRAPHICS	6	(See Title Sheet)		IH 35E
	STATE	DISTRICT	COUNTY	SHEET NO.
CHECK RNG	TEXAS	DALLAS	DALLAS	106
CHECK	CONTROL	SECTION	JOB	
	0442	02	143	

TEMPLATED REVISED: 10-23-02

DATE:$DATE$

USER ID

0.125" (3 mm) ALUMINUM

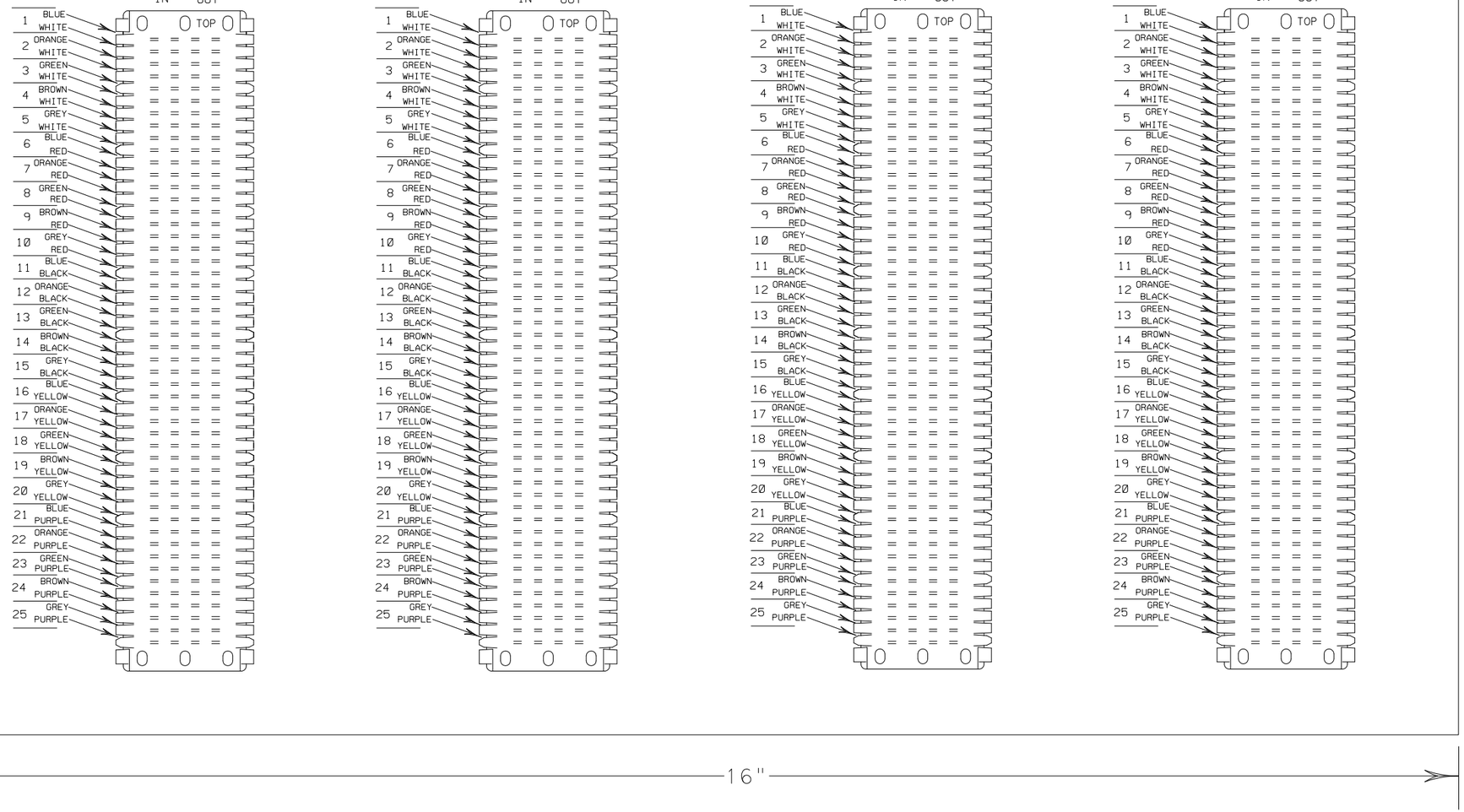

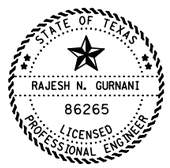

The seal appearing on this document was authorized by Rajesh N. Gurnani, P.E. 86265, on

_____, P.E.
Signature of Registrant & Date

NOTE
1. ALL REQUIRED TEXT SHALL BE SILK SCREENED.

COMMUNICATION CABINET
(PUNCH DOWN PANEL DETAIL)

TEMPLATED REVISED: 10-23-02

Texas Department of Transportation
© 2008

COMMUNICATION CABINET DETAILS

SCALE: N/A SHEET 4 OF 5

DESIGN	FED.RD. DIV.NO.	FEDERAL AID PROJECT NO.		HIGHWAY NO.
GRAPHICS	6	(See Title Sheet)		IH 35E
	STATE	DISTRICT	COUNTY	SHEET NO.
CHECK RNG	TEXAS	DALLAS	DALLAS	107
CHECK	CONTROL	SECTION	JOB	
	0442	02	143	

DATE:$DATE$

USER ID

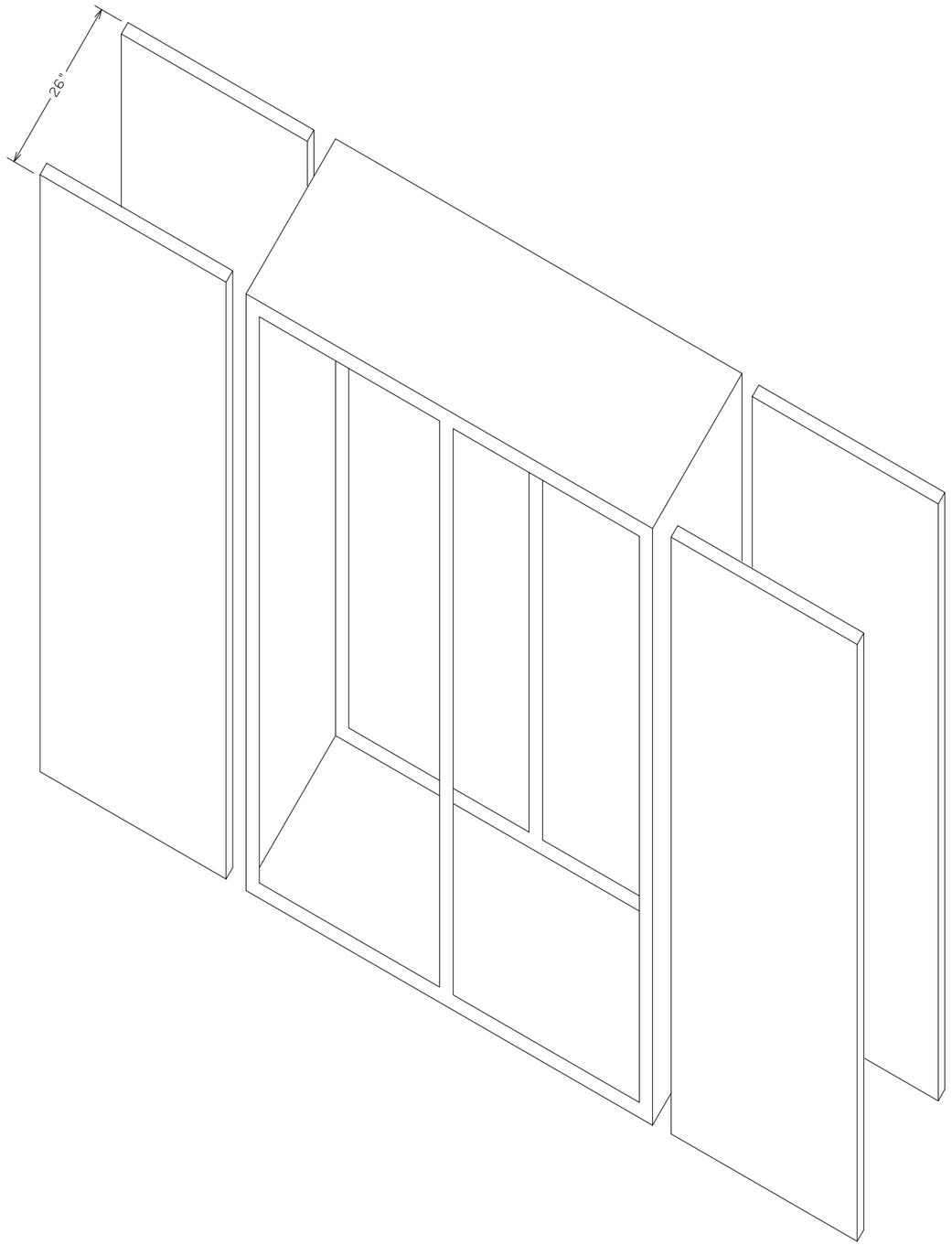

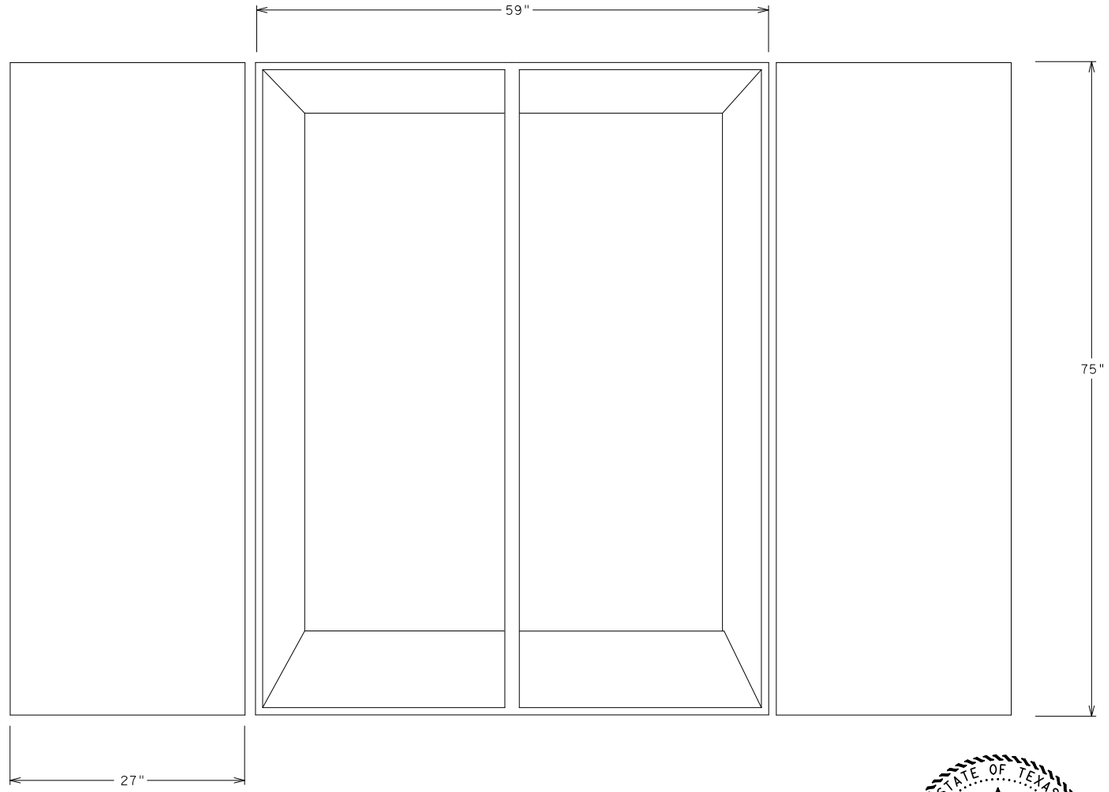

STATE OF TEXAS
RAJESH N. GURNANI
86265
LICENSED PROFESSIONAL ENGINEER

The seal appearing on this document was authorized by Rajesh N. Gurnani, P.E. 86265, on

_____, P.E.
Signature of Registrant & Date

COMMUNICATION CABINET
SHOWING FRONT & BACK DOUBLE DOORS

TEMPLATED REVISED: 10-23-02

Texas Department of Transportation
© 2008

COMMUNICATION CABINET DETAILS

SCALE: N/A SHEET 5 OF 5

DESIGN	FED.RD. DIV.NO.	FEDERAL AID PROJECT NO.		HIGHWAY NO.
GRAPHICS	6	(See Title Sheet)		IH 35E
	STATE	DISTRICT	COUNTY	SHEET NO.
CHECK RNG	TEXAS	DALLAS	DALLAS	108
CHECK	CONTROL	SECTION	JOB	
	0442	02	143	

DATE:$DATE$

USER ID

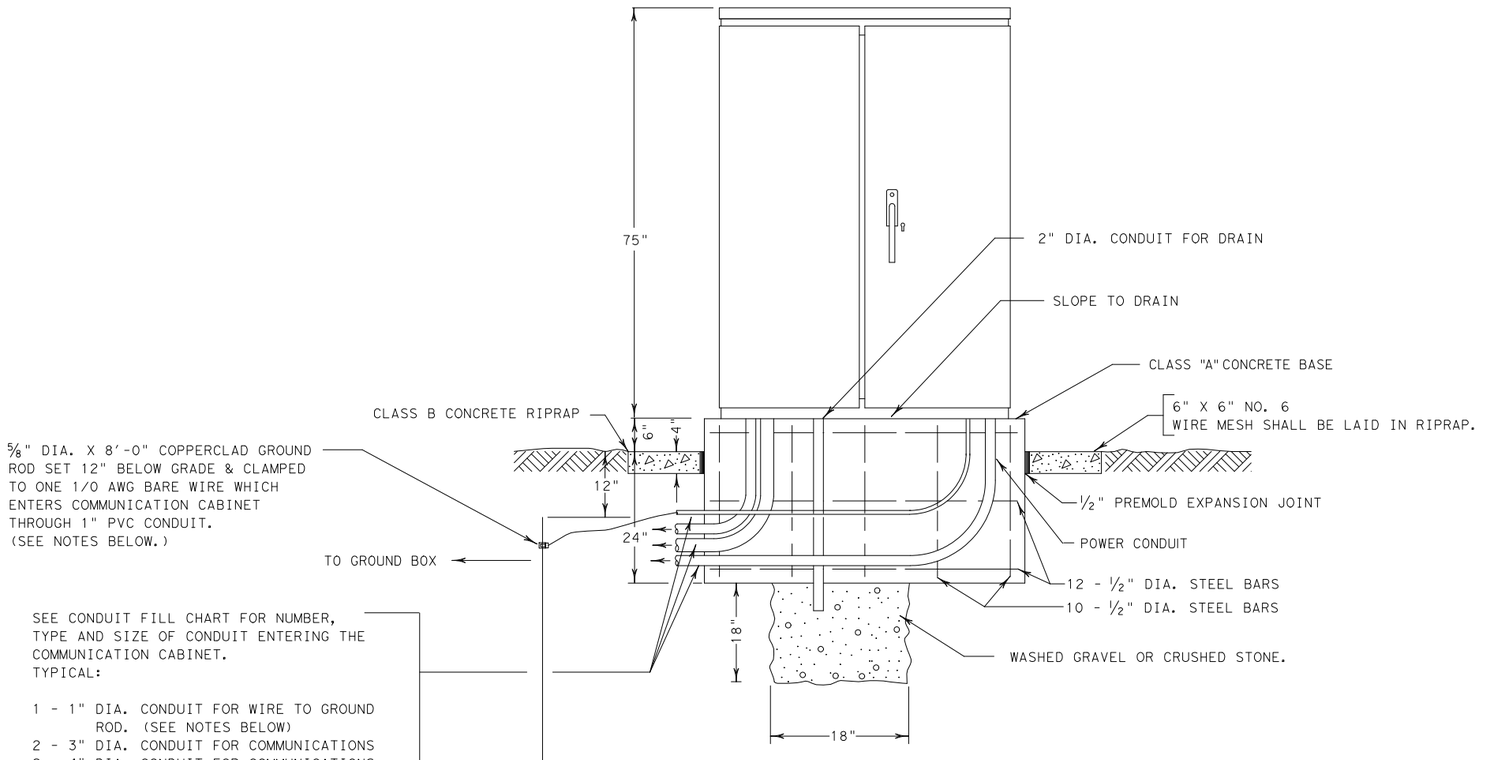

ELEVATION OF COMMUNICATION CABINET FOUNDATION

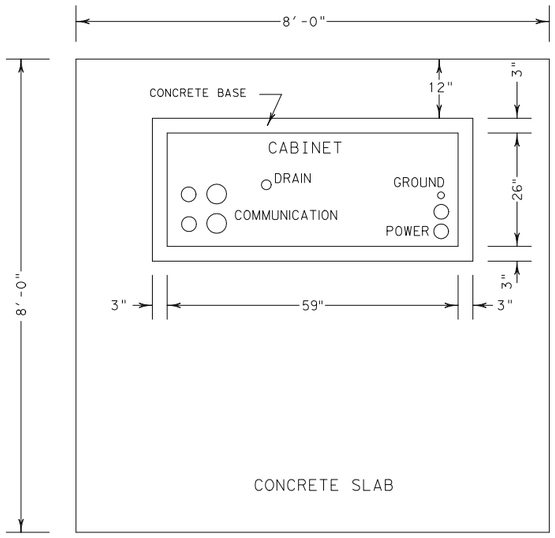

SPACING OF COMMUNICATION CABINET ON CONCRETE SLAB

NOTES:

CABINET AND BASE DIMENSIONS AND DETAILS ARE SHOWN AS EXAMPLES ONLY. CABINETS OF ANY MANUFACTURER WHICH COMPLY WITH THE SPECIFICATIONS SHALL BE DEEMED ACCEPTABLE. CONCRETE BASE DIMENSIONS AND CABINET BOLT SPACING SHALL ACCOMMODATE THE CABINET USED. THE ANCHOR BOLTS SHALL BE PLACED ON THE INSIDE OF THE CABINET.

THE COMMUNICATION CABINET SHALL NOT HAVE A FLOOR.

THE CONTRACTOR SHALL USE CLEAR SILICONE SEALANT AROUND THE INSIDE AND OUTSIDE OF THE COMMUNICATION CABINET BASE.

THE FURNISHING AND INSTALLING OF 1" PVC CONDUIT, GROUND ROD, 1/O AWG GROUND WIRE, GROUND ROD CLAMP, AND ALL OTHERS MATERIALS, LABOR, TOOLS, EQUIPMENT, AND INCIDENTALS NECESSARY TO COMPLETE THE GROUNDING OF THE COMMUNICATION CABINET AS PER NEC SHALL BE SUBSIDIARY TO THIS ITEM.

THE CONTRACTOR SHALL BE RESPONSIBLE FOR INSTALLING CABINET OF APPROPRIATE DESIGN, AT NO ADDITIONAL EXPENSE TO THE DEPARTMENT, SUCH THAT THE CABINET SHALL BE LEVEL WHEN MOUNTED ON THE FOUNDATION. THE FOUNDATION DESIGN SHALL BE SUBMITTED TO THE ENGINEER FOR APPROVAL PRIOR TO PLACEMENT.

CIRCUIT BREAKERS 2, 5, AND 6 SHALL BE SERVICED BY LINE 1 (120 VAC, 2 WIRE SINGLE PHASE) FROM THE POWER PANEL. CIRCUIT BREAKERS 1, 3, AND 4 SHALL BE SERVICED BY LINE 2 FROM THE POWER PANEL.

COMMUNICATION CABINET

STATE OF TEXAS
RAJESH N. GURNANI
86265
LICENSED PROFESSIONAL ENGINEER

The seal appearing on this document was authorized by Rajesh N. Gurnani, P.E. 86265, on

_____ ,P.E.
Signature of Registrant & Date

Texas Department of Transportation
© 2008

COMMUNICATION CABINET DETAILS

SCALE: N/A SHEET 1 OF 5

DESIGN	FED.RD. DIV.NO.	FEDERAL AID PROJECT NO.		HIGHWAY NO.
	6	(See Title Sheet)		IH 35E
GRAPHICS	STATE	DISTRICT	COUNTY	SHEET NO.
CHECK RNG	TEXAS	DALLAS	DALLAS	104
CHECK	CONTROL	SECTION	JOB	
	0442	02	143	

TEMPLATED REVISED: 10-23-02
DATE:$DATE$

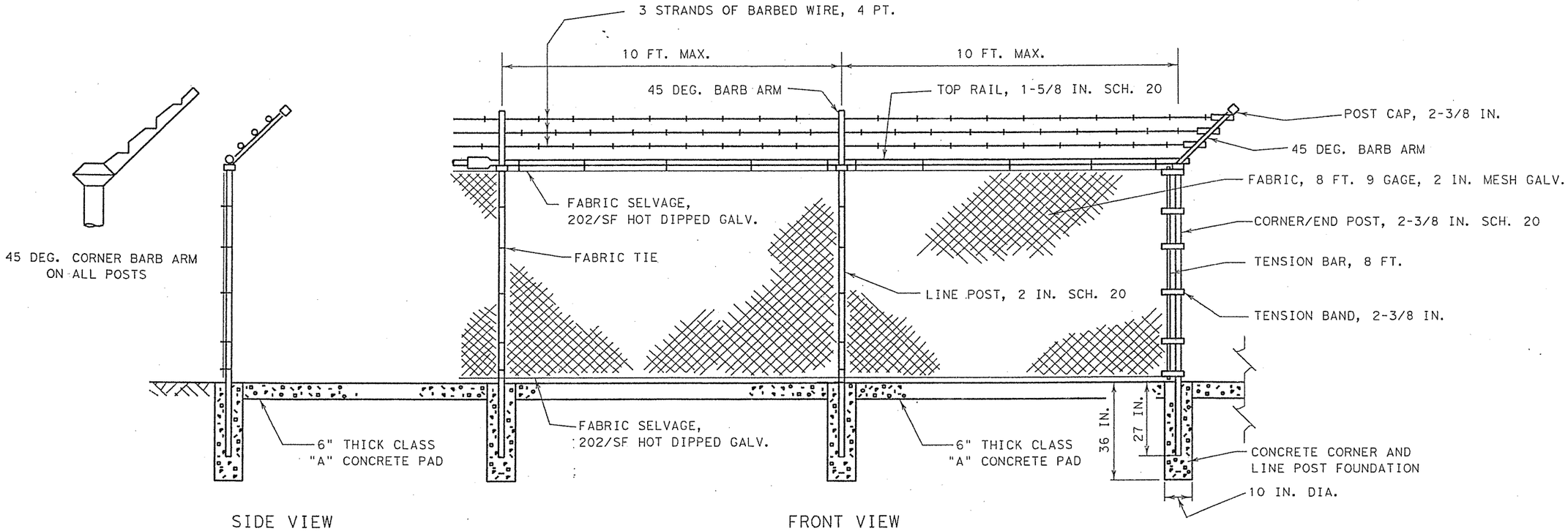

NOTES

FENCE SHALL BE TOPPED WITH 3 STRAND BARBED WIRE.

ALL POSTS SHALL BE GALVANIZED.

NOT TO SCALE

STATE OF TEXAS
RAJESH N. GURNANI
86265
REGISTERED PROFESSIONAL ENGINEER

The seal appearing on this document was authorized by Rajesh N. Gurnani, P.E. 86265, on

R Gurnani, P.E. 05/01/07

Signature of Registrant & Date

Texas Department of Transportation
© 2007

SATELLITE COMMUNICATIONS HUB (10 FT. X 15 FT.) 8 FT. CHAIN LINK FENCE

DESIGN	FED. RD. DIV. NO.	FEDERAL AID PROJECT NO.		HIGHWAY NO.
M F	6	CM 2007 (520)		LOOP 12
GRAPHICS M F	STATE	DISTRICT	COUNTY	SHEET NO.
CHECK	TEXAS	DALLAS	DALLAS	138
CHECK	CONTROL	SECTION	JOB	
	0581	02	114	

U:\ENGDATA\LOOP 12\ITS STANDARDS\LOOP 12 MHUB.DGN

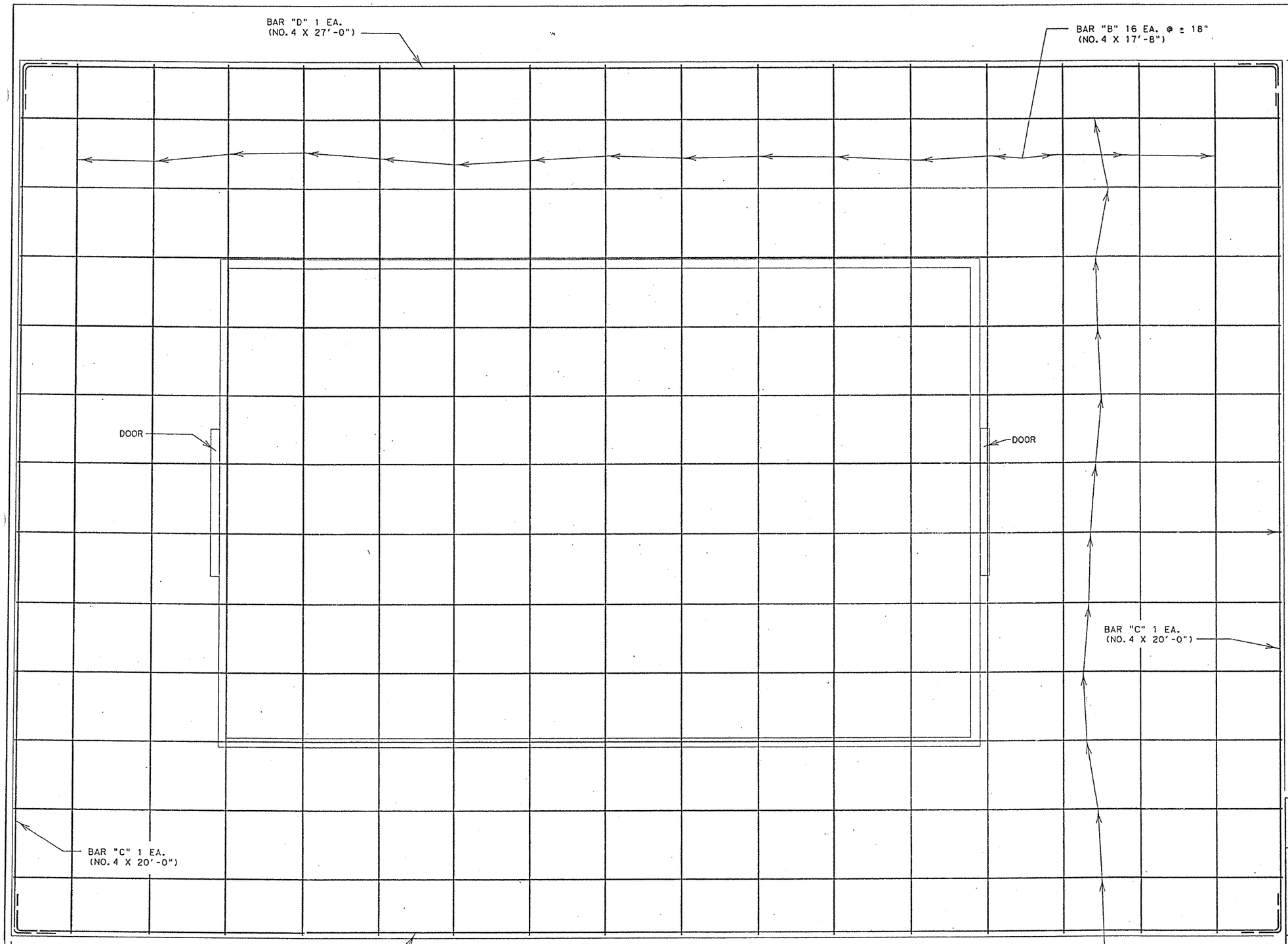

FOUNDATION PLAN VIEW

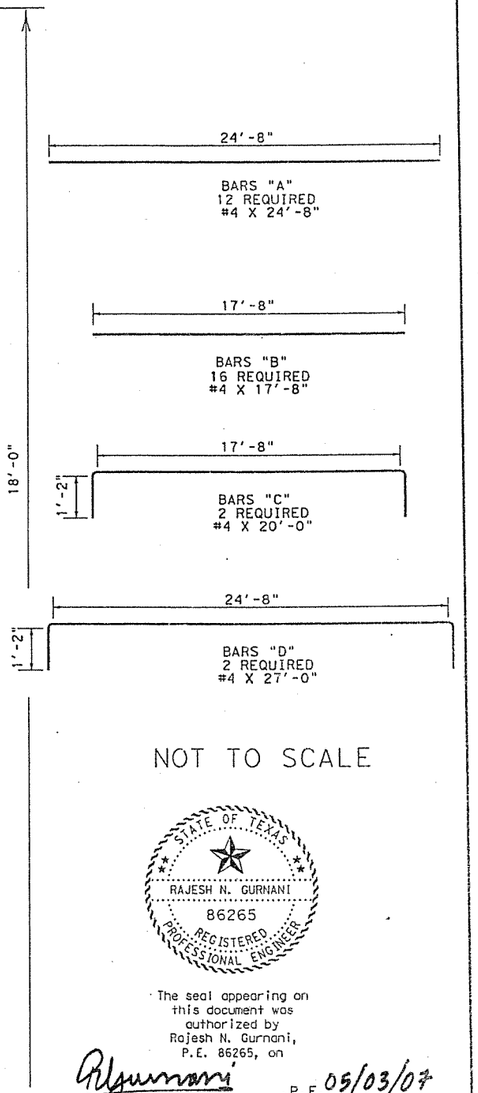

NOT TO SCALE

STATE OF TEXAS
RAJESH N. GURNANI
86265
REGISTERED PROFESSIONAL ENGINEER

The seal appearing on this document was authorized by Rajesh N. Gurnani, P.E. 86265, on

Signature of Registrant & Date 05/03/07

Texas Department of Transportation
© 2007

SATELLITE COMMUNICATIONS HUB (10 FT. X 15 FT.) AND FOUNDATION DETAILS

SHEET 2 OF 2

DESIGN	FED.RD. DIV.NO.	FEDERAL AID PROJECT NO.		HIGHWAY NO.
M F	6	CM 2007 (620)		LOOP 12
GRAPHICS M F	STATE	DISTRICT	COUNTY	SHEET NO.
CHECK	TEXAS	DALLAS	DALLAS	137
CHECK	CONTROL	SECTION	JOB	
	0581	02	114	

NOTES: THE FOUNDATION WILL BE INSTALLED ON A DIRT SURFACE.

ANCHOR BUILDING TO CONCRETE PAD WITH ¾" BOLTS, SET IN THE CONCRETE PAD.

THE CONTRACTOR SHALL FURNISH AND INSTALL TWO 15,000 BTU AIR CONDITIONERS THAT WILL HELP PREVENT HEAT RELATED FAILURE TO THE EQUIPMENT. THE CONTRACTOR SHALL SUBMIT SHOP DRAWINGS FOR THE ATTACHMENT OF THE AIR CONDITIONER TO THE BUILDING FOR APPROVAL BY THE ENGINEER. THIS AIR CONDITIONER WILL NOT BE PAID FOR DIRECTLY, BUT SHALL BE CONSIDERED SUBSIDIARY TO ITEM "FIBER COMMUNICATIONS HUB (10' X 15')".

THE SATELLITE COMMUNICATIONS HUB (10 FT. X 15 FT.) WILL BE SURROUNDED BY AN 8 FT. CHAIN LINK FENCE, SEE "SATELLITE COMMUNICATIONS HUB (10 FT. X 15 FT.) 8 FT. CHAIN LINK FENCE" DETAILS.

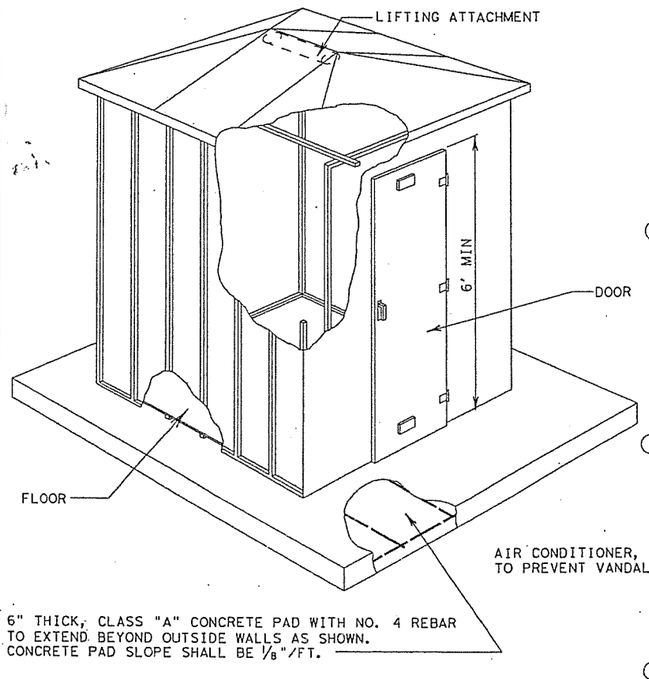

PERSPECTIVE VIEW

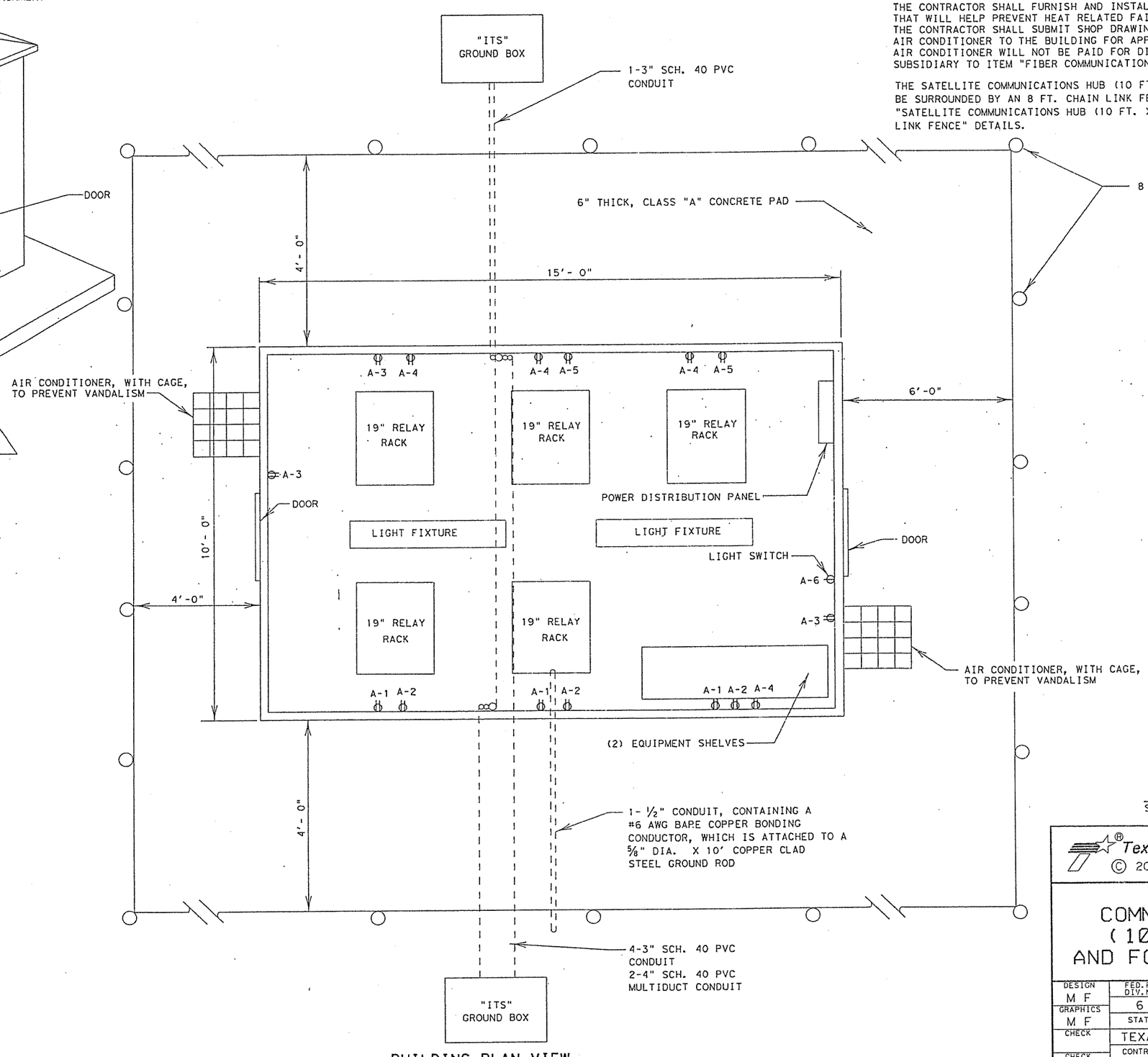

BUILDING PLAN VIEW

TYPICAL EQUIPMENT IN SATELLITE COMMUNICATIONS HUB (10 FT. X 15 FT.)

10/100 ETHERNET SWITCH
FO COLOR VIDEO AND DATA RECEIVERS
FIBER OPTIC INTERCONNECT HOUSING
MPEG-II VIDEO ENCODERS
MPEG-II VIDEO DECODER
CCTV CENTRAL EQUIPMENT
FIBER OPTIC MODEMS
TERMINAL SERVERS
WORKSTATION

BRANCH BREAKERS:

A-1 30 AMP ONE POLE
A-2 30 AMP ONE POLE
A-3 20 AMP ONE POLE
A-4 30 AMP ONE POLE
A-5 20 AMP ONE POLE
A-6 15 AMP ONE POLE

NOT TO SCALE

STATE OF TEXAS
RAJESH N. GURNANI
86265
REGISTERED PROFESSIONAL ENGINEER

The seal appearing on this document was authorized by Rajesh N. Gurnani, P.E. 86265, on

RGurnani, P.E. 05/01/07
Signature of Registrant & Date

Texas Department of Transportation
© 2007

SATELLITE COMMUNICATIONS HUB (10 FT. X 15 FT.) AND FOUNDATION DETAILS

SHEET 1 OF 2

DESIGN	FED. RD. DIV. NO.	FEDERAL AID PROJECT NO.		HIGHWAY NO.
M F	6	CM 2007 (520)		LOOP 12
GRAPHICS M F	STATE	DISTRICT	COUNTY	SHEET NO.
CHECK	TEXAS	DALLAS	DALLAS	136
CHECK	CONTROL	SECTION	JOB	
	0581	02	114	

Texas Department of Transportation
Book 2 - Technical Provisions

IH 35E Managed Lanes Project

Attachment 17-2

Modifications to Special Specifications SS2055 and SS2056

ATTACHMENT 17-2

2055

Automated Barricade Gate

For this project, Item 2055, "Automated Barricade Gate" is hereby amended with respect to the clauses cited below. No other clauses or requirements of this Item are waived or changed hereby.

Article 2055.2. Materials, A. General Requirements. The following is to be included at the end of this section:

Automated Barricade Gate base is anchored on top of and must not exceed the width of concrete safety barrier. Gates shall not be operated wirelessly unless approved by TxDOT. Developer shall embed the conduits for the Automated Barricade Gates' communication and power within the concrete safety barrier. Gates shall follow the direction of traffic when opening.

Automated Barricade Gates shall be located on managed lane entrance points, on managed lane auxiliary lanes, or for merging purposes as provided below.

1. **Automated Barricade Gate Placement on Auxiliary Lane:**

   When an auxiliary lane is located between a managed lane entrance and exit ramps, gates shall be used to discourage opposing traffic from using the lane to pass. Begin gate placement on the painted nose of the managed lane entrance physical gore. Continue spacing the gates on a tangent throughout the auxiliary lane until the painted nose of the exit physical gore is reached. Do not place gates on the exit ramp.

   The gate housing shall be located on top of the adjacent concrete barrier. Gate spacing shall be in accordance with suggested spacings provided in the latest Texas MUTCD's Table 6C-4 Merging Taper Lengths and Spacing of Channelizing Devices.

2. **Automated Barricade Gate Placement for Merging Purposes:**

   When a merged condition is required to merge traffic into one lane before reaching a closed managed lane entrance ramp, place gates on the taper that will merge lanes prior to reaching the area of concern. After the merging taper is completed, place a minimum of two additional gates on a tangent so that a buffer is created between the closed managed lane entrance ramp and the merging taper. The last gate shall be placed at the end of the physical gore on the managed lanes side of the managed lane entrance ramp.

   The gate housing shall be located on top of the adjacent concrete barrier. Gate shall be in accordance with suggested spacings provided in the latest Texas MUTCD's Table 6C-4 Merging Taper Lengths and Spacing of Channelizing Devices.

3. Automated Barricade Gate Placement on Managed Lane Entrance Ramps:

Begin placing the gates on a taper where the managed lane entrance alignment deters from the main lane alignment. Place a gate at the beginning of the managed lane entrance ramp physical gore. A minimum of three gates shall be placed throughout the physical gore, with the last gate located at the end of the gore. The end of the gore shall be considered to be where the concrete safety barrier begins between the managed lane entrance location and the general purpose lane. The last gate arm length shall not exceed the width of the managed lane entrance ramp and its shoulders.

A second set of gates shall be placed in a similar manner on the opposite end of the managed lane entrance point, where the managed lane entrance ramp alignment deters from the managed lane alignment. The gates shall channel traffic away from the managed lane entrance point, which shall be closed via a Vehicle Arresting Barrier.

The gate housing shall be located on the adjacent concrete barrier. Gate spacing shall be in accordance with suggested spacings provided in the latest Texas MUTCD's Table 6C-4 Merging Taper Lengths and Spacing of Channelizing Devices.

If the suggested spacing cannot be met or the design of the corridor has changed, the Developer must first obtain approval from the TxDOT prior to placing gates.

Article 2055.2. Materials, B. Functional Requirements. The following is to be added before the fifth paragraph:

The Automated Barricade Gates shall be configured to primarily operate using existing or planned master controllers located at DalTrans Transportation Management Center and may be converted for field use via the Gate Control Panel. Field operator must first obtain approval from TxDOT prior to switching to manual control. It shall operate in conjunction with Item 2056 "Vehicle Arresting Barrier" (VAB) and any other ITS devices used to control access, such as Single Line Dynamic Message Sign Systems, via an integration software to be provided by the Developer. The Automated Barricade Gates shall not operate independently of the Vehicle Arresting Barrier or Dynamic Message Sign unless specifically authorized by TxDOT.

The lanes must be closed down completely, and verification via field presence or CCTV must be completed to ensure that the lanes are rid of any traffic, including stalled vehicles, prior to opening the lanes in the opposite direction. Prior to acceptance of this project, the Developer shall demonstrate complete operability of all Automatic Barricade Gates installed on this project at the DalTrans Transportation Management Center.

Article 2055.2. Materials, C. Electrical Requirements, 2. Actuator Control Circuits and Accessories. The last electrical component is to be voided and replaced by the following:

- RF control system for communication with the control panel and other Automated Barricade Gates. The placement between each gate must not be farther than the distance required by the manufacturer or up to ¾ mile, whichever is less.

Article 2055.2. Materials, C. Electrical Requirements, 3. Control Panels. The section is voided and replaced by the following:

The Developer must provide a Gate Control Panel which is used to control a specified number of gates. The Gate Control Panel interconnects via TxDOT's ITS network.

The Developer must provide a Gate HOV Lane Control Panel that controls individual gates. Mount the Gate HOV Lane Control Panel on the Gate Control Panel. The Gate Control Panel shall be placed on the concrete barrier widening at the VAB locations and shall be accessed from the managed lanes. Final placement of Gate Control Panels shall be determined in the field and approved by TxDOT prior to construction.

Article 2055.2. Materials, C. Electrical Requirements, 3. Control Panels, a. Gate Control Panel. The first paragraph is voided and replaced by the following:

Provide a Gate Control Panel for each system. A system consists of a series of gates used to manage traffic at an managed lane entrance point. The gate control panel is not to be microprocessor based.

Article 2055.2. Materials, C. Electrical Requirements, 3. Control Panels, a. Gate Control Panel. The three modes are voided and replaced by the following:

(1) Remote Control Mode – The gate shall be controlled primarily under remote control mode via the integration software. Use of other modes must first be approved by TxDOT prior to switching from this mode. Remote control mode is locked while in Local or HOV Lane control mode.

(2) HOV Lane Mode – The gate shall be controlled locally by the Gate HOV Lane Control Panel, described in the next section. Use of HOV Lane Mode must be authorized by TxDOT prior to operating.

(3) Local Mode – A series of gates shall be controlled locally by the use of switches on the Gate Control Panel. Use of Local Mode must be authorized by TxDOT prior to operating.

Article 2055.2. Materials, D. Mechanical Requirements, 1. Gate Construction. The following is to be added to the end of the third paragraph:

The actuator can be operated manually or with a power drill.

Article 2055.2. Materials, D. Mechanical Requirements, 3. Swing Gates. The second paragraph is voided and replaced by the following:

Gate arms are white and covered on one side with 16-inch alternating red and white engineering grade reflectorized sheeting, sloped downward at a 45 degree angle toward the gate extremity, in accordance with Section 2B.68 "Gates" of the TMUTCD or as approved by the Engineer. The reflectorized sheeting shall face oncoming traffic.

Article 2055.2. Materials, D. Mechanical Requirements, 3. Swing Gates. The fourth paragraph is voided and replaced by the following:

4. Chevron Panel. Install a chevron panel on the gate extremity. The panel sheeting shall be in accordance with DMS-8300. The appearance of the color, size, and symbol of the sign can be found in the Standard Highway Sign Designs for Texas. A red flashing LED arrow shall be fitted on the chevron panel for additional road user's visibility and safety. The arrow must be turned on or off as specified in 2B.68 "Gates" of the TMUTCD.

Length of gate arm and chevron panel must allow for a minimum of 2' clearance between the edge of travel way and the edge of the chevron panel. Gate, chevron, and LED arrow shall be easily replaceable in case of permanent damage. Gate housing and chevron shall be able to withstand multiple nuisance impacts and only suffer visual damage.

Article 2055.2. Materials, D. Mechanical Requirements, 6. Power. The following is to be added to the end of the first paragraph:

The equipment shall be capable of using a generator in the event of power failure.

Article 2055.2. Materials, D. Mechanical Requirements, 8. Protection. The following is to be added to the end of the first paragraph:

Equipment shall also be equipped with surge protectors.

ATTACHMENT 17-2

2056

Vehicle Arresting Barrier

For this project, Item 2056, "Vehicle Arresting Barrier" is hereby amended with respect to the clauses cited below. No other clauses or requirements of this Item are waived or changed hereby.

Article 2056.1. Description. This section shall be replaced in its entirety with the following:

This Item governs for the furnishing and installation of Vehicle Arresting Barriers at Managed Lane entrance ramps between the inside and outside concrete traffic barriers at the Managed Lane entrance ramps. A minimum of 200 feet of concrete traffic barrier, on each side of the traffic lane, shall be placed on each side, in advance and behind the Vehicle Arresting Barrier.

Article 2056.2. Materials, A. General Requirements. An additional paragraph is to be added to the bottom of this section.

The Vehicle Arresting Barrier (VAB) shall be configured to primarily operate using the existing or planned master controllers located at DalTrans Transportation Management Center and may be converted for field use via the VAB control panel. Field operator must first obtain approval from TxDOT prior to switching to manual control. The VAB shall be locked for use by DalTrans while the VAB Control Panel is operated manually. The VAB shall not be operated wirelessly unless approved by TxDOT. Developer shall embed the conduits for the VAB's communication and power within the concrete safety barrier.

The VAB shall operate in conjunction with Item 2055 "Automated Barricade Gates" and any other ITS devices used to control access, such as Single Line Dynamic Message Sign Systems (SDMS) via an integration software to be provided by the Developer. The VAB shall not operate independently of the Automated Barricade Gates or SDMS unless specifically authorized by TxDOT.
The lanes must be closed down completely, and verification via field presence or CCTV must be completed to ensure that the lanes are rid of any traffic, including stalled vehicles, prior to opening the lanes in the opposite direction. At any time the VAB net is raised or lowered, it shall also be verified via field presence or CCTV that all three systems, automated barricade gates, VAB, and SDMS, are interconnecting properly.

Developer shall embed the conduits for the VABs' communication and power within the concrete safety barrier.

Prior to completion of this project, the Contractor shall demonstrate complete operability of all VAB systems installed on this project at the DalTrans Traffic Management Center.

Article 2056.2. Materials, B. Functional Requirements. The second paragraph is to be voided and replaced by the following:

The roadway barrier must be widened to a minimum of four feet, from toe to toe, or as required by the manufacturer to protect the towers. A barrier gap between the towers shall be provided to allow the restraining net to raise and lower properly. Developer must provide a method of protecting the gap while the restraining net is raised.

The structure used to support the restraining and lifting-lowering mechanisms must be capable of withstanding all operating loads placed upon them, to include load transferred by the impact and deceleration of a bus, by the lifting-lowering mechanism, and by loads generated by environmental conditions.

The VAB structure location shown on the plans may be adjusted to fit field conditions if approved by TxDOT. Each structure is secured at its base to a reinforced concrete foundation. Prior to fabrication, the Developer shall determine the limiting elevation at the centerline of the VAB's structural frame. This elevation shall be used to calculate the exact height for fabrication. The structure must allow for a minimum of 17'-6" of vertical clearance between the roadway and the bottom of the overhead section of the VAB when the restraining mechanism is in the raised position.

Article 2056.2. Materials, B. Functional Requirements. The following is to be added to the end of this section.

The VAB shall be capable of using a portable generator in the event of power failure. Developer shall provide one portable generator that meets the requirements of the VAB for the entire corridor.

Article 2056.2. Materials, C. Electrical Requirements. The following is to be added to this section.

The VAB and control panel shall be equipped with an electrical surge protector.

Article 2056.2. Materials, C. Electrical Requirements, 2. Vehicle Arresting Barrier Local Control Panel. The following is to be added to the bottom of this section.

The VAB Control Panel shall be placed on the concrete barrier widening at the VAB location and shall be accessible from the managed lanes. Final placement of the VAB Control Panel shall be determined in the field and approved by TxDOT prior to construction.

Article 2056.3. Construction, A. General. The following is to be added to the bottom of this section.

a. Submit VAB shop drawings meeting or exceeding the design criteria provided in the plans for review and approval. Drawings must bear the seal of a licensed professional engineer. Include details on shape, dimensions, and material type of structural frame and

foundation; restraining mechanism; raising and lowering hardware; and any additional necessary details.

b. Submit VAB electrical drawings detailing the interconnectivity between the VAB Control Panel and DalTrans as well as connectivity between the VAB and the VAB control panel. Include VAB control panel details, showing proper dimensions and typical placement within the widened barrier, and remote control details.
c. Include applicable calculations and summary of design parameters, such as design speed, wind loads, material types, and design vehicle.

Texas Department of Transportation
Book 2 - Technical Provisions

IH 35E Managed Lanes Project

Attachment 21-1

Toll Systems Responsibility Matrix

ATTACHMENT 21- 1

Texas Department of Transportation **Toll Systems Responsibility Matrix**

LEGEND		Work Description		
Primary Responsibility	A	**1**	**2**	**3**
Support Responsibility	B	Design	Procure	Install and/or Construct
Coordination Responsibility Only	C			
No Responsibility	D			

Element/Task/Component/ Sub-system	D/B CDA Developer (D/B)			System Integrator (SI)			Comments Other Responsibility/Information
	1	**2**	**3**	**1**	**2**	**3**	
FACILITIES							
Toll Plaza Layout	C	C	C	A	A	A	SI to provide system design. D/B to provide access to SI for construction.
Metered power service to roadside equipment cabinet	A	A	A	B	D	C	SI to provide power requirements and special requirement for construction of utilities near toll collection point.
Lighting	A	A	A	B	D	D	SI to provide lighting requirements of toll gantry area such that Developer installed lighting provides gradient through the toll zone and is coordinated with the image capture system.
Toll Gantry Signs	D	D	D	A	A	A	SI to provide and install any signs that will be mounted to a toll gantry.
Complete backup power systems: generators, automatic transfer switches, and fuel tanks	D	D	D	A	A	A	
Foundation and conduits for backup power systems	D	D	C	A	A	A	SI to provide foundations and conduits between foundations.
Uniform Uninterruptible Power Supplies	D	D	C	A	A	A	
Lightning Protection & Grounding	D	D	C	A	A	A	
Duct Bank	A	A	A	B	D	C	D/B to install backbone conduit Duct Bank complete with pull strings.
Fiber Optic cables in Duct Bank for Toll Systems	A	A	A	B	D	C	
Data/Communication service to roadside equipment cabinet	D	D	C	A	A	A	SI to install from duct bank to the roadside equipment cabinet.

ATTACHMENT 21- 1

Texas Department of Transportation **Toll Systems Responsibility Matrix**

LEGEND		Work Description		
Primary Responsibility	A	1	2	3
Support Responsibility	B	Design	Procure	Install and/or Construct
Coordination Responsibility Only	C			
No Responsibility	D			

Element/Task/Component/ Sub-system	D/B CDA Developer (D/B)			System Integrator (SI)			Comments Other Responsibility/Information
	1	2	3	1	2	3	
Data/Communication wire/fiber from roadside equipment cabinet to toll systems equipment	D	C	C	A	A	A	SI to install from roadside equipment cabinet to toll systems equipment.
Pavement, inclusive of special nonferrous zones and conduit stub outs for in pavement sensors	A	A	A	B	D	C	SI to provide any special requirements for pavement design.
Pavement sensors	B	C	C	A	A	A	D/B to provide access to SI to saw cut and install pavement sensors.
Gantries including special framing for equipment mounts	D	D	C	A	A	A	D/B will coordinate access to roadway for installations.
Toll Equipment mounts on Gantries	D	D	C	A	A	A	D/B will coordinate access to roadway for installations.
Roadside equipment cabinet slabs	D	D	C	A	A	A	D/B will coordinate access to roadway for installations.
Roadside equipment cabinets (including HVAC systems)	D	D	C	A	A	A	D/B will coordinate access to roadway for installations.
Lane Controller Hardware	D	D	C	A	A	A	D/B will coordinate access to roadway for installations.
Communication Equipment	D	D	C	A	A	A	D/B will coordinate access to roadway for installations.
ELECTRONIC TOLL COLLECTION SUB-SYSTEMS (ETC)							
Installation/Electrical Design and Plans	B	D	C	A	A	A	D/B to provide toll zone design plans and electrical plans to SI. D/B will coordinate access to roadway for installations.
Automatic Vehicle Classification System and Image Capturing System (ICS) Hardware	B	D	C	A	A	A	D/B to provide pavement details as needed for SI design efforts. D/B will coordinate access to roadway for installations.

ATTACHMENT 21- 1

Texas Department of Transportation **Toll Systems Responsibility Matrix**

LEGEND		Work Description		
Primary Responsibility	A	**1**	**2**	**3**
Support Responsibility	B	Design	Procure	Install and/or Construct
Coordination Responsibility Only	C			
No Responsibility	D			

Element/Task/Component/ Sub-system	D/B CDA Developer (D/B)			System Integrator (SI)			Comments Other Responsibility/Information
	1	**2**	**3**	**1**	**2**	**3**	
Roadside Equipment Cabinets	D	D	C	A	A	A	D/B will coordinate access to roadway for installations.
Computer rack system, routers, hubs, switches, firewalls, VPN, modems, patch/distribution panels,	D	D	C	A	A	A	D/B will coordinate access to roadway for installations.
Toll Plaza Host Computer	D	D	C	A	A	A	D/B will coordinate access to roadway for installations.
Back-up Host Computer	D	D	D	A	A	A	
Support equipment at TxDOT or NTTA Customer Service Center	D	D	D	A	A	A	
Workstations/Printers	D	D	D	A	A	A	
Commissioning and Operational Testing	D	D	C	A	A	A	
Lane Controller Software	D	D	D	A	A	A	
Plaza Computer Software	D	D	D	A	A	A	
Host Computer Software	D	D	D	A	A	A	
Toll Collection System Application Software	D	D	D	A	A	A	
Security Access System Software	D	D	D	A	A	A	
Maintenance Online Management System Software	D	D	D	A	A	A	
Factory Acceptance Test	D	D	C	A	A	A	D/B will coordinate access to roadway for testing.
Project Acceptance Test	D	D	C	A	A	A	D/B will coordinate access to roadway for testing.
Training	D	D	D	A	A	A	
Documentation	D	D	D	A	A	A	
FCC Licenses/Regulations as applies to toll systems	D	D	C	A	A	A	D/B will coordinate access to gather necessary information.

ATTACHMENT 21- 1

Texas Department of Transportation **Toll Systems Responsibility Matrix**

LEGEND		Work Description		
Primary Responsibility	A	1	2	3
Support Responsibility	B	Design	Procure	Install and/or Construct
Coordination Responsibility Only	C			
No Responsibility	D			

Element/Task/Component/ Sub-system	D/B CDA Developer (D/B)			System Integrator (SI)			Comments Other Responsibility/Information
	1	2	3	1	2	3	
TOLL-RELATED INTELLIGENT TRANSPORTATION SYSTEMS							
Toll Rate Signs – Foundations and Static Sign	A	A	A	B	C	C	
Toll Rate Signs – Digital Elements	B	D	C	A	A	A	
Vehicle Detection Sensors (Shared)	A	A	A	B	C	A	D/B to procure and install for general ITS. D/B to install communication cable to toll network communication cabinet. SI to procure and install toll network cabinet, and connect to toll network.
Travel Time Sensors	A	D	C	B	A	A	SI to provide dimensions of sensor to D/B for incorporation into structural height calculations. D/B to provide access to roadway for installation.
FCC Licenses/Regulations as applies to Travel Time Sensors	A	D	C	B	A	A	D/B to provide location information of travel time sensor locations installations. D/B will coordinate access to gather necessary information.

Texas Department of Transportation
Book 2 - Technical Provisions

IH 35E Managed Lanes Project

Attachment 21-2

Plaza Pavement Details

NOTES:

1. 8" IS MEASURED FROM TOP OF PAVEMENT TO TOP OF STEEL.
2. REINFORCING STEEL SIZE TO MATCH EXISTING OR PROPOSED ROADWAY PAVEMENT REINFORCEMENT.
3. NO MORE THAN 1/3 OF BARS MAY BE SPLICED WITHIN A 2' LENGTH.
4. NO TRANSVERSE JOINTS ARE ALLOWED WITHIN THE PLAZA PAVEMENT AREA. LONGITUDINAL JOINTS ARE ONLY ALLOWED ON LANE LINES.
5. COMPACTED SUBGRADE SHALL BE DENSITY CONTROLLED AND MAY BE USED AT RAMP PLAZA. LTS SHALL BE USED AT MAINLANE PLAZA.
6. REINFORCEMENT MUST BE EPOXY COATED WITHIN THESE LIMITS, INCLUDING TRANSITION PAVEMENT.
7. ALL ACCESSORIES AS TIES, BAR CHAIRS, SUPPORTS OR CLIPS WILL BE NON-FERROUS. PLASTIC, PRECAST MORTAR OR CONCRETE BLOCK SUPPORTS AS APPROVED BY THE ENGINEER MAY BE USED.
8. CONSTRUCTION OF DATA AND POWER CONDUITS FOR LOOPS SHOULD BE COORDINATED WITH SYSTEMS INTEGRATOR PRIOR TO CONSTRUCTION OF PAVEMENT.

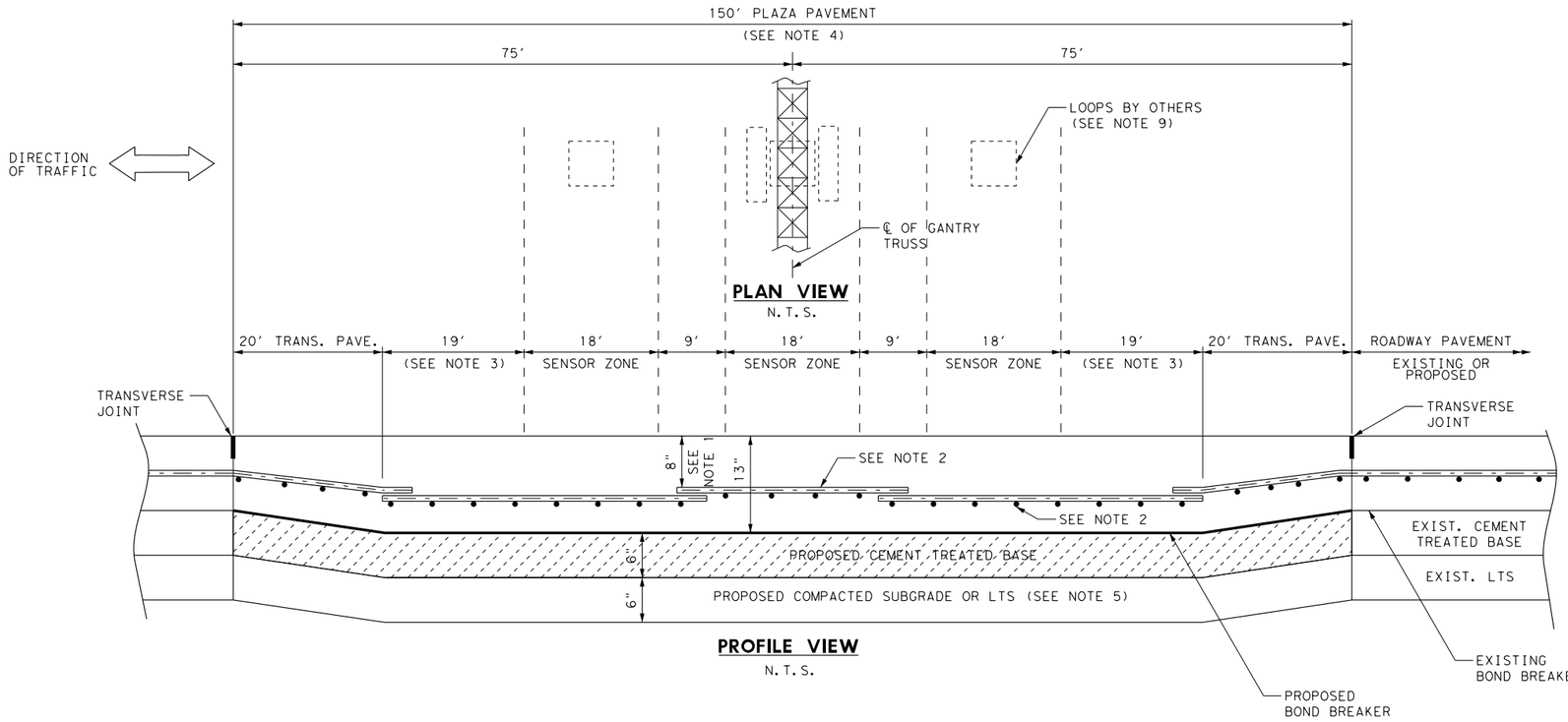

PLAN VIEW
N.T.S.

PROFILE VIEW
N.T.S.

Texas Department of Transportation
Dallas District

PLAZA PAVEMENT DETAILS

FILE:	DN:	CK:	DW:	CK:	
©TxDOT 2012	DIST	FED REG	PROJECT NO.		SHEET
REVISIONS	DAL	6			
	COUNTY		CONTROL	SECT	JOB	HIGHWAY