PSS SPR FORCE STRUCTURE PANEL

OVERVIEW

FORCE STRUCTURE PANEL OBJECTIVE

DETERMINE THE CAPABILITY OF ADJUTANT GENERAL, CHAPLAIN, FINANCE, JUDGE ADVOCATE GENERAL & PUBLIC AFFAIRS FORCE STRUCTURE TO PROVIDE QUALITY PERSONNEL SERVICE SUPPORT TO SOLDIERS & UNITS IN SUPPORT OF ALB DOCTRINE (THROUGH THE 1990'S).

PSS SPR FORCE STRUCTURE PANEL

OVERVIEW

PANEL MEMBERS

GENERAL OFFICERS & ORGANIZATIONS	*ACTION OFFICERS*
BG SALOMON, *CHAIRMAN* 21ST SUPCOM/ORD CEN & SCHOOL	MAJ VELTEN
MG WISHART USACACDA/1ST INF DIV	MAJ TICHENOR
BG (P) GREENWAY HQDA DCSOPS	LTC DURBIN/MAJ KAYE
BG SUMMERLIN 31ST ARMOR BDE	LTC MATHIS
BG ARNDT DEP ACOA (F&A)	MAJ FRANKL
COL (P) WHEELER 8TH PERSCOM	LTC STACEY

PSS SPR FORCE STRUCTURE PANEL

OVERVIEW

FORCE STRUCTURE PANEL OBJECTIVE

DETERMINE THE CAPABILITY OF ADJUTANT GENERAL, CHAPLAIN, FINANCE, JUDGE ADVOCATE GENERAL & PUBLIC AFFAIRS FORCE STRUCTURE TO PROVIDE QUALITY PERSONNEL SERVICE SUPPORT TO SOLDIERS & UNITS IN SUPPORT OF ALB DOCTRINE (THROUGH THE 1990'S).

PSS SPR FORCE STRUCTURE PANEL

OVERVIEW

FORCE STRUCTURE PANEL ISSUES

- GIVEN THE CURRENT DOCTRINE & EMERGING CONCEPTS, DETERMINE IF PSS UNITS ARE PROPERLY STRUCTURED, LOCATED & MANNED TO SUPPORT THE AIRLAND BATTLE CONCEPT
- GIVEN THE CURRENT RESOURCE CONSTRAINTS, DETERMINE IF MACOMs CAN PROPERLY TRANSITION FROM THE CURRENT STRUCTURE TO THE "L" SERIES TOEs
- DETERMINE THE ADEQUACY OF UNIT & TOE MINISTRY TEAM SUPPORT AT ECHELONS ABOVE DIVISION

PSS SPR FORCE STRUCTURE PANEL

UNIT STRUCTURE

TERMINOLOGY

- CURRENT PSS DESIGNS
  - PRE-AOE: UNITS ORGANIZED UNDER THE H & J SERIES TOE ARCHITECTURE
  - AOE "L": UNITS ORGANIZED UNDER THE INCREMENTAL TOE ARCHITECTURE
- EMERGING CONCEPT
  - AOE "L-PLUS": CONCEPTUAL UNITS TO BE ORGANIZED UNDER THE SSC EMERGING CONCEPT

PSS SPR FORCE STRUCTURE PANEL

UNIT STRUCTURE

DISCUSSION:

CURRENT PSS DESIGNS ARE OVERSTRUCTURED

- **PRE-AOE DESIGNS**
  - — BATTLEFIELD LAYDOWN
  - — STRUCTURE STRENGTH
- **AOE "L" DESIGN**
  - — BATTLEFIELD LAYDOWN
  - — STRUCTURE STRENGTH

PSS SPR FORCE STRUCTURE PANEL

UNIT STRUCTURE

PRE-AOE DESIGNS

- BOTH AREA & UNIT SUPPORT PROVIDED AT ECHELONS ABOVE DIVISION
- PSS SUPPORT ORGANIC TO THE DIVISION
- ARMY 86 CAUSED A PSC SUPPORT RATIO IMBALANCE BETWEEN DIV & EAD; E.G. 1 PER 200 (DIV PSC) VS 1 PER 90 (EAD PSC)
- POSTAL SUPPORT OVERSTRUCTURED (TAA-91 PROCESS)

PRE-AOE

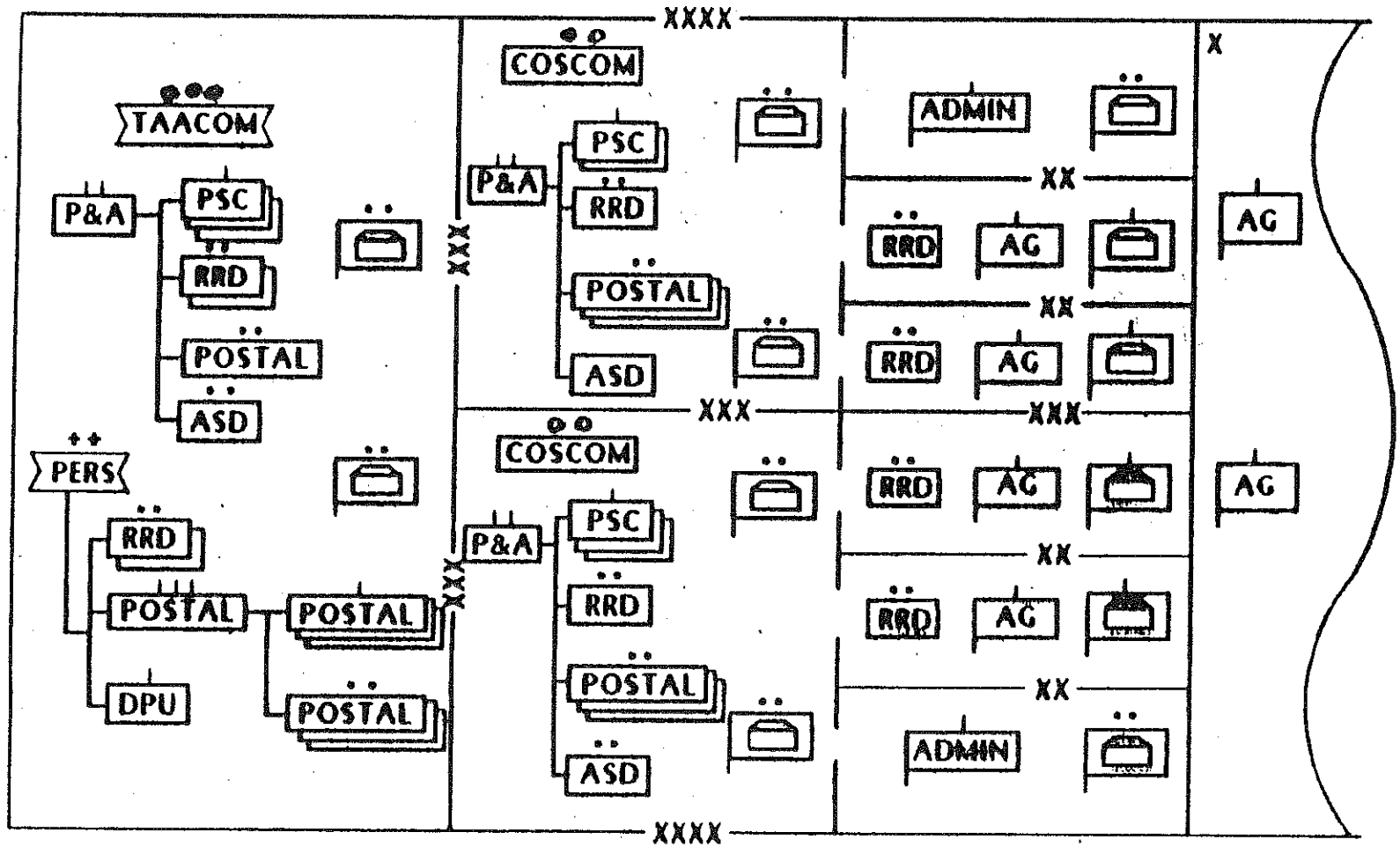
XXXX
TAACOM
P&A
PSC
RRD
POSTAL
ASD
PERS
RRD
POSTAL
DPU
POSTAL
POSTAL
XXX
COSCOM
P&A
PSC
RRD
POSTAL
ASD
XXX
COSCOM
P&A
PSC
RRD
POSTAL
ASD
XXXX
X
ADMIN
XX
RRD
AG
XX
RRD
AG
XXX
RRD
AG
XX
RRD
AG
XX
ADMIN
AG
AG

PSS SPR FORCE [illegible]RUCTURE PANEL

UNIT STRUCTURE

STRUCTURE STRENGTH (TOTAL ARMY)

	PRE-AOE UN	STR
PERSCOM	2	484
PSG	0	0
P & A BN	23	1,330
AG CO/PSC	113	15,450
POSTAL	59	1,595
TFSC/TFC	2	236
CFSG/CFG	5	498
FI CO/ AFSC/FSU	61	4,918
TOTAL		24,511

PSS SPR FORCE STRUCTURE PANEL

UNIT STRUCTURE

STRUCTURE STRENGTH (ACTIVE ARMY)

	PRE-AOE UN	PRE-AOE STR
PERSCOM	2	484
PSG	0	0
P & A BN	3	171
AG CO/PSC	45	5,839
POSTAL	29	712
TFSC/TFC	2	236
CFSG/CFG	4	380
FI CO/AFSC/FSU	35	2,497
TOTAL		10,319

PSS SPR FORCE STRUCTURE PANEL

UNIT STRUCTURE

AOE "L" DESIGN

- AG & FI UNITS NO LONGER ORGANIC TO DIVISIONS
- BOTH AREA (FI) & UNIT (AG) SUPPORT PROVIDED
- POSTAL SUPPORT STRUCTURE REDESIGNED
- NUMBER OF SRCs REDUCED

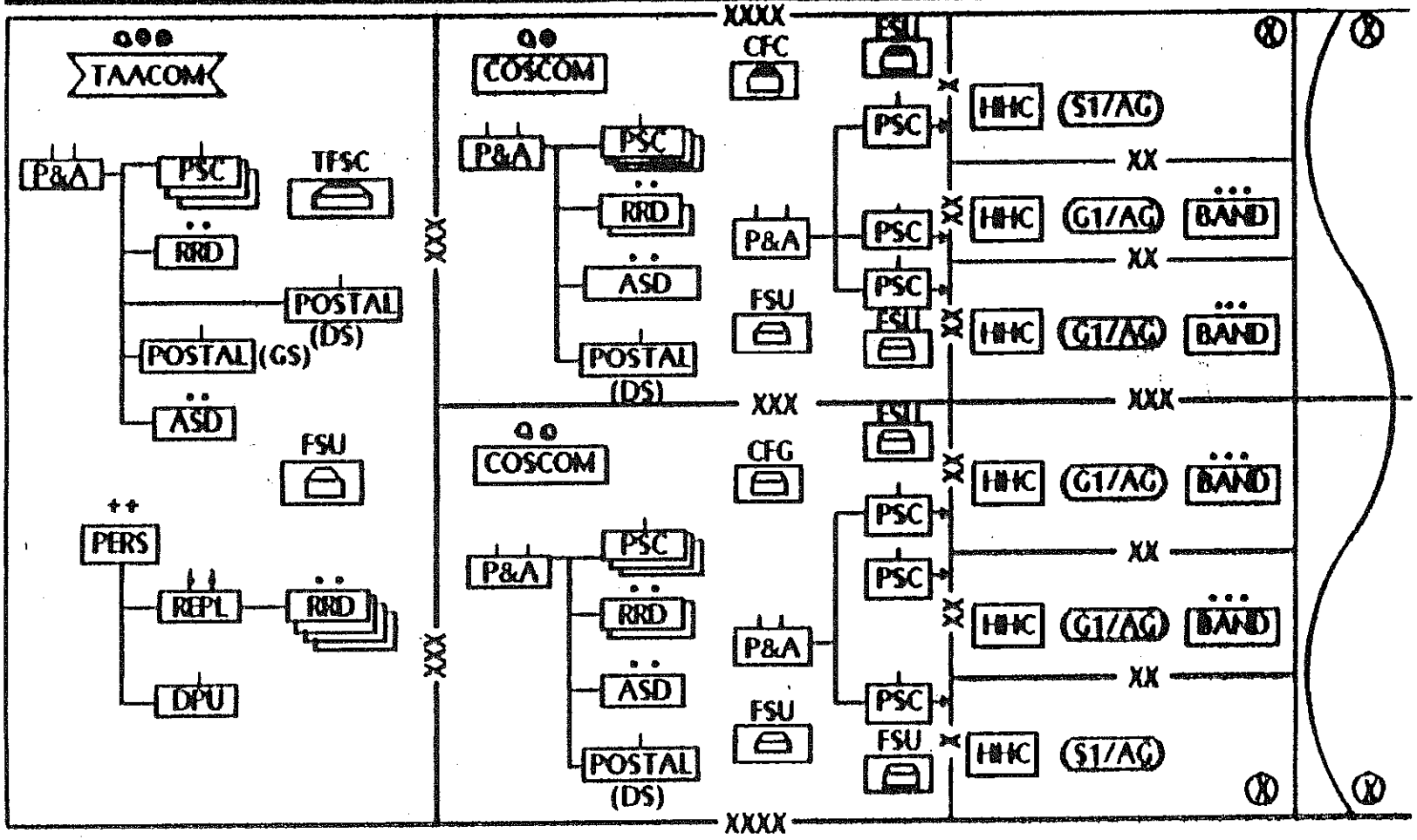
TAACOM
P&A
PSC
RRD
TFSC
POSTAL (DS)
POSTAL (GS)
ASD
FSU
PERS
REPL
RRD
DPU
COSCOM
CFC
P&A
PSC
RRD
ASD
POSTAL (DS)
FSU
PSC
PSC
PSC
FSU
COSCOM
CFG
P&A
PSC
RRD
ASD
POSTAL (DS)
FSU
PSC
PSC
PSC
FSU
HHC
(S1/AG)
HHC
(G1/AG)
BAND
HHC
(G1/AG)
BAND
HHC
(G1/AG)
BAND
HHC
(G1/AG)
BAND
HHC
(S1/AG)
XXXX
XXX
XX
XX
XX
XXX
XXX
XX
XX
XX
XX
XXXX

PSS SPR FORCE RUCTURE PANEL

UNIT STRUCTURE

STRUCTURE STRENGTH (TOTAL ARMY)

	PRE-AOE		AOE "L"		CAC MARK	
	UN	STR	UN	STR	UN	STR
PERSCOM	2	484	2	484	2	950
PSG	0	0	0	0	0	0
P & A BN	23	1,330	23	897	19	760
AG CO/PSC	113	15,450	111	12,062	116	12,367
POSTAL	59	1,595	30	2,593	50	1,619
TFSC/TFC	2	236	3	438	3	326
CFSG/CFG	5	498	5	590	5	425
FI CO/ AFSC/FSU	61	4,918	60	5,580	91	3,616
TOTAL		24,511		22,644		20,063

- AOE ("L") NARROWS GAP TO THE CAC MARK

PSS SPR FORCE STRUCTURE PANEL

UNIT STRUCTURE

STRUCTURE STRENGTH (ACTIVE ARMY)

	PRE-AOE		AOE "L"		CAC MARK	
	UN	STR	UN	STR	UN	STR
PERSCOM	2	484	2	484	2	950
PSG	0	0	0	0	0	0
P & A BN	3	171	3	120	8	320
AG CO/PSC	45	5,839	45	4,966	44	4,957
POSTAL	29	712	11	683	29	1,092
TFSC/TFC	2	236	2	292	2	186
CFSG/CFG	4	380	4	472	4	318
FI CO/AFSC/FSU	35	2,497	35	3,255	34	2,056
TOTAL		10,319		10,272		9,879

- AOE "L" GREATER THAN THE CAC MARK

PSS SPR FORCE . RUCTURE PANEL

UNIT STRUCTURE

DISCUSSION:

CURRENT AOE "L" DESIGN STRUCTURE ADVANTAGES ARE OUTWEIGHED BY THEIR DISADVANTAGES

- **AOE "L" DESIGN**
  - ADVANTAGES
  - DISADVANTAGES

PSS SPR FORCE STRUCTURE PANEL

UNIT STRUCTURE

AOE "L" DESIGN ADVANTAGES

- CORRECTS PSC SUPPORT RATIO IMBALANCE
- CONTRIBUTES TO DOWN-SIZING OF DIVISIONS
- ELIMINATES POSTAL OVERSTRUCTURE
- COMMAND & CONTROL FOR FI IMPROVED
- DIVISIONS BECOMING COMFORTABLE WITH G1/AG SETUP

PSS SPR FORCE STRUCTURE PANEL

UNIT STRUCTURE

AOE "L" DESIGN DISADVANTAGES

- PERCEIVED
  - AREA SUPPORT MAY NOT BE AS RESPONSIVE AS ORGANIC SUPPORT IN DIVISIONS

- ACTUAL
  - COMMAND & CONTROL OF PSCs DIFFERENT IN PEACE & WAR
  - PSS UNITS NOT AUTOMATICALLY IN THE DIVISION REAR AREA
  - MADE AG MORE AUTOMATION DEPENDENT
  - CREATED A TDA LINKAGE BILL FOR AG
  - ALO DOWNWARD ADJUSTMENT IS THE RULE VS EXCEPTION FOR TAILORING FSUs
  - DID NOT MEET THE CAC MARK

PSS SPR FORCE STRUCTURE PANEL

UNIT STRUCTURE

DISCUSSION:

THE EMERGING CONCEPT DOES NOT ADEQUATELY ADDRESS ALL FORCE STRUCTURE CONCERNS

- **AOE "L-PLUS" — EMERGING CONCEPT — SSC**
  - — BATTLEFIELD LAYDOWN
  - — STRUCTURE STRENGTH
  - — ADVANTAGES
  - — DISADVANTAGES
- **ADDITIONAL DESIGN CONSIDERATIONS — PANEL**
  - — THEATER LEVEL AG & FI CAPABILITY
  - — COMBINING GROUP HEADQUARTERS
  - — ELIMINATING GROUP HEADQUARTERS

PSS SPR FORCE STRUCTURE PANEL

UNIT STRUCTURE

AOE "L-PLUS" DESIGN

- AG & FI UNITS REMAIN ORGANIC TO EAD
- BOTH AREA & UNIT SUPPORT PROVIDED

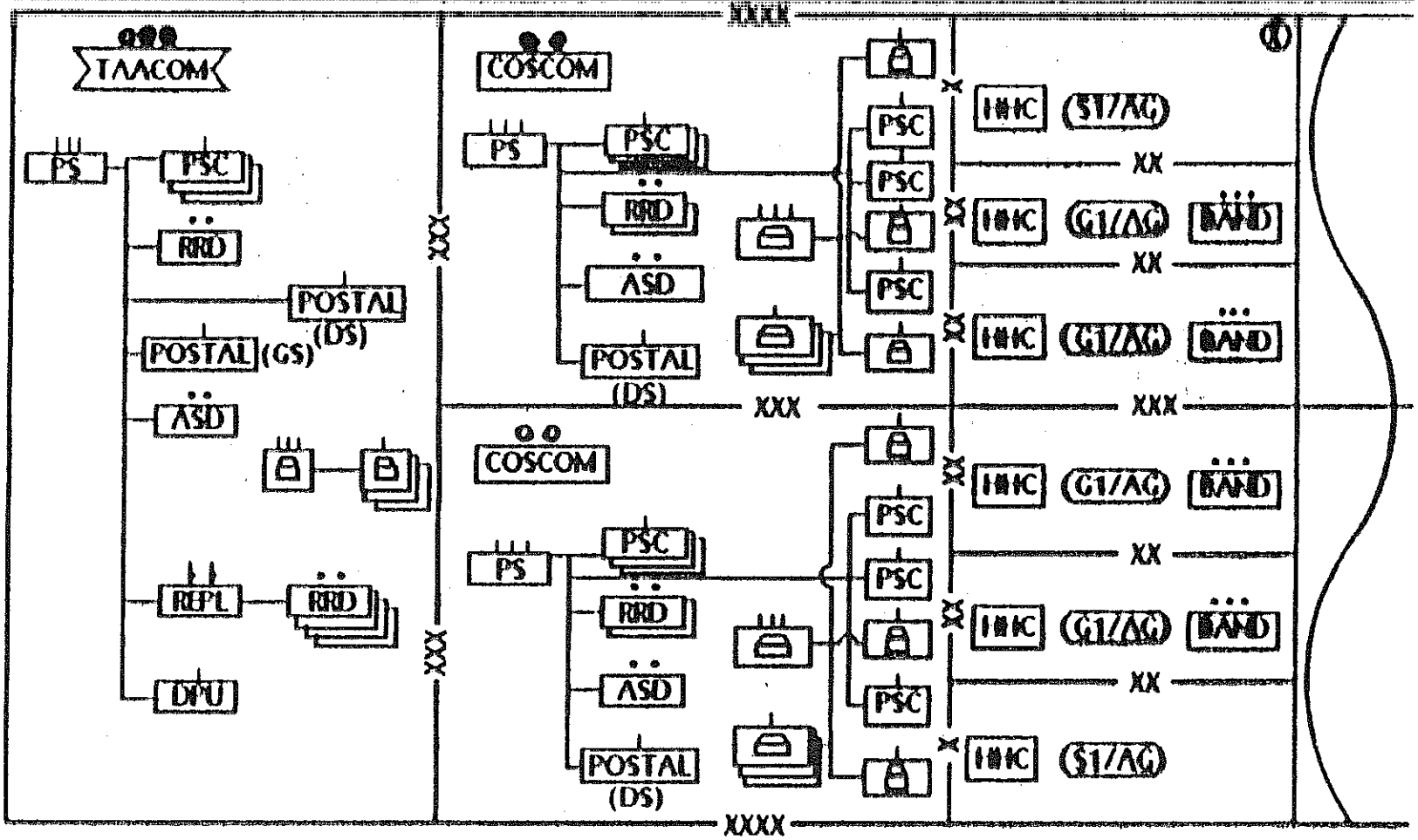
TAACOM
PS
PSC
RRD
POSTAL (DS)
POSTAL (GS)
ASD
REPL
RRD
DPU
XXX
COSCOM
PS
PSC
RRD
ASD
POSTAL (DS)
PSC
PSC
PSC
PSC
INIC
(S1/AG)
XX
INIC
(G1/AG)
BAND
XX
INIC
(G1/AG)
BAND
XXX
XXX
COSCOM
PS
PSC
RRD
ASD
POSTAL (DS)
PSC
PSC
PSC
PSC
INIC
(G1/AG)
BAND
XX
INIC
(G1/AG)
BAND
XX
INIC
(S1/AG)
XXXX

PSS SPR FORCE STRUCTURE PANEL

UNIT STRUCTURE

STRUCTURE STRENGTH (TOTAL ARMY)

	PRE-AOE		AOE "L"		AOE "L-PLUS"		CAC MARK	
	UN	STR	UN	STR	UN	STR	UN	STR
PERSCOM	2	484	2	484	0	0	2	950
PSG	0	0	0	0	9	540	0	0
P & A BN	23	1,330	23	897	0	0	19	760
AG CO/PSC	113	15,450	111	12,062	111	12,062	116	12,367
POSTAL	59	1,595	30	2,593	30	2,593	50	1,619
TFSC/TFC	2	236	3	438	0	0	3	326
CFSG/CFG	5	498	5	590	9	666	5	425
FI CO/ AFSC/FSU	61	4,918	60	5,580	111	6,556	91	3,616
TOTAL		24,511		22,644		22,417		20,063

PSS SPR FORCE STRUCTURE PANEL

UNIT STRUCTURE

STRUCTURE STRENGTH (ACTIVE ARMY)

	PRE-AOE		AOE "L"		AOE "L-PLUS"		CAC MARK	
	UN	STR	UN	STR	UN	STR	UN	STR
PERSCOM	2	484	2	484	0	0	2	950
PSG	0	0	0	0	7	420	0	0
P & A BN	3	171	3	120	0	0	8	320
AG CO/PSC	45	5,839	45	4,966	45	4,966	44	4,957
POSTAL	29	712	11	683	11	683	29	1,092
TFSC/TFC	2	236	2	292	0	0	2	186
CFSG/CFG	4	380	4	472	7	518	4	318
FI CO/AFSC/FSU	35	2,497	35	3,255	45	2,673	34	2,056
TOTAL		10,319		10,272		9,260		9,879

- AOE ("L-PLUS") MEETS THE CAC MARK & THEN SOME
- BILL PAYERS: PERSCOM, TFC, P&A BNs, CORPS/TAACOM AG SECTIONS
- TDA LINKAGE BILLS CREATED FOR PERSCOM + TFC

PSS SPR FORCE S. RUCTURE PANEL

UNIT STRUCTURE

AOE "L-PLUS" CONCEPTUAL REDESIGN ADVANTAGES

- ADDRESSES THE TRANSITION TO WAR ISSUE
- CREATES CLOSER COORDINATION THROUGH COLLOCATION — COMMON ALLOCATION RULES
- PROVIDES CENTRALIZED POINT OF CONTACT FOR CUSTOMER SUPPORT
- MEETS THE CAC MARK IN THE ACTIVE ARMY
- DESIGN SUPPORTS REQUIREMENTS
- REDESIGNED FI STRUCTURE ELIMINATES ALO TURBULENCE

PSS SPR FORCE STRUCTURE PANEL

UNIT STRUCTURE

AOE "L-PLUS" CONCEPTUAL REDESIGN DISADVANTAGES

- NO THEATER LEVEL TOE AG OR FI ORGANIZATIONS
- CREATES A POTENTIAL TDA LINKAGE BILL FOR FI (TFC) & AG (PERSCOM)
- INCREASES AUTOMATION REQUIREMENTS
- TRADE-OFFS/SAVINGS OF CONSOLIDATION VS COLLOCATION AG/FI NOT QUANTIFIED

PSS SPR FORCE STRUCTURE PANEL

UNIT STRUCTURE

ANOTHER WAY

PANEL

FIX

THEATER LEVEL AG/FI STRUCTURE

- **ADVANTAGES**
  - PROVIDES THEATER COMMANDER VISIBILITY OVER PSS FUNCTIONS
  - IDENTIFIES POC FOR THEATER AG/FI PLANS, POLICY & ISSUES
  - TECHNICAL SUPERVISION OF PERSONNEL & FINANCE CENTERS CENTRALIZED
  - ELIMINATES TDA LINKAGE BILL
- **DISADVANTAGE**
  - REQUIRES RESOURCING ABOVE EMERGING CONCEPT ("L-PLUS") LEVEL

PSS SPR FORCE STRUCTURE PANEL

UNIT STRUCTURE

THEATER LEVEL AG/FI STRUCTURE

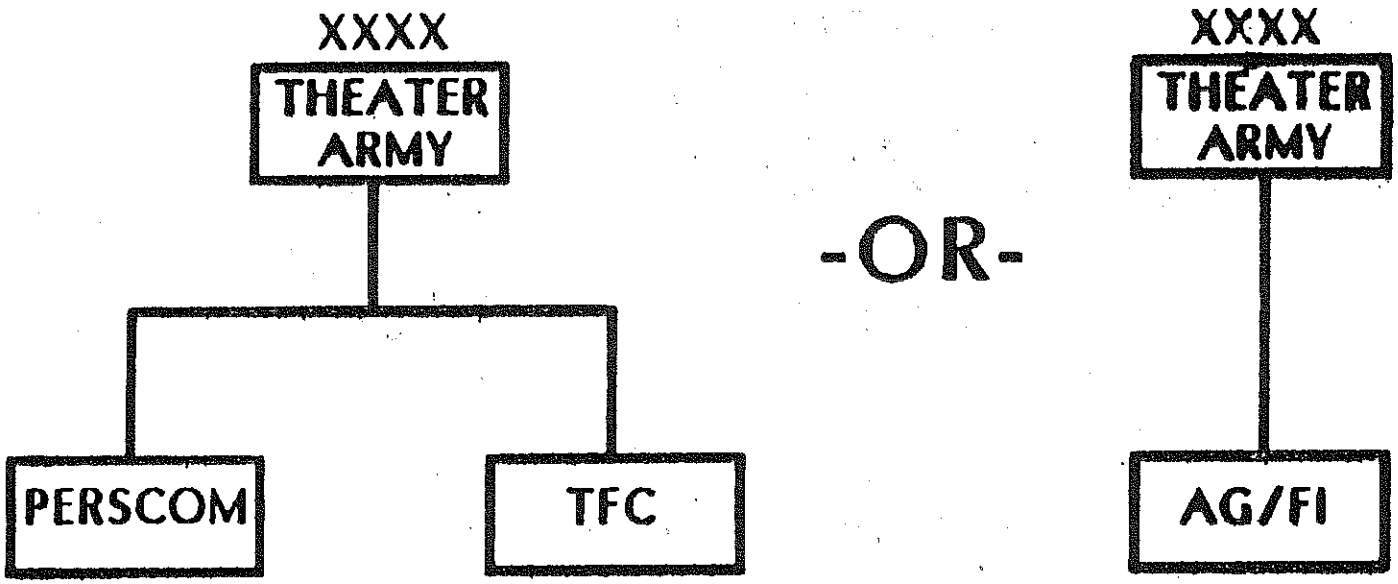

PSS SPR FORCE S. RUCTURE PANEL

UNIT STRUCTURE

ANOTHER WAY, cont.

PANEL

FIX

CONSOLIDATED AG/FI GROUP

- **ADVANTAGES**
  - SAVES OVERHEAD SPACES — NON-TECHNICAL FUNCTIONS ARE CONSOLIDATED & DUPLICATION ELIMINATED
  - POTENTIALLY PROVIDES BETTER SUPPORT TO SOLDIERS — SINGLE POC FOR AG/FI PLANS, POLICY & ISSUES
  - TECHNICAL SUPERVISION OF FSU & PSC NOT DILUTED
- **DISADVANTAGES**
  - SPAN OF CONTROL INCREASES
  - TECHNICAL KNOWLEDGE REQUIRED BY CDR INCREASES

PSS SPR FORCE STRUCTURE PANEL

UNIT STRUCTURE

CONSOLIDATED AG/FI GROUP

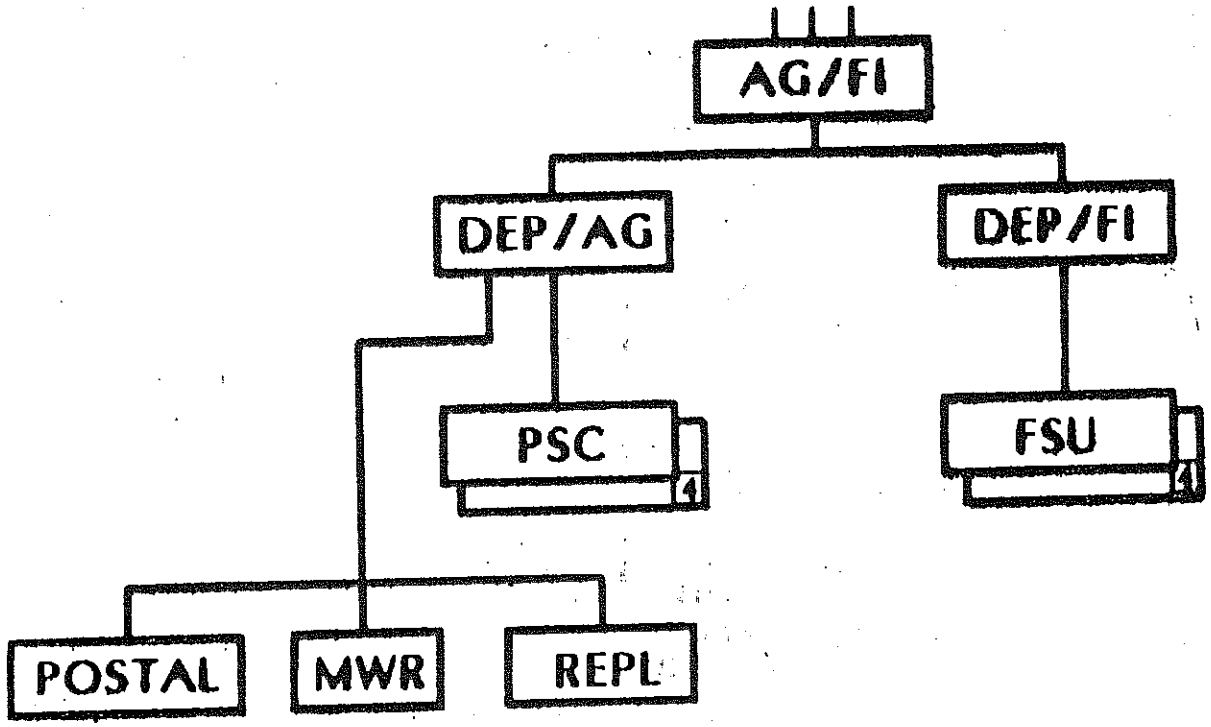

PSS SPR FORCE STRUCTURE PANEL

UNIT STRUCTURE

STRUCTURE STRENGTH (TOTAL ARMY)

	AOE "L-PLUS"		CONSOLIDATED AG/FI GP & TA HQS		CAC MARK	
	UN	STR	UN	STR	UN	STR
PERSCOM	0	0	2	574	2	950
TFC	0	0			0	0
PSG	9	540	0	0	19	760
CFG	9	666	0	0	116	12,367
PFG	0	0	9	1,035	50	1,619
P & A BN	0	0	0	0	3	326
PSC	111	12,062	111	12,062	5	425
POSTAL CO	30	2,593	30	2,593	91	3,616
FSU	111	6,556	111	6,556		
TOTAL		22,417		22,820		20,063

R18

PSS SPR FORCE STRUCTURE PANEL

UNIT STRUCTURE

STRUCTURE STRENGTH (ACTIVE ARMY)

	AOE "L-PLUS"		CONSOLIDATED AG/FI GP & TA HQS		CAC MARK	
	UN	STR	UN	STR	UN	STR
PERSCOM	0	0	2	574	2	950
TFC	0	0			2	186
PSG	7	420	0	0	0	0
CFG	7	518	0	0	4	318
PFG	0	0	7	805	0	0
P & A BN	0	0	0	0	8	320
PSC	45	4,966	45	4,966	44	4,957
POSTAL	11	683	11	683	29	1,092
FSU	45	2,673	45	2,673	34	2,056
TOTAL		9,260		9,701		9,879

- CREATES ADDITIONAL SAVINGS THROUGH ELIMINATION OF CORPS & TAACOM AG SECTIONS
- ELIMINATES TDA LINKAGE B[illegible]OR PERSCOM & TFC

PSS SPR FORCE STRUCTURE PANEL

UNIT STRUCTURE

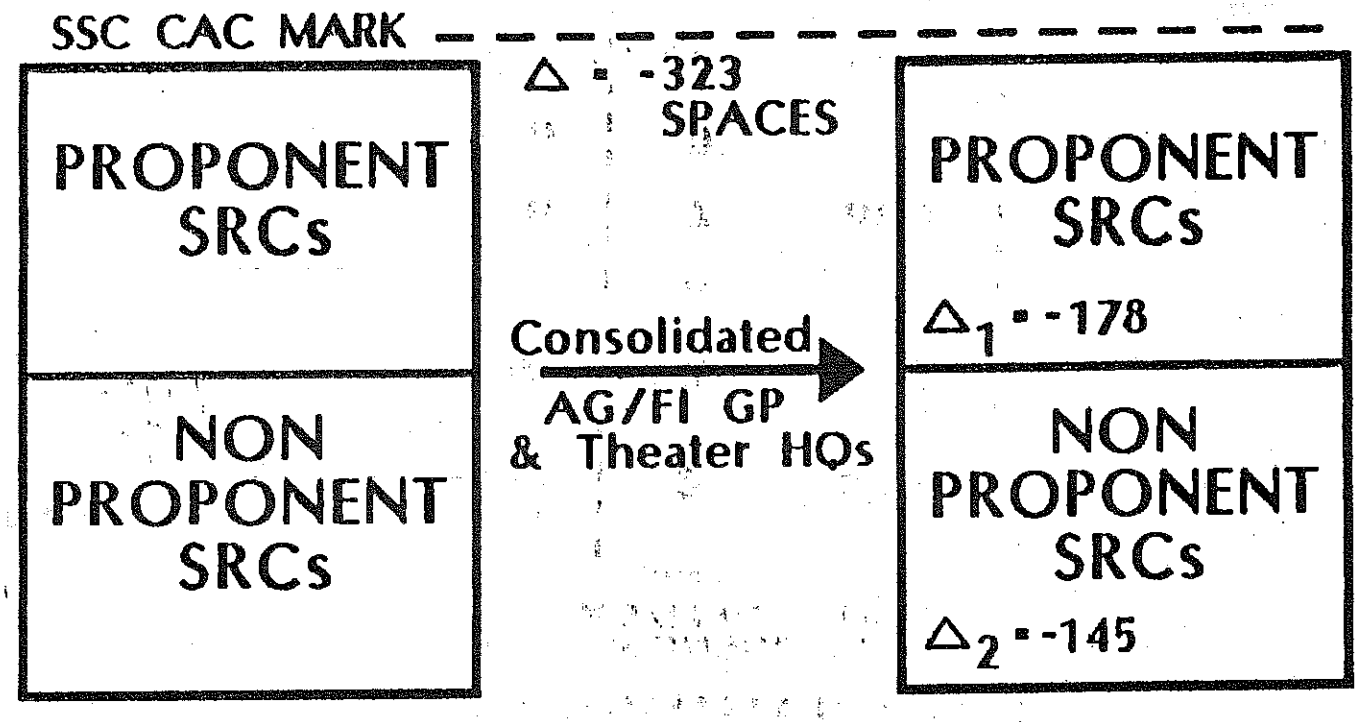

- TOTAL SSC CAC MARK STILL MET

PSS SPR FORCE STRUCTURE PANEL

UNIT STRUCTURE

STRUCTURE STRENGTH (ACTIVE ARMY)

	AOE "L-PLUS"		CONSOLIDATED AG/FI GP & TA HQS		CAC MARK	
	UN	STR	UN	STR	UN	STR
PERSCOM	0	0	2	574	2	950
TFC	0	0			2	186
PSG	7	420	0	0	0	0
CFG	7	518	0	0	4	318
PFG	0	0	7	805	0	0
P & A BN	0	0	0	0	8	320
PSC	45	4,966	45	4,966	44	4,957
POSTAL	11	683	11	683	29	1,092
FSU	45	2,673	45	2,673	34	2,056
TOTAL		9,260		9,701		9,879

- CREATES ADDITIONAL SAVINGS THROUGH ELIMINATION OF CORPS & TAACOM AG SECTIONS
- ELIMINATES TDA LINKAGE B[illegible]FOR PERSCOM & TFC

PSS SPR FORCE STRUCTURE PANEL

UNIT STRUCTURE

STRUCTURE STRENGTH (ACTIVE ARMY)

	AOE "L-PLUS"		CONSOLIDATED AG/FI GP & TA HQS		CAC MARK	
	UN	STR	UN	STR	UN	STR
PERSCOM	0	0	2	574	2	950
TFC	0	0			2	186
PSG	7	420	0	0	0	0
CFG	7	518	0	0	4	318
PFG	0	0	7	805	0	0
P & A BN	0	0	0	0	8	320
PSC	45	4,966	45	4,966	44	4,957
POSTAL	11	683	11	683	29	1,092
FSU	45	2,673	45	2,673	34	2,056
TOTAL		9,260		9,701		9,879

- CREATES ADDITIONAL SAVINGS THROUGH ELIMINATION OF CORPS & TAACOM AG SECTIONS
- ELIMINATES TDA LINKAGE BILL FOR PERSCOM & TFC

PSS SPR FORCE STRUCTURE PANEL

UNIT STRUCTURE

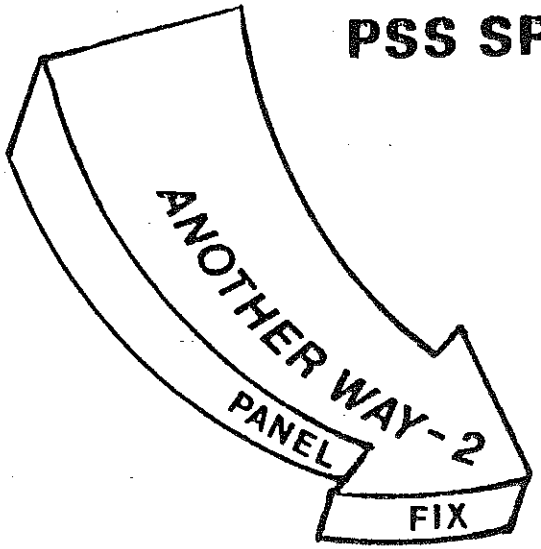

ASG/CSG ALTERNATIVE

- **ADVANTAGES**
  - SINGLE POC FOR AG/FI PLANS
  - SAVES ADDITIONAL OVERHEAD SPACES
  - MINIMUM IMPACT ON RC FORCE STRUCTURE
- **DISADVANTAGES**
  - TECHNICAL KNOWLEDGE REQUIRED BY ASG/CSG CDR INCREASES
  - TECHNICAL SUPERVISION OF FSU & PSC DILUTED
  - MAY REQUIRE CHANGES TO ASG/CSG TOEs

PSS SPR FORCE STRUCTURE PANEL

UNIT STRUCTURE

ASG/CSG ALTERNATIVE

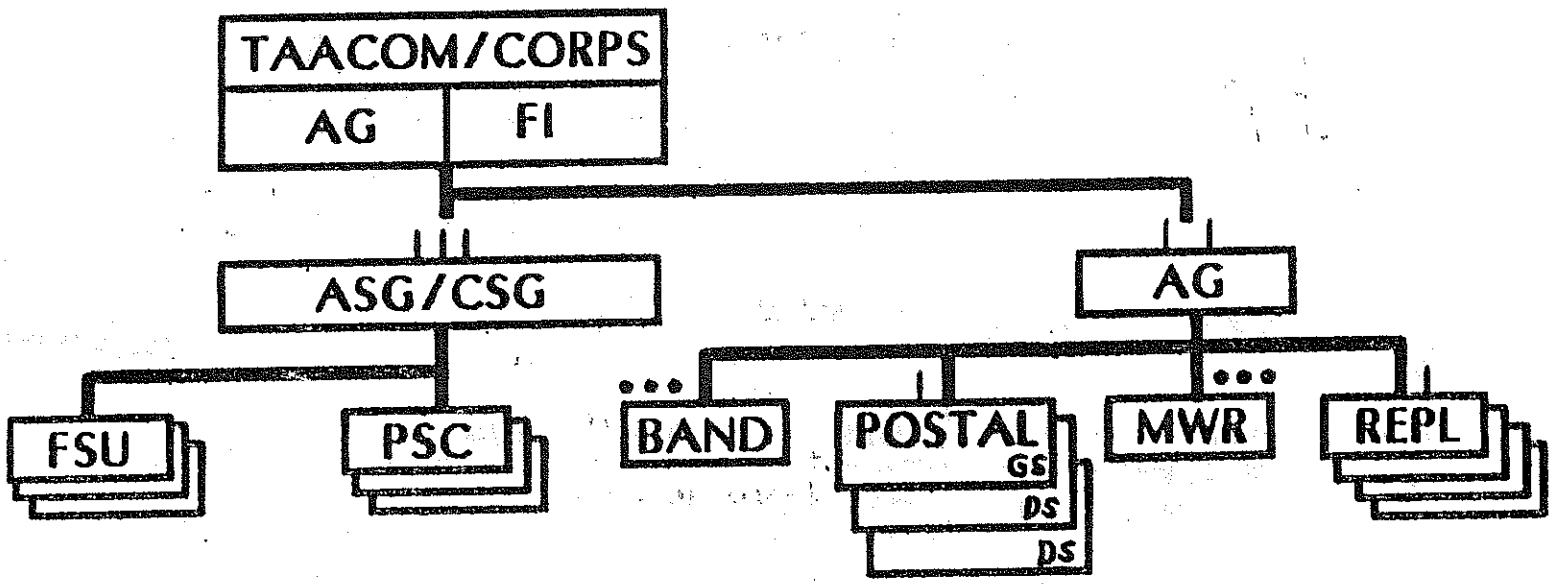

PSS SPR FORCE STRUCTURE PANEL

UNIT STRUCTURE

STRUCTURE STRENGTH (TOTAL ARMY)

	AOE "L-PLUS"		CONSOLIDATED AG/FI GP & TA HQS		CSG/ASG C² ALTERNATIVE		CAC MARK	
	UN	STR	UN	STR	UN	STR	UN	STR
PERSCOM	0	0	2	574	2	574	2	950
TFC	0	0					3	326
PSG	9	540	0	0	0	0	0	0
CFG	9	666	0	0	0	0	5	425
PFG	0	0	9	1,035	0	0	0	0
P & A BN	0	0	0	0	9	351	19	760
PSC	111	12,062	111	12,062	111	12,062	116	12,367
POSTAL CO	30	2,593	30	2,593	30	2,593	50	1,619
FSU	111	6,556	111	6,556	111	6,997	91	3,616
TOTAL		22,417		22,820		22,577		20,063

R20

PSS SPR FORCE STRUCTURE PANEL

UNIT STRUCTURE

STRUCTURE STRENGTH (ACTIVE ARMY)

	AOE "L-PLUS"		CONSOLIDATED AG/FI GP & TA HQS		CSG/ASG ALTERNATIVE		CAC MARK	
	UN	STR	UN	STR	UN	STR	UN	STR
PERSCOM	0	0	2	574	2	574	2	950
TFC	0	0					2	186
PSG	7	420	0	0	0	0	0	0
CFG	7	518	0	0	0	0	4	318
PFG	0	0	7	805	0	0	0	0
P & A BN	0	0	0	0	0	0	8	320
PSC	45	4,966	45	4,966	45	4,966	44	4,957
POSTAL	11	683	11	683	11	683	29	1,092
FSU	45	2,673	45	2,673	45	3,016	34	2,056
TOTAL		9,260		9,701		9,239		9,879

- MAKES CAC MARK & THEN SOME
  — MORE THAN OFFSETS PLUS-UP IN CORPS/TAACOM HQS
- *ELIMINATES TDA LINKAGE BILL FOR PERSCOM & TFC*

PSS SPR FORCE STRUCTURE PANEL

UNIT STRUCTURE

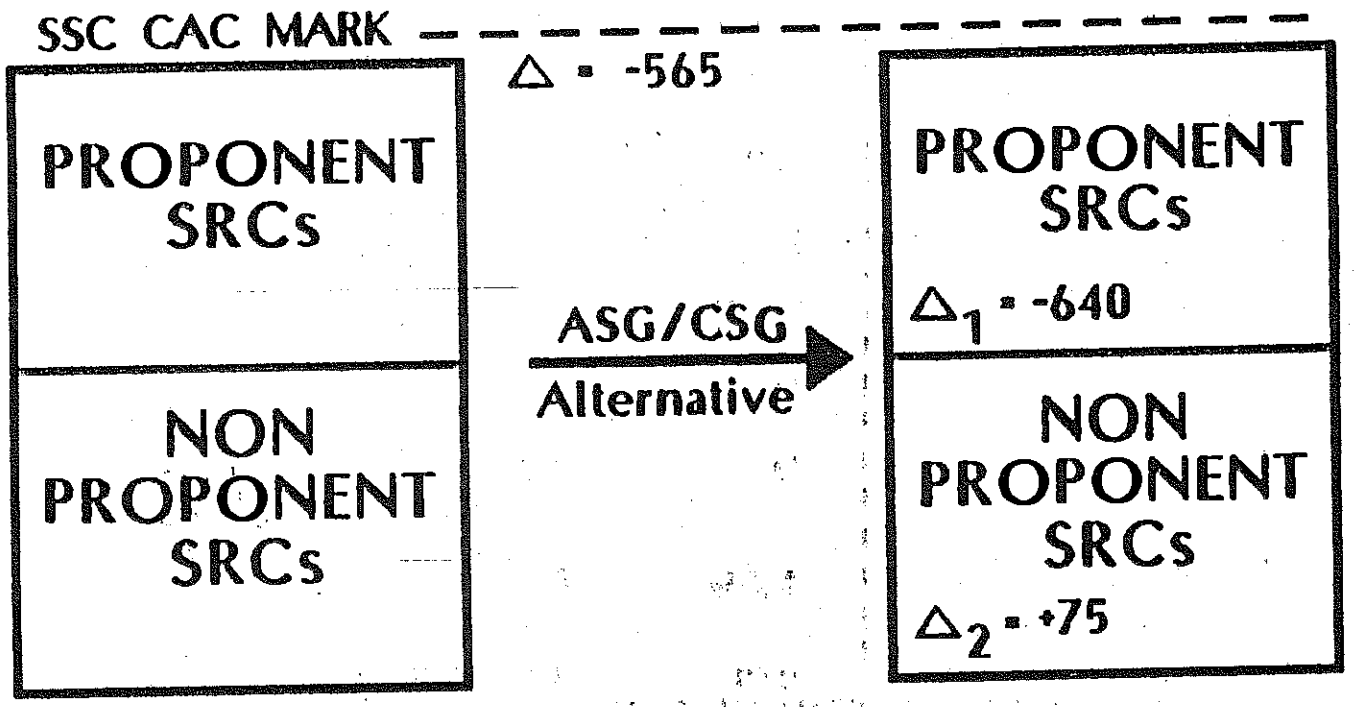

- TOTAL SSC CAC MARK STILL MET
- SSC PROPONENT SRC SAVINGS > CORPS/TAACOM HQS PLUS-UP

PSS SPR FORCE STRUCTURE PANEL

UNIT STRUCTURE

STRUCTURE STRENGTH (ACTIVE ARMY)

	AOE "L-PLUS"		CONSOLIDATED AG/FI GP & TA HQS		CSG/ASG ALTERNATIVE		CAC MARK	
	UN	STR	UN	STR	UN	STR	UN	STR
PERSCOM	0	0	2	574	2	574	2	950
TFC	0	0					2	186
PSG	7	420	0	0	0	0	0	0
CFG	7	518	0	0	0	0	4	318
PFG	0	0	7	805	0	0	0	0
P & A BN	0	0	0	0	0	0	8	320
PSC	45	4,966	45	4,966	45	4,966	44	4,957
POSTAL	11	683	11	683	11	683	29	1,092
FSU	45	2,673	45	2,673	45	3,016	34	2,056
TOTAL		9,260		9,701		9,239		9,879

- MAKES CAC MARK & THEN SOME
  — MORE THAN OFFSETS PLUS-UP IN CORPS/TAACOM HQS
- ELIMINATES TDA LINKAGE BILL FOR PERSCOM & TFC

PSS SPR FORCE STRUCTURE PANEL

UNIT STRUCTURE

ISSUE:

GIVEN CURRENT DOCTRINE & EMERGING CONCEPTS, DETERMINE IF PSS UNITS ARE PROPERLY STRUCTURED, LOCATED & MANNED TO SUPPORT THE AIRLAND BATTLE CONCEPT

DISCUSSION:

- **CURRENT PSS DESIGNS ARE OVERSTRUCTURED**
- **CURRENT AOE "L" DESIGN FORCE STRUCTURE ADVANTAGES ARE OUTWEIGHED BY THEIR DISADVANTAGES**
- **THE EMERGING CONCEPT DOES NOT ADEQUATELY ADDRESS ALL FORCE STRUCTURE CONCERNS**

PSS SPR FORCE STRUCTURE PANEL

UNIT STRUCTURE

RECOMMENDATIONS: *AGENCY*

- **CONTINUE THE DEVELOPMENT OF THE AOE "L-PLUS" EMERGING CONCEPT WITH CONSIDERATION GIVEN TO:** **SSC**
  - — COMBINING GROUP HQ AT BOTH CORPS & TAACOM

    — OR —
  - — PLACING AG & FI TECHNICAL FUNCTIONS IN CORPS & TAACOM HQ WITH COMMAND & CONTROL OF AG & FI UNITS PROVIDED BY THE EXISTING ASG/CSG STRUCTURE
  - — THE REQUIREMENT, AT THEATER LEVEL, FOR
    - SEPARATE PERSCOM & TFC

      — OR —
    - CONSOLIDATED PERSONNEL/FINANCE COMMAND

RESOURCES: **UNKNOWN**

PSS SPR FORCE STRUCTURE PANEL

TRANSITION

ISSUE:

GIVEN THE CURRENT RESOURCE CONSTRAINTS, DETERMINE IF MACOMs CAN PROPERLY TRANSITION FROM THE CURRENT STRUCTURE TO THE "L" SERIES TOEs

DISCUSSION:

- **P&A, POSTAL, FINANCE**
- **PAC STRUCTURE**

PSS SPR FORCE STRUCTURE PANEL

TRANSITION

ISSUE:

GIVEN THE CURRENT RESOURCE CONSTRAINTS, DETERMINE IF MACOMs CAN PROPERLY TRANSITION FROM THE CURRENT STRUCTURE TO THE "L" SERIES TOEs

DISCUSSION:

- **P&A, POSTAL, FINANCE**
- **PAC STRUCTURE**

PSS SPR FORCE STRUCTURE PANEL

TRANSITION

AOE "L" = AOE DESIGN WITH TACCS

AOE "L-PLUS" = SSC EMERGING CONCEPT

PSS SPR FORCE STRUCTURE PANEL

TRANSITION

ISSUE:

GIVEN THE CURRENT RESOURCE CONSTRAINTS, DETERMINE IF MACOMs CAN PROPERLY TRANSITION FROM THE CURRENT STRUCTURE TO THE "L" SERIES TOEs

DISCUSSION:

- **P&A, POSTAL, FINANCE**
- **PAC STRUCTURE**

PSS SPR FORCE STRUCTURE PANEL

TRANSITION

AOE DESIGN

AOE TOE (WARTIME FUNCTIONS)	+	TDA AUGMENTATION (PEACETIME DISPERSION)	+	TDA LINKAGE (PEACETIME FUNCTIONS)

POINT: ● THREE PIECES TO FORCE STRUCTURE CHALLENGE IN AOE ARE THE COST OF DOING BUSINESS

PSS SPR FORCE STRUCTURE PANEL TRANSITION

DISCUSSION: **P & A**

- **AOE "L" STRUCTURE TRANSITION**
- **AOE "L-PLUS" STRUCTURE TRANSITION**
- **AUTOMATION IMPACT**

PSS SPR FORCE STRUCTURE PANEL

TRANSITION

PSCs

MACOM	TOE AUTH PRE-AOE	TOE AUTH AOE "L" + "L-PLUS"	TOE AUTH (TACCS)	Δ	POPULATION SUPPORTED TOE CAPAB/RQMT
USAREUR	2,704	2,597	(FY 88)	-107	273K/217K
EUSA	220	298	(FY 88)	+78	31K/ 31K
FORSCOM	2,950	2,150	(FY 88)	-800	NA
TOTAL	5,874	5,045		-829	

TDA STRUCTURE

MACOM	TDA AUG	TDA LINKAGE
USAREUR	—	?
EUSA	30	?
FORSCOM	—	?

POINT: ● NEED TACCS TO ALIZE THE EFFICIENCIES

PSS SPR FORCE STRUCTURE PANEL TRANSITION

DISCUSSION: **P & A**

- **AOE "L" STRUCTURE TRANSITION**
- **AOE "L-PLUS" STRUCTURE TRANSITION**
- **AUTOMATION IMPACT**

PSS SPR FORCE STRUCTURE PANEL

TRANSITION

PSC AUTOMATION IMPACT

- DELAYS IN TACCS FIELDING
  - INCREASED TDA REQUIREMENT
  - USAREUR & FORSCOM WILL NOT TRANSITION TO "L" UNTIL ARRIVAL OF COMPUTER HARDWARE
- PERSONNEL QUALIFICATION
  - DECENTRALIZED EXECUTION OF PSS FUNCTIONS MAY REQUIRE INCREASED APTITUDE QUALIFICATIONS FOR ENLISTED PERSONNEL. (95 TO 100)

PSS SPR FORCE STRUCTURE PANEL TRANSITION

DISCUSSION: **P & A**

- **AOE "L" STRUCTURE TRANSITION**
- **AOE "L-PLUS" STRUCTURE TRANSITION**
- **AUTOMATION IMPACT**

P & A C^2

	CURRENT		AOE "L"		AOE "L-PLUS"
P&A BNs					
USAREUR	3		5		0
EUSA	0	+117 SPACES →	1		0
FORSCOM	0		0		0
P&A GPs					
USAREUR	0		0		3
EUSA	0		0	+6 SPACES →	1
FORSCOM	0		0		0
PERSCOMS					
USAREUR	1		1		0
EUSA	1		1	? →	0
FORSCOM	0		0		0

POINT: 123 C^2 SPACES RQD FROM CURRENT → "L- PLUS"

POINT: MACOMS WANT TOE PERSCOMs; ? = TDA LINKAGE BILL

PSS SPR FORCE STRUCTURE PANEL TRANSITION

DISCUSSION: **POSTAL**

- **AOE "L" STRUCTURE TRANSITION**
- **AOE "L-PLUS" STRUCTURE TRANSITION**
- **AUTOMATION IMPACT**

PSS SPR FORCE STRUCTURE PANEL

TRANSITION

POSTAL
DS & GS UNITS

	CURRENT			AOE "L" + "L-PLUS"			SUPPORTED POPULATION TOE RQMT PEACE/WAR
MACOM	TOE	TDA	TOTAL	TOE	TDA	TOTAL	
USAREUR	1,005	91	1,096	617	492	1,109	486K/217K
EUSA	182	0	182	123	45	168	100K/ 31K

FORSCOM *(NO REQUIREMENT — SUPPORT FROM US CIVILIAN POSTAL SYSTEM)*

PSS SPR FORCE STRUCTURE PANEL TRANSITION

DISCUSSION: **FINANCE**

- **AOE "L" STRUCTURE TRANSITION**
- **AOE "L-PLUS" STRUCTURE TRANSITION**
- **AUTOMATION IMPACT**

FINANCE FSUs & HQs

MACOM	MTOE CURRENT "L"		— NOTIONAL — TOE "L-PLUS"		Δ
USAREUR					
TFC	(1)	101	(0)	0	-101
CFG	(2)	184	(3)	222	+38
FSU	(18)	1,115	(23)	1,433	+318
		1,400		1,655	+255
EUSA					
TFC	(1)	109	(0)	0	-109
CFG	(0)	0	(1)	74	+74
FSU	(2)	160	(3)	166	+6
		269		240	-29
FORSCOM					
CFG	(2)	190	(2)	148	-42
FSU	(15)	1,072	(19)	1,174	+102
		1,262		1,322	+60
				TOTAL	+286

POINT: ● INCREASE IN FSUs IS THE PLUS-UP DRIVER