DRAFT

BATTALION THRU CORPS
PERSONNEL AND ADMINISTRATION ORGANIZATIONS
IN THE
ARMY OF EXCELLENCE

DRAFT

DRAFT

THIS BRIEFING OUTLINES THE AOE OBJECTIVE ORGANIZATIONAL STRUCTURES REQUIRED FOR PERSONNEL AND ADMINISTRATION AT BATTALION, DIVISION, AND CORPS.

INCLUDED ARE:

- BATTALION PAC
- DIVISION G1/AG
- PERSONNEL SERVICE COMPANY
- REPLACEMENT COMPANY
- POSTAL COMPANY
- MWR PLATOON
- COMMAND/CONTROL FOR THE ABOVE

DRAFT

DRAFT

HOW SHOULD THE BATTALION PERSONNEL AND ADMINISTRATION CENTER (PAC) BE ORGANIZED?

STANDARD BATTALION PAC STRUCTURE

DESCRIPTION	GRADE	MOS	STRENGTH	REMARKS
SUPVSR	E-7	75Z40	1	
PSNCO	E-6	75B30	1	
PERS ADMIN SPEC	E-5	75B20	1	AUTHORIZED WHEN BATTALION IS ASSIGNED 3 OR MORE LINE COMPANIES.
PERS ADMIN SPEC	E-4	75B10	1	
LEGAL CLERK	E-4	71D10	1	
ADMIN CLERK	E-4	71L10	1	
PERS ADMIN SPEC	E-3	75B10	2	AUTHORIZED WHEN BATTALION IS ASSIGNED 4 OR MORE LINE COMPANIES. 1 E3 IS AUTHORIZED FOR 3 OR LESS COMPANIES.
		TOTAL	8	

DRAFT

DRAFT

HOW SHOULD THE
DIVISION G1/AG SECTION
BE ORGANIZED?

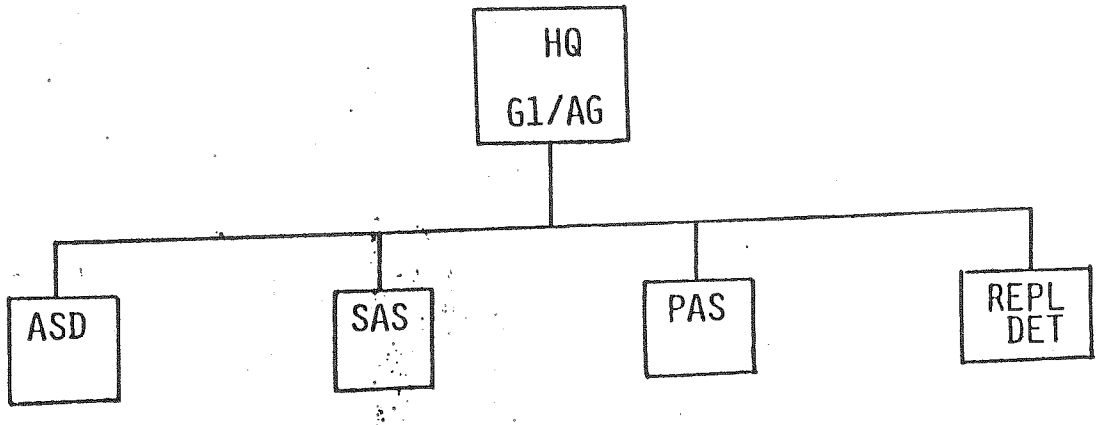

PRIMARY FUNCTIONS OF STRENGTH ACCOUNTING, CASUALTY REPORTING, REPLACEMENT OPERATIONS, WAR PLANNING AND HUMAN ESTIMATE OF BATTLEFIELD SITUATION

DRAFT

DRAFT

CONCEPT

A COMBINED G1/AG ELEMENT AT DIVISION WILL PROVIDE THE CAPABILITY FOR ESSENTIAL WARTIME FUNCTIONS OF STRENGTH ACCOUNTING, LIMITED REPLACEMENT OPERATIONS, LIMITED PERSONNEL ACCOUNTING AND CASUALTY REPORTING, LIMITED TRADITIONAL G1 FUNCTIONS, AND VERY LIMITED CLASSIFIED DOCUMENT CONTROL AND REPRODUCTION. LESS CRITICAL FUNCTIONS WILL BE PERFORMED BY THE CORPS PSC

ISSUE: RD FOR LID
SPECIALTY CODE 40 FOR G1/AG POSITION
FINANCE OFFICER

	LIGHT DIVISION	HEAVY DIVISION
G1/AG	05 41A 04 42A 04 44A E9 75Z E8 73Z E5 71L	05 41A 04 42A 04 44 A 03 42A E9 75Z E8 73Z E5 71L
SAMS	03 42A WO 711A E6 75C 2-E5 75C E4 75C 2-E3 75C	WO 711A E7 75Z E6 75C 2-E5 75C 3-E4 75C 4-E3 75C

DRAFT

DRAFT

G1/AG (CONTINUED)

PAS	03 42A E7 75Z E6 75E E5 75D E5 75E E4 75D 2-E4 75E	03 42A E7 75Z E6 75E E6 75D 2-E5 75E E5 75D 2-E4 75E 2-E4 75E 2-E3 75D 2-E3 75E
ASD	03 42A E7 71L E5 71L 6-E4 71L	03 42A E8 71L E6 71L 2-E5 71L 2-E4 71L 2-E3 71L
RD*	ADD RD W/NOTE	E8 75Z 3-E7 75Z E5 75B E5 76Y E4 76Y

* NOT IN LIGHT INFANTRY DIVISION CURRENTLY

DRAFT

DRAFT

How Should Corps Support for Pers and Admin be Organized?

Issue:

PSC? or DSPSC?

In support of Divisions

MTOE ISSUE

DRAFT

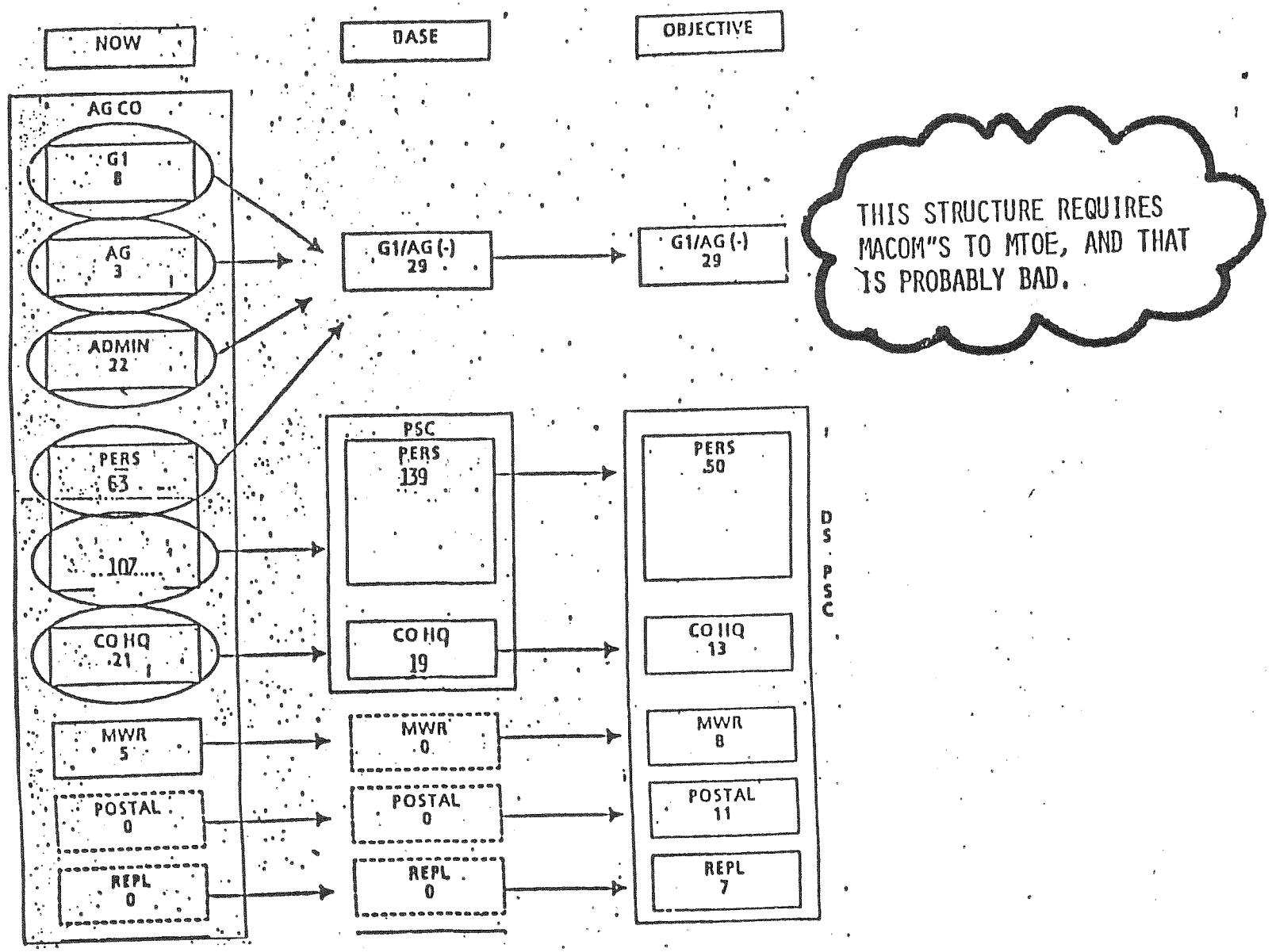

DRAFT

SUPPORT ISSUE

DIVISION SUPPORT RATIOS DOUBLE NON-DIVISION SUPPORT RATIOS

NON-DIV SUPPORT

H SERIES TYPE B PSC

8,000 107 = 75 1:75

J SERIES TYPE B PSC (CURRENT)

10,000 107 = 93 1:93

AOE TYPE B PSC (CURRENT)

8,000 89 = 90 1:90

DIVISION SUPPORT

J SERIES DSPSC (LIGHT)

10,000 50 = 200 1:200

J SERIES DSPSC (HEAVY)

16,000 78 = 205 1:205

YET, DIVISIONS WILL, ON THE AVERAGE, HAVE LARGER VOLUME OF CASUALTIES, PROMOTIONS, AWARDS AND REPLACEMENTS

DRAFT

P&A STRUCTURE CURRENTLY
IN FY88 PROGRAM FORCE

19 PSC's Types A - F
1 AG Co (2ID)
4 Lt Div DSPSC's
2 Abn Div DSPSC's (For 82d & 101st)
11 Hvy Div DSPSC's

CONCEPT: USE STANDARD PSC STRUCTURE TO SUPPORT BOTH DIV AND NON-DIV UNITS

ALIGN POPULATION SERVICED WITH AOE BDE/ DIV STRUCTURES

EXAMPLE: TYPE A = 5,000 (HVY SEP BDE)
TYPE B = 10,000 (LT DIV)
TYPE C = 13,000 (ABN DIV)

STRUCTURE TOE'S AT AFFORDABLE LEVELS

RESOURCE WITHIN AVAILABLE FY88 SPACES

INSURE EQUITABLE SERVICING RATIO'S

DRAFT

Draft

PSC's In Support Of AOE

Pers Supported	Type	ALO 1	ALO 2	ALO3
5 K	A	71	63	57
10 K	B	121	108	97
13 K	C	150	133	120
16 K	D	180	160	144
20 K	E	220	196	176
25 K	F	271	241	217
Support Ratios		1:96	1:110	1:125

DRAFT

P&A BUILDING BLOCKS

PRIMARY WARTIME
P&A FUNCTIONS

G1/AG

SECONDARY WARTIME
P&A FUNCTIONS

PSC

NON-DEPLOYING
PEACETIME FUNCTIONS

TDA
AUGMENTATION

DRAFT

COMPARISON OF PSC'S

	POP SVC			ALO 1 STRUCTURE		
	CURRENT	CONCEPT	Δ	CURRENT	CONCEPT	Δ
A	5,000	5,000	-	94	71	-14%
B	8,000	10,000	+25%	125	121	-3%
C	11,000	13,000	+18%	158	150	-5%
D	14,000	16,000	+14%	199	180	-10%
E	17,000	20,000	+18%	230	220	-4%
F	20,000	25,000	+25%	271	271	-

DRAFT

COMPO 1 FY 88 SPACES AVAILABLE FOR ALLOCATION

PSC	2627
AG Co	236
DSPSC(L)	356
DSPSC (ABN/AA)	214
DSPSC (HEAVY)	1130
	4563

DRAFT

PSC PROJECTED STRENGTH ALLOCATIONS

POPULATION SERVICED	TYPE OF PSC	PSC STRENGTH (ALO 3)	DIV	NON DIV PSC
5	A	57	4	5
10	B	97	2	4
13	C	120	11	4
16	D	144	1	3
20	E	176		2
25	F	217		1
		TOTAL:	18	19

FY 88 ALLOCATIONS 4563

SPACES USED 4542

DIFFERENCE = 21 --------3 REPLACEMENT DETACHMENTS FOR LIGHT INFANTRY DIVISIONS

DRAFT

PSC OVERHEAD

TODAY TYPE B OR C PSC	RECOMMENDED ALL PSC
E4 CLK TYP	O2 CHF, CO SPT DIV
O2 CHF, CO-SPT DIV	E8 1ST SGT
E8 1ST SGT	E6 SUPPLY SGT
E6 SUPPLY SGT	E5 UNIT CLK
E5 UNIT CLK	E4 ARMORER
E4 ARMORER	E4 LT WHL VEH MECH
E4 LT WHL VEH MECH	(E4 WIRE INST)*
E4 WIRE INST	E3 SWBD OPER
E3 SWBD OPER	

*1 PER P&A BN

PSC OVERHEAD (CONTINUED)

E6 NBC NCO

E6 MAINT SUPV

E5 DAS3 RPR

E4 UTIL EQUIP MECH

E6 DAS3 RPR

E6 FOOD SVC SUPV

E5 1ST COOK

E4 COOK

E3 COOK

E6 NBC NCO

(E5 DAS3 RPR)**

(E4 UTIL EQUIP MECH)**

(E6 DAS3 RPR)**

COOKS PER AR 570-2 RULES***

**WHERE DAS3 AUTHORIZED AND INSTALLED

***AR 570-2 RULES FOR COOKS - NORMAL OPS

PERSONNEL TO BE FED	NUMBER COOKS
0-62	2
63-104	3
105-164	4
165-232	5

COMMAND AND CO[illegible] OF PSC

A. IN GARRISON

B. WHILE DEPLOYED

C. FULLY MOBILIZED

	IN PLACE OR "GARRISONED" A	DEPLOYMENT B		MOBILIZATION "FULL MOBILIZATION" C
		"DIVISION" W/O PSC	"DIVISION" W/PSC	
CURRENT AOE PROPOSAL	G1 / AG	VOID	G1 / AG	P&A BN

DRAFT

...AND CONTROL OF PSC/ESTABLISHMENT OF INSTALLATION AG

A. IN GARRISON

B. WHILE DEPLOYED

C. FULLY MOBILIZED

	IN PLACE OR "GARRISONED"	DEPLOYMENT "DIVISION" W/O PSC	DEPLOYMENT "DIVISION" W/PSC	MOBILIZATION "FULL MOBILIZATION"
	A	B		C
CURRENT AOE PROPOSAL	G1 / AG		G1 / AG	P&A BN
WORKSHOP RECOMMENDATION	INSTALLATION OR AREA AG	INSTALLATION OR AREA AG	G1 / AG	P&A BN

THE INSTALLATION AG WILL SERVE AS A COMMAND AND CONTROL LINK BETWEEN THE PSC AND THE CORPS WHEN THE SERVICED DIVISION DEPLOYS.

DRAFT

DRAFT

OUTSTANDING ISSUES

- 2 BRIGADE DIVISION SUPPORT
- HEAVY SEPARATE BRIGADE SUPPORT
- FORWARD DEPLOYED BRIGADE SUPPORT
- ARMORED CAVALRY REGIMENT SUPPORT
- DAS3 SPACES

DRAFT

CURRENT CORPS

PERSONNEL SERVICE SUPPORT

P&A BN

(SUBORDINATE UNIT OF A COSCOM)

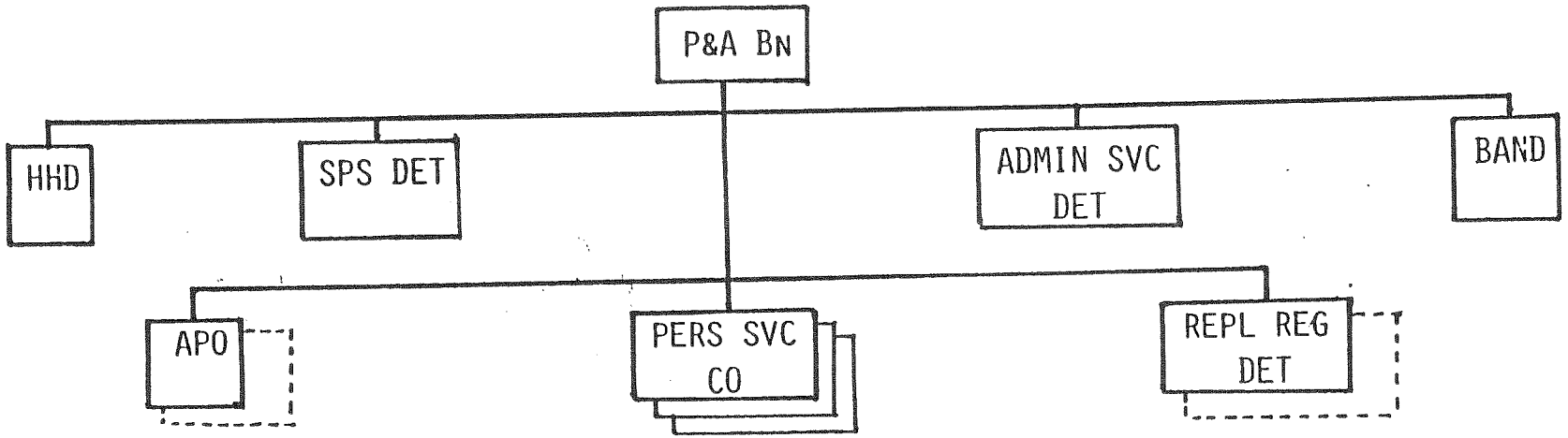

NOTES: - ONLY 1 PER COSCOM

- ADEQUATE WHEN POSTAL, MWR, AND ALL P&A ASSETS WERE COMMANDED WITHIN THE DIVISION

PERSONNEL AND ADMINISTRATION BN

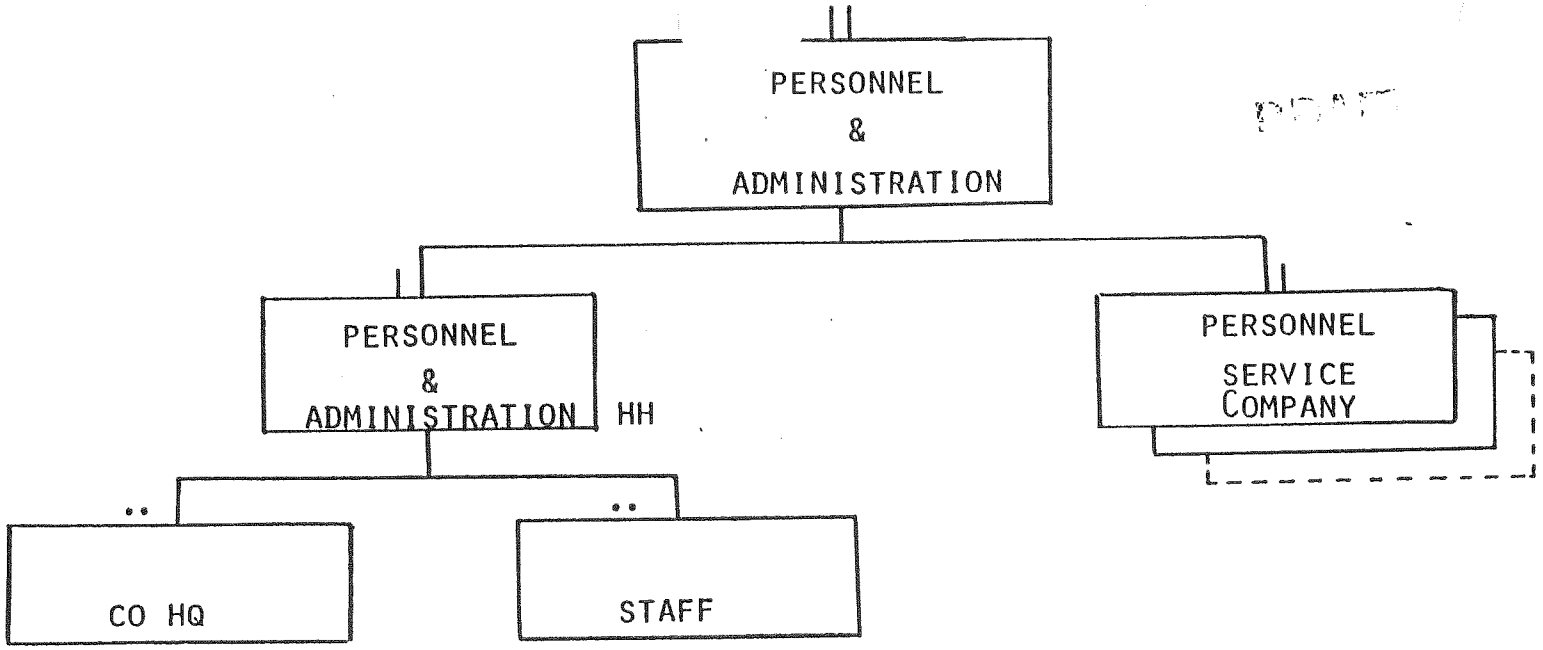

DRAFT

P & A BATTALION

' ELIMINATE

..MWR

..POSTAL OPERATIONS

..REPLACEMENT OPERATIONS

DRAFT

DRAFT

UNIT AG TEAMS, POSTAL

SRC 12550H2AA	LVL 1	LVL 2	LVL 3
OFF	1		
WO			
ENL	3		
AGG	4		

SRC 12550H2AB	LVL 1	LVL 2	LVL 3
OFF	1		
WO			
ENL	3		
AGG	4		

SRC 12550H2AC	LVL 1	LVL 2	LVL 3
OFF	2		
WO			
ENL	4		
AGG	6		

B REQUIREMENTS

49	52	52	48	40	3	52
15	21	21	15	13	0	21
7	7	7	8	6	4	7
0	0	0	0	0	0	0
0	0	0	0	0	0	0
0	0	0	0	0	0	0
71	80	80	71	59	7	80

C

11	9	9	10	8	15	9
5	8	8	4	2	3	8
1	1	1	1	1	1	1
0	0	0	0	D-	0	0
0	0	0	0	0	0	0
0	0	0	0	0	0	0
17	18	18	15	11	19	18

AB

	4	4	4	4	4	4	4	4	4	4	4
	0	0	0	0	0	0	0	0	0	0	0
	0	0	0	0	0	0	0	0	0	0	0
	4	4	4	4	4	4	4	4	4	4	4
											1
									67		76
									71		80

FY95 FY97

AR/WF

12550H2AB

	TAA-90	PFCA I POM FORCE ARSTAF RULES	PFCA II AUX FORCE ARSTAF RULES	PFCA III AUX FORCE AUX RULES	CAC'S REVIEW	CONFERENCE RECOMMENDATION
RATO	.100 PER WKLD 22 LR 1 TO 3	.100 PER WKLD 22 LR 1 TO 3	.100 PER WKLD 22 LR 1 TO 3	.100 PER WKLD 22 LR 1 TO 3	.100 PER WKLD 22 LR 1 TO 3	.100 PER W 22 LR 1 TO
DMA	.100 PER WKLD 22 IN LR 1 TO 3	.100 PER WKLD 22 IN LR 1 TO 6	.100 PER WKLD 22 IN LR 1 TO 3	.100 PER WKLD 22 LR 1 TO 3	.100 PER WKLD 22 LR 1 TO 3	.100 PER W 22 IN LR 1 6
REA	.100 PER WKLD 22 LR 1 TO 3	.100 PER WKLD 22 LR 1 TO 3	.100 PER WKLD 22 IN LR 1 TO 3	.100 PER WKLD 22 LR 1 TO 3	NOT INCLUDED ON REVIEW	.100 PER W 22 LR 1 TO

12550H2AC

	TAA-90	PFCA I POM FORCE ARSTAF RULES	PFCA II AUX FORCE ARSTAF RULES	PFCA III AUX FORCE AUX RULES	CAC'S REVIEW	CONFERENCE RECOMMENDATION
RATO	.67 PER WKLD 22 IN LR 4 TO 5	.67 PER WKLD 22 IN LR 4 TO 5	.67 PER WKLD 22 IN LR 4 TO 5	.67 PER WKLD 22 IN LR 4 TO 5	.067 PER WKLD 22 IN LR 4 TO 5	.67 PER WKLD 22 IN LR 4 TO 5
DMA	N/A	.100 PER WKLD 22 IN LR 1 TO 6	NOT PLAYED	NOT PLAYED	.67 PER WKLD 22 IN LR 3 TO 4	.100 PER W 22 IN LR 1 TO 6
REA	.67 PER WKLD 22 IN LR 4 TO 4	.67 PER WKLD 22 IN LR 4 TO 4	.67 PER WKLD 22 IN LR 4 TO 4	.067 PER WKLD 22 IN LR 4 TO 5	NOT INCLUDED ON REVIEW SHEET	.67 PER WKLD 22 IN LR 4 TO 4

	TAA-90	PFCA I POM FORCE ARSTAF RULES	PFCA II AUX FORCE ARSTAF RULES	PFCA III AUX FORCE AUX RULES	CAC'S REVIEW	CONFERENCE RECOMMENDATION
RATO						
DMA						
REA						

AUX STRUCTURE W = WORKLOAD FACTOR

AC PROGRAM

	19	19	20	20	20	20	20	20	20	20	20
	0	0	0	0	0	0	0	0	0	0	0
	21	21	21	21	21	21	21	21	21	21	21
	40	40	41	41	41	41	41	41	41	41	41
									0		0
									0		0
									0		0
									0		0
									41		41

FY95 FY97

DRAFT

PFCA I II III

66 FILE

DTM	BR	DESCRIPTION	SPC	STR	NR	STR	LV
	AG	IN POSTAL	12550H2AC66			33	11
	AG	IN HQ (150C00)	12550H2AC0	6		6	11
	AG	IN MAIL PROC (150000)	12550H2FC0	19		19	11
	AG	IN POST FIN (150000)	12550H2G00	7		7	11
	AG	IN POSTAL CLAIMS	12550H2HA0	1		1	11

DTM	BR	DESCRIPTION	SPC	STR	NR	STR	LV
	AG	IN POSTAL	12550H2A666			23	11
	AG	IN HQ (110000)	12550H2AB0	6		6	11
	AG	IN MAIL PROC (110000)	12550H2F00	13		13	11
	AG	IN POST FIN (110000)	12550H2GC0	5		5	11
	AG	IN POSTAL CLAIMS	12550H2HA0	1		1	11

DTM	BR	DESCRIPTION	SPC	STR	NR	STR	LV
	AG	IN POSTAL	12550H20166			53	11
	AG	IN HQ (110000)	12550H2AC0	6		6	11
	AG	IN MAIL PROC (110000)	12550H3H0	27		27	11
	AG	IN FIN/SUP (110000)	12550H3JA0	9		9	11
	AG	IN DIRECTORY SVC (110000)	12550H2KB0	9		9	11
	AG	IN INTERNATIONAL EXCHANGE OFC	12550H2LB0	2		2	11

DTM	BR	DESCRIPTION	SPC	STR	NR	STR	LV
	AG	DEI REPLACEMENT REGULATING	12560H2AB66			34	11
	AG	IN DEI HQ 406	12560H2AB0	6		6	11
	AG	IN PESS 400	12560H2CB0	8		8	11
	AG	IN REPL CONT	12560H2FA0	12	4	12	11
	AG	IN REPL OPNS 400	12560H2GB0	8	1	8	11

DTM	BR	DESCRIPTION	SPC	STR	NR	STR	LV
	AG	IN POSTAL	12550H2C266			39	11
	AG	IN MAIL PROC (130000)	12550H21A0	15		15	11
	AG	IN FIN/SUP (130000)	12550H3JA0	5		5	11
	AG	IN DIRECTORY SVC (130000)	12550H2PA0	4		4	11
	AG	IN INTERNATIONAL EXCHANGE OFC	12550H2LA0	1		1	11

DRAFT

TAA 90

66 FILE

ADJUTANT GENERAL TEAMS

DTM	BR	DESCRIPTION	SPC	STR	NR	S
	AG	IN POSTAL	12550H2AC66			
	AG	IN HQ (150C00)	12550H2AC0	6		
	AG	IN MAIL PROC (150000)	12550H2FC0	19		
	AG	IN POST FIN (150000)	12550H2G00	7		
	AG	IN POSTAL CLAIMS	12550H2HA0	1		

DTM	BR	DESCRIPTION	SPC	STR	NR	S
	AG	IN POSTAL	12550H2A666			
	AG	IN HQ (110000)	12550H2AB0	6		
	AG	IN MAIL PROC (110000)	12550H2F00	13		
	AG	IN POST FIN (110000)	12550H2GC0	5		
	AG	IN POSTAL CLAIMS	12550H2HA0	1		

DTM	BR	DESCRIPTION	SPC	STR	NR	S
	AG	IN POSTAL	12550H20166			
	AG	IN HQ (110000)	12550H2AC0	6		
	AG	IN MAIL PROC (110000)	12550H3H0	27		
	AG	IN FIN/SUP (110000)	12550H3JA0	9		
	AG	IN DIRECTORY SVC (110000)	12550H2KB0	9		
	AG	IN INTERNATIONAL EXCHANGE OFC	12550H2LB0	2		

DTM	BR	DESCRIPTION	SPC	STR	NR	S
	AG	DEI REPLACEMENT REGULATING	12560H2AB66			
	AG	IN DEI HQ 406	12560H2AB0	6		
	AG	IN PESS 400	12560H2CB0	8		
	AG	IN REPL CONT	12560H2FA0	12	4	
	AG	IN REPL OPNS 400	12560H2GB0	8	1	

DTM	BR	DESCRIPTION	SPC	STR	NR	S
	AG	IN POSTAL	12550H2C266			
	AG	IN MAIL PROC (130000)	12550H21A0	15		
	AG	IN FIN/SUP (130000)	12550H3JA0	5		
	AG	IN DIRECTORY SVC (130000)	12550H2PA0	4		
	AG	IN INTERNATIONAL EXCHANGE OFC	12550H2LA0	1		

DRAFT

DRAFT

DS
POSTAL UNITS

1 SRC
TOE# 12550J510 DS PSTL CO

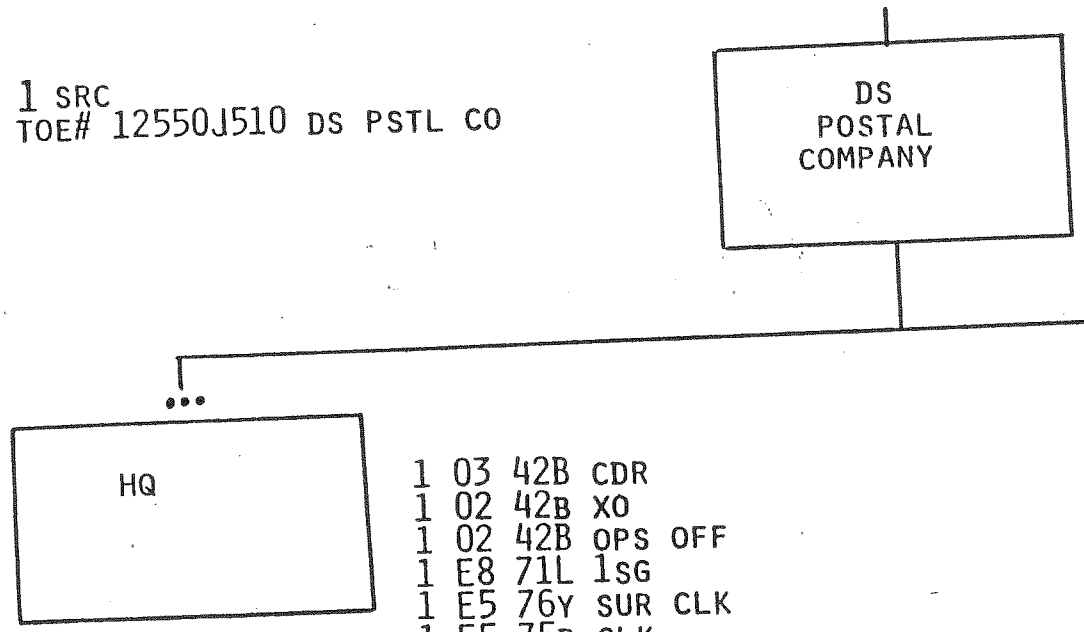

TOE# 12550J510 - 1 PLT
TOE# 12550J520 - 2 PLTS
TOE# 12550J530 - 3 PLTS
TOE# 12550J540 - 4 PLTS
TOE# 12550J550 - 5 PLTS

45-102*

1 03 42B CDR
1 02 42B XO
1 02 42B OPS OFF
1 E8 71L 1SG
1 E5 76Y SUR CLK
1 E5 75B CLK
6

TOE# 12550J520

1 E7 72L SUPV
2 E6 71L SUPV
1 E5 71L SUPV
8 E4 71L CLK
7 E3 71L CLK
19

45 SPACES - DS POSTAL PLATOON
102 SPACES - DS POSTAL COMPANY

DRAFT

POSTAL UNITS

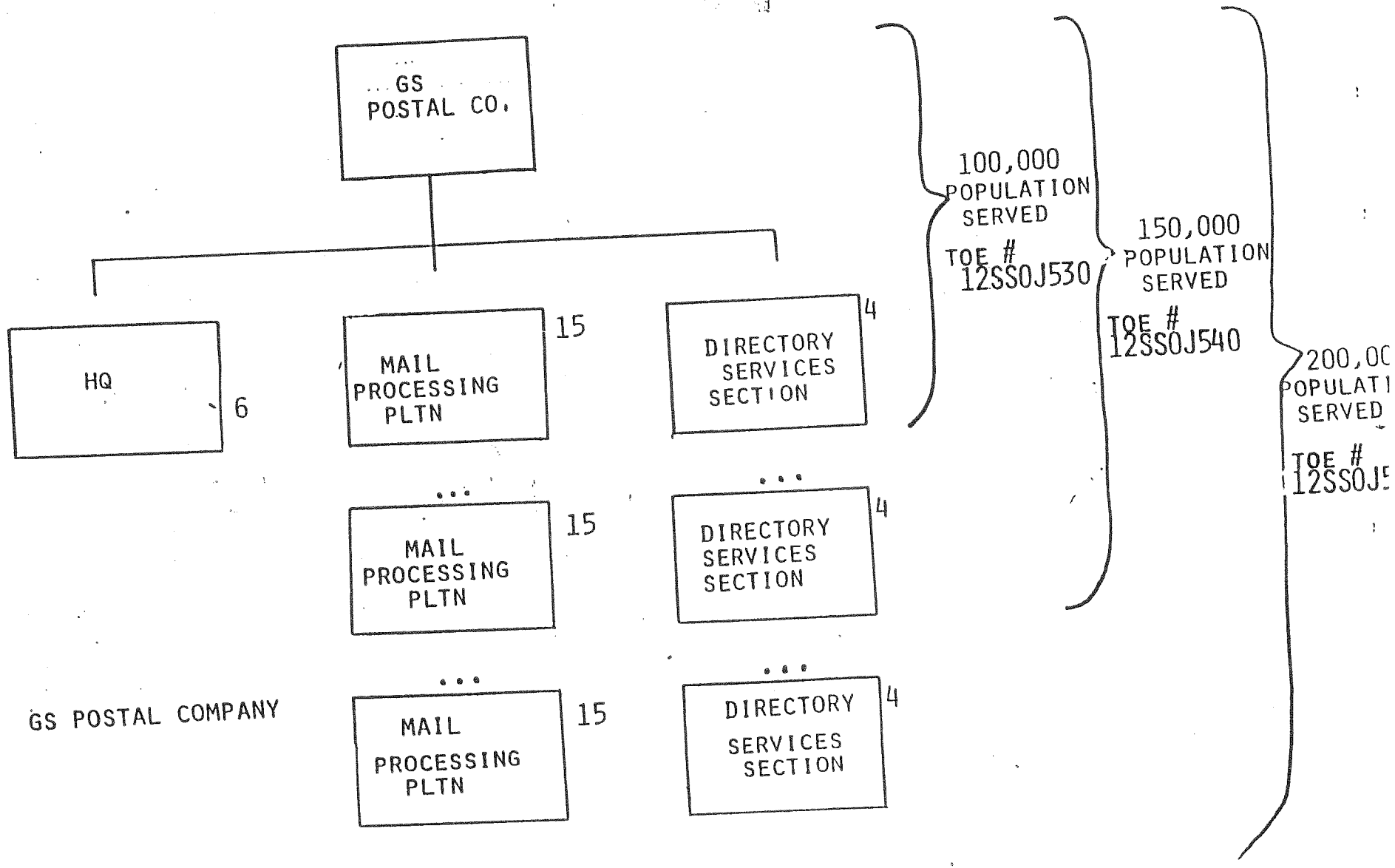

SRC
12SS0J530 GS POSTAL COMPANY

DRAFT

DRAFT

Replacement Company at Corps

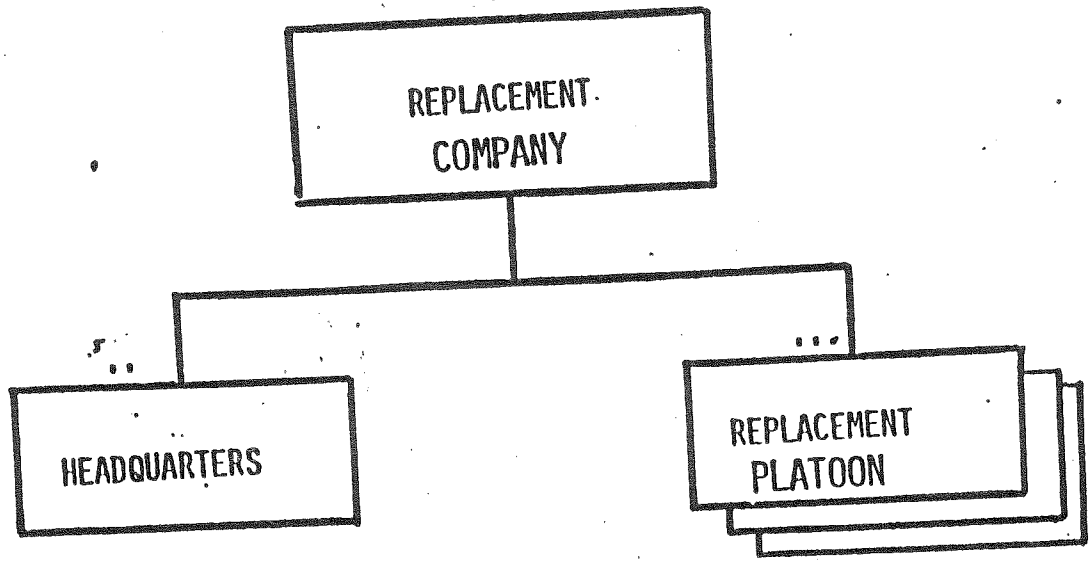

- PROVIDES REPLACEMENTS WITHIN THE CORPS AREAS
  - .. FOR CORPS UNITS
  - .. PROVIDES REPLACEMENTS FOR DIVISIONAL UNITS, AS NECESSARY

DRAFT

PERSONNEL AND ADMINISTRATION

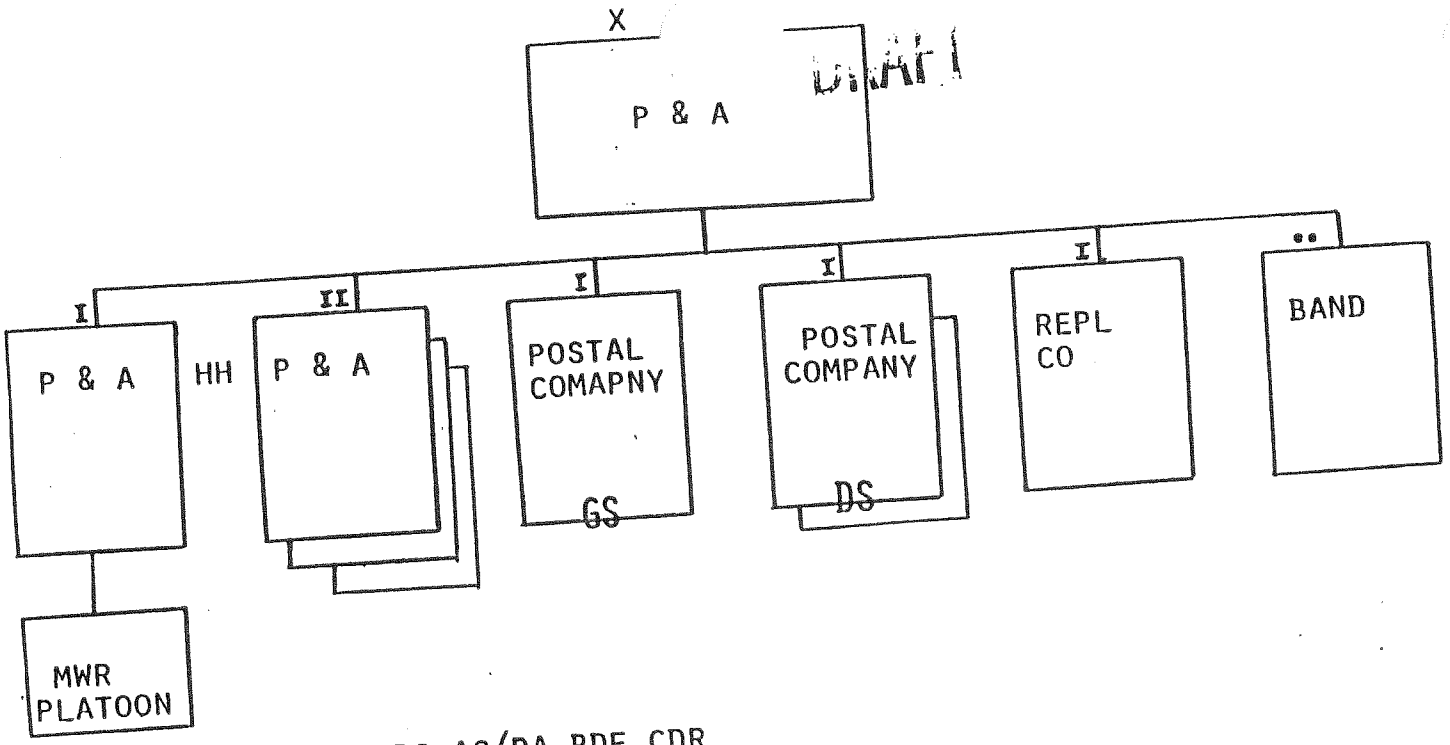

- DUAL HATTED CORPS AG/PA BDE CDR
- DRIVEN BY INCREASE -
  2 + 3 P & AS BN'S, 3 POSTAL CO'S, REPL CO, BAND & MWR PLATOON
- FORMALIZES CPOC CONCEPT

DRAFT

Headquarters Company of the P&A BDE - AOE

DRAFT

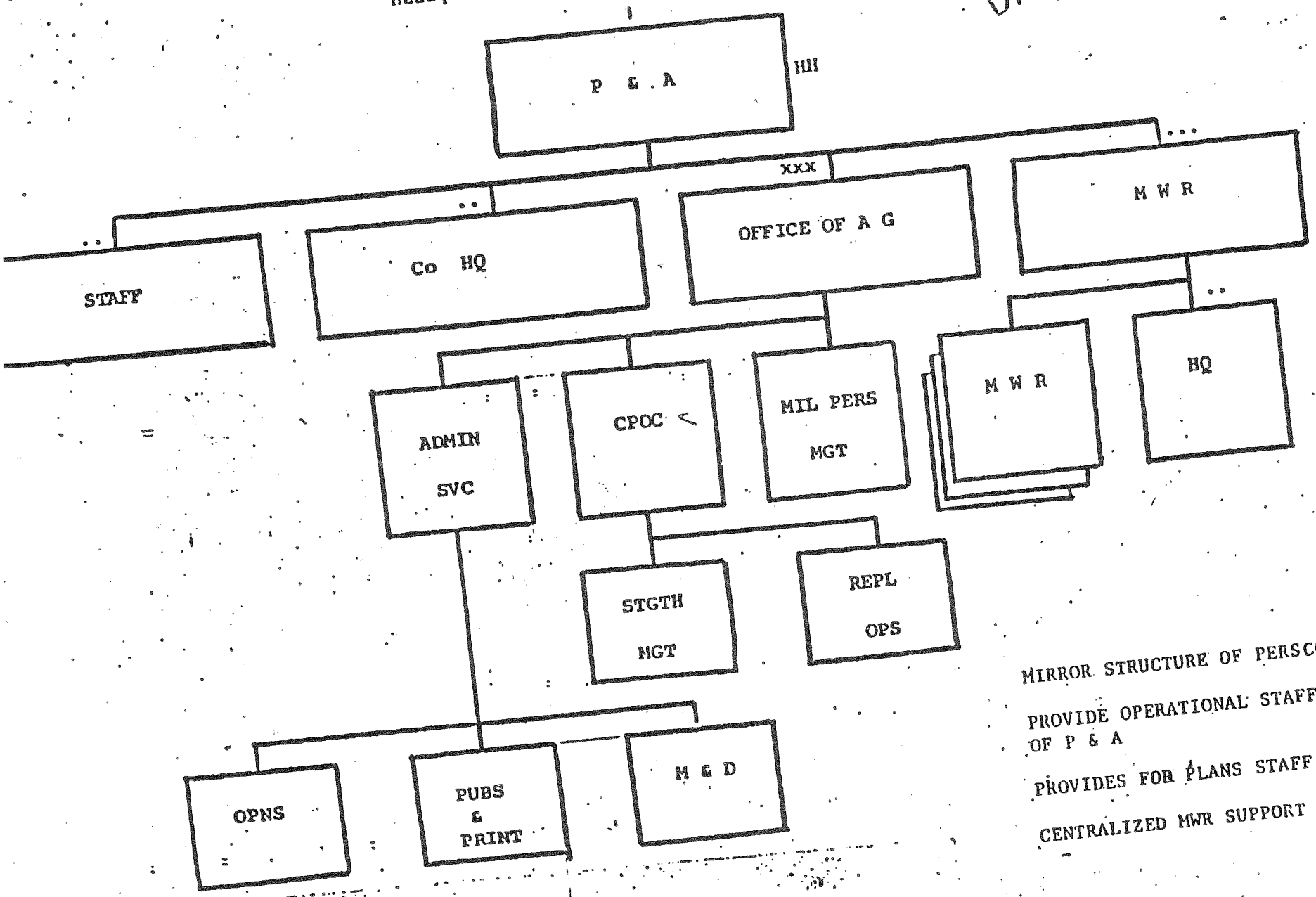

MIRROR STRUCTURE OF PERSCOM

PROVIDE OPERATIONAL STAFF FOR CONTROL
OF P & A

PROVIDES FOR PLANS STAFF IN OFFICE OF

CENTRALIZED MWR SUPPORT FOR ENTIRE C

SUM

CONCEPT STANDARDIZES ORGANIZATIONS AND SUPPORT RATIOS WITHIN CORPS.

- PSC PROVIDES P&A SUPPORT TO ALL CORPS UNITS
- PSC'S SUPPORT LARGER POPULATIONS WITH FEWER SPACES

PROVIDES CORPS-LEVEL COMMAND AND CONTROL ORGANIZATIONS FOR P&A FUNCTIONS

- NECESSARY DUE TO INCREASED SPAN OF CONTROL (8 ORGANIZATIONS VICE 1)
- FORMALIZES CPOC