Permanent File

Rd 8-15-83 Note 8/16/83 Dan DDB

UNITED STATES MARINE CORPS
MARINE CORPS BASE
CAMP LEJEUNE, NORTH CAROLINA 28542

IN REPLY REFER TO
FAC/REA/el
6280
10 AUG 198

From: Commanding General
To: Commanding General, 2d Marine Division, Fleet Marine Force, Camp Lejeune, North Carolina 28542

Subj: Classified Materials Incinerator, Building S-355, North Carolina Air Pollution Permit Number 4320R dtd 2 May 1983

Encl: (1) N.C. Dept. of Natural Resources and Community Development ltr w/attached Permit No. 4320R dtd 2 May 1983

1. The enclosure forwards the permit to operate the subject facility with appropriate conditions. Repairs are currently being made by the Base Maintenance Division to activate the facility. Prior to the resumption of incinerator operations request that you notify this command for scheduling of an on-site inspection by North Carolina Air Quality Branch personnel. The 1 July date for the inspection has been extended by State personnel.

2. As indicated in the permit, reporting of the incinerator operation may be required by the State at some future date. This requirement can be met by simply keeping a log of the date, times, approximate quantity of materials burned, and any major equipment repairs.

3. Per paragraph 3 of subject permit, a notice must be made with the State for visible emissions exceeding one hour's duration except during start-up or shutdown. In the unlikely event of such emissions, request that pertinent information be provided to the Natural Resources and Environmental Affairs Division, extensions 5003/2195.

4. The future use of this incinerator for destruction of classified materials should be pursued only as a backup technique in favor of the classified materials mulcher operated by Base Communication-Electronics Division. For a long-term solution to these needs, this command is including a mulcher within the project for relocation of the Division Headquarters to the Old Hospital area.

5. For further information regarding this matter, please contact Mr. Bob Alexander, office of the Assistant Chief of Staff, Facilities, extension 3034.

M. G. LILLEY
By direction

Blind copy to:
CEO (w/o encl)
BMO (w/o encl)
NREAD (w/encl)

North Carolina Department of Natural Resources & Community Development
James B. Hunt, Jr., Governor
Joseph W. Grimsley, Secretary

DIVISION OF ENVIRONMENTAL MANAGEMENT

May 2, 1983

J. T. Marshall
Colonel, U. S. Marine Corps
Assistant Chief of Staff, Facilities
U. S. Marine Corps Base
Camp LeJeune, North Carolina 28542

Subject: Permit No. 4320R
U. S. Marine Corps Base
Camp LeJeune, North Carolina
Onslow County

Dear Colonel Marshall:

In accordance with your application received March 17, 1983, we are forwarding herewith Permit No. 4320R to U. S. Marine Corps Base, Camp LeJeune, North Carolina, for the construction and/or operation of air pollution abatement facilities and/or emission sources.

If any parts, requirements, or limitations contained in this Permit are unacceptable to you, you have the right to an adjudicatory hearing before a hearing officer upon written demand to the Director within 30 days following receipt of this Permit, identifying the specific issues to be contended. Unless such demand is made, this Permit shall be final and binding.

This Permit shall be effective from the date of issuance until April 1, 1986, is nontransferable to future owners and operators, and shall be subject to the conditions and limitations as specified therein.

Sincerely,

Charles Wakild
Regional Supervisor

CW/WCC/cfp

Enclosure
cc: Mike Sewell
Robert Jamieson
Wilmington Regional Office
Central Files

NORTH CAROLINA

ENVIRONMENTAL MANAGEMENT COMMISSION

DEPARTMENT OF NATURAL RESOURCES AND COMMUNITY DEVELOPMENT

Raleigh

P E R M I T

For the Discharge of Air Contaminants Into the Atmosphere

In accordance with the provisions of Article 21B of Chapter 143, General Statutes of North Carolina as amended, and other applicable Laws, Rules and Regulations,

PERMISSION IS HEREBY GRANTED TO

U. S. Marine Corps Base
Camp LeJeune, North Carolina

FOR THE

operation of a No. 2 oil-fired, 75 pounds per hour, type 0 waste, multiple chamber incinerator with a 350,000 BTU per hour (minimum) primary burner and a 350,000 BTU per hour (minimum) secondary burner and appurtenances installed to remove particulate, visible, and odorous emissions, and for the discharge of the associated stack gases into the outdoor atmosphere at its facility located at Camp LeJeune, North Carolina, Onslow County,

in accordance with the application received March 17, 1983, and in conformity with the plans, specifications, and other supporting data, all of which are filed with the Department of Natural Resources and Community Development and are incorporated as part of this Permit.

This Permit shall be effective from the date of its issuance until April 1, 1986, is nontransferable to future owners and operators, and shall be subject to the following specified conditions and limitations:

1. The facility shall be properly operated and maintained at all times in such a manner as to effect an overall reduction in air pollution in keeping with the application and otherwise to reduce air contamination to the extent necessary to comply with applicable Environmental Management Regulations, including 15 NCAC 2D .0505, .0521, and .0522.

2. Reports on the operation and maintenance of the facility shall be submitted by the Permittee to the Division of Environmental Management at such intervals and in such form and detail as may be required by the Division. Information required in such reports may include, but is not limited to, process weight rates, firing rates, hours of operation, and preventive maintenance schedules.

3. When particulate, visible, and/or odorous emissions, due to a malfunction of the process or control equipment, are or may be in excess of Environmental Management Regulations, the Regional Supervisor, Wilmington Region, (919) 256-4161, of the Division of Environmental Management shall be notified as promptly as possible but in no case later than 12 hours following the start of such malfunction. Such notice shall specify the nature and cause of the malfunction, the time when such malfunction was first observed, the expected duration, and an estimate of the rate of emission. The term malfunction shall not be construed to include start-up or shut-down periods when these emissions exceed Environmental Management Regulations when the duration of such period is less than one hour. Furthermore, any period of duration one hour or greater when these emissions exceed Environmental Management Regulations shall be construed as a malfunction. This malfunction reporting requirement does not allow the operation of the facility in excess of Environmental Management Regulations.

4. The incinerator shall be evaluated for compliance with Environmental Management Commission Regulation(s) 15 NCAC 2D .0521 by the Division of Environmental Management by July 1, 1983. This Permit shall become voidable, with proper notice to the Permittee if the results of the evaluation indicate that the incinerator does not meet applicable laws, rules, and regulations.

5. The Permittee at least ninety (90) days prior to the expiration of this Permit shall request its extension by letter. The letter should include the permit number and a description of modifications, if any, that have been made.

6. This Permit is subject to revocation or modification upon a determination that information contained in the application or presented in support thereof is incorrect, conditions under which this Permit was granted have changed, or violations of conditions contained in this Permit have occurred.

7. A violation of any term or condition of this Permit shall subject the Permittee to enforcement procedures contained in North Carolina General Statutes 143-215.114, including assessment of civil penalties.

Permit issued this the 2nd day of May, 1983.

NORTH CAROLINA ENVIRONMENTAL MANAGEMENT COMMISSION

Charles Wakild, Regional Supervisor
Division of Environmental Management
By Authority of the Environmental Management Commission

UNITED STATES MARINE CORPS
MARINE CORPS BASE
CAMP LEJEUNE, NORTH CAROLINA 28542

IN REPLY REFER TO
NREAD/DDS/jvc
6280
11 MAR 1983

RECEIVED
MAR 17 1983
WILMINGTON REGIONAL OFFICE
DEM
Rec'd AQ 3/21/83

Mr. Charles Wakild
Regional Supervisor
Division of Environmental Management
North Carolina Department of Natural Resources
and Community Development
7225 Wrightsville Avenue
Wilmington, North Carolina 28403

Dear Mr. Wakild:

The purpose of this letter is to request that Permit Number 4320 to U. S. Marine Corps Base, Camp Lejeune, North Carolina, for the construction and/or operation of air pollution abatement facilities and/or emission sources be renewed.

No modifications or alterations have been made to the permitted incinerator subsequent to the issuance of the original permit. The incinerator has been moved approximately 20 feet to the inside of Building Number 355. The purpose of moving the incinerator was to protect the controls from adverse impact of rainfall and to facilitate use in inclement weather.

If you have any further question on this matter please contact Mr. Danny Sharpe, telephone (919) 451-5003.

Sincerely,

J. T. Marshall

J. T. MARSHALL
Colonel, U. S. Marine Corps
Assistant Chief of Staff, Facilities
By direction of the Commanding General

6280/4

File

North Carolina Department of Natural Resources & Community Development

James B. Hunt, Jr., Governor Joseph W. Grimsley, Secretary

DIVISION OF ENVIRONMENTAL MANAGEMENT

September 8, 1981

Mr. C.G. Cooper
Commanding General, U.S. Marine
Corps
Marine Corps Base
Camp Lejeune, North Carolina 28542

Subject: Permit No. 4641R
Marine Corps Base
Camp Lejeune, North Carolina

Dear General Cooper:

In accordance with your application received August 24, 1981, we are forwarding herewith Permit No. 4641R to Marine Corps Base, Camp Lejeune, North Carolina for the construction and/or operation of air pollution abatement facilities and/or emission sources.

If any parts, requirements, or limitations contained in this permit are unacceptable to you, you have the right to an adjudicatory hearing before a hearing officer upon written demand to the Director within thirty (30) days following receipt of this permit, identifying the specific issues to be contended. Unless such demand is made, this permit shall be final and binding.

This permit shall be effective from the date of issuance until April 1, 1986, is nontransferable to future owners and operators, and shall be subject to the conditions and limitations as specified therein.

For Federal PSD increment tracking purposes, changes to the facility have consumed a maximum of 9.91 lb/hr of particulate and 71.53 lb/hr of SO_2.

Sincerely,

Charles Wakild
Regional Supervisor

Enclosure

cc: Mike Sewell
Robert Jamieson
Wilmington Regional Office
Central Files

NORTH CAROLINA

ENVIRONMENTAL MANAGEMENT COMMISSION

DEPARTMENT OF NATURAL RESOURCES AND COMMUNITY DEVELOPMENT

Raleigh

P E R M I T

For the Discharge of Air Contaminants Into the Atmosphere

In accordance with the provisions of Article 21B of Chapter 143, General Statutes of North Carolina as amended, and other applicable Laws, Rules and Regulations,

PERMISSION IS HEREBY GRANTED TO

Marine Corps Base
Camp Lejeune, North Carolina

FOR THE

construction and operation of a No. 6 oil-fired boiler (#54) (maximum heat input of 24,200,000 BTU per hour) and for the operation of two No. 6 oil-fired boilers (17,800,000 BTU per hour heat input and 11,000,000 BTU per hour heat input respectively) and for the discharge of the associated stack gases at its facility located at Peach Street, Courthouse Bay, Camp Lejeune, North Carolina, Onslow County,

in accordance with the application received August 24, 1981, and in conformity with the plans, specifications, and other supporting data, all of which are filed with the Department of Natural Resources and Community Development and are incorporated as part of this Permit.

This Permit shall be effective from the date of its issuance until April 1, 1986, is nontransferable to future owners and operators, and shall be subject to the following specified conditions and limitations:

1. This permit shall become voidable unless the No. 6 oil-fired boiler (#54) is constructed in accordance with the approved plans, specifications, and other supporting data and placed in operation on or before October 16, 1981, or as this date may be amended.

2. The facilities shall be properly operated and maintained at all times in such a manner as to effect an overall reduction in air pollution in keeping with the application and otherwise to reduce air contamination to the extent necessary to comply with applicable Environmental Management Commission Regulations, including 15 NCAC 2D .0503, .0516, and .0521, and in no case shall the sulfur dioxide emissions from the boilers exceed 2.3 pounds per million BTU input.

3. Reports on the operation and maintenance of the facilities shall be submitted to the Division of Environmental Management at such intervals and in such form and detail as may be required by the Division. Information required in such reports may include, but is not limited to, process weight rates, firing rates, hours of operation, and preventive maintenance schedules.

4. Camp Lejeune Marine Base, at least ninety (90) days prior to the expiration of this Permit, shall request its extension by letter. The letter should include the permit number and a description of modifications, if any, that have been made.

5. This permit is subject to revocation or modification upon a determination that information contained in the application or presented in support thereof is incorrect, conditions under which the permit renewal was granted have changed, or violations of conditions contained in the permit have occurred.

6. A violation of any term or condition of this Permit shall subject the Permittee to enforcement procedures contained in North Carolina General Statutes 143-215.114, including assessment of civil penalties.

Permit issued this the 8th day of September, 1981.

NORTH CAROLINA ENVIRONMENTAL MANAGEMENT COMMISSION

Chr Wakild

Charles Wakild, Regional Supervisor
Division of Environmental Management
By Authority of the Environmental Management Commission

Permit No. 4641R

UNITED STATES MARINE CORPS
MARINE CORPS BASE
CAMP LEJEUNE, NORTH CAROLINA 28542

IN REPLY REFER TO

Wayne

MAIN/TH/jik
13700
19 Aug 1981

Mr. Charles Wakild
Regional Supervisor
Department of Natural Resources
and Community Development
Division of Environmental Management
7225 Wrightsville Avenue
Wilmington, NC 28403

Dear Mr. Wakild:

Permit No. 4641 was issued by your division for construction and operation of a No. 6 oil-fired boiler (#54) at the Courthouse Bay Steam Generating Plant, with the provision that the boiler be placed in operation on or before 1 September 1981, or as this date may be amended.

The contractor who is installing the boiler for the U.S. Marine Corps has experienced delays in the receipt of materials required to complete the boiler installation. Accordingly, the 1 September deadline for placing the boiler on line cannot be met. It is therefore requested that permit no. 4641 be amended to reflect an October 16, 1981 deadline for placing the boiler into operation.

If you have any further questions on this matter, please contact Mr. Danny Sharpe, Base Maintenance Division, telephone (919) 451-5003.

Sincerely,

K. P. Millice

K. P. MILLICE, Jr.
Colonel
Assistant Chief of Staff, Facilities
By direction of the Commanding General

JTW Copy

North Carolina Department of Natural Resources & Community Development

James B. Hunt, Jr., Governor

Howard N. Lee, Secretary

DIVISION OF ENVIRONMENTAL MANAGEMENT

May 22, 1981

Mr. D.B. Barker
Major General, U.S. Marine Corps
Commanding
Marine Corps Base
Camp Lejeune, North Carolina 28542

Subject: Permit No. 4644
Marine Corps Base
Camp Lejeune, North Carolina

Dear General Barker:

In accordance with your application received May 1, 1986, we are forwarding herewith Permit No. 4644 to Marine Corps Base, Camp Lejeune, North Carolina for the construction and/or operation of air pollution abatement facilities and/or emission sources.

If any parts, requirements, or limitations contained in this permit are unacceptable to you, you have the right to an adjudicatory hearing before a hearing officer upon written demand to the Director within thirty (30) days following receipt of this permit, identifying the specific issues to be contended. Unless such demand is made, this permit shall be final and binding.

This permit shall be effective from the date of issuance until April 1, 1986, is nontransferable to future owners and operators, and shall be subject to the conditions and limitations as specified therein.

Sincerely,

Charles Wakild

Charles Wakild
Regional Supervisor

Enclosure

cc: Stan Taylor
Robert Jamieson
Wilmington Regional Office
Central Files

NORTH CAROLINA

ENVIRONMENTAL MANAGEMENT COMMISSION

DEPARTMENT OF NATURAL RESOURCES & COMMUNITY DEVELOPMENT

Raleigh

P E R M I T

For the Discharge of Air Contaminants Into the Atmosphere

In accordance with the provisions of Article 21B of Chapter 143, General Statutes of North Carolina as amended, and other applicable Laws, Rules and Regulations,

PERMISSION IS HEREBY GRANTED TO

Marine Corps Base
Camp Lejeune, North Carolina

FOR THE

operation of three No. 6 oil-fired boilers (48.0 million BTU per hour heat input each) and for the discharge of the associated stack gases into the outdoor atmosphere at its facility located at the New River Air Station, Camp Lejeune, North Carolina, Onslow County,

in accordance with the application received May 1, 1981, and in conformity with the plans, specifications, and other supporting data, all of which are filed with the Department of Natural Resources & Community Development and are incorporated as part of this Permit.

This Permit shall be effective from the date of its issuance until April 1, 1986, is nontransferable to future owners and operators, and shall be subject to the following specified conditions and limitations:

1. The air cleaning devices shall be properly operated and maintained at all times in such a manner as to effect an overall reduction in air pollution in keeping with the application and otherwise to reduce air contamination to the extent necessary to comply with applicable Environmental Management Commission Regulations, including 15 NCAC 2D .0503, .0516, and .0521, and in no case shall the sulfur dioxide emissions from the boilers exceed 2.3 pounds per million BTU input.

2. Reports on the operation and maintenance of the facilities shall be submitted to the Division of Environmental Management at such intervals and in such form and detail as may be required by the Division. Information required in such reports may include, but is not limited to, process weight rates, firing rates, hours of operation, and preventive maintenance schedules.

3. Camp Lejeune Marine Base, at least ninety (90) days prior to the expiration of this Permit, shall request its extension by letter. The letter should include the permit number and a description of modifications, if any, that have been made.

4. This permit is subject to revocation or modification upon a determination that information contained in the application or presented in support thereof is uncorrect, conditions under which the permit renewal was granted have changed, or violations of conditions contained in the permit have occurred.

5. A violation of any term or condition of this Permit shall subject the Permittee to enforcement procedures contained in North Carolina General Statutes 143-215.114, including assessment of civil penalties.

Permit issued this the 22nd day of May

NORTH CAROLINA ENVIRONMENTAL MANAGEMENT COMMISSION

Charles Wakild

Charles Wakild, Regional Supervisor
Division of Environmental Management
By Authority of the Environmental Management Commission

BOILER #16

NORTH CAROLINA

ENVIRONMENTAL MANAGEMENT COMMISSION

RALEIGH

APPLICATION FOR

A "PERMIT"

TO CONSTRUCT AND OPERATE AIR

POLLUTION ABATEMENT FACILITIES AND/OR EMISSION SOURCES

Filed By: Major General D. B. Barker
(Name)

Marine Corps Base
(Address)

Camp Lejeune, North Carolina

AQ-22

ENCLOSURE (6)

APPLICATION INSTRUCTIONS

THIS APPLICATION IS SUBJECT TO REJECTION UNLESS ALL REQUIRED INFORMATION IS SUBMITTED

1. ATTACH DETAILED ENGINEERING DRAWINGS OF SOURCE(S), PROCESS(ES) AND COLLECTION DEVICE(S) AS REQUESTED IN EACH SECTION. IF MULTIPLE SOURCES OR DEVICES, USE ADDENDUM SHEETS AS NECESSARY.

2. Submit application, detailed engineering drawings, specifications and other supporting data and documents in TRIPLICATE.

3. Attach additional sheets as necessary to complete any portion of the application.

4. The application MUST BE SIGNED by the RESPONSIBLE INDIVIDUAL of the company that is to PURCHASE AND OPERATE the facilities for which a Permit is applied.

5. ALL APPLICANTS MUST COMPLETE THE FIRST PAGE AND SECTIONS I AND VI.

6. If an Incinerator, Fuel Burning Source, Wet Collection Device or Dry Collection Device is to be installed and operated, COMPLETE SECTIONS II, III, IV or V respectively.

7. All applications should be mailed to: ENVIRONMENTAL MANAGEMENT COMMISSION
AIR QUALITY SECTION
P. O. Box 27687
Raleigh, North Carolina 27611

APPLICATION FOR A "PERMIT"
To Construct and Operate Air Pollution Abatement Facilities and/or Emission Sources
Three Copies to be Submitted
Fourth Copy Should be Retained by Applicant

Date: 24 September 1980

In accordance with the provisions of Article 21 of Chapter 143, General Statutes of North Carolina as amended, application is hereby made by Marine Corps Base, Camp Lejeune, North Carolina
(Name of Company, Establishment, Town, Etc.) (Include Division or Plant Name in Addition to Parent Company if Applicable) in the County of Onslow at Jacksonville, North Carolina
(Street and City or Town Address of Plant or Facility)
for issuance of a "Permit" to construct and operate air pollution abatement facilities and/or emissions sources at above location as specified in the accompanying drawings, specifications, and other pertinent data:

1. Nature of Operation Conducted at the Above Facility: Military Operation

2. Description of Process(es) Whose Emission(s) is/are to be Controlled by the Facility or Source(s) Which is/are to be Constructed or Altered. (Complete Section I)
Boiler, No. 6 fuel oil Boiler No. 16
Bldg No. AS-4151

3. Furnish Type and Narrative Description of Proposed Control Device(s).(Complete Appropriate Supplemental Data Sheets for Control Device to be Installed and/or Operated. Include Make and Model Number of Control Device(s) and Number of Identical Units).
No. 6 oil fired, no control device.

4. Contaminant Emitted:	Weight Rate of Emissions (lb/hr): Without Control Device	With Control Device	Control Efficiency (%): Without Control Device	With Control Device
SO_x and Particulate	114.63 lb/hr	N/A	N/A	N/A

5. Name and Address of Engineering Firm that Prepared Plans:

6. Ultimate Disposition of Collected Pollutants:
None

7. Date on Which Facilities are to be Completed and in Operation:
October, 19 80

8. Indicate Period of Time for Which Facilities are Estimated to be Adequate: 20 Years

9. Estimate Cost of Air Pollution Control Device $ 0

10. Hours Facility is Operated Per Year: 8,760

Name: Major General D. B. Barker, USMC
(Responsible Individual of Company Purchasing/Operating Facility...PLEASE PRINT)

Mailing Address: Marine Corps Base
Camp Lejeune
North Carolina 28542

Signature and Title: DB Barker
D. B. BARKER, MAJOR GENERAL, USMC
Commanding General

Telephone Number: 451-5024

AQ-22

I. GENERAL DATA FOR PROCESSES

Attach detailed process engineering drawings, equipment drawings and flow diagrams for the process(es) or source(s) being constructed or altered.

Name of Process: Heating and Steam Plant

Total Weight of Materials Entering this Process: 327 gals~~XX~~/hr~~XXXXXXX~~

Volume and Temperature of Air Flow Entering Control Device: _____ CFM @ _____ °F

Volume and Temperature of Effluent at Discharge Point to Atmosphere: _____ CFM @ _____ °F

Pollutant(s) to be Controlled: _____

Height of Process Stack or Vent Above Ground Level 43 ft. Inside area of Stack 8.9 ft^2.

Particulate Emission Rate (Before Control) 8.044 lb/hr

Particle Size Distribution: 0-5μ____%, 5-10μ____%, 10-20μ____%, 20-30μ____%, 30-40μ____%, 40-50μ____%, >50μ____%

Gaseous Emission(s): Name (Chemical Formula)	μg/m³, PPM	or lb/hr
SO_x		106.59

II. SUPPLEMENTARY DATA FOR INCINERATORS (Including Conical Incinerators)

Circle Type of Waste or Indicate Composition: Type 0 Type I Type II Type III Type IV

Combustible: ____% Non-Combustible: ____% Moisture: ____% Heat Value: ____BTU/lb

Total Waste Generated Per Day: _____ lb. Hours Incinerator will be Operated: _____ hrs/day

Design Capacity for Above Waste: _____ lbs/hr Manufacturer and Model Number; Approximate Cost: _____

Primary Chamber Volume: _____ $ft.^3$ Secondary Chamber Volume: _____ $ft.^3$

Air Requirements: Total Excess Air ____% Draft: Natural ____ Induced ____ Other ____

Overfire Air: ____cfm Underfire Air: ____cfm

Is there an Electronically Controlled, Exhaust Gas Temperature Modulated, Damper Installed on the Conical Incinerator for: Overfire Air Supply____, Underfire Air Supply____, Dome____Temperature Set Point____°F

Flame Port Temperature: _____ °F Secondary Chamber Temperature: _____ °F

Is there a Continuous Exhaust Gas Temperature Recorder? Yes____ No____

Stack:
Inside Area ____$ft.^2$ Height ____ft. Gas Velocity ____ft/sec Temperature ____°F Fan Capacity ____cfm Stack Lined? _____

Is there a Wet Scrubber?

Yes ____ No ____ Flow Rate of H_2O into Scrubber ____gal/min Temperature Before Scrubber ____°F

Aux. Fuel: Oil _____ Gas _____ Other _____ Burner Rating: Primary Chamber _____BTU/hr Secondary Chamber _____BTU/hr Stack _____BTU/hr

Primary Burner: Is there a Preheat Timer? Yes ____ No ____ Preheating Time: _____min.

Secondary Burner or Afterburner: Is there a Timer? Yes ____ No ____ Length of Time Burner is Operated _____min.

Is the Timer Reset by Charging Door? Yes ____ No ____ Other Mode of Burner Control _____

Type of Feed: Manual _____ Automatic _____ If Automatic, Describe _____

Distance from Incinerator to Nearest Structure(s) in which People Live and/or Work.____ft.

Signature: _____ Title: _____

Attach detailed dimensioned drawing or sketch showing internal features of gasifiers, wood or coal fired boilers, and recovery boilers.

Type of Fuel Burning Source Boiler Stack Height Above Ground Level 43 ft. Inside Area of Stack 8.9 ft^2

Make and Model Number Trane Murray Company Ser. 10735 Volume of Furnace ____ ft^3

Specify Actual Amount of Each Fuel Used in Above Source (s):

Coal ____ lb/hr; Oil Grade 6 Amount 327 gal/hr, at 146,900 BTU/gal and ____ lb/gal or ____ lb/hr

Wood ____ lb/hr; Natural Gas ____ SCF/hr, at ____ BTU/SCF; Other ____

(Specify type, amount and heating value)

Specify Maximum Rating for Each Fuel Burning Source:

Coal ____ Oil 327 Wood ____ Natural Gas ____ Other ____

Maximum Sulfur Content of Fuel 2.05 % Specify Standby Fuel None Maximum % Sulfur ____

Type of Solid Fuel Burning Equipment Used: Hand Fired ___ Spreader Stoker ___ Underfeed Stoker ___ Chain Grate ___

Traveling Grate ___ Pulverizer ___ Cyclone Furnace ___ Other (Specify) ____

Ash Content of Fuel: Specify Method and Schedule of Tube Cleaning, if Applicable:

Coal ____ % Wood ____ % Other ____ % Lancing ____ Tube Blowing ____ Schedule ____

Emission Control Equipment (Describe in Detail in Sections IV and V)

Collection Device: Wet ___ Dry ___ Steam Injection ___ Air Injection ___ Is Collected Flyash Reinjected? ___

Draft on Boiler (Natural ____ Induced X) ____ cfm at ____ °F

Total Number of Fuel Burning Sources Within Property Boundaries: 3

Maximum Capacity Rating, by Type, for All Fuel Burning Units Excluding that Itemized Above: (Total Like Units) 2

Coal ____ lb/hr Wood ____ lb/hr Oil 654 gal/hr Natural Gas ____ SCF/hr

IV. SUPPLEMENTARY DATA FOR WET COLLECTION DEVICES

Attach detailed engineering drawings of the control device and particle size versus removal efficiency curves.

Liquid Scrubbing Medium and Additives: ____

Total Liquid Injection Rate (Include Recirculated and Make-up Rates) ____ gal/min or gal/1000 ft^3

Operating Pressure Drop Across Device ____ in H_2O

ANSWER FOLLOWING QUESTIONS FOR SPECIFIC DEVICE:

VENTURI SCRUBBER: Inlet Area ____ in^2 Throat Area ____ in^2 Throat Velocity ____ ft/sec

GRAVITY SPRAY CHAMBER: Number of Nozzles ____ Liquid Droplet Size ____ u Co-Current ____ Countercurrent ____

WET CYCLONE:

Body Diameter ____ in Length ____ in

Inlet Area ____ in^2 Number of Nozzles ____

Outlet Area ____ in^2

PACKED TOWER OR PLATE TOWER:

Cross-Sectional Area ____ ft^2 Type of Plate ____

Length ____ ft Depth of Packing ____ ft

Number of Plates ____ Type of Packing ____

OTHER WET COLLECTION DEVICES: GIVE COMPLETE DESCRIPTION INCLUDING DESIGN PARAMETERS AND DETAILED ENGINEERING DRAWINGS.

Signature: ____ Title: ____

V. SUPPLEMENTARY DATA FOR DRY COLLECTION DEVICES

Attach detailed engineering drawings of the control device and particle size versus removal efficiency curves.

BAGHOUSES: Cloth Area _____ ft^2

Bag Material _____

Number of Compartments _____

Pressure - Drop Total _____ in H_2O

Method of Cleaning _____

Air-to-Cloth Ratio _____ ft/min

Time Between Cleaning _____ mins, hrs

ELECTROSTATIC PRECIPITATORS:

GENERAL:

Effective Area of Grounded Collector Plates _____ ft^2

Number of Compartments or Chambers _____ Number of Cells per Compartment _____

Electrical Field Gradient at the Discharge or Emitting Electrodes _____ KV/in

Average Electrical Field Gradient at the the Grounded Collecting Electrodes _____ KV/in

Fields of Treatment _____ Potential Applied to Emitting Wires _____ KV

SINGLE STAGE TYPE:

Distance Between Emitting Wires and Collecting Plates _____ in.

Number of Isolatable Bus Sections _____ Corona Power _____ Watts/1000 cfm

TWO STAGE TYPE:

Distance Between First Stage Emitting Electrodes and Field Receiver Electrodes (Ground) _____ in

Potential Applied to Second Stage Emitting Plates _____ KV

Distance Between Second Stage Emitting Plates and Grounded Collection Plates _____ in

CYCLONES/MULTICYCLONES:

Simple Cyclone

Diameter _____ in

Inlet Dimensions _____

Outlet Dimensions _____

Pressure Drop _____ in H_2O

Number of Cyclones _____

Multicyclone

Diameter _____ in

Inlet Dimensions of Individual Cyclone _____

Outlet Dimensions of Individual Cyclone _____

Pressure Drop _____ in H_2O

Number of Cyclones _____

OTHER DRY COLLECTION DEVICES: GIVE COMPLETE DETAILED ENGINEERING DESCRIPTION AND DRAWINGS.

Signature: _____

Title: _____

Boiler 16

VI. AREA DIAGRAM

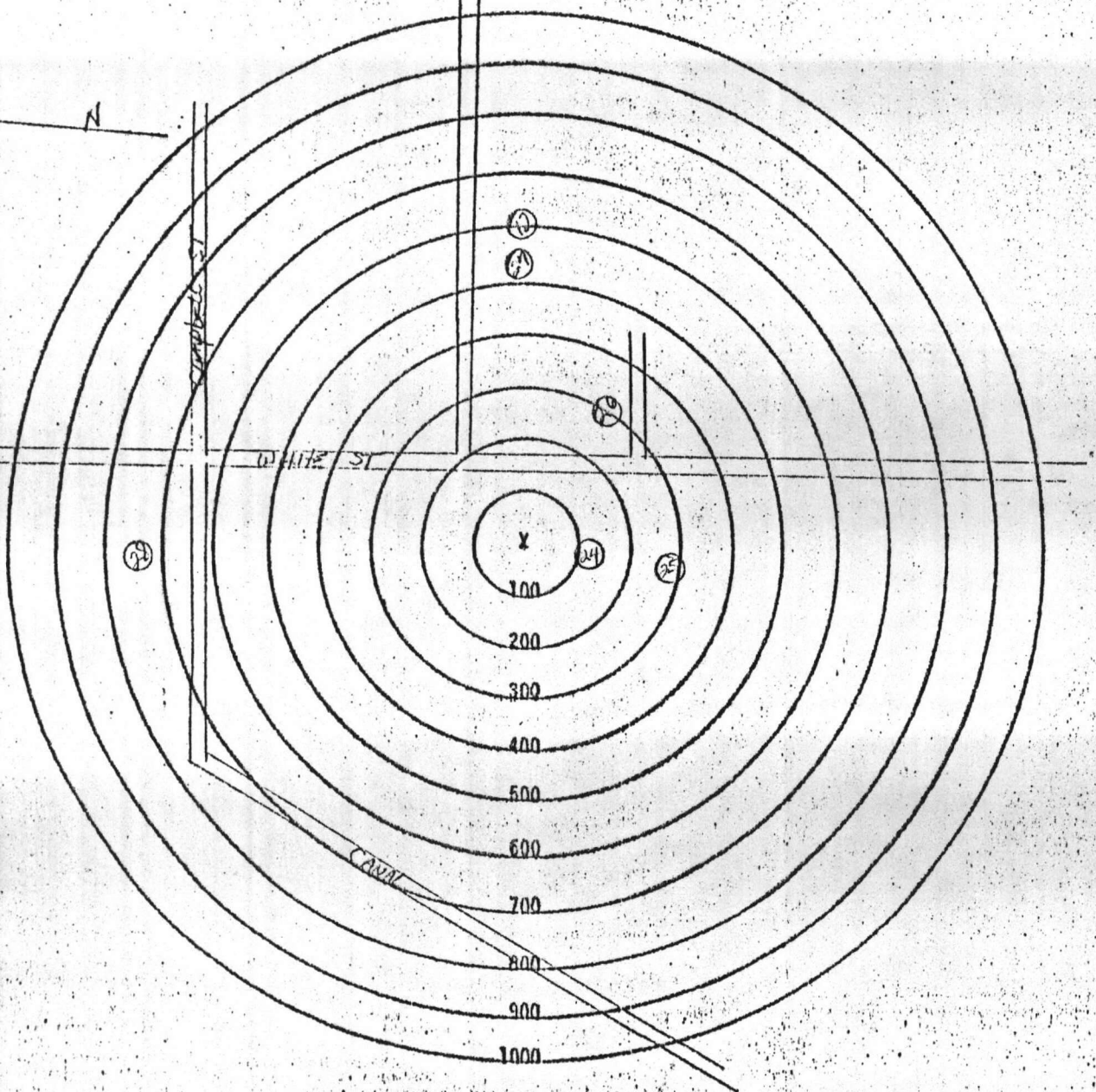

Owner Marine Corps Base, Camp Lejeune, N.C.

Location White St., New River Air Station
(Give Street Address)

INSTRUCTIONS:

1. Show all surrounding buildings and roads within 1000 feet of subject equipment which is located at center of circles.
2. Indicate location and type of building by the use of small numbered circles with the description below.
3. Show roads as lines representing the road edges. Indicate street names and highway numbers.
4. Show wooded or cleared areas by approximate boundary lines and the words "woods", "cleared", "cornfield", etc.
5. Indicate diraction of north by arrow.

CODE	DESCRIPTION
1	12 Sewage Lift Station
2	24 Shed
3	25 Avionics Shop
4	26 Engine Test Shop
5	27 Maintenance Hanger
6	28 Fuel Tanks
7	
8	
9	
10	

EXAMPLE 1 Church
2 Residence

X Indicates location of equipment.

BOILER # 1

NORTH CAROLINA

ENVIRONMENTAL MANAGEMENT COMMISSION

RALEIGH

RECEIVED
NOV
WILMINGTON REGIONAL OFFICE
DEM

APPLICATION FOR

A "PERMIT"

TO CONSTRUCT AND OPERATE AIR

POLLUTION ABATEMENT FACILITIES AND/OR EMISSION SOURCES

Filed By: Major General D. B. Barker
(Name)

Marine Corps Base
(Address)

Camp Lejeune, North Carolina

AQ-22

APPLICATION INSTRUCTIONS

THIS APPLICATION IS SUBJECT TO REJECTION UNLESS ALL REQUIRED

INFORMATION IS SUBMITTED

1. ATTACH DETAILED ENGINEERING DRAWINGS OF SOURCE(S), PROCESS(ES) AND COLLECTION DEVICE(S) AS REQUESTED IN EACH SECTION. IF MULTIPLE SOURCES OR DEVICES, USE ADDENDUM SHEETS AS NECESSARY.

2. Submit application, detailed engineering drawings, specifications and other supporting data and documents in TRIPLICATE.

3. Attach additional sheets as necessary to complete any portion of the application.

4. The application MUST BE SIGNED by the RESPONSIBLE INDIVIDUAL of the company that is to PURCHASE AND OPERATE the facilities for which a Permit is applied.

5. ALL APPLICANTS MUST COMPLETE THE FIRST PAGE AND SECTIONS I AND VI.

6. If an Incinerator, Fuel Burning Source, Wet Collection Device or Dry Collection Device is to be installed and operated, COMPLETE SECTIONS II, III, IV or V respectively.

7. All applications should be mailed to: ENVIRONMENTAL MANAGEMENT COMMISSION
AIR QUALITY SECTION
P. O. Box 27687
Raleigh, North Carolina 27611

APPLICATION FOR A "PERMIT"
To Construct and Operate Air Pollution Abatement Facilities and/or Emission Sources
Three Copies to be Submitted
Fourth Copy Should be Retained by Applicant

Date: 24 September 1980

In accordance with the provisions of Article 21 of Chapter 143, General Statutes of North Carolina as amended, application is hereby made by Marine Corps Base, Camp Lejeune, North Carolina (Name of Company, Establishment, Town, Etc.) (Include Division or Plant Name in Addition to Parent Company if Applicable) in the County of Onslow at Jacksonville, North Carolina (Street and City or Town Address of Plant or Facility) for issuance of a "Permit" to construct and operate air pollution abatement facilities and/or emissions sources at above location as specified in the accompanying drawings, specifications, and other pertinent data:

1. Nature of Operation Conducted at the Above Facility: Military Operation

2. Description of Process(es) Whose Emission(s) is/are to be Controlled by the Facility or Source(s) Which is/are to be Constructed or Altered. (Complete Section I)

Boiler, No. 6 Fuel Oil Boiler No. 17
Bldg No. AS-4151

3. Furnish Type and Narrative Description of Proposed Control Device(s).(Complete Appropriate Supplemental Data Sheets for Control Device to be Installed and/or Operated. Include Make and Model Number of Control Device(s) and Number of Identical Units).

No. 6 oil fired; no control device.

4.

Contaminant Emitted:	Weight Rate of Emissions (lb/hr): Without Control Device	With Control Device	Control Efficiency (%): Without Control Device	With Control Device
SO_x and Particulate	114.63	N/A	N/A	N/A

5. Name and Address of Engineering Firm that Prepared Plans:

6. Ultimate Disposition of Collected Pollutants: None

7. Date on Which Facilities are to be Completed and in Operation: October, 19 80

8. Indicate Period of Time for Which Facilities are Estimated to be Adequate: 20 Years

9. Estimate Cost of Air Pollution Control Device $ 0

10. Hours Facility is Operated Per Year: 8,760

Name: Major General D. B. Barker, USMC
(Responsible Individual of Company Purchasing/Operating Facility...PLEASE PRINT)

Mailing Address: Marine Corps Base
Camp Lejeune
North Carolina 28542

Signature and Title: DB Barker
D. B. BARKER, MAJOR GENERAL, USMC
Commanding General

Telephone Number: 451-5024

AQ-22

I. GENERAL DATA FOR PROCESSES

Attach detailed process engineering drawings, equipment drawings and flow diagrams for the process(es) or source(s) being constructed or altered.

Name of Process: Heating and Steam Plant

Total Weight of Materials Entering this Process: 327 gals ~~lb~~/hr or ton/hr

Volume and Temperature of Air Flow Entering Control Device: _____ CFM @ _____ °F

Volume and Temperature of Effluent at Discharge Point to Atmosphere: _____ CFM @ _____ °F

Pollutant(s) to be Controlled: _____

Height of Process Stack or Vent Above Ground Level 43 ft. Inside area of Stack 8.9 ft^2.

Particulate Emission Rate (Before Control) 8.044 lb/hr

Particle Size Distribution: 0-5μ____%, 5-10μ____%, 10-20μ____%, 20-30μ____%, 30-40μ____%, 40-50μ____%, >50μ____%

Gaseous Emission(s): Name (Chemical Formula)	μg/m^3, PPM	or lb/hr
SO_x		106.59

II. SUPPLEMENTARY DATA FOR INCINERATORS (Including Conical Incinerators)

Circle Type of Waste or Indicate Composition: Type 0 Type I Type II Type III Type IV

Combustible: ____% Non-Combustible: ____% Moisture: ____% Heat Value: ____BTU/lb

Total Waste Generated Per Day: _____ lb. Hours Incinerator will be Operated: _____ hrs/day

Design Capacity for Above Waste: _____ lbs/hr Manufacturer and Model Number; Approximate Cost: _____

Primary Chamber Volume: _____ $ft.^3$ Secondary Chamber Volume: _____ $ft.^3$

Air Requirements: Total Excess Air ____% Draft: Natural ____ Induced ____ Other ____

Overfire Air: ____cfm Underfire Air: ____cfm

Is there an Electronically Controlled, Exhaust Gas Temperature Modulated, Damper Installed on the Conical Incinerator for: Overfire Air Supply____, Underfire Air Supply____, Dome____ Temperature Set Point____°F

Flame Port Temperature: _____ °F Secondary Chamber Temperature: _____ °F

Is there a Continuous Exhaust Gas Temperature Recorder? Yes____ No____

Stack:
Inside Area ____$ft.^2$ Height ____ft. Gas Velocity ____ft/sec Temperature ____°F Fan Capacity ____cfm Stack Lined? _____

Is there a Wet Scrubber?

Yes ____ No ____ Flow Rate of H_2O into Scrubber ____gal/min Temperature Before Scrubber ____°F

Aux. Fuel: Oil _____ Gas _____ Other _____ Burner Rating: Primary Chamber _____BTU/hr Secondary Chamber _____BTU/hr Stack _____BTU/hr

Primary Burner: Is there a Preheat Timer? Yes ____ No ____ Preheating Time: _____min.

Secondary Burner or Afterburner: Is there a Timer? Yes ____ No ____ Length of Time Burner is Operated _____min.

Is the Timer Reset by Charging Door? Yes ____ No ____ Other Mode of Burner Control _____

Type of Feed: Manual _____ Automatic _____ If Automatic, Describe _____

Distance from Incinerator to Nearest Structure(s) in which People Live and/or Work.____ft.

Signature: _____ Title: _____

SUPPLEMENTARY DATA FOR FUEL BURNING SOURCES

Attach detailed dimensioned drawing or sketch showing internal features of incinerators, wood or coal fired boilers, and recovery boilers.

Type of Fuel Burning Source Boiler Stack Height Above Ground Level 43 ft. Inside Area of Stack 8.9 ft^2

Make and Model Number Trane Murray Co. Ser. 10735 Volume of Furnace ____ ft^3

Specify Actual Amount of Each Fuel Used in Above Source (s):

Coal ____ lb/hr; Oil Grade 6 Amount 327 gal/hr, at 146,900 BTU/gal and ____ lb/gal or ____ lb/hr

Wood ____ lb/hr; Natural Gas ____ SCF/hr, at ____ BTU/SCF; Other ____

(Specify type, amount and heating value)

Specify Maximum Rating for Each Fuel Burning Source:

Coal ____ Oil 327 Wood ____ Natural Gas ____ Other ____

Maximum Sulfur Content of Fuel 2.05 % Specify Standby Fuel None Maximum % Sulfur ____

Type of Solid Fuel Burning Equipment Used: Hand Fired ___ Spreader Stoker ___ Underfeed Stoker ___ Chain Grate ___

Traveling Grate ___ Pulverizer ___ Cyclone Furnace ___ Other (Specify) ____

Ash Content of Fuel: Specify Method and Schedule of Tube Cleaning, if Applicable:

Coal ____ % Wood ____ % Other ____ % Lancing ____ Tube Blowing ____ Schedule ____

Emission Control Equipment (Describe in Detail in Sections IV and V)

Collection Device: Wet ___ Dry ___ Steam Injection ___ Air Injection ___ Is Collected Flyash Reinjected? ___

Draft on Boiler (Natural ____ Induced X) ____ cfm at ____ °F

Total Number of Fuel Burning Sources Within Property Boundaries: 3

Maximum Capacity Rating, by Type, for All Fuel Burning Units Excluding that Itemized Above: (Total Like Units) 2

Coal ____ lb/hr Wood ____ lb/hr Oil 654 gal/hr Natural Gas ____ SCF/hr

IV. SUPPLEMENTARY DATA FOR WET COLLECTION DEVICES

Attach detailed engineering drawings of the control device and particle size versus removal efficiency curves.

Liquid Scrubbing Medium and Additives: ____

Total Liquid-Injection Rate (Include Recirculated and Make-up Rates) ____ gal/min or gal/1000 ft^3

Operating Pressure Drop Across Device ____ in H_2O

ANSWER FOLLOWING QUESTIONS FOR SPECIFIC DEVICE:

VENTURI SCRUBBER: Inlet Area ____ in^2 Throat Area ____ in^2 Throat Velocity ____ ft/sec

GRAVITY SPRAY CHAMBER: Number of Nozzles ____ Liquid Droplet Size ____ u Co-Current ____ Countercurrent ____

WET CYCLONE:

Body Diameter ____ in Length ____ in

Inlet Area ____ in^2 Number of Nozzles ____

Outlet Area ____ in^2

PACKED TOWER OR PLATE TOWER:

Cross-Sectional Area ____ ft^2 Type of Plate ____

Length ____ ft Depth of Packing ____ ft

Number of Plates ____ Type of Packing ____

OTHER WET COLLECTION DEVICES: GIVE COMPLETE DESCRIPTION INCLUDING DESIGN PARAMETERS AND DETAILED ENGINEERING DRAWINGS.

Signature: ____ Title: ____

V. SUPPLEMENTARY DATA FOR DRY COLLECTION DEVICES

Attach detailed engineering drawings of the control device and particle size versus removal efficiency curves.

BAGHOUSES: Cloth Area _____ ft^2

Number of Compartments _____

Method of Cleaning _____

Time Between Cleaning _____ mins, hrs

Bag Material _____

Pressure - Drop Total _____ in H_2O

Air-to-Cloth Ratio _____ ft/min

ELECTROSTATIC PRECIPITATORS:

GENERAL:

Effective Area of Grounded Collector Plates _____ ft^2

Number of Compartments or Chambers _____ Number of Cells per Compartment _____

Electrical Field Gradient at the Discharge or Emitting Electrodes _____ KV/in

Average Electrical Field Gradient at the the Grounded Collecting Electrodes _____ KV/in

Fields of Treatment _____ Potential Applied to Emitting Wires _____ KV

SINGLE STAGE TYPE:

Distance Between Emitting Wires and Collecting Plates _____ in.

Number of Isolatable Bus Sections _____ Corona Power _____ Watts/1000 cfm

TWO STAGE TYPE:

Distance Between First Stage Emitting Electrodes and Field Receiver Electrodes (Ground) _____ in

Potential Applied to Second Stage Emitting Plates _____ KV

Distance Between Second Stage Emitting Plates and Grounded Collection Plates _____ in

CYCLONES/MULTICYCLONES:

Simple Cyclone

Diameter _____ in

Inlet Dimensions _____

Outlet Dimensions _____

Pressure Drop _____ in H_2O

Number of Cyclones _____

Multicyclone

Diameter _____ in

Inlet Dimensions of Individual Cyclone _____

Outlet Dimensions of Individual Cyclone _____

Pressure Drop _____ in H_2O

Number of Cyclones _____

OTHER DRY COLLECTION DEVICES: GIVE COMPLETE DETAILED ENGINEERING DESCRIPTION AND DRAWINGS.

Signature: _____ Title: _____

Boiler 17

VI. AREA DIAGRAM

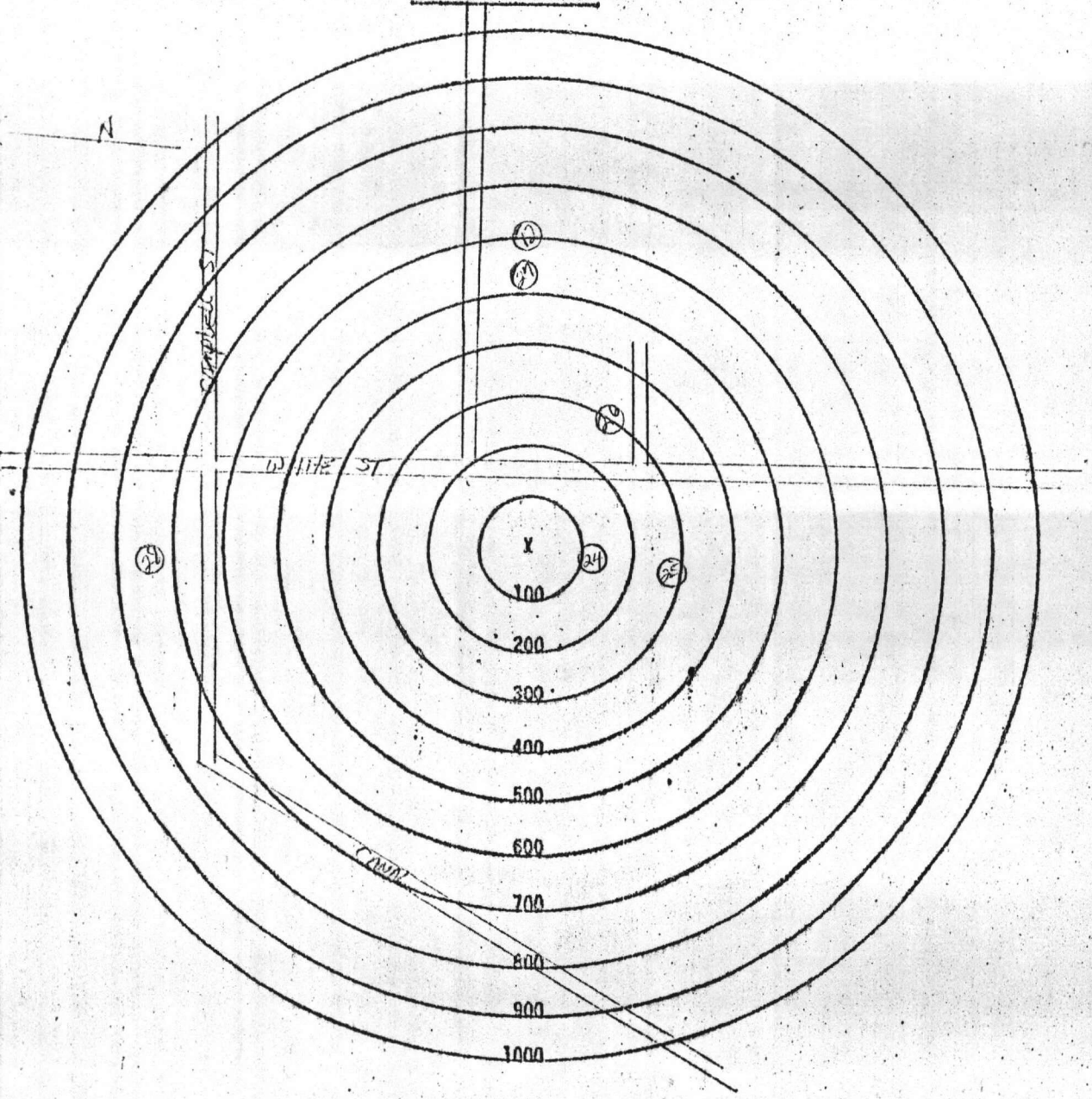

Owner Marine Corps Base, Camp Lejeune, N.C.

Location White St., New River Air Station
(Give Street Address)

INSTRUCTIONS:

1. Show all surrounding buildings and roads within 1000 feet of subject equipment which is located at center of circles.
2. Indicate location and type of building by the use of small numbered circles with the description below.
3. Show roads as lines representing the road edges. Indicate street names and highway numbers.
4. Show wooded or cleared areas by approximate boundary lines and the words "woods", "cleared", "cornfield", etc.
5. Indicate direction of north by arrow.

CODE	DESCRIPTION
1	12 Sewage Lift Station
2	24 Shed
3	25 Avionics Shop
4	26 Engine Test Shop
5	27 Maintenance Hanger
6	28 Fuel Tanks
7	
8	
9	
10	

EXAMPLE
1. Church
2. Residence

X Indicates location of equipment.

BOILER #18

NORTH CAROLINA

ENVIRONMENTAL MANAGEMENT COMMISSION

RALEIGH

APPLICATION FOR

A "PERMIT"

TO CONSTRUCT AND OPERATE AIR

POLLUTION ABATEMENT FACILITIES AND/OR EMISSION SOURCES

Filed By: Major General D. B. Barker
(Name)

Marine Corps Base
(Address)

Camp Lejeune, North Carolina

AQ-22

APPLICATION INSTRUCTIONS

THIS APPLICATION IS SUBJECT TO REJECTION UNLESS ALL REQUIRED INFORMATION IS SUBMITTED

1. ATTACH DETAILED ENGINEERING DRAWINGS OF SOURCE(S), PROCESS(ES) AND COLLECTION DEVICE(S) AS REQUESTED IN EACH SECTION. IF MULTIPLE SOURCES OR DEVICES, USE ADDENDUM SHEETS AS NECESSARY.

2. Submit application, detailed engineering drawings, specifications and other supporting data and documents in TRIPLICATE.

3. Attach additional sheets as necessary to complete any portion of the application.

4. The application MUST BE SIGNED by the RESPONSIBLE INDIVIDUAL of the company that is to PURCHASE AND OPERATE the facilities for which a Permit is applied.

5. ALL APPLICANTS MUST COMPLETE THE FIRST PAGE AND SECTIONS I AND VI.

6. If an Incinerator, Fuel Burning Source, Wet Collection Device or Dry Collection Device is to be installed and operated, COMPLETE SECTIONS II, III, IV or V respectively.

7. All applications should be mailed to: ENVIRONMENTAL MANAGEMENT COMMISSION
AIR QUALITY SECTION
P. O. Box 27687
Raleigh, North Carolina 27611

APPLICATION FOR A "PERMIT"
To Construct and Operate Air Pollution Abatement Facilities and/or Emission Sources
Three Copies to be Submitted
Fourth Copy Should be Retained by Applicant

Date: 24 September 1980

In accordance with the provisions of Article 21 of Chapter 143, General Statutes of North Carolina as amended, application is hereby made by Marine Corps Base, Camp Lejeune, North Carolina
(Name of Company, Establishment, Town, Etc.) (Include Division or Plant Name in Addition to Parent Company if Applicable) in the County of Onslow at Jacksonville, North Carolina
(Street and City or Town Address of Plant or Facility)
for issuance of a "Permit" to construct and operate air pollution abatement facilities and/or emissions sources at above location as specified in the accompanying drawings, specifications, and other pertinent data:

1. Nature of Operation Conducted at the Above Facility: Military Operation

2. Description of Process(es) Whose Emission(s) is/are to be Controlled by the Facility or Source(s) Which is/are to be Constructed or Altered. (Complete Section I)
Boiler, No. 6 Fuel Oil — Boiler No. 18, Bldg No. AS-4151

3. Furnish Type and Narrative Description of Proposed Control Device(s).(Complete Appropriate Supplemental Data Sheets for Control Device to be Installed and/or Operated. Include Make and Model Number of Control Device(s) and Number of Identical Units).
No. 6 oil fired, No control device.

4.

Contaminant Emitted:	Weight Rate of Emissions (lb/hr): Without Control Device	Weight Rate of Emissions (lb/hr): With Control Device	Control Efficiency (%): Without Control Device	Control Efficiency (%): With Control Device
SO_x and Particultes	114.63 lb/hr	N/A	N/A	N/A

5. Name and Address of Engineering Firm that Prepared Plans:

6. Ultimate Disposition of Collected Pollutants: None

7. Date on Which Facilities are to be Completed and in Operation: October, 19 80

8. Indicate Period of Time for Which Facilities are Estimated to be Adequate: 20 Years

9. Estimate Cost of Air Pollution Control Device $ 0

10. Hours Facility is Operated Per Year: 8,760

Name: Major General D. B. Barker, USMC
(Responsible Individual of Company Purchasing/Operating Facility...PLEASE PRINT)

Mailing Address: Marine Corps Base
Camp Lejeune
North Carolina 28542

Signature and Title: DB Barker
D. B. BARKER, MAJOR GENERAL, USMC
Commanding General

Telephone Number: 451-5024

AQ-22

I. GENERAL DATA FOR PROCESSES

*Attach detailed process engineering drawings, equipment drawings and flow diagrams for the process(es) or source(s) being constructed or altered.

Name of Process: Heating and Steam Plant

Total Weight of Materials Entering this Process: 327 gals/hr

Volume and Temperature of Air Flow Entering Control Device: _____ CFM @ _____ °F

Volume and Temperature of Effluent at Discharge Point to Atmosphere: _____ CFM @ _____ °F

Pollutant(s) to be Controlled: _____

Height of Process Stack or Vent Above Ground Level 43 ft. Inside area of Stack 8.9 ft^2.

Particulate Emission Rate (Before Control) 8.044 lb/hr

Particle Size Distribution: 0-5μ____%, 5-10μ____%, 10-20μ____%, 20-30μ____%, 30-40μ____%, 40-50μ____%, >50μ____%

Gaseous Emission(s): Name (Chemical Formula)	$\mu g/m^3$, PPM	or lb/hr
SO_x		106.59

II. SUPPLEMENTARY DATA FOR INCINERATORS (Including Conical Incinerators)

Circle Type of Waste or Indicate Composition: Type 0 Type I Type II Type III Type IV

Combustible: ____% Non-Combustible: ____% Moisture: ____% Heat Value: ____BTU/lb

Total Waste Generated Per Day: _____ lb. Hours Incinerator will be Operated: _____ hrs/day

Design Capacity for Above Waste: _____ lbs/hr Manufacturer and Model Number; Approximate Cost: _____

Primary Chamber Volume: _____ $ft.^3$ Secondary Chamber Volume: _____ $ft.^3$

Air Requirements: Total Excess Air ____% Draft: Natural ____ Induced ____ Other ____

Overfire Air: ____cfm Underfire Air: ____cfm

Is there an Electronically Controlled, Exhaust Gas Temperature Modulated, Damper Installed on the Conical Incinerator for: Overfire Air Supply____, Underfire Air Supply____, Dome____ Temperature Set Point____°F

Flame Port Temperature: _____ °F Secondary Chamber Temperature: _____ °F

Is there a Continuous Exhaust Gas Temperature Recorder? Yes____ No____

Stack: Inside Area ____$ft.^2$ Height ____ft. Gas Velocity ____ft/sec Temperature ____°F Fan Capacity ____cfm Stack Lined? _____

Is there a Wet Scrubber?

Yes ____ No ____ Flow Rate of H_2O into Scrubber ____gal/min Temperature Before Scrubber ____°F

Aux. Fuel: Oil _____ Gas _____ Other _____ Burner Rating: Primary Chamber _____BTU/hr Secondary Chamber _____BTU/hr Stack _____BTU/hr

Primary Burner: Is there a Preheat Timer? Yes ____ No ____ Preheating Time: _____min.

Secondary Burner or Afterburner: Is there a Timer? Yes ____ No ____ Length of Time Burner is Operated _____min.

Is the Timer Reset by Charging Door? Yes ____ No ____ Other Mode of Burner Control _____

Type of Feed: Manual _____ Automatic _____ If Automatic, Describe _____

Distance from Incinerator to Nearest Structure(s) in which People Live and/or Work. _____ft.

Signature: _____ Title: _____

III. SUPPLEMENTARY DATA FOR FUEL BURNING SOURCES

Attach detailed dimensioned drawing or sketch showing internal features of dryers, wood or coal fired boilers, and recovery boilers.

Type of Fuel Burning Source Boiler Stack Height Above Ground Level 43 ft. Inside Area of Stack 8.9 ft^2

Make and Model Number Trane Murray Company Ser 10736 Volume of Furnace ____ ft^3

Specify Actual Amount of Each Fuel Used in Above Source (s):

Coal ____ lb/hr; Oil Grade 6 Amount 327 gal/hr, at 146,900 BTU/gal and ____ lb/gal or ____ lb/hr

Wood ____ lb/hr; Natural Gas ____ SCF/hr, at ____ BTU/SCF; Other ____

(Specify type, amount and heating value)

Specify Maximum Rating for Each Fuel Burning Source:

Coal ____ Oil 327 Wood ____ Natural Gas ____ Other ____

Maximum Sulfur Content of Fuel 2.05% Specify Standby Fuel None Maximum % Sulfur ____

Type of Solid Fuel Burning Equipment Used: Hand Fired ___ Spreader Stoker ___ Underfeed Stoker ___ Chain Grate ___

Traveling Grate ___ Pulverizer ___ Cyclone Furnace ___ Other (Specify) ____

Ash Content of Fuel: Specify Method and Schedule of Tube Cleaning, if Applicable:

Coal ____ % Wood ____ % Other ____ % Lancing ____ Tube Blowing ____ Schedule ____

Emission Control Equipment (Describe in Detail in Sections IV and V)

Collection Device: Wet ___ Dry ___ Steam Injection ___ Air Injection ___ Is Collected Flyash Reinjected? ___

Draft on Boiler (Natural ____ Induced X) ____ cfm at ____ °F

Total Number of Fuel Burning Sources Within Property Boundaries: 3

Maximum Capacity Rating, by Type, for All Fuel Burning Units Excluding that Itemized Above: (Total Like Units) 2

Coal ___ lb/hr Wood ___ lb/hr Oil 654 gal/hr Natural Gas ___ SCF/hr

IV. SUPPLEMENTARY DATA FOR WET COLLECTION DEVICES

Attach detailed engineering drawings of the control device and particle size versus removal efficiency curves.

Liquid Scrubbing Medium and Additives: ____

Total Liquid-Injection Rate (Include Recirculated and Make-up Rates) ____ gal/min or gal/1000 ft^3

Operating Pressure Drop Across Device ____ in H_2O

ANSWER FOLLOWING QUESTIONS FOR SPECIFIC DEVICE:

VENTURI SCRUBBER: Inlet Area ___ in^2 Throat Area ___ in^2 Throat Velocity ___ ft/sec

GRAVITY SPRAY CHAMBER: Number of Nozzles ___ Liquid Droplet Size ___ u Co-Current ___ Countercurrent ___

WET CYCLONE:

Body Diameter ___ in Length ____ in

Inlet Area ____ in^2 Number of Nozzles ____

Outlet Area ____ in^2

PACKED TOWER OR PLATE TOWER:

Cross-Sectional Area ____ ft^2 Type of Plate ____

Length ____ ft Depth of Packing ____ ft

Number of Plates ____ Type of Packing ____

OTHER WET COLLECTION DEVICES: GIVE COMPLETE DESCRIPTION INCLUDING DESIGN PARAMETERS AND DETAILED ENGINEERING DRAWINGS.

Signature: ____ Title: ____

V. SUPPLEMENTARY DATA FOR DRY COLLECTION DEVICES

Attach detailed engineering drawings of the control device and particle size versus removal efficiency curves.

BAGHOUSES: Cloth Area _____ ft^2

Bag Material _____

Number of Compartments _____

Pressure - Drop Total _____ in H_2O

Method of Cleaning _____

Air-to-Cloth Ratio _____ ft/min

Time Between Cleaning _____ mins, hrs

ELECTROSTATIC PRECIPITATORS:

GENERAL:

Effective Area of Grounded Collector Plates _____ ft^2

Number of Compartments or Chambers _____ Number of Cells per Compartment _____

Electrical Field Gradient at the Discharge or Emitting Electrodes _____ KV/in

Average Electrical Field Gradient at the the Grounded Collecting Electrodes _____ KV/in

Fields of Treatment _____ Potential Applied to Emitting Wires _____ KV

SINGLE STAGE TYPE:

Distance Between Emitting Wires and Collecting Plates _____ in.

Number of Isolatable Bus Sections _____ Corona Power _____ Watts/1000 cfm

TWO STAGE TYPE:

Distance Between First Stage Emitting Electrodes and Field Receiver Electrodes (Ground) _____ in

Potential Applied to Second Stage Emitting Plates _____ KV

Distance Between Second Stage Emitting Plates and Grounded Collection Plates _____ in

CYCLONES/MULTICYCLONES:

Simple Cyclone

Diameter _____ in

Inlet Dimensions _____

Outlet Dimensions _____

Pressure Drop _____ in H_2O

Number of Cyclones _____

Multicyclone

Diameter _____ in

Inlet Dimensions of Individual Cyclone _____

Outlet Dimensions of Individual Cyclone _____

Pressure Drop _____ in H_2O

Number of Cyclones _____

OTHER DRY COLLECTION DEVICES: GIVE COMPLETE DETAILED ENGINEERING DESCRIPTION AND DRAWINGS.

Signature: _____ Title: _____

Boiler 18

VI. AREA DIAGRAM

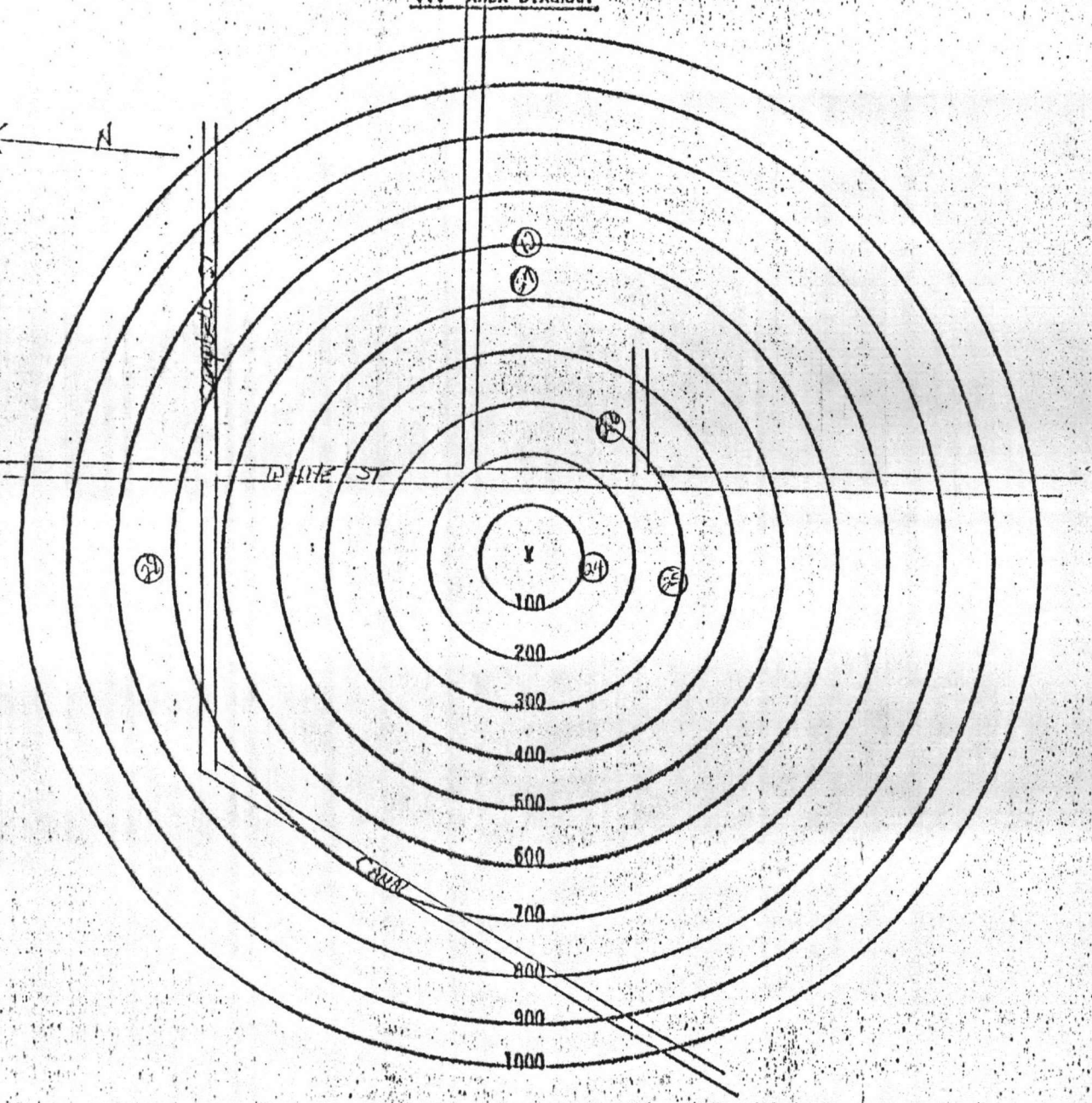

Owner Marine Corps Base, Camp Lejeune, N.C.

Location White St. New River Air Station
(Give Street Address)

INSTRUCTIONS:

1. Show all surrounding buildings and roads within 1000 feet of subject equipment which is located at center of circles.
2. Indicate location and type of building by the use of small numbered circles with the description below.
3. Show roads as lines representing the road edges. Indicate street names and highway numbers.
4. Show wooded or cleared areas by approximate boundary lines and the words "woods", "cleared", "cornfield", etc.
5. Indicate direction of north by arrow.

CODE	DESCRIPTION
1	12 Sewage Lift Stati
2	24 Shed
3	25 Avionics Shop
4	26 Engine Test Shop
5	27 Maintenance Hanger
6	28 Fuel Tanks
7	
8	
9	
10	

EXAMPLE 1 Church
2 Residence

X Indicates location of equipment.

ROUTING SLIP

JUN 0 1 1981

	ACTION	INFO	INITIAL
BMO		✓	M
ABMO		✓	[illegible]
ADMIN		✓	S
ENVIRON AFF	✓		J.W
F&A BRANCH			
MAINT NCO			
M&R			
OPNS			
PROP			
TELE			
UMACS			
UTIL	✓		
SECRETARY			

COMMENTS:

Gen Barker recommended S&A

look at this

Beth

Major M

HEADQUARTERS, MARINE CORPS BASE
CAMP LEJUENE, NORTH CAROLINA

Date 27 May 81

From: Assistant Chief of Staff, Logistics
To: ~~Asst~~ C/S Fac.

Subj: Attached.

1. For your action
2. Believe this was misaddressed

MCBCL 5216/24

ASSISTANT CHIEF OF STAFF, FACILITIES
HEADQUARTERS, MARINE CORPS BASE

Date 1 Jan 81

To: Base Maintenance Officer
Public Works Officer
Motor Transport Officer

Subj: _____

1. Forwarded, approved.

2. Forwarded, for information/action.

3. Forwarded, for comment and return endorsement hereon.

4. Forwarded, requesting cost estimate.

5. Forwarded, requesting light/air conditioning survey.

6. Forwarded, for your files.

VIR

MCBCL 11000/30

5/20

Acts Reg

For action + retention
Pls have legal review.

S

Bonny note & Return
For File
DDS

NREA

North Carolina Department of Natural Resources & Community Development
James B. Hunt, Jr., Governor
Howard N. Lee, Secretary
DIVISION OF ENVIRONMENTAL MANAGEMENT

February 3, 1981

Mr. D. B. Barker
Major General, U.S. Marine Corps
Commanding
Marine Corps Base
Camp Lejeune, North Carolina 28542

Dear Mr. Barker:

Subject: Permit No. 3769R2
Marine Corps Base
Camp Lejeune, North Carolina

In accordance with your application received December 12, 1980, we are forwarding herewith Permit No. 3769R2 to Marine Corps Base, Camp Lejeune, North Carolina for the construction and/or operation of air pollution abatement facilities and/or emission sources.

If any parts, requirements, or limitations contained in this permit are unacceptable to you, you have the right to an adjudicatory hearing before a hearing officer upon written demand to the Director within thirty (30) days following receipt of this permit, identifying the specific issues to be contended. Unless such demand is made, this permit shall be final and binding.

This permit shall be effective from the date of issuance until October 1, 1982, is nontransferable to future owners and operators, and shall be subject to the conditions and limitations as specified therein.

Sincerely yours,

A C Turnage
for Robert F. Helms
Acting Director

Enclosures

cc: A. C. Turnage, Jr.
Chuck Wakild
Regional Office Manager

NORTH CAROLINA

ENVIRONMENTAL MANAGEMENT COMMISSION

DEPARTMENT OF NATURAL RESOURCES & COMMUNITY DEVELOPMENT

Raleigh

P E R M I T

For the Discharge of Air Contaminants Into the Atmosphere

In accordance with the provisions of Article 21B of Chapter 143, General Statutes of North Carolina as amended, and other applicable Laws, Rules and Regulations,

PERMISSION IS HEREBY GRANTED TO

Marine Corps Base
Camp Lejeune, North Carolina

FOR THE

construction and operation of air cleaning devices and appurtenances consisting of two single stage, dry type electrostatic precipitators (plate area of 36,540 square feet each) in series with two multicyclones installed on the exhausts from four coal/No. 6 oil-fired boilers (maximum heat input of 114,500,000 BTU per hour each) to remove visible and particulate emissions, and for the discharge of the treated air and associated stack gases into the outdoor atmosphere at its facility located at Camp Lejeune, North Carolina, Onslow County,

in accordance with the application received December 12, 1980, and in conformity with the plans, specifications, and other supporting data, all of which are filed with the Department of Natural Resources & Community Development and are incorporated as part of this Permit.

This Permit shall be effective from the date of its issuance until October 1, 1982, is nontransferable to future owners and operators, and shall be subject to the following specified conditions and limitations:

1. The air cleaning devices shall be properly operated and maintained at all times in such a manner as to effect an overall reduction in air pollution in keeping with the application and otherwise to reduce air contamination to the extent necessary to comply with applicable Environmental Management Commission Regulations, including 15 NCAC 2D .0503, .0516, and .0521.

2. Reports on the operation and maintenance of the facilities shall be submitted to the Division of Environmental Management at such intervals and in such form and detail as may be required by the Division. Information required in such reports may include, but is not limited to, process weight rates, firing rates, hours of operation, and preventive maintenance schedules.

3. When particulate and/or visible emissions, due to a malfunction, of the process or control equipment, are or may be in excess of the amount which would be emitted during normal operation, the Division of Environmental Management shall be notified as promptly as possible but in no case later than twelve (12) hours following the start of such malfunction. Such notice shall specify the nature and cause of the malfunction, the time when such malfunction was first observed, the expected duration, and an estimate of the rate of emission. The term malfunction shall not be construed to include start-up or shut-down periods.

4. A violation of any term or condition of this Permit shall subject the Permittee to enforcement procedures contained in North Carolina General Statutes 143-215.114, including assessment of civil penalties.

5. Coal shall not be burned in the boilers unless the air cleaning devices are in operation.

Permit issued this the 3rd day of February, 1981.

NORTH CAROLINA ENVIRONMENTAL MANAGEMENT COMMISSION

G C Turnage

for Robert F. Helms, Acting Director
Division of Environmental Management
By Authority of the Environmental Management Commission

Permit No. 3769R2

North Carolina Department of Natural Resources & Community Development
James B. Hunt, Jr., Governor
Joseph W. Grimsley, Secretary
DIVISION OF ENVIRONMENTAL MANAGEMENT

September 8, 1981

Mr. C.G. Cooper
Commanding General, U.S. Marine
Corps
Marine Corps Base
Camp Lejeune, North Carolina 28542

Subject: Permit No. 4641R
Marine Corps Base
Camp Lejeune, North Carolina

Dear General Cooper:

In accordance with your application received August 24, 1981, we are forwarding herewith Permit No. 4641R to Marine Corps Base, Camp Lejeune, North Carolina for the construction and/or operation of air pollution abatement facilities and/or emission sources.

If any parts, requirements, or limitations contained in this permit are unacceptable to you, you have the right to an adjudicatory hearing before a hearing officer upon written demand to the Director within thirty (30) days following receipt of this permit, identifying the specific issues to be contended. Unless such demand is made, this permit shall be final and binding.

This permit shall be effective from the date of issuance until April 1, 1986, is nontransferable to future owners and operators, and shall be subject to the conditions and limitations as specified therein.

For Federal PSD increment tracking purposes, changes to the facility have consumed a maximum of 9.91 lb/hr of particulate and 71.53 lb/hr of SO_2.

Sincerely,

Charles Wakild
Regional Supervisor

Enclosure

cc: Mike Sewell
Robert Jamieson
Wilmington Regional Office
Central Files

Wayne

UNITED STATES MARINE CORPS
MARINE CORPS BASE
CAMP LEJEUNE, NORTH CAROLINA 28542

IN REPLY REFER TO

MAIN/TH/jik
13700
19 Aug 1981

Mr. Charles Wakild
Regional Supervisor
Department of Natural Resources
and Community Development
Division of Environmental Management
7225 Wrightsville Avenue
Wilmington, NC 28403

Dear Mr. Wakild:

Permit No. 4641 was issued by your division for construction and operation of a No. 6 oil-fired boiler (#54) at the Courthouse Bay Steam Generating Plant, with the provision that the boiler be placed in operation on or before 1 September 1981, or as this date may be amended.

The contractor who is installing the boiler for the U.S. Marine Corps has experienced delays in the receipt of materials required to complete the boiler installation. Accordingly, the 1 September deadline for placing the boiler on line cannot be met. It is therefore requested that permit no. 4641 be amended to reflect an October 16, 1981 deadline for placing the boiler into operation.

If you have any further questions on this matter, please contact Mr. Danny Sharpe, Base Maintenance Division, telephone (919) 451-5003.

Sincerely,

K. P. Millice

K. P. MILLICE, Jr.
Colonel
Assistant Chief of Staff, Facilities
By direction of the Commanding General

RECEIVED
AUG 24 1981
WILMINGTON REGIONAL OFFICE
DEM

NORTH CAROLINA

ENVIRONMENTAL MANAGEMENT COMMISSION

DEPARTMENT OF NATURAL RESOURCES AND COMMUNITY DEVELOPMENT

Raleigh

P E R M I T

For the Discharge of Air Contaminants Into the Atmosphere

In accordance with the provisions of Article 21B of Chapter 143, General Statutes of North Carolina as amended, and other applicable Laws, Rules and Regulations,

PERMISSION IS HEREBY GRANTED TO

Marine Corps Base
Camp Lejeune, North Carolina

FOR THE

construction and operation of a No. 6 oil-fired boiler (#54) (maximum heat input of 24,200,000 BTU per hour) and for the operation of two No. 6 oil-fired boilers (17,800,000 BTU per hour heat input and 11,000,000 BTU per hour heat input respectively) and for the discharge of the associated stack gases at its facility located at Peach Street, Courthouse Bay, Camp Lejeune, North Carolina, Onslow County,

in accordance with the application received August 24, 1981, and in conformity with the plans, specifications, and other supporting data, all of which are filed with the Department of Natural Resources and Community Development and are incorporated as part of this Permit.

This Permit shall be effective from the date of its issuance until April 1, 1986, is nontransferable to future owners and operators, and shall be subject to the following specified conditions and limitations:

1. This permit shall become voidable unless the No. 6 oil-fired boiler (#54) is constructed in accordance with the approved plans, specifications, and other supporting data and placed in operation on or before October 16, 1981, or as this date may be amended.

2. The facilities shall be properly operated and maintained at all times in such a manner as to effect an overall reduction in air pollution in keeping with the application and otherwise to reduce air contamination to the extent necessary to comply with applicable Environmental Management Commission Regulations, including 15 NCAC 2D .0503, .0516, and .0521, and in no case shall the sulfur dioxide emissions from the boilers exceed 2.3 pounds per million BTU input.

3. Reports on the operation and maintenance of the facilities shall be submitted to the Division of Environmental Management at such intervals and in such form and detail as may be required by the Division. Information required in such reports may include, but is not limited to, process weight rates, firing rates, hours of operation, and preventive maintenance schedules.

4. Camp Lejeune Marine Base, at least ninety (90) days prior to the expiration of this Permit, shall request its extension by letter. The letter should include the permit number and a description of modifications, if any, that have been made.

5. This permit is subject to revocation or modification upon a determination that information contained in the application or presented in support thereof is incorrect, conditions under which the permit renewal was granted have changed, or violations of conditions contained in the permit have occurred.

6. A violation of any term or condition of this Permit shall subject the Permittee to enforcement procedures contained in North Carolina General Statutes 143-215.114, including assessment of civil penalties.

Permit issued this the 8th day of September, 1981.

NORTH CAROLINA ENVIRONMENTAL MANAGEMENT COMMISSION

Chas Wakild

Charles Wakild, Regional Supervisor
Division of Environmental Management
By Authority of the Environmental Management Commission

Permit No. 4641R

PP-2675

North Carolina Department of Natural Resources & Community Development

James B. Hunt, Jr., Governor

Howard N. Lee, Secretary

DIVISION OF ENVIRONMENTAL MANAGEMENT

May 28, 1981

Mr. D.B. Barker
Major General, U.S. Marine Corps
Commanding
Marine Corps Base
Camp Lejeune, North Carolina 28542

Subject: Permit No. 4645
Marine Corps Base
Camp Lejeune, North Carolina

Dear General Barker:

In accordance with your application received May 1, 1981, we are forwarding herewith Permit No. 4645 to Marine Corps Base, Camp Lejeune, North Carolina for the construction and/or operation of air pollution abatement facilities and/or emission sources.

If any parts, requirements, or limitations contained in this permit are unacceptable to you, you have the right to an adjudicatory hearing before a hearing officer upon written demand to the Director within thirty (30) days following receipt of this permit, identifying the specific issues to be contended. Unless such demand is made, this permit shall be final and binding.

This permit shall be effective from the date of issuance until April 1, 1986, is nontransferable to future owners and operators, and shall be subject to the conditions and limitations as specified therein.

For Federal PSD increment tracking purposes, changes to the facility have consumed a maximum of 1.79 lbs/hr of particulate and 12.88 lb/hr of SO_2.

Sincerely,

Charles Wakild
Regional Supervisor

Enclosure

cc: Stan Taylor
Robert Jamieson
Wilmington Regional Office
Central Files

NORTH CAROLINA

ENVIRONMENTAL MANAGEMENT COMMISSION

DEPARTMENT OF NATURAL RESOURCES AND COMMUNITY DEVELOPMENT

RALEIGH

P E R M I T

For the Discharge of Air Contaminants Into the Atmosphere

In accordance with the provisions of Article 21B of Chapter 143, General Statutes of North Carolina as amended, and other applicable Laws, Rules and Regulations,

PERMISSION IS HEREBY GRANTED TO

Marine Corps Base
Camp Lejeune, North Carolina

FOR THE

construction and operation of a No. 6 oil-fired boiler (#9) (maximum heat input of 16,500,000 BTU per hour) and for the operation of a No. 6 oil-fired boiler (#10) (maximum heat input of 11,200,000 BTU per hour), and for the discharge of the associated stack gases at its facility located at Seth Williams Boulevard, Paradise Point, Camp Lejeune, North Carolina, Onslow County,

in accordance with the application received May 1, 1981, and in conformity with the plans, specifications, and other supporting data, all of which are filed with the Department of Natural Resources and Community Development and are incorporated as part of this Permit.

This Permit shall be effective from the date of its issuance until April 1, 1986, is nontransferable to future owners and operators, and shall be subject to the following specified conditions and limitations:

1. This permit shall become voidable unless the No. 6 oil-fired boiler (#9) is constructed in accordance with the approved plans, specifications, and other supporting data and placed in operation on or before September 1, 1981, or as this date may be amended.

2. The facilities shall be properly operated and maintained at all times in such a manner as to effect an overall reduction in air pollution in keeping with the application and otherwise to reduce air contamination to the extent necessary to comply with applicable Environmental Management Commission Regulations, including 15 NCAC 2D .0503, .0516, and .0521, and in no case shall the sulfur dioxide emissions from the boilers exceed 2.3 pounds per million BTU input.

3. Reports on the operation and maintenance of the facilities shall be submitted to the Division of Environmental Management at such intervals and in such form and detail as may be required by the Division. Information required in such reports may include, but is not limited to, process weight rates, firing rates, hours of operation, and preventive maintenance schedules.

4. Camp Lejeune Marine Base, at least ninety (90) days prior to the expiration of this Permit, shall request its extension by letter. The letter should include the permit number and a description of modifications, if any, that have been made.

5. This permit is subject to revocation or modification upon a determination that information contained in the application or presented in support thereof is incorrect, conditions under which the permit renewal was granted have changed, or violations of conditions contained in the permit have occurred.

6. A violation of any term or condition of this Permit shall subject the Permittee to enforcement procedures contained in North Carolina General Statutes 143-215.114, including assessment of civil penalties.

Permit issued this the 28th day of May.

NORTH CAROLINA ENVIRONMENTAL MANAGEMENT COMMISSION

Charles Wakild, Regional Supervisor
Division of Environmental Management
By Authority of the Environmental Management Commission

UNITED STATES MARINE CORPS
Marine Corps Base
Camp Lejeune, North Carolina 28542

FAC:RCP:mkc
6280
4 Jun 1981

From: Commanding General
To: Base Maintenance Officer
Via: Staff Judge Advocate

Subj: Permit No. 4645 for the construction and/or operation of air pollution abatement facilities and/or emission sources

Encl: (1) Regional Supervisor, NC Dept of Natural Resources and Community Development ltr of 28 May 1981 w/encl

1. Enclosure (1) is forwarded for appropriate action.

K. P. MILLICE, Jr.
By direction

RECEIVED

MAY 1 1981

WILMINGTON REGIONAL OFFICE

DEM

NORTH CAROLINA

ENVIRONMENTAL MANAGEMENT COMMISSION

RALEIGH

APPLICATION FOR

A "PERMIT"

TO CONSTRUCT AND OPERATE AIR

POLLUTION ABATEMENT FACILITIES AND/OR EMISSION SOURCES

Filed By: Major General D. B. Barker
(Name)

Marine Corps Base
(Address)

Camp Lejeune, N. C. 28542

AQ-22

APPLICATION INSTRUCTIONS

THIS APPLICATION IS SUBJECT TO REJECTION UNLESS ALL REQUIRED INFORMATION IS SUBMITTED

1. ATTACH DETAILED ENGINEERING DRAWINGS OF SOURCE(S), PROCESS(ES) AND COLLECTION DEVICE(S) AS REQUESTED IN EACH SECTION. IF MULTIPLE SOURCES OR DEVICES, USE ADDENDUM SHEETS AS NECESSARY.

2. Submit application, detailed engineering drawings, specifications and other supporting data and documents in TRIPLICATE.

3. Attach additional sheets as necessary to complete any portion of the application.

4. The application MUST BE SIGNED by the RESPONSIBLE INDIVIDUAL of the company that is to PURCHASE AND OPERATE the facilities for which a Permit is applied.

5. ALL APPLICANTS MUST COMPLETE THE FIRST PAGE AND SECTIONS I AND VI.

6. If an Incinerator, Fuel Burning Source, Wet Collection Device or Dry Collection Device is to be installed and operated, COMPLETE SECTIONS II, III, IV or V respectively.

7. All applications should be mailed to: ENVIRONMENTAL MANAGEMENT COMMISSION
AIR QUALITY SECTION
P. O. Box 27687
Raleigh, North Carolina 27611

APPLICATION FOR A "PERMIT"
To Construct and Operate Air Pollution Abatement Facilities and/or Emission Sources
Three Copies to be Submitted
Fourth Copy Should be Retained by Applicant

Date: 7 April 1981

In accordance with the provisions of Article 21 of Chapter 143, General Statutes of North Carolina as amended, application is hereby made by U. S. Marine Corps
(Name of Company, Establishment, Town, Etc.) (Include Division or Plant Name in Addition to Parent Company if Applicable) in the County of Onslow at Camp Lejeune, N. C. 28542
(Street and City or Town Address of Plant or Facility)
for issuance of a "Permit" to construct and operate air pollution abatement facilities and/or emissions sources at above location as specified in the accompanying drawings, specifications, and other pertinent data:

1. Nature of Operation Conducted at the Above Facility: Military Operation

2. Description of Process(es) Whose Emission(s) is/are to be Controlled by the Facility or Source(s) Which is/are to be Constructed or Altered. (Complete Section I)

   Steam Boiler, No. 9, Bldg 2615; No. 6 oil fired

3. Furnish Type and Narrative Description of Proposed Control Device(s).(Complete Appropriate Supplemental Data Sheets for Control Device to be Installed and/or Operated. Include Make and Model Number of Control Device(s) and Number of Identical Units)

   No control device

4.

Contaminant Emitted:	Weight Rate of Emissions (lb/hr): Without Control Device	With Control Device	Control Efficiency (%): Without Control Device	With Control Device
SO_x and Particulates	39.27	N/A	N/A	N/A

5. Name and Address of Engineering Firm that Prepared Plans: Smith/Sinnett Architects, P.A.
   Raleigh, N. C.

6. Ultimate Disposition of Collected Pollutants: N/A

7. Date on Which Facilities are to be Completed and in Operation: 1 September, 19 81

8. Indicate Period of Time for Which Facilities are Estimated to be Adequate: 20 Years

9. Estimate Cost of Air Pollution Control Device $ 0

10. Hours Facility is Operated Per Year: 8760

Name: Major General D. B. Barker, USMC
(Responsible Individual of Company Purchasing/Operating Facility...PLEASE PRINT)

Mailing Address: Marine Corps Base
Camp Lejeune
North Carolina 28542

Signature and Title: D B Barker
D. B. BARKER, MAJOR GENERAL
Commanding General

Telephone Number: 451-5024

AQ-22

I. GENERAL DATA FOR PROCESSES

*Attach detailed process engineering drawings, equipment drawings and flow diagrams for the process(es) or source(s) being constructed or altered.

Name of Process: Heating Plant

Total Weight of Materials Entering this Process: 112 gal/hr ~~lb/hr or ton/hr~~

Volume and Temperature of Air Flow Entering Control Device: _____ CFM @ _____ °F

Volume and Temperature of Effluent at Discharge Point to Atmosphere: _____ CFM @ _____ °F

Pollutant(s) to be Controlled: _____

Height of Process Stack or Vent Above Ground Level 29 ft. Inside area of Stack 3.14 ft^2.

Particulate Emission Rate (Before Control) 2.76 lb/hr

Particle Size Distribution: 0-5μ____%, 5-10μ____%, 10-20μ____%, 20-30μ____%, 30-40μ____%, 40-50μ____%, >50μ____%

Gaseous Emission(s): Name (Chemical Formula)	μg/m^3, PPM	or lb/hr
SO_x		36.51

II. SUPPLEMENTARY DATA FOR INCINERATORS (Including Conical Incinerators)

Circle Type of Waste or Indicate Composition: Type 0 Type I Type II Type III Type IV

Combustible: ____% Non-Combustible: ____% Moisture: ____% Heat Value: ____BTU/lb

Total Waste Generated Per Day: _____ lb. Hours Incinerator will be Operated: _____ hrs/day

Design Capacity for Above Waste: _____ lbs/hr Manufacturer and Model Number; Approximate Cost: _____

Primary Chamber Volume: _____ $ft.^3$ Secondary Chamber Volume: _____ $ft.^3$

Air Requirements: Total Excess Air ____% Draft: Natural ____ Induced ____ Other ____
Overfire Air: ____cfm Underfire Air: ____cfm

Is there an Electronically Controlled, Exhaust Gas Temperature Modulated, Damper Installed on the Conical Incinerator for: Overfire Air Supply____, Underfire Air Supply____, Dome____Temperature Set Point____°F

Flame Port Temperature: _____ °F Secondary Chamber Temperature: _____ °F

Is there a Continuous Exhaust Gas Temperature Recorder? Yes____ No____

Stack:
Inside Area ____$ft.^2$ Height ____ft. Gas Velocity ____ft/sec Temperature ____°F Fan Capacity ____cfm Stack Lined? _____

Is there a Wet Scrubber?

Yes ____ No ____ Flow Rate of H_2O into Scrubber ____gal/min Temperature Before Scrubber ____°F

Aux. Fuel: Oil _____ Gas _____ Other _____ Burner Rating: Primary Chamber _____BTU/hr Secondary Chamber _____BTU/hr Stack _____BTU/hr

Primary Burner: Is there a Preheat Timer? Yes ____ No ____ Preheating Time: _____min.

Secondary Burner or Afterburner: Is there a Timer? Yes ____ No ____ Length of Time Burner is Operated _____min.

Is the Timer Reset by Charging Door? Yes ____ No ____ Other Mode of Burner Control _____

Type of Feed: Manual _____ Automatic _____ If Automatic, Describe _____

Distance from Incinerator to Nearest Structure(s) in which People Live and/or Work.____ft.

Signature: _____ Title: _____

*Attach detailed dimensioned drawing or sketch showing internal features of dryers, wood or coal fired boilers, and recovery boilers.

Type of Fuel Burning Source Boiler Stack Height Above Ground Level 29 ft. Inside Area of Stack 3.14 ft^2

Make and Model Number Cleaver-Brooks Model CB-600-400 Volume of Furnace 123 ft^3

Specify Actual Amount of Each Fuel Used in Above Source (s):

Coal ____ lb/hr; Oil Grade 6 Amount 112 gal/hr, at 146,900 BTU/gal and ____ lb/gal or ____ lb/hr

Wood ____ lb/hr; Natural Gas ____ SCF/hr, at ____ BTU/SCF; Other _____

(Specify type, amount and heating value)

Specify Maximum Rating for Each Fuel Burning Source:

Coal ____ Oil 112 Wood ____ Natural Gas ____ Other _____

Maximum Sulfur Content of Fuel 2.05 % Specify Standby Fuel None Maximum % Sulfur ____

Type of Solid Fuel Burning Equipment Used: Hand Fired ___ Spreader Stoker ___ Underfeed Stoker ___ Chain Grate ___

Traveling Grate ___ Pulverizer ___ Cyclone Furnace ___ Other (Specify) _____

Ash Content of Fuel: Specify Method and Schedule of Tube Cleaning, if Applicable:

Coal ____ % Wood ____ % Other ____ % Lancing _____ Tube Blowing _____ Schedule _____

Emission Control Equipment (Describe in Detail in Sections IV and V)

Collection Device: ~~Wet~~ ____ Dry ____ Steam Injection ____ Air Injection ____ Is Collected Flyash Reinjected? ____

Draft on Boiler (Natural ____ Induced X) ____ cfm at ____ °F

Total Number of Fuel Burning Sources Within Property Boundaries: 2

Maximum Capacity Rating, by Type, for All Fuel Burning Units Excluding that Itemized Above: (Total Like Units) 1

Coal ____ lb/hr Wood ____ lb/hr Oil 76 gal/hr Natural Gas ____ SCF/hr

IV. SUPPLEMENTARY DATA FOR WET COLLECTION DEVICES

Attach detailed engineering drawings of the control device and particle size versus removal efficiency curves.

Liquid Scrubbing Medium and Additives: _____

Total Liquid Injection Rate (Include Recirculated and Make-up Rates) ____ gal/min or gal/1000 ft^3

Operating Pressure Drop Across Device ____ in H_2O

ANSWER FOLLOWING QUESTIONS FOR SPECIFIC DEVICE:

VENTURI SCRUBBER: Inlet Area ____ in^2 Throat Area ____ in^2 Throat Velocity ____ ft/sec

GRAVITY SPRAY CHAMBER: Number of Nozzles ____ Liquid Droplet Size ____ u Co-Current ____ Countercurrent ____

WET CYCLONE:

Body Diameter ____ in Length _____ in

Inlet Area _____ in^2 Number of Nozzles _____

Outlet Area _____ in^2

PACKED TOWER OR PLATE TOWER:

Cross-Sectional Area _____ ft^2 Type of Plate _____

Length _____ ft Depth of Packing _____ ft

Number of Plates _____ Type of Packing _____

OTHER WET COLLECTION DEVICES: GIVE COMPLETE DESCRIPTION INCLUDING DESIGN PARAMETERS AND DETAILED ENGINEERING DRAWINGS.

Signature: _____ Title: _____

SUPPLEMENTARY DATA FOR DRY COLLECTION D[illegible]ES

Attach detailed engineering drawings of the control device and particle size versus removal efficiency curves.

BAGHOUSES: Cloth Area _____ ft^2

Bag Material _____

Number of Compartments _____

Pressure - Drop Total _____ in H_2O

Method of Cleaning _____

Air-to-Cloth Ratio _____ ft/min

Time Between Cleaning _____ mins, hrs

ELECTROSTATIC PRECIPITATORS:

GENERAL:

Effective Area of Grounded Collector Plates _____ ft^2

Number of Compartments or Chambers _____ Number of Cells per Compartment _____

Electrical Field Gradient at the Discharge or Emitting Electrodes _____ KV/in

Average Electrical Field Gradient at the the Grounded Collecting Electrodes _____ KV/in

Fields of Treatment _____ Potential Applied to Emitting Wires _____ KV

SINGLE STAGE TYPE:

Distance Between Emitting Wires and Collecting Plates _____ in.

Number of Isolatable Bus Sections _____ Corona Power _____ Watts/1000 cfm

TWO STAGE TYPE:

Distance Between First Stage Emitting Electrodes and Field Receiver Electrodes (Ground) _____ in

Potential Applied to Second Stage Emitting Plates _____ KV

Distance Between Second Stage Emitting Plates and Grounded Collection Plates _____ in

CYCLONES/MULTICYCLONES:

Simple Cyclone

Diameter _____ in

Inlet Dimensions _____

Outlet Dimensions _____

Pressure Drop _____ in H_2O

Number of Cyclones _____

Multicyclone

Diameter _____ in

Inlet Dimensions of Individual Cyclone _____

Outlet Dimensions of Individual Cyclone _____

Pressure Drop _____ in H_2O

Number of Cyclones _____

OTHER DRY COLLECTION DEVICES: GIVE COMPLETE DETAILED ENGINEERING DESCRIPTION AND DRAWINGS.

Signature: _____ Title: _____

Boiler 9

VI. AREA DIAGRAM

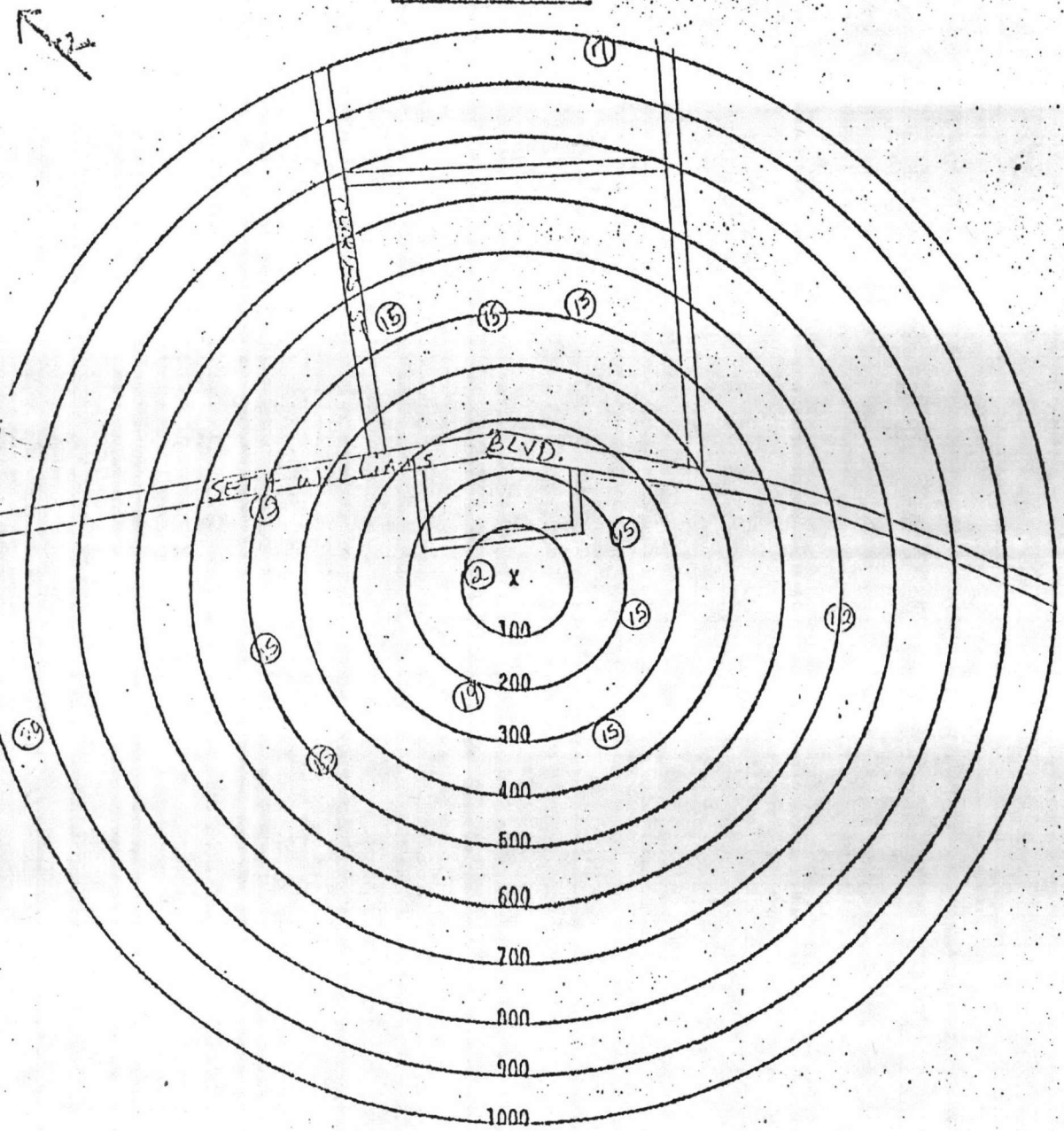

Owner Marine Corps Base, Camp Lejeune, N.C.

Location Seth Williams, Paradise Point
(Give Street Address)

INSTRUCTIONS:

1. Show all surrounding buildings and roads within 1000 feet of subject equipment which is located at center of circles.
2. Indicate location and type of building by the use of small numbered circles with the description below.
3. Show roads as lines representing the road edges. Indicate street names and highway numbers.
4. Show wooded or cleared areas by approximate boundary lines and the words "woods", "cleared", "cornfield", etc.
5. Indicate direction of north by arrow.

CODE	DESCRIPTION	
1		12 Sewage Lift Station
2	Mess Hall	15 Barracks-Bachelor
3		19 Swimming Pool
4		20 Residence
5		
6		
7	Warehouse	
8		
9		
10		

EXAMPLE 1 Church
2 Residence

X Indicates location of equipment.

BOILER #10

NORTH CAROLINA

ENVIRONMENTAL MANAGEMENT COMMISSION

RALEIGH

APPLICATION FOR

A "PERMIT"

TO CONSTRUCT AND OPERATE AIR

POLLUTION ABATEMENT FACILITIES AND/OR EMISSION SOURCES

Filed By: Major General D. B. Barker
(Name)

Marine Corps Base
(Address)

Camp Lejeune, North Carolina

AQ-22

APPLICATION INSTRUCTIONS

THIS APPLICATION IS SUBJECT TO REJECTION UNLESS ALL REQUIRED INFORMATION IS SUBMITTED

1. ATTACH DETAILED ENGINEERING DRAWINGS OF SOURCE(S), PROCESS(ES) AND COLLECTION DEVICE(S) AS REQUESTED IN EACH SECTION. IF MULTIPLE SOURCES OR DEVICES, USE ADDENDUM SHEETS AS NECESSARY.

2. Submit application, detailed engineering drawings, specifications and other supporting data and documents in TRIPLICATE.

3. Attach additional sheets as necessary to complete any portion of the application.

4. The application MUST BE SIGNED by the RESPONSIBLE INDIVIDUAL of the company that is to PURCHASE AND OPERATE the facilities for which a Permit is applied.

5. ALL APPLICANTS MUST COMPLETE THE FIRST PAGE AND SECTIONS I AND VI.

6. If an Incinerator, Fuel Burning Source, Wet Collection Device or Dry Collection Device is to be installed and operated, COMPLETE SECTIONS II, III, IV or V respectively.

7. All applications should be mailed to: ENVIRONMENTAL MANAGEMENT COMMISSION
AIR QUALITY SECTION
P. O. Box 27687
Raleigh, North Carolina 27611

APPLICATION FOR A "PERMIT"
To Construct and Operate Air Pollution Abatement Facilities and/or Emission Sources
Three Copies to be Submitted
Fourth Copy Should be Retained by Applicant

Date: 24 Sep 1980

In accordance with the provisions of Article 21 of Chapter 143, General Statutes of North Carolina as amended, application is hereby made by Marine Corps Base, Camp Lejeune, North Carolina
(Name of Company, Establishment, Town, Etc.) (Include Division or Plant Name in Addition to Parent Company if Applicable) in the County of Onslow at Jacksonville, North Carolina
(Street and City or Town Address of Plant or Facility)
for issuance of a "Permit" to construct and operate air pollution abatement facilities and/or emissions sources at above location as specified in the accompanying drawings, specifications, and other pertinent data:

1. Nature of Operation Conducted at the Above Facility: Military Operation

2. Description of Process(es) Whose Emission(s) is/are to be Controlled by the Facility or Source(s) Which is/are to be Constructed or Altered. (Complete Section I)
Boiler, No. 6 Fuel Oil Boiler 10
Bldg PP-2615

3. Furnish Type and Narrative Description of Proposed Control Device(s).(Complete Appropriate Supplemental Data Sheets for Control Device to be Installed and/or Operated. Include Make and Model Number of Control Device(s) and Number of Identical Units).
No. 6 Oil Fired, no control device.

4.

Contaminant Emitted:	Weight Rate of Emissions (lb/hr): Without Control Device	With Control Device	Control Efficiency (%): Without Control Device	With Control Device
SO_x and Particulate	26.64	N/A	N/A	N/A

5. Name and Address of Engineering Firm that Prepared Plans:

6. Ultimate Disposition of Collected Pollutants:
None

7. Date on Which Facilities are to be Completed and in Operation:
October, 19 80

8. Indicate Period of Time for Which Facilities are Estimated to be Adequate: 20 Years

9. Estimate Cost of Air Pollution Control Device $ 0

10. Hours Facility is Operated Per Year: 8,760

Name: Major General D. B. Barker USMC
(Responsible Individual of Company Purchasing/Operating Facility...PLEASE PRINT)

Mailing Address: Marine Corps Base
Camp Lejeune
North Carolina 28542

Signature and Title: DB Barker
D. B. BARKER, MAJOR GENERAL, USMC
Commanding General

Telephone Number: 451-5024

AQ-22

I. GENERAL DATA FOR PROCESSES

Attach detailed process engineering drawings, equipment drawings and flow diagrams for the process(es) or source(s) being constructed or altered.

Name of Process: Heating and Steam Plant

Total Weight of Materials Entering this Process: 76 gals ~~xx~~/hr ~~xxxxxxx~~

Volume and Temperature of Air Flow Entering Control Device: _____ CFM @ _____ °F

Volume and Temperature of Effluent at Discharge Point to Atmosphere: _____ CFM @ _____ °F

Pollutant(s) to be Controlled: _____

Height of Process Stack or Vent Above Ground Level 28 ft. Inside area of Stack 4.26 ft^2.

Particulate Emission Rate (Before Control) 1.87 lb/hr

Particle Size Distribution: 0-5μ____%, 5-10μ____%, 10-20μ____%, 20-30μ____%, 30-40μ____%, 40-50μ____%, >50μ____%

Gaseous Emission(s): Name (Chemical Formula)	μg/m³, PPM	or lb/hr
SO_x		24.77

II. SUPPLEMENTARY DATA FOR INCINERATORS (Including Conical Incinerators)

Circle Type of Waste or Indicate Composition: Type 0 Type I Type II Type III Type IV

Combustible: _____% Non-Combustible: _____% Moisture: _____% Heat Value: _____BTU/lb

Total Waste Generated Per Day: _____ lb. Hours Incinerator will be Operated: _____ hrs/day

Design Capacity for Above Waste: _____ lbs/hr Manufacturer and Model Number; Approximate Cost: _____

Primary Chamber Volume: _____ $ft.^3$ Secondary Chamber Volume: _____ $ft.^3$

Air Requirements: Total Excess Air ____% Draft: Natural ____ Induced ____ Other ____

Overfire Air: ____cfm Underfire Air: ____cfm

Is there an Electronically Controlled, Exhaust Gas Temperature Modulated, Damper Installed on the Conical Incinerator for: Overfire Air Supply____, Underfire Air Supply____, Dome____Temperature Set Point____°F

Flame Port Temperature: _____ °F Secondary Chamber Temperature: _____ °F

Is there a Continuous Exhaust Gas Temperature Recorder? Yes____ No____

Stack:

Inside Area ____$ft.^2$ Height ____ft. Gas Velocity ____ft/sec Temperature ____°F Fan Capacity ____cfm Stack Lined? _____

Is there a Wet Scrubber?

Yes ____ No ____ Flow Rate of H_2O into Scrubber ____gal/min Temperature Before Scrubber ____°F

Aux. Fuel: Oil _____ Gas _____ Other _____ Burner Rating: Primary Chamber _____BTU/hr Secondary Chamber _____BTU/hr Stack _____BTU/hr

Primary Burner: Is there a Preheat Timer? Yes ____ No ____ Preheating Time: _____min.

Secondary Burner or Afterburner: Is there a Timer? Yes ____ No ____ Length of Time Burner is Operated ____min.

Is the Timer Reset by Charging Door? Yes ____ No ____ Other Mode of Burner Control _____

Type of Feed: Manual _____ Automatic _____ If Automatic, Describe _____

Distance from Incinerator to Nearest Structure(s) in which People Live and/or Work.____ft.

Signature: _____ Title: _____

*Attach detailed dimensioned drawing or sketch showing internal features of dryers, wood or coal fired boilers, and recovery boilers.

Type of Fuel Burning Source Boiler Stack Height Above Ground Level 28 ft. Inside Area of Stack 4.26 ft^2

Make and Model Number VL Erie City Iron Works Volume of Furnace ____ ft^3

Specify Actual Amount of Each Fuel Used in Above Source (s):

Coal ____ lb/hr; Oil Grade 6 Amount 76 gal/hr, at 146,900 BTU/gal and ____ lb/gal or ____ lb/hr

Wood ____ lb/hr; Natural Gas ____ SCF/hr, at ____ BTU/SCF; Other _____

(Specify type, amount and heating value)

Specify Maximum Rating for Each Fuel Burning Source:

Coal ____ Oil 76 g/hr Wood ____ Natural Gas ____ Other _____

Maximum Sulfur Content of Fuel 2.05% Specify Standby Fuel None Maximum % Sulfur ____

Type of Solid Fuel Burning Equipment Used: Hand Fired ___ Spreader Stoker ___ Underfeed Stoker ___ Chain Grate ___

Traveling Grate ___ Pulverizer ___ Cyclone Furnace ___ Other (Specify) _____

Ash Content of Fuel: Specify Method and Schedule of Tube Cleaning, if Applicable:

Coal ____ % Wood ____ % Other ____ % Lancing _____ Tube Blowing _____ Schedule _____

Emission Control Equipment (Describe in Detail in Sections IV and V)

Collection Device: Wet ____ Dry ____ Steam Injection ____ Air Injection ____ Is Collected Flyash Reinjected? ____

Draft on Boiler (Natural ____ Induced X) ____ cfm at ____ °F

Total Number of Fuel Burning Sources Within Property Boundaries: 2

Maximum Capacity Rating, by Type, for All Fuel Burning Units Excluding that Itemized Above: (Total Like Units) 1

Coal ____ lb/hr Wood ____ lb/hr Oil 74 gal/hr Natural Gas ____ SCF/hr

IV. SUPPLEMENTARY DATA FOR WET COLLECTION DEVICES

Attach detailed engineering drawings of the control device and particle size versus removal efficiency curves.

Liquid Scrubbing Medium and Additives: _____

Total Liquid Injection Rate (Include Recirculated and Make-up Rates) ____ gal/min or gal/1000 ft^3

Operating Pressure Drop Across Device ____ in H_2O

ANSWER FOLLOWING QUESTIONS FOR SPECIFIC DEVICE:

VENTURI SCURBBER: Inlet Area ____ in^2 Throat Area ____ in^2 Throat Velocity ____ ft/sec

GRAVITY SPRAY CHAMBER: Number of Nozzles ____ Liquid Droplet Size ____ u Co-Current ____ Countercurrent ____

WET CYCLONE:

Body Diameter ____ in Length _____ in

Inlet Area _____ in^2 Number of Nozzles _____

Outlet Area _____ in^2

PACKED TOWER OR PLATE TOWER:

Cross-Sectional Area _____ ft^2 Type of Plate _____

Length _____ ft Depth of Packing _____ ft

Number of Plates _____ Type of Packing _____

OTHER WET COLLECTION DEVICES: GIVE COMPLETE DESCRIPTION INCLUDING DESIGN PARAMETERS AND DETAILED ENGINEERING DRAWINGS.

Signature: _____ Title: _____

V. SUPPLEMENTARY DATA FOR DRY COLLECTI JEVICES

Attach detailed engineering drawings of the control device and particle size versus removal efficiency curves.

BAGHOUSES: Cloth Area _____ ft^2

Bag Material _____

Number of Compartments _____

Pressure - Drop Total _____ in H_2O

Method of Cleaning _____

Air-to-Cloth Ratio _____ ft/min

Time Between Cleaning _____ mins, hrs

ELECTROSTATIC PRECIPITATORS:

GENERAL:

Effective Area of Grounded Collector Plates _____ ft^2

Number of Compartments or Chambers _____ Number of Cells per Compartment _____

Electrical Field Gradient at the Discharge or Emitting Electrodes _____ KV/in

Average Electrical Field Gradient at the the Grounded Collecting Electrodes _____ KV/in

Fields of Treatment _____ Potential Applied to Emitting Wires _____ KV

SINGLE STAGE TYPE:

Distance Between Emitting Wires and Collecting Plates _____ in.

Number of Isolatable Bus Sections _____ Corona Power _____ Watts/1000 cfm

TWO STAGE TYPE:

Distance Between First Stage Emitting Electrodes and Field Receiver Electrodes (Ground) _____ in

Potential Applied to Second Stage Emitting Plates _____ KV

Distance Between Second Stage Emitting Plates and Grounded Collection Plates _____ in

CYCLONES/MULTICYCLONES:

Simple Cyclone

Diameter _____ in

Inlet Dimensions _____

Outlet Dimensions _____

Pressure Drop _____ in H_2O

Number of Cyclones _____

Multicyclone

Diameter _____ in

Inlet Dimensions of Individual Cyclone _____

Outlet Dimensions of Individual Cyclone _____

Pressure Drop _____ in H_2O

Number of Cyclones _____

OTHER DRY COLLECTION DEVICES: GIVE COMPLETE DETAILED ENGINEERING DESCRIPTION AND DRAWINGS.

Signature: _____

Title: _____

Boiler 10

VI. AREA DIAGRAM

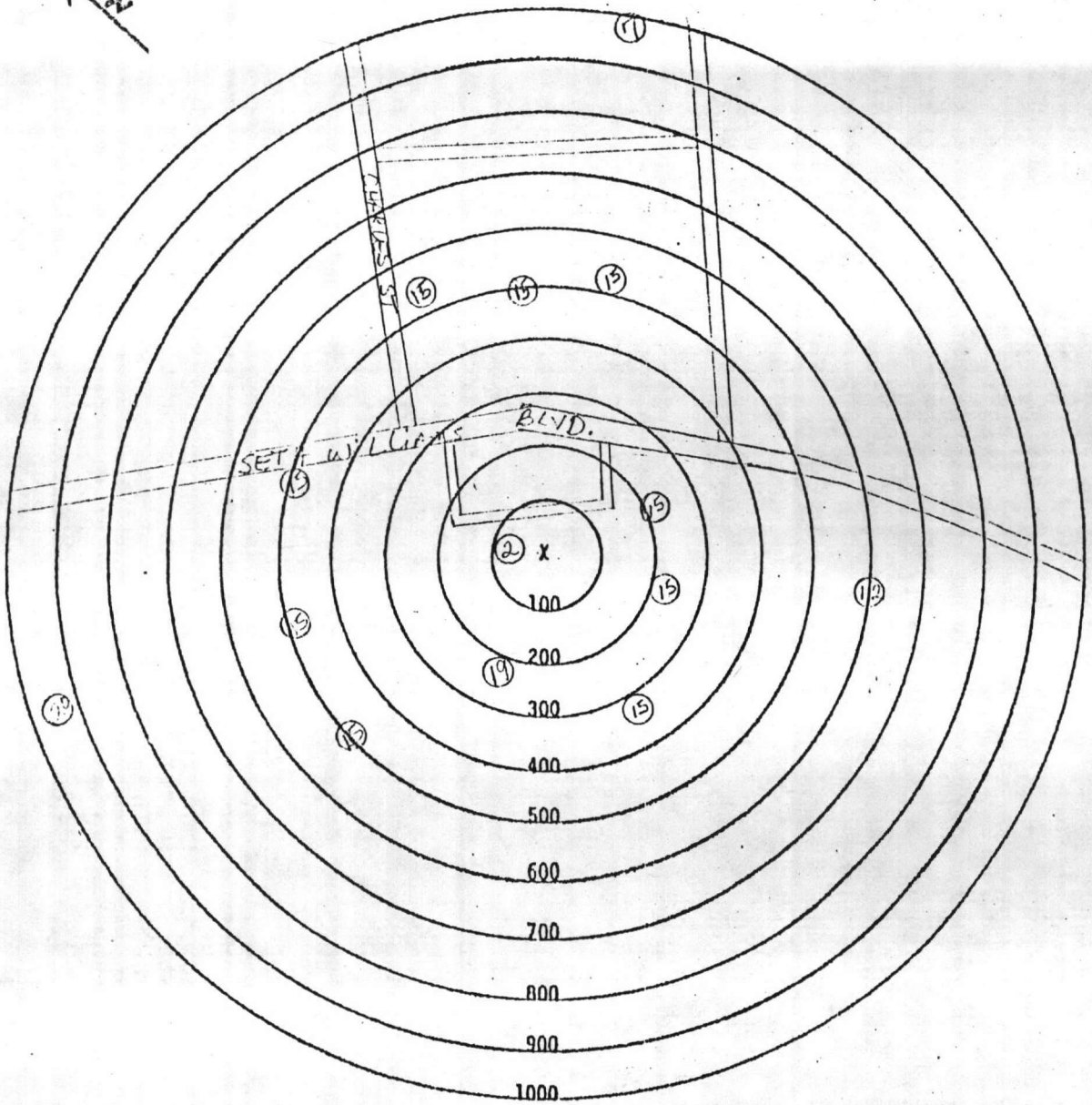

Owner Marine Corps Base, Camp Lejeune, N.C.

Location Seth Williams, Paradise Point
(Give Street Address)

INSTRUCTIONS:

1. Show all surrounding buildings and roads within 1000 feet of subject equipment which is located at center of circles.

2. Indicate location and type of building by the use of small numbered circles with the description below.

3. Show roads as lines representing the road edges. Indicate street names and highway numbers.

4. Show wooded or cleared areas by approximate boundary lines and the words "woods", "cleared", "cornfield", etc.

5. Indicate direction of north by arrow.

CODE	DESCRIPTION		
1		12	Sewage Lift St
2	Mess Hall	15	Barracks--Bache
3		19	Swimming Pool
4		20	Residence
5			
6			
7	Warehouse		
8			
9			
10			

EXAMPLE
1 Church
2 Residence

X Indicates location of equipment.

North Carolina Department of Natural Resources & Community Development
James B. Hunt, Jr., Governor
Howard N. Lee, Secretary
DIVISION OF ENVIRONMENTAL MANAGEMENT

May 28, 1981

Mr. D.B. Barker
Major General, U.S. Marine Corps
Commanding
Marine Corps Base
Camp Lejeune, North Carolina 28542

Subject: Permit No. 4641
Marine Corps Base
Camp Lejeune, North Carolina

Dear General Barker:

In accordance with your application received May 1, 1986, we are forwarding herewith Permit No. 4641 to Marine Corps Base, Camp Lejeune, North Carolina for the construction and/or operation of air pollution abatement facilities and/or emission sources.

If any parts, requirements, or limitations contained in this permit are unacceptable to you, you have the right to an adjudicatory hearing before a hearing officer upon written demand to the Director within thirty (30) days following receipt of this permit, identifying the specific issues to be contended. Unless such demand is made, this permit shall be final and binding.

This permit shall be effective from the date of issuance until April 1, 1986, is nontransferable to future owners and operators, and shall be subject to the conditions and limitations as specified therein.

For Federal PSD increment tracking purposes, changes to the facility have consumed a maximum of 9.91 lb/hr of particulate and 71.53 lb/hr of SO_2.

Sincerely,

Charles Wakild
Regional Supervisor

Enclosure

cc: Stan Taylor
Robert Jamieson
Wilmington Regional Office
Central Files

UNITED STATES MARINE CORPS
Marine Corps Base
Camp Lejeune, North Carolina 28542

FAC:RCP:mkc
6280
4 Jun 1981

From: Commanding General
To: Base Maintenance Officer
Via: Staff Judge Advocate

Subj: Permit No. 4641 for the construction and/or operation of air pollution abatement facilities and/or emission sources

Encl: (1) Regional Supervisor, N. C. Dept of Natural Resources and Community Development ltr of 28 May 1981 w/encl

1. Enclosure (1) is forwarded for appropriate action.

K. P. MILLICE, Jr.
By direction

UNITED STATES MARINE CORPS
Marine Corps Base
Camp Lejeune, North Carolina 28542

FAC:RCP:mkc
6280
4 Jun 1981

From: Commanding General
To: Base Maintenance Officer
Via: Staff Judge Advocate

Subj: Permit No. 4641 for the construction and/or operation of air pollution abatement facilities and/or emission sources

Encl: (1) Regional Supervisor, N. C. Dept of Natural Resources and Community Development ltr of 28 May 1981 w/encl

1. Enclosure (1) is forwarded for appropriate action.

K. P. MILLICE, Jr.
By direction

NORTH CAROLINA

ENVIRONMENTAL MANAGEMENT COMMISSION

DEPARTMENT OF NATURAL RESOURCES AND COMMUNITY DEVELOPMENT

Raleigh

P E R M I T

For the Discharge of Air Contaminants Into the Atmosphere

In accordance with the provisions of Article 21B of Chapter 143, General Statutes of North Carolina as amended, and other applicable Laws, Rules and Regulations,

PERMISSION IS HEREBY GRANTED TO

Marine Corps Base
Camp Lejeune, North Carolina

FOR THE

construction and operation of a No. 6 oil-fired boiler (#54) (maximum heat input of 24,200,000 BTU per hour) and for the operation of two No. 6 oil-fired boilers (17,800,000 BTU per hour heat input and 11,000,000 BTU per hour heat input respectively) and for the discharge of the associated stack gases at its facility located at Peach Street, Courthouse Bay, Camp Lejeune, North Carolina, Onslow County,

in accordance with the application received May 1, 1981, and in conformity with the plans, specifications, and other supporting data, all of which are filed with the Department of Natural Resources and Community Development and are incorporated as part of this Permit.

This Permit shall be effective from the date of its issuance until April 1, 1986, is nontransferable to future owners and operators, and shall be subject to the following specified conditions and limitations:

1. This permit shall become voidable unless the No. 6 oil-fired boiler (#54) is constructed in accordance with the approved plans, specifications, and other supporting data and placed in operation on or before September 1, 1981, or as this date may be amended.

2. The facilities shall be properly operated and maintained at all times in such a manner as to effect an overall reduction in air pollution in keeping with the application and otherwise to reduce air contamination to the extent necessary to comply with applicable Environmental Management Commission Regulations, including 15 NCAC 2D .0503, .0516, and .0521, and in no case shall the sulfur dioxide emissions from the boilers exceed 2.3 pounds per million BTU input.

3. Reports on the operation and maintenance of the facilities shall be submitted to the Division of Environmental Management at such intervals and in such form and detail as may be required by the Division. Information required in such reports may include, but is not limited to, process weight rates, firing rates, hours of operation, and preventive maintenance schedules.

4. Camp Lejeune Marine Base, at least ninety (90) days prior to the expiration of this Permit, shall request its extension by letter. The letter should include the permit number and a description of modifications, if any, that have been made.

5. This permit is subject to revocation or modification upon a determination that information contained in the application or presented in support thereof is incorrect, conditions under which the permit renewal was granted have changed, or violations of conditions contained in the permit have occurred.

6. A violation of any term or condition of this Permit shall subject the Permittee to enforcement procedures contained in North Carolina General Statutes 143-215.114, including assessment of civil penalties.

Permit issued this the 28th day of May

NORTH CAROLINA ENVIRONMENTAL MANAGEMENT COMMISSION

Chas. Wakild

Charles Wakild, Regional Supervisor
Division of Environmental Management
By Authority of the Environmental Management Commission

BOILER #53

NORTH CAROLINA

ENVIRONMENTAL MANAGEMENT COMMISSION

RALEIGH

APPLICATION FOR

A "PERMIT"

TO CONSTRUCT AND OPERATE AIR

POLLUTION ABATEMENT FACILITIES AND/OR EMISSION SOURCES

Filed By: Major General D. B. Barker
(Name)

Marine Corps Base
(Address)

Camp Lejeune, North Carolina

AQ-22

APPLICATION INSTRUCTIONS

THIS APPLICATION IS SUBJECT TO REJECTION UNLESS ALL REQUIRED INFORMATION IS SUBMITTED

1. ATTACH DETAILED ENGINEERING DRAWINGS OF SOURCE(S), PROCESS(ES) AND COLLECTION DEVICE(S) AS REQUESTED IN EACH SECTION. IF MULTIPLE SOURCES OR DEVICES, USE ADDENDUM SHEETS AS NECESSARY.

2. Submit application, detailed engineering drawings, specifications and other supporting data and documents in TRIPLICATE.

3. Attach additional sheets as necessary to complete any portion of the application.

4. The application MUST BE SIGNED by the RESPONSIBLE INDIVIDUAL of the company that is to PURCHASE AND OPERATE the facilities for which a Permit is applied.

5. ALL APPLICANTS MUST COMPLETE THE FIRST PAGE AND SECTIONS I AND VI.

6. If an Incinerator, Fuel Burning Source, Wet Collection Device or Dry Collection Device is to be installed and operated, COMPLETE SECTIONS II, III, IV or V respectively.

7. All applications should be mailed to: ENVIRONMENTAL MANAGEMENT COMMISSION
AIR QUALITY SECTION
P. O. Box 27687
Raleigh, North Carolina 27611

APPLICATION FOR A "PERMIT"
To Construct and Operate Air Pollution Abatement Facilities and/or Emission Sources
Three Copies to be Submitted
Fourth Copy Should be Retained by Applicant

Date: 24 Sep 1980

In accordance with the provisions of Article 21 of Chapter 143, General Statutes of North Carolina as amended, application is hereby made by Marine Corps Base, Camp Lejeune, North Carolina
(Name of Company, Establishment, Town, Etc.) (Include Division or Plant Name in Addition to Parent Company if Applicable) in the County of Onslow at Jacksonville, North Carolina
(Street and City or Town Address of Plant or Facility)
for issuance of a "Permit" to construct and operate air pollution abatement facilities and/or emissions sources at above location as specified in the accompanying drawings, specifications, and other pertinent data:

1. Nature of Operation Conducted at the Above Facility: Military Operation

2. Description of Process(es) Whose Emission(s) is/are to be Controlled by the Facility or Source(s) Which is/are to be Constructed or Altered. (Complete Section I)
Boiler, No. 6 Fuel Oil

3. Furnish Type and Narrative Description of Proposed Control Device(s).(Complete Appropriate Supplemental Data Sheets for Control Device to be Installed and/or Operated. Include Make and Model Number of Control Device(s) and Number of Identical Units).
No. 6 Oil Fired, no control device. Boiler No. 53
Bldg No. BB-9

4.

Contaminant Emitted:	Weight Rate of Emissions (lb/hr): Without Control Device	With Control Device	Control Efficiency (%): Without Control Device	With Control Device
SO_x and Particulate	42.42 lb/hr	N/A	N/A	N/A

5. Name and Address of Engineering Firm that Prepared Plans:

6. Ultimate Disposition of Collected Pollutants:
None

7. Date on Which Facilities are to be Completed and in Operation:
October, 1980

8. Indicate Period of Time for Which Facilities are Estimated to be Adequate: 20 Years

9. Estimate Cost of Air Pollution Control Device $ 0

10. Hours Facility is Operated Per Year: 8,760

Name: Major General D. B. Barker, USMC
(Responsible Individual of Company Purchasing/Operating Facility...PLEASE PRINT)

Mailing Address: Marine Corps Base
Camp Lejeune
North Carolina 28542

Signature and Title: DB Barker
D. B. BARKER, Major General, USMC
Commanding General

Telephone Number: 451-5024

AQ-22

I. GENERAL DATA FOR PROCESSES

Attach detailed process engineering drawings, equipment drawings and flow diagrams for the process(es) or source(s) being constructed or altered.

Name of Process: Heating and Steam Plant

Total Weight of Materials Entering this Process: 121 gals/hr ~~xxxxxxx~~

Volume and Temperature of Air Flow Entering Control Device: _____ CFM @ _____ °F

Volume and Temperature of Effluent at Discharge Point to Atmosphere: _____ CFM @ _____ °F

Pollutant(s) to be Controlled: _____

Height of Process Stack or Vent Above Ground Level 27'10" ft. Inside area of Stack 3.14 ft^2.

Particulate Emission Rate (Before Control) 2.98 lb/hr

Particle Size Distribution: 0-5μ____%, 5-10μ____%, 10-20μ____%, 20-30μ____%, 30-40μ____%, 40-50μ____%, >50μ____%

Gaseous Emission(s): Name (Chemical Formula)	μg/m³, PPM	or lb/hr
SOx		39.44

II. SUPPLEMENTARY DATA FOR INCINERATORS (Including Conical Incinerators)

Circle Type of Waste or Indicate Composition: Type 0 Type I Type II Type III Type IV

Combustible: ____% Non-Combustible: ____% Moisture: ____% Heat Value: ____BTU/lb

Total Waste Generated Per Day: _____ lb. Hours Incinerator will be Operated: _____ hrs/day

Design Capacity for Above Waste: _____ lbs/hr Manufacturer and Model Number; Approximate Cost: _____

Primary Chamber Volume: _____ $ft.^3$ Secondary Chamber Volume: _____ $ft.^3$

Air Requirements: Total Excess Air ____% Draft: Natural ____ Induced ____ Other ____

Overfire Air: ____cfm Underfire Air: ____cfm

Is there an Electronically Controlled, Exhaust Gas Temperature Modulated, Damper Installed on the Conical Incinerator for: Overfire Air Supply____, Underfire Air Supply____, Dome____ Temperature Set Point____°F

Flame Port Temperature: _____ °F Secondary Chamber Temperature: _____ °F

Is there a Continuous Exhaust Gas Temperature Recorder? Yes____ No____

Stack:
Inside Area ____$ft.^2$ Height ____ft. Gas Velocity ____ft/sec Temperature ____°F Fan Capacity ____cfm Stack Lined? _____

Is there a Wet Scrubber?

Yes ____ No ____ Flow Rate of H_2O into Scrubber ____gal/min Temperature Before Scrubber ____°F

Aux. Fuel: Oil _____ Gas _____ Other _____ Burner Rating: Primary Chamber _____BTU/hr Secondary Chamber _____BTU/hr Stack _____BTU/hr

Primary Burner: Is there a Preheat Timer? Yes ____ No ____ Preheating Time: _____min.

Secondary Burner or Afterburner: Is there a Timer? Yes ____ No ____ Length of Time Burner is Operated _____min.

Is the Timer Reset by Charging Door? Yes ____ No ____ Other Mode of Burner Control _____

Type of Feed: Manual _____ Automatic _____ If Automatic, Describe _____

Distance from Incinerator to Nearest Structure(s) in which People Live and/or Work.____ft.

Signature: _____ Title: _____

III. SUPPLEMENTARY DATA FOR FUEL BURNING SOURCES

Attach detailed dimensioned drawing or sketch showing internal features of dryers, wood or coal fired boilers, and recovery boilers.

Type of Fuel Burning Source Boiler Stack Height Above Ground Level 27'10" ft. Inside Area of Stack 3.14 ft^2

Make and Model Number Nebraska Ser. No.2D 1801 Volume of Furnace ____ ft^3

Specify Actual Amount of Each Fuel Used in Above Source (s):

Coal ____ lb/hr; Oil Grade 6 Amount 121 gal/hr, at 146,900 BTU/gal and ____ lb/gal or ____ lb/hr

Wood ____ lb/hr; Natural Gas ____ SCF/hr, at ____ BTU/SCF; Other ____

(Specify type, amount and heating value)

Specify Maximum Rating for Each Fuel Burning Source:

Coal ____ Oil 128.4 Wood ____ Natural Gas ____ Other ____

Maximum Sulfur Content of Fuel 2.05 % Specify Standby Fuel None Maximum % Sulfur ____

Type of Solid Fuel Burning Equipment Used: Hand Fired ___ Spreader Stoker ___ Underfeed Stoker ___ Chain Grate ___

Traveling Grate ___ Pulverizer ___ Cyclone Furnace ___ Other (Specify) ____

Ash Content of Fuel: Specify Method and Schedule of Tube Cleaning, if Applicable:

Coal ____ % Wood ____ % Other ____ % Lancing ____ Tube Blowing ____ Schedule ____

Emission Control Equipment (Describe in Detail in Sections IV and V)

Collection Device: Wet ___ Dry ___ Steam Injection ___ Air Injection ___ Is Collected Flyash Reinjected? ____

Draft on Boiler (Natural ____ Induced X) ____ cfm at ____ °F

Total Number of Fuel Burning Sources Within Property Boundaries: 3

Maximum Capacity Rating, by Type, for All Fuel Burning Units Excluding that Itemized Above: (Total Like Units) 2

Coal ____ lb/hr Wood ____ lb/hr Oil 149 gal/hr Natural Gas ____ SCF/hr

IV. SUPPLEMENTARY DATA FOR WET COLLECTION DEVICES

Attach detailed engineering drawings of the control device and particle size versus removal efficiency curves.

Liquid Scrubbing Medium and Additives: ____

Total Liquid Injection Rate (Include Recirculated and Make-up Rates) ____ gal/min or gal/1000 ft^3

Operating Pressure Drop Across Device ____ in H_2O

ANSWER FOLLOWING QUESTIONS FOR SPECIFIC DEVICE:

VENTURI SCURBBER: Inlet Area ____ in^2 Throat Area ____ in^2 Throat Velocity ____ ft/sec

GRAVITY SPRAY CHAMBER: Number of Nozzles ____ Liquid Droplet Size ____ u Co-Current ____ Countercurrent ____

WET CYCLONE:

Body Diameter ____ in Length ____ in

Inlet Area ____ in^2 Number of Nozzles ____

Outlet Area ____ in^2

PACKED TOWER OR PLATE TOWER:

Cross-Sectional Area ____ ft^2 Type of Plate ____

Length ____ ft Depth of Packing ____ ft

Number of Plates ____ Type of Packing ____

OTHER WET COLLECTION DEVICES: GIVE COMPLETE DESCRIPTION INCLUDING DESIGN PARAMETERS AND DETAILED ENGINEERING DRAWINGS.

Signature: ____ Title: ____

V. SUPPLEMENTARY DATA FOR DRY COLLECTION DEVICES

Attach detailed engineering drawings of the control device and particle size versus removal efficiency curves.

BAGHOUSES: Cloth Area _____ ft^2

Bag Material _____

Number of Compartments _____

Pressure - Drop Total _____ in H_2O

Method of Cleaning _____

Air-to-Cloth Ratio _____ ft/min

Time Between Cleaning _____ mins, hrs

ELECTROSTATIC PRECIPITATORS:

GENERAL:

Effective Area of Grounded Collector Plates _____ ft^2

Number of Compartments or Chambers _____ Number of Cells per Compartment _____

Electrical Field Gradient at the Discharge or Emitting Electrodes _____ KV/in

Average Electrical Field Gradient at the the Grounded Collecting Electrodes _____ KV/in

Fields of Treatment _____ Potential Applied to Emitting Wires _____ KV

SINGLE STAGE TYPE:

Distance Between Emitting Wires and Collecting Plates _____ in.

Number of Isolatable Bus Sections _____ Corona Power _____ Watts/1000 cfm

TWO STAGE TYPE:

Distance Between First Stage Emitting Electrodes and Field Receiver Electrodes (Ground) _____ in

Potential Applied to Second Stage Emitting Plates _____ KV

Distance Between Second Stage Emitting Plates and Grounded Collection Plates _____ in

CYCLONES/MULTICYCLONES:

Simple Cyclone

Diameter _____ in

Inlet Dimensions _____

Outlet Dimensions _____

Pressure Drop _____ in H_2O

Number of Cyclones _____

Multicyclone

Diameter _____ in

Inlet Dimensions of Individual Cyclone _____

Outlet Dimensions of Individual Cyclone _____

Pressure Drop _____ in H_2O

Number of Cyclones _____

OTHER DRY COLLECTION DEVICES: GIVE COMPLETE DETAILED ENGINEERING DESCRIPTION AND DRAWINGS.

Signature: _____ Title: _____

Boiler 53

VI. AREA DIAGRAM

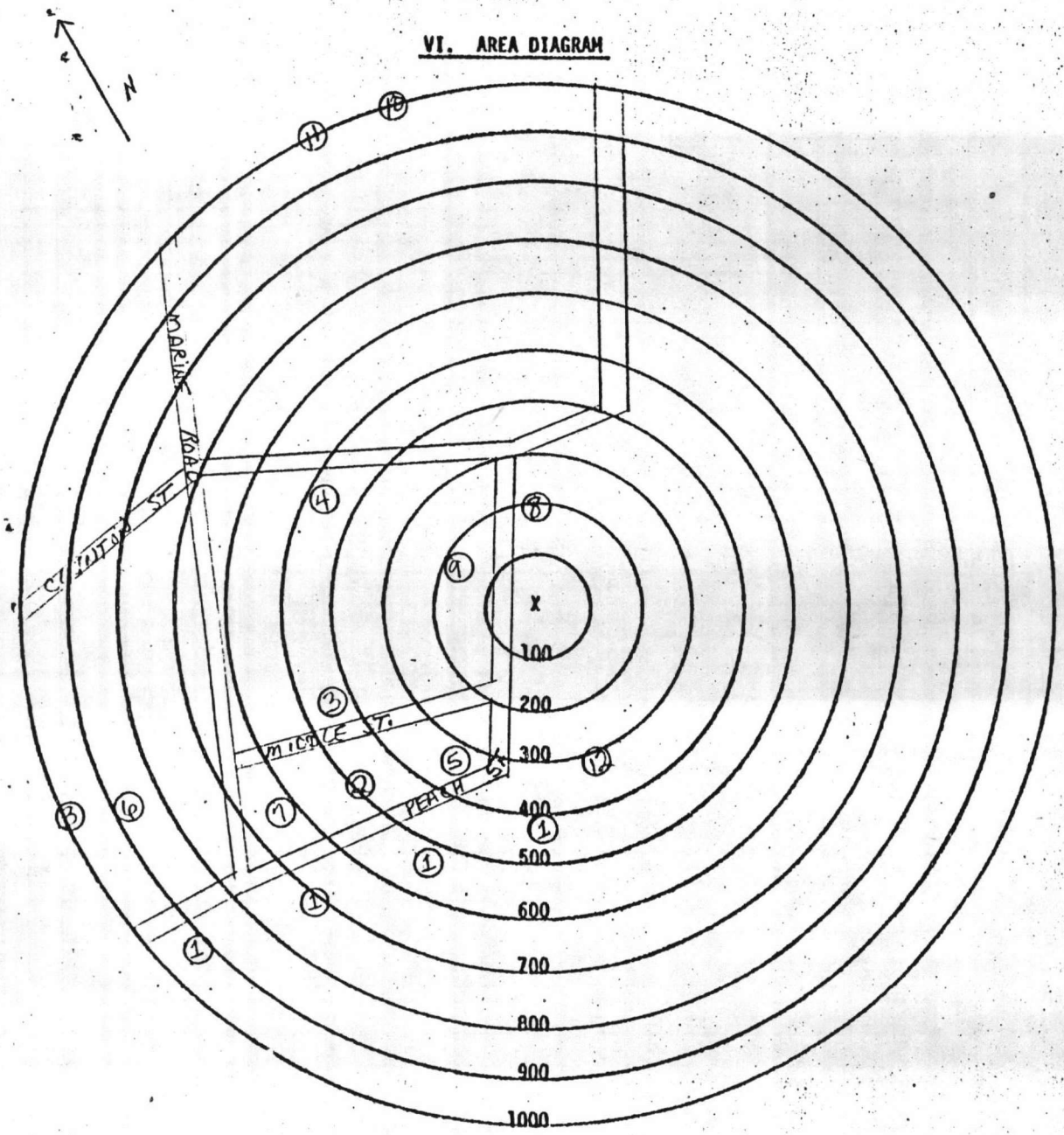

Owner Marine Corps Base, Camp Lejeune, N.C.

Location Peach Street, Courthouse Bay
(Give Street Address)

INSTRUCTIONS:

1. Show all surrounding buildings and roads within 1000 feet of subject equipment which is located at center of circles.
2. Indicate location and type of building by the use of small numbered circles with the description below.
3. Show roads as lines representing the road edges. Indicate street names and highway numbers.
4. Show wooded or cleared areas by approximate boundary lines and the words "woods", "cleared", "cornfield", etc.
5. Indicate direction of north by arrow.

CODE	DESCRIPTION
1	Barracks
2	Mess Hall
3	Administration
4	Theater
5	Fire Station
6	Telephone Exchange
7	Warehouse
8	Chaplin's Office
9	Marine Corps Exchange
10	Water Reservoir
11	Water Treatment Plant
EXAMPLE	1 Church
	2 Residence
12	Sewage Lift Station

X Indicates location of equipment.

NORTH CAROLINA

ENVIRONMENTAL MANAGEMENT COMMISSION

RALEIGH

APPLICATION FOR

A "PERMIT"

TO CONSTRUCT AND OPERATE AIR

POLLUTION ABATEMENT FACILITIES AND/OR EMISSION SOURCES

Filed By: Major General D. B. Barker
(Name)

Marine Corps Base
(Address)

Camp Lejeune, N. C. 28542

AQ-22

APPLICATION INSTRUCTIONS

THIS APPLICATION IS SUBJECT TO REJECTION UNLESS ALL REQUIRED

INFORMATION IS SUBMITTED

1. ATTACH DETAILED ENGINEERING DRAWINGS OF SOURCE(S), PROCESS(ES) AND COLLECTION DEVICE(S) AS REQUESTED IN EACH SECTION. IF MULTIPLE SOURCES OR DEVICES, USE ADDENDUM SHEETS AS NECESSARY.

2. Submit application, detailed engineering drawings, specifications and other supporting data and documents in TRIPLICATE.

3. Attach additional sheets as necessary to complete any portion of the application.

4. The application MUST BE SIGNED by the RESPONSIBLE INDIVIDUAL of the company that is to PURCHASE AND OPERATE the facilities for which a Permit is applied.

5. ALL APPLICANTS MUST COMPLETE THE FIRST PAGE AND SECTIONS I AND VI.

6. If an Incinerator, Fuel Burning Source, Wet Collection Device or Dry Collection Device is to be installed and operated, COMPLETE SECTIONS II, III, IV or V respectively.

7. All applications should be mailed to: ENVIRONMENTAL MANAGEMENT COMMISSION
AIR QUALITY SECTION
P. O. Box 27687
Raleigh, North Carolina 27611

APPLICATION FOR A "PERMIT"
To Construct and Operate Air Pollution Abatement Facilities and/or Emission Sources
Three Copies to be Submitted
Fourth Copy Should be Retained by Applicant

Date: 7 April 1981

In accordance with the provisions of Article 21 of Chapter 143, General Statutes of North Carolina as amended, application is hereby made by U. S. Marine Corps
(Name of Company, Establishment, Town, Etc.) (Include Division or Plant Name in Addition to Parent Company if Applicable)
in the County of Onslow at Camp Lejeune, N. C.
(Street and City or Town Address of Plant or Facility)
for issuance of a "Permit" to construct and operate air pollution abatement facilities and/or emissions sources at above location as specified in the accompanying drawings, specifications, and other pertinent data:

1. Nature of Operation Conducted at the Above Facility: Military Operation

2. Description of Process(es) Whose Emission(s) is/are to be Controlled by the Facility or Source(s) Which is/are to be Constructed or Altered. (Complete Section I)
Steam Boiler, No. 54, Building BB-9; No. 6 Oil Fired.

3. Furnish Type and Narrative Description of Proposed Control Device(s). (Complete Appropriate Supplemental Data Sheets for Control Device to be Installed and/or Operated. Include Make and Model Number of Control Device(s) and Number of Identical Units).
No Control Device

4.

Contaminant Emitted:	Weight Rate of Emissions (lb/hr): Without Control Device	With Control Device	Control Efficiency (%): Without Control Device	With Control Device
SO_x and Particulates	57.83	N/A	N/A	N/A

5. Name and Address of Engineering Firm that Prepared Plans: Public Works Department
MCB, Camp Lejeune, N. C. 28542

6. Ultimate Disposition of Collected Pollutants:
N/A

7. Date on Which Facilities are to be Completed and in Operation:
1 September, 19 81

8. Indicate Period of Time for Which Facilities are Estimated to be Adequate: ____ Years

9. Estimate Cost of Air Pollution Control Device $ 0

10. Hours Facility is Operated Per Year: 8,760

Name: Major General D. B. Barker
(Responsible Individual of Company Purchasing/Operating Facility...PLEASE PRINT)

Mailing Address: Marine Corps Base
Camp Lejeune
North Carolina 28542

Signature and Title: D B Barker
D. B. BARKER, MAJOR GENERAL
Commanding General

Telephone Number: 451-5024

AQ-22

I. GENERAL DATA FOR PROCESSES

Attach detailed process engineering drawings, equipment drawings and flow diagrams for the process(es) or source(s) being constructed or altered.

Name of Process: Heating Plant

Total Weight of Materials Entering this Process: 165 gal/hr ~~lb/hr or ton/hr~~

Volume and Temperature of Air Flow Entering Control Device: _____ CFM @ _____ °F

Volume and Temperature of Effluent at Discharge Point to Atmosphere: _____ CFM @ 500 °F

Pollutant(s) to be Controlled: _____

Height of Process Stack or Vent Above Ground Level 29 ft. Inside area of Stack 3.14 ft^2.

Particulate Emission Rate (Before Control) 4.05 lb/hr

Particle Size Distribution: 0-5μ____%, 5-10μ____%, 10-20μ____%, 20-30μ____%, 30-40μ____%, 40-50μ____%, >50μ____%

Gaseous Emission(s): Name (Chemical Formula)	$\mu g/m^3$, PPM	or lb/hr
SO_x		53.78

II. SUPPLEMENTARY DATA FOR INCINERATORS (Including Conical Incinerators)

Circle Type of Waste or Indicate Composition: Type 0 Type I Type II Type III Type IV

Combustible: ____% Non-Combustible: ____% Moisture: ____% Heat Value: ____BTU/lb

Total Waste Generated Per Day: ____ lb. Hours Incinerator will be Operated: ____ hrs/day

Design Capacity for Above Waste: ____ lbs/hr Manufacturer and Model Number; Approximate Cost: _____

Primary Chamber Volume: ____ $ft.^3$ Secondary Chamber Volume: ____ $ft.^3$

Air Requirements: Total Excess Air ____% Draft: Natural ____ Induced ____ Other ____

Overfire Air: ____cfm Underfire Air: ____cfm

Is there an Electronically Controlled, Exhaust Gas Temperature Modulated, Damper Installed on the Conical Incinerator for: Overfire Air Supply____, Underfire Air Supply____, Dome____Temperature Set Point____°F

Flame Port Temperature: ____ °F Secondary Chamber Temperature: ____ °F

Is there a Continuous Exhaust Gas Temperature Recorder? Yes____ No____

Stack:
Inside Area ____$ft.^2$ Height ____ft. Gas Velocity ____ft/sec Temperature ____°F Fan Capacity ____cfm Stack Lined? ____

Is there a Wet Scrubber?

Yes ____ No ____ Flow Rate of H_2O into Scrubber ____gal/min Temperature Before Scrubber ____°F

Aux. Fuel: Oil ____ Gas ____ Other ____ Burner Rating: Primary Chamber ____BTU/hr Secondary Chamber ____BTU/hr Stack ____BTU/hr

Primary Burner: Is there a Preheat Timer? Yes ____ No ____ Preheating Time: ____min.

Secondary Burner or Afterburner: Is there a Timer? Yes ____ No ____ Length of Time Burner is Operated ____min.

Is the Timer Reset by Charging Door? Yes ____ No ____ Other Mode of Burner Control ____

Type of Feed: Manual ____ Automatic ____ If Automatic, Describe _____

Distance from Incinerator to Nearest Structure(s) in which People Live and/or Work.____ft.

Signature: _____ Title: _____

*Attach detailed dimensioned dra[illegible] or sketch showing internal features of dr[illegible]s, wood or coal fired boilers, and recovery boilers.

Type of Fuel Burning Source Boiler Stack Height Above Ground Level 29 ft. Inside Area of Stack 3.14 ft^2

Make and Model Number Nebraska Model NS-B-31 Volume of Furnace 480 ft^3

Specify Actual Amount of Each Fuel Used in Above Source (s):

Coal ____ lb/hr; Oil Grade 6 Amount 165 gal/hr, at 146,900 BTU/gal and ____ lb/gal or ____ lb/hr

Wood ____ lb/hr; Natural Gas ____ SCF/hr, at ____ BTU/SCF; Other _____

(Specify type, amount and heating value)

Specify Maximum Rating for Each Fuel Burning Source:

Coal ____ Oil 165 Wood ____ Natural Gas ____ Other _____

Maximum Sulfur Content of Fuel 2.05 % Specify Standby Fuel None Maximum % Sulfur ____

Type of Solid Fuel Burning Equipment Used: Hand Fired ___ Spreader Stoker ___ Underfeed Stoker ___ Chain Grate ___

Traveling Grate ___ Pulverizer ___ Cyclone Furnace ___ Other (Specify) _____

Ash Content of Fuel: Specify Method and Schedule of Tube Cleaning, if Applicable:

Coal ____ % Wood ____ % Other ____ % Lancing _____ Tube Blowing _____ Schedule _____

Emission Control Equipment (Describe in Detail in Sections IV and V)

Collection Device: Wet ____ Dry ____ Steam Injection ____ Air Injection ____ Is Collected Flyash Reinjected? ____

Draft on Boiler (Natural ____ Induced X) ____ cfm at ____ °F

Total Number of Fuel Burning Sources Within Property Boundaries: 3

Maximum Capacity Rating, by Type, for All Fuel Burning Units Excluding that Itemized Above: (Total Like Units) 2

Coal ____ lb/hr Wood ____ lb/hr Oil 196 gal/hr Natural Gas ____ SCF/hr

IV. SUPPLEMENTARY DATA FOR WET COLLECTION DEVICES

Attach detailed engineering drawings of the control device and particle size versus removal efficiency curves.

Liquid Scrubbing Medium and Additives: _____

Total Liquid Injection Rate (Include Recirculated and Make-up Rates) ____ gal/min or gal/1000 ft^3

Operating Pressure Drop Across Device ____ in H_2O

ANSWER FOLLOWING QUESTIONS FOR SPECIFIC DEVICE:

VENTURI SCRUBBER: Inlet Area ____ in^2 Throat Area ____ in^2 Throat Velocity ____ ft/sec

GRAVITY SPRAY CHAMBER: Number of Nozzles ____ Liquid Droplet Size ____ u Co-Current ____ Countercurrent ____

WET CYCLONE:

Body Diameter ____ in Length _____ in

Inlet Area _____ in^2 Number of Nozzles _____

Outlet Area _____ in^2

PACKED TOWER OR PLATE TOWER:

Cross-Sectional Area _____ ft^2 Type of Plate _____

Length _____ ft Depth of Packing _____ ft

Number of Plates _____ Type of Packing _____

OTHER WET COLLECTION DEVICES: GIVE COMPLETE DESCRIPTION INCLUDING DESIGN PARAMETERS AND DETAILED ENGINEERING DRAWINGS.

Signature: _____ Title: _____

V. SUPPLEMENTARY DATA FOR DRY COLLECTION DEVICES

Attach detailed engineering drawings of the control device and particle size versus removal efficiency curves.

BAGHOUSES: Cloth Area _____ ft^2 Bag Material _____

Number of Compartments _____ Pressure - Drop Total _____ in H_2O

Method of Cleaning _____ Air-to-Cloth Ratio _____ ft/min

Time Between Cleaning _____ mins, hrs

ELECTROSTATIC PRECIPITATORS:

GENERAL:

Effective Area of Grounded Collector Plates _____ ft^2

Number of Compartments or Chambers _____ Number of Cells per Compartment _____

Electrical Field Gradient at the Discharge or Emitting Electrodes _____ KV/in

Average Electrical Field Gradient at the the Grounded Collecting Electrodes _____ KV/in

Fields of Treatment _____ Potential Applied to Emitting Wires _____ KV

SINGLE STAGE TYPE:

Distance Between Emitting Wires and Collecting Plates _____ in.

Number of Isolatable Bus Sections _____ Corona Power _____ Watts/1000 cfm

TWO STAGE TYPE:

Distance Between First Stage Emitting Electrodes and Field Receiver Electrodes (Ground) _____ in

Potential Applied to Second Stage Emitting Plates _____ KV

Distance Between Second Stage Emitting Plates and Grounded Collection Plates _____ in

CYCLONES/MULTICYCLONES:

Simple Cyclone

Diameter _____ in

Inlet Dimensions _____

Outlet Dimensions _____

Pressure Drop _____ in H_2O

Number of Cyclones _____

Multicyclone

Diameter _____ in

Inlet Dimensions of Individual Cyclone _____

Outlet Dimensions of Individual Cyclone _____

Pressure Drop _____ in H_2O

Number of Cyclones _____

OTHER DRY COLLECTION DEVICES: GIVE COMPLETE DETAILED ENGINEERING DESCRIPTION AND DRAWINGS.

Signature: _____ Title: _____

VI. AREA DIAGRAM

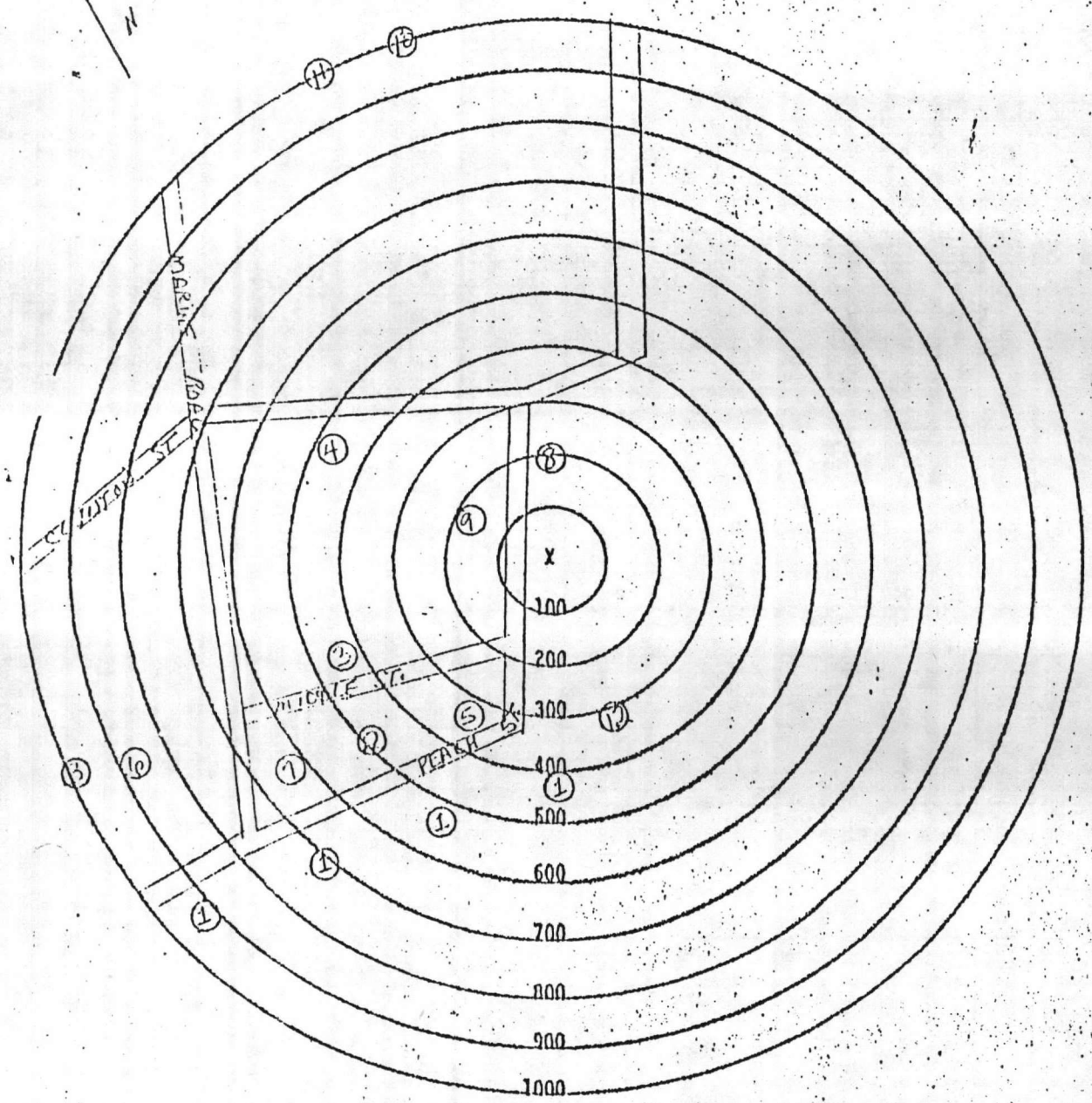

Owner Marine Corps Base, Camp Lejeune, N.C.

Location Peach Street, Courthouse Bay
(Give Street Address)

INSTRUCTIONS:

1. Show all surrounding buildings and roads within 1000 feet of subject equipment which is located at center of circles.
2. Indicate location and type of building by the use of small numbered circles with the description below.
3. Show roads as lines representing the road edges. Indicate street names and highway numbers.
4. Show wooded or cleared areas by approximate boundary lines and the words "woods", "cleared", "cornfield", etc.
5. Indicate direction of north by arrow.

CODE	DESCRIPTION
1	Barracks
2	Mess Hall
3	Administration
4	Theater
5	Fire Station
6	Telephone Exchange
7	Warehouse
8	Chaplin's Office
9	Marine Corps Exchange
10	Water Reservoir
11	Water Treatment Plant
EXAMPLE	1 Church
	2 Residence
12	Sewage Lift Station

X Indicates location of equipment.

Boiler #55

NORTH CAROLINA

ENVIRONMENTAL MANAGEMENT COMMISSION

RALEIGH

APPLICATION FOR

A "PERMIT"

TO CONSTRUCT AND OPERATE AIR

POLLUTION ABATEMENT FACILITIES AND/OR EMISSION SOURCES

Filed By: Major General D. B. Barker
(Name)

Marine Corps Base
(Address)

Camp Lejeune, North Carolina

AQ-22

APPLICATION INSTRUCTIONS

THIS APPLICATION IS SUBJECT TO REJECTION UNLESS ALL REQUIRED INFORMATION IS SUBMITTED

1. ATTACH DETAILED ENGINEERING DRAWINGS OF SOURCE(S), PROCESS(ES) AND COLLECTION DEVICE(S) AS REQUESTED IN EACH SECTION. IF MULTIPLE SOURCES OR DEVICES, USE ADDENDUM SHEETS AS NECESSARY.

2. Submit application, detailed engineering drawings, specifications and other supporting data and documents in TRIPLICATE.

3. Attach additional sheets as necessary to complete any portion of the application.

4. The application MUST BE SIGNED by the RESPONSIBLE INDIVIDUAL of the company that is to PURCHASE AND OPERATE the facilities for which a Permit is applied.

5. ALL APPLICANTS MUST COMPLETE THE FIRST PAGE AND SECTIONS I AND VI.

6. If an Incinerator, Fuel Burning Source, Wet Collection Device or Dry Collection Device is to be installed and operated, COMPLETE SECTIONS II, III, IV or V respectively.

7. All applications should be mailed to: ENVIRONMENTAL MANAGEMENT COMMISSION
AIR QUALITY SECTION
P. O. Box 27687
Raleigh, North Carolina 27611

APPLICATION FOR A "PERMIT"
To Construct and Operate Air Pollution Abatement Facilities and/or Emission Sources
Three Copies to be Submitted
Fourth Copy Should be Retained by Applicant

Date: 24 September 1980

In accordance with the provisions of Article 21 of Chapter 143, General Statutes of North Carolina as amended, application is hereby made by Marine Corps Base, Camp Lejeune, North Carolina
(Name of Company, Establishment, Town, Etc.) (Include Division or Plant Name in Addition to Parent Company if Applicable) in the County of Onslow at Jacksonville, North Carolina
(Street and City or Town Address of Plant or Facility)
for issuance of a "Permit" to construct and operate air pollution abatement facilities and/or emissions sources at above location as specified in the accompanying drawings, specifications, and other pertinent data:

1. Nature of Operation Conducted at the Above Facility: Military Operation

2. Description of Process(es) Whose Emission(s) is/are to be Controlled by the Facility or Source(s) Which is/are to be Constructed or Altered. (Complete Section I)
Boiler, No. 6 Fuel Oil — Boiler No. 55, Bldg No. BB-9

3. Furnish Type and Narrative Description of Proposed Control Device(s).(Complete Appropriate Supplemental Data Sheets for Control Device to be Installed and/or Operated. Include Make and Model Number of Control Device(s) and Number of Identical Units).
No. 6 Oil Fired, no control device.

4. Contaminant Emitted:	Weight Rate of Emissions (lb/hr): Without Control Device	With Control Device	Control Efficiency (%): Without Control Device	With Control Device
SO_x and Particulate	26.30 lb/hr	N/A	N/A	N/A

5. Name and Address of Engineering Firm that Prepared Plans:

6. Ultimate Disposition of Collected Pollutants: None

7. Date on Which Facilities are to be Completed and in Operation: October, 19 80

8. Indicate Period of Time for Which Facilities are Estimated to be Adequate: 20 Years

9. Estimate Cost of Air Pollution Control Device $ 0

10. Hours Facility is Operated Per Year: 8,760

Name: Major General D. B. Barker, USMC
(Responsible Individual of Company Purchasing/Operating Facility...PLEASE PRINT)

Mailing Address: Marine Corps Base
Camp Lejeune
North Carolina 28542

Signature and Title: DB Barker
D. B. BARKER, Major General, USMC
Commanding General

Telephone Number: 451-5024

AQ-22

I. GENERAL DATA FOR PROCESSES

Attach detailed process engineering drawings, equipment drawings and flow diagrams for the process(es) or source(s) being constructed or altered.

Name of Process: Heating and Steam Plant

Total Weight of Materials Entering this Process: 75 gals ~~lb~~/hr ~~or kg/hr~~

Volume and Temperature of Air Flow Entering Control Device: _____ CFM @ _____ °F

Volume and Temperature of Effluent at Discharge Point to Atmosphere: _____ CFM @ _____ °F

Pollutant(s) to be Controlled: _____

Height of Process Stack or Vent Above Ground Level 33'7" ft. Inside area of Stack 4.26 ft^2.

Particulate Emission Rate (Before Control) 1.85 lb/hr

Particle Size Distribution: 0-5μ____%, 5-10μ____%, 10-20μ____%, 20-30μ____%, 30-40μ____%, 40-50μ____%, >50μ____%

Gaseous Emission(s): Name (Chemical Formula)	$\mu g/m^3$, PPM	or lb/hr
SO_x		24.45

II. SUPPLEMENTARY DATA FOR INCINERATORS (Including Conical Incinerators)

Circle Type of Waste or Indicate Composition: Type 0 Type I Type II Type III Type IV

Combustible: ____% Non-Combustible: ____% Moisture: ____% Heat Value: ____BTU/lb

Total Waste Generated Per Day: _____ lb. Hours Incinerator will be Operated: _____ hrs/day

Design Capacity for Above Waste: _____ lbs/hr Manufacturer and Model Number; Approximate Cost: _____

Primary Chamber Volume: _____ $ft.^3$ Secondary Chamber Volume: _____ $ft.^3$

Air Requirements: Total Excess Air ____% Draft: Natural ____ Induced ____ Other ____

Overfire Air: ____cfm Underfire Air: ____cfm

Is there an Electronically Controlled, Exhaust Gas Temperature Modulated, Damper Installed on the Conical Incinerator for: Overfire Air Supply____, Underfire Air Supply____, Dome____ Temperature Set Point____°F

Flame Port Temperature: _____ °F Secondary Chamber Temperature: _____ °F

Is there a Continuous Exhaust Gas Temperature Recorder? Yes____ No____

Stack:
Inside Area ____$ft.^2$ Height ____ft. Gas Velocity ____ft/sec Temperature ____°F Fan Capacity ____cfm Stack Lined? _____

Is there a Wet Scrubber?

Yes ____ No ____ Flow Rate of H_2O into Scrubber ____gal/min Temperature Before Scrubber ____°F

Aux. Fuel: Oil _____ Gas _____ Other _____ Burner Rating: Primary Chamber _____ BTU/hr Secondary Chamber _____ BTU/hr Stack _____ BTU/hr

Primary Burner: Is there a Preheat Timer? Yes ____ No ____ Preheating Time: _____ min.

Secondary Burner or Afterburner: Is there a Timer? Yes ____ No ____ Length of Time Burner is Operated _____ min.

Is the Timer Reset by Charging Door? Yes ____ No ____ Other Mode of Burner Control _____

Type of Feed: Manual _____ Automatic _____ If Automatic, Describe _____

Distance from Incinerator to Nearest Structure(s) in which People Live and/or Work. _____ ft.

Signature: _____ Title: _____

*Attach detailed dimensioned d ng or sketch showing internal features of ers, wood or coal fired boilers, and recovery boilers.

Type of Fuel Burning Source Boiler Stack Height Above Ground Level 33'7" ft. Inside Area of Stack 4.26 ft^2

Make and Model Number Erie City Iron Works Model V4 Volume of Furnace ____ ft^3

Specify Actual Amount of Each Fuel Used in Above Source (s):

Coal ____ lb/hr; Oil Grade 6 Amount 75 gal/hr, at 146,900 BTU/gal and ____ lb/gal or ____ lb/hr

Wood ____ lb/hr; Natural Gas ____ SCF/hr, at ____ BTU/SCF; Other _____

(Specify type, amount and heating value)

Specify Maximum Rating for Each Fuel Burning Source:

Coal ____ Oil 75 g/hr Wood ____ Natural Gas ____ Other _____

Maximum Sulfur Content of Fuel 2.05 % Specify Standby Fuel None Maximum % Sulfur ____

Type of Solid Fuel Burning Equipment Used: Hand Fired ___ Spreader Stoker ___ Underfeed Stoker ___ Chain Grate ___

Traveling Grate ___ Pulverizer ___ Cyclone Furnace ___ Other (Specify) _____

Ash Content of Fuel: Specify Method and Schedule of Tube Cleaning, if Applicable:

Coal ____ % Wood ____ % Other ____ % Lancing _____ Tube Blowing _____ Schedule _____

Emission Control Equipment (Describe in Detail in Sections IV and V)

Collection Device: Wet ___ Dry ___ Steam Injection ___ Air Injection ___ Is Collected Flyash Reinjected? ___

Draft on Boiler (Natural ____ Induced X) ____ cfm at ____ °F

Total Number of Fuel Burning Sources Within Property Boundaries: 3

Maximum Capacity Rating, by Type, for All Fuel Burning Units Excluding that Itemized Above: (Total Like Units) 2

Coal ____ lb/hr Wood ____ lb/hr Oil 195 gal/hr Natural Gas ____ SCF/hr

IV. SUPPLEMENTARY DATA FOR WET COLLECTION DEVICES

Attach detailed engineering drawings of the control device and particle size versus removal efficiency curves.

Liquid Scrubbing Medium and Additives: _____

Total Liquid Injection Rate (Include Recirculated and Make-up Rates) ____ gal/min or gal/1000 ft^3

Operating Pressure Drop Across Device ____ in H_2O

ANSWER FOLLOWING QUESTIONS FOR SPECIFIC DEVICE:

VENTURI SCRUBBER: Inlet Area ____ in^2 Throat Area ____ in^2 Throat Velocity ____ ft/sec

GRAVITY SPRAY CHAMBER: Number of Nozzles ____ Liquid Droplet Size ____ u Co-Current ____ Countercurrent ____

WET CYCLONE:

Body Diameter ____ in Length _____ in

Inlet Area _____ in^2 Number of Nozzles _____

Outlet Area _____ in^2

PACKED TOWER OR PLATE TOWER:

Cross-Sectional Area _____ ft^2 Type of Plate _____

Length _____ ft Depth of Packing _____ ft

Number of Plates _____ Type of Packing _____

OTHER WET COLLECTION DEVICES: GIVE COMPLETE DESCRIPTION INCLUDING DESIGN PARAMETERS AND DETAILED ENGINEERING DRAWINGS.

Signature: _____ Title: _____

V. SUPPLEMENTARY DATA FOR DRY COLLECTIC EVICES

*Attach detailed engineering drawings of the control device and particle size versus removal efficiency curves.

BAGHOUSES: Cloth Area _____ ft^2

Number of Compartments _____

Method of Cleaning _____

Time Between Cleaning _____ mins, hrs

Bag Material _____

Pressure - Drop Total _____ in H_2O

Air-to-Cloth Ratio _____ ft/min

ELECTROSTATIC PRECIPITATORS:

GENERAL:

Effective Area of Grounded Collector Plates _____ ft^2

Number of Compartments or Chambers _____ Number of Cells per Compartment _____

Electrical Field Gradient at the Discharge or Emitting Electrodes _____ KV/in

Average Electrical Field Gradient at the the Grounded Collecting Electrodes _____ KV/in

Fields of Treatment _____ Potential Applied to Emitting Wires _____ KV

SINGLE STAGE TYPE:

Distance Between Emitting Wires and Collecting Plates _____ in.

Number of Isolatable Bus Sections _____ Corona Power _____ Watts/1000 cfm

TWO STAGE TYPE:

Distance Between First Stage Emitting Electrodes and Field Receiver Electrodes (Ground) _____ in

Potential Applied to Second Stage Emitting Plates _____ KV

Distance Between Second Stage Emitting Plates and Grounded Collection Plates _____ in

CYCLONES/MULTICYCLONES:

Simple Cyclone

Diameter _____ in

Inlet Dimensions _____

Outlet Dimensions _____

Pressure Drop _____ in H_2O

Number of Cyclones _____

Multicyclone

Diameter _____ in

Inlet Dimensions of Individual Cyclone _____

Outlet Dimensions of Individual Cyclone _____

Pressure Drop _____ in H_2O

Number of Cyclones _____

OTHER DRY COLLECTION DEVICES: GIVE COMPLETE DETAILED ENGINEERING DESCRIPTION AND DRAWINGS.

Signature: _____ Title: _____

VI. AREA DIAGRAM

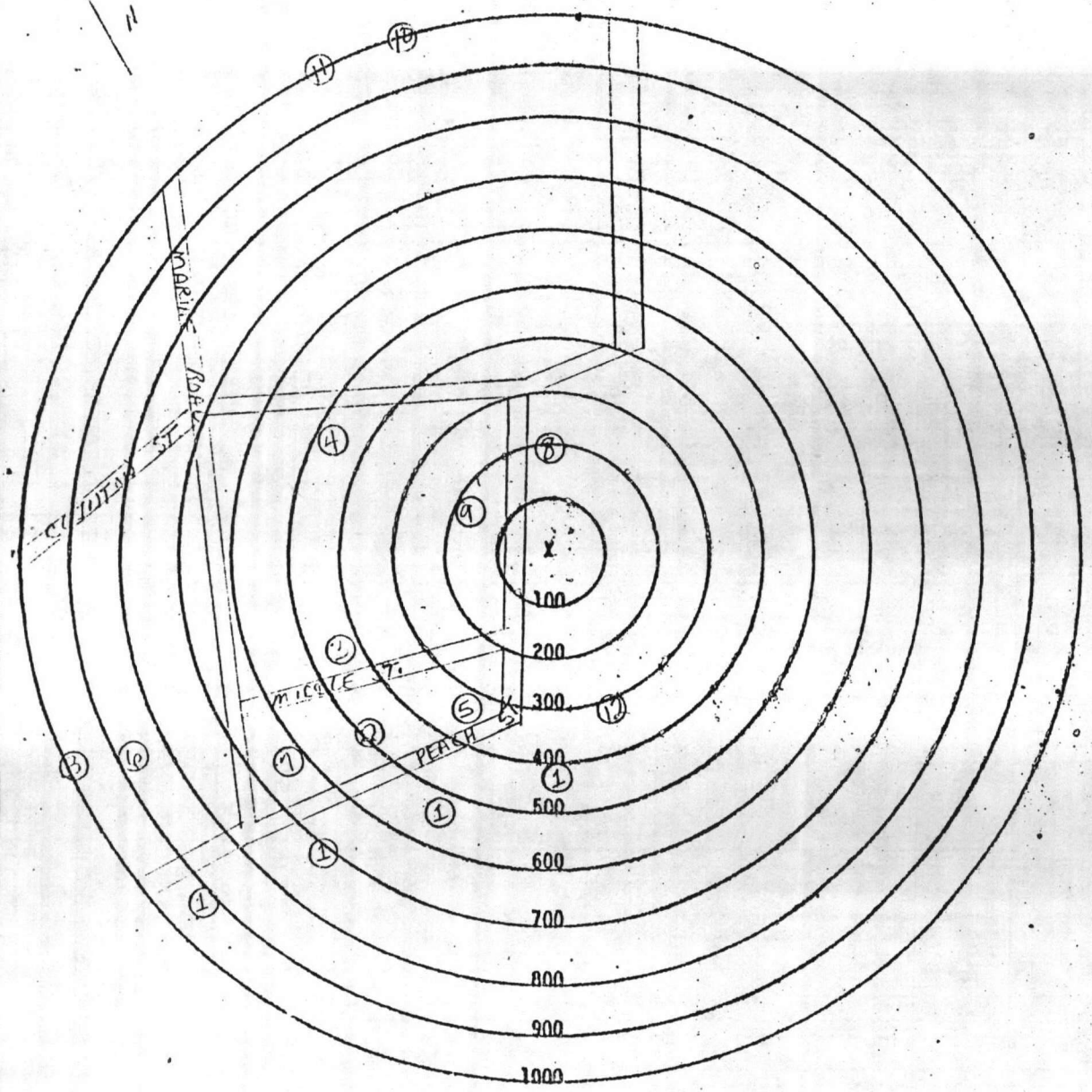

Owner Marine Corps Base, Camp Lejeune, N.C.

Location Peach Street, Courthouse Bay
(Give Street Address)

INSTRUCTIONS:

1. Show all surrounding buildings and roads within 1000 feet of subject equipment which is located at center of circles.
2. Indicate location and type of building by the use of small numbered circles with the description below.
3. Show roads as lines representing the road edges. Indicate street names and highway numbers.
4. Show wooded or cleared areas by approximate boundary lines and the words "woods", "cleared", "cornfield", etc.
5. Indicate direction of north by arrow.

CODE	DESCRIPTION
1	Barracks
2	Mess Hall
3	Administration
4	Theater
5	Fire Station
6	Telephone Exchange
7	Warehouse
8	Chaplin's Office
9	Marine Corps Exchange
10	Water Reservoir
11	Water Treatment Plant
EXAMPLE	1 Church
	2 Residence
12	Sewage Lift Station

X Indicates location of equipment.

North Carolina Department of Natural Resources & Community Development
James B. Hunt, Jr., Governor
Howard N. Lee, Secretary
DIVISION OF ENVIRONMENTAL MANAGEMENT

May 27, 1981

Permit for RLS

Mr. D.B. Barker
Major General, U.S. Marine Corps
Commanding
Marine Corps Base
Camp Lejeune, North Carolina 28542

Subject: Permit No. 4642
Marine Corps Base
Camp Lejeune, North Carolina

Dear General Barker:

In accordance with your application received May 1, 1981, we are forwarding herewith Permit No. 4642 to Marine Corps Base, Camp Lejeune, North Carolina for the construction and/or operation of air pollution abatement facilities and/or emission sources.

If any parts, requirements, or limitations contained in this permit are unacceptable to you, you have the right to an adjudicatory hearing before a hearing officer upon written demand to the Director within thirty (30) days following receipt of this permit, identifying the specific issues to be contended. Unless such demand is made, this permit shall be final and binding.

This permit shall be effective from the date of issuance until April 1, 1986, is nontransferable to future owners and operators, and shall be subject to the conditions and limitations as specified therein.

Sincerely,

Chas Wakild

Charles Wakild
Regional Supervisor

Enclosure

cc: Stan Taylor
Robert Jamieson
Wilmington Regional Office
Central Files

NORTH CAROLINA

ENVIRONMENTAL MANAGEMENT COMMISSION

DEPARTMENT OF NATURAL RESOURCES & COMMUNITY DEVELOPMENT

Raleigh

P E R M I T

For the Discharge of Air Contaminants Into the Atmosphere

In accordance with the provisions of Article 21B of Chapter 143, General Statutes of North Carolina as amended, and other applicable Laws, Rules and Regulations,

PERMISSION IS HEREBY GRANTED TO

Marine Corps Base
Camp Lejeune, North Carolina

FOR THE

operation of two No. 6 oil-fired boilers (11.2 million BTU per hour heat input each) and for the discharge of the associated stack gases into the outdoor atmosphere at its facility located at Powder Lane, Rifle Range, Camp Lejeune, North Carolina, Onslow County,

in accordance with the application received May 1, 1986 and in conformity with the plans, specifications, and other supporting data, all of which are filed with the Department of Natural Resources & Community Development and are incorporated as part of this Permit.

This Permit shall be effective from the date of its issuance until April 1, 1986, is nontransferable to future owners and operators, and shall be subject to the following specified conditions and limitations:

1. The air cleaning devices shall be properly operated and maintained at all times in such a manner as to effect an overall reduction in air pollution in keeping with the application and otherwise to reduce air contamination to the extent necessary to comply with applicable Environmental Management Commission Regulations, including 15 NCAC 2D .0503, .0516, and .0521, and in no case shall the sulfur dioxide emissions from the boilers exceed 2.3 pounds per million BTU input.

2. Reports on the operation and maintenance of the facilities shall be submitted to the Division of Environmental Management at such intervals and in such form and detail as may be required by the Division. Information required in such reports may include, but is not limited to, process weight rates, firing rates, hours of operation, and preventive maintenance schedules.

3. Camp Lejeune Marine Base, at least ninety (90) days prior to the expiration of this Permit, shall request its extension by letter. The letter should include the permit number and a description of modifications, if any, that have been made.

4. This permit is subject to revocation or modification upon a determination that information contained in the application or presented in support thereof is incorrect, conditions under which the permit renewal was granted have changed, or violations of conditions contained in the permit have occurred.

5. A violation of any term or condition of this Permit shall subject the Permittee to enforcement procedures contained in North Carolina General Statutes 143-215.114, including assessment of civil penalties.

Permit issued this the 27th day of May

NORTH CAROLINA ENVIRONMENTAL MANAGEMENT COMMISSION

Charles Wakild, Regional Supervisor
Division of Environmental Management
By Authority of the Environmental Management Commission

Permit No. 4642

BOILER #46

NORTH CAROLINA

ENVIRONMENTAL MANAGEMENT COMMISSION

RALEIGH

APPLICATION FOR

A "PERMIT"

TO CONSTRUCT AND OPERATE AIR

POLLUTION ABATEMENT FACILITIES AND/OR EMISSION SOURCES

Filed By: Major General D. B. Barker
(Name)

Marine Corps Base
(Address)

Camp Lejeune, North Carolina

AQ-22

ENCLOSURE (2)

APPLICATION INSTRUCTIONS

THIS APPLICATION IS SUBJECT TO REJECTION UNLESS ALL REQUIRED INFORMATION IS SUBMITTED

1. ATTACH DETAILED ENGINEERING DRAWINGS OF SOURCE(S), PROCESS(ES) AND COLLECTION DEVICE(S) AS REQUESTED IN EACH SECTION. IF MULTIPLE SOURCES OR DEVICES, USE ADDENDUM SHEETS AS NECESSARY.

2. Submit application, detailed engineering drawings, specifications and other supporting data and documents in TRIPLICATE.

3. Attach additional sheets as necessary to complete any portion of the application.

4. The application MUST BE SIGNED by the RESPONSIBLE INDIVIDUAL of the company that is to PURCHASE AND OPERATE the facilities for which a Permit is applied.

5. ALL APPLICANTS MUST COMPLETE THE FIRST PAGE AND SECTIONS I AND VI.

6. If an Incinerator, Fuel Burning Source, Wet Collection Device or Dry Collection Device is to be installed and operated, COMPLETE SECTIONS II, III, IV or V respectively.

7. All applications should be mailed to: ENVIRONMENTAL MANAGEMENT COMMISSION
AIR QUALITY SECTION
P. O. Box 27687
Raleigh, North Carolina 27611

APPLICATION FOR A "PERMIT"
To Construct and Operate Air Pollution Abatement Facilities and/or Emission Sources
Three Copies to be Submitted
Fourth Copy Should be Retained by Applicant

Date: 24 Sep 1980

In accordance with the provisions of Article 21 of Chapter 143, General Statutes of North Carolina as amended, application is hereby made by Marine Corps Base, Camp Lejeune, North Carolina
(Name of Company, Establishment, Town, Etc.) (Include Division or Plant Name in Addition to Parent Company if Applicable) in the County of Onslow at Jacksonville, North Carolina
(Street and City or Town Address of Plant or Facility)
for issuance of a "Permit" to construct and operate air pollution abatement facilities and/or emissions sources at above location as specified in the accompanying drawings, specifications, and other pertinent data:

1. Nature of Operation Conducted at the Above Facility: Military Operation

2. Description of Process(es) Whose Emission(s) is/are to be Controlled by the Facility or Source(s) Which is/are to be Constructed or Altered. (Complete Section I)

Boiler, No. 6 Fuel Oil — Boiler No. 46, Bldg No. RR-15

3. Furnish Type and Narrative Description of Proposed Control Device(s).(Complete Appropriate Supplemental Data Sheets for Control Device to be Installed and/or Operated. Include Make and Model Number of Control Device(s) and Number of Identical Units).

No. 6 Oil Fired, no control device.

4.

Contaminant Emitted:	Weight Rate of Emissions (lb/hr): Without Control Device	Weight Rate of Emissions (lb/hr): With Control Device	Control Efficiency (%): Without Control Device	Control Efficiency (%): With Control Device
SO_x and Particulate	26.64 lb/hr	N/A	N/A	N/A

5. Name and Address of Engineering Firm that Prepared Plans:

6. Ultimate Disposition of Collected Pollutants: None

7. Date on Which Facilities are to be Completed and in Operation: October, 19 80

8. Indicate Period of Time for Which Facilities are Estimated to be Adequate: 20 Years

9. Estimate Cost of Air Pollution Control Device $ 0

10. Hours Facility is Operated Per Year: 8,760

Name: Major General D. B. Barker, USMC
(Responsible Individual of Company Purchasing/Operating Facility...PLEASE PRINT)

Mailing Address: Marine Corps Base
Camp Lejeune
North Carolina 28542

Signature and Title: DB Barker
D. B. BARKER, Major General, USMC
Commanding General

Telephone Number: 451-5024

AQ-22

I. GENERAL DATA FOR PROCESSES

*Attach detailed process engineering drawings, equipment drawings and flow diagrams for the process(es) or source(s) being constructed or altered.

Name of Process: Heating and Steam Plant

Total Weight of Materials Entering this Process: 76 gals ~~xx~~/hr ~~xxxxxxx~~

Volume and Temperature of Air Flow Entering Control Device: _____ CFM @ _____ °F

Volume and Temperature of Effluent at Discharge Point to Atmosphere: _____ CFM @ _____ °F

Pollutant(s) to be Controlled: _____

Height of Process Stack or Vent Above Ground Level 34 ft. Inside area of Stack 3.97 ft^2.

Particulate Emission Rate (Before Control) 1.87 lb/hr

Particle Size Distribution: 0-5μ____%, 5-10μ____%, 10-20μ____%, 20-30μ____%, 30-40μ____%, 40-50μ____%, >50μ____%

Gaseous Emission(s): Name (Chemical Formula)	μg/m³, PPM	or lb/hr
SO_x		24.77

II. SUPPLEMENTARY DATA FOR INCINERATORS (Including Conical Incinerators)

Circle Type of Waste or Indicate Composition: Type 0 Type I Type II Type III Type IV

Combustible: ____% Non-Combustible: ____% Moisture: ____% Heat Value: ____BTU/lb

Total Waste Generated Per Day: _____ lb. Hours Incinerator will be Operated: _____ hrs/day

Design Capacity for Above Waste: _____ lbs/hr Manufacturer and Model Number; Approximate Cost: _____

Primary Chamber Volume: _____ $ft.^3$ Secondary Chamber Volume: _____ $ft.^3$

Air Requirements: Total Excess Air ____% Draft: Natural ____ Induced ____ Other ____

Overfire Air: ____cfm Underfire Air: ____cfm

Is there an Electronically Controlled, Exhaust Gas Temperature Modulated, Damper Installed on the Conical Incinerator for: Overfire Air Supply____, Underfire Air Supply____, Dome____Temperature Set Point____°F

Flame Port Temperature: _____ °F Secondary Chamber Temperature: _____ °F

Is there a Continuous Exhaust Gas Temperature Recorder? Yes____ No____

Stack:

Inside Area ____$ft.^2$ Height ____ft. Gas Velocity ____ft/sec Temperature ____°F Fan Capacity ____cfm Stack Lined? _____

Is there a Wet Scrubber?

Yes ____ No ____ Flow Rate of H_2O into Scrubber ____gal/min Temperature Before Scrubber ____°F

Aux. Fuel: Oil _____ Gas _____ Other _____ Burner Rating: Primary Chamber _____BTU/hr Secondary Chamber _____BTU/hr Stack _____BTU/hr

Primary Burner: Is there a Preheat Timer? Yes ____ No ____ Preheating Time: _____min.

Secondary Burner or Afterburner: Is there a Timer? Yes ____ No ____ Length of Time Burner is Operated _____min.

Is the Timer Reset by Charging Door? Yes ____ No ____ Other Mode of Burner Control _____

Type of Feed: Manual _____ Automatic _____ If Automatic, Describe _____

Distance from Incinerator to Nearest Structure(s) in which People Live and/or Work.____ft.

Signature: _____ Title: _____

III. SUPPLEMENTARY DATA FOR FUEL BURNING SOURCES

*Attach detailed dimensioned drawing or sketch showing internal features of dryers, wood or coal fired boilers, and recovery boilers.

Type of Fuel Burning Source Boiler Stack Height Above Ground Level 34 ft. Inside Area of Stack 3.97 ft^2

Make and Model Number VL - Erie City Iron Works Volume of Furnace ____ ft^3

Specify Actual Amount of Each Fuel Used in Above Source (s):

Coal ____ lb/hr; Oil Grade 6 Amount 76 gal/hr, at 146,900 BTU/gal and ____ lb/gal or ____ lb/hr

Wood ____ lb/hr; Natural Gas ____ SCF/hr, at ____ BTU/SCF; Other _____

(Specify type, amount and heating value)

Specify Maximum Rating for Each Fuel Burning Source:

Coal ____ Oil 76 g/h Wood ____ Natural Gas ____ Other _____

Maximum Sulfur Content of Fuel 2.05 % Specify Standby Fuel None Maximum % Sulfur ____

Type of Solid Fuel Burning Equipment Used: Hand Fired ___ Spreader Stoker ___ Underfeed Stoker ___ Chain Grate ___

Traveling Grate ___ Pulverizer ___ Cyclone Furnace ___ Other (Specify) _____

Ash Content of Fuel: Specify Method and Schedule of Tube Cleaning, if Applicable:

Coal ____ % Wood ____ % Other ____ % Lancing _____ Tube Blowing _____ Schedule _____

Emission Control Equipment (Describe in Detail in Sections IV and V)

Collection Device: Wet ___ Dry ___ Steam Injection ___ Air Injection ___ Is Collected Flyash Reinjected? ____

Draft on Boiler (Natural ____ Induced X) ____ cfm at ____ °F

Total Number of Fuel Burning Sources Within Property Boundaries: 2

Maximum Capacity Rating, by Type, for All Fuel Burning Units Excluding that Itemized Above: (Total Like Units) 1

Coal ____ lb/hr Wood ____ lb/hr Oil 76 gal/hr Natural Gas ____ SCF/hr

IV. SUPPLEMENTARY DATA FOR WET COLLECTION DEVICES

*Attach detailed engineering drawings of the control device and particle size versus removal efficiency curves.

Liquid Scrubbing Medium and Additives: _____

Total Liquid Injection Rate (Include Recirculated and Make-up Rates) ____ gal/min or gal/1000 ft^3

Operating Pressure Drop Across Device ____ in H_2O

ANSWER FOLLOWING QUESTIONS FOR SPECIFIC DEVICE:

VENTURI SCURBBER: Inlet Area ____ in^2 Throat Area ____ in^2 Throat Velocity ____ ft/sec

GRAVITY SPRAY CHAMBER: Number of Nozzles ____ Liquid Droplet Size ____ u Co-Current ____ Countercurrent ____

WET CYCLONE:

Body Diameter ____ in Length _____ in

Inlet Area _____ in^2 Number of Nozzles _____

Outlet Area _____ in^2

PACKED TOWER OR PLATE TOWER:

Cross-Sectional Area _____ ft^2 Type of Plate _____

Length _____ ft Depth of Packing _____ ft

Number of Plates _____ Type of Packing _____

OTHER WET COLLECTION DEVICES: GIVE COMPLETE DESCRIPTION INCLUDING DESIGN PARAMETERS AND DETAILED ENGINEERING DRAWINGS.

Signature: _____ Title: _____

V. SUPPLEMENTARY DATA FOR DRY COLLECTION DEVICES

Attach detailed engineering drawings of the control device and particle size versus removal efficiency curves.

BAGHOUSES: Cloth Area _____ ft^2

Bag Material _____

Number of Compartments _____

Pressure - Drop Total _____ in H_2O

Method of Cleaning _____

Air-to-Cloth Ratio _____ ft/min

Time Between Cleaning _____ mins, hrs

ELECTROSTATIC PRECIPITATORS:

GENERAL:

Effective Area of Grounded Collector Plates _____ ft^2

Number of Compartments or Chambers _____ Number of Cells per Compartment _____

Electrical Field Gradient at the Discharge or Emitting Electrodes _____ KV/in

Average Electrical Field Gradient at the the Grounded Collecting Electrodes _____ KV/in

Fields of Treatment _____ Potential Applied to Emitting Wires _____ KV

SINGLE STAGE TYPE:

Distance Between Emitting Wires and Collecting Plates _____ in.

Number of Isolatable Bus Sections _____ Corona Power _____ Watts/1000 cfm

TWO STAGE TYPE:

Distance Between First Stage Emitting Electrodes and Field Receiver Electrodes (Ground) _____ in

Potential Applied to Second Stage Emitting Plates _____ KV

Distance Between Second Stage Emitting Plates and Grounded Collection Plates _____ in

CYCLONES/MULTICYCLONES:

Simple Cyclone

Diameter _____ in

Inlet Dimensions _____

Outlet Dimensions _____

Pressure Drop _____ in H_2O

Number of Cyclones _____

Multicyclone

Diameter _____ in

Inlet Dimensions of Individual Cyclone _____

Outlet Dimensions of Individual Cyclone _____

Pressure Drop _____ in H_2O

Number of Cyclones _____

OTHER DRY COLLECTION DEVICES: GIVE COMPLETE DETAILED ENGINEERING DESCRIPTION AND DRAWINGS.

Signature: _____ Title: _____

Boiler 46

VI. AREA DIAGRAM

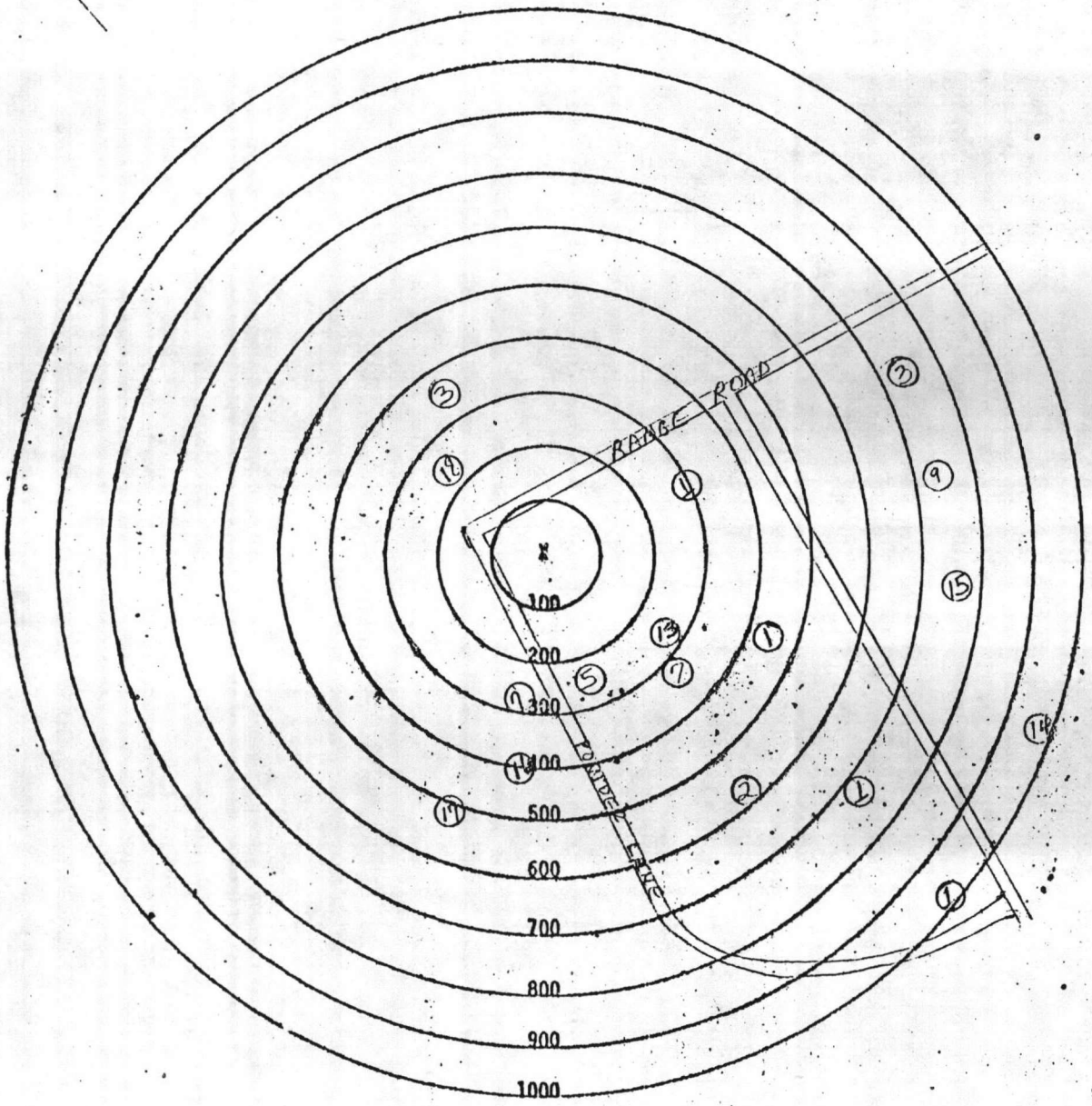

Owner Marine Corps Base, Camp Lejeune, N.C.

Location Powder Lane, Rifle Range
(Give Street Address)

INSTRUCTIONS:

1. Show all surrounding buildings and roads within 1000 feet of subject equipment which is located at center of circles.
2. Indicate location and type of building by the use of small numbered circles with the description below.
3. Show roads as lines representing the road edges. Indicate street names and highway numbers.
4. Show wooded or cleared areas by approximate boundary lines and the words "woods", "cleared", "cornfield", etc.
5. Indicate direction of north by arrow.

CODE	DESCRIPTION		
1	Barracks	14	Dispensary
2	Mess Hall	15	Barracks - Bachelor
3	Administration	16	Maintenance Shop
4		17	Training Building
5	Fire Station	18	Water Tank
6			
7	Warehouse		
8			
9	Marine Corps Exchange		
10			
13	Recreation Building		

EXAMPLE
1 Church
2 Residence

X Indicates location of equipment.

BOILER #4

NORTH CAROLINA

ENVIRONMENTAL MANAGEMENT COMMISSION

RALEIGH

#6 OIL
11.2 mm BTU/HR
STACK HT = 33.58 FT
DIA. = 2.33 FT
TEMP = 420 °F
actual velocity = 8.59 m/s

APPLICATION FOR

A "PERMIT"

TO CONSTRUCT AND OPERATE AIR

POLLUTION ABATEMENT FACILITIES AND/OR EMISSION SOURCES

Filed By: Major General D. B. Barker
(Name)

Marine Corps Base
(Address)

Camp Lejeune, North Carolina

AQ-22

APPLICATION INSTRUCTIONS

THIS APPLICATION IS SUBJECT TO REJECTION UNLESS ALL REQUIRED

INFORMATION IS SUBMITTED

1. ATTACH DETAILED ENGINEERING DRAWINGS OF SOURCE(S), PROCESS(ES) AND COLLECTION DEVICE(S) AS REQUESTED IN EACH SECTION. IF MULTIPLE SOURCES OR DEVICES, USE ADDENDUM SHEETS AS NECESSARY.

2. Submit application, detailed engineering drawings, specifications and other supporting data and documents in TRIPLICATE.

3. Attach additional sheets as necessary to complete any portion of the application.

4. The application MUST BE SIGNED by the RESPONSIBLE INDIVIDUAL of the company that is to PURCHASE AND OPERATE the facilities for which a Permit is applied.

5. ALL APPLICANTS MUST COMPLETE THE FIRST PAGE AND SECTIONS I AND VI.

6. If an Incinerator, Fuel Burning Source, Wet Collection Device or Dry Collection Device is to be installed and operated, COMPLETE SECTIONS II, III, IV or V respectively.

7. All applications should be mailed to: ENVIRONMENTAL MANAGEMENT COMMISSION
AIR QUALITY SECTION
P. O. Box 27687
Raleigh, North Carolina 27611

APPLICATION FOR A "PERMIT"
To Construct and Operate Air Pollution Abatement Facilities and/or Emission Sources
Three Copies to be Submitted
Fourth Copy Should be Retained by Applicant

Date: 24 Sep 1980

In accordance with the provisions of Article 21 of Chapter 143, General Statutes of North Carolina as amended, application is hereby made by Marine Corps Base, Camp Lejeune, North Carolina
(Name of Company, Establishment, Town, Etc.) (Include Division or Plant Name in Addition to Parent Company if Applicable) in the County of Onslow at Jacksonville, North Carolina
(Street and City or Town Address of Plant or Facility)
for issuance of a "Permit" to construct and operate air pollution abatement facilities and/or emissions sources at above location as specified in the accompanying drawings, specifications, and other pertinent data:

1. Nature of Operation Conducted at the Above Facility: Military Operation

2. Description of Process(es) Whose Emission(s) is/are to be Controlled by the Facility or Source(s) Which is/are to be Constructed or Altered. (Complete Section I)

Boiler, No. 6 Fuel Oil — Boiler No. 47, Bldg No. RR-15

3. Furnish Type and Narrative Description of Proposed Control Device(s).(Complete Appropriate Supplemental Data Sheets for Control Device to be Installed and/or Operated. Include Make and Model Number of Control Device(s) and Number of Identical Units).

No. 6 Oil Fired, no control device.

4.

Contaminant Emitted:	Weight Rate of Emissions (lb/hr): Without Control Device	With Control Device	Control Efficiency (%): Without Control Device	With Control Device
SO_x and Particulate	26.64 lb/hr	N/A	N/A	N/A

5. Name and Address of Engineering Firm that Prepared Plans:

6. Ultimate Disposition of Collected Pollutants: None

7. Date on Which Facilities are to be Completed and in Operation: October, 19 80

8. Indicate Period of Time for Which Facilities are Estimated to be Adequate: 20 Years

9. Estimate Cost of Air Pollution Control Device $ 0

10. Hours Facility is Operated Per Year: 8,760

Name: Major General D. B. Barker, USMC
(Responsible Individual of Company Purchasing/Operating Facility...PLEASE PRINT)

Mailing Address: Marine Corps Base
Camp Lejeune
North Carolina 28542

Signature and Title: DB Barker
D. B. BARKER, Major General, USMC
Commanding General

Telephone Number: 451-5024

AQ-22

I. GENERAL DATA FOR PROCESSES

Attach detailed process engineering drawings, equipment drawings and flow diagrams for the process(es) or source(s) being constructed or altered.

Name of Process: Heating and Steam Plant

Total Weight of Materials Entering this Process: 76 gals/hr

Volume and Temperature of Air Flow Entering Control Device: _____ CFM @ _____ °F

Volume and Temperature of Effluent at Discharge Point to Atmosphere: _____ CFM @ _____ °F

Pollutant(s) to be Controlled: _____

Height of Process Stack or Vent Above Ground Level 33'7" ft. Inside area of Stack 4.26 ft^2.

Particulate Emission Rate (Before Control) 1.87 lb/hr

Particle Size Distribution: 0-5μ____%, 5-10μ____%, 10-20μ____%, 20-30μ____%, 30-40μ____%, 40-50μ____%, >50μ____%

Gaseous Emission(s): Name (Chemical Formula)	$\mu g/m^3$, PPM	or lb/hr
SO_x		24.77

II. SUPPLEMENTARY DATA FOR INCINERATORS (Including Conical Incinerators)

Circle Type of Waste or Indicate Composition: Type 0 Type I Type II Type III Type IV

Combustible: ____% Non-Combustible: ____% Moisture: ____% Heat Value: ____BTU/lb

Total Waste Generated Per Day: _____ lb. Hours Incinerator will be Operated: _____ hrs/day

Design Capacity for Above Waste: _____ lbs/hr Manufacturer and Model Number; Approximate Cost: _____

Primary Chamber Volume: _____ $ft.^3$ Secondary Chamber Volume: _____ $ft.^3$

Air Requirements: Total Excess Air ____% Draft: Natural ____ Induced ____ Other ____

Overfire Air: ____cfm Underfire Air: ____cfm

Is there an Electronically Controlled, Exhaust Gas Temperature Modulated, Damper Installed on the Conical Incinerator for: Overfire Air Supply____, Underfire Air Supply____, Dome____ Temperature Set Point____°F

Flame Port Temperature: _____ °F Secondary Chamber Temperature: _____ °F

Is there a Continuous Exhaust Gas Temperature Recorder? Yes____ No____

Stack:
Inside Area ____$ft.^2$ Height ____ft. Gas Velocity ____ft/sec Temperature ____°F Fan Capacity ____cfm Stack Lined? _____

Is there a Wet Scrubber?

Yes ____ No ____ Flow Rate of H_2O into Scrubber ____gal/min Temperature Before Scrubber ____°F

Aux. Fuel: Oil _____ Gas _____ Other _____ Burner Rating: Primary Chamber _____BTU/hr Secondary Chamber _____BTU/hr Stack _____BTU/hr

Primary Burner: Is there a Preheat Timer? Yes ____ No ____ Preheating Time: _____min.

Secondary Burner or Afterburner: Is there a Timer? Yes ____ No ____ Length of Time Burner is Operated _____min.

Is the Timer Reset by Charging Door? Yes ____ No ____ Other Mode of Burner Control _____

Type of Feed: Manual _____ Automatic _____ If Automatic, Describe _____

Distance from Incinerator to Nearest Structure(s) in which People Live and/or Work ____ft.

Signature: _____ Title: _____

III. SUPPLEMENTARY DATA FOR FUEL BURNING SOURCES

*Attach detailed dimensioned drawing or sketch showing internal features of dryers, wood or coal fired boilers, and recovery boilers.

Type of Fuel Burning Source Boiler Stack Height Above Ground Level 33'7" ft. Inside Area of Stack 4.26 ft^2

Make and Model Number VL - Erie City Iron Works Volume of Furnace ____ ft^3

Specify Actual Amount of Each Fuel Used in Above Source (s):

Coal ____ lb/hr; Oil Grade 6 Amount 76 gal/hr, at 146,900 BTU/gal and ____ lb/gal or ____ lb/hr

Wood ____ lb/hr; Natural Gas ____ SCF/hr, at ____ BTU/SCF; Other ____

(Specify type, amount and heating value)

Specify Maximum Rating for Each Fuel Burning Source:

Coal ____ Oil 76 g/hr Wood ____ Natural Gas ____ Other ____

Maximum Sulfur Content of Fuel 2.05% Specify Standby Fuel None Maximum % Sulfur ____

Type of Solid Fuel Burning Equipment Used: Hand Fired ___ Spreader Stoker ___ Underfeed Stoker ___ Chain Grate ___

Traveling Grate ___ Pulverizer ___ Cyclone Furnace ___ Other (Specify) ____

Ash Content of Fuel:

Coal ____ % Wood ____ % Other ____ %

Specify Method and Schedule of Tube Cleaning, if Applicable:

Lancing ____ Tube Blowing ____ Schedule ____

Emission Control Equipment (Describe in Detail in Sections IV and V)

Collection Device: Wet ____ Dry ____ Steam Injection ____ Air Injection ____ Is Collected Flyash Reinjected? ____

Draft on Boiler (Natural ____ Induced X) ____ cfm at ____ °F

Total Number of Fuel Burning Sources Within Property Boundaries: 2

Maximum Capacity Rating, by Type, for All Fuel Burning Units Excluding that Itemized Above: (Total Like Units) 1

Coal ____ lb/hr Wood ____ lb/hr Oil 76 gal/hr Natural Gas ____ SCF/hr

IV. SUPPLEMENTARY DATA FOR WET COLLECTION DEVICES

*Attach detailed engineering drawings of the control device and particle size versus removal efficiency curves.

Liquid Scrubbing Medium and Additives: ____

Total Liquid Injection Rate (Include Recirculated and Make-up Rates) ____ gal/min or gal/1000 ft^3

Operating Pressure Drop Across Device ____ in H_2O

ANSWER FOLLOWING QUESTIONS FOR SPECIFIC DEVICE:

VENTURI SCRUBBER: Inlet Area ____ in^2 Throat Area ____ in^2 Throat Velocity ____ ft/sec

GRAVITY SPRAY CHAMBER: Number of Nozzles ____ Liquid Droplet Size ____ u Co-Current ____ Countercurrent ____

WET CYCLONE:

Body Diameter ____ in Length ____ in

Inlet Area ____ in^2 Number of Nozzles ____

Outlet Area ____ in^2

PACKED TOWER OR PLATE TOWER:

Cross-Sectional Area ____ ft^2 Type of Plate ____

Length ____ ft Depth of Packing ____ ft

Number of Plates ____ Type of Packing ____

OTHER WET COLLECTION DEVICES: GIVE COMPLETE DESCRIPTION INCLUDING DESIGN PARAMETERS AND DETAILED ENGINEERING DRAWINGS.

Signature: ____ Title: ____

V. SUPPLEMENTARY DATA FOR DRY COLLECTION DEVICES

Attach detailed engineering drawings of the control device and particle size versus removal efficiency curves.

BAGHOUSES: Cloth Area _____ ft^2

Number of Compartments _____

Method of Cleaning _____

Time Between Cleaning _____ mins, hrs

Bag Material _____

Pressure - Drop Total _____ in H_2O

Air-to-Cloth Ratio _____ ft/min

ELECTROSTATIC PRECIPITATORS:

GENERAL:

Effective Area of Grounded Collector Plates _____ ft^2

Number of Compartments or Chambers _____ Number of Cells per Compartment _____

Electrical Field Gradient at the Discharge or Emitting Electrodes _____ KV/in

Average Electrical Field Gradient at the the Grounded Collecting Electrodes _____ KV/in

Fields of Treatment _____ Potential Applied to Emitting Wires _____ KV

SINGLE STAGE TYPE:

Distance Between Emitting Wires and Collecting Plates _____ in.

Number of Isolatable Bus Sections _____ Corona Power _____ Watts/1000 cfm

TWO STAGE TYPE:

Distance Between First Stage Emitting Electrodes and Field Receiver Electrodes (Ground) _____ in

Potential Applied to Second Stage Emitting Plates _____ KV

Distance Between Second Stage Emitting Plates and Grounded Collection Plates _____ in

CYCLONES/MULTICYCLONES:

Simple Cyclone

Diameter _____ in

Inlet Dimensions _____

Outlet Dimensions _____

Pressure Drop _____ in H_2O

Number of Cyclones _____

Multicyclone

Diameter _____ in

Inlet Dimensions of Individual Cyclone _____

Outlet Dimensions of Individual Cyclone _____

Pressure Drop _____ in H_2O

Number of Cyclones _____

OTHER DRY COLLECTION DEVICES: GIVE COMPLETE DETAILED ENGINEERING DESCRIPTION AND DRAWINGS.

Signature: _____ Title: _____

Boiler 47

VI. AREA DIAGRAM

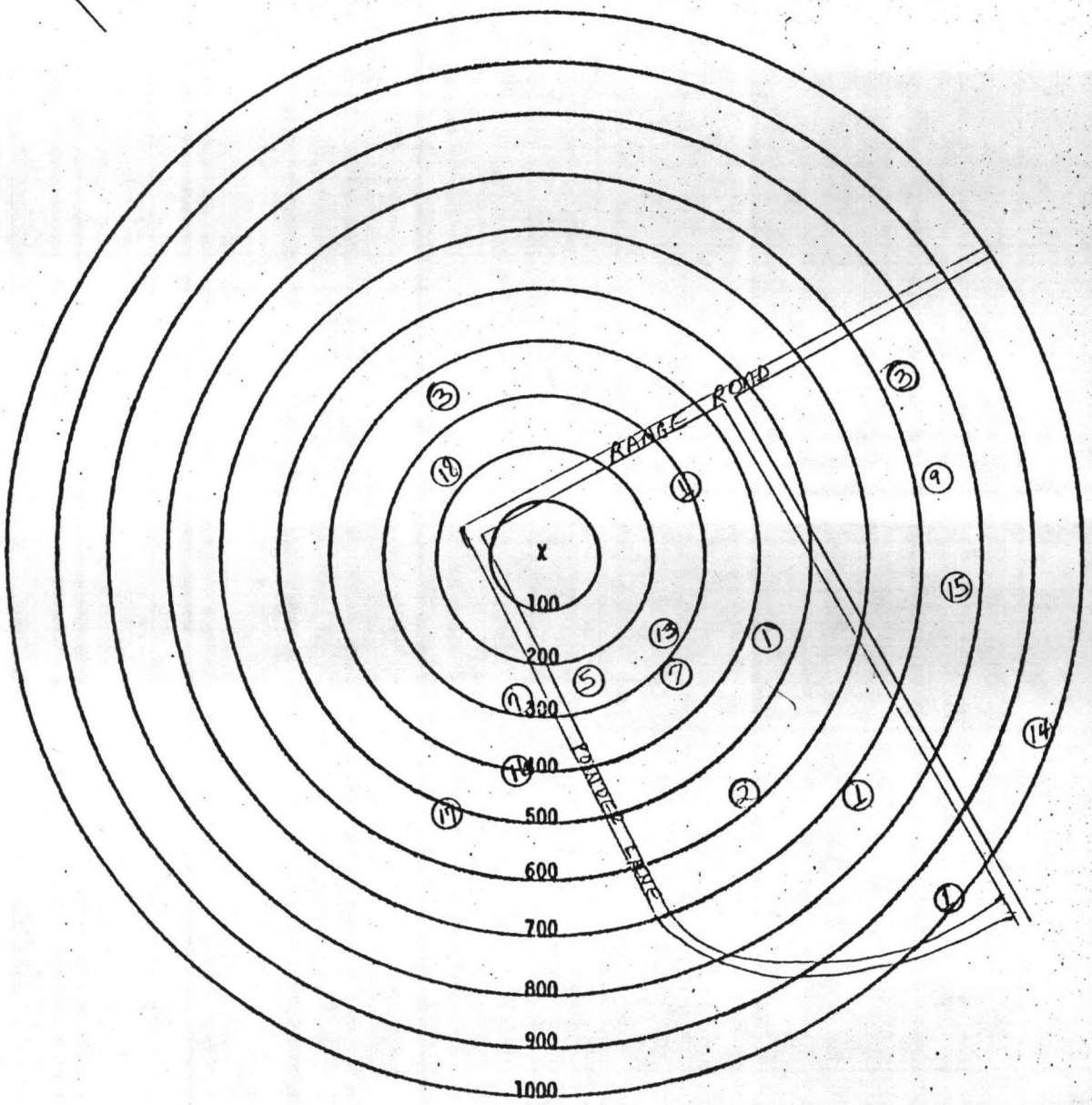

Owner Marine Corps Base, Camp Lejeune, N.C.

Location Powder Lane, Rifle Range
(Give Street Address)

INSTRUCTIONS:

1. Show all surrounding buildings and roads within 1000 feet of subject equipment which is located at center of circles.
2. Indicate location and type of building by the use of small numbered circles with the description below.
3. Show roads as lines representing the road edges. Indicate street names and highway numbers.
4. Show wooded or cleared areas by approximate boundary lines and the words "woods", "cleared", "cornfield", etc.
5. Indicate direction of north by arrow.

CODE	DESCRIPTION		
1	Barracks	14	Dispensary
2	Mess Hall	15	Barracks - Bachelor
3	Administration	16	Maintenance Shop
4		17	Training Building
5	Fire Station	18	Water Tank
6			
7	Warehouse		
8			
9	Marine Corps Exchange		
10			
13	Recreation Building		

EXAMPLE 1 Church
2 Residence

X Indicates location of equipment.

North Carolina Department of Natural Resources & Community Development
James B. Hunt, Jr., Governor
Howard N. Lee, Secretary
DIVISION OF ENVIRONMENTAL MANAGEMENT

May 27, 1981

Permit fee [illegible]

Mr. D.B. Barker
Major General, U.S. Marine Corps
Commanding
Marine Corps Base
Camp Lejeune, North Carolina 28542

Subject: Permit No. 4643
Marine Corps Base
Camp Lejeune, North Carolina

Dear General Barker:

In accordance with your application received May 1, 1981, we are forwarding herewith Permit No. 4643 to Marine Corps Base, Camp Lejeune, North Carolina for the construction and/or operation of air pollution abatement facilities and/or emission sources.

If any parts, requirements, or limitations contained in this permit are unacceptable to you, you have the right to an adjudicatory hearing before a hearing officer upon written demand to the Director within thirty (30) days following receipt of this permit, identifying the specific issues to be contended. Unless such demand is made, this permit shall be final and binding.

This permit shall be effective from the date of issuance until April 1, 1986, is nontransferable to future owners and operators, and shall be subject to the conditions and limitations as specified therein.

Sincerely,

Chas Wakild

Charles Wakild
Regional Supervisor

Enclosure

cc: Stan Taylor
Robert Jamieson
Wilmington Regional Office
Central Files

NORTH CAROLINA

ENVIRONMENTAL MANAGEMENT COMMISSION

DEPARTMENT OF NATURAL RESOURCES & COMMUNITY DEVELOPMENT

Raleigh

P E R M I T

For the Discharge of Air Contaminants Into the Atmosphere

In accordance with the provisions of Article 21B of Chapter 143, General Statutes of North Carolina as amended, and other applicable Laws, Rules and Regulations,

PERMISSION IS HEREBY GRANTED TO

Marine Corps Base
Camp Lejeune, North Carolina

FOR THE

operation of three No. 6 oil-fired boilers two (21.0 million BTU per hour heat input each) and one (17.9 million BTU per hour heat input) and for the discharge of the associated stack gases into the outdoor atmosphere at its facility located at Harlem Drive, Montford Point, Camp Lejeune, North Carolina, Onslow County,

in accordance with the application received May 1, 1986 and in conformity with the plans, specifications, and other supporting data, all of which are filed with the Department of Natural Resources & Community Development and are incorporated as part of this Permit.

This Permit shall be effective from the date of its issuance until April 1, 1986, is nontransferable to future owners and operators, and shall be subject to the following specified conditions and limitations:

1. The air cleaning devices shall be properly operated and maintained at all times in such a manner as to effect an overall reduction in air pollution in keeping with the application and otherwise to reduce air contamination to the extent necessary to comply with applicable Environmental Management Commission Regulations, including 15 NCAC 2D .0503, .0516, and .0521, and in no case shall the sulfur dioxide emissions from the boilers exceed 2.3 pounds per million BTU input.

2. Reports on the operation and maintenance of the facilities shall be submitted to the Division of Environmental Management at such intervals and in such form and detail as may be required by the Division. Information required in such reports may include, but is not limited to, process weight rates, firing rates, hours of operation, and preventive maintenance schedules.

3. Camp Lejeune Marine Base, at least ninety (90) days prior to the expiration of this Permit, shall request its extension by letter. The letter should include the permit number and a description of modifications, if any, that have been made.

4. This permit is subject to revocation or modification upon a determination that information contained in the application or presented in support thereof is incorrect, conditions under which the permit renewal was granted have changed, or violations of conditions contained in the permit have occurred.

5. A violation of any term or condition of this Permit shall subject the Permittee to enforcement procedures contained in North Carolina General Statutes 143-215.114, including assessment of civil penalties.

Permit issued this the 27th day of May

NORTH CAROLINA ENVIRONMENTAL MANAGEMENT COMMISSION

Chas. Wakild

Charles Wakild, Regional Supervisor
Division of Environmental Management
By Authority of the Environmental Management Commission

Permit No. 4643

BOILER #33

NORTH CAROLINA

ENVIRONMENTAL MANAGEMENT COMMISSION

RALEIGH

APPLICATION FOR

A "PERMIT"

TO CONSTRUCT AND OPERATE AIR

POLLUTION ABATEMENT FACILITIES AND/OR EMISSION SOURCES

Filed By: Major General D. B. Barker
(Name)

Marine Corps Base
(Address)

Camp Lejeune, North Carolina

AQ-22

ENCLOSURE (3)

APPLICATION INSTRUCTIONS

THIS APPLICATION IS SUBJECT TO REJECTION UNLESS ALL REQUIRED

INFORMATION IS SUBMITTED

1. ATTACH DETAILED ENGINEERING DRAWINGS OF SOURCE(S), PROCESS(ES) AND COLLECTION DEVICE(S) AS REQUESTED IN EACH SECTION. IF MULTIPLE SOURCES OR DEVICES, USE ADDENDUM SHEETS AS NECESSARY.

2. Submit application, detailed engineering drawings, specifications and other supporting data and documents in TRIPLICATE.

3. Attach additional sheets as necessary to complete any portion of the application.

4. The application MUST BE SIGNED by the RESPONSIBLE INDIVIDUAL of the company that is to PURCHASE AND OPERATE the facilities for which a Permit is applied.

5. ALL APPLICANTS MUST COMPLETE THE FIRST PAGE AND SECTIONS I AND VI.

6. If an Incinerator, Fuel Burning Source, Wet Collection Device or Dry Collection Device is to be installed and operated, COMPLETE SECTIONS II, III, IV or V respectively.

7. All applications should be mailed to: ENVIRONMENTAL MANAGEMENT COMMISSION
AIR QUALITY SECTION
P. O. Box 27687
Raleigh, North Carolina 27611

APPLICATION FOR A "PERMIT"
To Construct and Operate Air Pollution Abatement Facilities and/or Emission Sources
Three Copies to be Submitted
Fourth Copy Should be Retained by Applicant

Date: 24 September 1980

In accordance with the provisions of Article 21 of Chapter 143, General Statutes of North Carolina as amended, application is hereby made by Marine Corps Base, Camp Lejeune, North Carolina
(Name of Company, Establishment, Town, Etc.) (Include Division or Plant Name in Addition to Parent Company if Applicable) in the County of Onslow at Jacksonville, North Carolina
(Street and City or Town Address of Plant or Facility)
for issuance of a "Permit" to construct and operate air pollution abatement facilities and/or emissions sources at above location as specified in the accompanying drawings, specifications, and other pertinent data:

1. Nature of Operation Conducted at the Above Facility: Military Operation

2. Description of Process(es) Whose Emission(s) is/are to be Controlled by the Facility or Source(s) Which is/are to be Constructed or Altered. (Complete Section I)
Boiler, No. 6 Fuel Oil — Boiler No. 33, Bldg No. M-625

3. Furnish Type and Narrative Description of Proposed Control Device(s). (Complete Appropriate Supplemental Data Sheets for Control Device to be Installed and/or Operated. Include Make and Model Number of Control Device(s) and Number of Identical Units).
No. 6 Oil fired, no control device.

4. Contaminant Emitted:	Weight Rate of Emissions (lb/hr): Without Control Device	With Control Device	Control Efficiency (%): Without Control Device	With Control Device
SO_x and Particulate	42.77 lb/hr	N/A	N/A	N/A

5. Name and Address of Engineering Firm that Prepared Plans:

6. Ultimate Disposition of Collected Pollutants:
None

7. Date on Which Facilities are to be Completed and in Operation:
October, 19 80

8. Indicate Period of Time for Which Facilities are Estimated to be Adequate: 20 Years

9. Estimate Cost of Air Pollution Control Device $ 0

10. Hours Facility is Operated Per Year: 8,760

Name: Major General D. B. Barker, USMC
(Responsible Individual of Company Purchasing/Operating Facility...PLEASE PRINT)

Mailing Address: Marine Corps Base
Camp Lejeune
North Carolina 28542

Signature and Title: DB Barker
D. B. BARKER, MAJOR GENERAL, USMC
Commanding General

Telephone Number: 451-5024

AQ-22

I. GENERAL DATA FOR PROCESSES

Attach detailed process engineering drawings, equipment drawings and flow diagrams for the process(es) or source(s) being constructed or altered.

Name of Process: Heating and Steam Plant

Total Weight of Materials Entering this Process: 122 gals ~~lb~~/hr ~~xxxxxxx~~

Volume and Temperature of Air Flow Entering Control Device: _____ CFM @ _____ °F

Volume and Temperature of Effluent at Discharge Point to Atmosphere: _____ CFM @ _____ °F

Pollutant(s) to be Controlled: _____

Height of Process Stack or Vent Above Ground Level 46 ft. Inside area of Stack 4.9 ft^2.

Particulate Emission Rate (Before Control) 3.0 lb/hr.

Particle Size Distribution: 0-5μ____%, 5-10μ____%, 10-20μ____%, 20-30μ____%, 30-40μ____%, 40-50μ____%, >50μ____%

Gaseous Emission(s): Name (Chemical Formula)	μg/m³, PPM	or lb/hr
SO_x		39.77

II. SUPPLEMENTARY DATA FOR INCINERATORS (Including Conical Incinerators)

Circle Type of Waste or Indicate Composition: Type 0 Type I Type II Type III Type IV

Combustible: ____% Non-Combustible: ____% Moisture: ____% Heat Value: ____BTU/lb

Total Waste Generated Per Day: ____ lb. Hours Incinerator will be Operated: ____ hrs/day

Design Capacity for Above Waste: ____ lbs/hr Manufacturer and Model Number; Approximate Cost: _____

Primary Chamber Volume: ____ $ft.^3$ Secondary Chamber Volume: ____ $ft.^3$

Air Requirements: Total Excess Air ____% Draft: Natural ____ Induced ____ Other ____

Overfire Air: ____cfm Underfire Air: ____cfm

Is there an Electronically Controlled, Exhaust Gas Temperature Modulated Damper Installed on the Conical Incinerator for: Overfire Air Supply____, Underfire Air Supply____, Dome____Temperature Set Point____°F

Flame Port Temperature: ____ °F Secondary Chamber Temperature: ____ °F

Is there a Continuous Exhaust Gas Temperature Recorder? Yes____ No____

Stack:

Inside Area ____$ft.^2$ Height ____ft. Gas Velocity ____ft/sec Temperature ____°F Fan Capacity ____cfm Stack Lined? ____

Is there a Wet Scrubber?

Yes ____ No ____ Flow Rate of H_2O into Scrubber ____gal/min Temperature Before Scrubber ____°F

Aux. Fuel: Oil ____ Gas ____ Other ____ Burner Rating: Primary Chamber ____BTU/hr Secondary Chamber ____BTU/hr Stack ____BTU/hr

Primary Burner: Is there a Preheat Timer? Yes ____ No ____ Preheating Time: ____min.

Secondary Burner or Afterburner: Is there a Timer? Yes ____ No ____ Length of Time Burner is Operated ____min.

Is the Timer Reset by Charging Door? Yes ____ No ____ Other Mode of Burner Control _____

Type of Feed: Manual ____ Automatic ____ If Automatic, Describe _____

Distance from Incinerator to Nearest Structure(s) in which People Live and/or Work.____ft.

Signature: _____ Title: _____

III. SUPPLEMENTARY DATA FOR FUEL BURNING SOURCES

*Attach detailed dimensioned drawing or sketch showing internal features of dryers, wood or coal fired boilers, and recovery boilers.

Type of Fuel Burning Source Boiler Stack Height Above Ground Level 46 ft. Inside Area of Stack 4.9 ft^2

Make and Model Number E. Keeler Company Ser.# 11127 Volume of Furnace ____ ft^3

Specify Actual Amount of Each Fuel Used in Above Source (s):

Coal ____ lb/hr; Oil Grade 6 Amount 122 gal/hr, at 146,900 BTU/gal and ____ lb/gal or ____ lb/hr

Wood ____ lb/hr; Natural Gas ____ SCF/hr, at ____ BTU/SCF; Other ____

(Specify type, amount and heating value)

Specify Maximum Rating for Each Fuel Burning Source:

Coal ____ Oil 122 g/hr Wood ____ Natural Gas ____ Other ____

Maximum Sulfur Content of Fuel 2.05 % Specify Standby Fuel None Maximum % Sulfur ____

Type of Solid Fuel Burning Equipment Used: Hand Fired ___ Spreader Stoker ___ Underfeed Stoker ___ Chain Grate ___

Traveling Grate ___ Pulverizer ___ Cyclone Furnace ___ Other (Specify) ____

Ash Content of Fuel: Specify Method and Schedule of Tube Cleaning, if Applicable:

Coal ____ % Wood ____ % Other ____ % Lancing ____ Tube Blowing ____ Schedule ____

Emission Control Equipment (Describe in Detail in Sections IV and V)

Collection Device: Wet ___ Dry ___ Steam Injection ___ Air Injection ___ Is Collected Flyash Reinjected? ___

Draft on Boiler (Natural ____ Induced X) ____ cfm at ____ °F

Total Number of Fuel Burning Sources Within Property Boundaries: 3

Maximum Capacity Rating, by Type, for All Fuel Burning Units Excluding that Itemized Above: (Total Like Units) 2

Coal ____ lb/hr Wood ____ lb/hr Oil 286 gal/hr Natural Gas ____ SCF/hr

IV. SUPPLEMENTARY DATA FOR WET COLLECTION DEVICES

Attach detailed engineering drawings of the control device and particle size versus removal efficiency curves.

Liquid Scrubbing Medium and Additives: ____

Total Liquid Injection Rate (Include Recirculated and Make-up Rates) ____ gal/min or gal/1000 ft^3

Operating Pressure Drop Across Device ____ in H_2O

ANSWER FOLLOWING QUESTIONS FOR SPECIFIC DEVICE:

VENTURI SCRUBBER: Inlet Area ____ in^2 Throat Area ____ in^2 Throat Velocity ____ ft/sec

GRAVITY SPRAY CHAMBER: Number of Nozzles ____ Liquid Droplet Size ____ u Co-Current ____ Countercurrent ____

WET CYCLONE:

Body Diameter ____ in Length ____ in

Inlet Area ____ in^2 Number of Nozzles ____

Outlet Area ____ in^2

PACKED TOWER OR PLATE TOWER:

Cross-Sectional Area ____ ft^2 Type of Plate ____

Length ____ ft Depth of Packing ____ ft

Number of Plates ____ Type of Packing ____

OTHER WET COLLECTION DEVICES: GIVE COMPLETE DESCRIPTION INCLUDING DESIGN PARAMETERS AND DETAILED ENGINEERING DRAWINGS.

Signature: ____ Title: ____

V. SUPPLEMENTARY DATA FOR DRY COLLECTIC EVICES

Attach detailed engineering drawings of the control device and particle size versus removal efficiency curves.

BAGHOUSES: Cloth Area _____ ft^2

Bag Material _____

Number of Compartments _____

Pressure - Drop Total _____ in H_2O

Method of Cleaning _____

Air-to-Cloth Ratio _____ ft/min

Time Between Cleaning _____ mins, hrs

ELECTROSTATIC PRECIPITATORS:

GENERAL:

Effective Area of Grounded Collector Plates _____ ft^2

Number of Compartments or Chambers _____ Number of Cells per Compartment _____

Electrical Field Gradient at the Discharge or Emitting Electrodes _____ KV/in

Average Electrical Field Gradient at the the Grounded Collecting Electrodes _____ KV/in

Fields of Treatment _____ Potential Applied to Emitting Wires _____ KV

SINGLE STAGE TYPE:

Distance Between Emitting Wires and Collecting Plates _____ in.

Number of Isolatable Bus Sections _____ Corona Power _____ Watts/1000 cfm

TWO STAGE TYPE:

Distance Between First Stage Emitting Electrodes and Field Receiver Electrodes (Ground) _____ in

Potential Applied to Second Stage Emitting Plates _____ KV

Distance Between Second Stage Emitting Plates and Grounded Collection Plates _____ in

CYCLONES/MULTICYCLONES:

Simple Cyclone

Diameter _____ in

Inlet Dimensions _____

Outlet Dimensions _____

Pressure Drop _____ in H_2O

Number of Cyclones _____

Multicyclone

Diameter _____ in

Inlet Dimensions of Individual Cyclone _____

Outlet Dimensions of Individual Cyclone _____

Pressure Drop _____ in H_2O

Number of Cyclones _____

OTHER DRY COLLECTION DEVICES: GIVE COMPLETE DETAILED ENGINEERING DESCRIPTION AND DRAWINGS.

Signature: _____

Title: _____

Boiler 33

VI. AREA DIAGRAM

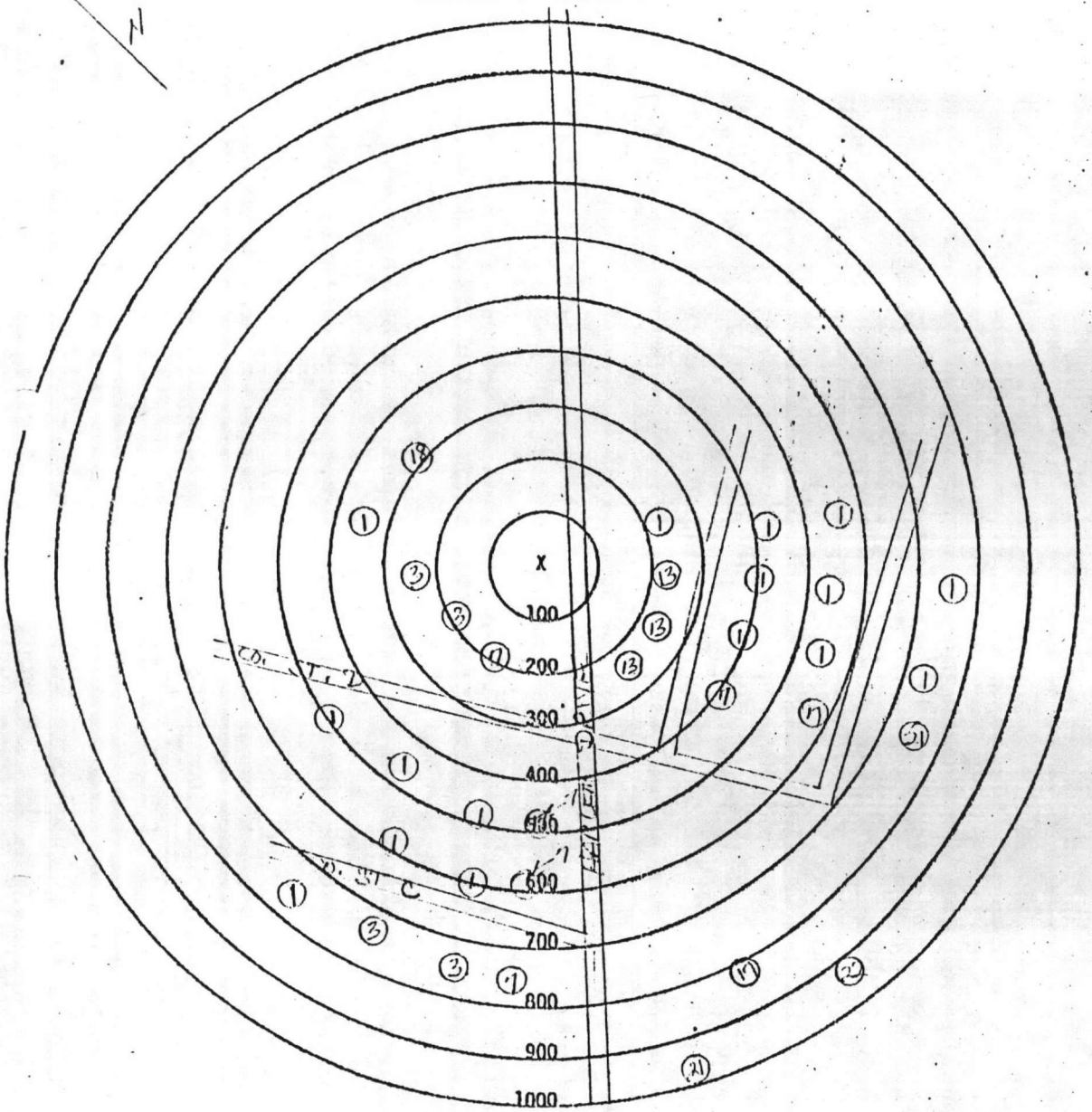

Owner Marine Corps Base, Camp Lejeune, N.C.

Location Harlem Drive, Montford Point
(Give Street Address)

INSTRUCTIONS:

1. Show all surrounding buildings and roads within 1000 feet of subject equipment which is located at center of circles.

2. Indicate location and type of building by the use of small numbered circles with the description below.

3. Show roads as lines representing the road edges. Indicate street names and highway numbers.

4. Show wooded or cleared areas by approximate boundary lines and the words "woods", "cleared", "cornfield", etc.

5. Indicate direction of north by arrow.

CODE	DESCRIPTION	
1	Barracks	17 Training Building
2		18 Elevated Water Tank
3	Administration	21 Washroom
4		22 Field Bakery
5		
6		
7	Warehouse	
8		
9		
10		
13	Recreation	
EXAMPLE	1 Church	
	2 Residence	

X Indicates location of equipment.

Boiler # 73

NORTH CAROLINA

ENVIRONMENTAL MANAGEMENT COMMISSION

RALEIGH

APPLICATION FOR

A "PERMIT"

TO CONSTRUCT AND OPERATE AIR

POLLUTION ABATEMENT FACILITIES AND/OR EMISSION SOURCES

Filed By: Major General D. B. Barker
(Name)

Marine Corps Base
(Address)

Camp Lejeune, North Carolina

AQ-22

APPLICATION INSTRUCTIONS

THIS APPLICATION IS SUBJECT TO REJECTION UNLESS ALL REQUIRED INFORMATION IS SUBMITTED

1. ATTACH DETAILED ENGINEERING DRAWINGS OF SOURCE(S), PROCESS(ES) AND COLLECTION DEVICE(S) AS REQUESTED IN EACH SECTION. IF MULTIPLE SOURCES OR DEVICES, USE ADDENDUM SHEETS AS NECESSARY.

2. Submit application, detailed engineering drawings, specifications and other supporting data and documents in TRIPLICATE.

3. Attach additional sheets as necessary to complete any portion of the application.

4. The application MUST BE SIGNED by the RESPONSIBLE INDIVIDUAL of the company that is to PURCHASE AND OPERATE the facilities for which a Permit is applied.

5. ALL APPLICANTS MUST COMPLETE THE FIRST PAGE AND SECTIONS I AND VI.

6. If an Incinerator, Fuel Burning Source, Wet Collection Device or Dry Collection Device is to be installed and operated, COMPLETE SECTIONS II, III, IV or V respectively.

7. All applications should be mailed to: ENVIRONMENTAL MANAGEMENT COMMISSION
AIR QUALITY SECTION
P. O. Box 27687
Raleigh, North Carolina 27611

APPLICATION FOR A "PERMIT"
To Construct and Operate Air Pollution Abatement Facilities and/or Emission Sources
Three Copies to be Submitted
Fourth Copy Should be Retained by Applicant

Date: 24 Sep 1980

In accordance with the provisions of Article 21 of Chapter 143, General Statutes of North Carolina as amended, application is hereby made by Marine Corps Base, Camp Lejeune, North Carolina
(Name of Company, Establishment, Town, Etc.) (Include Division or Plant Name in Addition to Parent Company if Applicable) in the County of Onslow at Jacksonville, North Carolina
(Street and City or Town Address of Plant or Facility)
for issuance of a "Permit" to construct and operate air pollution abatement facilities and/or emissions sources at above location as specified in the accompanying drawings, specifications, and other pertinent data:

1. Nature of Operation Conducted at the Above Facility: Military Operation

2. Description of Process(es) Whose Emission(s) is/are to be Controlled by the Facility or Source(s) Which is/are to be Constructed or Altered. (Complete Section I)
Boiler, No. 6 Fuel Oil — Boiler No. 73, Bldg No. M-625

3. Furnish Type and Narrative Description of Proposed Control Device(s).(Complete Appropriate Supplemental Data Sheets for Control Device to be Installed and/or Operated. Include Make and Model Number of Control Device(s) and Number of Identical Units).
No. 6 Oil Fired, no control device.

4.

Contaminant Emitted:	Weight Rate of Emissions (lb/hr): Without Control Device	With Control Device	Control Efficiency (%): Without Control Device	With Control Device
SO_x and Particulate	50.13	N/A	N/A	N/A

5. Name and Address of Engineering Firm that Prepared Plans:

6. Ultimate Disposition of Collected Pollutants:
None

7. Date on Which Facilities are to be Completed and in Operation:
October, 19 80

8. Indicate Period of Time for Which Facilities are Estimated to be Adequate: 20 Years

9. Estimate Cost of Air Pollution Control Device $ 0

10. Hours Facility is Operated Per Year: 8,760

Name: Major General D. B. Barker, USMC
(Responsible Individual of Company Purchasing/Operating Facility...PLEASE PRINT)

Mailing Address: Marine Corps Base
Camp Lejeune
North Carolina 28542

Signature and Title: DB Barker
D. B. BARKER, MAJOR GENERAL, USMC
Commanding General

Telephone Number: 451-5024

AQ-22

I. GENERAL DATA FOR PROCESSES

*Attach detailed process engineering drawings, equipment drawings and flow diagrams for the process(es) or source(s) being constructed or altered.

Name of Process: Heating and Steam Plant

Total Weight of Materials Entering this Process: 143 gals ~~lb~~/hr ~~xxxxxxx~~

Volume and Temperature of Air Flow Entering Control Device: _____ CFM @ _____ °F

Volume and Temperature of Effluent at Discharge Point to Atmosphere: _____ CFM @ _____ °F

Pollutant(s) to be Controlled: _____

Height of Process Stack or Vent Above Ground Level 41'3" ft. Inside area of Stack 5.23 ft^2.

Particulate Emission Rate (Before Control) 3.52 lb/hr

Particle Size Distribution: 0-5μ____%, 5-10μ____%, 10-20μ____%, 20-30μ____%, 30-40μ____%, 40-50μ____%, >50μ____%

Gaseous Emission(s): Name (Chemical Formula)	μg/m³, PPM	or lb/hr
SO_x		46.61

II. SUPPLEMENTARY DATA FOR INCINERATORS (Including Conical Incinerators)

Circle Type of Waste or Indicate Composition: Type 0 Type I Type II Type III Type IV

Combustible: ____% Non-Combustible: ____% Moisture: ____% Heat Value: ____BTU/lb

Total Waste Generated Per Day: _____ lb. Hours Incinerator will be Operated: _____ hrs/day

Design Capacity for Above Waste: _____ lbs/hr Manufacturer and Model Number; Approximate Cost: _____

Primary Chamber Volume: _____ $ft.^3$ Secondary Chamber Volume: _____ $ft.^3$

Air Requirements: Total Excess Air ____% Draft: Natural ____ Induced ____ Other ____

Overfire Air: ____cfm Underfire Air: ____cfm

Is there an Electronically Controlled, Exhaust Gas Temperature Modulated, Damper Installed on the Conical Incinerator for: Overfire Air Supply____, Underfire Air Supply____, Dome____Temperature Set Point____°F

Flame Port Temperature: _____ °F Secondary Chamber Temperature: _____ °F

Is there a Continuous Exhaust Gas Temperature Recorder? Yes____ No____

Stack:
Inside Area ____$ft.^2$ Height ____ft. Gas Velocity ____ft/sec Temperature ____°F Fan Capacity ____cfm Stack Lined? _____

Is there a Wet Scrubber?

Yes ___ No ___ Flow Rate of H_2O into Scrubber ____gal/min Temperature Before Scrubber ____°F

Aux. Fuel: Oil _____ Gas _____ Other _____ Burner Rating: Primary Chamber _____BTU/hr Secondary Chamber _____BTU/hr Stack _____BTU/hr

Primary Burner: Is there a Preheat Timer? Yes ____ No ____ Preheating Time: _____min.

Secondary Burner or Afterburner: Is there a Timer? Yes ____ No ____ Length of Time Burner is Operated _____min.

Is the Timer Reset by Charging Door? Yes ____ No ____ Other Mode of Burner Control _____

Type of Feed: Manual _____ Automatic _____ If Automatic, Describe _____

Distance from Incinerator to Nearest Structure(s) in which People Live and/or Work.____ft.

Signature: _____ Title: _____

*Attach detailed dimensioned drawing or sketch showing internal features of dryers, wood or coal fired boilers, and recovery boilers.

Type of Fuel Burning Source Boiler Stack Height Above Ground Level 41'3" ft. Inside Area of Stack 5.23 ft^2

Make and Model Number E. Keeler Company Ser# 14327-2 Volume of Furnace ____ ft^3

Specify Actual Amount of Each Fuel Used in Above Source (s):

Coal ____ lb/hr; Oil Grade 6 Amount 143 gal/hr, at 146,900 BTU/gal and ____ lb/gal or ____ lb/hr

Wood ____ lb/hr; Natural Gas ____ SCF/hr, at ____ BTU/SCF; Other _____

(Specify type, amount and heating value)

Specify Maximum Rating for Each Fuel Burning Source:

Coal ____ Oil 122g/h Wood ____ Natural Gas ____ Other _____

Maximum Sulfur Content of Fuel 2.05 % Specify Standby Fuel None Maximum % Sulfur ____

Type of Solid Fuel Burning Equipment Used: Hand Fired ___ Spreader Stoker ___ Underfeed Stoker ___ Chain Grate ___

Traveling Grate ___ Pulverizer ___ Cyclone Furnace ___ Other (Specify) _____

Ash Content of Fuel: Specify Method and Schedule of Tube Cleaning, if Applicable:

Coal ____ % Wood ____ % Other ____ % Lancing _____ Tube Blowing _____ Schedule _____

Emission Control Equipment (Describe in Detail in Sections IV and V)

Collection Device: Wet ____ Dry ____ Steam Injection ____ Air Injection ____ Is Collected Flyash Reinjected? ____

Draft on Boiler (Natural ____ Induced X) ____ cfm at ____ °F

Total Number of Fuel Burning Sources Within Property Boundaries: 3

Maximum Capacity Rating, by Type, for All Fuel Burning Units Excluding that Itemized Above: (Total Like Units) 2

Coal ____ lb/hr Wood ____ lb/hr Oil 265 gal/hr Natural Gas ____ SCF/hr

IV. SUPPLEMENTARY DATA FOR WET COLLECTION DEVICES

Attach detailed engineering drawings of the control device and particle size versus removal efficiency curves.

Liquid Scrubbing Medium and Additives: _____

Total Liquid Injection Rate (Include Recirculated and Make-up Rates) ____ gal/min or gal/1000 ft^3

Operating Pressure Drop Across Device ____ in H_2O

ANSWER FOLLOWING QUESTIONS FOR SPECIFIC DEVICE:

VENTURI SCRUBBER: Inlet Area ____ in^2 Throat Area ____ in^2 Throat Velocity ____ ft/sec

GRAVITY SPRAY CHAMBER: Number of Nozzles ____ Liquid Droplet Size ____ u Co-Current ____ Countercurrent ____

WET CYCLONE:

Body Diameter ____ in Length _____ in

Inlet Area _____ in^2 Number of Nozzles _____

Outlet Area _____ in^2

PACKED TOWER OR PLATE TOWER:

Cross-Sectional Area _____ ft^2 Type of Plate _____

Length _____ ft Depth of Packing _____ ft

Number of Plates _____ Type of Packing _____

OTHER WET COLLECTION DEVICES: GIVE COMPLETE DESCRIPTION INCLUDING DESIGN PARAMETERS AND DETAILED ENGINEERING DRAWINGS.

Signature: _____ Title: _____

V. SUPPLEMENTARY DATA FOR DRY COLLECTION DEVICES

*Attach detailed engineering drawings of the control device and particle size versus removal efficiency curves.

BAGHOUSES: Cloth Area _____ ft^2

Bag Material _____

Number of Compartments _____

Pressure - Drop Total _____ in H_2O

Method of Cleaning _____

Air-to-Cloth Ratio _____ ft/min

Time Between Cleaning _____ mins, hrs

ELECTROSTATIC PRECIPITATORS:

GENERAL:

Effective Area of Grounded Collector Plates _____ ft^2

Number of Compartments or Chambers _____ Number of Cells per Compartment _____

Electrical Field Gradient at the Discharge or Emitting Electrodes _____ KV/in

Average Electrical Field Gradient at the the Grounded Collecting Electrodes _____ KV/in

Fields of Treatment _____ Potential Applied to Emitting Wires _____ KV

SINGLE STAGE TYPE:

Distance Between Emitting Wires and Collecting Plates _____ in.

Number of Isolatable Bus Sections _____ Corona Power _____ Watts/1000 cfm

TWO STAGE TYPE:

Distance Between First Stage Emitting Electrodes and Field Receiver Electrodes (Ground) _____ in

Potential Applied to Second Stage Emitting Plates _____ KV

Distance Between Second Stage Emitting Plates and Grounded Collection Plates _____ in

CYCLONES/MULTICYCLONES:

Simple Cyclone

Diameter _____ in

Inlet Dimensions _____

Outlet Dimensions _____

Pressure Drop _____ in H_2O

Number of Cyclones _____

Multicyclone

Diameter _____ in

Inlet Dimensions of Individual Cyclone _____

Outlet Dimensions of Individual Cyclone _____

Pressure Drop _____ in H_2O

Number of Cyclones _____

OTHER DRY COLLECTION DEVICES: GIVE COMPLETE DETAILED ENGINEERING DESCRIPTION AND DRAWINGS.

Signature: _____

Title: _____

VI. AREA DIAGRAM

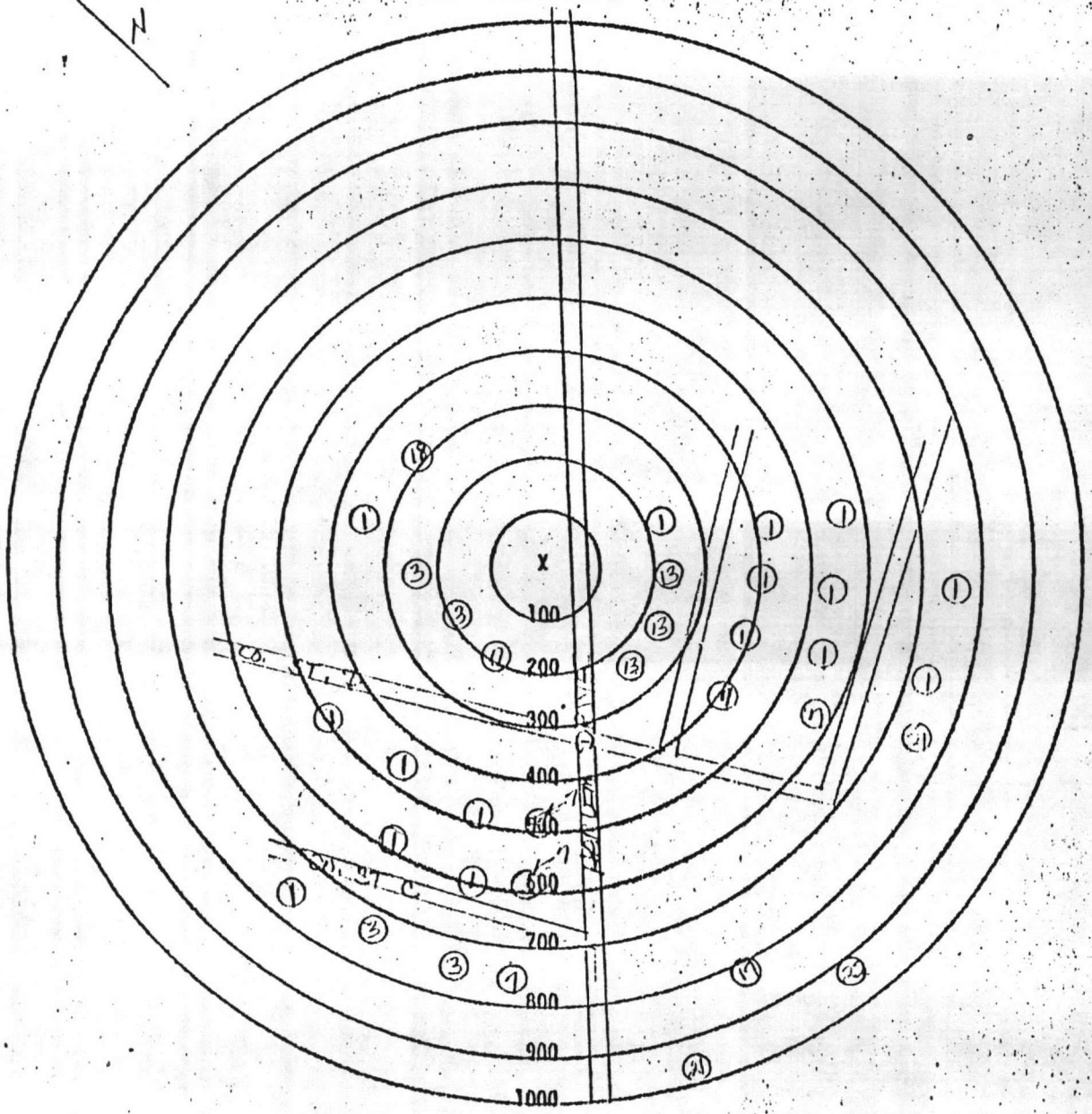

Owner Marine Corps Base, Camp Lejeune, N.C.

Location Harlem Drive, Montford Point
(Give Street Address)

INSTRUCTIONS:

1. Show all surrounding buildings and roads within 1000 feet of subject equipment which is located at center of circles.
2. Indicate location and type of building by the use of small numbered circles with the description below.
3. Show roads as lines representing the road edges. Indicate street names and highway numbers.
4. Show wooded or cleared areas by approximate boundary lines and the words "woods", "cleared", "cornfield", etc.
5. Indicate direction of north by arrow.

CODE	DESCRIPTION	
1	Barracks	17 Training Buil ng
2		18 Elevated Water Ta
3	Administration	21 Washroom
4		22 Field Bakery
5		
6		
7	Warehouse	
8		
9		
10		
13	Recreation	

EXAMPLE
1 Church
2 Residence

X Indicates location of equipment.

BOILER #74

NORTH CAROLINA

ENVIRONMENTAL MANAGEMENT COMMISSION

RALEIGH

APPLICATION FOR

A "PERMIT"

TO CONSTRUCT AND OPERATE AIR

POLLUTION ABATEMENT FACILITIES AND/OR EMISSION SOURCES

Filed By: Major General D. B. Barker
(Name)

Marine Corps Base
(Address)

Camp Lejeune, North Carolina

AQ-22

APPLICATION INSTRUCTIONS

THIS APPLICATION IS SUBJECT TO REJECTION UNLESS ALL REQUIRED INFORMATION IS SUBMITTED

1. ATTACH DETAILED ENGINEERING DRAWINGS OF SOURCE(S), PROCESS(ES) AND COLLECTION DEVICE(S) AS REQUESTED IN EACH SECTION. IF MULTIPLE SOURCES OR DEVICES, USE ADDENDUM SHEETS AS NECESSARY.

2. Submit application, detailed engineering drawings, specifications and other supporting data and documents in TRIPLICATE.

3. Attach additional sheets as necessary to complete any portion of the application.

4. The application MUST BE SIGNED by the RESPONSIBLE INDIVIDUAL of the company that is to PURCHASE AND OPERATE the facilities for which a Permit is applied.

5. ALL APPLICANTS MUST COMPLETE THE FIRST PAGE AND SECTIONS I AND VI.

6. If an Incinerator, Fuel Burning Source, Wet Collection Device or Dry Collection Device is to be installed and operated, COMPLETE SECTIONS II, III, IV or V respectively.

7. All applications should be mailed to: ENVIRONMENTAL MANAGEMENT COMMISSION
AIR QUALITY SECTION
P. O. Box 27687
Raleigh, North Carolina 27611

APPLICATION FOR A "PERMIT"
To Construct and Operate Air Pollution Abatement Facilities and/or Emission Sources
Three Copies to be Submitted
Fourth Copy Should be Retained by Applicant

Date: 24 Sep 1980

In accordance with the provisions of Article 21 of Chapter 143, General Statutes of North Carolina as amended, application is hereby made by Marine Corps Base, Camp Lejeune, North Carolina
(Name of Company, Establishment, Town, Etc.) (Include Division or Plant Name in Addition to Parent Company if Applicable) in the County of Onslow at Jacksonville, North Carolina
(Street and City or Town Address of Plant or Facility)
for issuance of a "Permit" to construct and operate air pollution abatement facilities and/or emissions sources at above location as specified in the accompanying drawings, specifications, and other pertinent data:

1. Nature of Operation Conducted at the Above Facility: Military Operation

2. Description of Process(es) Whose Emission(s) is/are to be Controlled by the Facility or Source(s) Which is/are to be Constructed or Altered. (Complete Section I)
Boiler, No. 6 Fuel Oil — Boiler No. 74, Bldg No. M-625

3. Furnish Type and Narrative Description of Proposed Control Device(s).(Complete Appropriate Supplemental Data Sheets for Control Device to be Installed and/or Operated. Include Make and Model Number of Control Device(s) and Number of Identical Units).
No. 6 Oil Fired, no control device.

4. Contaminant Emitted:	Weight Rate of Emissions (lb/hr): Without Control Device	With Control Device	Control Efficiency (%): Without Control Device	With Control Device
SO_x and Particulate	50.13	N/A	N/A	N/A

5. Name and Address of Engineering Firm that Prepared Plans:

6. Ultimate Disposition of Collected Pollutants:
None

7. Date on Which Facilities are to be Completed and in Operation:
October, 19 80

8. Indicate Period of Time for Which Facilities are Estimated to be Adequate: 20 Years

9. Estimate Cost of Air Pollution Control Device $ 0

10. Hours Facility is Operated Per Year: 8,760

1

Name: Major General D. B. Barker, USMC
(Responsible Individual of Company Purchasing/Operating Facility...PLEASE PRINT)

Mailing Address: Marine Corps Base
Camp Lejeune
North Carolina 28542

Signature and Title: DB Barker
D. B. BARKER, MAJOR GENERAL, USMC
Commanding General

Telephone Number: 451-5024

AQ-22

I. GENERAL DATA FOR PROCESSES

*Attach detailed process engineering drawings, equipment drawings and flow diagrams for the process(es) or source(s) being constructed or altered.

Name of Process: Heating and Steam Plant

Total Weight of Materials Entering this Process: 143 gals/hr

Volume and Temperature of Air Flow Entering Control Device: _____ CFM @ _____ °F

Volume and Temperature of Effluent at Discharge Point to Atmosphere: _____ CFM @ _____ °F

Pollutant(s) to be Controlled: _____

Height of Process Stack or Vent Above Ground Level 41'3" ft. Inside area of Stack 5.23 ft^2.

Particulate Emission Rate (Before Control) 3.52 lb/hr

Particle Size Distribution: 0-5μ____%, 5-10μ____%, 10-20μ____%, 20-30μ____%, 30-40μ____%, 40-50μ____%, >50μ____%

Gaseous Emission(s): Name (Chemical Formula)	μg/m³, PPM	or lb/hr
SO_x		46.61

II. SUPPLEMENTARY DATA FOR INCINERATORS (Including Conical Incinerators)

Circle Type of Waste or Indicate Composition: Type 0 Type I Type II Type III Type IV

Combustible: ____% Non-Combustible: ____% Moisture: ____% Heat Value: ____BTU/lb

Total Waste Generated Per Day: _____ lb. Hours Incinerator will be Operated: _____ hrs/day

Design Capacity for Above Waste: _____ lbs/hr Manufacturer and Model Number; Approximate Cost: _____

Primary Chamber Volume: _____ $ft.^3$ Secondary Chamber Volume: _____ $ft.^3$

Air Requirements: Total Excess Air ____% Draft: Natural ____ Induced ____ Other ____

Overfire Air: ____cfm Underfire Air: ____cfm

Is there an Electronically Controlled, Exhaust Gas Temperature Modulated, Damper Installed on the Conical Incinerator for: Overfire Air Supply____, Underfire Air Supply____, Dome____ Temperature Set Point____°F

Flame Port Temperature: _____ °F Secondary Chamber Temperature: _____ °F

Is there a Continuous Exhaust Gas Temperature Recorder? Yes____ No____

Stack:
Inside Area ____$ft.^2$ Height ____ft. Gas Velocity ____ft/sec Temperature ____°F Fan Capacity ____cfm Stack Lined? _____

Is there a Wet Scrubber?

Yes ____ No ____ Flow Rate of H_2O into Scrubber ____gal/min Temperature Before Scrubber ____°F

Aux. Fuel: Oil _____ Gas _____ Other _____ Burner Rating: Primary Chamber _____BTU/hr Secondary Chamber _____BTU/hr Stack _____BTU/hr

Primary Burner: Is there a Preheat Timer? Yes ____ No ____ Preheating Time: _____min.

Secondary Burner or Afterburner: Is there a Timer? Yes ____ No ____ Length of Time Burner is Operated _____min.

Is the Timer Reset by Charging Door? Yes ____ No ____ Other Mode of Burner Control _____

Type of Feed: Manual _____ Automatic _____ If Automatic, Describe _____

Distance from Incinerator to Nearest Structure(s) in which People Live and/or Work.____ft.

Signature: _____ Title: _____

III. SUPPLEMENTARY DATA FOR FUEL BURNING SOURCES

Attach detailed dimensioned drawing or sketch showing internal features of dryers, wood or coal fired boilers, and recovery boilers.

Type of Fuel Burning Source Boiler Stack Height Above Ground Level 41'3" ft. Inside Area of Stack 5.23 ft^2

Make and Model Number E. Keeler Company Ser.#14327-2 Volume of Furnace ____ ft^3

Specify Actual Amount of Each Fuel Used in Above Source (s):

Coal ____ lb/hr; Oil Grade 6 Amount 143 gal/hr, at 146,900 BTU/gal and ____ lb/gal or ____ lb/hr

Wood ____ lb/hr; Natural Gas ____ SCF/hr, at ____ BTU/SCF; Other ____

(Specify type, amount and heating value)

Specify Maximum Rating for Each Fuel Burning Source:

Coal ____ Oil 122 g/hr Wood ____ Natural Gas ____ Other ____

Maximum Sulfur Content of Fuel 2.05% Specify Standby Fuel None Maximum % Sulfur ____

Type of Solid Fuel Burning Equipment Used: Hand Fired ___ Spreader Stoker ___ Underfeed Stoker ___ Chain Grate ___

Traveling Grate ___ Pulverizer ___ Cyclone Furnace ___ Other (Specify) ____

Ash Content of Fuel: Specify Method and Schedule of Tube Cleaning, if Applicable:

Coal ____ % Wood ____ % Other ____ % Lancing ____ Tube Blowing ____ Schedule ____

Emission Control Equipment (Describe in Detail in Sections IV and V)

Collection Device: Wet ___ Dry ___ Steam Injection ___ Air Injection ___ Is Collected Flyash Reinjected? ___

Draft on Boiler (Natural ____ Induced X) ____ cfm at ____ °F

Total Number of Fuel Burning Sources Within Property Boundaries: 3

Maximum Capacity Rating, by Type, for All Fuel Burning Units Excluding that Itemized Above: (Total Like Units) 2

Coal ___ lb/hr Wood ___ lb/hr Oil 265 gal/hr Natural Gas ___ SCF/hr

IV. SUPPLEMENTARY DATA FOR WET COLLECTION DEVICES

Attach detailed engineering drawings of the control device and particle size versus removal efficiency curves.

Liquid Scrubbing Medium and Additives: ____

Total Liquid Injection Rate (Include Recirculated and Make-up Rates) ____ gal/min or gal/1000 ft^3

Operating Pressure Drop Across Device ___ in H_2O

ANSWER FOLLOWING QUESTIONS FOR SPECIFIC DEVICE:

VENTURI SCRUBBER: Inlet Area ___ in^2 Throat Area ___ in^2 Throat Velocity ___ ft/sec

GRAVITY SPRAY CHAMBER: Number of Nozzles ___ Liquid Droplet Size ___ u Co-Current ___ Countercurrent ___

WET CYCLONE:

Body Diameter ___ in Length ____ in

Inlet Area ____ in^2 Number of Nozzles ____

Outlet Area ____ in^2

PACKED TOWER OR PLATE TOWER:

Cross-Sectional Area ____ ft^2 Type of Plate ____

Length ____ ft Depth of Packing ____ ft

Number of Plates ____ Type of Packing ____

OTHER WET COLLECTION DEVICES: GIVE COMPLETE DESCRIPTION INCLUDING DESIGN PARAMETERS AND DETAILED ENGINEERING DRAWINGS.

Signature: ____ Title: ____

V. SUPPLEMENTARY DATA FOR DRY COLLECTION DEVICES

*Attach detailed engineering drawings of the control device and particle size versus removal efficiency curves.

BAGHOUSES: Cloth Area _____ ft^2

Bag Material _____

Number of Compartments _____

Pressure - Drop Total _____ in H_2O

Method of Cleaning _____

Air-to-Cloth Ratio _____ ft/min

Time Between Cleaning _____ mins, hrs

ELECTROSTATIC PRECIPITATORS:

GENERAL:

Effective Area of Grounded Collector Plates _____ ft^2

Number of Compartments or Chambers _____ Number of Cells per Compartment _____

Electrical Field Gradient at the Discharge or Emitting Electrodes _____ KV/in

Average Electrical Field Gradient at the the Grounded Collecting Electrodes _____ KV/in

Fields of Treatment _____ Potential Applied to Emitting Wires _____ KV

SINGLE STAGE TYPE:

Distance Between Emitting Wires and Collecting Plates _____ in.

Number of Isolatable Bus Sections _____ Corona Power _____ Watts/1000 cfm

TWO STAGE TYPE:

Distance Between First Stage Emitting Electrodes and Field Receiver Electrodes (Ground) _____ in

Potential Applied to Second Stage Emitting Plates _____ KV

Distance Between Second Stage Emitting Plates and Grounded Collection Plates _____ in

CYCLONES/MULTICYCLONES:

Simple Cyclone

Diameter _____ in

Inlet Dimensions _____

Outlet Dimensions _____

Pressure Drop _____ in H_2O

Number of Cyclones _____

Multicyclone

Diameter _____ in

Inlet Dimensions of Individual Cyclone _____

Outlet Dimensions of Individual Cyclone _____

Pressure Drop _____ in H_2O

Number of Cyclones _____

OTHER DRY COLLECTION DEVICES: GIVE COMPLETE DETAILED ENGINEERING DESCRIPTION AND DRAWINGS.

Signature: _____

Title: _____

Boiler 74

VI. AREA DIAGRAM

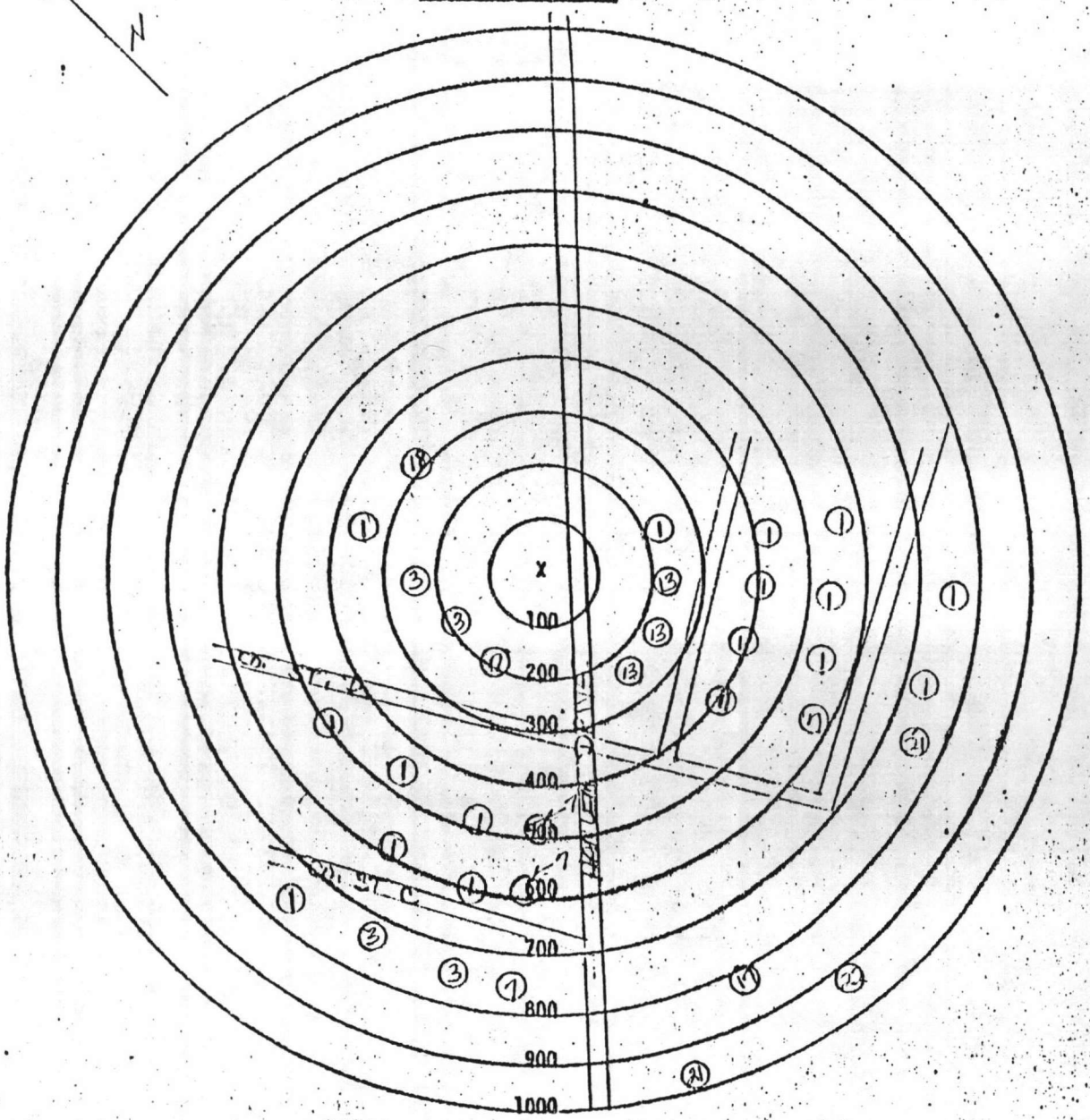

Owner Marine Corps Base, Camp Lejeune, N.C.

Location Harlem Drive, Montford Point
(Give Street Address)

INSTRUCTIONS:

1. Show all surrounding buildings and roads within 1000 feet of subject equipment which is located at center of circles.
2. Indicate location and type of building by the use of small numbered circles with the description below.
3. Show roads as lines representing the road edges. Indicate street names and highway numbers.
4. Show wooded or cleared areas by approximate boundary lines and the words "woods", "cleared", "cornfield", etc.
5. Indicate direction of north by arrow.

CODE	DESCRIPTION		
1	Barracks	17	Training Bui ng
2		18	Elevated Water Tank
3	Administration		
4		21	Washroom
5		22	Field Bakery
6			
7	Warehouse		
8			
9			
10			
13	Recreation		

EXAMPLE 1 Church
2 Residence

X Indicates location of equipment.

File
7A

UNITED STATES MARINE CORPS
Marine Corps Base
Camp Lejeune, North Carolina 28542

FAC:KPM:mkc
6280
2 Jun 1981

From: Commanding General
To: Base Maintenance Officer
Via: Staff Judge Advocate

Subj: Permits for construction and/or operation of air pollution abatement facilities and/or emission sources

Encl: (1) Regional Supervisor, N. C. Dept of Natural Resources & Community Development, Div of Environ Mgmt ltr of 27 May 1981 w/Permit No. 4642
(2) Regional Supervisor, N. C. Dept of Natural Resources & Community Development, Div of Environ Mgmt ltr of 27 May 1981 w/Permit No. 4643

1. Enclosures (1) and (2) are forwarded for appropriate action.

K. P. Millice

K. P. MILLICE, Jr.
By direction

North Carolina Department of Natural Resources & Community Development
James B. Hunt, Jr., Governor
Howard N. Lee, Secretary
DIVISION OF ENVIRONMENTAL MANAGEMENT

May 22, 1981

Permit
AS-4151

Mr. D.B. Barker
Major General, U.S. Marine Corps
Commanding
Marine Corps Base
Camp Lejeune, North Carolina 28542

Subject: Permit No. 4644
Marine Corps Base
Camp Lejeune, North Carolina

Dear General Barker:

In accordance with your application received May 1, 1986, we are forwarding herewith Permit No. 4644 to Marine Corps Base, Camp Lejeune, North Carolina for the construction and/or operation of air pollution abatement facilities and/or emission sources.

If any parts, requirements, or limitations contained in this permit are unacceptable to you, you have the right to an adjudicatory hearing before a hearing officer upon written demand to the Director within thirty (30) days following receipt of this permit, identifying the specific issues to be contended. Unless such demand is made, this permit shall be final and binding.

This permit shall be effective from the date of issuance until April 1, 1986, is nontransferable to future owners and operators, and shall be subject to the conditions and limitations as specified therein.

Sincerely,

Charles Wakild
Charles Wakild
Regional Supervisor

Enclosure

cc: Stan Taylor
Robert Jamieson
Wilmington Regional Office
Central Files

NORTH CAROLINA

ENVIRONMENTAL MANAGEMENT COMMISSION

DEPARTMENT OF NATURAL RESOURCES & COMMUNITY DEVELOPMENT

Raleigh

P E R M I T

For the Discharge of Air Contaminants Into the Atmosphere

In accordance with the provisions of Article 21B of Chapter 143, General Statutes of North Carolina as amended, and other applicable Laws, Rules and Regulations,

PERMISSION IS HEREBY GRANTED TO

Marine Corps Base
Camp Lejeune, North Carolina

FOR THE

operation of three No. 6 oil-fired boilers (48.0 million BTU per hour heat input each) and for the discharge of the associated stack gases into the outdoor atmosphere at its facility located at the New River Air Station, Camp Lejeune, North Carolina, Onslow County,

in accordance with the application received May 1, 1981, and in conformity with the plans, specifications, and other supporting data, all of which are filed with the Department of Natural Resources & Community Development and are incorporated as part of this Permit.

This Permit shall be effective from the date of its issuance until April 1, 1986, is nontransferable to future owners and operators, and shall be subject to the following specified conditions and limitations:

1. The air cleaning devices shall be properly operated and maintained at all times in such a manner as to effect an overall reduction in air pollution in keeping with the application and otherwise to reduce air contamination to the extent necessary to comply with applicable Environmental Management Commission Regulations, including 15 NCAC 2D .0503, .0516, and .0521, and in no case shall the sulfur dioxide emissions from the boilers exceed 2.3 pounds per million BTU input.

2. Reports on the operation and maintenance of the facilities shall be submitted to the Division of Environmental Management at such intervals and in such form and detail as may be required by the Division. Information required in such reports may include, but is not limited to, process weight rates, firing rates, hours of operation, and preventive maintenance schedules.

3. Camp Lejeune Marine Base, at least ninety (90) days prior to the expiration of this Permit, shall request its extension by letter. The letter should include the permit number and a description of modifications, if any, that have been made.

4. This permit is subject to revocation or modification upon a determination that information contained in the application or presented in support thereof is uncorrect, conditions under which the permit renewal was granted have changed, or violations of conditions contained in the permit have occurred.

5. A violation of any term or condition of this Permit shall subject the Permittee to enforcement procedures contained in North Carolina General Statutes 143-215.114, including assessment of civil penalties.

Permit issued this the 22nd day of May

NORTH CAROLINA ENVIRONMENTAL MANAGEMENT COMMISSION

Charles Wakild, Regional Supervisor
Division of Environmental Management
By Authority of the Environmental Management Commission

Permit No. 4644

BOILER #16

NORTH CAROLINA

ENVIRONMENTAL MANAGEMENT COMMISSION

RALEIGH

APPLICATION FOR

A "PERMIT"

TO CONSTRUCT AND OPERATE AIR

POLLUTION ABATEMENT FACILITIES AND/OR EMISSION SOURCES

Filed By: Major General D. B. Barker
(Name)

Marine Corps Base
(Address)

Camp Lejeune, North Carolina

AQ-22

ENCLOSURE (6)

APPLICATION INSTRUCTIONS

THIS APPLICATION IS SUBJECT TO REJECTION UNLESS ALL REQUIRED

INFORMATION IS SUBMITTED

1. ATTACH DETAILED ENGINEERING DRAWINGS OF SOURCE(S), PROCESS(ES) AND COLLECTION DEVICE(S) AS REQUESTED IN EACH SECTION. IF MULTIPLE SOURCES OR DEVICES, USE ADDENDUM SHEETS AS NECESSARY.

2. Submit application, detailed engineering drawings, specifications and other supporting data and documents in TRIPLICATE.

3. Attach additional sheets as necessary to complete any portion of the application.

4. The application MUST BE SIGNED by the RESPONSIBLE INDIVIDUAL of the company that is to PURCHASE AND OPERATE the facilities for which a Permit is applied.

5. ALL APPLICANTS MUST COMPLETE THE FIRST PAGE AND SECTIONS I AND VI.

6. If an Incinerator, Fuel Burning Source, Wet Collection Device or Dry Collection Device is to be installed and operated, COMPLETE SECTIONS II, III, IV or V respectively.

7. All applications should be mailed to: ENVIRONMENTAL MANAGEMENT COMMISSION
AIR QUALITY SECTION
P. O. Box 27687
Raleigh, North Carolina 27611

APPLICATION FOR A "PERMIT"
To Construct and Operate Air Pollution Abatement Facilities and/or Emission Sources
Three Copies to be Submitted
Fourth Copy Should be Retained by Applicant

Date: 24 September 1980

In accordance with the provisions of Article 21 of Chapter 143, General Statutes of North Carolina as amended, application is hereby made by Marine Corps Base, Camp Lejeune, North Carolina
(Name of Company, Establishment, Town, Etc.) (Include Division or Plant Name in Addition to Parent Company if Applicable) in the County of Onslow at Jacksonville, North Carolina
(Street and City or Town Address of Plant or Facility)
for issuance of a "Permit" to construct and operate air pollution abatement facilities and/or emissions sources at above location as specified in the accompanying drawings, specifications, and other pertinent data:

1. Nature of Operation Conducted at the Above Facility: Military Operation

2. Description of Process(es) Whose Emission(s) is/are to be Controlled by the Facility or Source(s) Which is/are to be Constructed or Altered. (Complete Section I)
Boiler, No. 6 fuel oil Boiler No. 16
Bldg No. AS-4151

3. Furnish Type and Narrative Description of Proposed Control Device(s).(Complete Appropriate Supplemental Data Sheets for Control Device to be Installed and/or Operated. Include Make and Model Number of Control Device(s) and Number of Identical Units).
No. 6 oil fired, no control device.

4.

Contaminant Emitted:	Weight Rate of Emissions (lb/hr): Without Control Device	With Control Device	Control Efficiency (%): Without Control Device	With Control Device
SO_x and Particulate	114.63 lb/hr	N/A	N/A	N/A

5. Name and Address of Engineering Firm that Prepared Plans:

6. Ultimate Disposition of Collected Pollutants:
None

7. Date on Which Facilities are to be Completed and in Operation:
October, 19 80

8. Indicate Period of Time for Which Facilities are Estimated to be Adequate: 20 Years

9. Estimate Cost of Air Pollution Control Device $ 0

10. Hours Facility is Operated Per Year: 8,760

Name: Major General D. B. Barker, USMC
(Responsible Individual of Company Purchasing/Operating Facility...PLEASE PRINT)

Mailing Address: Marine Corps Base
Camp Lejeune
North Carolina 28542

Signature and Title: DB Barker
D. B. BARKER, MAJOR GENERAL, USMC
Commanding General

Telephone Number: 451-5024

AQ-22

I. GENERAL DATA FOR PROCESSES

*Attach detailed process engineering drawings, equipment drawings and flow diagrams for the process(es) or source(s) being constructed or altered.

Name of Process: Heating and Steam Plant

Total Weight of Materials Entering this Process: 327 gals~~XX~~/hr~~XXXXXXXX~~

Volume and Temperature of Air Flow Entering Control Device: _____ CFM @ _____ °F

Volume and Temperature of Effluent at Discharge Point to Atmosphere: _____ CFM @ _____ °F

Pollutant(s) to be Controlled: _____

Height of Process Stack or Vent Above Ground Level 43 ft. Inside area of Stack 8.9 ft^2.

Particulate Emission Rate (Before Control) 8.044 lb/hr

Particle Size Distribution: 0-5μ____%, 5-10μ____%, 10-20μ____%, 20-30μ____%, 30-40μ____%, 40-50μ____%, >50μ____%

Gaseous Emission(s): Name (Chemical Formula)	μg/m^3, PPM	or lb/hr
SO_x		106.59

II. SUPPLEMENTARY DATA FOR INCINERATORS (Including Conical Incinerators)

Circle Type of Waste or Indicate Composition: Type 0 Type I Type II Type III Type IV

Combustible: ____% Non-Combustible: ____% Moisture: ____% Heat Value: ____BTU/lb

Total Waste Generated Per Day: _____ lb. Hours Incinerator will be Operated: _____ hrs/day

Design Capacity for Above Waste: _____ lbs/hr Manufacturer and Model Number; Approximate Cost: _____

Primary Chamber Volume: _____ ft.^{3} Secondary Chamber Volume: _____ ft.^{3}

Air Requirements: Total Excess Air ____% Draft: Natural ____ Induced ____ Other ____

Overfire Air: ____cfm Underfire Air: ____cfm

Is there an Electronically Controlled, Exhaust Gas Temperature Modulated, Damper Installed on the Conical Incinerator for: Overfire Air Supply____, Underfire Air Supply____, Dome____ Temperature Set Point____°F

Flame Port Temperature: _____ °F Secondary Chamber Temperature: _____ °F

Is there a Continuous Exhaust Gas Temperature Recorder? Yes____ No____

Stack:

Inside Area ____ft.^{2} Height ____ft. Gas Velocity ____ft/sec Temperature ____°F Fan Capacity ____cfm Stack Lined? _____

Is there a Wet Scrubber?

Yes ____ No ____ Flow Rate of H_2O into Scrubber ____gal/min Temperature Before Scrubber ____°F

Aux. Fuel: Oil _____ Gas _____ Other _____ Burner Rating: Primary Chamber _____BTU/hr Secondary Chamber _____BTU/hr Stack _____BTU/hr

Primary Burner: Is there a Preheat Timer? Yes ____ No ____ Preheating Time: _____min.

Secondary Burner or Afterburner: Is there a Timer? Yes ____ No ____ Length of Time Burner is Operated _____min.

Is the Timer Reset by Charging Door? Yes ____ No ____ Other Mode of Burner Control _____

Type of Feed: Manual _____ Automatic _____ If Automatic, Describe _____

Distance from Incinerator to Nearest Structure(s) in which People Live and/or Work.____ft.

Signature: _____ Title: _____

III. SUPPLEMENTARY DATA FOR FUEL BURNING SOURCES

*Attach detailed dimensioned drawing or sketch showing internal features of dryers, wood or coal fired boilers, and recovery boilers.

Type of Fuel Burning Source Boiler Stack Height Above Ground Level 43 ft. Inside Area of Stack 8.9 ft^2

Make and Model Number Trane Murray Company Ser. 10735 Volume of Furnace ____ ft^3

Specify Actual Amount of Each Fuel Used in Above Source (s):

Coal ____ lb/hr; Oil Grade 6 Amount 327 gal/hr, at 146,900 BTU/gal and ____ lb/gal or ____ lb/hr

Wood ____ lb/hr; Natural Gas ____ SCF/hr, at ____ BTU/SCF; Other ____

(Specify type, amount and heating value)

Specify Maximum Rating for Each Fuel Burning Source:

Coal ____ Oil 327 Wood ____ Natural Gas ____ Other ____

Maximum Sulfur Content of Fuel 2.05 % Specify Standby Fuel None Maximum % Sulfur ____

Type of Solid Fuel Burning Equipment Used: Hand Fired ___ Spreader Stoker ___ Underfeed Stoker ___ Chain Grate ___

Traveling Grate ___ Pulverizer ___ Cyclone Furnace ___ Other (Specify) ____

Ash Content of Fuel:

Coal ____ % Wood ____ % Other ____ %

Specify Method and Schedule of Tube Cleaning, if Applicable:

Lancing ____ Tube Blowing ____ Schedule ____

Emission Control Equipment (Describe in Detail in Sections IV and V)

Collection Device: Wet ___ Dry ___ Steam Injection ___ Air Injection ___ Is Collected Flyash Reinjected? ___

Draft on Boiler (Natural ____ Induced X) ____ cfm at ____ °F

Total Number of Fuel Burning Sources Within Property Boundaries: 3

Maximum Capacity Rating, by Type, for All Fuel Burning Units Excluding that Itemized Above: (Total Like Units) 2

Coal ____ lb/hr Wood ____ lb/hr Oil 654 gal/hr Natural Gas ____ SCF/hr

IV. SUPPLEMENTARY DATA FOR WET COLLECTION DEVICES

*Attach detailed engineering drawings of the control device and particle size versus removal efficiency curves.

Liquid Scrubbing Medium and Additives: ____

Total Liquid Injection Rate (Include Recirculated and Make-up Rates) ____ gal/min or gal/1000 ft^3

Operating Pressure Drop Across Device ____ in H_2O

ANSWER FOLLOWING QUESTIONS FOR SPECIFIC DEVICE:

VENTURI SCRUBBER: Inlet Area ____ in^2 Throat Area ____ in^2 Throat Velocity ____ ft/sec

GRAVITY SPRAY CHAMBER: Number of Nozzles ____ Liquid Droplet Size ____ u Co-Current ____ Countercurrent ____

WET CYCLONE:

Body Diameter ____ in Length ____ in

Inlet Area ____ in^2 Number of Nozzles ____

Outlet Area ____ in^2

PACKED TOWER OR PLATE TOWER:

Cross-Sectional Area ____ ft^2 Type of Plate ____

Length ____ ft Depth of Packing ____ ft

Number of Plates ____ Type of Packing ____

OTHER WET COLLECTION DEVICES: GIVE COMPLETE DESCRIPTION INCLUDING DESIGN PARAMETERS AND DETAILED ENGINEERING DRAWINGS.

Signature: ____ Title: ____

V. SUPPLEMENTARY DATA FOR DRY COLLECTION DEVICES

Attach detailed engineering drawings of the control device and particle size versus removal efficiency curves.

BAGHOUSES: Cloth Area _____ ft^2

Bag Material _____

Number of Compartments _____

Pressure - Drop Total _____ in H_2O

Method of Cleaning _____

Air-to-Cloth Ratio _____ ft/min

Time Between Cleaning _____ mins, hrs

ELECTROSTATIC PRECIPITATORS:

GENERAL:

Effective Area of Grounded Collector Plates _____ ft^2

Number of Compartments or Chambers _____ Number of Cells per Compartment _____

Electrical Field Gradient at the Discharge or Emitting Electrodes _____ KV/in

Average Electrical Field Gradient at the the Grounded Collecting Electrodes _____ KV/in

Fields of Treatment _____ Potential Applied to Emitting Wires _____ KV

SINGLE STAGE TYPE:

Distance Between Emitting Wires and Collecting Plates _____ in.

Number of Isolatable Bus Sections _____ Corona Power _____ Watts/1000 cfm

TWO STAGE TYPE:

Distance Between First Stage Emitting Electrodes and Field Receiver Electrodes (Ground) _____ in

Potential Applied to Second Stage Emitting Plates _____ KV

Distance Between Second Stage Emitting Plates and Grounded Collection Plates _____ in

CYCLONES/MULTICYCLONES:

Simple Cyclone

Diameter _____ in

Inlet Dimensions _____

Outlet Dimensions _____

Pressure Drop _____ in H_2O

Number of Cyclones _____

Multicyclone

Diameter _____ in

Inlet Dimensions of Individual Cyclone _____

Outlet Dimensions of Individual Cyclone _____

Pressure Drop _____ in H_2O

Number of Cyclones _____

OTHER DRY COLLECTION DEVICES: GIVE COMPLETE DETAILED ENGINEERING DESCRIPTION AND DRAWINGS.

Signature: _____ Title: _____

Boiler 16

VI. AREA DIAGRAM

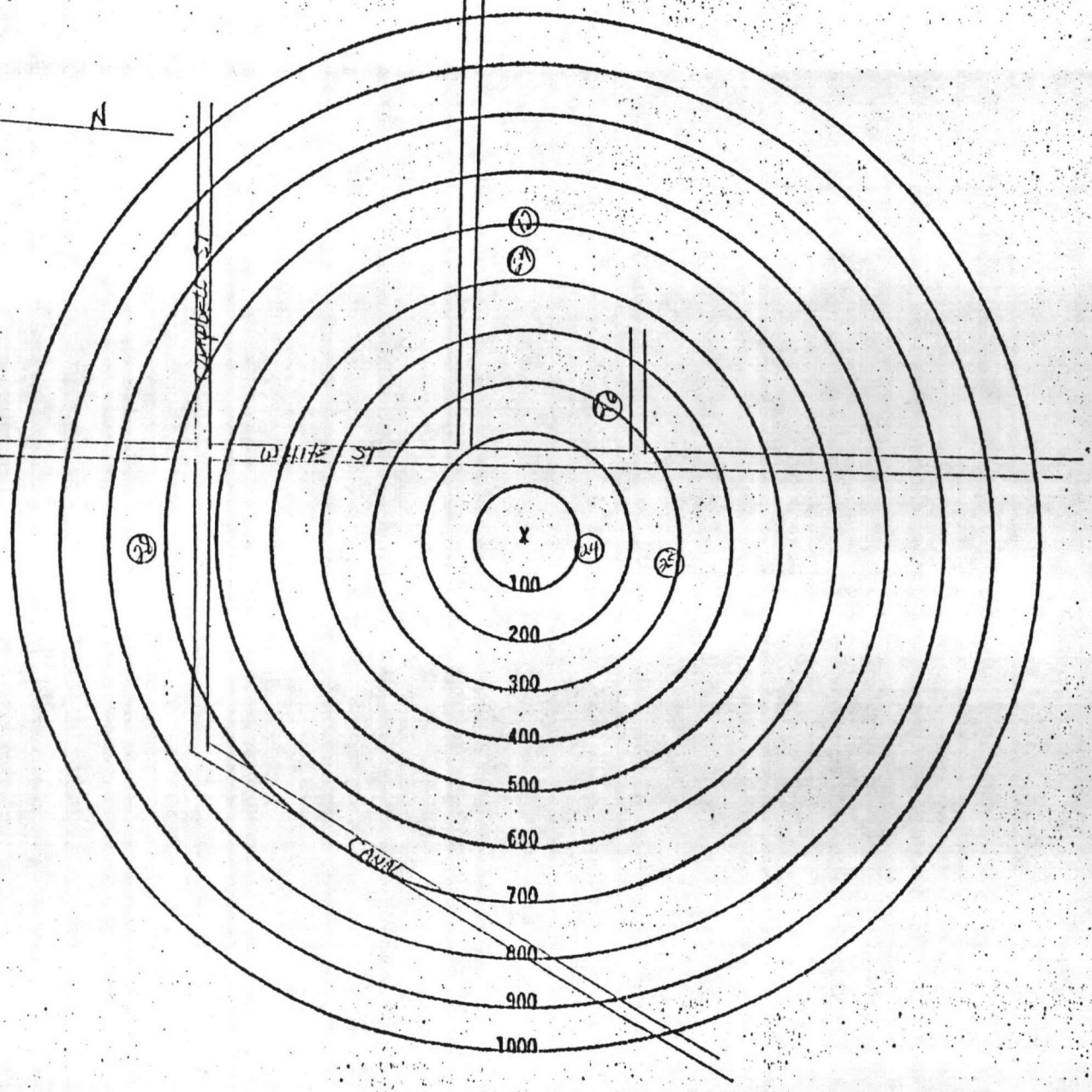

Owner Marine Corps Base, Camp Lejeune, N.C.

Location White St., New River Air Station
(Give Street Address)

INSTRUCTIONS:

1. Show all surrounding buildings and roads within 1000 feet of subject equipment which is located at center of circles.
2. Indicate location and type of building by the use of small numbered circles with the description below.
3. Show roads as lines representing the road edges. Indicate street names and highway numbers.
4. Show wooded or cleared areas by approximate boundary lines and the words "woods", "cleared", "cornfield", etc.
5. Indicate diraction of north by arrow.

CODE	DESCRIPTION
1	12 Sewage Lift Statio.
2	24 Shed
3	25 Avionics Shop
4	26 Engine Test Shop
5	27 Maintenance Hanger
6	28 Fuel Tanks
7	
8	
9	
10	

EXAMPLE 1 Church
2 Residence

X Indicates location of equipment.

BOILER # 17

NORTH CAROLINA

ENVIRONMENTAL MANAGEMENT COMMISSION

RALEIGH

APPLICATION FOR

A "PERMIT"

TO CONSTRUCT AND OPERATE AIR

POLLUTION ABATEMENT FACILITIES AND/OR EMISSION SOURCES

Filed By: Major General D. B. Barker
(Name)

Marine Corps Base
(Address)

Camp Lejeune, North Carolina

AQ-22

APPLICATION INSTRUCTIONS

THIS APPLICATION IS SUBJECT TO REJECTION UNLESS ALL REQUIRED INFORMATION IS SUBMITTED

1. ATTACH DETAILED ENGINEERING DRAWINGS OF SOURCE(S), PROCESS(ES) AND COLLECTION DEVICE(S) AS REQUESTED IN EACH SECTION. IF MULTIPLE SOURCES OR DEVICES, USE ADDENDUM SHEETS AS NECESSARY.

2. Submit application, detailed engineering drawings, specifications and other supporting data and documents in TRIPLICATE.

3. Attach additional sheets as necessary to complete any portion of the application.

4. The application MUST BE SIGNED by the RESPONSIBLE INDIVIDUAL of the company that is to PURCHASE AND OPERATE the facilities for which a Permit is applied.

5. ALL APPLICANTS MUST COMPLETE THE FIRST PAGE AND SECTIONS I AND VI.

6. If an Incinerator, Fuel Burning Source, Wet Collection Device or Dry Collection Device is to be installed and operated, COMPLETE SECTIONS II, III, IV or V respectively.

7. All applications should be mailed to: ENVIRONMENTAL MANAGEMENT COMMISSION
AIR QUALITY SECTION
P. O. Box 27687
Raleigh, North Carolina 27611

APPLICATION FOR A "PERMIT"
To Construct and Operate Air Pollution Abatement Facilities and/or Emission Sources
Three Copies to be Submitted
Fourth Copy Should be Retained by Applicant

Date: 24 September 1980

In accordance with the provisions of Article 21 of Chapter 143, General Statutes of North Carolina as amended, application is hereby made by Marine Corps Base, Camp Lejeune, North Carolina
(Name of Company, Establishment, Town, Etc.) (Include Division or Plant Name in Addition to Parent Company if Applicable) in the County of Onslow at Jacksonville, North Carolina
(Street and City or Town Address of Plant or Facility)
for issuance of a "Permit" to construct and operate air pollution abatement facilities and/or emissions sources at above location as specified in the accompanying drawings, specifications, and other pertinent data:

1. Nature of Operation Conducted at the Above Facility: Military Operation

2. Description of Process(es) Whose Emission(s) is/are to be Controlled by the Facility or Source(s) Which is/are to be Constructed or Altered. (Complete Section I)

Boiler, No. 6 Fuel Oil Boiler No. 17
Bldg No. AS-4151

3. Furnish Type and Narrative Description of Proposed Control Device(s).(Complete Appropriate Supplemental Data Sheets for Control Device to be Installed and/or Operated. Include Make and Model Number of Control Device(s) and Number of Identical Units).

No. 6 oil fired; no control device.

4.

Contaminant Emitted:	Weight Rate of Emissions (lb/hr): Without Control Device	With Control Device	Control Efficiency (%): Without Control Device	With Control Device
SO_x and Particulate	114.63	N/A	N/A	N/A

5. Name and Address of Engineering Firm that Prepared Plans:

6. Ultimate Disposition of Collected Pollutants:
None

7. Date on Which Facilities are to be Completed and in Operation:
October, 19 80

8. Indicate Period of Time for Which Facilities are Estimated to be Adequate: 20 Years

9. Estimate Cost of Air Pollution Control Device $ 0

10. Hours Facility is Operated Per Year: 8,760

Name: Major General D. B. Barker, USMC
(Responsible Individual of Company Purchasing/Operating Facility...PLEASE PRINT)

Mailing Address: Marine Corps Base
Camp Lejeune
North Carolina 28542

Signature and Title: DB Barker
D. B. BARKER, MAJOR GENERAL, USMC
Commanding General

Telephone Number: 451-5024

AQ-22

I. GENERAL DATA FOR PROCESSES

*Attach detailed process engineering drawings, equipment drawings and flow diagrams for the process(es) or source(s) being constructed or altered.

Name of Process: Heating and Steam Plant

Total Weight of Materials Entering this Process: 327 gals ~~lb~~/hr or ton/hr

Volume and Temperature of Air Flow Entering Control Device: _____ CFM @ _____ °F

Volume and Temperature of Effluent at Discharge Point to Atmosphere: _____ CFM @ _____ °F

Pollutant(s) to be Controlled: _____

Height of Process Stack or Vent Above Ground Level 43 ft. Inside area of Stack 8.9 ft^2.

Particulate Emission Rate (Before Control) 8.044 lb/hr

Particle Size Distribution: 0-5μ____%, 5-10μ____%, 10-20μ____%, 20-30μ____%, 30-40μ____%, 40-50μ____%, >50μ____%

Gaseous Emission(s): Name (Chemical Formula)	μg/m³, PPM	or lb/hr
SO_x		106.59

II. SUPPLEMENTARY DATA FOR INCINERATORS (Including Conical Incinerators)

Circle Type of Waste or Indicate Composition: Type 0 Type I Type II Type III Type IV

Combustible: _____% Non-Combustible: _____% Moisture: _____% Heat Value: _____BTU/lb

Total Waste Generated Per Day: _____ lb. Hours Incinerator will be Operated: _____ hrs/day

Design Capacity for Above Waste: _____ lbs/hr Manufacturer and Model Number; Approximate Cost: _____

Primary Chamber Volume: _____ $ft.^3$ Secondary Chamber Volume: _____ $ft.^3$

Air Requirements: Total Excess Air ____% Draft: Natural ____ Induced ____ Other ____

Overfire Air: ____cfm Underfire Air: ____cfm

Is there an Electronically Controlled, Exhaust Gas Temperature Modulated, Damper Installed on the Conical Incinerator for: Overfire Air Supply____, Underfire Air Supply____, Dome____ Temperature Set Point____°F

Flame Port Temperature: _____ °F Secondary Chamber Temperature: _____ °F

Is there a Continuous Exhaust Gas Temperature Recorder? Yes____ No____

Stack:

Inside Area ____$ft.^2$ Height ____ft. Gas Velocity ____ft/sec Temperature ____°F Fan Capacity ____cfm Stack Lined? _____

Is there a Wet Scrubber?

Yes ____ No ____ Flow Rate of H_2O into Scrubber ____gal/min Temperature Before Scrubber ____°F

Aux. Fuel: Oil _____ Gas _____ Other _____ Burner Rating: Primary Chamber _____BTU/hr Secondary Chamber _____BTU/hr Stack _____BTU/hr

Primary Burner: Is there a Preheat Timer? Yes ____ No ____ Preheating Time: _____min.

Secondary Burner or Afterburner: Is there a Timer? Yes ____ No ____ Length of Time Burner is Operated _____min.

Is the Timer Reset by Charging Door? Yes ____ No ____ Other Mode of Burner Control _____

Type of Feed: Manual _____ Automatic _____ If Automatic, Describe _____

Distance from Incinerator to Nearest Structure(s) in which People Live and/or Work._____ft.

Signature: _____ Title: _____

III. SUPPLEMENTARY DATA FOR FUEL BURNING SOURCES

*Attach detailed dimensioned drawing or sketch showing internal features of dryers, wood or coal fired boilers, and recovery boilers.

Type of Fuel Burning Source Boiler Stack Height Above Ground Level 43 ft. Inside Area of Stack 8.9 ft^2

Make and Model Number Trane Murray Co. Ser. 10735 Volume of Furnace ____ ft^3

Specify Actual Amount of Each Fuel Used in Above Source (s):

Coal ____ lb/hr; Oil Grade 6 Amount 327 gal/hr, at 146,900 BTU/gal and ____ lb/gal or ____ lb/hr

Wood ____ lb/hr; Natural Gas ____ SCF/hr, at ____ BTU/SCF; Other ____

(Specify type, amount and heating value)

Specify Maximum Rating for Each Fuel Burning Source:

Coal ____ Oil 327 Wood ____ Natural Gas ____ Other ____

Maximum Sulfur Content of Fuel 2.05 % Specify Standby Fuel None Maximum % Sulfur ____

Type of Solid Fuel Burning Equipment Used: Hand Fired ___ Spreader Stoker ___ Underfeed Stoker ___ Chain Grate ___

Traveling Grate ___ Pulverizer ___ Cyclone Furnace ___ Other (Specify) ____

Ash Content of Fuel: Specify Method and Schedule of Tube Cleaning, if Applicable:

Coal ____ % Wood ____ % Other ____ % Lancing ____ Tube Blowing ____ Schedule ____

Emission Control Equipment (Describe in Detail in Sections IV and V)

Collection Device: Wet ___ Dry ___ Steam Injection ___ Air Injection ___ Is Collected Flyash Reinjected? ___

Draft on Boiler (Natural ____ Induced X) ____ cfm at ____ °F

Total Number of Fuel Burning Sources Within Property Boundaries: 3

Maximum Capacity Rating, by Type, for All Fuel Burning Units Excluding that Itemized Above: (Total Like Units) 2

Coal ____ lb/hr Wood ____ lb/hr Oil 654 gal/hr Natural Gas ____ SCF/hr

IV. SUPPLEMENTARY DATA FOR WET COLLECTION DEVICES

*Attach detailed engineering drawings of the control device and particle size versus removal efficiency curves.

Liquid Scrubbing Medium and Additives: ____

Total Liquid Injection Rate (Include Recirculated and Make-up Rates) ____ gal/min or gal/1000 ft^3

Operating Pressure Drop Across Device ____ in H_2O

ANSWER FOLLOWING QUESTIONS FOR SPECIFIC DEVICE:

VENTURI SCRUBBER: Inlet Area ____ in^2 Throat Area ____ in^2 Throat Velocity ____ ft/sec

GRAVITY SPRAY CHAMBER: Number of Nozzles ____ Liquid Droplet Size ____ u Co-Current ____ Countercurrent ____

WET CYCLONE:

Body Diameter ____ in Length ____ in

Inlet Area ____ in^2 Number of Nozzles ____

Outlet Area ____ in^2

PACKED TOWER OR PLATE TOWER:

Cross-Sectional Area ____ ft^2 Type of Plate ____

Length ____ ft Depth of Packing ____ ft

Number of Plates ____ Type of Packing ____

OTHER WET COLLECTION DEVICES: GIVE COMPLETE DESCRIPTION INCLUDING DESIGN PARAMETERS AND DETAILED ENGINEERING DRAWINGS.

Signature: ____ Title: ____

V. SUPPLEMENTARY DATA FOR DRY COLLECTIO. EVICES

*Attach detailed engineering drawings of the control device and particle size versus removal efficiency curves.

BAGHOUSES: Cloth Area _____ ft^2

Number of Compartments _____

Method of Cleaning _____

Time Between Cleaning _____ mins, hrs

Bag Material _____

Pressure - Drop Total _____ in H_2O

Air-to-Cloth Ratio _____ ft/min

ELECTROSTATIC PRECIPITATORS:

GENERAL:

Effective Area of Grounded Collector Plates _____ ft^2

Number of Compartments or Chambers _____ Number of Cells per Compartment _____

Electrical Field Gradient at the Discharge or Emitting Electrodes _____ KV/in

Average Electrical Field Gradient at the the Grounded Collecting Electrodes _____ KV/in

Fields of Treatment _____ Potential Applied to Emitting Wires _____ KV

SINGLE STAGE TYPE:

Distance Between Emitting Wires and Collecting Plates _____ in.

Number of Isolatable Bus Sections _____ Corona Power _____ Watts/1000 cfm

TWO STAGE TYPE:

Distance Between First Stage Emitting Electrodes and Field Receiver Electrodes (Ground) _____ in

Potential Applied to Second Stage Emitting Plates _____ KV

Distance Between Second Stage Emitting Plates and Grounded Collection Plates _____ in

CYCLONES/MULTICYCLONES:

Simple Cyclone

Diameter _____ in

Inlet Dimensions _____

Outlet Dimensions _____

Pressure Drop _____ in H_2O

Number of Cyclones _____

Multicyclone

Diameter _____ in

Inlet Dimensions of Individual Cyclone _____

Outlet Dimensions of Individual Cyclone _____

Pressure Drop _____ in H_2O

Number of Cyclones _____

OTHER DRY COLLECTION DEVICES: GIVE COMPLETE DETAILED ENGINEERING DESCRIPTION AND DRAWINGS.

Signature: _____ Title: _____

VI. AREA DIAGRAM

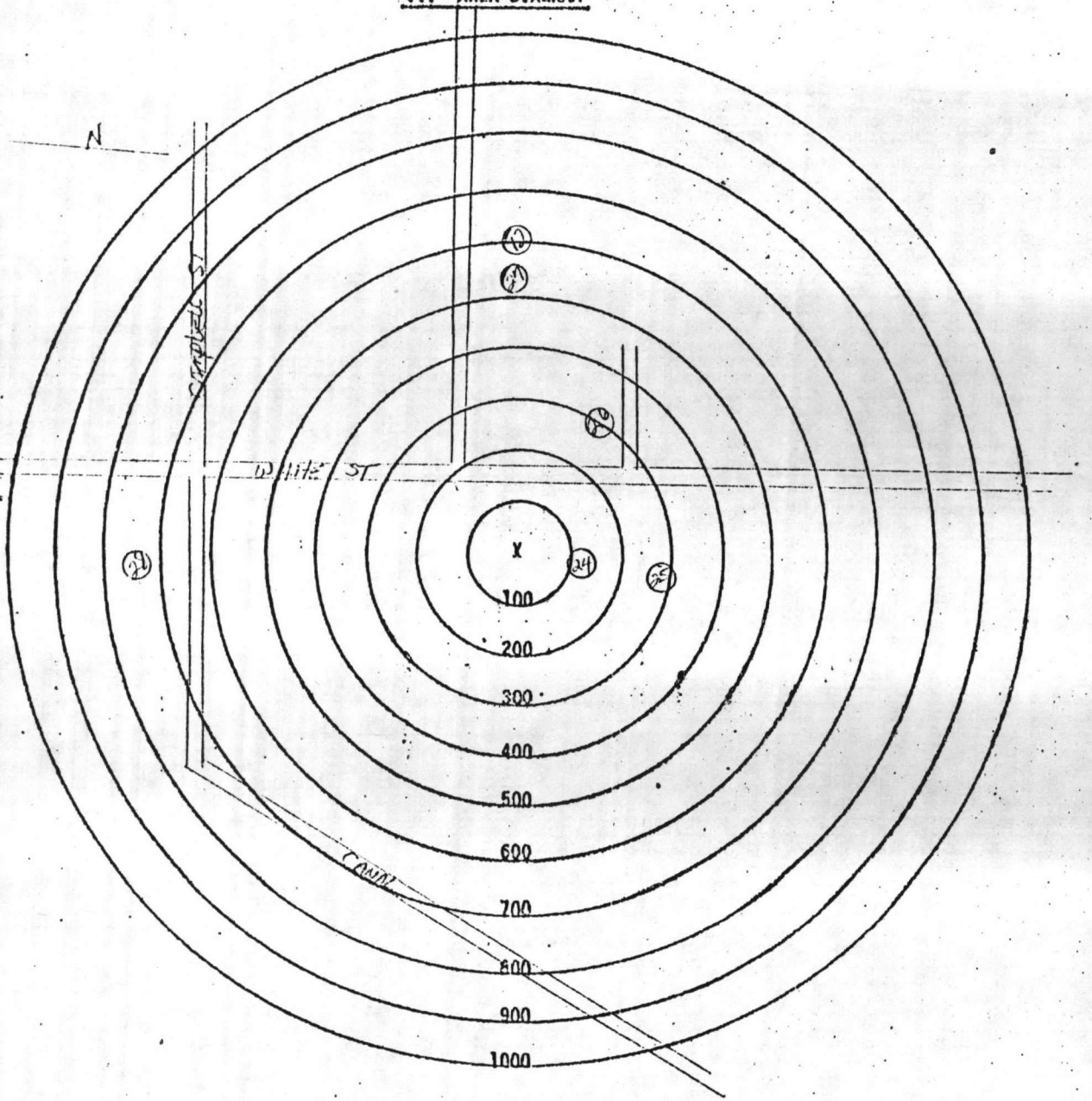

Owner Marine Corps Base, Camp Lejeune, N.C.

Location White St., New River Air Station
(Give Street Address)

INSTRUCTIONS:

1. Show all surrounding buildings and roads within 1000 feet of subject equipment which is located at center of circles.
2. Indicate location and type of building by the use of small numbered circles with the description below.
3. Show roads as lines representing the road edges. Indicate street names and highway numbers.
4. Show wooded or cleared areas by approximate boundary lines and the words "woods", "cleared", "cornfield", etc.
5. Indicate diraction of north by arrow.

CODE	DESCRIPTION
1	12 Sewage Lift Station
2	24 Shed
3	25 Avionics Shop
4	26 Engine Test Shop
5	27 Maintenance Hanger
6	28 Fuel Tanks
7	
8	
9	
10	

EXAMPLE
1. Church
2. Residence

X Indicates location of equipment.

BOILER #18

NORTH CAROLINA

ENVIRONMENTAL MANAGEMENT COMMISSION

RALEIGH

RECEIVED
NOV 3 1980
WILMINGTON REGIONAL OFFICE
DEM

TM

APPLICATION FOR

A "PERMIT"

TO CONSTRUCT AND OPERATE AIR

POLLUTION ABATEMENT FACILITIES AND/OR EMISSION SOURCES

Filed By: Major General D. B. Barker
(Name)

Marine Corps Base
(Address)

Camp Lejeune, North Carolina

AQ-22

APPLICATION INSTRUCTIONS

THIS APPLICATION IS SUBJECT TO REJECTION UNLESS ALL REQUIRED INFORMATION IS SUBMITTED

1. ATTACH DETAILED ENGINEERING DRAWINGS OF SOURCE(S), PROCESS(ES) AND COLLECTION DEVICE(S) AS REQUESTED IN EACH SECTION. IF MULTIPLE SOURCES OR DEVICES, USE ADDENDUM SHEETS AS NECESSARY.

2. Submit application, detailed engineering drawings, specifications and other supporting data and documents in TRIPLICATE.

3. Attach additional sheets as necessary to complete any portion of the application.

4. The application MUST BE SIGNED by the RESPONSIBLE INDIVIDUAL of the company that is to PURCHASE AND OPERATE the facilities for which a Permit is applied.

5. ALL APPLICANTS MUST COMPLETE THE FIRST PAGE AND SECTIONS I AND VI.

6. If an Incinerator, Fuel Burning Source, Wet Collection Device or Dry Collection Device is to be installed and operated, COMPLETE SECTIONS II, III, IV or V respectively.

7. All applications should be mailed to: ENVIRONMENTAL MANAGEMENT COMMISSION
AIR QUALITY SECTION
P. O. Box 27687
Raleigh, North Carolina 27611

APPLICATION FOR A "PERMIT"
To Construct and Operate Air Pollution Abatement Facilities and/or Emission Sources
Three Copies to be Submitted
Fourth Copy Should be Retained by Applicant

Date: 24 September 1980

In accordance with the provisions of Article 21 of Chapter 143, General Statutes of North Carolina as amended, application is hereby made by Marine Corps Base, Camp Lejeune, North Carolina
(Name of Company, Establishment, Town, Etc.) (Include Division or Plant Name in Addition to Parent Company if Applicable) in the County of Onslow at Jacksonville, North Carolina
(Street and City or Town Address of Plant or Facility)
for issuance of a "Permit" to construct and operate air pollution abatement facilities and/or emissions sources at above location as specified in the accompanying drawings, specifications, and other pertinent data:

1. Nature of Operation Conducted at the Above Facility: Military Operation

2. Description of Process(es) Whose Emission(s) is/are to be Controlled by the Facility or Source(s) Which is/are to be Constructed or Altered. (Complete Section I)
Boiler, No. 6 Fuel Oil Boiler No. 18
Bldg No. AS-4151

3. Furnish Type and Narrative Description of Proposed Control Device(s).(Complete Appropriate Supplemental Data Sheets for Control Device to be Installed and/or Operated. Include Make and Model Number of Control Device(s) and Number of Identical Units).
No. 6 oil fired, No control device.

4.

Contaminant Emitted:	Weight Rate of Emissions (lb/hr): Without Control Device	With Control Device	Control Efficiency (%): Without Control Device	With Control Device
SO_x and Particultes	114.63 lb/hr	N/A	N/A	N/A

5. Name and Address of Engineering Firm that Prepared Plans:

6. Ultimate Disposition of Collected Pollutants:
None

7. Date on Which Facilities are to be Completed and in Operation:
October, 19 80

8. Indicate Period of Time for Which Facilities are Estimated to be Adequate: 20 Years

9. Estimate Cost of Air Pollution Control Device $ 0

10. Hours Facility is Operated Per Year: 8,760

Name: Major General D. B. Barker, USMC
(Responsible Individual of Company Purchasing/ Operating Facility...PLEASE PRINT)

Mailing Address: Marine Corps Base
Camp Lejeune
North Carolina 28542

Signature and Title: DB Barker
D. B. BARKER, MAJOR GENERAL, USMC
Commanding General

Telephone Number: 451-5024

AQ-22

I. GENERAL DATA FOR PROCESSES

*Attach detailed process engineering drawings, equipment drawings and flow diagrams for the process(es) or source(s) being constructed or altered.

Name of Process: Heating and Steam Plant

Total Weight of Materials Entering this Process: 327 gals~~xx~~/hr ~~xxxxxx~~

Volume and Temperature of Air Flow Entering Control Device: _____ CFM @ _____ °F

Volume and Temperature of Effluent at Discharge Point to Atmosphere: _____ CFM @ _____ °F

Pollutant(s) to be Controlled: _____

Height of Process Stack or Vent Above Ground Level 43 ft. Inside area of Stack 8.9 ft^2.

Particulate Emission Rate (Before Control) 8.044 lb/hr

Particle Size Distribution: 0-5μ____%, 5-10μ____%, 10-20μ____%, 20-30μ____%, 30-40μ____%, 40-50μ____%, >50μ____%

Gaseous Emission(s): Name (Chemical Formula)	μg/m³, PPM	or lb/hr
SO_x		106.59

II. SUPPLEMENTARY DATA FOR INCINERATORS (Including Conical Incinerators)

Circle Type of Waste or Indicate Composition: Type 0 Type I Type II Type III Type IV

Combustible: ____% Non-Combustible: ____% Moisture: ____% Heat Value: ____BTU/lb

Total Waste Generated Per Day: _____ lb. Hours Incinerator will be Operated: _____ hrs/day

Design Capacity for Above Waste: _____ lbs/hr Manufacturer and Model Number; Approximate Cost: _____

Primary Chamber Volume: _____ $ft.^3$ Secondary Chamber Volume: _____ $ft.^3$

Air Requirements: Total Excess Air ____% Draft: Natural ____ Induced ____ Other ____

Overfire Air: ____cfm Underfire Air: ____cfm

Is there an Electronically Controlled, Exhaust Gas Temperature Modulated, Damper Installed on the Conical Incinerator for: Overfire Air Supply____, Underfire Air Supply____, Dome____ Temperature Set Point____°F

Flame Port Temperature: _____ °F Secondary Chamber Temperature: _____ °F

Is there a Continuous Exhaust Gas Temperature Recorder? Yes____ No____

Stack:

Inside Area ____$ft.^2$ Height ____ft. Gas Velocity ____ft/sec Temperature ____°F Fan Capacity ____cfm Stack Lined? _____

Is there a Wet Scrubber?

Yes ____ No ____ Flow Rate of H_2O into Scrubber ____gal/min Temperature Before Scrubber ____°F

Aux. Fuel: Oil _____ Gas _____ Other _____ Burner Rating: Primary Chamber _____BTU/hr Secondary Chamber _____BTU/hr Stack _____BTU/hr

Primary Burner: Is there a Preheat Timer? Yes ____ No ____ Preheating Time: _____min.

Secondary Burner or Afterburner: Is there a Timer? Yes ____ No ____ Length of Time Burner is Operated _____min.

Is the Timer Reset by Charging Door? Yes ____ No ____ Other Mode of Burner Control _____

Type of Feed: Manual _____ Automatic _____ If Automatic, Describe _____

Distance from Incinerator to Nearest Structure(s) in which People Live and/or Work ____ft.

Signature: _____ Title: _____

III. SUPPLEMENTARY DATA FOR FUEL BURNING SOURCES

Attach detailed dimensioned drawing or sketch showing internal features of dryers, wood or coal fired boilers, and recovery boilers.

Type of Fuel Burning Source Boiler Stack Height Above Ground Level 43 ft. Inside Area of Stack 8.9 ft^2

Make and Model Number Trane Murray Company Ser 10736 Volume of Furnace ____ ft^3

Specify Actual Amount of Each Fuel Used in Above Source (s):

Coal ____ lb/hr; Oil Grade 6 Amount 327 gal/hr, at 146,900 BTU/gal and ____ lb/gal or ____ lb/hr

Wood ____ lb/hr; Natural Gas ____ SCF/hr, at ____ BTU/SCF; Other ____

(Specify type, amount and heating value)

Specify Maximum Rating for Each Fuel Burning Source:

Coal ____ Oil 327 Wood ____ Natural Gas ____ Other ____

Maximum Sulfur Content of Fuel 2.05% Specify Standby Fuel None Maximum % Sulfur ____

Type of Solid Fuel Burning Equipment Used: Hand Fired ___ Spreader Stoker ___ Underfeed Stoker ___ Chain Grate ___

Traveling Grate ___ Pulverizer ___ Cyclone Furnace ___ Other (Specify) ____

Ash Content of Fuel:

Coal ____ % Wood ____ % Other ____ %

Specify Method and Schedule of Tube Cleaning, if Applicable:

Lancing ____ Tube Blowing ____ Schedule ____

Emission Control Equipment (Describe in Detail in Sections IV and V)

Collection Device: Wet ____ Dry ____ Steam Injection ____ Air Injection ____ Is Collected Flyash Reinjected? ____

Draft on Boiler (Natural ____ Induced X) ____ cfm at ____ °F

Total Number of Fuel Burning Sources Within Property Boundaries: 3

Maximum Capacity Rating, by Type, for All Fuel Burning Units Excluding that Itemized Above: (Total Like Units) 2

Coal ____ lb/hr Wood ____ lb/hr Oil 654 gal/hr Natural Gas ____ SCF/hr

IV. SUPPLEMENTARY DATA FOR WET COLLECTION DEVICES

Attach detailed engineering drawings of the control device and particle size versus removal efficiency curves.

Liquid Scrubbing Medium and Additives: ____

Total Liquid Injection Rate (Include Recirculated and Make-up Rates) ____ gal/min or gal/1000 ft^3

Operating Pressure Drop Across Device ____ in H_2O

ANSWER FOLLOWING QUESTIONS FOR SPECIFIC DEVICE:

VENTURI SCRUBBER: Inlet Area ____ in^2 Throat Area ____ in^2 Throat Velocity ____ ft/sec

GRAVITY SPRAY CHAMBER: Number of Nozzles ____ Liquid Droplet Size ____ u Co-Current ____ Countercurrent ____

WET CYCLONE:

Body Diameter ____ in Length ____ in

Inlet Area ____ in^2 Number of Nozzles ____

Outlet Area ____ in^2

PACKED TOWER OR PLATE TOWER:

Cross-Sectional Area ____ ft^2 Type of Plate ____

Length ____ ft Depth of Packing ____ ft

Number of Plates ____ Type of Packing ____

OTHER WET COLLECTION DEVICES: GIVE COMPLETE DESCRIPTION INCLUDING DESIGN PARAMETERS AND DETAILED ENGINEERING DRAWINGS.

Signature: ____ Title: ____

V. SUPPLEMENTARY DATA FOR DRY COLLECTION DEVICES

Attach detailed engineering drawings of the control device and particle size versus removal efficiency curves.

BAGHOUSES: Cloth Area _____ ft^2

Bag Material _____

Number of Compartments _____

Pressure - Drop Total _____ in H_2O

Method of Cleaning _____

Air-to-Cloth Ratio _____ ft/min

Time Between Cleaning _____ mins, hrs

ELECTROSTATIC PRECIPITATORS:

GENERAL:

Effective Area of Grounded Collector Plates _____ ft^2

Number of Compartments or Chambers _____ Number of Cells per Compartment _____

Electrical Field Gradient at the Discharge or Emitting Electrodes _____ KV/in

Average Electrical Field Gradient at the the Grounded Collecting Electrodes _____ KV/in

Fields of Treatment _____ Potential Applied to Emitting Wires _____ KV

SINGLE STAGE TYPE:

Distance Between Emitting Wires and Collecting Plates _____ in.

Number of Isolatable Bus Sections _____ Corona Power _____ Watts/1000 cfm

TWO STAGE TYPE:

Distance Between First Stage Emitting Electrodes and Field Receiver Electrodes (Ground) _____ in

Potential Applied to Second Stage Emitting Plates _____ KV

Distance Between Second Stage Emitting Plates and Grounded Collection Plates _____ in

CYCLONES/MULTICYCLONES:

Simple Cyclone

Diameter _____ in

Inlet Dimensions _____

Outlet Dimensions _____

Pressure Drop _____ in H_2O

Number of Cyclones _____

Multicyclone

Diameter _____ in

Inlet Dimensions of Individual Cyclone _____

Outlet Dimensions of Individual Cyclone _____

Pressure Drop _____ in H_2O

Number of Cyclones _____

OTHER DRY COLLECTION DEVICES: GIVE COMPLETE DETAILED ENGINEERING DESCRIPTION AND DRAWINGS.

Signature: _____ Title: _____

Boiler 18

VI. AREA DIAGRAM

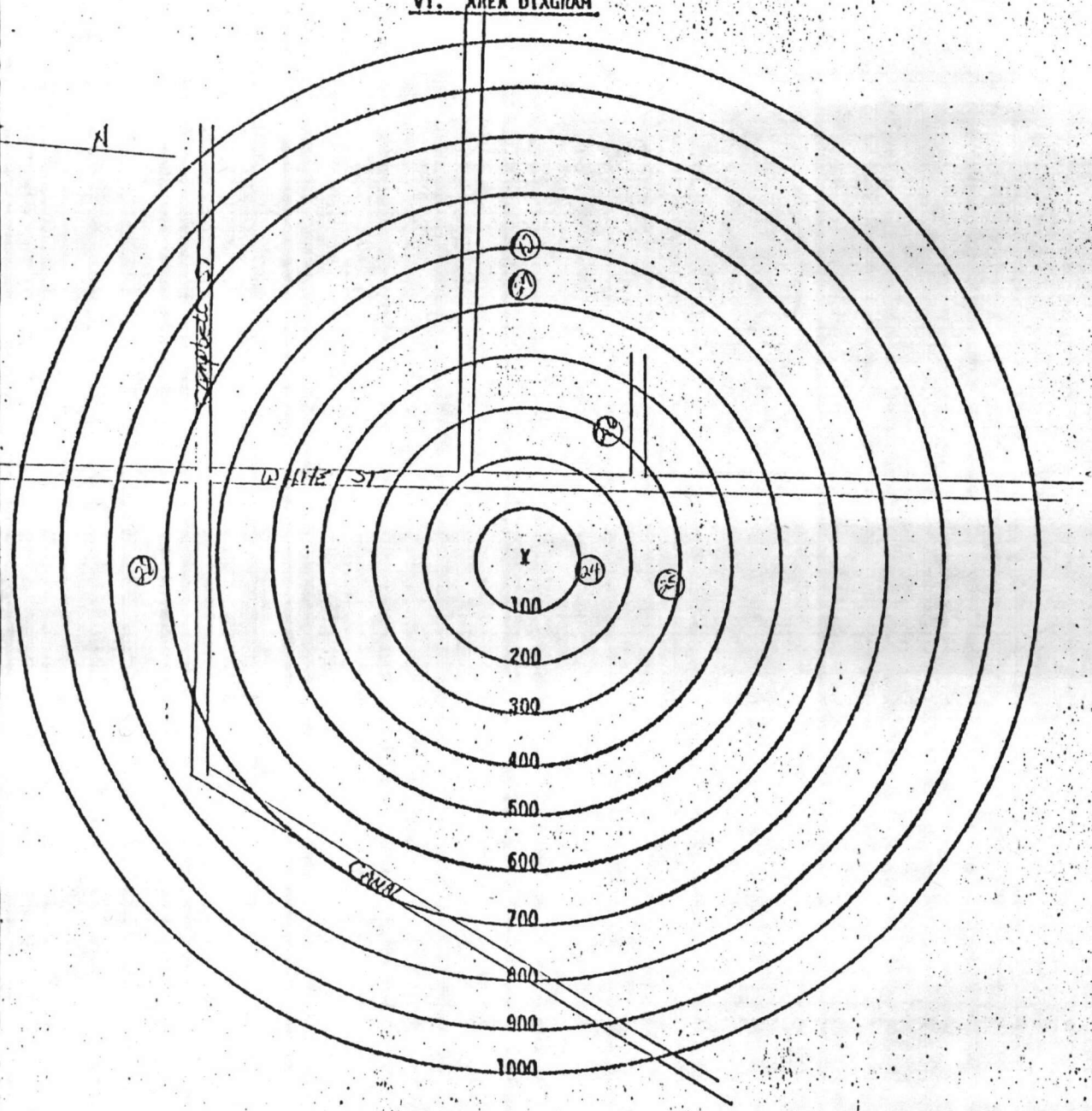

Owner Marine Corps Base, Camp Lejeune, N.C.

Location White St. New River Air Station
(Give Street Address)

INSTRUCTIONS:

1. Show all surrounding buildings and roads within 1000 feet of subject equipment which is located at center of circles.
2. Indicate location and type of building by the use of small numbered circles with the description below.
3. Show roads as lines representing the road edges. Indicate street names and highway numbers.
4. Show wooded or cleared areas by approximate boundary lines and the words "woods", "cleared", "cornfield", etc.
5. Indicate direction of north by arrow.

CODE	DESCRIPTION
1	12 Sewage Lift Static
2	24 Shed
3	25 Avionics Shop
4	26 Engine Test Shop
5	27 Maintenance Hanger
6	28 Fuel Tanks
7	
8	
9	
10	

EXAMPLE
1 Church
2 Residence

X Indicates location of equipment.

North Carolina Department of Natural Resources & Community Development
James B. Hunt, Jr., Governor Joseph W. Grimsley, Secretary

DIVISION OF ENVIRONMENTAL MANAGEMENT

July 30, 1982

Mr. K. P. Millice, Jr.
Colonel, U.S. Marine Corps
Assistant Chief of Staff, Facilities
Marine Corps Base
Camp Lejeune, North Carolina 28542

Subject: Permit No. 3769R4
Marine Corps Base
Camp Lejeune, North Carolina

Dear Colonel Millice:

In accordance with your application received June 23, 1982, we are forwarding herewith Permit No. 3769R4 to Marine Corps Base, Camp Lejeune, North Carolina for the construction and/or operation of air pollution abatement facilities and/or emission sources.

If any parts, requirements, or limitations contained in this permit are unacceptable to you, you have the right to an adjudicatory hearing before a hearing officer upon written demand to the Director within thirty (30) days following receipt of this permit, identifying the specific issues to be contended. Unless such demand is made, this permit shall be final and binding.

This permit shall be effective from the date of issuance until July 1, 1985, is nontransferable to future owners and operators, and shall be subject to the conditions and limitations as specified therein.

Sincerely,

Charles Wakild
Regional Supervisor

CW:WC:cb
Enclosures
cc: Mike Sewell
Robert Jamieson
Wilmington Regional Office
Central Files

Wilmington Regional Office 7225 Wrightsville Avenue, Wilmington, N. C. 28403 Telephone 919/256-4161

NORTH CAROLINA

ENVIRONMENTAL MANAGEMENT COMMISSION

DEPARTMENT OF NATURAL RESOURCES & COMMUNITY DEVELOPMENT

Raleigh

P E R M I T

For the Discharge of Air Contaminants Into the Atmosphere

In accordance with the provisions of Article 21B of Chapter 143, General Statutes of North Carolina as amended, and other applicable Laws, Rules and Regulations,

PERMISSION IS HEREBY GRANTED TO

Marine Corps Base
Camp Lejeune, North Carolina

FOR THE

operation of a No. 6 oil fired boiler (121 x 10^6 BTU per hour heat input) and air cleaning devices and appurtenances consisting of two single stage, dry type electrostatic precipitators (plate area of 36,540 square feet each) in series with two multicyclones installed on the exhausts from four coal/No. 6 oil-fired boilers (maximum heat input of 114,500,000 BTU per hour each) to remove visible and particulate emissions, and for the discharge of the treated air and associated stack gases into the outdoor atmosphere at its facility located at Central Heating Plant, Hadnot Point, Camp Lejeune, North Carolina, Onslow County,

in accordance with the application received June 23, 1982, and in conformity with the plans, specifications, and other supporting data, all of which are filed with the Department of Natural Resources & Community Development and are incorporated as part of this Permit.

This permit shall be effective from the date of its issuance until July 1, 1985, is nontransferable to future owners and operators, and shall be subject to the following specified conditions and limitations:

1. The facility shall be properly operated and maintained at all times in such a manner as to effect an overall reduction in air pollution in keeping with the application and otherwise to reduce air contamination to the extent necessary to comply with applicable Environmental Management Regulations, including 15 NCAC 2D .0503, .0516, and .0521.

2. Reports on the operation and maintenance of the facility shall be submitted by the Permittee to the Division of Environmental Management at such intervals and in such form and detail as may be required by the Division. Information required in such reports may include, but is not limited to, process weight rates, firing rates, hours of operation, and preventive maintenance schedules.

3. When particulate and/or visible emissions, due to a malfunction of the process or control equipment, are or may be in excess of Environmental Management Regulations, the Regional Supervisor, Wilmington Region (919) 256-4161, of the Division of Environmental Management shall be notified as promptly as possible but in no case later than 12 hours following the start of such malfunction. Such notice shall specify the nature and cause of the malfunction, the time when such malfunction was first observed, the expected duration, and an estimate of the rate of emission. The term malfunction shall not be construed to include start-up or shut-down periods when these emissions exceed Environmental Management Regulations when the duration of such period is less than one hour. Furthermore, any period of duration one hour or greater when these emissions exceed Environmental Management Regulations shall be construed as a malfunction. This malfunction reporting requirement does not allow the operation of the facility in excess of Environmental Management Regulations.

4. The Permittee at least ninety (90) days prior to the expiration of this Permit shall request its extension by letter. The letter should include the permit number and a description of modifications, if any, that have been made.

5. This Permit is subject to revocation or modification upon a determination that information contained in the application or presented in support thereof is incorrect, conditions under which this Permit was granted have changed, or violations of conditions contained in this Permit have occurred.

6. A violation of any term or condition of this Permit shall subject the Permittee to enforcement procedures contained in North Carolina General Statutes 143-215.114, including assessment of civil penalties.

Permit issued this the 30th day of July, 1982.

NORTH CAROLINA ENVIRONMENTAL MANAGEMENT COMMISSION

Charles Wakild, Regional Supervisor
Division of Environmental Management
By Authority of the Environmental Management Commission

Permit No. 3769R4

send to region for action

UNITED STATES MARINE CORPS
MARINE CORPS BASE
CAMP LEJEUNE, NORTH CAROLINA 28542

IN REPLY REFER TO
MAIN/FEC/rn
11370
18 JUN 1982

RECEIVED
JUN 22 1982
AIR QUALITY
PERMITS & OPERATIONS

Director
Division of Environmental Management
Department of Natural and Economic Resources
P. O. Box 27687
Raleigh, NC 27611

Dear Sir:

In accordance with North Carolina Administrative Code, Title 15, Chapter 2, Subchapter 2H, Section .0603, application is hereby made for renewal of Permit Number 3769R3, covering operation of a Number 6 oil-fired boiler (121×10^6 BTU per hour heat input) and air cleaning devices and appurtenances consisting of two single stage, dry type electrostatic precipitators (plate area of 36,540 square feet each) in series with two multicyclones installed on the exhausts from four coal/Number 6 oil-fired boilers (maximum heat input of 114,500,000 BTU per hour each) to remove visible and particulate emissions, and for the discharge of the treated air and associated stack gases into the outdoor atmosphere at its facility located at Central Heating Plant, Hadnot Point, Camp Lejeune, North Carolina, Onslow County.

No modifications or alterations have been made to the permitted plant subsequent to the issuance of the original permit. Repair work that has been made to plant equipment includes replacement of the nonreturn valve (Boiler Number 5), replacement of electrical switchgear, straightening of precipitator electrodes, and replacement of various steam meters.

If you have any further questions on this matter, please contact Mr. Julian Wooten, Base Maintenance Division, telephone (919) 451-5003.

Sincerely,

K. P. Millice Jr.

K. P. MILLICE, JR.
Colonel
Assistant Chief of Staff, Facilities
By direction of the Commanding General

Copy to:
Dept of Nat Res & Comm Dev

North Carolina Department of Natural Resources & Community Development
James B. Hunt, Jr., Governor
Howard N. Lee, Secretary
DIVISION OF ENVIRONMENTAL MANAGEMENT

July 31, 1981

D.B. Barker
Major General, U.S. Marine Corps
Commanding
Marine Corps Base
Camp Lejeune, North Carolina 28542

Subject: Permit No. 3769R3
Marine Corps Base
Camp Lejeune, North Carolina

Dear General Barker:

In accordance with your application received June 22, 1981, we are forwarding herewith Permit No. 3769R3 to Marine Corps Base, Camp Lejeune, North Carolina for the construction and/or operation of air pollution abatement facilities and/or emission sources.

If any parts, requirements, or limitations contained in this permit are unacceptable to you, you have the right to an adjudicatory hearing before a hearing officer upon written demand to the Director within thirty (30) days following receipt of this permit, identifying the specific issues to be contended. Unless such demand is made, this permit shall be final and binding.

This permit shall be effective from the date of issuance until October 1, 1982, is nontransferable to future owners and operators, and shall be subject to the conditions and limitations as specified therein.

Sincerely,

Charles Wakild
Regional Supervisor

Enclosures

cc: Mike Sewell
Robert Jamieson
Wilmington Regional Office
Central Files

NORTH CAROLINA

ENVIRONMENTAL MANAGEMENT COMMISSION

DEPARTMENT OF NATURAL RESOURCES & COMMUNITY DEVELOPMENT

Raleigh

P E R M I T

For the Discharge of Air Contaminants Into the Atmosphere

In accordance with the provisions of Article 21B of Chapter 143, General Statutes of North Carolina as amended, and other applicable Laws, Rules and Regulations,

PERMISSION IS HEREBY GRANTED TO

Marine Corps Base
Camp Lejeune, North Carolina

FOR THE

operation of a No. 6 oil fired boiler (121 x 10^6 BTU per hour heat input) and air cleaning devices and appurtenances consisting of two single stage, dry type electrostatic precipitators (plate area of 36,540 square feet each) in series with two multicyclones installed on the exhausts from four coal/No. 6 oil-fired boilers (maximum heat input of 114,500,000 BTU per hour each) to remove visible and particulate emissions, and for the discharge of the treated air and associated stack gases into the outdoor atmosphere at its facility located at Central Heating Plant, Hadnot Point, Camp Lejeune, North Carolina, Onslow County,

in accordance with the application received June 22, 1981, and in conformity with the plans, specifications, and other supporting data, all of which are filed with the Department of Natural Resources & Community Development and are incorporated as part of this Permit.

This Permit shall be effective from the date of its issuance until October 1, 1982, is nontransferable to future owners and operators, and shall be subject to the following specified conditions and limitations:

1. The air cleaning devices shall be properly operated and maintained at all times in such a manner as to effect an overall reduction in air pollution in keeping with the application and otherwise to reduce air contamination to the extent necessary to comply with applicable Environmental Management Commission Regulations, including 15 NCAC 2D .0503, .0516, and .0521.

2. When particulate and/or visible emissions, due to a malfunction of the process or control equipment, are or may be in excess of Environmental Management Commission Regulations, the Regional Supervisor, Wilmington Region 919-256-4161, of the Division of Environmental Management shall be notified as promptly as possible but in no case later than twelve (12) hours following the start of such malfunction.

Such notice shall specify the nature and cause of the malfunction, the time when such malfunction was first observed, the expected duration, and an estimate of the rate of emission. The term malfunction shall not be construed to include start-up or shut-down periods when particulate, visible, or odorous emissions exceed Environmental Management Commission Regulations when the duration of such period is less than one hour. Furthermore, any period of duration one hour or greater when particulate, visible, or odorous emissions exceed Environmental Management Commission Regulations shall be construed as a malfunction.

3. Reports on the operation and maintenance of the facilities shall be submitted to the Division of Environmental Management at such intervals and in such form and detail as may be required by the Division. Information required in such reports may include, but is not limited to, process weight rates, firing rates, hours of operation, and preventive maintenance schedules.

4. Marine Corps Base, Camp Lejeune, at least ninety (90) days prior to the expiration of this Permit, shall request its extension by letter. The letter should include the permit number and a description of modifications, if any, that have been made.

5. This permit is subject to revocation or modification upon a determination that information contained in the application or presented in support thereof is incorrect, conditions under which the permit renewal was granted have changed, or violations of conditions contained in the permit have occurred.

6. A violation of any term or condition of this Permit shall subject the Permittee to enforcement procedures contained in North Carolina General Statutes 143-215.114, including assessment of civil penalties.

Permit issued this the 31st day of July, 1981.

NORTH CAROLINA ENVIRONMENTAL MANAGEMENT COMMISSION

Charles Wakild, Regional Supervisor
Division of Environmental Management
By Authority of the Environmental Management Commission

UNITED STATES MARINE CORPS
MARINE CORPS BASE
CAMP LEJEUNE, NORTH CAROLINA 28542

IN REPLY REFER TO
MAIN/TH/rn
13700
17 JUN 1981

Wayne

Mr. Charles Wakild
Regional Supervisor
Department of Natural Resources
and Community Development
Division of Environmental Management
7225 Wrightsville Avenue
Wilmington, NC 28403

Dear Mr. Wakild:

In accordance with North Carolina Administrative Code, Title 15, Chapter 2, Subchapter 2H, Section .0603, application is hereby made for renewal of Permit No. 3822, covering the operation of a No. 6 oil-fired boiler (12×10^6 BTU per hour heat input) and appurtenances, and for the discharge of the associated stack gases in the Hadnot Point area of Camp Lejeune.

No modifications or alterations have been made to the permitted boiler subsequent to the issuance of the original permit. Repair work that has been made in the boiler room includes replacement of a stop-check valve, expansion loop, and header stop valve in the steam discharge line between the boiler and the plant steam header, which in no way alters the operating parameters of the boiler.

If you have any further question on this matter, please contact Mr. Danny Sharpe, Base Maintenance Department, telephone (919) 451-5003.

Sincerely,

D B Barker

D. B. BARKER
Major General, U. S. Marine Corps
Commanding General

Bill, acknowledge receipt. Combine with permit for 4 coal boilers and specify location; i.e., Central Heating Plant, ~~Fire~~ ___ St., Hadnot Point, Camp Lej., Onslow Co.

C

RECEIVED
JUN 1981
WILMINGTON REGIONAL OFFICE
DEM

Ack
send to region.
for action

UNITED STATES MARINE CORPS
MARINE CORPS BASE
CAMP LEJEUNE, NORTH CAROLINA 28542

IN REPLY REFER TO
MAIN/FEC/rn
11370
18 JUN 1982

RECEIVED
JUN 22 1982
AIR QUALITY
PERMITS & OPERATIONS

Director
Division of Environmental Management
Department of Natural and Economic Resources
P. O. Box 27687
Raleigh, NC 27611

Dear Sir:

In accordance with North Carolina Administrative Code, Title 15, Chapter 2, Subchapter 2H, Section .0603, application is hereby made for renewal of Permit Number 3769R3, covering operation of a Number 6 oil-fired boiler (121 x 10^6 BTU per hour heat input) and air cleaning devices and appurtenances consisting of two single stage, dry type electrostatic precipitators (plate area of 36,540 square feet each) in series with two multicyclones installed on the exhausts from four coal/Number 6 oil-fired boilers (maximum heat input of 114,500,000 BTU per hour each) to remove visible and particulate emissions, and for the discharge of the treated air and associated stack gases into the outdoor atmosphere at its facility located at Central Heating Plant, Hadnot Point, Camp Lejeune, North Carolina, Onslow County.

No modifications or alterations have been made to the permitted plant subsequent to the issuance of the original permit. Repair work that has been made to plant equipment includes replacement of the nonreturn valve (Boiler Number 5), replacement of electrical switchgear, straightening of precipitator electrodes, and replacement of various steam meters.

If you have any further questions on this matter, please contact Mr. Julian Wooten, Base Maintenance Division, telephone (919) 451-5003.

Sincerely,

K. P. Millice Jr

K. P. MILLICE, JR.
Colonel
Assistant Chief of Staff, Facilities
By direction of the Commanding General

Copy to:
Dept of Nat Res & Comm Dev

NORTH CAROLINA

ENVIRONMENTAL MANAGEMENT COMMISSION

DEPARTMENT OF NATURAL RESOURCES & COMMUNITY DEVELOPMENT

Raleigh

P E R M I T

For the Discharge of Air Contaminants Into the Atmosphere

In accordance with the provisions of Article 21B of Chapter 143, General Statutes of North Carolina as amended, and other applicable Laws, Rules and Regulations,

PERMISSION IS HEREBY GRANTED TO

Marine Corps Base
Camp Lejeune, North Carolina

FOR THE

operation of a No. 6 oil fired boiler (121 x 10^6 BTU per hour heat input) and air cleaning devices and appurtenances consisting of two single stage, dry type electrostatic precipitators (plate area of 36,540 square feet each) in series with two multicyclones installed on the exhausts from four coal/No. 6 oil-fired boilers (maximum heat input of 114,500,000 BTU per hour each) to remove visible and particulate emissions, and for the discharge of the treated air and associated stack gases into the outdoor atmosphere at its facility located at Central Heating Plant, Hadnot Point, Camp Lejeune, North Carolina, Onslow County,

in accordance with the application received June 23, 1982, and in conformity with the plans, specifications, and other supporting data, all of which are filed with the Department of Natural Resources & Community Development and are incorporated as part of this Permit.

This permit shall be effective from the date of its issuance until July 1, 1985, is nontransferable to future owners and operators, and shall be subject to the following specified conditions and limitations:

1. The facility shall be properly operated and maintained at all times in such a manner as to effect an overall reduction in air pollution in keeping with the application and otherwise to reduce air contamination to the extent necessary to comply with applicable Environmental Management Regulations, including 15 NCAC 2D .0503, .0516, and .0521.

2. Reports on the operation and maintenance of the facility shall be submitted by the Permittee to the Division of Environmental Management at such intervals and in such form and detail as may be required by the Division. Information required in such reports may include, but is not limited to, process weight rates, firing rates, hours of operation, and preventive maintenance schedules.

3. When particulate and/or visible emissions, due to a malfunction of the process or control equipment, are or may be in excess of Environmental Management Regulations, the Regional Supervisor, Wilmington Region (919) 256-4161, of the Division of Environmental Management shall be notified as promptly as possible but in no case later than 12 hours following the start of such malfunction. Such notice shall specify the nature and cause of the malfunction, the time when such malfunction was first observed, the expected duration, and an estimate of the rate of emission. The term malfunction shall not be construed to include start-up or shut-down periods when these emissions exceed Environmental Management Regulations when the duration of such period is less than one hour. Furthermore, any period of duration one hour or greater when these emissions exceed Environmental Management Regulations shall be construed as a malfunction. This malfunction reporting requirement does not allow the operation of the facility in excess of Environmental Management Regulations.

4. The Permittee at least ninety (90) days prior to the expiration of this Permit shall request its extension by letter. The letter should include the permit number and a description of modifications, if any, that have been made.

5. This Permit is subject to revocation or modification upon a determination that information contained in the application or presented in support thereof is incorrect, conditions under which this Permit was granted have changed, or violations of conditions contained in this Permit have occurred.

6. A violation of any term or condition of this Permit shall subject the Permittee to enforcement procedures contained in North Carolina General Statutes 143-215.114, including assessment of civil penalties.

Permit issued this the 30th day of July, 1982.

NORTH CAROLINA ENVIRONMENTAL MANAGEMENT COMMISSION

Charles Wakild, Regional Supervisor
Division of Environmental Management
By Authority of the Environmental Management Commission

Permit No. 3769R4

North Carolina Department of Natural Resources & Community Development
James B. Hunt, Jr., Governor Joseph W. Grimsley, Secretary

DIVISION OF ENVIRONMENTAL MANAGEMENT

July 30, 1982

Mr. K. P. Millice, Jr.
Colonel, U.S. Marine Corps
Assistant Chief of Staff, Facilities
Marine Corps Base
Camp Lejeune, North Carolina 28542

Subject: Permit No. 3769R4
Marine Corps Base
Camp Lejeune, North Carolina

Dear Colonel Millice:

In accordance with your application received June 23, 1982, we are forwarding herewith Permit No. 3769R4 to Marine Corps Base, Camp Lejeune, North Carolina for the construction and/or operation of air pollution abatement facilities and/or emission sources.

If any parts, requirements, or limitations contained in this permit are unacceptable to you, you have the right to an adjudicatory hearing before a hearing officer upon written demand to the Director within thirty (30) days following receipt of this permit, identifying the specific issues to be contended. Unless such demand is made, this permit shall be final and binding.

This permit shall be effective from the date of issuance until July 1, 1985, is nontransferable to future owners and operators, and shall be subject to the conditions and limitations as specified therein.

Sincerely,

Charles Wakild
Regional Supervisor

CW:WC:cb
Enclosures
cc: Mike Sewell
Robert Jamieson
Wilmington Regional Office
Central Files

North Carolina Department of Natural Resources & Community Development
James B. Hunt, Jr., Governor
Howard N. Lee, Secretary
DIVISION OF ENVIRONMENTAL MANAGEMENT

February 3, 1981

Permit
1700

Mr. D. B. Barker
Major General, U.S. Marine Corps
Commanding
Marine Corps Base
Camp Lejeune, North Carolina 28542

Dear Mr. Barker:

Subject: Permit No. 3769R2
Marine Corps Base
Camp Lejeune, North Carolina

In accordance with your application received December 12, 1980, we are forwarding herewith Permit No. 3769R2 to Marine Corps Base, Camp Lejeune, North Carolina for the construction and/or operation of air pollution abatement facilities and/or emission sources.

If any parts, requirements, or limitations contained in this permit are unacceptable to you, you have the right to an adjudicatory hearing before a hearing officer upon written demand to the Director within thirty (30) days following receipt of this permit, identifying the specific issues to be contended. Unless such demand is made, this permit shall be final and binding.

This permit shall be effective from the date of issuance until October 1, 1982, is nontransferable to future owners and operators, and shall be subject to the conditions and limitations as specified therein.

Sincerely yours,

A C Turnage
for Robert F. Helms
Acting Director

Enclosures

cc: A. C. Turnage, Jr.
Chuck Wakild
Regional Office Manager

NORTH CAROLINA

ENVIRONMENTAL MANAGEMENT COMMISSION

DEPARTMENT OF NATURAL RESOURCES & COMMUNITY DEVELOPMENT

Raleigh

P E R M I T

For the Discharge of Air Contaminants Into the Atmosphere

In accordance with the provisions of Article 21B of Chapter 143, General Statutes of North Carolina as amended, and other applicable Laws, Rules and Regulations,

PERMISSION IS HEREBY GRANTED TO

Marine Corps Base
Camp Lejeune, North Carolina

FOR THE

construction and operation of air cleaning devices and appurtenances consisting of two single stage, dry type electrostatic precipitators (plate area of 36,540 square feet each) in series with two multicyclones installed on the exhausts from four coal/No. 6 oil-fired boilers (maximum heat input of 114,500,000 BTU per hour each) to remove visible and particulate emissions, and for the discharge of the treated air and associated stack gases into the outdoor atmosphere at its facility located at Camp Lejeune, North Carolina, Onslow County,

in accordance with the application received December 12, 1980, and in conformity with the plans, specifications, and other supporting data, all of which are filed with the Department of Natural Resources & Community Development and are incorporated as part of this Permit.

This Permit shall be effective from the date of its issuance until October 1, 1982, is nontransferable to future owners and operators, and shall be subject to the following specified conditions and limitations:

1. The air cleaning devices shall be properly operated and maintained at all times in such a manner as to effect an overall reduction in air pollution in keeping with the application and otherwise to reduce air contamination to the extent necessary to comply with applicable Environmental Management Commission Regulations, including 15 NCAC 2D .0503, .0516, and .0521.

2. Reports on the operation and maintenance of the facilities shall be submitted to the Division of Environmental Management at such intervals and in such form and detail as may be required by the Division. Information required in such reports may include, but is not limited to, process weight rates, firing rates, hours of operation, and preventive maintenance schedules.

3. When particulate and/or visible emissions, due to a malfunction, of the process or control equipment, are or may be in excess of the amount which would be emitted during normal operation, the Division of Environmental Management shall be notified as promptly as possible but in no case later than twelve (12) hours following the start of such malfunction. Such notice shall specify the nature and cause of the malfunction, the time when such malfunction was first observed, the expected duration, and an estimate of the rate of emission. The term malfunction shall not be construed to include start-up or shut-down periods.

4. A violation of any term or condition of this Permit shall subject the Permittee to enforcement procedures contained in North Carolina General Statutes 143-215.114, including assessment of civil penalties.

5. Coal shall not be burned in the boilers unless the air cleaning devices are in operation.

Permit issued this the 3rd day of February, 1981.

NORTH CAROLINA ENVIRONMENTAL MANAGEMENT COMMISSION

G C Turnage

for Robert F. Helms, Acting Director
Division of Environmental Management
By Authority of the Environmental Management
Commission

Permit No. 3769R2

29-650

North Carolina Department of Natural Resources & Community Development

James B. Hunt, Jr., Governor

Howard N. Lee, Secretary

DIVISION OF ENVIRONMENTAL MANAGEMENT

May 20, 1981

Mr. D.B. Barker
Major General, U.S. Marine Corps
Commanding
Marine Corps Base
Camp Lejeune, North Carolina 28542

Subject: Permit No. 4640
Marine Corps Base
Camp Lejeune, North Carolina

Dear General Barker:

In accordance with your application received May 1, 1981, we are forwarding herewith Permit No. 4640 to Marine Corps Base, Camp Lejeune, North Carolina for the construction and/or operation of air pollution abatement facilities and/or emission sources.

If any parts, requirements, or limitations contained in this permit are unacceptable to you, you have the right to an adjudicatory hearing before a hearing officer upon written demand to the Director within thirty (30) days following receipt of this permit, identifying the specific issues to be contended. Unless such demand is made, this permit shall be final and binding.

This permit shall be effective from the date of issuance until April 1, 1986, is nontransferable to future owners and operators, and shall be subject to the conditions and limitations as specified therein.

Sincerely,

Chas. Wakild

Charles Wakild
Regional Supervisor

Enclosure

cc: Stan Taylor
Robert Jamieson
Wilmington Regional Office
Central Files

NORTH CAROLINA

ENVIRONMENTAL MANAGEMENT COMMISSION

DEPARTMENT OF NATURAL RESOURCES & COMMUNITY DEVELOPMENT

Raleigh

P E R M I T

For the Discharge of Air Contaminants Into the Atmosphere

In accordance with the provisions of Article 21B of Chapter 143, General Statutes of North Carolina as amended, and other applicable Laws, Rules and Regulations,

PERMISSION IS HEREBY GRANTED TO

Marine Corps Base
Camp Lejeune, North Carolina

FOR THE

operation of three No. 6 oil-fired boilers, two (47.7 million BTU per hour heat input each) and one (23.7 million BTU per hour heat input) and for the discharge of the associated stack gases into the outdoor atmosphere at its facility located at 7th Street, Camp Geiger, North Carolina, Onslow County,

in accordance with the application received May 1, 1981 and in conformity with the plans, specifications, and other supporting data, all of which are filed with the Department of Natural Resources & Community Development and are incorporated as part of this Permit.

This Permit shall be effective from the date of its issuance until April 1, 1986, is nontransferable to future owners and operators, and shall be subject to the following specified conditions and limitations:

1. The air cleaning devices shall be properly operated and maintained at all times in such a manner as to effect an overall reduction in air pollution in keeping with the application and otherwise to reduce air contamination to the extent necessary to comply with applicable Environmental Management Commission Regulations, including 15 NCAC 2D .0503, .0516, and .0521, and in no case shall the sulfur dioxide emissions from the boilers exceed 2.3 pounds per million BTU input.

2. Reports on the operation and maintenance of the facilities shall be submitted to the Division of Environmental Management at such intervals and in such form and detail as may be required by the Division. Information required in such reports may include, but is not limited to, process weight rates, firing rates, hours of operation, and preventive maintenance schedules.

3. Camp Lejeune Marine Base, at least ninety (90) days prior to the expiration of this Permit, shall request its extension by letter. The letter should include the permit number and a description of modifications, if any, that have been made.

4. This Permit is subject to revocation or modification upon a determination that information contained in the application or presented in support thereof is incorrect, conditions under which the permit renewal was granted have changed, or violations of conditions contained in the permit have occurred.

5. A violation of any term or condition of this Permit shall subject the Permittee to enforcement procedures contained in North Carolina General Statutes 143-215.114, including assessment of civil penalties.

Permit issued this the 20th day of May

NORTH CAROLINA ENVIRONMENTAL MANAGEMENT COMMISSION

Charles Wakild

Charles Wakild, Regional Supervisor
Division of Environmental Management
By Authority of the Environmental Management Commission

Permit No. 4640

BOILER #83

NORTH CAROLINA

ENVIRONMENTAL MANAGEMENT COMMISSION

RALEIGH

APPLICATION FOR

A "PERMIT"

TO CONSTRUCT AND OPERATE AIR

POLLUTION ABATEMENT FACILITIES AND/OR EMISSION SOURCES

Filed By: Major General D. B. Barker
(Name)

Marine Corps Base
(Address)

Camp Lejeune, North Carolina

AQ-22

ENCLOSURE (4)

APPLICATION INSTRUCTIONS

THIS APPLICATION IS SUBJECT TO REJECTION UNLESS ALL REQUIRED INFORMATION IS SUBMITTED

1. ATTACH DETAILED ENGINEERING DRAWINGS OF SOURCE(S), PROCESS(ES) AND COLLECTION DEVICE(S) AS REQUESTED IN EACH SECTION. IF MULTIPLE SOURCES OR DEVICES, USE ADDENDUM SHEETS AS NECESSARY.

2. Submit application, detailed engineering drawings, specifications and other supporting data and documents in TRIPLICATE.

3. Attach additional sheets as necessary to complete any portion of the application.

4. The application MUST BE SIGNED by the RESPONSIBLE INDIVIDUAL of the company that is to PURCHASE AND OPERATE the facilities for which a Permit is applied.

5. ALL APPLICANTS MUST COMPLETE THE FIRST PAGE AND SECTIONS I AND VI.

6. If an Incinerator, Fuel Burning Source, Wet Collection Device or Dry Collection Device is to be installed and operated, COMPLETE SECTIONS II, III, IV or V respectively.

7. All applications should be mailed to: ENVIRONMENTAL MANAGEMENT COMMISSION
AIR QUALITY SECTION
P. O. Box 27687
Raleigh, North Carolina 27611

APPLICATION FOR A "PERMIT"
To Construct and Operate Air Pollution Abatement Facilities and/or Emission Sources
Three Copies to be Submitted
Fourth Copy Should be Retained by Applicant

Date: 24 September 1980

In accordance with the provisions of Article 21 of Chapter 143, General Statutes of North Carolina as amended, application is hereby made by Marine Corps Base, Camp Lejeune, North Carolina
(Name of Company, Establishment, Town, Etc.) (Include Division or Plant Name in Addition to Parent Company if Applicable) in the County of Onslow at Jacksonville, North Carolina
(Street and City or Town Address of Plant or Facility)
for issuance of a "Permit" to construct and operate air pollution abatement facilities and/or emissions sources at above location as specified in the accompanying drawings, specifications, and other pertinent data:

1. Nature of Operation Conducted at the Above Facility: Military Operations

2. Description of Process(es) Whose Emission(s) is/are to be Controlled by the Facility or Source(s) Which is/are to be Constructed or Altered. (Complete Section I)

Boiler, No. 6 Fuel Oil — Boiler No. 83, Bldg No. G-650

3. Furnish Type and Narrative Description of Proposed Control Device(s). (Complete Appropriate Supplemental Data Sheets for Control Device to be Installed and/or Operated. Include Make and Model Number of Control Device(s) and Number of Identical Units).

No. 6 Oil fired, no control device.

4.

Contaminant Emitted:	Weight Rate of Emissions (lb/hr): Without Control Device	With Control Device	Control Efficiency (%): Without Control Device	With Control Device
SOx and Particulates	113.93 lb/hr	N/A	N/A	N/A

5. Name and Address of Engineering Firm that Prepared Plans:

6. Ultimate Disposition of Collected Pollutants:

7. Date on Which Facilities are to be Completed and in Operation: October, 19 80

8. Indicate Period of Time for Which Facilities are Estimated to be Adequate: 20 Years

9. Estimate Cost of Air Pollution Control Device $ 0

10. Hours Facility is Operated Per Year: 8760

Name: Major General D. B. Barker, USMC
(Responsible Individual of Company Purchasing/Operating Facility...PLEASE PRINT)

Mailing Address: Marine Corps Base
Camp Lejeune
North Carolina 28542

Signature and Title: DB Barker
D. B. BARKER, MAJOR GENERAL, USMC
Commanding General

Telephone Number: 451-5024

AQ-22

I. GENERAL DATA FOR PROCESSES

Attach detailed process engineering drawings, equipment drawings and flow diagrams for the process(es) or source(s) being constructed or altered.

Name of Process: Heating and Steam Plant

Total Weight of Materials Entering this Process: 325 gal/hr ~~xxxxxxxxxx~~

Volume and Temperature of Air Flow Entering Control Device: _____ CFM @ _____ °F

Volume and Temperature of Effluent at Discharge Point to Atmosphere: _____ CFM @ _____ °F

Pollutant(s) to be Controlled: _____

Height of Process Stack or Vent Above Ground Level 41.5 ft. Inside area of Stack 9.62 ft^2.

Particulate Emission Rate (Before Control) 8.0 lb/hr

Particle Size Distribution: 0-5μ____%, 5-10μ____%, 10-20μ____%, 20-30μ____%, 30-40μ____%, 40-50μ____%, >50μ____%

Gaseous Emission(s): Name (Chemical Formula)	$\mu g/m^3$, PPM	or lb/hr
SO_x		105.93

II. SUPPLEMENTARY DATA FOR INCINERATORS (Including Conical Incinerators)

Circle Type of Waste or Indicate Composition: Type 0 Type I Type II Type III Type IV

Combustible: ____% Non-Combustible: ____% Moisture: ____% Heat Value: ____BTU/lb

Total Waste Generated Per Day: _____ lb. Hours Incinerator will be Operated: _____ hrs/day

Design Capacity for Above Waste: _____ lbs/hr Manufacturer and Model Number; Approximate Cost: _____

Primary Chamber Volume: _____ $ft.^3$ Secondary Chamber Volume: _____ $ft.^3$

Air Requirements: Total Excess Air ____% Draft: Natural ____ Induced ____ Other ____

Overfire Air: ____cfm Underfire Air: ____cfm

Is there an Electronically Controlled, Exhaust Gas Temperature Modulated, Damper Installed on the Conical Incinerator for: Overfire Air Supply____, Underfire Air Supply____, Dome____ Temperature Set Point____°F

Flame Port Temperature: _____ °F Secondary Chamber Temperature: _____ °F

Is there a Continuous Exhaust Gas Temperature Recorder? Yes____ No____

Stack:
Inside Area ____$ft.^2$ Height ____ft. Gas Velocity ____ft/sec Temperature ____°F Fan Capacity ____cfm Stack Lined? _____

Is there a Wet Scrubber?

Yes ____ No ____ Flow Rate of H_2O into Scrubber ____gal/min Temperature Before Scrubber ____°F

Aux. Fuel: Oil _____ Gas _____ Other _____ Burner Rating: Primary Chamber _____BTU/hr Secondary Chamber _____BTU/hr Stack _____BTU/hr

Primary Burner: Is there a Preheat Timer? Yes ____ No ____ Preheating Time: _____min.

Secondary Burner or Afterburner: Is there a Timer? Yes ____ No ____ Length of Time Burner is Operated _____min.

Is the Timer Reset by Charging Door? Yes ____ No ____ Other Mode of Burner Control _____

Type of Feed: Manual _____ Automatic _____ If Automatic, Describe _____

Distance from Incinerator to Nearest Structure(s) in which People Live and/or Work.____ft.

Signature: _____ Title: _____

*Attach detailed dimensioned drawing or sketch showing internal features of dryers, wood or coal fired boilers, and recovery boilers.

Type of Fuel Burning Source Boiler Stack Height Above Ground Level 41'5" ft. Inside Area of Stack 9.62 ft^2

Make and Model Number Combustion Engineering Inc. NB110232 Volume of Furnace ____ ft^3

Specify Actual Amount of Each Fuel Used in Above Source (s):

Coal ____ lb/hr; Oil Grade 6 Amount 325 gal/hr, at 146,900 BTU/gal and ____ lb/gal or ____ lb/hr

Wood ____ lb/hr; Natural Gas ____ SCF/hr, at ____ BTU/SCF; Other _____

(Specify type, amount and heating value)

Specify Maximum Rating for Each Fuel Burning Source:

Coal ____ Oil 325 g/hr Wood ____ Natural Gas ____ Other _____

Maximum Sulfur Content of Fuel 2.05% Specify Standby Fuel none Maximum % Sulfur ____

Type of Solid Fuel Burning Equipment Used: Hand Fired ___ Spreader Stoker ___ Underfeed Stoker ___ Chain Grate ___

Traveling Grate ___ Pulverizer ___ Cyclone Furnace ___ Other (Specify) _____

Ash Content of Fuel: Specify Method and Schedule of Tube Cleaning, if Applicable:

Coal ____ % Wood ____ % Other ____ % Lancing _____ Tube Blowing _____ Schedule _____

Emission Control Equipment (Describe in Detail in Sections IV and V)

Collection Device: Wet ___ Dry ___ Steam Injection ___ Air Injection ___ Is Collected Flyash Reinjected? ____

Draft on Boiler (Natural ____ Induced X) ____ cfm at ____ °F

Total Number of Fuel Burning Sources Within Property Boundaries: 3

Maximum Capacity Rating, by Type, for All Fuel Burning Units Excluding that Itemized Above: (Total Like Units) 2

Coal ___ lb/hr Wood ___ lb/hr Oil 486 gal/hr Natural Gas ___ SCF/hr

IV. SUPPLEMENTARY DATA FOR WET COLLECTION DEVICES

*Attach detailed engineering drawings of the control device and particle size versus removal efficiency curves.

Liquid Scrubbing Medium and Additives: _____

Total Liquid Injection Rate (Include Recirculated and Make-up Rates) ____ gal/min or gal/1000 ft^3

Operating Pressure Drop Across Device ___ in H_2O

ANSWER FOLLOWING QUESTIONS FOR SPECIFIC DEVICE:

VENTURI SCRUBBER: Inlet Area ___ in^2 Throat Area ___ in^2 Throat Velocity ___ ft/sec

GRAVITY SPRAY CHAMBER: Number of Nozzles ___ Liquid Droplet Size ___ u Co-Current ___ Countercurrent ___

WET CYCLONE:

Body Diameter ___ in Length _____ in

Inlet Area _____ in^2 Number of Nozzles _____

Outlet Area _____ in^2

PACKED TOWER OR PLATE TOWER:

Cross-Sectional Area _____ ft^2 Type of Plate _____

Length _____ ft Depth of Packing _____ ft

Number of Plates _____ Type of Packing _____

OTHER WET COLLECTION DEVICES: GIVE COMPLETE DESCRIPTION INCLUDING DESIGN PARAMETERS AND DETAILED ENGINEERING DRAWINGS.

Signature: _____ Title: _____

V. SUPPLEMENTARY DATA FOR DRY COLLECTION DEVICES

Attach detailed engineering drawings of the control device and particle size versus removal efficiency curves.

BAGHOUSES: Cloth Area _____ ft^2

Bag Material _____

Number of Compartments _____

Pressure - Drop Total _____ in H_2O

Method of Cleaning _____

Air-to-Cloth Ratio _____ ft/min

Time Between Cleaning _____ mins, hrs

ELECTROSTATIC PRECIPITATORS:

GENERAL:

Effective Area of Grounded Collector Plates _____ ft^2

Number of Compartments or Chambers _____ Number of Cells per Compartment _____

Electrical Field Gradient at the Discharge or Emitting Electrodes _____ KV/in

Average Electrical Field Gradient at the the Grounded Collecting Electrodes _____ KV/in

Fields of Treatment _____ Potential Applied to Emitting Wires _____ KV

SINGLE STAGE TYPE:

Distance Between Emitting Wires and Collecting Plates _____ in.

Number of Isolatable Bus Sections _____ Corona Power _____ Watts/1000 cfm

TWO STAGE TYPE:

Distance Between First Stage Emitting Electrodes and Field Receiver Electrodes (Ground) _____ in

Potential Applied to Second Stage Emitting Plates _____ KV

Distance Between Second Stage Emitting Plates and Grounded Collection Plates _____ in

CYCLONES/MULTICYCLONES:

Simple Cyclone

Diameter _____ in

Inlet Dimensions _____

Outlet Dimensions _____

Pressure Drop _____ in H_2O

Number of Cyclones _____

Multicyclone

Diameter _____ in

Inlet Dimensions of Individual Cyclone _____

Outlet Dimensions of Individual Cyclone _____

Pressure Drop _____ in H_2O

Number of Cyclones _____

OTHER DRY COLLECTION DEVICES: GIVE COMPLETE DETAILED ENGINEERING DESCRIPTION AND DRAWINGS.

Signature: _____ Title: _____

Boiler 83

VI. AREA DIAGRAM

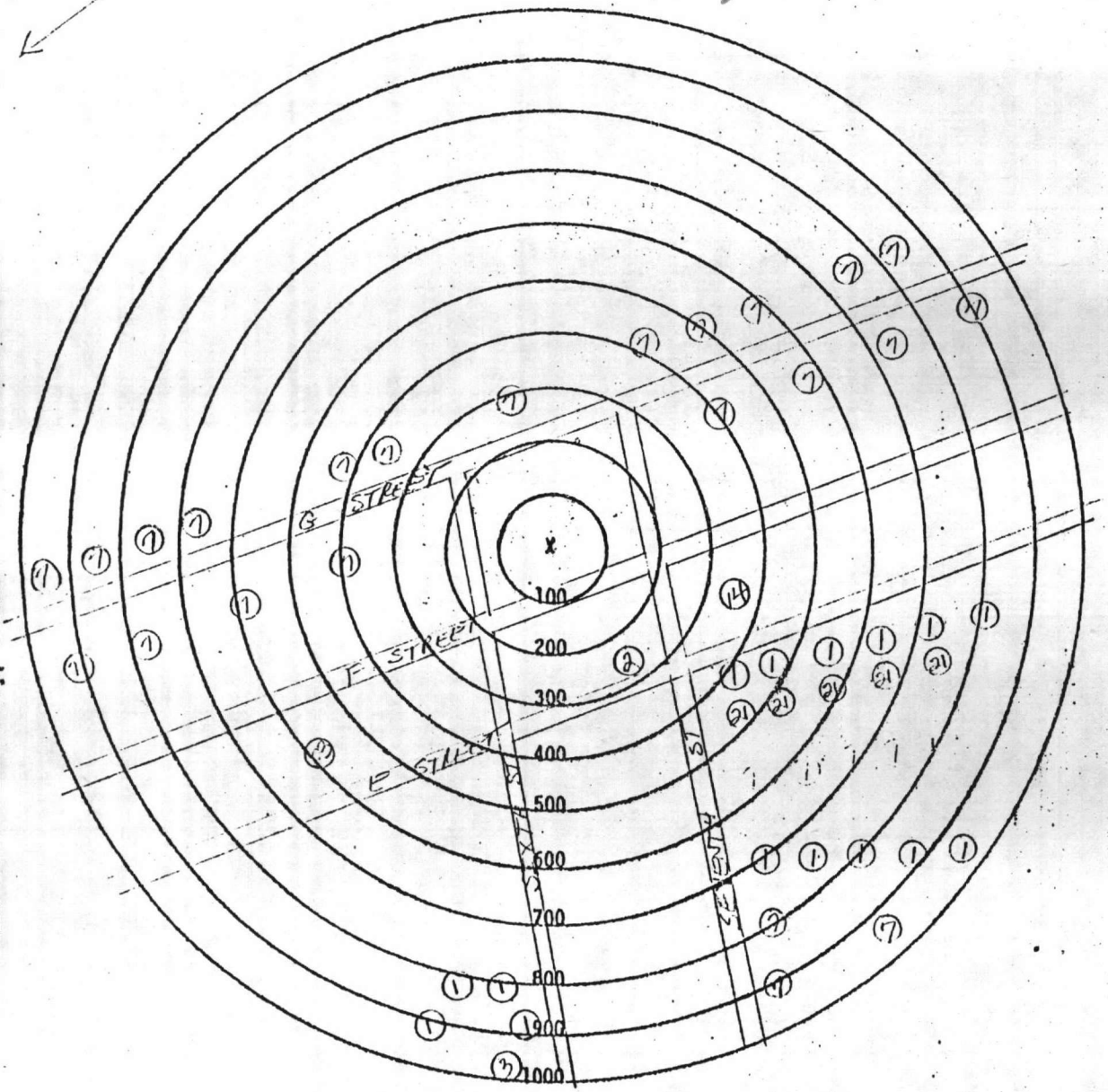

Owner Marine Corps Base, Camp Lejeune, N.C.

Location Seventh Street, Camp Geiger
(Give Street Address)

INSTRUCTIONS:

1. Show all surrounding buildings and roads within 1000 feet of subject equipment which is located at center of circles.
2. Indicate location and type of building by the use of small numbered circles with the description below.
3. Show roads as lines representing the road edges. Indicate street names and highway numbers.
4. Show wooded or cleared areas by approximate boundary lines and the words "woods", "cleared", "cornfield", etc.
5. Indicate diraction of north by arrow.

CODE	DESCRIPTION
1	Barracks
2	Mess Hall
3	Administration
4	
5	
6	
7	Warehouse
8	
9	
10	
14	Dispensary
EXAMPLE	1 Church
	2 Residence
21	Washroom
22	NCO Club

X Indicates location of equipment.

BOILER #84

NORTH CAROLINA

ENVIRONMENTAL MANAGEMENT COMMISSION

RALEIGH

RECEIVED
NOV 1989
WILMINGTON REGIONAL OFFICE
DEM

APPLICATION FOR

A "PERMIT"

TO CONSTRUCT AND OPERATE AIR

POLLUTION ABATEMENT FACILITIES AND/OR EMISSION SOURCES

Filed By: Major General D. B. Barker
(Name)

Marine Corps Base
(Address)

Camp Lejeune, North Carolina

AQ-22

APPLICATION INSTRUCTIONS

THIS APPLICATION IS SUBJECT TO REJECTION UNLESS ALL REQUIRED INFORMATION IS SUBMITTED

1. ATTACH DETAILED ENGINEERING DRAWINGS OF SOURCE(S), PROCESS(ES) AND COLLECTION DEVICE(S) AS REQUESTED IN EACH SECTION. IF MULTIPLE SOURCES OR DEVICES, USE ADDENDUM SHEETS AS NECESSARY.

2. Submit application, detailed engineering drawings, specifications and other supporting data and documents in TRIPLICATE.

3. Attach additional sheets as necessary to complete any portion of the application.

4. The application MUST BE SIGNED by the RESPONSIBLE INDIVIDUAL of the company that is to PURCHASE AND OPERATE the facilities for which a Permit is applied.

5. ALL APPLICANTS MUST COMPLETE THE FIRST PAGE AND SECTIONS I AND VI.

6. If an Incinerator, Fuel Burning Source, Wet Collection Device or Dry Collection Device is to be installed and operated, COMPLETE SECTIONS II, III, IV or V respectively.

7. All applications should be mailed to: ENVIRONMENTAL MANAGEMENT COMMISSION
AIR QUALITY SECTION
P. O. Box 27687
Raleigh, North Carolina 27611

APPLICATION FOR A "PERMIT"
To Construct and Operate Air Pollution Abatement Facilities and/or Emission Sources
Three Copies to be Submitted
Fourth Copy Should be Retained by Applicant

Date: 24 September 1980

In accordance with the provisions of Article 21 of Chapter 143, General Statutes of North Carolina as amended, application

is hereby made by Marine Corps Base, Camp Lejeune, North Carolina
(Name of Company, Establishment, Town, Etc.) (Include Division or Plant Name in Addition to Parent

Company if Applicable) in the County of Onslow at Jacksonville, North Carolina
(Street and City or Town Address of Plant or Facility)
for issuance of a "Permit" to construct and operate air pollution abatement facilities and/or emissions sources at above location as specified in the accompanying drawings, specifications, and other pertinent data:

1. Nature of Operation Conducted at the Above Facility:

2. Description of Process(es) Whose Emission(s) is/are to be Controlled by the Facility or Source(s) Which is/are to be Constructed or Altered. (Complete Section I)
Boiler, No. 6 Fuel Oil Boiler No. 84
Bldg No. G-650

3. Furnish Type and Narrative Description of Proposed Control Device(s).(Complete Appropriate Supplemental Data Sheets for Control Device to be Installed and/or Operated. Include Make and Model Number of Control Device(s) and Number of Identical Units).
No. 6 Oil Fired, No control device.

4. Contaminant Emitted:	Weight Rate of Emissions (lb/hr): Without Control Device	With Control Device	Control Efficiency (%): Without Control Device	With Control Device
SO_x and Particulant	113.93 lb/hr	N/A	N/A	N/A

5. Name and Address of Engineering Firm that Prepared Plans:

6. Ultimate Disposition of Collected Pollutants:

7. Date on Which Facilities are to be Completed and in Operation: October, 1980

8. Indicate Period of Time for Which Facilities are Estimated to be Adequate: 20 Years

9. Estimate Cost of Air Pollution Control Device $ 0

10. Hours Facility is Operated Per Year: 8,760

Name: Major General D. B. Barker, USMC
(Responsible Individual of Company Purchasing/ Operating Facility...PLEASE PRINT)

Mailing Address: Marine Corps Base
Camp Lejeune
North Carolina 28542

Signature and Title: DB Barker
D. B. BARKER, MAJOR GENERAL, USMC
Commanding General

Telephone Number: 451-5024

AQ-22

I. GENERAL DATA FOR PROCESSES

Attach detailed process engineering drawings, equipment drawings and flow diagrams for the process(es) or source(s) being constructed or altered.

Name of Process: Heating and Steam Plant

Total Weight of Materials Entering this Process: 325 galxxb/hr xx xxxxx

Volume and Temperature of Air Flow Entering Control Device: _____ CFM @ _____ °F

Volume and Temperature of Effluent at Discharge Point to Atmosphere: _____ CFM @ _____ °F

Pollutant(s) to be Controlled: _____

Height of Process Stack or Vent Above Ground Level 33'7" ft. Inside area of Stack 9.62 ft^2.

Particulate Emission Rate (Before Control) 8 lb/hr

Particle Size Distribution: 0-5μ____%, 5-10μ____%, 10-20μ____%, 20-30μ____%, 30-40μ____%, 40-50μ____%, >50μ____%

Gaseous Emission(s): Name (Chemical Formula)	$\mu g/m^3$, PPM	or lb/hr
SO_x		105.93

II. SUPPLEMENTARY DATA FOR INCINERATORS (Including Conical Incinerators)

Circle Type of Waste or Indicate Composition: Type 0 Type I Type II Type III Type IV

Combustible: ____% Non-Combustible: ____% Moisture: ____% Heat Value: ____BTU/lb

Total Waste Generated Per Day: _____ lb. Hours Incinerator will be Operated: _____ hrs/day

Design Capacity for Above Waste: _____ lbs/hr Manufacturer and Model Number; Approximate Cost: _____

Primary Chamber Volume: _____ $ft.^3$ Secondary Chamber Volume: _____ $ft.^3$

Air Requirements: Total Excess Air ____% Draft: Natural ____ Induced ____ Other ____
Overfire Air: ____cfm Underfire Air: ____cfm

Is there an Electronically Controlled, Exhaust Gas Temperature Modulated, Damper Installed on the Conical Incinerator for: Overfire Air Supply____, Underfire Air Supply____, Dome____Temperature Set Point____°F

Flame Port Temperature: _____ °F Secondary Chamber Temperature: _____ °F

Is there a Continuous Exhaust Gas Temperature Recorder? Yes____ No____

Stack:
Inside Area ____$ft.^2$ Height ____ft. Gas Velocity ____ft/sec Temperature ____°F Fan Capacity ____cfm Stack Lined? _____

Is there a Wet Scrubber?

Yes ____ No ____ Flow Rate of H_2O into Scrubber ____gal/min Temperature Before Scrubber ____°F

Aux. Fuel: Oil _____ Gas _____ Other _____ Burner Rating: Primary Chamber _____BTU/hr Secondary Chamber _____BTU/hr Stack _____BTU/hr

Primary Burner: Is there a Preheat Timer? Yes ____ No ____ Preheating Time: _____min.

Secondary Burner or Afterburner: Is there a Timer? Yes ____ No ____ Length of Time Burner is Operated _____min.

Is the Timer Reset by Charging Door? Yes ____ No ____ Other Mode of Burner Control _____

Type of Feed: Manual _____ Automatic _____ If Automatic, Describe _____

Distance from Incinerator to Nearest Structure(s) in which People Live and/or Work.____ft.

Signature: _____ Title: _____

*Attach detailed dimensioned drawing or sketch showing internal features of dryers, wood or coal fired boilers, and recovery boilers.

Type of Fuel Burning Source Boiler Stack Height Above Ground Level 33'7" ft. Inside Area of Stack 9.62 ft^2

Make and Model Number Combustion Engineering Inc. NB110232 Volume of Furnace ____ ft^3

Specify Actual Amount of Each Fuel Used in Above Source (s):

Coal ____ lb/hr; Oil Grade 6 Amount 325 gal/hr, at 146,900 BTU/gal and ____ lb/gal or ____ lb/hr

Wood ____ lb/hr; Natural Gas ____ SCF/hr, at ____ BTU/SCF; Other _____

(Specify type, amount and heating value)

Specify Maximum Rating for Each Fuel Burning Source:

Coal ____ Oil 325 Wood ____ Natural Gas ____ Other _____

Maximum Sulfur Content of Fuel 2.05% Specify Standby Fuel None Maximum % Sulfur ____

Type of Solid Fuel Burning Equipment Used: Hand Fired ___ Spreader Stoker ___ Underfeed Stoker ___ Chain Grate ___

Traveling Grate ___ Pulverizer ___ Cyclone Furnace ___ Other (Specify) _____

Ash Content of Fuel: Specify Method and Schedule of Tube Cleaning, if Applicable:

Coal ____ % Wood ____ % Other ____ % Lancing _____ Tube Blowing _____ Schedule _____

Emission Control Equipment (Describe in Detail in Sections IV and V)

Collection Device: Wet ____ Dry ____ Steam Injection ____ Air Injection ____ Is Collected Flyash Reinjected? ____

Draft on Boiler (Natural ____ Induced X) ____ cfm at ____ °F

Total Number of Fuel Burning Sources Within Property Boundaries: 3

Maximum Capacity Rating, by Type, for All Fuel Burning Units Excluding that Itemized Above: (Total Like Units) 2

Coal ____ lb/hr Wood ____ lb/hr Oil 486 gal/hr Natural Gas ____ SCF/hr

IV. SUPPLEMENTARY DATA FOR WET COLLECTION DEVICES

*Attach detailed engineering drawings of the control device and particle size versus removal efficiency curves.

Liquid Scrubbing Medium and Additives: _____

Total Liquid Injection Rate (Include Recirculated and Make-up Rates) ____ gal/min or gal/1000 ft^3

Operating Pressure Drop Across Device ____ in H_2O

ANSWER FOLLOWING QUESTIONS FOR SPECIFIC DEVICE:

VENTURI SCRUBBER: Inlet Area ____ in^2 Throat Area ____ in^2 Throat Velocity ____ ft/sec

GRAVITY SPRAY CHAMBER: Number of Nozzles ____ Liquid Droplet Size ____ u Co-Current ____ Countercurrent ____

WET CYCLONE:

Body Diameter ____ in Length _____ in

Inlet Area _____ in^2 Number of Nozzles _____

Outlet Area _____ in^2

PACKED TOWER OR PLATE TOWER:

Cross-Sectional Area _____ ft^2 Type of Plate _____

Length _____ ft Depth of Packing _____ ft

Number of Plates _____ Type of Packing _____

OTHER WET COLLECTION DEVICES: GIVE COMPLETE DESCRIPTION INCLUDING DESIGN PARAMETERS AND DETAILED ENGINEERING DRAWINGS.

Signature: _____ Title: _____

V. SUPPLEMENTARY DATA FOR DRY COLLECTI EVICES

*Attach detailed engineering drawings of the control device and particle size versus removal efficiency curves.

BAGHOUSES: Cloth Area _____ ft^2

Bag Material _____

Number of Compartments _____

Pressure - Drop Total _____ in H_2O

Method of Cleaning _____

Air-to-Cloth Ratio _____ ft/min

Time Between Cleaning _____ mins, hrs

ELECTROSTATIC PRECIPITATORS:

GENERAL:

Effective Area of Grounded Collector Plates _____ ft^2

Number of Compartments or Chambers _____ Number of Cells per Compartment _____

Electrical Field Gradiant at the Discharge or Emitting Electrodes _____ KV/in

Average Electrical Field Gradient at the the Grounded Collecting Electrodes _____ KV/in

Fields of Treatment _____ Potential Applied to Emitting Wires _____ KV

SINGLE STAGE TYPE:

Distance Between Emitting Wires and Collecting Plates _____ in.

Number of Isolatable Bus Sections _____ Corona Power _____ Watts/1000 cfm

TWO STAGE TYPE:

Distance Between First Stage Emitting Electrodes and Field Receiver Electrodes (Ground) _____ in

Potential Applied to Second Stage Emitting Plates _____ KV

Distance Between Second Stage Emitting Plates and Grounded Collection Plates _____ in

CYCLONES/MULTICYCLONES:

Simple Cyclone

Diameter _____ in

Inlet Dimensions _____

Outlet Dimensions _____

Pressure Drop _____ in H_2O

Number of Cyclones _____

Multicyclone

Diameter _____ in

Inlet Dimensions of Individual Cyclone _____

Outlet Dimensions of Individual Cyclone _____

Pressure Drop _____ in H_2O

Number of Cyclones _____

OTHER DRY COLLECTION DEVICES: GIVE COMPLETE DETAILED ENGINEERING DESCRIPTION AND DRAWINGS.

Signature: _____

Title: _____

Boiler 84

VI. AREA DIAGRAM

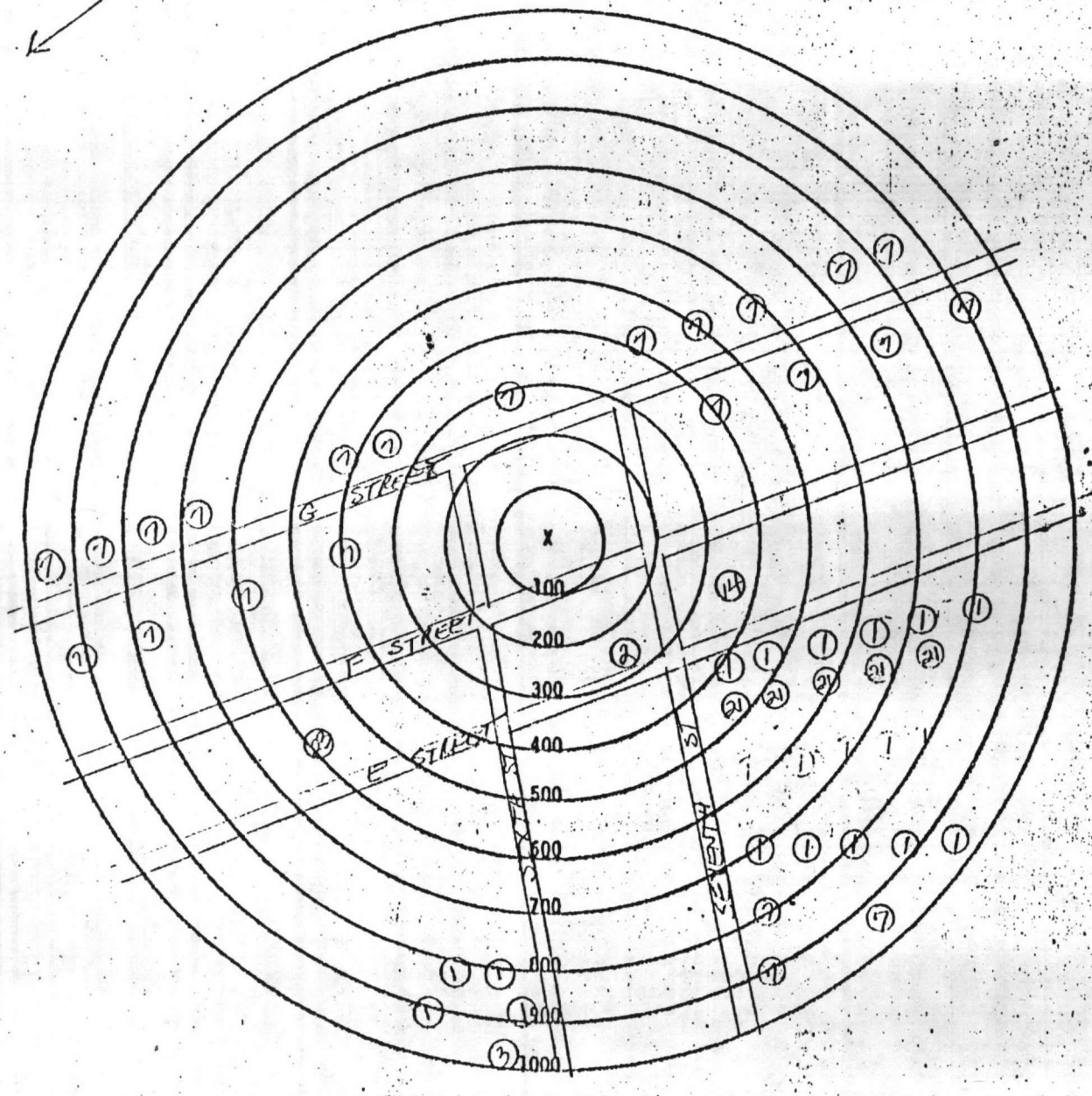

Owner Marine Corps Base, Camp Lejeune, N.C.

Location Seventh Street, Camp Geiger
(Give Street Address)

INSTRUCTIONS:

1. Show all surrounding buildings and roads within 1000 feet of subject equipment which is located at center of circles.
2. Indicate location and type of building by the use of small numbered circles with the description below.
3. Show roads as lines representing the road edges. Indicate street names and highway numbers.
4. Show wooded or cleared areas by approximate boundary lines and the words "woods", "cleared", "cornfield", etc.
5. Indicate direction of north by arrow.

CODE	DESCRIPTION
1	Barracks
2	Mess Hall
3	Administration
4	
5	
6	
7	Warehouse
8	
9	
10	
14	Dispensary
EXAMPLE	1 Church
	2 Residence
21	Washroom
22	NCO Club

X Indicates location of equipment.

BOILER #85

NORTH CAROLINA

ENVIRONMENTAL MANAGEMENT COMMISSION

RALEIGH

APPLICATION FOR

A "PERMIT"

TO CONSTRUCT AND OPERATE AIR

POLLUTION ABATEMENT FACILITIES AND/OR EMISSION SOURCES

Filed By: Major General D. B. Barker
(Name)

Marine Corps Base
(Address)

Camp Lejeune, North Carolina

AQ-22

APPLICATION INSTRUCTIONS

THIS APPLICATION IS SUBJECT TO REJECTION UNLESS ALL REQUIRED INFORMATION IS SUBMITTED

1. ATTACH DETAILED ENGINEERING DRAWINGS OF SOURCE(S), PROCESS(ES) AND COLLECTION DEVICE(S) AS REQUESTED IN EACH SECTION. IF MULTIPLE SOURCES OR DEVICES, USE ADDENDUM SHEETS AS NECESSARY.

2. Submit application, detailed engineering drawings, specifications and other supporting data and documents in TRIPLICATE.

3. Attach additional sheets as necessary to complete any portion of the application.

4. The application MUST BE SIGNED by the RESPONSIBLE INDIVIDUAL of the company that is to PURCHASE AND OPERATE the facilities for which a Permit is applied.

5. ALL APPLICANTS MUST COMPLETE THE FIRST PAGE AND SECTIONS I AND VI.

6. If an Incinerator, Fuel Burning Source, Wet Collection Device or Dry Collection Device is to be installed and operated, COMPLETE SECTIONS II, III, IV or V respectively.

7. All applications should be mailed to: ENVIRONMENTAL MANAGEMENT COMMISSION
AIR QUALITY SECTION
P. O. Box 27687
Raleigh, North Carolina 27611

APPLICATION FOR A "PERMIT"
To Construct and Operate Air Pollution Abatement Facilities and/or Emission Sources
Three Copies to be Submitted
Fourth Copy Should be Retained by Applicant

Date: 24 September 1980

In accordance with the provisions of Article 21 of Chapter 143, General Statutes of North Carolina as amended, application is hereby made by Marine Corps Base, Camp Lejeune, North Carolina
(Name of Company, Establishment, Town, Etc.) (Include Division or Plant Name in Addition to Parent Company if Applicable) in the County of Onslow at Jacksonville, North Carolina
(Street and City or Town Address of Plant or Facility)
for issuance of a "Permit" to construct and operate air pollution abatement facilities and/or emissions sources at above location as specified in the accompanying drawings, specifications, and other pertinent data:

1. Nature of Operation Conducted at the Above Facility: Military Operation

2. Description of Process(es) Whose Emission(s) is/are to be Controlled by the Facility or Source(s) Which is/are to be Constructed or Altered. (Complete Section I)
Boiler, No. 6 Fuel Oil — Boiler No. 85, Bldg No. G-650

3. Furnish Type and Narrative Description of Proposed Control Device(s). (Complete Appropriate Supplemental Data Sheets for Control Device to be Installed and/or Operated. Include Make and Model Number of Control Device(s) and Number of Identical Units).
No. 6 oil fired, No control device.

4.

Contaminant Emitted:	Weight Rate of Emissions (lb/hr): Without Control Device	With Control Device	Control Efficiency (%): Without Control Device	With Control Device
SO_x and Particulant	56.44 lb/hr	N/A	N/A	N/A

5. Name and Address of Engineering Firm that Prepared Plans:

6. Ultimate Disposition of Collected Pollutants:

7. Date on Which Facilities are to be Completed and in Operation: October, 19 80

8. Indicate Period of Time for Which Facilities are Estimated to be Adequate: 20 Years

9. Estimate Cost of Air Pollution Control Device $ 0

10. Hours Facility is Operated Per Year: 8,760

Name: Major General D. B. Barker, USMC
(Responsible Individual of Company Purchasing/Operating Facility...PLEASE PRINT)

Mailing Address: Marine Corps Base
Camp Lejeune
North Carolina 28542

Signature and Title: DB Barker
D. B. BARKER, MAJOR GENERAL, USMC
Commanding General

Telephone Number: 451-5024

AQ-22

I. GENERAL DATA FOR PROCESSES

Attach detailed process engineering drawings, equipment drawings and flow diagrams for the process(es) or source(s) being constructed or altered.

Name of Process: Heating and Steam Plant

Total Weight of Materials Entering this Process: 161 Gal ~~lb~~/hr ~~xxxxxxx~~

Volume and Temperature of Air Flow Entering Control Device: _____ CFM @ _____ °F

Volume and Temperature of Effluent at Discharge Point to Atmosphere: _____ CFM @ _____ °F

Pollutant(s) to be Controlled: _____

Height of Process Stack or Vent Above Ground Level 41'7" ft. Inside area of Stack 4.35 ft^2.

Particulate Emission Rate (Before Control) 3.96 lb/hr

Particle Size Distribution: 0-5μ____%, 5-10μ____%, 10-20μ____%, 20-30μ____%, 30-40μ____%, 40-50μ____%, >50μ____%

Gaseous Emission(s): Name (Chemical Formula)	μg/m³, PPM	or lb/hr
SO_x		52.48

II. SUPPLEMENTARY DATA FOR INCINERATORS (Including Conical Incinerators)

Circle Type of Waste or Indicate Composition: Type 0 Type I Type II Type III Type IV

Combustible: _____% Non-Combustible: _____% Moisture: _____% Heat Value: _____BTU/lb

Total Waste Generated Per Day: _____ lb. Hours Incinerator will be Operated: _____ hrs/day

Design Capacity for Above Waste: _____ lbs/hr Manufacturer and Model Number; Approximate Cost: _____

Primary Chamber Volume: _____ $ft.^3$ Secondary Chamber Volume: _____ $ft.^3$

Air Requirements: Total Excess Air ____% Draft: Natural ____ Induced ____ Other ____

Overfire Air: ____cfm Underfire Air: ____cfm

Is there an Electronically Controlled, Exhaust Gas Temperature Modulated, Damper Installed on the Conical Incinerator for: Overfire Air Supply____, Underfire Air Supply____, Dome____ Temperature Set Point____°F

Flame Port Temperature: _____ °F Secondary Chamber Temperature: _____ °F

Is there a Continuous Exhaust Gas Temperature Recorder? Yes____ No____

Stack:
Inside Area ____$ft.^2$ Height ____ft. Gas Velocity ____ft/sec Temperature ____°F Fan Capacity ____cfm Stack Lined? _____

Is there a Wet Scrubber?

Yes ____ No ____ Flow Rate of H_2O into Scrubber ____gal/min Temperature Before Scrubber ____°F

Aux. Fuel: Oil _____ Gas _____ Other _____ Burner Rating: Primary Chamber _____BTU/hr Secondary Chamber _____BTU/hr Stack _____BTU/hr

Primary Burner: Is there a Preheat Timer? Yes ____ No ____ Preheating Time: _____min.

Secondary Burner or Afterburner: Is there a Timer? Yes ____ No ____ Length of Time Burner is Operated _____min.

Is the Timer Reset by Charging Door? Yes ____ No ____ Other Mode of Burner Control _____

Type of Feed: Manual _____ Automatic _____ If Automatic, Describe _____

Distance from Incinerator to Nearest Structure(s) in which People Live and/or Work.____ft.

Signature: _____ Title: _____

III. SUPPLEMENTARY DATA FOR FUEL BURNING SOURCES

*Attach detailed dimensioned drawing or sketch showing internal features of dryers, wood or coal fired boilers, and recovery boilers.

Type of Fuel Burning Source Boiler Stack Height Above Ground Level 41'7" ft. Inside Area of Stack 4.35 ft^2

Make and Model Number E. Keeler Company 15132 Volume of Furnace ____ ft^3

Specify Actual Amount of Each Fuel Used in Above Source (s):

Coal ____ lb/hr; Oil Grade 6 Amount 161 gal/hr, at 146,900 BTU/gal and ____ lb/gal or ____ lb/hr

Wood ____ lb/hr; Natural Gas ____ SCF/hr, at ____ BTU/SCF; Other ____

(Specify type, amount and heating value)

Specify Maximum Rating for Each Fuel Burning Source:

Coal ____ Oil 161 Wood ____ Natural Gas ____ Other ____

Maximum Sulfur Content of Fuel 2.05 % Specify Standby Fuel None Maximum % Sulfur ____

Type of Solid Fuel Burning Equipment Used: Hand Fired ___ Spreader Stoker ___ Underfeed Stoker ___ Chain Grate ___

Traveling Grate ___ Pulverizer ___ Cyclone Furnace ___ Other (Specify) ____

Ash Content of Fuel:

Coal ____ % Wood ____ % Other ____ %

Specify Method and Schedule of Tube Cleaning, if Applicable:

Lancing ____ Tube Blowing ____ Schedule ____

Emission Control Equipment (Describe in Detail in Sections IV and V)

Collection Device: Wet ____ Dry ____ Steam Injection ____ Air Injection ____ Is Collected Flyash Reinjected? ____

Draft on Boiler (Natural ____ Induced X) ____ cfm at ____ °F

Total Number of Fuel Burning Sources Within Property Boundaries: 3

Maximum Capacity Rating, by Type, for All Fuel Burning Units Excluding that Itemized Above: (Total Like Units) 2

Coal ____ lb/hr Wood ____ lb/hr Oil 650 gal/hr Natural Gas ____ SCF/hr

IV. SUPPLEMENTARY DATA FOR WET COLLECTION DEVICES

*Attach detailed engineering drawings of the control device and particle size versus removal efficiency curves.

Liquid Scrubbing Medium and Additives: ____

Total Liquid Injection Rate (Include Recirculated and Make-up Rates) ____ gal/min or gal/1000 ft^3

Operating Pressure Drop Across Device ____ in H_2O

ANSWER FOLLOWING QUESTIONS FOR SPECIFIC DEVICE:

VENTURI SCRUBBER: Inlet Area ____ in^2 Throat Area ____ in^2 Throat Velocity ____ ft/sec

GRAVITY SPRAY CHAMBER: Number of Nozzles ____ Liquid Droplet Size ____ u Co-Current ____ Countercurrent ____

WET CYCLONE:

Body Diameter ____ in Length ____ in

Inlet Area ____ in^2 Number of Nozzles ____

Outlet Area ____ in^2

PACKED TOWER OR PLATE TOWER:

Cross-Sectional Area ____ ft^2 Type of Plate ____

Length ____ ft Depth of Packing ____ ft

Number of Plates ____ Type of Packing ____

OTHER WET COLLECTION DEVICES: GIVE COMPLETE DESCRIPTION INCLUDING DESIGN PARAMETERS AND DETAILED ENGINEERING DRAWINGS.

Signature: ____ Title: ____

V. SUPPLEMENTARY DATA FOR DRY COLLECTION DEVICES

*Attach detailed engineering drawings of the control device and particle size versus removal efficiency curves.

BAGHOUSES: Cloth Area _____ ft^2

Bag Material _____

Number of Compartments _____

Pressure - Drop Total _____ in H_2O

Method of Cleaning _____

Air-to-Cloth Ratio _____ ft/min

Time Between Cleaning _____ mins, hrs

ELECTROSTATIC PRECIPITATORS:

GENERAL:

Effective Area of Grounded Collector Plates _____ ft^2

Number of Compartments or Chambers _____ Number of Cells per Compartment _____

Electrical Field Gradient at the Discharge or Emitting Electrodes _____ KV/in

Average Electrical Field Gradient at the the Grounded Collecting Electrodes _____ KV/in

Fields of Treatment _____ Potential Applied to Emitting Wires _____ KV

SINGLE STAGE TYPE:

Distance Between Emitting Wires and Collecting Plates _____ in.

Number of Isolatable Bus Sections _____ Corona Power _____ Watts/1000 cfm

TWO STAGE TYPE:

Distance Between First Stage Emitting Electrodes and Field Receiver Electrodes (Ground) _____ in

Potential Applied to Second Stage Emitting Plates _____ KV

Distance Between Second Stage Emitting Plates and Grounded Collection Plates _____ in

CYCLONES/MULTICYCLONES:

Simple Cyclone

Diameter _____ in

Inlet Dimensions _____

Outlet Dimensions _____

Pressure Drop _____ in H_2O

Number of Cyclones _____

Multicyclone

Diameter _____ in

Inlet Dimensions of Individual Cyclone _____

Outlet Dimensions of Individual Cyclone _____

Pressure Drop _____ in H_2O

Number of Cyclones _____

OTHER DRY COLLECTION DEVICES: GIVE COMPLETE DETAILED ENGINEERING DESCRIPTION AND DRAWINGS.

Signature: _____ Title: _____

Boiler 85

VI. AREA DIAGRAM

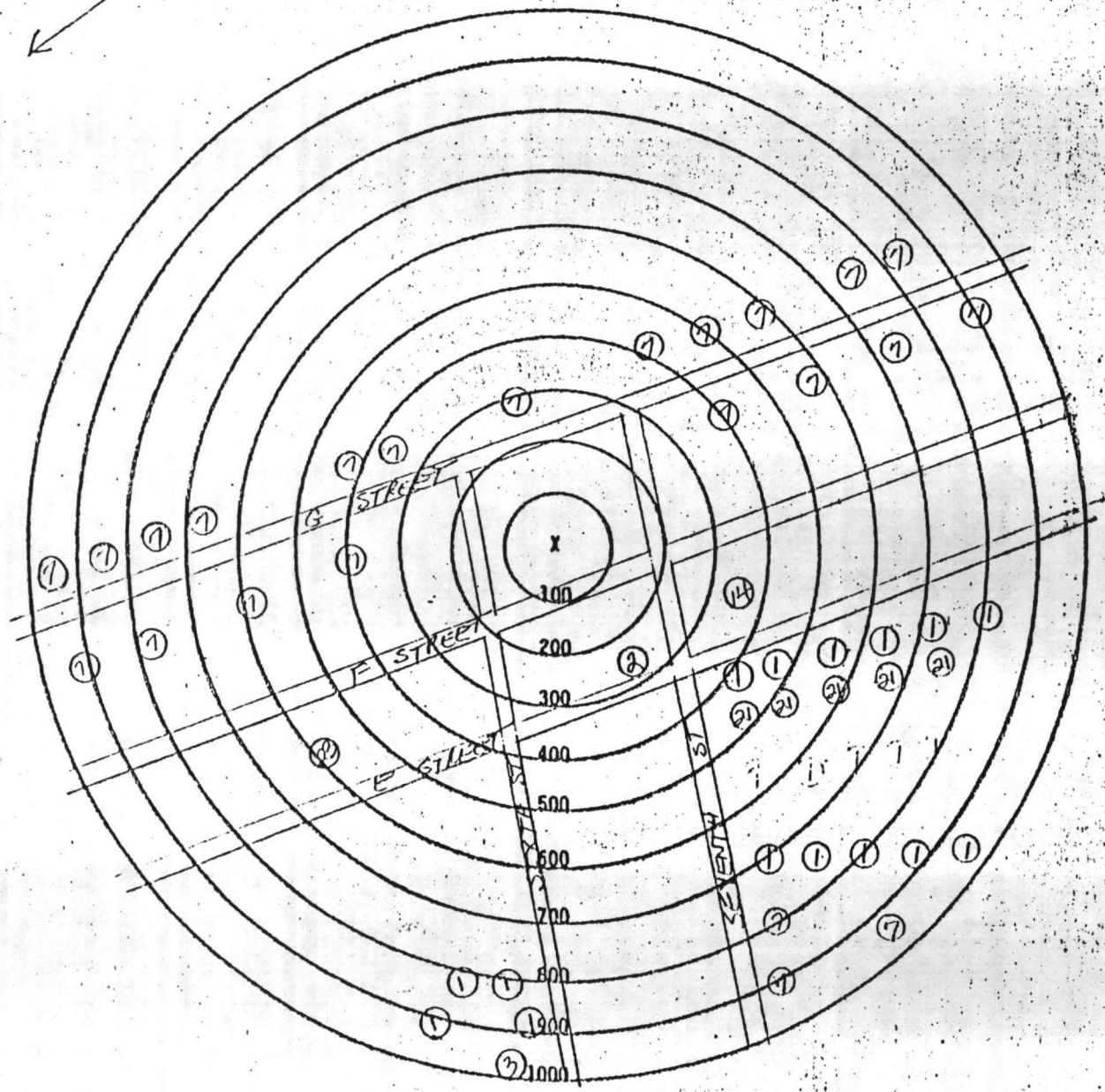

Owner Marine Corps Base, Camp Lejeune, N.C.

Location Seventh Street, Camp Geiger
(Give Street Address)

INSTRUCTIONS:

1. Show all surrounding buildings and roads within 1000 feet of subject equipment which is located at center of circles.
2. Indicate location and type of building by the use of small numbered circles with the description below.
3. Show roads as lines representing the road edges. Indicate street names and highway numbers.
4. Show wooded or cleared areas by approximate boundary lines and the words "woods", "cleared", "cornfield", etc.
5. Indicate direction of north by arrow.

CODE	DESCRIPTION
1	Barracks
2	Mess Hall
3	Administration
4	
5	
6	
7	Warehouse
8	
9	
10	
14	Dispensary
EXAMPLE	1 Church
	2 Residence
21	Washroom
23	NCO Club

X Indicates location of equipment.

File
7-A

UNITED STATES MARINE CORPS
MARINE CORPS BASE
CAMP LEJEUNE, NORTH CAROLINA 28542

IN REPLY REFER TO

FAC:KPM:mkc
6280
26 May 1981

FIRST ENDORSEMENT on Regional Supervisor, NC Dept of Natural Resources & Community Development, Div of Environ Mgmt ltr of 20 May 1981

From: Commanding General
To: Base Maintenance Officer
Via: Staff Judge Advocate

Subj: Permit No. 4640, MCBCL for construction and/or operation of air pollution abatement facilities and/or emission sources

1. Forwarded for appropriate action.

K. P. Millice Jr.
K. P. MILLICE, Jr.
By direction