ASSISTANT CHIEF OF STAFF, FACILITIES
HEADQUARTERS, MARINE CORPS BASE

DATE 4-23-79

TO:

[BASE MAINT O]

PUBLIC WORKS O

COMM-ELECT O

MOTOR TRANSPORT O

DIR, QUARTERS & HOUSING

DIR, BOQ/BSQ

BASE FIRE CHIEF

ATTN: _____

1. Attached is forwarded for info/action.

2. Please initial, or comment, and return all papers to this office.

3. Your file copy.

"LET'S THINK OF A FEW REASONS
WHY IT CAN BE DONE"

UNITED STATES MARINE CORPS
MARINE CORPS AIR STATION
(HELICOPTER)
NEW RIVER, JACKSONVILLE
NORTH CAROLINA 28545

204:HBM:cbm
10340
19 Apr 1979

From: Commanding Officer
To: Commanding General, Marine Corps Base, Camp Lejeune, N. C. 28542
(AC/S Facilities)

Subj: Oil Skimming System

Encl: (1) Oil Skimmers, Inc., ltr of 9 April 1979 w/encl

1. Enclosure (1) discusses and provides information on oil skimming devices provided by Oil Skimmers, Inc.

2. The use of an oil skimmer, as recommended in enclosure (1), will resolve and may eliminate fuel from entering waterways.

3. Enclosure (1) is provided as information which may assist in the procurement of the oil skimmer.

P. F. ANGLE
By direction

Copy to:
Base Maint, MCB, CLNC (w/o encl)

OIL SKIMMERS, INC.

1803 W. ROYALTON ROAD • CLEVELAND, OHIO 44147

Sales Office (216) 237-4600
TWX 810 427 9130

Shipping and Receiving (216) 237-2188
CABLE CODE: Skimmers Cleveland

April 9, 1979

Commanding Officer
Marine Corps Air Station
(Helicopter)
New River, Jacksonville, N.C. 28540

Dear Sir:

During my trip to Washington, D.C., I was guided to Mr. James M. Kearns, Jr., the Environmental Engineer of the Marine Corp., for a presentation on the Brill Oil Skimmer.

After presenting the several advantages we offer with this unique, new type oil skimmer, I requested that we would like to send information to each base that could have a need for removing scum, oils and greases from any waste water containment areas.

Would you please pass this information along to the proper personnel of the Base Facility and O&M Staff, for review. I plan to phone in 6 to 8 weeks to review this information and to answer any questions that anyone may have.

Thank you for taking the time to leaf through this information. We believe we can be of assistance on existing and new applications of waste water systems.

Sincerely yours,

OIL SKIMMERS, INC.

John F. Kadas

John F. Kadas,
National Sales Manager

JFK/map
Enclosure
CC: File #27A

JOHN F. KADAS
Sales Manager

OIL SKIMMERS, INC.

1803 W. ROYALTON ROAD
CLEVELAND, OHIO 44147

PHONE (216) 237-4602

No Postage Stamp Necessary If Mailed in the United States

BUSINESS REPLY MAIL

FIRST CLASS PERMIT NO. 20814 CLEVELAND, OHIO

postage will be paid by

OIL SKIMMERS, INC.

1803 W. ROYALTON ROAD

CLEVELAND, OHIO 44147

OIL SKIMMERS, INC. has developed the answer to oil spill control, and offers:—

PROMPT DELIVERY – STOCK ON SHELVES
Brill Oil Skimmer Model 6V
Brill Oil Skimmer Model 5H
Convenient Mounting Systems:
Cantilever Booms: Six foot, or Eight foot
Balanced Booms:—8′, 12′, 18′, 24′.
Angle Frame Mount in Valult or on Floor

OIL SKIMMERS, INC.,
1803 W. Royalton Road
Cleveland, Ohio 44147

Telephone: (216) 237-4600
TWX 810 427 9130
CABLE CODE: Skimmers Cleveland

Printed in U. S. A.

PLEASE SEND ME MORE INFORMATION –

NAME _____ TITLE _____

COMPANY _____ STREET _____

CITY _____ STATE _____ ZIP _____

TELEPHONE _____

PLEASE CHECK BULLETINS OF INTEREST TO YOU –

__760822 Project study to stop the discharge of oil with waste water.
__760822A Layout of the system to stop the discharge of oil with waste water.
__760823 Causes of oil / water mixing.
__760824 Flow measurements and calculations.
__760825 Design of the laminator plate and retention basin.
__760826 Design of the flow control structure.
__760827 Decanter
__760828 Water based coolants on hot aluminum and most metal cold rolling mills.
__760829 Brill Skimmers in hot rolling mills.
__760830 Brill Skimmers in the glass bottle industry.
__760831 Prevention of stream pollution by oil from railroad yards.
__760911 Water conservation.
__760921 Prevention of water pollution by oil from power plants.

OUR PROBLEM INCLUDES (please circle)

INDOOR OUTDOOR BOTH TANK SUMP BASIN POND DITCH

OIL / WATER SEPARATION NEW APPLICATION

EXISTING SYSTEM IS INADEQUATE

TYPE OF OIL / GREASE POLLUTANTS TO BE SKIMMED (please circle)

LIGHT MEDIUM HEAVY OTHER
(Any floating effluent that has an oily base could be skimmed)

A ROUGH SKETCH OR DRAWING OF OUR PROBLEM IS ENCLOSED (YES) (NO)

BACKGROUND INFORMATION FOR PLANNING THE INDUSTRIAL WASTE WATER POLLUTION CONTROL SYSTEM

The capital cost, operating cost and the effectiveness of an industrial waste water system are all dependent upon the care and skill of the people who plan the system. A well planned system often costs only twenty percent as much as a poorly planned system. The well planned system is also far more reliable and less costly to operate.

The best plans are usually prepared by a good, experienced consulting engineer working in very close cooperation with a well-informed company management and engineering staff.

The key to success is the early recognition of the inherent differences between an industrial waste water system and a municipal system.

A municipal system must treat all of the water because it is contaminated, The same treatment process is used for all of the water.

In the industrial waste water system only a small portion of the water is normally contaminated. Most of the water can be discharged without any treatment if it is isolated from contaminated water. The second critical difference is the nature of the contaminants. Each contaminant usually requires a specific treatment. Additional water in the treatment system usually raises the cost of the treatment.

The owner supplies the equipment to detain the oil contaminated water until the oil can be floated to the surface. Oil Skimmers, Inc., supplies the equipment to automatically remove the oil and deposit it safely in a closed vessel for disposal.

The equipment operates continuously because no one knows when the oil will come. It operates reliably for long periods without human attention. Floating solids, varying viscosities from deisel oil to grease, buildup of sands and sediments and grit-laden oil are all normal conditions in industrial waste water. They have little or no effect upon the reliability of this equipment compared to the problems they create for equipment that was designed for the relatively clean uniform conditions encountered in refineries or ships ballast tanks.

Oil is one of the easiest contaminants to remove from water. If it is not removed it usually interferes with the treatment of any other contaminant. The steps taken to prevent oil contamination are the normal preliminary steps required for a total pollution control system so this work is not wasted if more stringent requirements must be met.

If oil contaminated water is discharged into a public waterway, it is easily detected by sight, taste or smell. When public indignation is aroused, the authorities insist upon prompt and strict compliance with all water pollution regulations.

Oil Skimmers, Inc., has selected successful solutions to typical problems encountered in hundreds of installations over an eight year period. This information was written up in our bulletins. Some of the bulletins apply only to specific industries, such as: glass bottle plants, railroad yards, etc. Others cover specific subjects, e. g., design of the inlet of the settling basin.

There are many problems that may not be widespread enough to warrant the printing of a bulletin, but our staff may have experienced similar problems and can help on an individual basis.

Each project is unique and requires careful "on the site" study of all the factors involved. Oil Skimmers, Inc., is not staffed to perform engineering services on individual projects. The services of an engineer who is experienced in the industrial waste water field is highly recommended. It is his skill and knowledge of local conditions that are valuable for the success of the project.

A return addressed folder is enclosed for your convenience. Please fill in the blank spaces with the information requested, as well as indicating the bulletins that are pertinent. Occasionally the information that you supply will enable our staff to supply additional information that will be helpful.

1803 WEST ROYALTON ROAD
CLEVELAND, OHIO 44147
TELEPHONE: (216) 237-4600

OIL SKIMMERS, INC.

1061PS

Printed in U. S. A.

TWX 810 427 9130

CABLE CODE: Skimmers Cleveland

MODEL 6V

PRICE LIST

BRILL SKIMMERS

For further information, call or write: **OIL SKIMMERS, INC.**
1803 W. Royalton Road
Cleveland, Ohio 44147
Phone: (216) 237-4600

Order from OIL SKIMMERS, INC., c/o YOUR DEALER:

SKIMMER	Model 6V – Base drilled and coupling bored for motors (not included) listed below	$ 1,980.00
HEAT ROD	(used in cold weather applications) 300W, 120V or 240V, single phase	60.00
MOTORS	½HP, 1725 rpm, NEMA No. 56, foot mounted frame in the following voltages and enclosures:	
	(a) Totally enclosed, fan cooled, ball bearing, single phase, 60Hz, 115/230V, capacitor start.	120.00
	(b) Totally enclosed, fan cooled, ball bearing, three phase, 60Hz, 230/460V G.E.	130.00
	(c) Totally enclosed, non-vented, ball bearing, three phase, 60Hz, 230/460V	120.00
	(d) Explosion proof, NEMA Class I, Group D, single phase, 60Hz, 115/230V, capacitor start	200.00
	(e) Explosion proof, NEMA Class I, Group D, three phase, 60Hz, 230/460V	215.00
	(f) Three phase, 60Hz, 575V	130.00
	(g) Three phase, 50/60Hz, 550V	160.00

Approximate Shipping Weight: 90 to 115 lbs.

SC 15 SAFETY COVER	75.00
WIND GUARD	60.00
COLLECTOR TUBE ____feet, per foot	3.00

See Drawing 760713 for method of calculating length of collector tube.

SPARE PARTS INVENTORY *(recommended)*

One	Collector Tube of proper length for your application	
Six	4R	Ceramic Replacement Wear Pieces
Two	2V	Rim Scrapers

QUANTITY PURCHASE DISCOUNT

The following discount schedule applies if machines or identical parts are ordered in quantity on one order at the same time. Shipping dates and destination may be mixed on one order.

1 to 5 inclusive	List, net
6 to 10 inclusive	List, less 5%
11 to 20 inclusive	List, less 10%
More than 20	Consult factory

NET SHIPPING WEIGHTS

6V Machine with Motor	115 lbs.
6V Machine without Motor	90 lbs.
Drive Wheel	2 lbs.
Collector Tube . per foot	3 oz.
Pulley Scraper	6 oz.
Coupling	8 oz.

TERMS: 1%–Ten Days, Net 30 Days. (1½% monthly surcharge after 30 days. 18% Annual Rate).

FOB – Cleveland, Ohio USA

1803 WEST ROYALTON ROAD
CLEVELAND, OHIO 44147
TELEPHONE: (216) 237-4600

OIL SKIMMERS, INC.

Effective November 1, 1978. Subject to change without notice.

Printed in U. S. A.

TWX 810 427 9130
CABLE CODE: Skimmers Cleveland

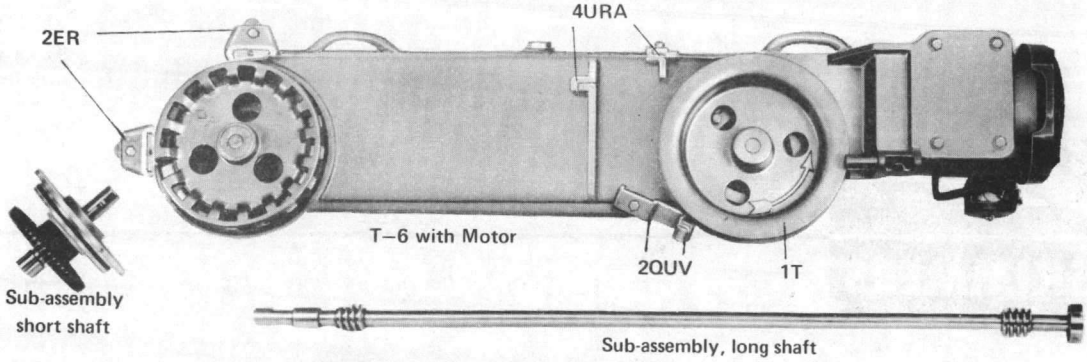

PARTS – PRICES

Part No. 2E	Pressure Block Adapter (T-6)	$ 5.25
2ER	Pressure Block Assembly (complete with 4R Ceramic Wear Piece)	10.40
2QUV	Pulley Wheel Scraper (complete)	12.60
2QU	Pulley Wheel Scraper Holder	9.25
T6UD	Scraper Adapter	26.25
5	Collector Tube (per foot)	3.00
Part No. 610UD	Conversion Bracket (complete) Pressure Blocks and Scrapers, Five (5) Ceramic Wear Pieces	$ 75.00
8	Reconditioning of Reducers (the complete set of reducers will be reconditioned by the factory)	175.00
15T	Shaft (Long or Short) Sub-assembly, complete	100.00

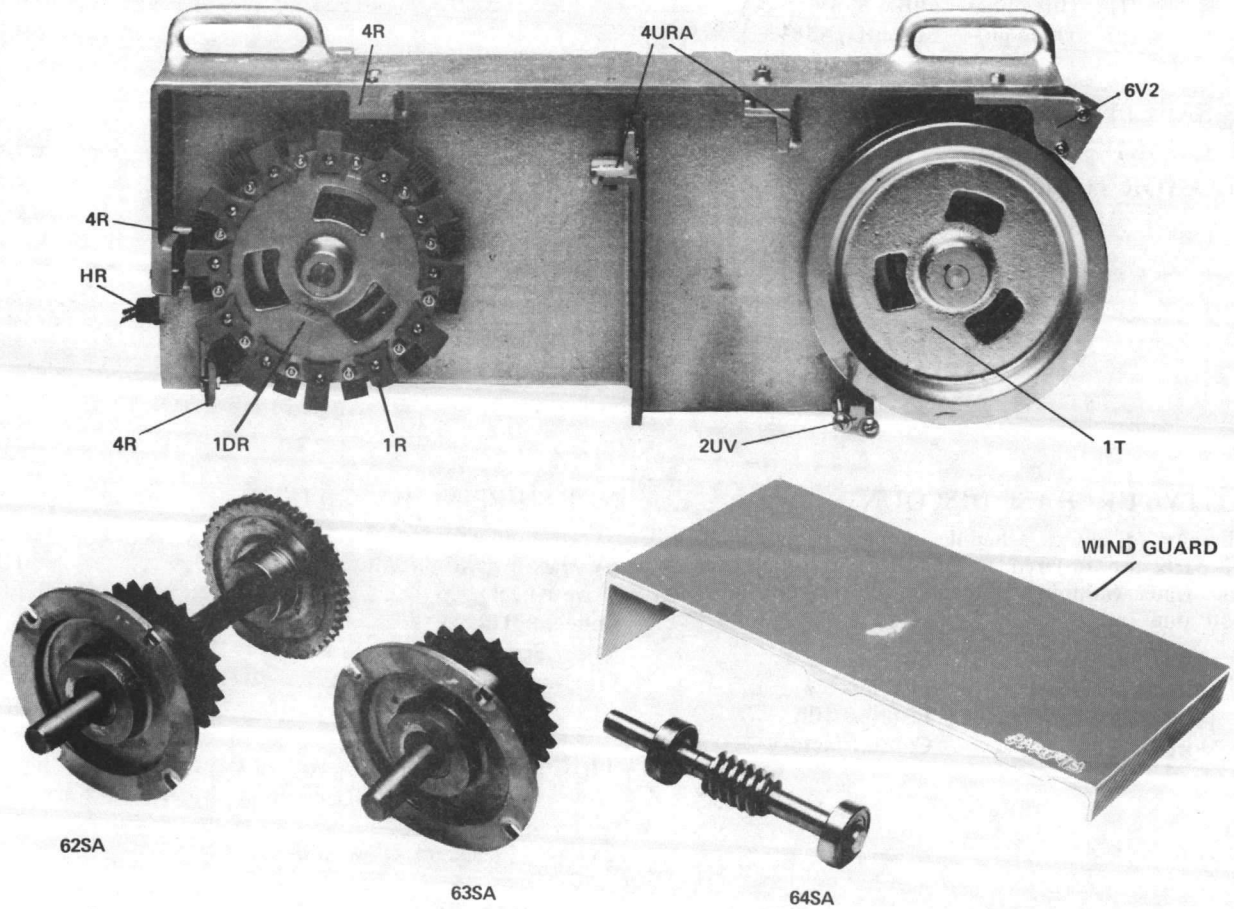

PARTS – PRICES

Part No. 1D	Hub	$ 40.00
1DR	Drive Wheel, Ceramic (complete)	85.00
1R	Fingers, Ceramic (each)	2.25
1T	Pulley Wheel	52.00
2UV	Pulley Wheel Scraper (complete)	7.25
2U	Pulley Wheel Scraper Holder	5.00
2V	Pulley Rim Scraper	2.75
4R	Ceramic Replacement Wear Piece (replacement for Scraper and Pressure Blocks each)	5.75
Part No. 4UR	Tube Scraper Holder	$ 7.00
6V2	Bracket (complete with two 4R)	20.00
4URA	Tube Scraper Assembly (complete with 4R Ceramic Wear Piece)	12.75
5	Collector Tube (per foot)	3.00
8T	Coupling (for Model 6V)	10.00
62SA	Worm Gear Sub-assembly	100.00
63SA	Sprocket Sub-assembly	50.00
64SA	Worm Sub-assembly	85.00
6VLB	Leveling Bracket	15.00

Maintenance manuals enclosed. Extra manuals are available at $.50 each. Certified prints are available at $1.50 each. Sepia reproducibles are available at $4.50 each.

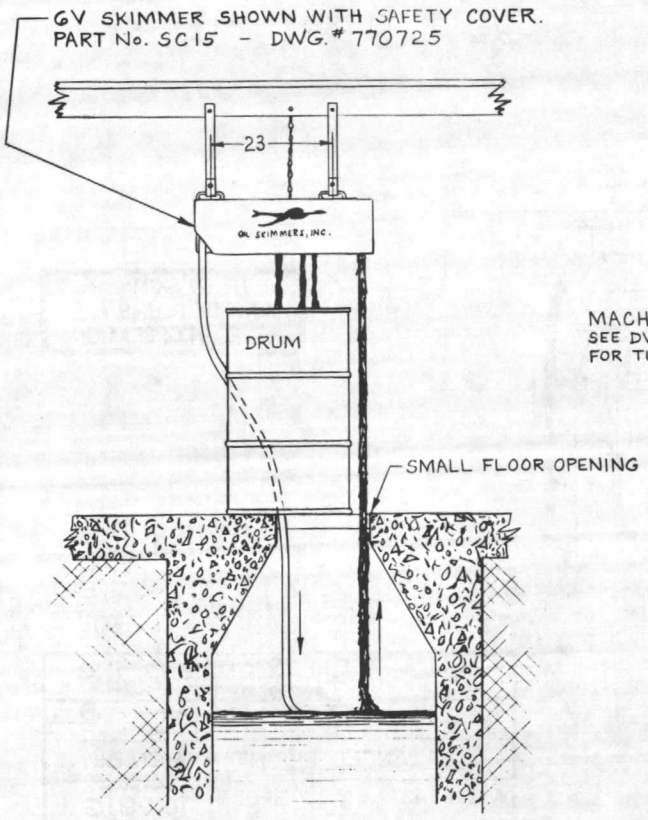

HANGING SKIMMER SET-UP W/SAFETY COVER

NO SPOUT NEEDED WHEN MOUNTED OVER DRUM.

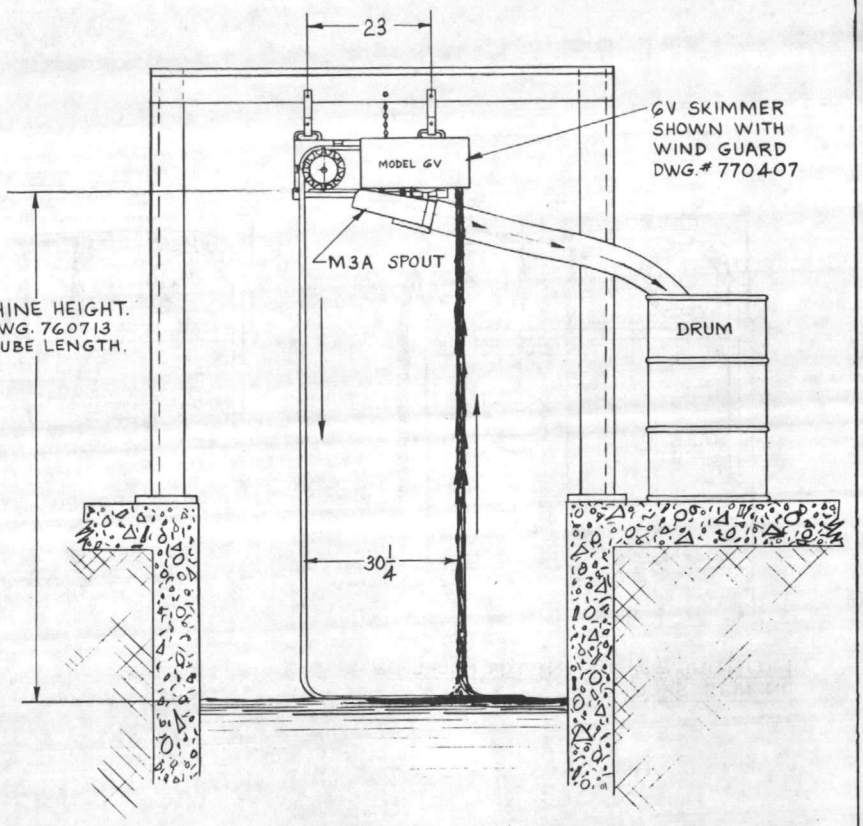

HANGING SKIMMER SET-UP W/WIND GUARD & M3A SPOUT.
CAN ALSO BE MOUNTED WITH SPOUT IN OPPOSITE POSITION
SEE DWG. # 771003

NOTE:
WHEN HANGING THE GV SKIMMER, USE THE LEVELING BRACKET WITH CHAIN OR CABLE AND DRAW UP TILL LEVEL.

THE 6V SKIMMER MUST BE PLUMB AND LEVEL IN OPERATION

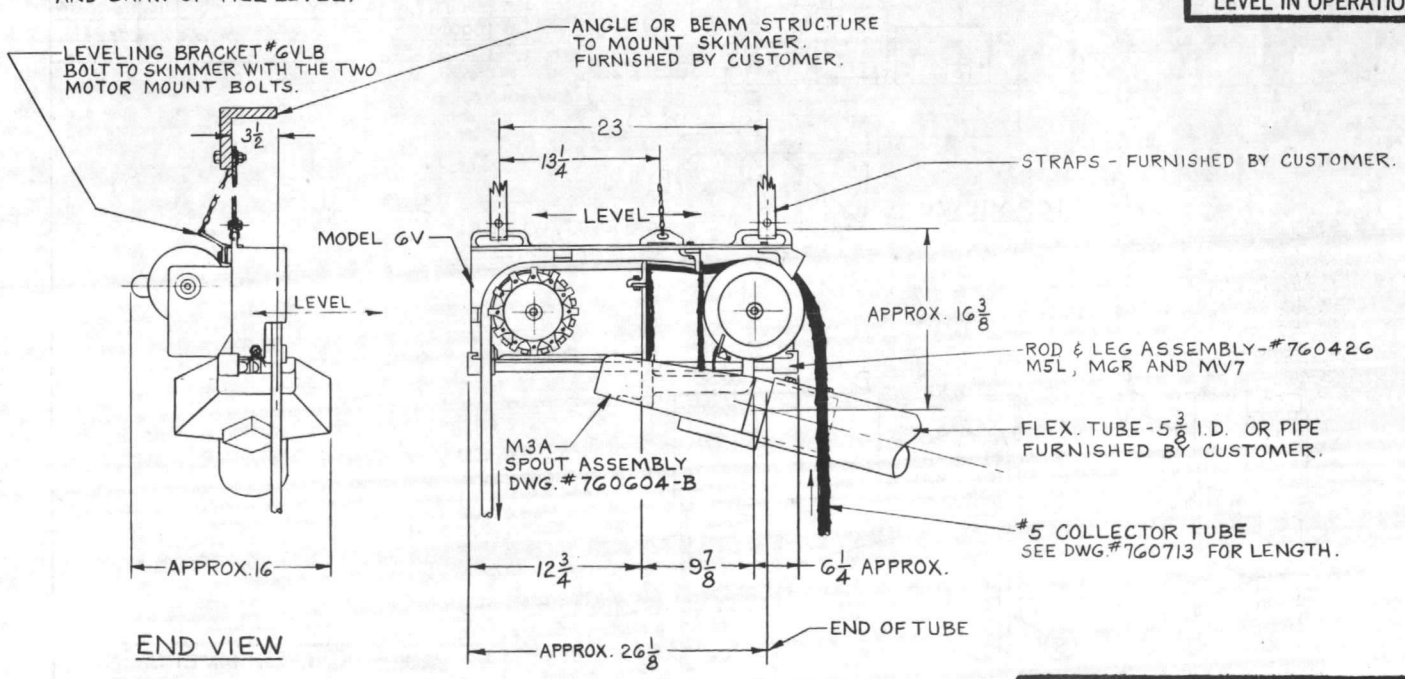

END VIEW

SIDE VIEW

OIL SKIMMERS, INC. Cleveland, Ohio		
SCALE:	APPROVED BY:	DRAWN BY: C.D.
DATE: 11-3-76		REVISED
HANGING MOUNT FOR MODEL GV		
LEFT SIDE		761103-A

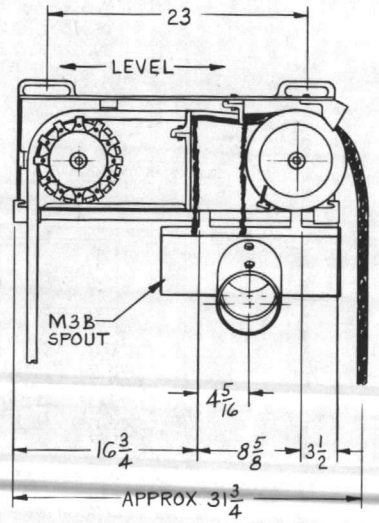

MOUNTING DIMENSIONS FOR MODEL GV ON M3B SPOUT.

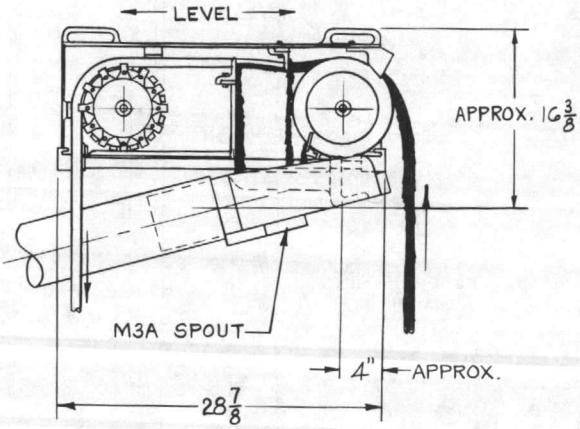

ON M3A SPOUT

THE 6V SKIMMER MUST BE PLUMB AND LEVEL IN OPERATION

OIL SKIMMERS, INC. Cleveland, Ohio		
SCALE:	APPROVED BY:	DRAWN BY: C. D.
DATE:		REVISED
6V BALANCED MOUNT ASSEMBLY		
WITH M3A & M3B SPOUT		DRAWING NUMBER 760916

ITEM	PART	QTY.	DWG. No.
1	MODEL 6V	1	751210
2	WIND GUARD - PART #15	1	761022
3	SPOUT #M3A SHOWN	1	760604
4	BOOM	1	760311
5	#5 COLLECTOR TUBE	1	760713

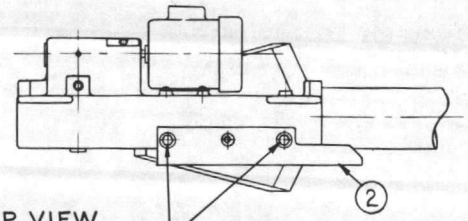

TOP VIEW

1/4 - 20 NC - 3/4" LONG BOLTS W/WASHERS
2 REQ'D.

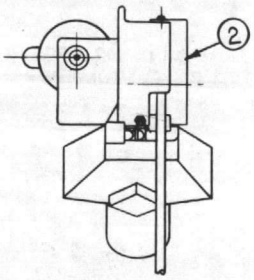

END VIEW

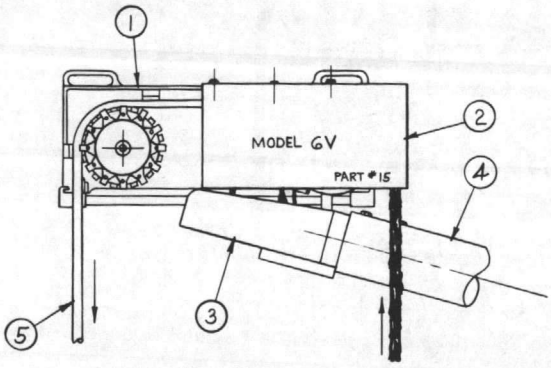

FRONT VIEW

PRINTED IN U. S. A.

OIL SKIMMERS, INC. Cleveland, Ohio		
SCALE:	APPROVED BY:	DRAWN BY: C. D.
DATE: 4-7-77		REVISED
6V WIND GUARD ON SKIMMER		
		DRAWING NUMBER 770407

MODEL 5H
PRICE LIST

BRILL SKIMMERS

For further information, call or write: OIL SKIMMERS, INC.
1803 W. Royalton Road
Cleveland, Ohio 44147
Phone: (216) 237-4600

Order from OIL SKIMMERS, INC. c/o YOUR DEALER:

SKIMMER Model 5H — Base drilled and coupling bored for motors (not included) listed below ..... $ 1,100.00

MOTORS ½HP, 1725 rpm, NEMA No. 56, foot mounted frame in the following voltages and enclosures:

(a)	Totally enclosed, fan cooled, ball bearing, single phase, 60Hz, 115/230V, capacitor start ..	120.00
(b)	Totally enclosed, fan cooled, ball bearing, three phase, 60Hz, 230/460V G.E.	130.00
(c)	Totally enclosed, non-vented, ball bearing, three phase, 60Hz, 230/460V	120.00
(d)	Explosion proof, NEMA Class I, Group D, single phase, 60Hz, 115/230V, capacitor start .	200.00
(e)	Explosion proof, NEMA Class I, Group D, three phase, 60Hz, 230/460V	215.00
(f)	Three phase, 575V	130.00
(g)	Three phase, 50/60Hz, 550V	160.00

Approximate shipping weight: 65 to 90 lbs.

DECANTING KIT (Cast Iron), Less Tank	160.00
DECANTING TANK (Stainless Steel), with Decanter Kit Complete	440.00
DECANTING TANK HEAT ROD 85W/120V	60.00
COLLECTOR TUBE ..... feet, per foot	3.00

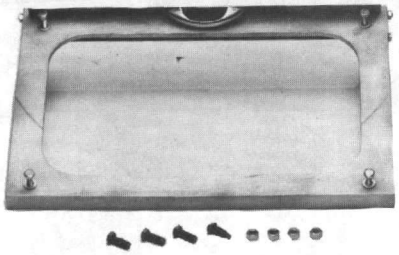

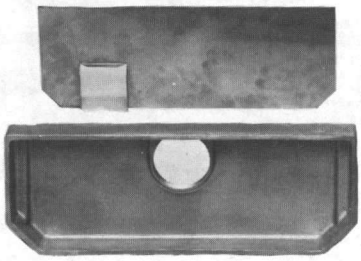

SPARE PARTS INVENTORY *(recommended)*

One	Drive Wheel, Ceramic	85.00
Four	Ceramic Wear Piece (4R) ..... each. .	5.75
One	Collector Tube ..... per foot	3.00

QUANTITY PURCHASE DISCOUNT

The following discount schedule applies if machines or identical parts are ordered in quantity on one order at the same time. Shipping dates and destination may be mixed on one order.

1 to 5 inclusive	List, net
6 to 10 inclusive	List, less 5%
11 to 20 inclusive	List, less 10%
More than 20	Consult factory

TERMS: 1%–Ten Days, Net 30 days. (1½% monthly surcharge after 30 days. 18% Annual Rate).

FOB–Cleveland, Ohio, USA

MOUNTING KIT

No. 58	TOP (pan bracket with door)	$ 60.00
No. 57	BOTTOM (pan with plate)	75.00

1803 WEST ROYALTON ROAD
CLEVELAND, OHIO 44147
TELEPHONE: (216) 237-4600

OIL SKIMMERS, INC.

Effective November 1, 1978. Subject to change without notice.

TWX 810 427 9130

CABLE CODE: Skimmers Cleveland

Printed in U. S. A.

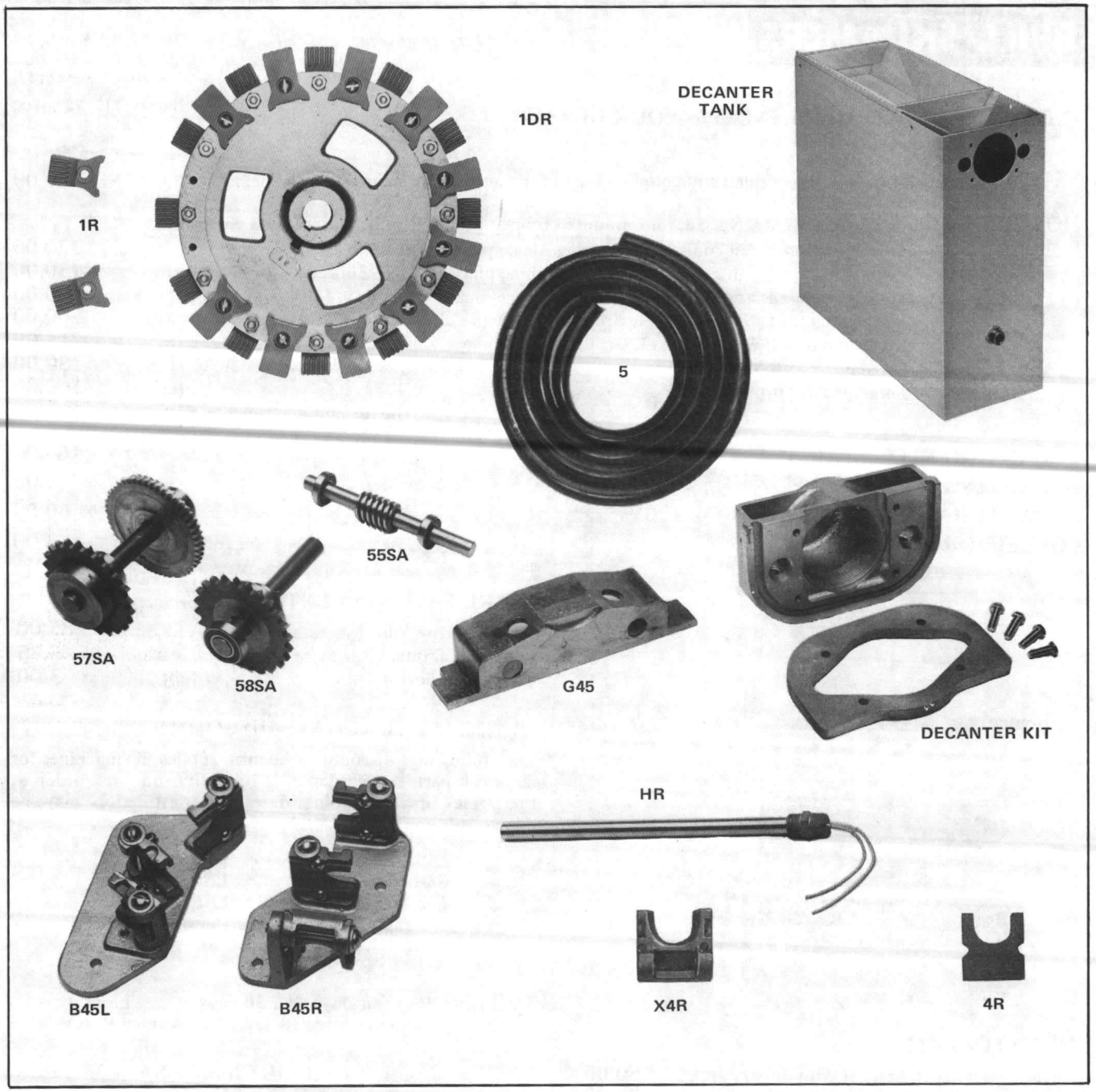

PARTS – PRICES

Part No. 1DR	Drive Wheel, Ceramic	$ 85.00
1D	Hub	40.00
1R	Fingers, Ceramic (each)	2.25
4R	Replacement Wear Piece, Ceramic (replacement wear element for scraper and pressure block) . . . . each	5.75
X4R	Tube Scraper Holder (for Model 5H)	6.50
5HVG	Vapor Seal Gasket 3/8″ OD each	3.25
5	Collector Tube . . . . . .per foot	3.00
8T	Coupling	10.00
56	Shaft Guard	6.00
G45	Wheel Guard (Model 5H)	22.00
B45R	Scraper Bracket	37.00
B45L	P & G Block	37.00
57SA	Sprocket and Worm Gear Sub-assembly	100.00
55SA	Worm Sub- assembly	85.00
58SA	Sprocket Sub-assembly	40.00

Maintenance manuals enclosed. Extra manuals are available at $.50 each. Certified prints are available at $1.50 each. Sepia reproducibles are available at $4.50 each.

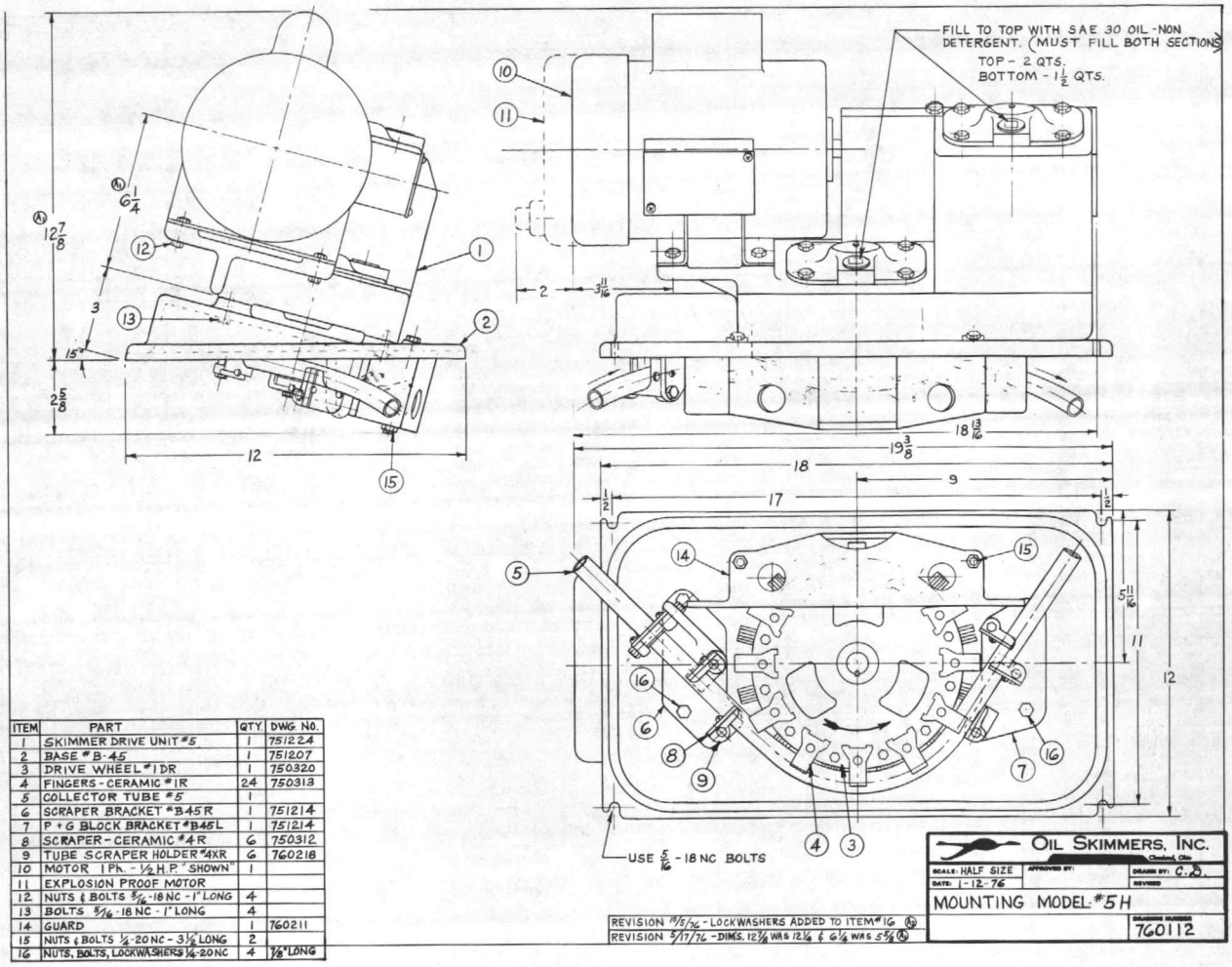

ITEM	PART	QTY.	DWG. NO.
1	SKIMMER DRIVE UNIT #5	1	751224
2	BASE #B-45	1	751207
3	DRIVE WHEEL #1DR	1	750320
4	FINGERS - CERAMIC #1R	24	750313
5	COLLECTOR TUBE #5	1	
6	SCRAPER BRACKET #B45R	1	751214
7	P + G BLOCK BRACKET #B45L	1	751214
8	SCRAPER - CERAMIC #4R	6	750312
9	TUBE SCRAPER HOLDER #4XR	6	760218
10	MOTOR 1 Ph. - ½ H.P. "SHOWN"	1	
11	EXPLOSION PROOF MOTOR		
12	NUTS & BOLTS 5/16 - 18 NC - 1" LONG	4	
13	BOLTS 5/16 - 18 NC - 1" LONG	4	
14	GUARD	1	760211
15	NUTS & BOLTS ¼ - 20 NC - 3½ LONG	2	
16	NUTS, BOLTS, LOCKWASHERS ¼ - 20 NC	4	⅞" LONG

REVISION 10/5/76 - LOCKWASHERS ADDED TO ITEM #16 (B)
REVISION 5/17/76 - DIMS. 12⅞ WAS 12¼ & 6¼ WAS 5⅝ (A)

OIL SKIMMERS, INC. Cleveland, Ohio
SCALE: HALF SIZE | APPROVED BY: | DRAWN BY: C.D.
DATE: 1-12-76 | REVISED
MOUNTING MODEL #5H
DRAWING NUMBER 760112

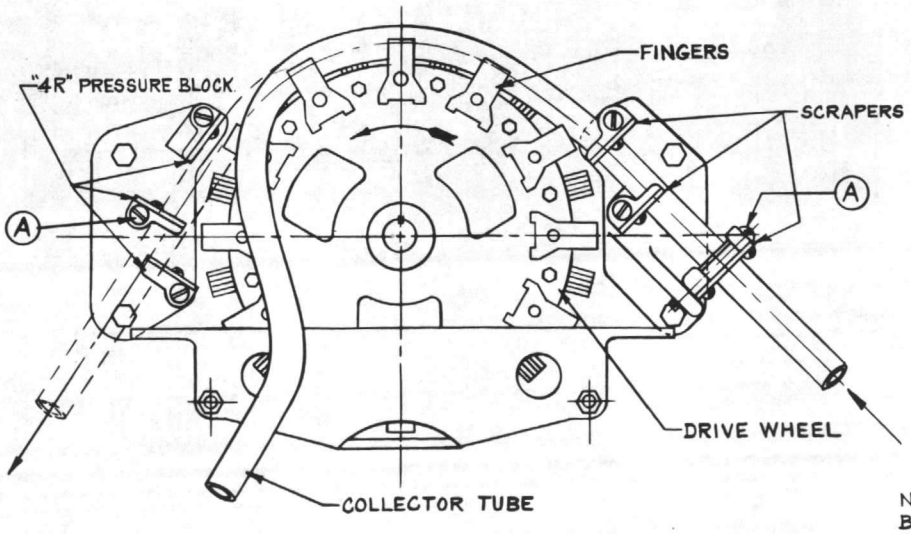

NOTE:
BEFORE INSTALLATION, THE COLLECTOR TUBE MUST BE HUNG IN UNTWISTED CONDITION FOR NOT LESS THAN 2 DAYS.

TO INSTALL COLLECTOR TUBE

LOOSEN SCREW (ITEM (A)) AND SWING SCRAPER. PLACE TUBE ON DRIVE WHEEL FINGERS AND ROTATE DRIVE WHEEL WITH TUBE BETWEEN SCRAPERS AND FINGERS, THEN BETWEEN PRESSURE BLOCKS AND FINGERS AS SHOWN. THEN TIGHTEN THE TUBE SCRAPERS (ITEM (A)) BACK INTO PLACE. TO ROTATE DRIVE WHEEL, PLACE COIN OR KEY IN MOTOR SHAFT SLOT AND TURN WHILE PLACING TUBE OVER DRIVE WHEEL FINGERS.

OIL SKIMMERS, INC. Cleveland, Ohio
SCALE: HALF SIZE | APPROVED BY: | DRAWN BY: C.D.
DATE: 5-12-76 | REVISED
TO INSTALL COLLECTOR TUBE ON 5H
DRAWING NUMBER 760428

ITEM	PART	QTY.	DWG. No.
1	MODEL #5 HORIZONTAL	1	760112
2	MOUNTING PAN ASSEMBLY	1	760128
3	NUT + WASHER 5/16-18 NC	4	
4	BOLT + WASHER 5/16-16NC-3/4" LONG	2	
5	COLLECTOR TUBE #5	1	
6	CUSTOMER TANK		
7	3" N.P.T. PIPE - FURNISHED BY CUST.		

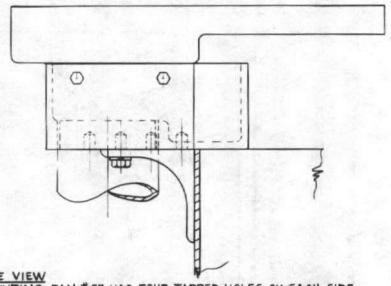

SIDE VIEW
MOUNTING PAN #57 HAS FOUR TAPPED HOLES ON EACH SIDE 3/8-16 NC - 1/2" DEEP. USE ONE ON EACH SIDE TO BOLT ONTO BRACKETS OR ANGLE IN DESIRED LOCATION.

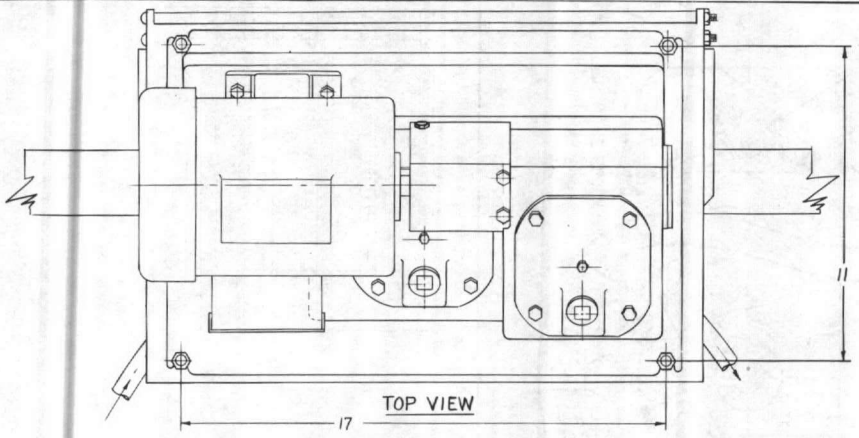

TOP VIEW

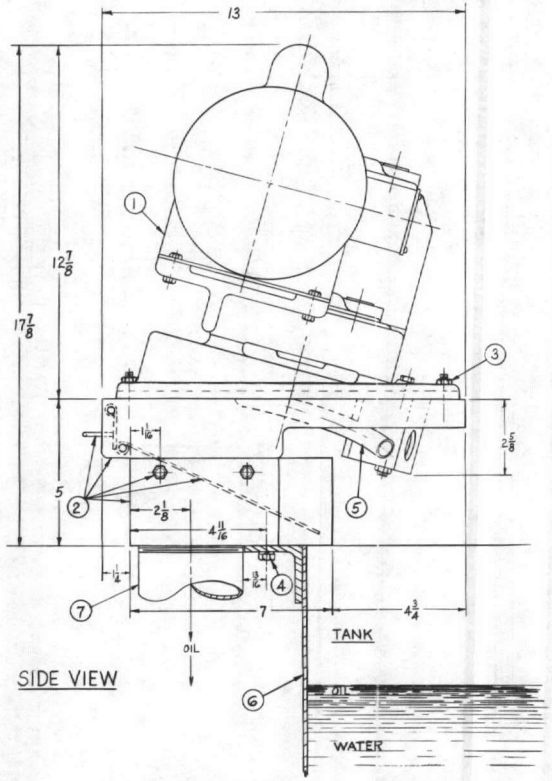

SIDE VIEW

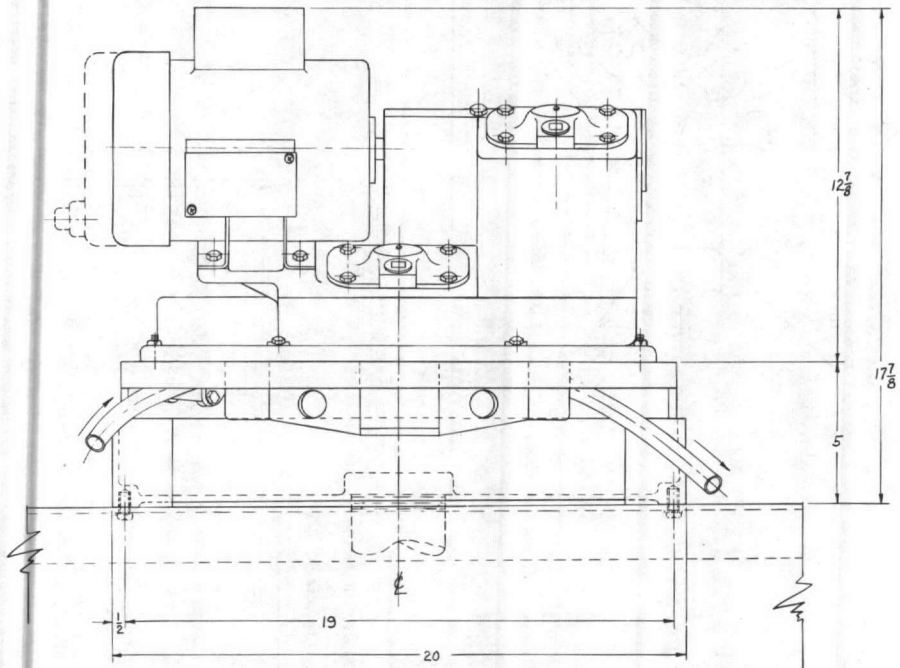

FRONT VIEW

REV. 3/15/78 - EXTRA DIM'S. & VIEW ADDED.

OIL SKIMMERS, INC.
Cleveland, Ohio

SCALE: HALF SIZE	APPROVED BY:
DATE: 3-3-76	DRAWN BY: C.J.
	REVISED

TANK MOUNTING ARRANGEMENT

MODEL #5 H

760303

PRICE LIST

BALANCED OR CANTILEVER MOUNTS FOR MODELS 6V OR T6 BRILL OIL SKIMMERS

BRILL SKIMMERS

For further information, call or write: OIL SKIMMERS, INC.
1803 W. Royalton Road
Cleveland, Ohio 44147
Phone: (216) 237-4600

Order from BRILL OIL SKIMMERS, INC. c/o YOUR DEALER:

You must specify "Cantilever Mount", or "Balanced Mount", and the proper boom length.

BALANCED MOUNT

Consists of the following components, and is shipped complete:

One	M2U	Trunion
One	M3B	Spout
One	M5L	Left Pad
One	M6R	Right Pad
One	M7V	Rod
One	M8	Clean-out Plug
Two	M9	Collars
One	M10	Boom (Specify length--8ft., 12ft., 18ft., or 24ft.)
Nine	M11R	Counterweights
One	M12	Yoke
Four	M13	Chains, secured to M9 Collars
One	M16	Ring
Two	M17	Safety Caps
Two	M18	Safety Straps
One	SRS	Safety Release Spring
One		Installation Drawing

CANTILEVER MOUNT

Consists of the following components, and is shipped complete:

One	M215	Swivel
One	M3A	Spout
One	M5L	Left Pad
One	M6R	Right Pad
One	M7V	Rod
One	M8	Clean-out Plug
One	M9	Collar
One	M10	Boom, 6 or 8 ft.
One	M13	Chain
One		Swivel Boom Support
One		Installation Drawing

Spout and Rod Set	$ 158.00
Heater for M3A or M3B Spout 85W, 120 or 240V	65.00 extra

Select the proper boom length using the identification letter A, B, C, D, E, F.

A.	Balanced Mount, complete with eight (8) foot boom (distance from pivot point, center of mast, is 5'5")	$ 1,025.00
B.	Balanced Mount, complete with twelve (12) foot boom (distance from pivot point, center of mast, is 8')	1,097.00
C.	Balanced Mount, complete with eighteen (18) foot boom (distance from pivot point, center of mast, is 12')	1,205.00
D.	Balanced Mount, complete with twenty-four (24) foot boom (distance from pivot point, center of mast, is 16')	1,313.00
E.	Cantilever Mount, complete with six (6) foot boom with swivel boom support (distance from pivot point, center of mast is 5'2")	847.00
F.	Cantilever Mount, complete with eight(8) foot boom with swivel boom support (distance from pivot point, center of mast is 7'2")	883.00

All components are high strength aluminum alloy (M10 Boom is anodized and laquered), except fot the M11 Counterweights which are lead, and the M13 Chain, which is galvanized steel.

TERMS: 1%–Ten Days, Net 30 Days. (1½% monthly surcharge after 30 days. 18% Annual Rate).

FOB – Cleveland, Ohio USA

QUANITY DISCOUNT

1 to 5 inclusive	List, net
6 to 10 inclusive	List, less 5%
11 to 20 inclusive	List, less 10%
More than 20	Consult factory

1803 WEST ROYALTON ROAD
CLEVELAND, OHIO 44147
TELEPHONE: (216) 237-4600

OIL SKIMMERS, INC.

Effective November 1, 1978. Subject to change without notice.

TWX 810 427 9130

Printed in U. S. A.

CABLE CODE: Skimmers Cleveland

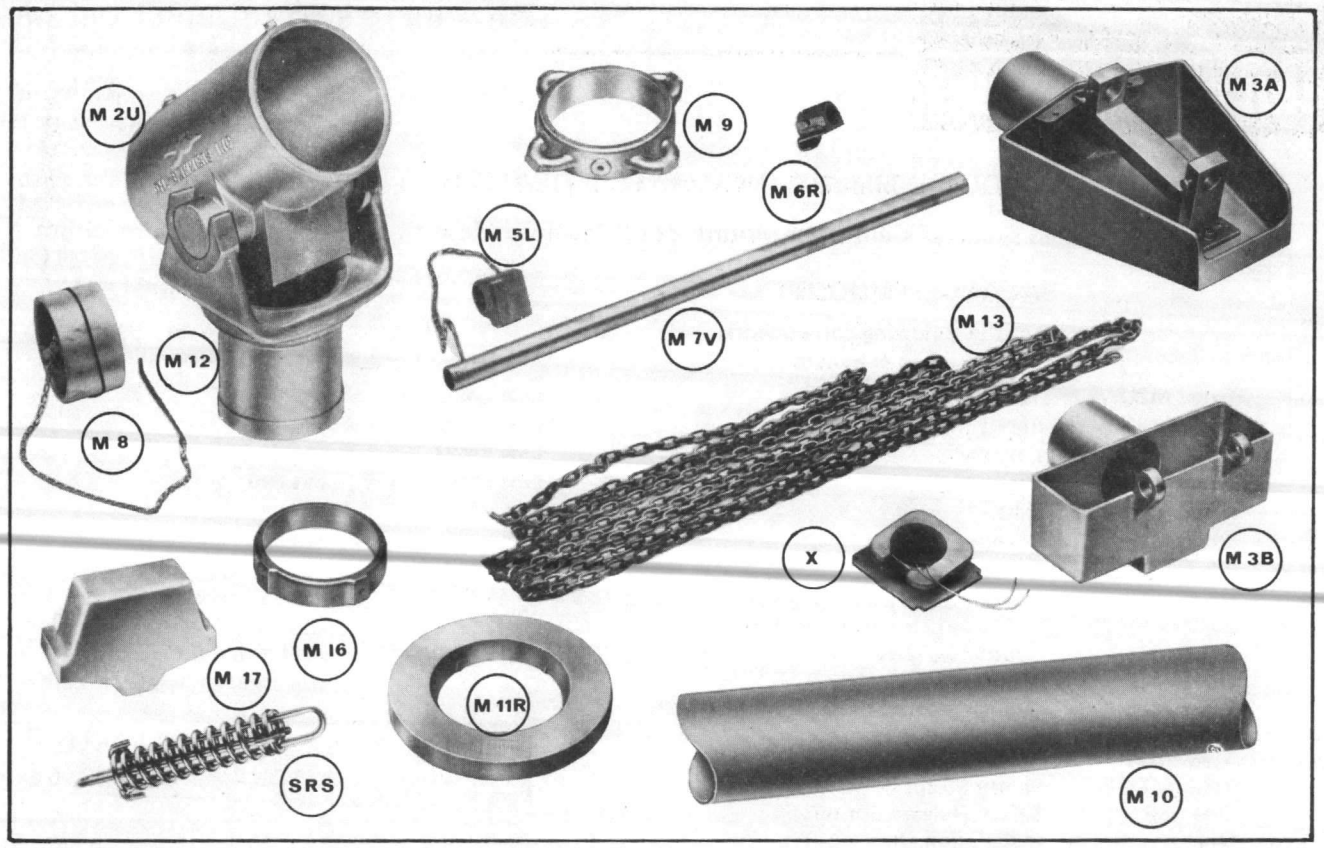

BALANCED MOUNT

M2U	Trunion	M8	Clean-out Plug	M11R	Counterweight
M3B	Spout	M9	Collar	M12	Yoke
M5L	Left Pad	M10	Boom	M13	Chain
M6R	Right Pad		8′–12′–18′–24′	M16	Ring
M7V	Rod	X	Heater	M17	Safety Cap

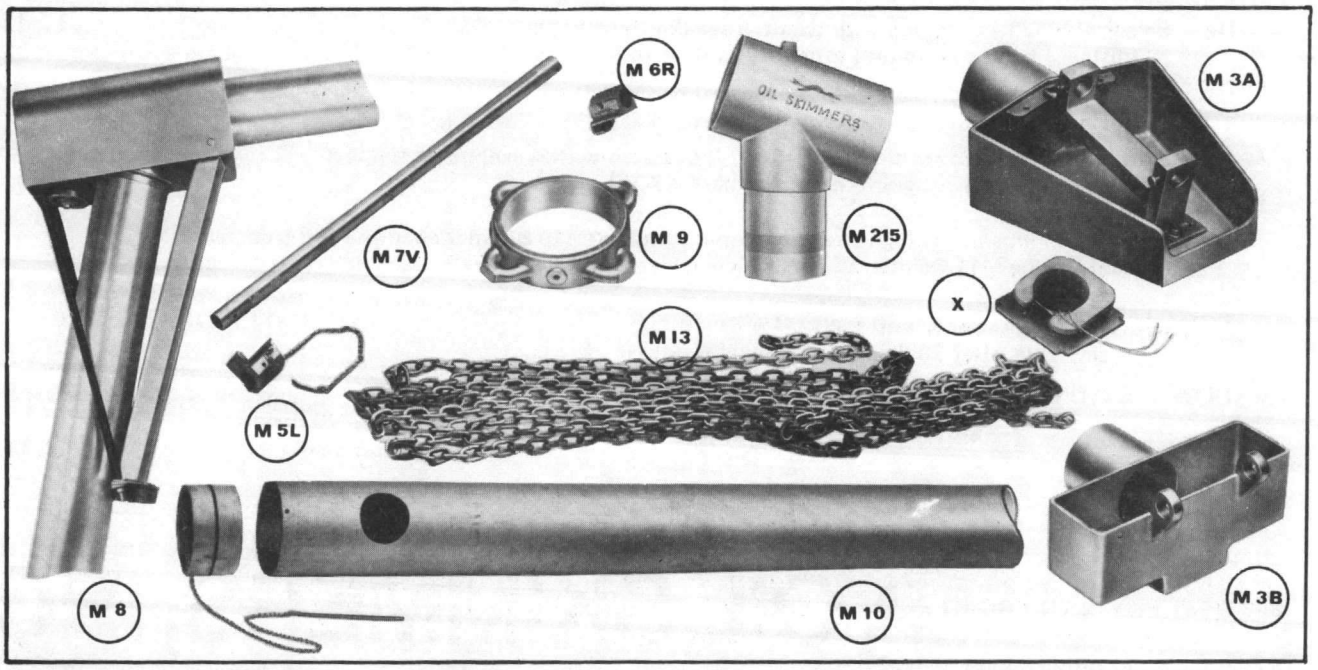

CANTILEVER MOUNT

M215	Swivel	M6R	Right Pad	M10	Boom, 6′ or 8′
M3A	Spout	M7V	Rod	M13	Chain
M5L	Left Pad	M8	Clean-out Plug		Swivel Boom Support
		M9	Collar		

ITEM	PART	QTY.	DWG. No.
1	SKIMMER MODEL GV	1	751210
2	SPOUT ASSEMBLY M3A	1	760604
3	ROD & LEG ASSEMBLY	1	760426
4	M10 BOOM - 6" O.D. - 1/4" WALL	1	760311
5	COLLECTOR TUBE #5 - 3/4" O.D. 1/2" I.D.	1	POIYURETHANE
6	M 215 SWIVEL	1	751202
7	MAST - 6" I.D. SCH'DL #40 PIPE - 1/4" WALL	1	FURNISHED BY CUSTOMER
8	SWIVEL BOOM SUPPORT	1	760608
9	CHAIN - 3/16 COIL PROOF #M13	1	
10	M8 CLEANOUT PLUG	1	760513
11	M9 COLLAR	1	750910
12	SEAL GROOVE TUBE - 6 1/2" LONG.	1	POLYETHALINE
13	CROSS MOUNTING SPOUT M3B	1	751124
14	M18 STRAP W/ BOLTS	1	760204

WARNING

BEFORE MOUNTING SKIMMER, PUT 8 QTS. S.A.E. 30 GEAR LUB INTO HOUSING. FILL TO OIL LEVEL LINE.

DRIVE WHEEL SIDE OF SKIMMER MUST FACE BAFFLE SO TUBE FLOATS WITH STREAM TO BAFFLE.

BOOM SIZE (ITEM 4) CAN BE EITHER 6 FT. OR 8 FT. LONG.

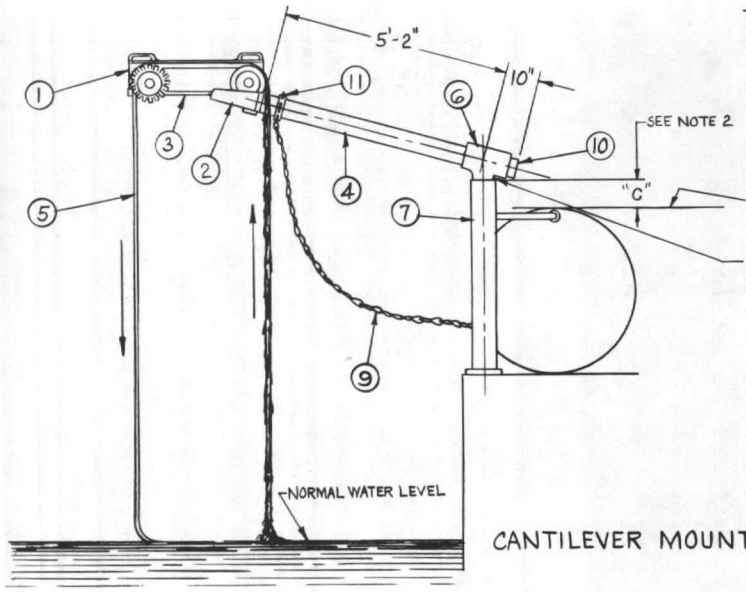

CANTILEVER MOUNT

NOTE #1
FOR M3A SPOUT ASSEMBLY
SEE DWG. #760604 & #760312

NOTE #2
MAKE THE MAST TOP HIGH ENOUGH SO THAT "A" IS AT LEAST 8 FT. AND "C" IS AT LEAST 6". TO BE DETERMINED BY CUSTOMER.

NOTE #3
LENGTH OF TUBE IS NO MORE THAN 16 FT. PLUS TWICE THE DISTANCE FROM SKIMMER TO TOP OF HIGHEST LEVEL OF POND.
SEE DWG. #760713

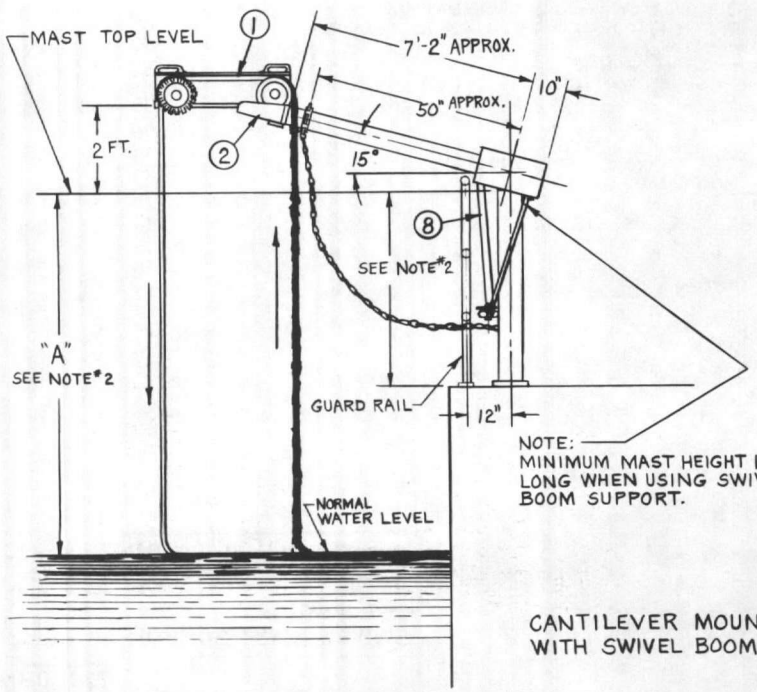

NOTE:
MINIMUM MAST HEIGHT IS 3 FT. LONG WHEN USING SWIVEL BOOM SUPPORT.

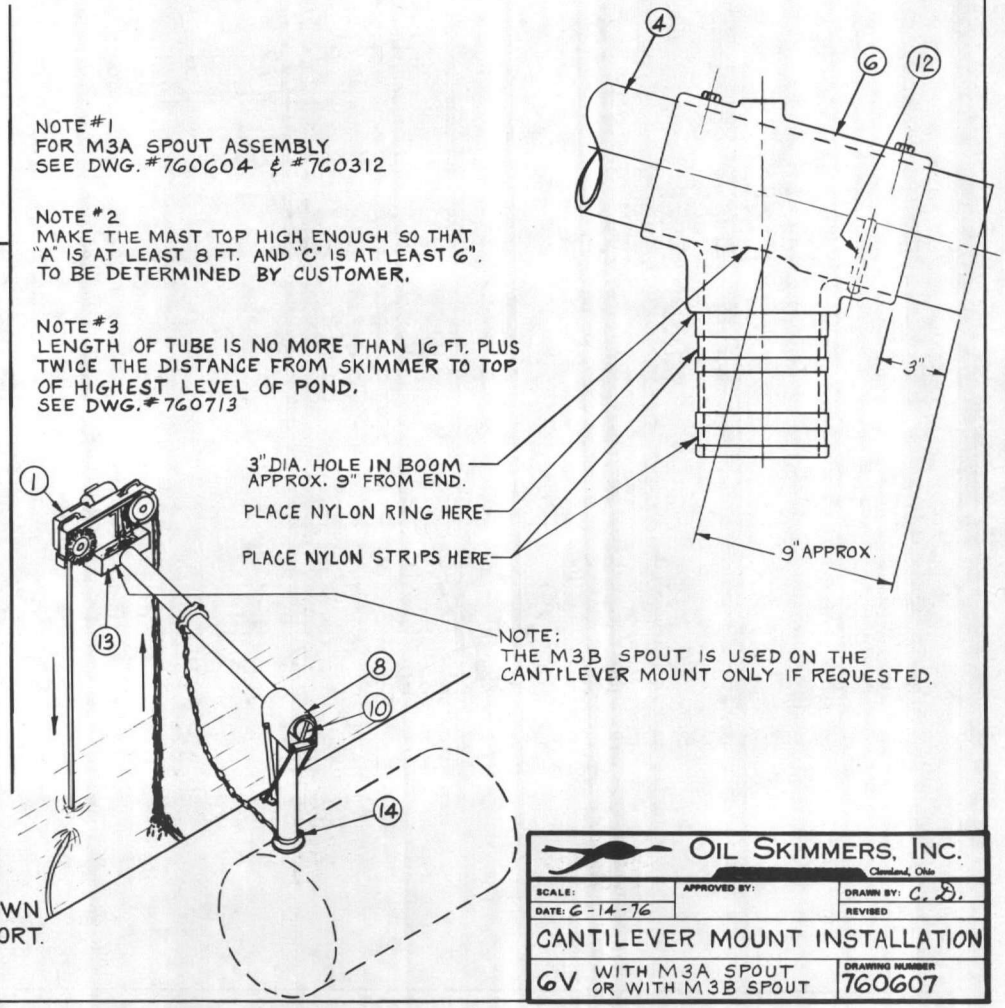

NOTE:
THE M3B SPOUT IS USED ON THE CANTILEVER MOUNT ONLY IF REQUESTED.

CANTILEVER MOUNT SHOWN WITH SWIVEL BOOM SUPPORT.

OIL SKIMMERS, INC.
Cleveland, Ohio

SCALE:	APPROVED BY:	DRAWN BY: C. D.
DATE: 6-14-76		REVISED

CANTILEVER MOUNT INSTALLATION

GV WITH M3A SPOUT OR WITH M3B SPOUT

DRAWING NUMBER 760607

ITEM	PART	QTY.	DWG. No.
1	CHANNEL BAR	1	760608
2	PLATE	1	
3	HOOD	1	
4	QUARTER ROUND BRACE	1	
5	ANGLE	1	
6	ROD W/2 NUTS - 7/16-14 NC - 32 1/2 LONG	2	
7	BEVEL WASHERS	8	
8	ROD WITH COTTER PIN & WASHER	1	
9	CASTER WHEELS 4" x 1 5/8 KR4B-HARD TIRE	2	FAULTLESS
10	BOLTS & NUTS 7/16 - 1 3/4 SHANK - 2 3/8" LONG	2	
11	WASHERS - FOR 7/16" BOLTS	8	

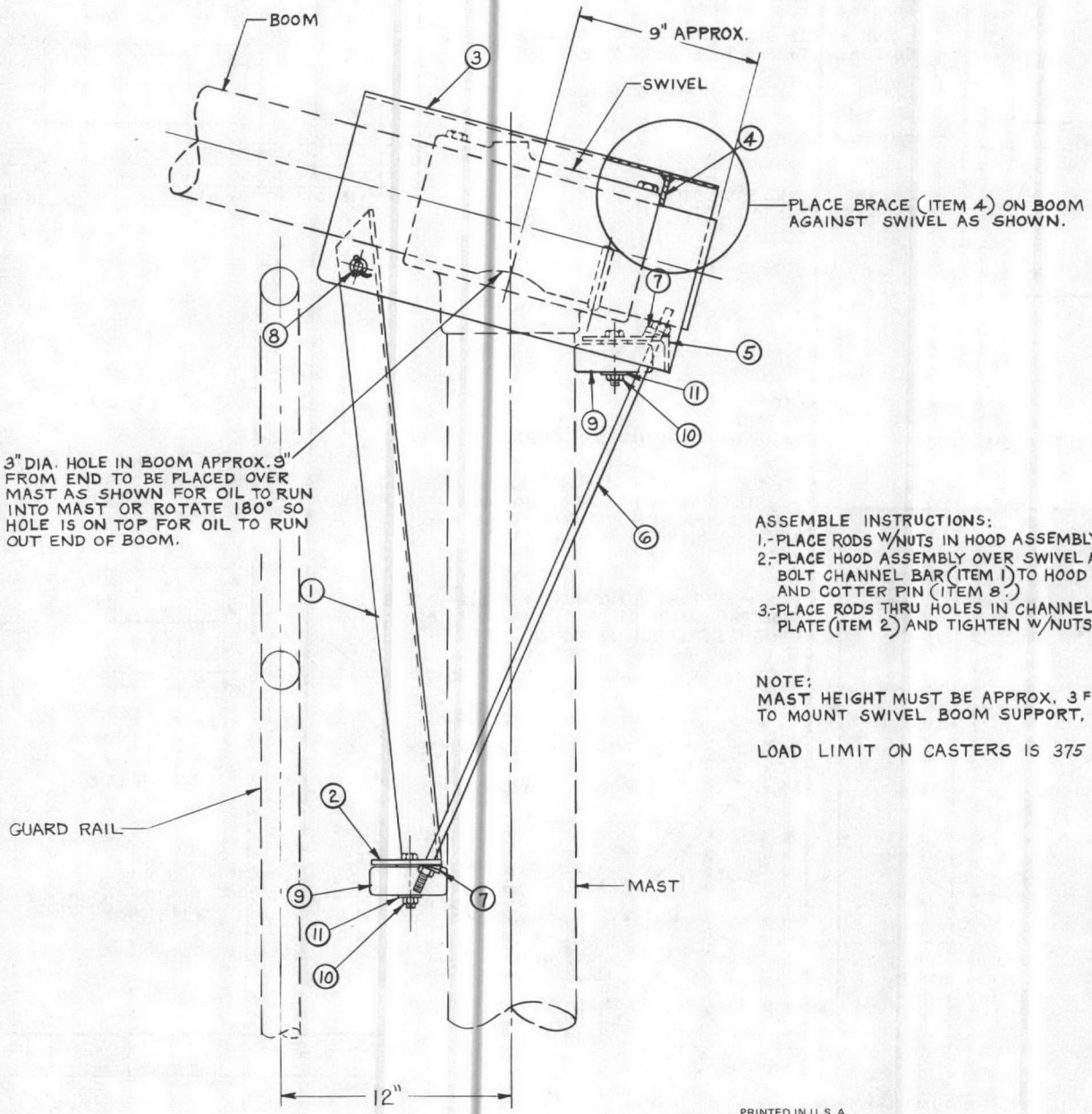

ASSEMBLE INSTRUCTIONS:

1.-PLACE RODS W/NUTS IN HOOD ASSEMBLY.

2.-PLACE HOOD ASSEMBLY OVER SWIVEL AS SHOWN ABOVE AND BOLT CHANNEL BAR (ITEM 1) TO HOOD WITH LONG ROD, WASHERS, AND COTTER PIN (ITEM 8.)

3.-PLACE RODS THRU HOLES IN CHANNEL BAR PLATE (ITEM 2) AND TIGHTEN W/NUTS.

NOTE:
MAST HEIGHT MUST BE APPROX. 3 FT. LONG TO MOUNT SWIVEL BOOM SUPPORT.

LOAD LIMIT ON CASTERS IS 375 LBS.

PRINTED IN U. S. A.

OIL SKIMMERS, INC.
Cleveland, Ohio

SCALE: QUARTER	APPROVED BY:	DRAWN BY: C. D.
DATE: 7-13-76		REVISED

SWIVEL BOOM SUPPORT ASSEMBLY

DRAWING NUMBER 760608-M

ANGLE FRAME MOUNTING SYSTEM

BRILL SKIMMERS

For further information, call or write: **OIL SKIMMERS, INC.**
1803 W. Royalton Road
Cleveland, Ohio 44147
Phone: (216) 237-4600

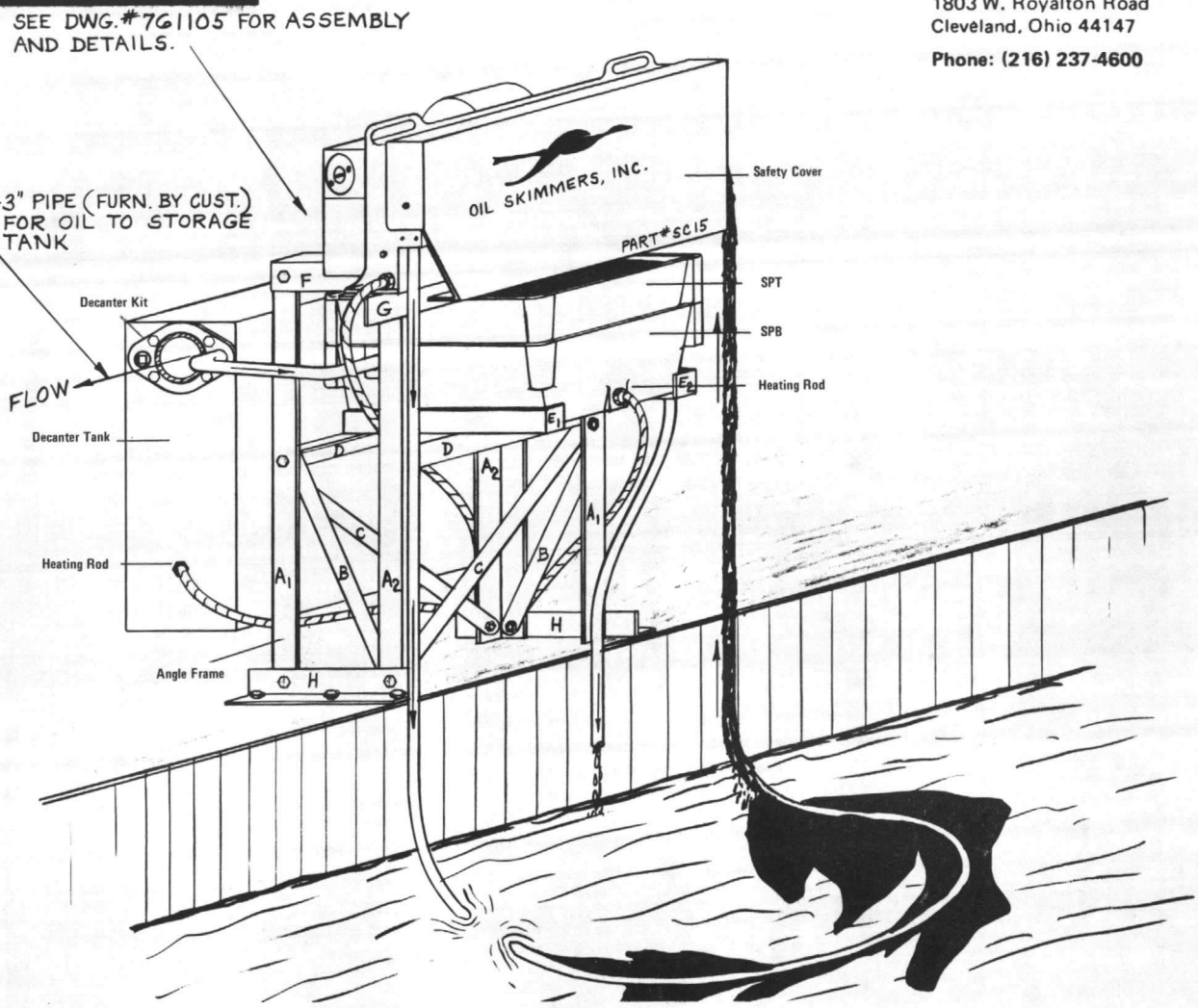

PART NO.	ITEM AND DESCRIPTION	PRICE
SPB	(6V) Bottom Sludge Pan	$ 140.00
SPT	(6V) Top Sludge Pan	140.00
SPB3	(6V) Single Sludge Pan with 3" NPT Hole in Bottom	150.00
SPS	(6V) Sludge Pan Set (top and bottom)	280.00
	Floor Mount Angle Frame Assembly Available in aluminum 30" or 50" hts.	200.00
	Vault Mount Angle Frame Assembly Aluminum, not shown	175.00
DT	Sludge Pan Swing Tray To Drum Not shown	25.00

PART NO.	ITEM AND DESCRIPTION	PRICE
SC15	Safety Cover	$ 75.00
	Decanter Tank (Stainless Steel), with Decanter Kit	440.00
	Decanter Kit (Cast Iron), Less Tank	160.00
	Heating Rods for Decanter Tank and Sludge Pan (85W, 120V) each	60.00

TERMS: 1%–Ten Days, Net 30 Days. (1½% monthly surcharge after 30 days. 18% Annual Rate).

FOB – Cleveland, Ohio USA

1803 WEST ROYALTON ROAD
CLEVELAND, OHIO 44147
TELEPHONE: (216) 237-4600

OIL SKIMMERS, INC.

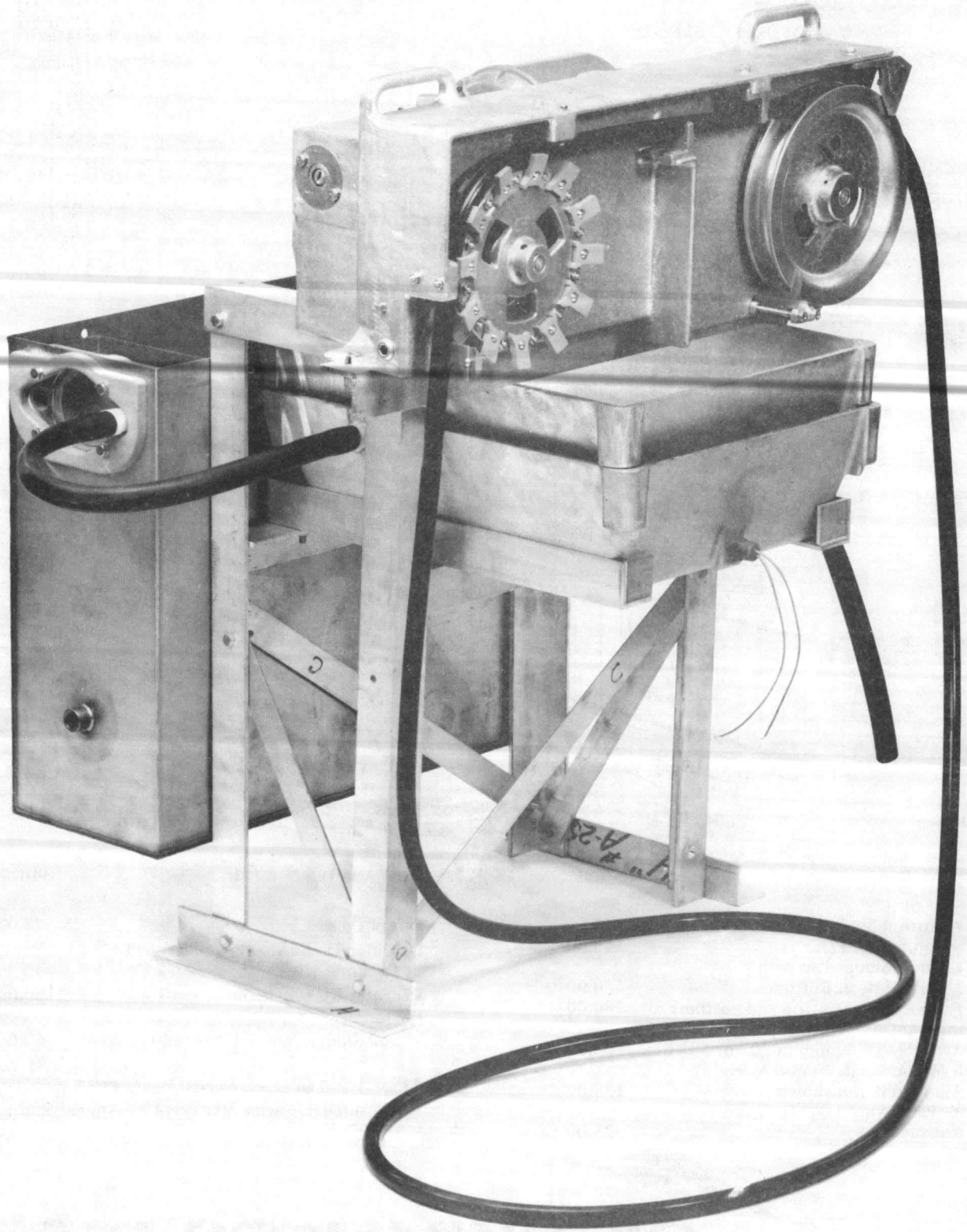

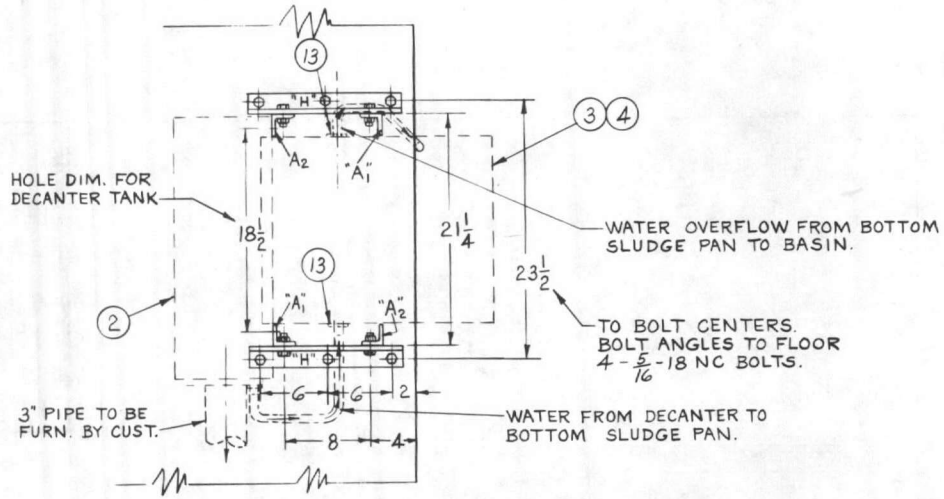

TOP VIEW - FLOOR MOUNT HOLE LAYOUT

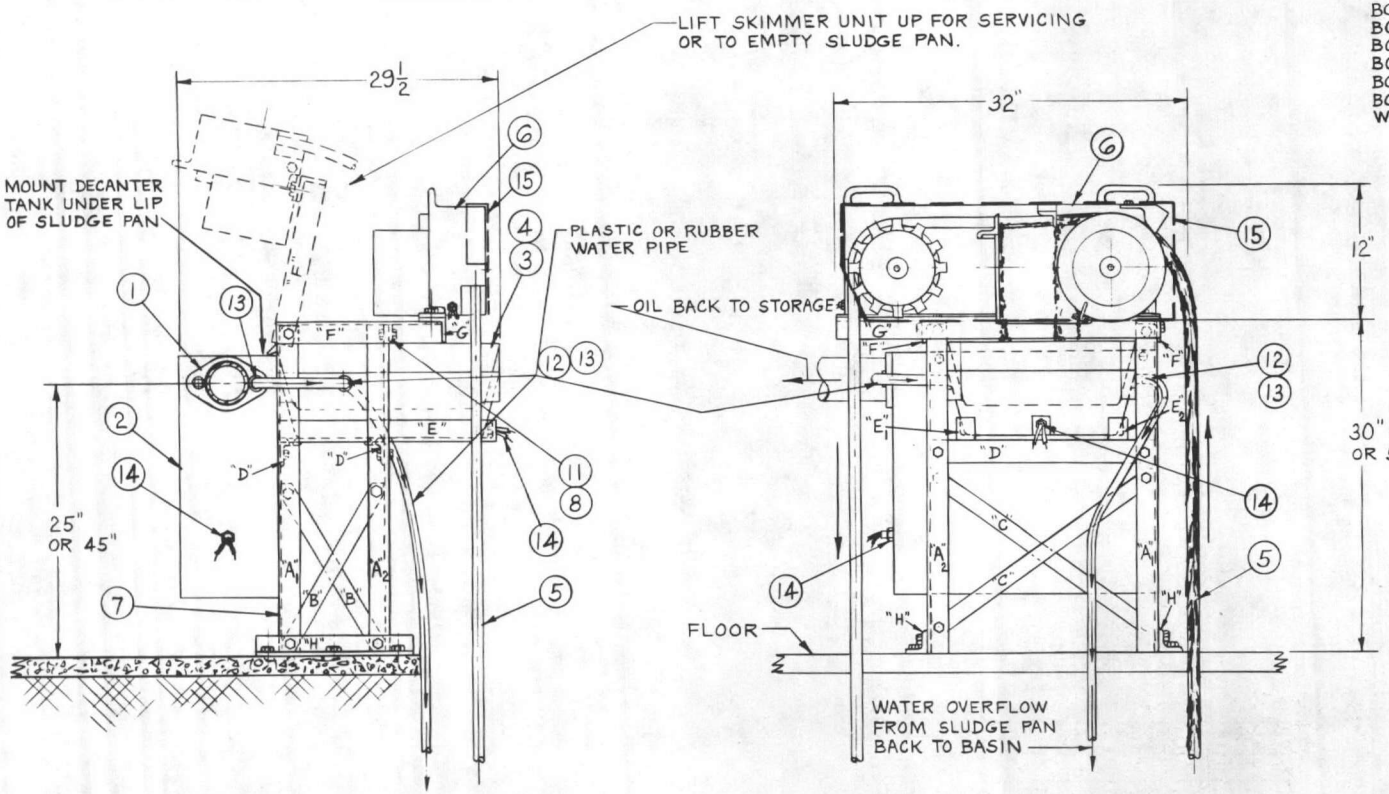

SIDE VIEW

FRONT VIEW

PRINTED IN U. S. A.

ITEM	PART	QTY.	DWG. No.
1	DECANTER KIT ASSEMBLY	1	760119
2	DECANTER TANK	1	760331
3	SLUDGE PANS - SET	1	761021
4	BAFFLE PLATE	1	761025
5	COLLECTOR TUBE	1	760713
6	SKIMMER UNIT #GV	1	751210
7	ANGLE'S A-B-C-D-E-F-G-H	17	761106
8	HEX. BOLT 1 1/4 LONG - 5/16 - 18 NC W/LOCKWASHER & NUT.	12	CAD. PLATED
9	HEX. BOLT 1 1/4 LONG - 5/16 - 18 NC W/ WASHER AND DOUBLE NUTS	2	CAD. PLATED
10	FLATHEAD BOLT 1 1/4 LONG - 5/16-18 NC WITH LOCKWASHER AND NUT.	13	CAD PLATED
11	RUBBER BUMP PAD + PLATE	2	761107
12	PLASTIC TUBE FOR 3/4 CONN. APPROX. 24" LONG	2	FURNISHED BY CUSTOMER
13	MALE CONNECTOR TUBE TO PIPE 3/4 N.P.T.	3	PLASTIC
14	HEATER 12" LONG - 1/2 N.P.T.	2	
15	SAFETY COVER #SC15 "OPTIONAL"	1	770725

NOTE #1
BOLT ANCHOR ANGLES "H" TO FLOOR.
BOLT ANGLE'S "A" TO FLOOR ANGLES "H" WITH ⑧
BOLT "B" TO "A" - ONE AT EACH SIDE WITH ⑧
BOLT "C" TO "A" - ONE AT EACH SIDE WITH ⑩
BOLT "D" TO "A" WITH ⑩
BOLT "E" TO "D" WITH ⑩
BOLT "F" TO "A" WITH ⑨ - NOT TIGHT.
BOLT ITEM ⑪ TO A_1 & A_2 WITH ⑧
BOLT "G" TO ANGLES "F" WITH ONE ⑩ & ONE ⑧
BOLT SKIMMER TO "G" WITH ⑧ USE REG. WASHER.
BOLT DECANTER TANK ASSEMBLY TO A_1 & A_2 WITH ⑧ UNDER LIP OF SLUDGE PAN AS SHOWN.

NOTE #2
IF THE OIL IS TO BE COLLECTED IN STORAGE DRUMS ON PALLETS, THE LEGS (ANGLES "A") MUST BE 50" LONG OR MORE.

NOTE #3
THE GV UNIT CAN BE MOUNTED WITH THE DRIVE WHEEL FACING INWARD (OPPOSITE AS SHOWN). BY JUST MOVING ANGLE "G" TO OPPOSITE HOLES.

NOTE #4
IF HEATED SLUDGE PAN IS NOT REQUIRED THEN ONLY THE TOP PAN CAN BE USED BY LOWERING THE DECANTER TANK 2 5/8 INCHES. USE A LONG WATER TUBE FROM THE DECANTER TO BASIN. - SEE DWG. 770910.

NOTE #5
FILL DECANTER TANK WITH WATER BEFORE STARTING SKIMMER.

OIL SKIMMERS, INC.
Cleveland, Ohio

SCALE: 1/8" = 1"	APPROVED BY:	DRAWN BY: C.B.
DATE: 11-5-76		REVISED
ANGLE FRAME MOUNT W/GV UNIT		
FOR DECANTING SET-UP		DRAWING NUMBER 761105

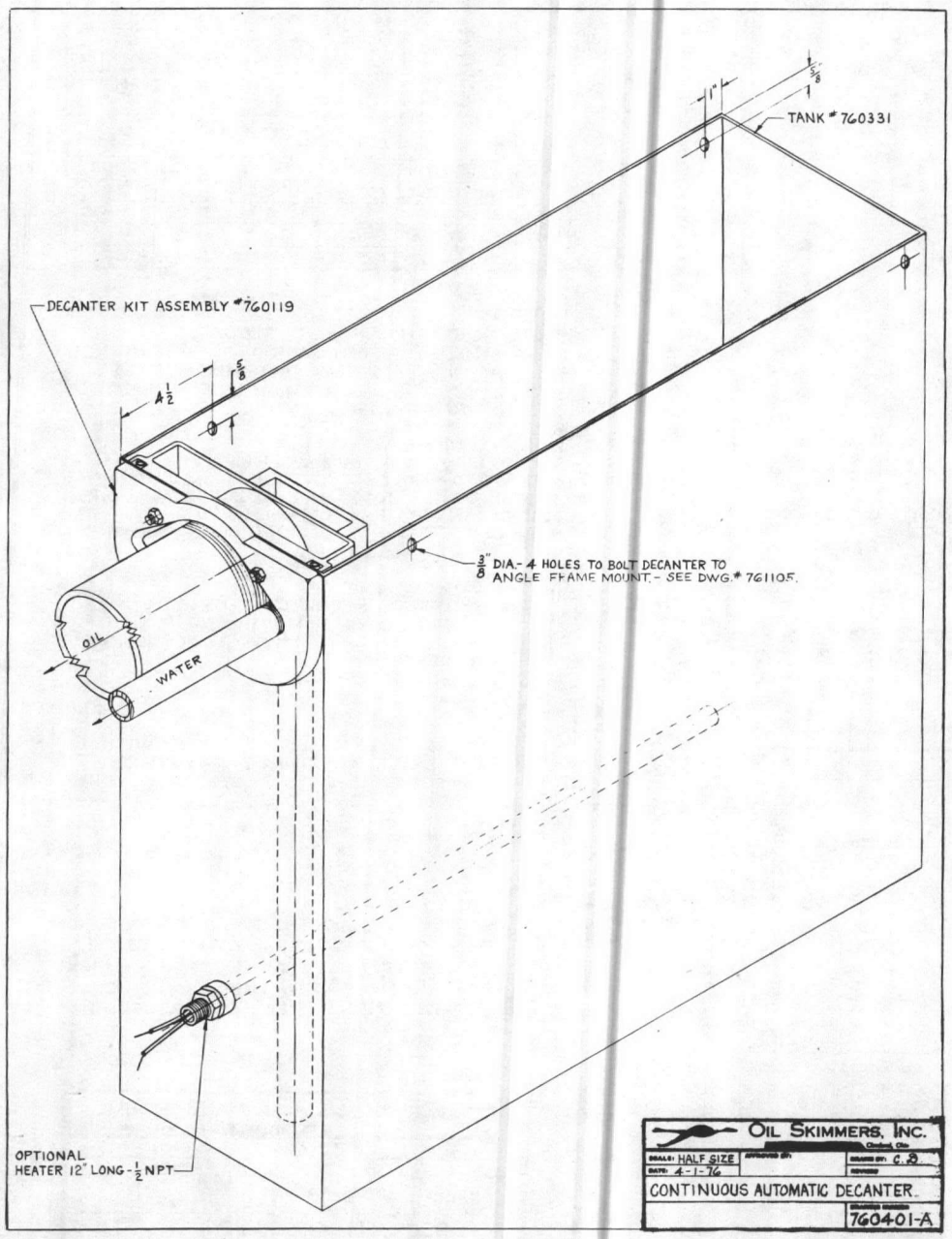
TANK # 760331
DECANTER KIT ASSEMBLY #760119
DIA.- 4 HOLES TO BOLT DECANTER TO ANGLE FRAME MOUNT.- SEE DWG.# 761105.
OIL
WATER
OPTIONAL HEATER 12" LONG-½ NPT
OIL SKIMMERS, INC.
SCALE: HALF SIZE
DATE: 4-1-76
CONTINUOUS AUTOMATIC DECANTER.
760401-A

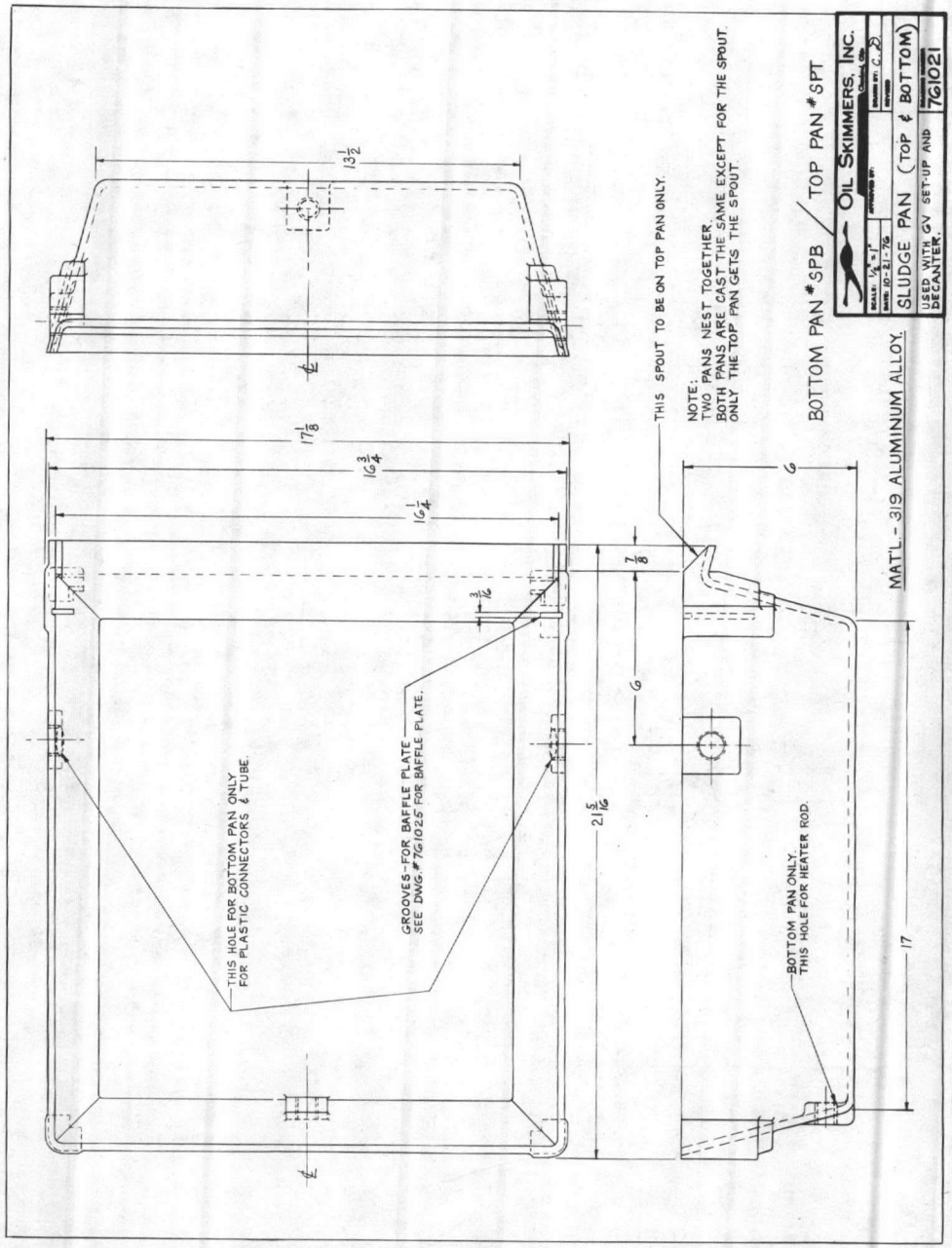
THIS SPOUT TO BE ON TOP PAN ONLY.
NOTE:
TWO PANS NEST TOGETHER.
BOTH PANS ARE CAST THE SAME EXCEPT FOR THE SPOUT.
ONLY THE TOP PAN GETS THE SPOUT.
BOTTOM PAN #SPB / TOP PAN #SPT
MAT'L - 319 ALUMINUM ALLOY.
THIS HOLE FOR BOTTOM PAN ONLY FOR PLASTIC CONNECTORS & TUBE.
GROOVES - FOR BAFFLE PLATE SEE DWG.#761025 FOR BAFFLE PLATE.
BOTTOM PAN ONLY. THIS HOLE FOR HEATER ROD.
OIL SKIMMERS, INC.
SCALE: ¼=1"
DATE: 10-21-76
SLUDGE PAN (TOP & BOTTOM)
USED WITH GV SET-UP AND DECANTER.
761021

NEW AUTOMATIC BRILL OIL SKIMMING SYSTEM WITH BUILT IN ELECTRIC HEATING

OIL SKIMMERS, INC.

Model 6-V

Outside Mount — Closed Tank Skimmer Unit Pan Assembly

1. Skimmer 2. Motor
3. Collector Tube
4. Closed Tank
5. Water 6. Oil
7. Inlet 8. Drain

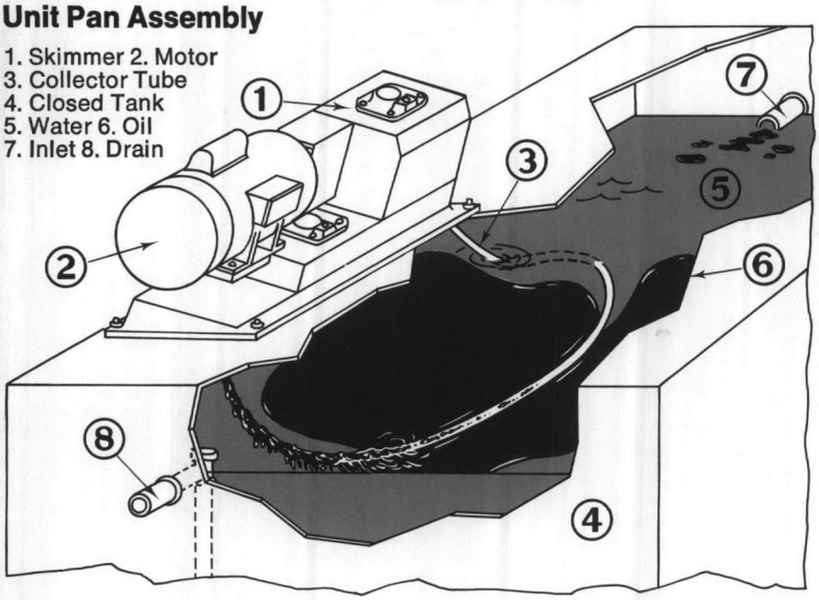

Outside Mount — Open Tank With Decanter Pan Assembly and Skimmer Unit

1. Skimmer 2. Motor 3. Collector Tube
4. Open Tank 5. Inlet 6. Drain 7. Decanter
8. Water Back To Tank
9. Oil To Storage

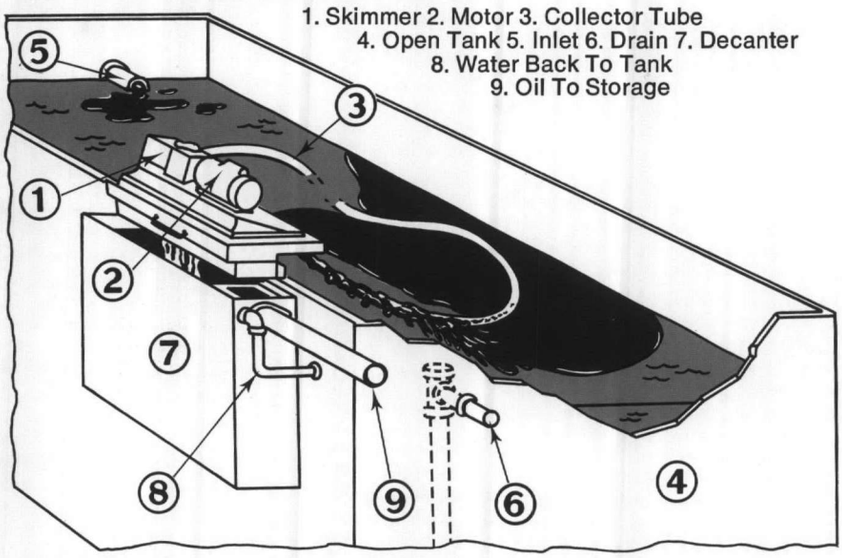

Inside Mount — Closed Tank With Decanter Pan Assembly and Skimmer Unit

1. Skimmer 2. Motor 3. Collector Tube
4. Closed Tank 5. Inlet 6. Drain
7. Decanter 8. Water Back To Tank
9. Oil To Storage

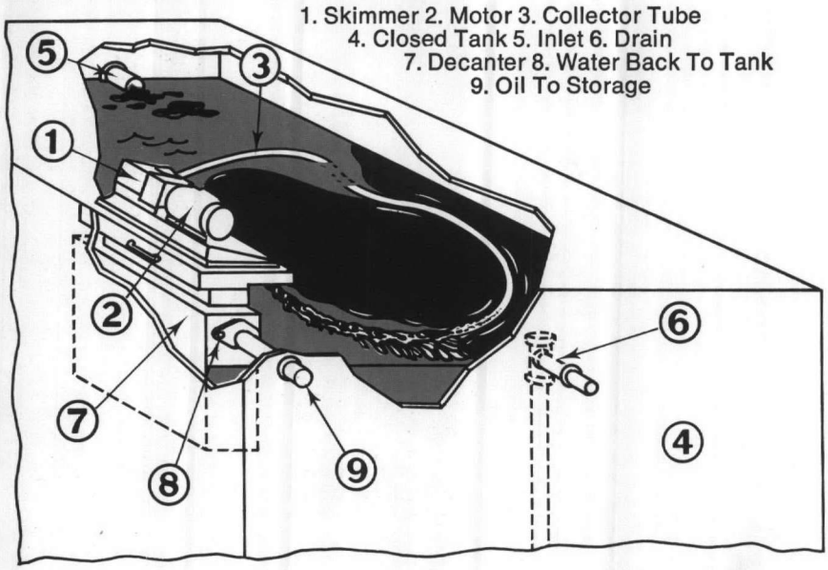

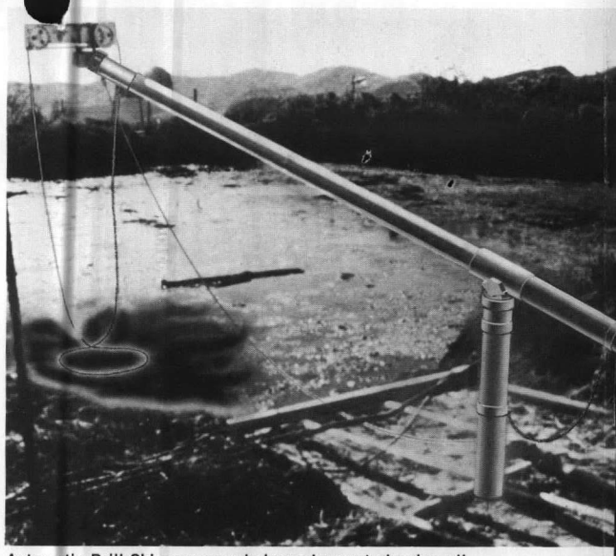

Automatic Brill Skimmer on a balanced mount clearing oil from the surface of a large settling pond.

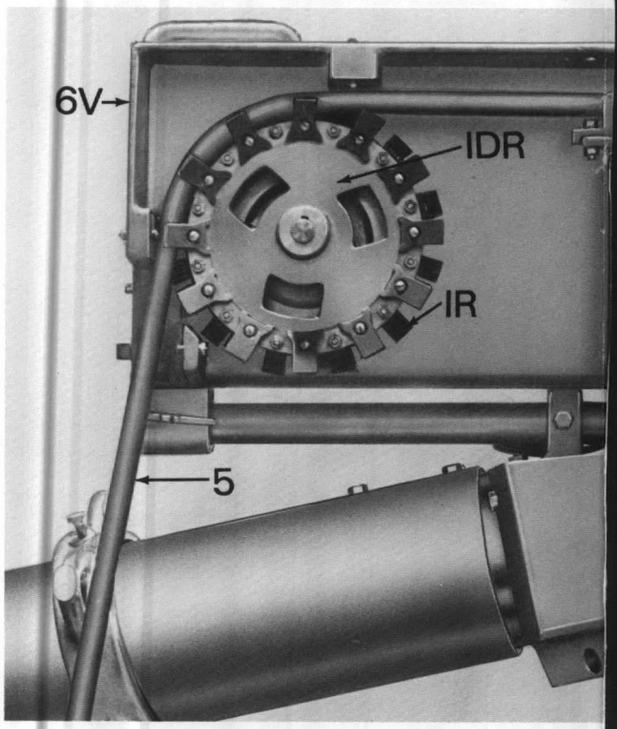

Oil Skimmers, Inc., has incorporated features to minimize the maintenance caused by abrasive dirt found in most waste oil. The Collector tube (5) is a continuous loop tubing selected for its ability to withstand most oil and grease and high abrasion, over a wide temperature range. Parts that rub against the collector tube; tube scrapers (4URA), pressure block and tube guide (6V2) are all identical. These parts and the drive wheel fingers (1R) are quickly replaceable. All of these parts are made from a jet-age ceramic which is nearly as hard as diamond and withstands abrasion indefinitely.

The drive wheel (IDR) that drags the tube through the scrapers has fingers that grip the tube and keep it moving even on applications of grease and tar like oils.

The power driven pulley wheel (1T) (a Brill Skimmer Exclusive) guides the tube horizontally through the scrapers. This permits the oil to fall free into the collection spout. The power driven pulley is kept continuously cleared of excess oil and grease build up by the pulley rim scraper (2UV).

The Brill Skimmer Model 6-V and M3A and M3B spouts have provisions for electric heating

OIL SKIMMERS, INC.

Oil Skimmers, Inc., manufactures oil skimmers that remove floating oil from the surface of water and elevate it so that it flows by gravity into storage tanks. Floating oil from leaks and spills is continuously removed before it can accumulate and escape into public waterways or interfere with plant processes. These simple, rugged machines operate continuously without human supervision. They are used on confined bodies of water such as settling ponds, sumps, coolant reservoirs, steel mill scale pits, ditches and process tanks.
Oil Skimmers, Inc., also supplies mounting systems for the skimming machines in order to minimize the cost of installation and maintenance. In addition, Oil Skimmers, Inc., supplies various automatic decanters to remove small amounts of water, dirt or process fluids from the skimmed oil.

Oil Skimmers, Inc., began building oil skimmers in 1967, and has developed them to their present state of rugged reliability as a result of years of actual field experience. There are over a thousand of these skimmers operating in major corporations.

Oil Skimmers, Inc., has trained representatives in every major industrial area in the United States and Canada as well as many nations overseas. The company carries an extensive inventory of complete machines mounting systems, and wear parts in its Cleveland, Ohio, warehouse for off-the-shelf delivery.

Oil Skimmers, Inc., representatives are backed by experienced people at its Cleveland headquarters. The company provides complimentary information including drawings, photographs and technical bulletins covering good design practices for overall waste water systems where oil removal is a problem. In addition, Oil Skimmers, Inc., can provide assistance in planning total oil removal systems based on years of experience in the field.

Concept

A closed loop of a specially formulated, flexible, hollow tube floats on the water surface. Oil adheres to its surface but water is repelled. The skimmer continuously draws the oil-covered tube through scrapers and returns the clean tube to the water surface to gather more oil. The skimmed oil flows by gravity through the mounting system or a trough to the storage tank. The flexible, floating collector tube is able to snake over and around floating debris to reach the floating oil. It floats up and down with varying liquid levels. The flexible tube flops so that it breaks up crusted oil or grease enabling it to adhere to the tube. Six to 14 feet of tubing floats in the skimming area.

Features

Pump clogging and wear due to grit and debris in skimmed waste oil is normally the highest maintenance cost in an oil skimming system. Oil Skimmers, Inc., skimmer-mount systems eliminates the need for pumping. Every part of Oil Skimmers, Inc., skimmer-mount systems is designed to keep service requirements simple, safe and infrequent. The collector tube is specially formulated to resist most pollutants over a wide temperature range. The parts that contact the grit-laden oil on the collector tube are special high-abrasion resistant ceramic. Gears, bearings and oil reservoirs are oversize. The skimmer-mount systems are aluminum to reduce weight and corrosion. The mounting system lets the skimmer swing to a safe, convenient service position. Electric de-icing equipment is available for extreme weather.

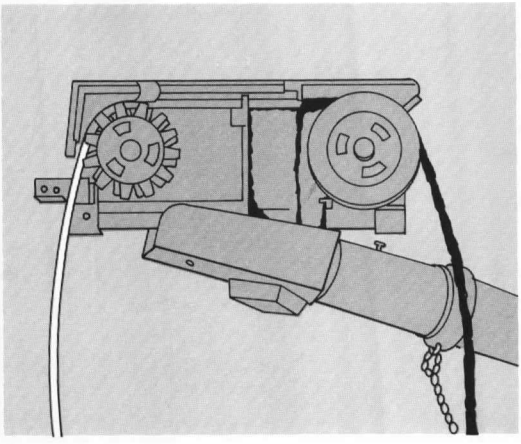

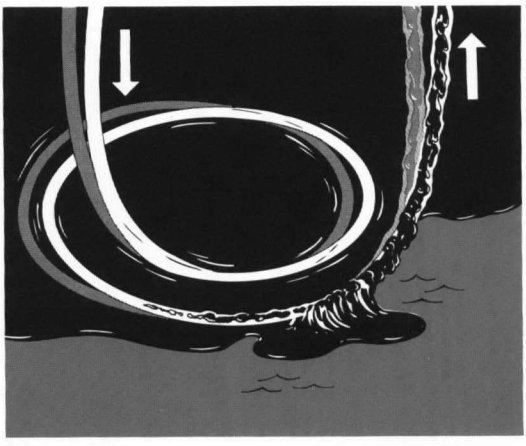

Model 5-H

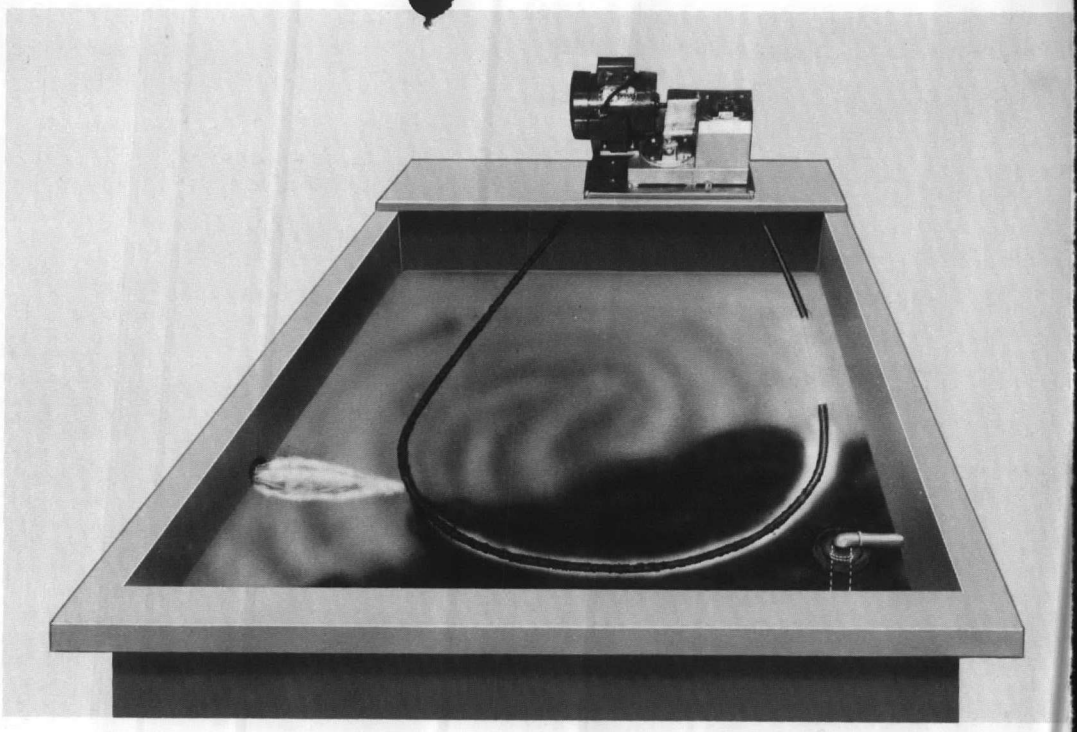

The Oil Skimmer Model 5-H is designed primarily to remove contaminates from solutions in above-floor tanks and vats, where the skimmer is mounted less than two feet above the liquid surface. Because of its compact design, it is particularly suited for use in limited space situations and congested plant areas. The Model 5-H can be installed for either open or closed tank usage with outside mountings. Typical applications of the Oil Skimmer Model 5-H include above-floor, open and closed tanks used in small waste treatment systems, parts washers, coolant systems and cold mill coolant systems. The unit is suited to skim floating mineral, vegetable or animal oil, oily froth, invert emulsions and other contaminates from waste water, coolants and certain cleaning solutions. Decanters are added where solution carry-over would be a problem due to frothy, invert emulsions or very small amounts of free oil present. The decanter returns the solution to the process tank and sends just the oil to oil storage. The operating capacity of the Oil Skimmer Model 5-H ranges from three to five gallons per hour for diesel oil or #2 fuel oil; nine to 18 gallons per hour for hydraulic oil; and 45 to 75 gallons per hour for gear lubricants and heavy fuel oils. These are only mentioned as typical examples. The capacity of the unit increases with the viscosity of the contaminate being skimmed. The Model 5-H can be utilized in skimming operations with liquid temperatures to 100°C.

Outside Mount — Open Tank Skimmer Unit Pan Assembly

1. Skimmer 2. Motor
3. Collector Tube 4. Open Tank
5. Water 6. Oil
7. Inlet 8. Drain

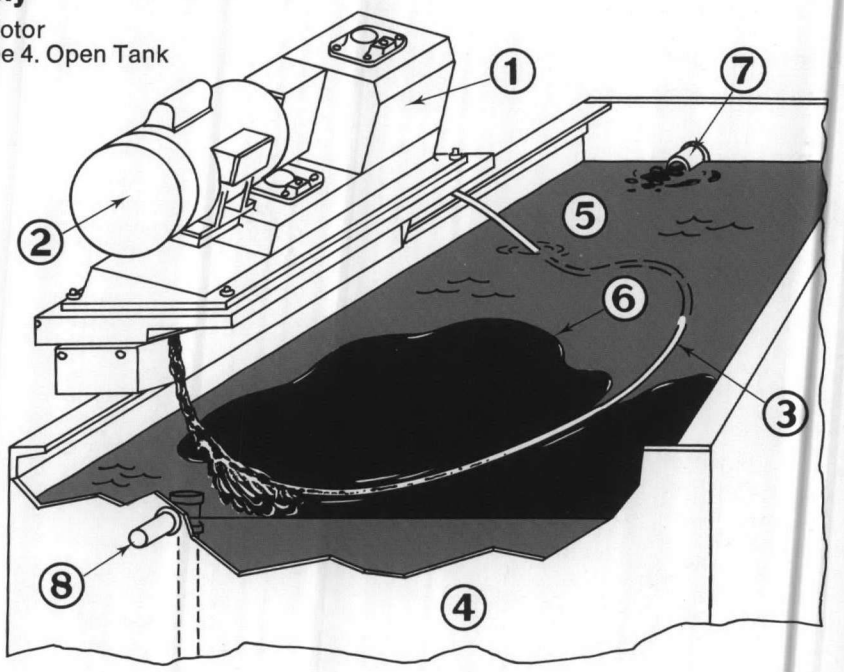

TAB PLACEMENT HERE

DESCRIPTION:

Oil Skimmers, Inc.

☐ Tab page did not contain hand written information

☑ Tab page contained hand written information
*Scanned as next image

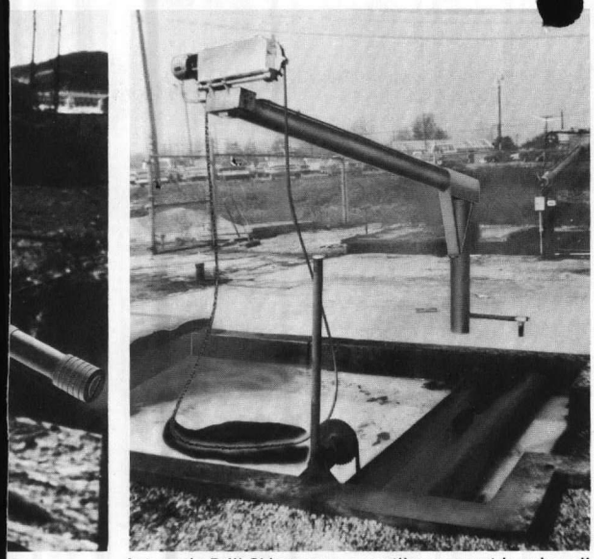

Automatic Brill Skimmer on a cantilever mount keeping oil from accumulating in a waste water sump.

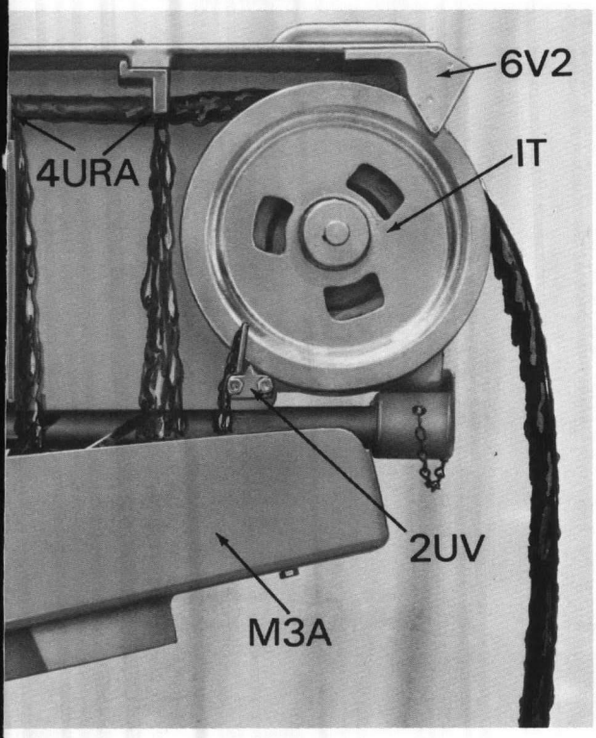

Complete Balanced Mount with baffle and dam above ground storage

1. Skimmer 2. Collector Tube 3. Boom (8, 12, 18 and 24 Foot Lengths) 4. Counterweight 5. Safety Chain 6. Mast 7. Above Ground Storage Tank 8. Anchor Chain 9. Dam 10. Baffle 11. Position For Servicing

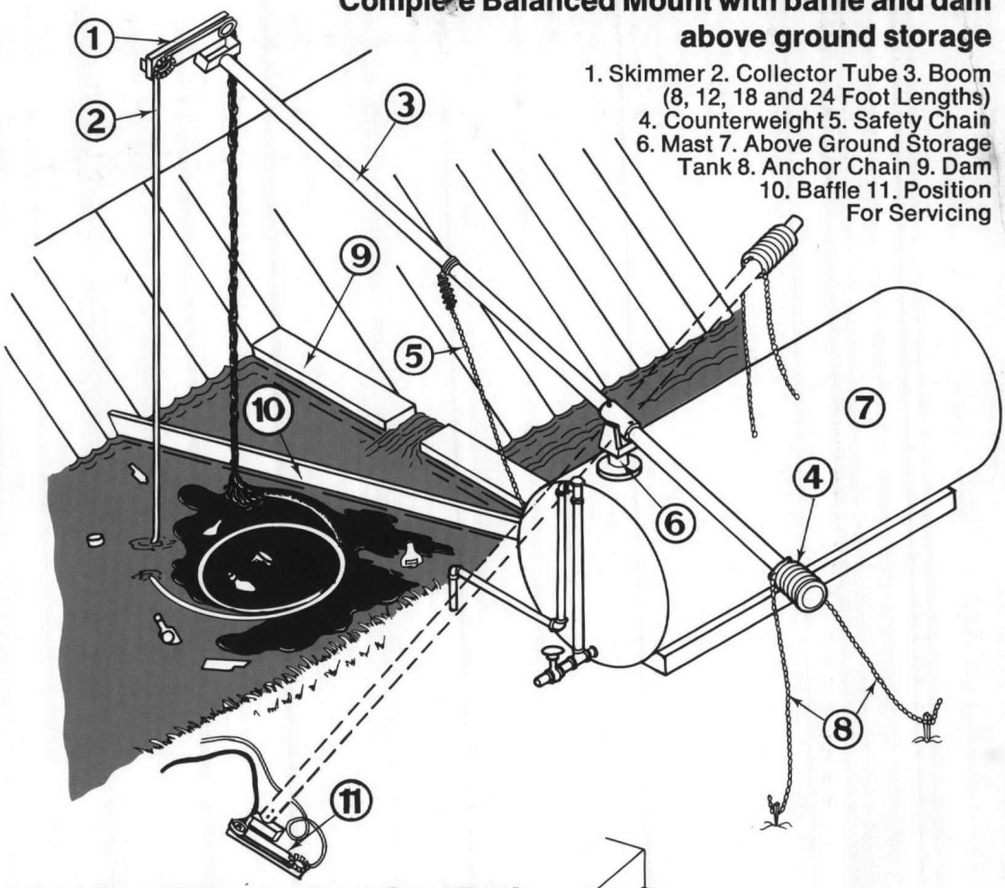

Cantilever Mount — Contained Basin below ground storage

1. Skimmer 2. Collector Tube
3. Boom (6 and 8 Foot Lengths)
4. Chain 5. Mast
6. Swivel Support 7. Basin Wall
8. Underground Storage
9. Position For Servicing

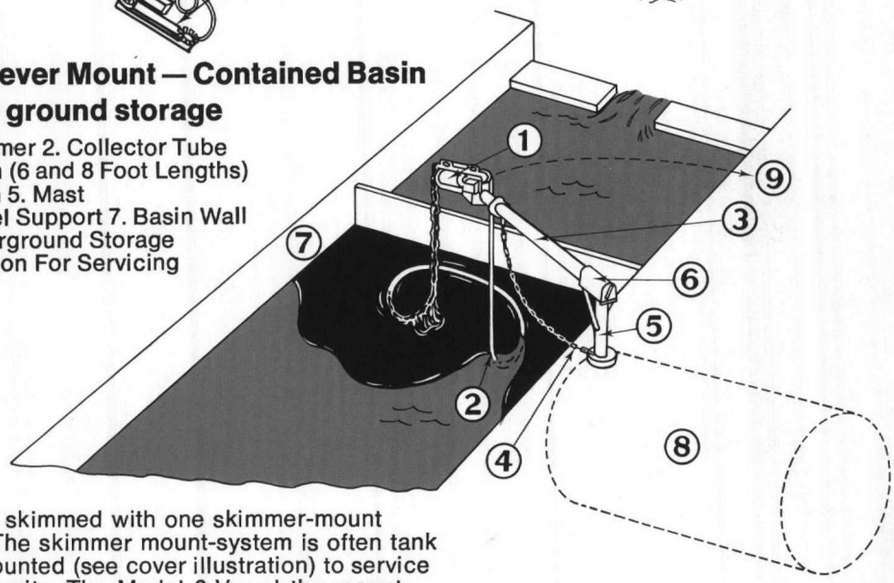

elements to keep it "ice-free" and free flowing in winter.

Oil Skimmers, Inc. provides prefabricated mounting systems that fit on a six inch (6″) pipe, to keep total installation costs as low as possible. They permit the skimmer to operate from 3½ feet to 16 feet from shore, and to swing over land for safe easy servicing. The skimmer can be quickly detached from the mount for use in other locations.

The Oil Skimmer 6-V with either the balanced or cantilever mount is widely used on settling ponds, drainage ditches, steel mill scale pits, below-floor sumps and central coolant systems. It skims the oil from the surface and lifts it up to 60 feet with no loss of capacity. This avoids the high maintenance costs of pumping due to clogged and worn pumps. This skimmer is capable of working in the heavy debris, gritty and crusted oil conditions actually encountered on most waste oil projects. Six to 14 feet of collector tube floating on the surface covers a wide area. The mounting system positions the skimmer over the floating oil while skimming and over the shore safely out of the way otherwise. Several pits often are skimmed with one skimmer-mount system. The skimmer mount-system is often tank trailer mounted (see cover illustration) to service scattered pits. The Model 6-V and the mount will accommodate electrical de-icing equipment for extreme cold weather service. Capacity increases with viscosity. Typical capacities are: diesel fuel or #2 fuel oil, 10 to 12 gallons per hour; hydraulic oil, 15 to 30 gallons per hour; and gear lubricant or heavy fuel oil, 80 to 120 gallons per hour. Skimmers operate on mineral, vegetable or animal oils, oily froth, invert emulsions or grease, in temperatures ranging from 0 to 100° C. It operates 24 hours per day, year round with no need for timers or supervision.

OIL SKIMMERS, INC.

OIL SKIMMERS, INC.

Model 5-H (Horizontal)

Tank Mounting Arrangement
DWG. #760303

Item	Part	Qty.	DWG No.
A	Motor — 1725 RPM NEMA 56	1	760112
B	Pan Assembly	1	760128
C	#5 Collector Tube	1	

	Dimensions	
	Inches	MM
a	$19\frac{3}{8}$	492mm
b	12	305mm
c	$12\frac{7}{8}$	327mm
d	13	330mm
e	17	432mm
f	11	279mm
g	19	483mm
h	20	508mm
j	5	127mm
k	$17\frac{7}{8}$	454mm
l	7	178mm

Shipping weights:

Model 5H complete with motor	90
Metal Pans	18

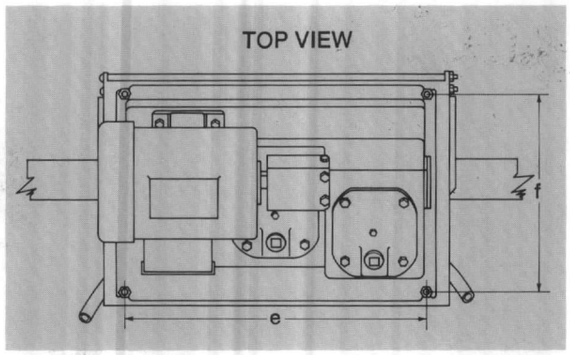

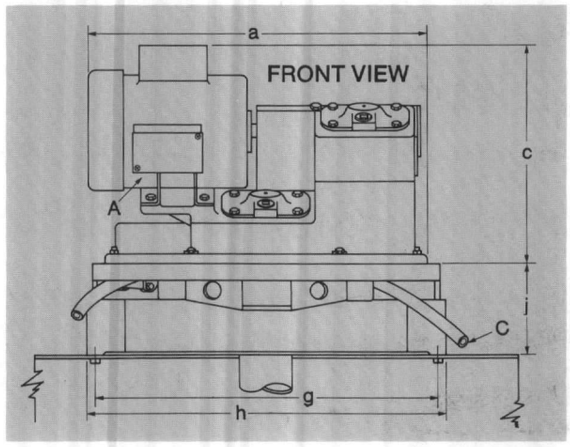

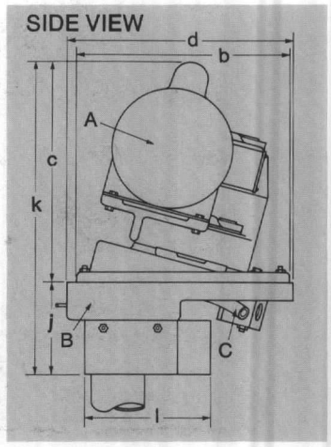

Model 6-V (Vertical)

Main Housing Assembly
DWG. #751210

Item	Part	Qty.	DWG No.
A	Main Housing	1	751130
B	Motor — ½ h.p. — 1725 RPM NEMA 56 Foot Mounted	1	
C	1DR — Drive Wheel Assembly	1	740923
D	Pulley Wheel #1T	1	750322
E	Pulley Wheel Scraper #2UV	1	750521
F	Scraper Holder — #6	1	751217
G	Scraper Holder — #4UR	2	751212
H	Scraper — #4R	7	750312
J	#5 Collector Tube	1	760713
K	Heater	1	Optional
L	Plug — Oil Level	1	
M	Plug — Drain — ½ N.P.T.	1	

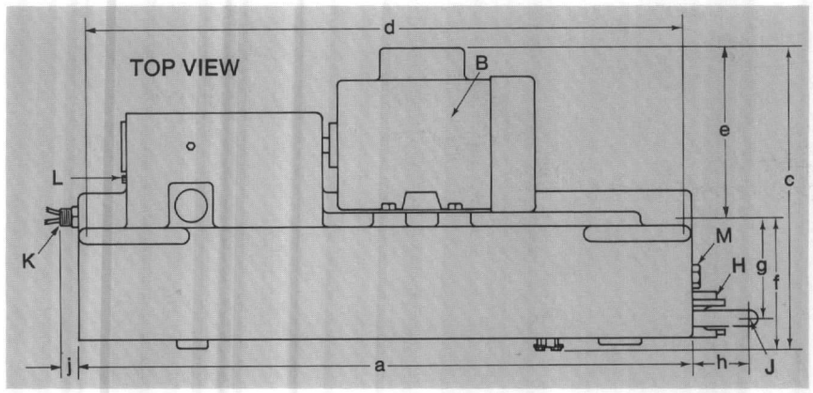

	Dimensions	
	Inches	MM
a	$28\frac{3}{16}$	716mm
b	$12\frac{3}{8}$	314mm
c	$14\frac{3}{8}$	365mm
d	$27\frac{7}{16}$	697mm
e	$8\frac{3}{4}$	222mm
f	$5\frac{5}{8}$	143mm
g	$4\frac{1}{8}$	105mm
h	$3\frac{1}{4}$	83mm
j	$\frac{3}{4}$	19mm

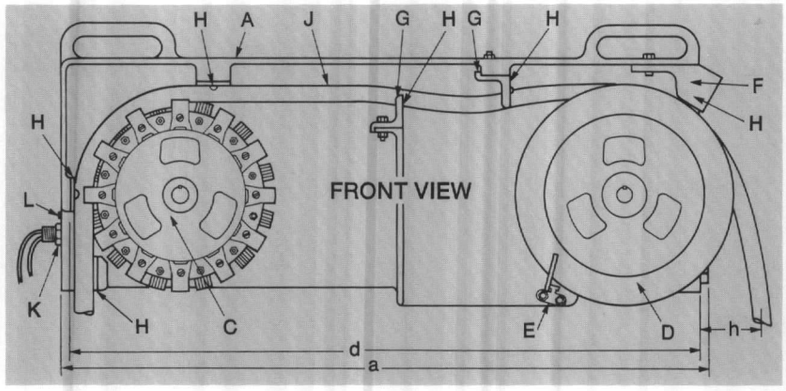

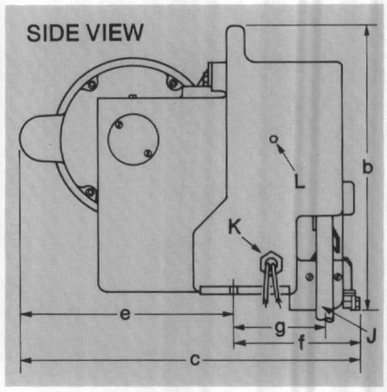

Shipping weights:

Model 6V with motor and tube	125
Cantilever Mount with swivel, spout, chain and collar	60
6 ft. Aluminum Boom	40
Balanced Mount with spout, collars, chain, yoke and trunnion	100
8 ft. Aluminum Boom	50
12 ft. Aluminum Boom	75
18 ft. Aluminum Boom	100
24 ft. Aluminum Boom	150
Counterweights (total 10)	340

Printed in U.S.A.

OIL SKIMMERS, INC.

TWX 810 427 9130 CABLE CODE: SKIMMERS CLEVELAND 1803 West Royalton Road • Cleveland, Ohio • 44147 • Tel. (216) 237-4600

UNITED STATES MARINE CORPS
Marine Corps Air Station
(Helicopter)
New River, Jacksonville
North Carolina 28545

204:HBM:cbm
10340
19 Apr 1979

From: Commanding Officer
To: Commanding General, Marine Corps Base, Camp Lejeune, N. C. 28542
(AC/S Facilities)

Subj: Oil Skimming System

Encl: (1) Oil Skimmers, Inc., ltr of 9 April 1979 w/encl

1. Enclosure (1) discusses and provides information on oil skimming devices provided by Oil Skimmers, Inc.

2. The use of an oil skimmer, as recommended in enclosure (1), will resolve and may eliminate fuel from entering waterways.

3. Enclosure (1) is provided as information which may assist in the procurement of the oil skimmer.

P. F. ANGLE
By direction

Copy to:
Base Maint, MCB, CLNC (w/o encl)