THIS IS A CONTRACTOR QUALITY CONTROL PROJECT

670

N62470- 70-B-0939

NOTICE:
Bids to be opened at 2:00 p.m., e.d.s.t.
18 August 1970

at the Atlantic Division,
Naval Facilities Engineering Command
Naval Station, Norfolk, Virginia 23511

NAVFAC
SPECIFICATION
NO. 05-70-0939

WATER TREATMENT PLANT, WELLS, AND DISTRIBUTION SYSTEM

at the

MARINE CORPS BASE, CAMP LEJEUNE, NORTH CAROLINA

Appropriation: 17 x 1205 MCON

A priority rating will apply to this contract upon award. The Contractor shall follow the provisions of DMS Reg. 1 and all other applicable regulations and orders of Business and Defense Services Administration in obtaining controlled materials and other products and materials needed to perform this contract.

All questions concerning the bidding or any other phase of the plans and specifications occurring prior to bid opening shall be presented to the Design, Division, Atlantic Division, Naval Facilities Engineering Commany, Building N-26, Room 344, Naval Station, Norfolk, Virginia 23511, telephone 444-7631, area code 703. Questions requiring interpretation of drawings and specifications must be submitted at least 7 days before bid opening. Interpretations or modifications to specifications made as a result of questions will be made by addendum only,and unless so done, all bidders should base their bids on the plans and specifications as issued.

To inspect the site of the work before bid opening, prior appointment must be made with the Assistant Resident Officer in Charge of Construction, Marine Corps Base, Camp Lejeune, North Carolina

Telephone 346-2111, Extension 5625, Area Code 919.

Bureau of Yards and Docks/NAVFAC "Y" specifications referenced herein are available at the Atlantic Division, Naval Facilities Engineering Command.

CONTENTS

DIVISION

1. General Requirements

SECTION
1A. General Paragraphs
1B. Additional General Paragraphs
1C. Bids
1D. Contractor Quality Control

2. Site Work

SECTION
2A. Earthwork
2B. Storm drainage
2C. Crushed Stone base
2D. Asphalt Concrete Pavement
2E. Trackwork
2F. Fencing
2G. Establishing vegetation
2H. Treated Timber piling
2I. Pavement removal and replacement

3. Concrete

SECTION
3A. Concrete Construction

4. Masonry

SECTION
4A. Brick and concrete masonry unit work

5. Metals: Structural and Miscellaneous

SECTION
5A. Miscellaneous metals
5B. Steel joists
5C. Steel Roof decks
5D. Structural steelwork

6. Carpentry

SECTION
6A. Carpentry and woodwork

7. MOISTURE PROTECTION

SECTION
7A. Roofing and sheet metal work
7B. Roof insulation
7C. Interior membrane Waterproofing
7D. Exterior membrane waterproofing and dampproofing

8. Doors, Windows and Glass

SECTION
8A. Metal doors and frames
8B. Builders Hardware
8C. Metal windows
8D. Glass and glazing
8E. Metal wall louvers
8F. Aluminum Entrances, Doors, Frames and Enclosures
8G. Aluminum curtain walls

9. Finishes

SECTION
9A. Field Painting
9B. Tile Work
9C. Acid Resisting quarry tile floors
9D. Vinyl asbestos tile
9E. Acoustical Work
9F. Metal lathing
9G. Plastering and stuccoing

10. Specialties

SECTION
10A. Metal toilet partitions
10B. Metal Toilet and bath accessories
10C. Metal Laboratory table

11. Equipment

SECTION
11A. Pumps
11B. Water Treatment Equipment
11C. Controls

12. NOT USED

13. Special Construction

SECTION
13A. Prefab metal buildings

14. Conveying Systems

SECTION
14A. Hydraulic Elevator
14B. Bulk lime handling system

15. Mechanical

SECTION
15A. Plumbing
15B. Air Conditioning, heating and ventilating
15C. Plant piping and accessories
15D. Well Construction
15E. Water distribution and raw water Piping
15F. Exterior Sanitary Systems
15G. Gasoline Engine Driven Electric Generator

16. Electrical

SECTION
16A. Interior Electrical
16B. Exterior Electrical

DIVISION 1. GENERAL PARAGRAPHS

SECTION 1A. General Paragraphs
1B. Additional General Paragraphs
1C. Bids
1D. Contractor Quality Control

SECTION 1A. GENERAL PARAGRAPHS

1A.1 General intention. It is the declared and acknowledged intention and meaning to provide and secure water treatment plant, wells, and distribution system complete and ready for use.

1A.2 General description. The work includes providing a water softening and treatment plant of the lime blanket type having a capacity of 2 million gallons per day, including gravity filters, chlorination facilities, fluoridation facilities, office and storage space, concrete ground storage reservoir, wells, water piping, controls, wood piling, railroad trackage, and incidental related work.

1A.3 Location. The work shall be located at the Marine Corps Base, Camp Lejeune, North Carolina, approximately as shown. The exact location will be indicated by the Officer in Charge.

1A.4 Commencement, prosecution, and completion of work. The Contractor will be required to commence work under this contract within 10 calendar days after the date of receipt by him of notice to proceed, to prosecute said work diligently, and to complete the entire work ready for use within 540 calendar days after date of receipt of a notice of award or any other communication authorizing the Contractor to proceed. The time stated for completion shall include final clean-up of the premises.

1A.5 Liquidated damages. In case of failure on the part of the Contractor to complete the work within the time fixed in the contract or any extensions thereof, the Contractor shall pay to the Government as liquidated damages pursuant to Clause 5 of Standard Form 23-A the sum of $500.00 for each day of delay. (See also section entitled "Additional General Paragraphs".)

1A.6 Drawings accompanying specifications. The following drawings accompany this specification and are a part thereof. Drawings are the property of the Government and shall not be used for any purpose other than that contemplated by the specifications. The drawings included with this specification are half size. Full size drawings are available at the bidder's or Contractor's expense. Information on procuring these full size drawings may be obtained from the Officer in Charge of Construction. Full size

drawings may be inspected during regular working hours at the office of the Officer in Charge of Construction.

EFD DWG. NO.	NAVFAC DWG. NO.	Title
84889	1338889	Location and vicinity map
84890	1338890	Overall plan
84891	1338891	Treatment plant site plans
84892	1338892	Site piping plan, railroad and details
84893	1338893	Treatment plant foundation plan and section
84894	1338894	Treatment plant first floor plan
84895	1338895	Treatment plant 2nd floor plan and cab. elevation
84896	1338896	Treatment plant schedules
84897	1338897	Treatment plant elevations
84898	1338898	Treatment plant elevations and details
84899	1338899	Treatment plant details and sections
84900	1338900	Treatment plant sections and details
84901	1338901	Treatment plant stair elevations and details
84902	1338902	Treatment plant details and ceiling plans
84903	1338903	Treatment plant details and sections
84904	1338904	Treatment plant foundation plan
84905	1338905	Treatment plant first floor framing plan
84906	1338906	Treatment plant second floor framing plan
84907	1338907	Treatment plant roof framing plan
84908	1338908	Treatment plant parapet plan and detai
84909	1338909	Treatment plant filter sections and details
84910	1338910	Treatment plant filter sections and details
84911	1338911	Lime hopper - canopy details
84912	1338912	First floor mechanical plan & details
84913	1338913	Second floor mechanical plan
84914	1338914	Mechanical sections
84915	1338915	Treatment plant first floor heating and ventilating
84916	1338916	Treatment plant second floor heating and ventilating
84917	1338917	Pumping station elevations, plan and details
84918	1338918	Reservoir and station foundation plan-pumping station section and detail
84919	1338919	Ground storage reservoir
84920	1338920	Reservoir sections
84921	1338921	Reservoir details
84922	1338922	Well site plans
84923	1338923	Well site plans
84924	1338924	Raw water lines

EFD DWG. NO.	NAVFAC DWG. NO.	Title
84925	1338925	Raw Water lines
84926	1338926	Raw Water lines
84927	1338927	Distribution lines
84928	1338928	Distribution lines
84929	1338929	Distribution lines
84930	1338930	Distribution lines
84931	1338931	Flow diagram
84932	1338932	1st floor treatment plant electrical power and lighting
84933	1338933	2nd floor treatment plant electrical power and lighting
84934	1338934	Pumping station electrical plan
84935	1338935	Electrical power riser diagram
84936	1338936	Well electrical plans
84937	1338937	Well Electrical plans

1A.7 Factory inspection. (See Clause 10 of Standard Form 23-A and Clause 26 of form NAVFAC 4-4330/5.) Factory inspection shall apply specifically, but not necessarily exlcusively, to the following material: Cement- Factory inspection of other material and equipment for which tests at the place of manufacture are required may be waived at the option of the Government, if notarized copies of factory reports are furnished that show compliance with the specification requirements. Factory inspection will not be required for lumber if it is grade-marked and trade-marked by the association under whose rules it is graded, or if it is accompanied by certificates of inspection issued by the association under whose rules it is graded or by another inspection agency that is satisfactory to the Officer in Charge of Construction. The Government reserves the right to to charge to the Contractor any additional cost of Government inspection and tests when materials and equipment are not ready at the time inspection and tests are requested by the Contractor.

1A.8 Samples. As soon as practicable, and before installation, the Contractor shall submit to the Contractor's Quality Control representative, for approval samples of the following materials and equipment: Brick, crushed stone base, softener catalyst, filter sand and gravel, vinyl asbestos tile, quarry tile, accoustical ceiling. Approved sample of all listed materials shall be delivered to the OICC for record purposes.

1A.9 Information required of the Contractor. The Contractor shall furnish to the OICC, at least 14 days before installation, the names and addresses of the manufacturers of the following items, together with catalog information or other identifying description: Pumps, treatment equipment, filters, controls, elevator, conveying equipment, electrical panels and switchgear, valves, all mechanical and electrical equipment.

1A.10 Drawings required of the Contractor. Specification MIL-D-1000 shall be used as a guide, an its use is encouraged, for all drawings and data submitted by the Contractor. Conformance to the provisions of specification

MIL-D-1000 is not mandatory for maps, sketches, presentation drawings, perspectives, renderings, and all other drawings not requiring Naval Facilities Engineering Command drawing numbers. Before starting the fabrication or installation of any of this work, such drawings as may be required shall be submitted and approved by the Contractor's Quality Control representative, including those showing: treatment equipment, filters, pumps, controls, structural and miscellaneous steel, piping layouts, conveying equipment, electrical panels and switchgear, railroad trackwork and accessories, prefabricated metal buildings, well details, sluice gates, all electrical and mechanical systems and components.

1A.11 Minimum wage rates and otherlabor standards. The contractor shall pay mechanics and laborers employed or working directly upon the site of the work wage rates not less than those contained in the attached wage determination decision of the Secretary of labor No. AJ-17,771. **Building Construction Schedule shall apply for all work, except Highway Construction Schedule shall apply for paving, establishing vegetation, trackwork, exterior storm and sanitary drainage.**

Other requirements and information are contained in the section entitled "Additional General Paragraphs".

1A.12 Schedule of prices. Within 5 days of receipt of a notice of award, the Contractor shall prepare and submit to the Officer in Charge, in octuplicate, a schedule of prices on form NAVDOCKS 83, revised August 1963, Schedule of Prices. The schedule shall consist of detailed breakdown of the contract price, giving the quantities for each of the various kinds of work, the unit prices, and the total prices therefor. The detailed breakdown shall be segregated under each of the construction categories given hereinafter. The required schedule must be based on the actual breakdown of the bid price. Accordingly subcontractors who may be involved in work under more than one of these categories should be advised of this requirement in order to assure their being in the position to furnish these data without delay. The format and content required shall be as further prescribed by the Officer in Charge and shall be subject to his approval. The submission of the required data shall not otherwise affect the contract terms. Form NAVDOCKS 83 will be furnished by the Officer in Charge of Construction.

1A.13 Contractor's Invoice and Contract Performance Statement. Requests for payment in accordance with the terms of the contract shall consist of:

(a) Contractor's Invoice on form NAVFAC 10-7300/30 (4/68), which shall show, in summary form, the basis for arriving at the amount of the invoice, and

(b) Contract Performance Statement on form NAVFAC 10-7300/31 (4/68), which shall show, in detail, the estimated cost percentage of completion and value of completed performance for each of the construction categories given hereinafter.

The format, content, and number of copies required shall be as further prescribed by the Officer in Charge and shall be subject to his approval. The submission of the required data shall not otherwise affect the contract terms. Forms NAVFAC 10-7300/30 and 10-7300/31 will be furnished by the Officer in Charge of Construction.

1A.14 Construction categories. The construction categories given below may be amended by the Officer in Charge, as necessary, during the course of the work. The following construction categories shall apply to all work covered by this specification:

PROGRAM	CATEGORY		DESCRIPTION
	Prim.	Secondary	

(To be Furnished later)

1A.15 North Carolina Sales and Use Tax is required. (See also section entitled Additional General Paragraphs.

1A.16 Technical publications. The contractor shall furnish three copies each of installation, operation maintenance manuals and parts list for all mechanical and electrical equipment as follows:

1A.16.1 Operating instructions for the principal plant mechanical and electrical components, for use by operating personnel, shall be provided. They shall be laminated between the thermoplastic sheets and affixed where directed. The instructions shall describe the function of the equipment, its most economical operation, start up and shut down procedures, procedures to follow in the event of failure, normal maintenance practices, and caution and warning notices.

1A.16.2 Maintenance and operation manual shall be furnished to the Officer in Charge of Construction for approval. The manual shall be mounted in flexible binders with oil resistant covers and shall contain, but not be limited to, installation and operating instructions,maintenance procedures, illustrations, drawings, detailed descriptions, tests, adjustment, safety precautions, and parts list.

1A.16.3 Parts list, giving part numbers and prices for the equipment furnished, shall be submitted to the Officer in Charge of Construction and as soon as practicable after the award of the contract, but not later than

90 days after notice of award has been received.

1A.17 Identification. All catalog cuts, shop drawings, samples and other data submitted for approval by the Contractor shall specifically identify the specification paragraph or contract drawing by number where each item submitted is required to be provided. All submittals shall be clearly marked in ink to indicate the specific items submitted for approval.

1A.18 Certificate of current cost of pricing data is required. See also section entitled "Additional General Paragraphs".

1A.19 Project identification signboard. A project identification signboard shall be provided. See also section entitled "Additional General Paragraphs".

1A.20 Inspector's office. The Contractor shall provide not less than 400 square feet of usable office space for use by Government personnel. The space shall be within a weathertight building, have adequate heating and toilet facilities, light and ventilation. The office shall contain two plan tables, 4 feet by 8 feet, suitable for examination of drawings. All utilities shall be furnished by the Contractor. The office shall be provided at a location selected by the Officer in Charge. After completion of the work, the Contractor shall remove the building from the site.

1A.21 As built record of materials used in buildings. Prior to completion of the contract, the Contractor shall furnish an "as built" record of materials used in the construction. Submittal of this data is made a condition for final payment under the contract. Where several manufacture's brands, types, or classes of the items listed have been used in the project, the specific areas where each item was used shall be designated. Designations shall be keyed to the area and space designations on the contract drawings. Information shall be furnished, typewritten, for the listed materials and in the following format:

MATERIAL	SPEC. DESIGNATION	MANUFACTURER	MATERIAL USED MFG. DESIGNATION	WHERE USED
Facing Brick				
Built up roofing				
Stucco				
Windows				
Doors and Frames				
Ceramic Tile				
Resilient Tile				
Quarry tile				
Roof insulation				
Caulking				
Accoustical tile				
Hardware				
Exterior and interior membrane waterproofing				

SAMPLE

AS-BUILT RECORD OF MATERIALS USED IN BUILDING

MATERIAL	SPEC. DESIGNATION	MANUFACTURER	MATERIAL USED MFG. DESIGNATION	WHERE USED
Built up roofing	7Yk, type 4ACS	Ageless Manufacturing Co.	No. 15 asphalt saturated rag felt (perforated) AM 170 asphalt	All concrete roofs with slopes 1/2 inch and less
Plaster	Lightweight aggregate base coats	Century 21 Corp.	Blue top Hi lite Plaster	All plastered interior surfaces except toilets
Windows	P-A2	Small Time Corp.	Tubular sections, Series 535	All projected windows
Resilient tile	SS-T-312, Type IV	Outer Space Co.	Moonshot 70	All offices spaces
			Space Probe 30	Corridors and entrance lobby

1A.21 Scheduling the work. Immediately after award, the contractor shall meet with the Officer in Charge and prepare a schedule of work. Connections to the existing water distribution system at Paradise Point and on Stone Street shall be made without interruption of service by proper positioning of valves in the existing system. Connections to the existing system on Brewster Boulevard at the school and Holcomb Boulevard shall be made in such a manner as to prevent interruption of service to the School while the school is occupied. In addition, the 10 inch line in Holcomb Boulevard serving the Midway Park area shall not be interrupted longer than 8 hours. Permission to interrupt any utility service shall be requested in writing at least 7 days in advance and approval shall be received before any service is interrupted. Interruptions of Utility services will be allowed only when they will cause no interference with the operations of the activity. The Contractor shall remove all debris from all spaces being used by the activity at the end of each shift or more frequently if required to keep the space usable.

1A 22 Boring logs. Test Boring logs are furnished to make available to the Contractor the information obtained by Government investigation. The boring logs are not a part of the contract and no guarantee is made as to their accuracy or completeness.

1A 23 Quarantine for white fringed beetles. The entire Camp Lejeune reservation including Camp Geiger and the Marine Corps Air Facility, New River, have been quarantined by the United States and North Carolina Departments of Agriculture for the white fringed beetle. Compliance with the quarantine regulations established by these authorities as set forth in the U. S. D. A. Quarantine No. 72 and North Carolina Quarantine No. 7 is required for operations hereunder. Pertinent requirements of the quarantines include the following:

(a) Certification is required for the following articles and they shall not be moved from the reservation unless accompanied by a valid inspection certificate issued by an authorized white fringed beetle inspector.

(1) Soil, sand, or gravel moved independently or attached to other articles, such as heavy equipment including drag lines, road-grading machines, ditch diggers, bulldozers, and equipment with tracks or cleats.

(2) Nursery stock, plants and sod.

(3) Scrap metal

Authorization for movement of equipment shall be obtained from the Officer in Charge, and requests for inspection shall be made sufficiently in advance of the date of movement to permit arrangements for the services of authorized inspectors. The equipment shall be prepared and assembled so that it may be readily inspected. Articles and materials requiring certification for movement shall be removed from the equipment by washing with water and such other means as necessary to accomplish complete removal. Resulting spoil shall be wasted as directed.

SECTION 1B. ADDITIONAL GENERAL PARAGRAPHS

1B.1 Form of contract. The contract will be executed on Standard Form 23, January 1961 edition, Construction Contract, and will include Standard Form 19-A, April 1965 edition, Labor Standards Provisions; Standard Form 19-B, December 1965 edition, Representations and Certifications; Standard Form 23-A, June 1964 edition, General Provisions; and Form NAVFAC 4-4330/5, (Revised 1-70), Additional General Provisions.

Clause 3 and Clause 4 of Standard form 23-A are deleted and the following new clauses substituted in lieu thereof:

"3. CHANGES

"(a) The Contracting Officer may, at any time, without notice to the sureties, by written order designated or indicated to be a change order, make any change in the work within the general scope of the contract, including but not limited to changes:

"(i) in the specifications (including drawings and designs);

"(ii) in the method or manner of performance of the work;

"(iii) in the Government-furnished facilities, equipment, materials, services, or site, or

"(iv) directing acceleration in the performance of the work.

"(b) Any other written order or an oral order (which terms as used in this paragraph (b) shall include direction, instruction, interpretation, or determination) from the Contracting Officer, which causes any such change, shall be treated as a change order under this clause, provided that the Contractor gives the Contracting Officer written notice stating the date, circumstances, and source of the order and that the Contractor regards the order as a change order.

"(c) Except as herein provided, no order, statement, or conduct of the Contracting Officer shall be treated as a change under this clause or entitle the Contractor to an equitable adjustment hereunder.

"(d) If any change under this clause causes an increase or decrease in the Contractor's cost of, or the time required for, the performance of any part of the work under this contract, whether or not changed by any order, an equitable adjustment shall be made and the contract modified in writing accordingly: Provided, however, That except for claims based on defective specifications, no claim for any change under (b) above shall be allowed for any costs incurred more than 20 days before the Contractor gives written notice as therein required: And provided further, That in the case of defective specifications for which the Government is responsible, the equitable adjustment shall include any increased cost reasonably incurred by the Contractor in attempting to comply with such defective specifications.

"(e) If the Contractor intends to assert a claim for an equitable adjustment under this clause, he must, within 30 days after receipt of a written change order under (a) above or the furnishing of a written notice under (b) above, submit to the Contracting Officer a written statement setting forth the general nature and monetary extent of such claim, unless this period is extended by the Government. The statement of claim hereunder may be included in the notice under (b) above.

"(f) No claim by the Contractor for an equitable adjustment hereunder shall be allowed if asserted after final payment under this contract.

"4. DIFFERING SITE CONDITIONS

"(a) The Contractor shall promptly, and before such conditions are disturbed, notify the Contracting Officer in writing of: (1) Subsurface of latent physical conditions at the site differing materially from those indicated in this contract, or (2) unknown physical conditions at the site, of an unusual nature, different materially from those ordinarily encountered and generally recognized as inherent in work of the character provided for in this contract. The Contracting Officer shall promptly investigate the conditions, and if he finds that such conditions do materially so differ and cause an increase or decrease in the Contractor's cost of, or the time required for, performance of any part of the work under this contract, whether or not changed as a result of such conditions, an equitable adjustment shall be made and the contract modified in writing accordingly."

"(b) No claim of the Contractor under this clause shall be allowed unless the Contractor has given the notice required in (a) above; provided, however, the time prescribed therefor may be extended by the Government.

"(c) No claim by the Contractor for an equitable adjustment hereunder shall be allowed if asserted after final payment under this contract.

Clause 5 of Standard Form 23-A is amended by adding the following sentence at the end of paragraph (d): "As used in this Clause 5(d)(1), the term "subcontractors or suppliers" means subcontractors or suppliers at any tier." The first sentence of subparagraph (a) of Clause 19 of Standard Form 23-A is amended by deleting the words "and Executive Order 10582, December 17, 1954 (3 CFR Supp.)".

Clause 21 of Standard Form 23-A

(a) Clause 21 of Standard Form 23-A is amended by deleting references to the President's Committee on Equal Employment Opportunity, Executive Order 10925 of March 6, 1961, as amended, and Section 303 of Executive Order No. 10925 of March 6, 1961, as amended, and substituting therefor the Secretary of Labor, Executive Order No. 11246 of September 23, 1965 and Section 204 of Executive Order 11246 of September 24, 1965, respectively.

(b) Clause 21 of Standard Form 23-A is amended to insert after the reference to "Executive Order 10925" the following: "or the clause contained in Section 201 of Executive Order No. 11114.

(c) The following additional footnote is added to Clause 21 of Standard Form 23-A: "In accordance with regulations of the Secretary of Labor, the rules, regulations, orders, instructions, designations, and other directives issued by the President's Committee on Equal Employment Opportunity and those issued by the heads of various department or agencies under or pursuant to any of the Executive Orders superseded by Executive Order 11246, shall, to the extent that they are not inconsistent with Executive Order 11246, remain in full force and effect unless and until revoked or superseded by appropriate authority. References in such directives to provisions of the superseded orders shall be deemed to be references to the comparable provisions of Executive Order 11246.

The following new clause is added as an additional general provision of Form NAVFAC 4-4330/5 (1-70):

"102. SUSPENSION OF WORK

"(a) The Contracting Officer may order the Contractor in writing to suspend, delay, or interrupt all or any part of the work for such period of time as he may determine to be appropriate for the convenience of the Government.

"(b) If the performance of all or any part of the work is, for an unreasonable period of time, suspended, delayed, or interrupted by an act of the Contracting Officer in the administration of this contract, or by his failure to act within the time specified in this contract (or if no time is specified, within a reasonable time), an adjustment shall be made for any increase in the cost of performance of this contract (excluding profit) necessarily caused by such unreasonable suspension, delay, or interruption and the contract modified in writing accordingly. However, no adjustment shall be made under this clause for any suspension, delay, or interruption to the extent (1) that performance would have been so suspended, delayed, or interrupted by any other cause, including the fault or negligence of the Contractor or (2) for which an equitable adjustment is provided for or excluded under any other provision of this contract.

"(c) No claim under this clause shall be allowed (1) for any costs incurred more than 20 days before the Contractor shall have notified the Contracting Officer in writing of the act or failure to act involved (but this requirement shall not apply as to a claim resulting from a suspension order), and (2) unless the claim, in an amount stated, is asserted in writing as soon as practicable after the termination of such suspension, delay, or interruption, but not later than the date of final payment under the contract."

1B.2 Performance and payment bonds, executed on Standard Form 25, June 1967 edition, Performance Bonds, and Standard Form 25-A, June 1964 edition, Payment Bond, will be required as stipulated on the reverse side of Standard Form 20, January 1961 edition, Invitation for Bids. The performance bond shall specifically provide coverage for taxes imposed by the United States which are collected, deducted, or withheld from wages paid by the Contractor in carrying out the contract with respect to which such bond is furnished.

1B.3 Damages for delay. The Government will take no action pursuant to Clause 5 of Standard Form 23A, Liquidated damages, to terminate the right of the Contractor to proceed or to assess liquidated or actual damages where failure of the Contractor to complete the work within the time specified is due solely to the operation of the Defense Materials System and Priorities, provided the Contractor and his subcontractors comply with the provisions of this System and the Contractor's lateness in completion of the work is not otherwise caused by the fault or negligence of the Contractor. Such delays will be excusable within the meaning of Clause 5, and the Contractor will be entitled to a time extension by reason thereof.

1B.4 Specifications and standards. The specifications and standards referenced in this specification (including addenda, amendments, and errata listed) shall govern in all cases where references thereto are made. In case of difference between the referenced specifications or standards and this specification or its accompanying drawings, this specification and its accompanying drawings shall govern to the extent of such difference: otherwise, the referenced specifications and standards shall apply. The requirements for packaging, marking, and preparation for shipment or delivery included in the referenced specifications shall apply only to materials and equipment that are furnished directly to the Government and not to materials and equipment that are to be furnished and installed by the Contractor. Unless specified otherwise in this specification, the requirements included in referenced specifications are modified as follows:

Radio-interference suppression: Not required.
Fungus control: Not required.
Identification or name plate: Manufacturer's standard acceptable.
Technical publications: Manufacturer's standard acceptable.
Production test model: In lieu of tests performed on a production test model, such tests, if required at the manufacturer's plant, shall be performed on the equipment being furnished under this specification.

When a number in parentheses is suffixed to a referenced Yards and Docks/NAVFAC, Federal or Military specification or standard symbol, it denotes the effective amendment or change to the document.

Referenced specifications or standards, other than Yards and Docks/NAVFAC, Federal, and Military, are not available for distribution by the Department of the Navy. Requests therefor should be made to the issuing organization. They may be examined at the office where the bids are being received.

1B.5 Work outside regular hours. If the Contractor desires to carry on work outside the regular hours or on Saturdays, Sundays, or holidays, he shall submit application to the Officer in Charge, but shall allow ample time to enable satisfactory arrangements to be made by the Government for inspecting the work in progress. At night he shall light the different parts of the work in an approved manner.

1B.6 Optional requirements. Where a choice of materials and/or methods is permitted herein, the Contractor will be given the right to exercise the option unless stated specifically otherwise.

1B.7 Definitions. Where "as shown", "as indicated", "as detailed", or words of similar import are used, it shall be understood that reference is made to the drawings accompanying this specification unless stated otherwise. Where "as directed", "as required", "as permitted", "approved", "acceptance", or words of similar import are used, it shall be understood that the direction, requirements, permission, approval, or acceptance of the Officer in Charge of Construction is intended unless stated otherwise. As used in this specification, "provide" shall be understood to mean "provide complete in place", that is, "furnish and install". Where "Bureau", "Bureau of Yards and Docks", "NAVFAC" or words or phrases of similar import appear in this specification, on the drawings, or in documents referenced by the specification or the drawings, it shall be understood to mean the "Naval Facilities Engineering Command".

1B.8 Security requirements. No employee or representative of the Contractor will be admitted to the site of the work unless he furnishes satisfactory proof that he is a citizen of the United States, or if an alien, his residence within the United States is legal.

1B.9 Methods and schedules of procedures. The work shall be executed in a manner and at such times that will cause the least practicable disturbance to the occupants of the buildings and the normal activities of the station. Before starting any work, the sequence of operations and the methods of conducting the work shall have been approved.

1B.10 Approval of samples, cuts, and drawings. Matter submitted for approval shall be accompanied by complete information concerning the material, articles, and/or design proposed for use in sufficient detail to show compliance with the specification, and shall be approved before incorporation into the work. Approval thereof will not be construed as relieving the Contractor of compliance with the specification, even if such approval is made in writing, unless the attention of the Officer in Charge is called to the noncomplying features by letter accompanying the submitted matter. Partial submittals or submittals of less than the whole of any system made up of interdependent components, will not be considered. Approval of drawings, cuts, and samples by the Officer in Charge shall not be construed as a complete check or approval of the detailed dimensions, weights, gauges and similar details of the proposed articles. The conformance of such details with the contract requirements, together with the necessary coordination of dimensions and details between the various elements of the work and between the various subcontractors and suppliers, shall be solely the responsibility of the Contractor, approval of submitted matter notwithstanding.

1B.11 Operation of station utilities. The Contractor shall not operate nor disturb the setting of any control devices in the station utilities system, including water, sewer, electrical and steam services. The Government will operate the control devices as required for normal conduct of the work. The Contractor shall notify the Officer in Charge, giving reasonable advance notice when such operation is required.

1B.12 Examination of premises. Before submitting proposals, bidders are expected to visit and inspect the site of the work and satisfy themselves as to the physical conditions at the site; the general and local conditions, including availability of labor; the nature and extent of the work; the character and effect of existing adjoining and/or adjacent work; and other factors that can affect the cost of the performance of the contract to the extent that such information is reasonably obtainable.

1B.13 Changed conditions. Wherever changed conditions as defined in Clause 4 of Standard Form 23-A are encountered, and wherever conditions exposed during the course of the work necessitate a change from quantities indicated or specified as either estimated quantities or as a basis for bids, whether or not provision for a change in price for such variation is specified, the Officer in Charge must be notified in writing and written directions to do so must be obtained before quantities stated in the contract documents are exceeded.

1B.14 Protection and repairs. The Contractor shall comply with the fire prevention requirements, security rules, and regulations of the activity; and shall provide approved means necessary for the protection of

all Government and private property, including contents of buildings affected directly or indirectly by his operations. All damage to Government or private property, resulting directly or indirectly from the Contractor's actions, shall be made good by him without expense to the Government.

1B.15 Existing work damaged or otherwise affected by the Contractor's operations shall be restored to a condition as good as existed before the work was commenced, except where indicated or specified otherwise. Where new construction adjoins, connects to, or abuts the existing work, the junction shall be made in a substantial workmanlike and weathertight manner as the case requires. All new work shall match, as nearly as practicable, the existing adjoining and/or adjacent similar work unless indicated or specified otherwise. Except where specifically designated as being retained by the Government or to be reinstalled in the new construction, all materials, fixed equipment, and debris resulting from demolition and removal operations, shall be removed by the Contractor from the limits of the Government reservation at such times during the progress of the work as directed.

1B.16 Layout of Work (January 1965). The Contractor shall lay out his work from Government-established base lines and bench marks indicated on the drawings and shall be responsible for all measurements in connection therewith. The Contractor shall furnish, at his own expense, all stakes, templates, platforms, equipment, tools, and materials and labor as may be required in laying out any part of the work from the base lines and bench marks established by the Government. The Contractor will be held responsible for the execution of the work to such lines and grades as may be established or indicated by the Officer in Charge of Construction. It shall be the responsiblilty of the Contractor to maintain and preserve all stakes and other marks established by the Officer in Charge of Construction until authorized to remove them. If such marks are destroyed, by the Contractor or through his negligence, prior to their authorized removal, they may be replaced by the Officer in Charge of Construction at his discretion. The expense of replacement will be deducted from any amounts due or to become due the Contractor.

1B.17 Payrolls and affidavits. The Prime Contractor, subcontractor, and sub-subcontractors will be required to submit a copy of each weekly payroll together with a Contractor's Weekly Statement of Compliance covering the payroll to the Officer in Charge of Construction within seven days after the regular payment date of the payroll period. The receipt of these payrolls and statements is made a condition precedent to payment for any amounts due under the contract.

1B.17.1 Payroll. The payroll shall be indentified by the name of the Contractor, contract number, and the location of the site of the work. Payrolls shall state accurately and completely for each employee, his name, classification, social security number, rate of pay, daily and weekly hours worked, wages earned, all deductions from such wages and the actual weekly wages paid. Contractors are required to submit employee's address with the payroll on which the employee's name first appears.

1B.17.2 Contractor's Weekly Statement of Compliance shall be executed on the form furnished for the purpose by the Officer in Charge. Contractors shall list by title or name, all deductions made, omitting from the listing the dollar amount of the deductions.

1B.17.3 A sworn affidavit accomplished by the Contractor, stating that he and his subcontractors have complied with the labor standards provisions of the contract, must accompany each request for reimbursement. Affidavit form will be furnished by the Officer in Charge of Construction.

1B.18 Subcontractors and personnel. Promptly after the award of the contract, the Contractor shall submit to the Officer in Charge of Construction, in triplicate, a list of his subcontractors and the work each is to perform. On this form shall appear the names of the key personnel of the Contractor and subcontractors, together with their home addresses and telephone numbers, for use in event of any emergency. From time to time as changes occur and additional information becomes available, the Contractor shall amplify, correct, and change the information contained in previous lists.

1B.19 Storm protection. Should warnings of winds of gale force or stronger be issued, the Contractor shall take every practicable precaution to minimize danger to persons, to the work, and to adjacent property. These precautions shall include closing all openings, removing all loose materials, tools and/or equipment from exposed locations; and removing or securing scaffolding and other temporary work.

1B.20 Safety requirements. A copy of the Department of the Army, Corps of Engineers, "General Safety Requirements", referenced in Clause 56 of form NAVFAC 4-4330/5, may be examined or obtained on application to the office where the bids are being received. Prior to starting the work, the Contractor shall meet in conference with representatives of the Officer in Charge to discuss and develop mutual understandings relative to administration of the safety program.

1B.21 As-built drawings. On completion of the work, one print of each of the drawings accompanying this specification shall be neatly and clearly marked in red to show all variations between the construction actually provided and that indicated or specified in the contract documents, and delivered to the Officer in Charge. Where a choice of materials and/or methods is permitted herein, and where variations in the scope or character of the work from the entire work indicated or specified are permitted either by award on bidding items specified for that purpose or by subsequent change to the contract, the as-built drawings shall define the construction actually provided. The representation of such variations shall conform to standard drafting practice and shall include such supplementary notes, legends, and details as may be necessary for legibility and clear portrayal of the as-built construction; the marked prints shall be subject to approval before acceptance.

1B.22 Responsibility for testing. Where tests are specified to be made by the Government, the Government will make the initial tests at its expense. Should the initial samples fail to meet the requirements of the specifications, all succeeding tests of additional samples shall be made by an approved testing laboratory or agency at the expense of the Contractor.

1B.23 Schedule of prices. Unless otherwise specified in the section entitled "General Paragraphs", upon receipt of a notice of award, the Contractor shall prepare a detailed breakdown of the contract price, giving the quantities of the various kinds of work and the unit and total prices therefor. This breakdown shall be submitted promptly to the Officer in Charge on form NAVDOCKS 83, revised August 1963, Schedule of Prices, in octuplicate. The forms will be furnished by, and shall be executed in a manner satisfactory to, the Officer in Charge of Construction. The submission of this breakdown will not affect the contract terms.

1B.24 Prints furnished to Contractor. Five one-half size prints and one set of full-size reproducibles of each drawing accompanying this specification will be furnished the Contractor without charge. Additional prints and full-size prints required by the Contractor shall be reproduced by him at his own expense.

1B.25 Priorities, allocations, and allotments. The Contractor agrees, in the procurement and use of materials required for the performance of this contract, to comply with the provisions of all applicable rules and regulations of the Business and Defense Services Administration, including Defense Materials System regulations. If the intital contract price hereunder does not exceed $100,000, this project is made a rated order pursuant to DMS Regulation 1 and is assigned DO rating C-2 unless a higher rating is specified in the section entitled "General Paragraphs". The Contractor is hereby made a self-authorizing Contractor as defined in Section 3(g) of that regulation and is required to use the self-authorization provision of Section 9 in obtaining controlled materials, as well as products and materials other than controlled materials needed to fill this rated order.

1B.26 Location of underground utilities. Where existing piping, utilities, and underground obstructions of any type are indicated in locations to be traversed by new piping, ducts, and other work provided hereunder, and are not indicated or specified to be removed, the elevations of the existing utilities and obstructions shall be determined before the new work is laid closer than the nearest manhole or other structure at which an adjustment in grade could be made. For any additional work required by reason of conflict between the new and existing work, an adjustment in contract price will be made in accordance with Clause 4 of Standard Form 23-A.

1B.27 Notice Regarding Buy American Act (October 1966). The Buy American Act (41 USC 10a-10d) generally requires that only domestic construction materials be used in the performance of this contract. Exception from the Buy American Act shall be permitted only in the case of nonavailability of domestic construction materials. A bid or proposal offering nondomestic construction material will not be accepted

unless specifically approved by the Office of the Secretary of Defense. When a bidder or offerer proposes to furnish nondomestic construction material, his bid or proposal must set forth an itemization of the quantity, unit price, and intended use of each item of such nondomestic construction material. When offering nondomestic construction material pursuant to this paragraph, bids or proposals may also offer, at stated prices, any available comparable domestic construction material, so as to avoid the possibility that failure of a nondomestic construction material to be acceptable under this paragraph will cause rejection of the entire bid.

1B.28 Availability of utility services. In accordance with Clause 71 of form NAVFAC 4-4330/5, as modified herein, electric and water service will be made available to the Contractor at the nearest available existing outlets at prevailing Government rates which may be obtained upon application to the Commanding Officer. The Contractor will be required to furnish all labor, equipment and materials to make utilities connections and to furnish and install valves, transformers, and meters for each service. The Contractor shall determine that each source is adequate and suitable for requirements of his equipment before making connection and on completion, shall reinstate all utility sources used to their original condition or a condition satisfactory to the Officer in Charge. No guaranty of any kind is made as to the continuity and level of the supply of such utility services. They will be reduced or suspended as the needs of the Government require and the Government shall not be liable for any damages sustained as a result of such reduction or suspension, nor for any failure of the supply lines to the Contractor's connections. Unless specified otherwise in section entitled "General Paragraphs", final connections to existing utilities shall be made by the Contractor under the direct supervision of Government personnel.

1B.29 Minimum wage rates and other labor standards. Any class of laborers and mechanics not listed in the Secretary's decision, which will be employed on the contract, shall be classified or reclassified by the Contractor or subcontractor conformably to the Secretary's decision, subject to the approval of the Contracting Officer. Mechanics and laborers shall be classified in conformance with prevailing practice. In the event of any difference between the Contractor and the Government concerning the proper wage rates to be paid, the classification of employees to conform to prevailing practice, the amount of wages due employees, or any other application or interpretation of the labor standards provisions of this contract, the difference shall be referred to the Contracting Officer (the Commander of the Naval Facilities Engineering Command or his specially authorized representative), and the Contracting Officer shall determine the matter with advice from and reports to the Secretary of Labor as required by Department of Labor regulations. This determination shall not be appealable under the Disputes clause, and the Contractor shall comply promptly with the determination of the Contracting Officer. If the Contracting Officer determines that the Contractor has not satisfied his obligations under the labor standards provisions of the contract, the Contracting Officer will forward a report on the violations to the Department of Labor and the Comptroller General for appropriate action.

1B.29.1 Investigation of labor conditions. The wage determination decision of the Secretary of Labor attached hereto, or included by addendum, is made a part of this contract solely for the purpose of setting forth the minimum hourly wage rates required to be paid by the Davis-Bacon Act and is not to be considered as a guaranty, warranty or representation as to the wage determination decision, the wage rates therein, the prevailing wages, or the availability of labor at the wage rates indicated. Bidders are advised to make their own investigations and to rely solely upon their own information as to local labor conditions, such as wage rates necessary to attract labor, the length of the workday and workweek, overtime compensation, health and welfare contributions and available labor supply, and as to prospective changes or adjustments of wage rates or employment conditions in the area concerned that might affect the operations under the contract. Neither a mistake in attaching the wage determination decision of the Secretary of Labor or in the determination or statement of the wage rates set forth therein shall entitle the bidder to the cancellation of his bid or contract, to an increase in the contract price, or to other additional payment or recovery.

1B.29.2 Apprentices employed pursuant to the wage determination decision contained in this contract must be registered in a bona fide appreticeship program registered with a state apprenticeship council recognized by the Federal Committee on Apprenticeship, Department of Labor, or if no such recognized council exists in a state, a program registered with the Bureau of Apprenticeship, Department of Labor. The ratio of apprentices to journeyman mechanics shall not exceed that recognized by the agency of registry as prevailing.

1B.29.3 Posting of wage rates. Where compliance with Clause 1 of Standard Form 19-A requires posting the wage determination decision in an exterior location, it shall, along with other documents required to be similarly posted, be displayed in a weatherproof display case.

1B.30 Equal Employment Opportunity.

(a) Certification of nonsegregated facilities. By the submission of this bid, the bidder, offeror, applicant, or subcontractor certifies that he does not maintain or provide for his employees any segregated facilities at any of his establishments, and that he does not permit his employees to perform their services at any location, under his control, where segregated facilities are maintained. He certifies further that he will not maintain or provide for his employees any segregated facilities at any of his establishments, and that he will not permit his employees to perform their services at any location, under his control, where segregated facilities are maintained. The bidder, offeror, applicant or subcontractor agrees that a breach of this certification is a violation of the Equal Opportunity clause in this contract. As used in this certification, the term "segregated facilities" means any waiting rooms, work areas, rest rooms and wash rooms, restaurants and other eating areas, time clocks, locker rooms and other storage or dressing areas, parking lots, drinking fountains, recreation or entertainment areas, transportation,

and housing facilities provided for employees which are segregated by explicit directive or are in fact segregated on the basis of race, creed, color, or national origin, because of habit, local custom or otherwise. He further agrees that (except where he has obtained identical certifications from proposed subcontractors for specific time periods) he will obtain identical certifications from proposed subcontractors prior to the award of subcontracts exceeding $10,000 which are not exempt from the provisions of Equal Opportunity clause; that he will retain such certifications in his files; and that he will forward the following notice to such proposed subcontractors (except where the proposed subcontractors have submitted identical certifications for specific time periods):

NOTICE TO PROSPECTIVE SUBCONTRACTORS OF REQUIREMENT FOR CERTIFICATIONS OF NONSEGREGATED FACILITIES.

A certification of Nonsegregated Facilities, as required by the May 9, 1967 order on Elimination of Segregated Facilities, by the Secretary of Labor (32 Fed. Reg. 7439, May 19, 1967) must be submitted prior to the award of a subcontract exceeding $10,000 which is not exempt from the provisions of the Equal Opportunity clause. The certification may be submitted either for each subcontract or for all subcontracts during a period (i.e., quarterly, semiannually, or annually). (Mar. 1968) (Note: The penalty for making false statements in offers is prescribed in 18 U.S.C. 1001).

(b) Certification of nonsegregated facilities by subcontractors and federally assisted construction contractors (Mar. 1968). Prior to the award of any subcontract, required to contain the Equal Opportunity clause contained in this contract, the Contractor shall obtain the certification set forth in 2-201(a) (xli). This certification may be required by the Contractor, either for each subcontract or for all subcontracts during a period (i.e., quarterly, semiannually, or annually).

(c) During the performance of this contract, the Contractor agrees as follows:

(1) The Contractor will not discriminate against any employee or applicant for employment because of race, color, religion, sex, or national origin. The Contractor will take affirmative action to ensure that applicants are employed, and that employees are treated during employment, without regard to their race, color, religion, sex, or national origin. Such action shall include but not be limited to the following: Employment, upgrading, demotion, or transfer, recruitment or recruitment advertising; layoff or termination; rates of pay or other forms of compensation; and selection for training, including apprenticeship. The Contractor agrees to post in conspicuous places, available to employees and applicants for employment, notices to be provided by the Contracting Officer setting forth the provisions of this nondiscrimination clause.

(2) The Contractor will, in all solicitiations or advertisements for employees placed by or on behalf of the Contractor, state that all qualified applicants will receive consideration for employment without regard to race, color, religion, sex, or national origin.

(3) The Contractor will send to each labor union or representative of workers with which he has a collective bargaining agreement or other contract or understanding, a notice to be provided by the agency Contracting Officer, advising the labor union or workers' representative of the contractor's commitments under Section 202 of Executive Order 11246 of September 24, 1965, and shall post copies of the notice in conspicuous places available to employees and applicants for employment.

(4) The Contractor will comply with all provisions of Executive Order 11246 of September 24, 1965, and of the rules, regulations, and relevant orders of the Secretary of Labor.

(5) The Contractor will furnish all information and reports required by Executive Order 11246 of September 24, 1965, and by the rules, regulations, and orders of the Secretary of Labor or pursuant thereto, and will permit access to his books, records, and accounts by the contracting agency and the Secretary of Labor for purposes of investigation to ascertain compliance with such rules, regulations, and orders.

(6) In the event of the Contractor's noncompliance with the nondiscrimination clauses of this contract or with any of such rules, regulations, or orders, this contract may be cancelled, terminated or suspended in whole or in part, and the Contractor may be declared ineligible for further Government contracts in accordance with procedures authorized in Executive Order 11246 of September 24, 1965, and such other sanctions may be imposed and remedies invoked as provided in Executive Order 11246 of September 24, 1965, or by rule, regulation, or order of the Secretary of Labor, or as otherwise provided by law.

(7) The Contractor will include the provisions of Paragraph (1) through (7) in every subcontract or purchase order unless exempted by rules, regulations, or orders of the Secretary of Labor issues pursuant to Section 204 of Executive Order 11246 of September 24, 1965, so that such provisions will be binding upon each subcontractor or vendor. The Contractor will take such action with respect to any subcontract or purchase order as the contracting agency may direct as a means of enforcing such provisions including sanctions for non-compliance: Provided, however, that in the event the Contractor becomes involved in, or is threatened with, litigation with a subcontractor or vendor as a result of such direction by the contracting agency, the Contractor may request the United States to enter into such litigation to protect the interests of the United States.

1B.31 North Carolina Sales and Use Tax

(a) As used throughout this clause, the term "materials" means building materials, supplies, fixtures and equipment which become a part of or are annexed to any building or structure erected, altered, or repaired under this contract.

(b) If this is a fixed-price type contract as defined in the Armed Services Procurement Regulation, the contract price includes North Carolina sales and use taxes to be paid with respect to materials, notwithstanding any other provision of this contract. If this is a cost-reimbursement type contract as defined in such regulation, any North Carolina sales and use taxes paid by the Contractor with respect to materials shall constitute an allowable cost under this contract.

(c) At the time specified in paragraph (d) below:

(i) The Contractor shall furnish the Contracting Officer certified statements setting forth the cost of the materials purchased from each vendor and the amount of North Carolina sales and use taxes paid thereon. In the event the Contractor makes several purchases from the same vendor, such certified statement shall indicate the invoice numbers, the inclusive dates of the invoices, the total amount of the invoices and the North Carolina sales and use taxes paid thereon. Such statement shall also include the cost of any tangible personal property withdrawn from the Contractor's warehouse stock and the amount of North Carolina sales or use tax paid thereon by the Contractor. The Contractor shall furnish such additional information as the Commissioner of Revenue of the State of North Carolina may require to substantiate a refund claim for sales or use taxes.

(ii) The Contractor shall obtain and furnish to the Contracting Officer similar certified statements by its subcontractors.

(d) If this contract is completed before the next July 1, the certified statements to be furnished pursuant to paragraph (c) above shall be submitted within 60 days after completion. If this contract is not completed before the next July 1, such certified statements shall be submitted on or before the 31st day of August of each year and shall cover taxes paid during the twelve month period which ended the preceding June 30.

(e) The certified statements to be furnished pursuant to paragraph (c) above shall be in the following form:

I hereby certify that during the period _____ to _____, (name of Contractor or subcontractor) paid North Carolina sales and use taxes aggregating $_____ with respect to building materials, supplies, fixtures and equipment which have become a part of or annexed to a building or structure erected, altered or repaired by (name of Contractor) for the United States of America, and that the vendors from whom the property was purchased, the dates and numbers of the invoices covering the purchases, the total amount of the invoices of each vendor, the North Carolina sales and use taxes paid thereon, and the cost of property withdrawn from warehouse stock and North Carolina sales or use taxes paid thereon are as set forth in the attachments hereto.

1B. 32 Project identification signboard. A project identification signboard shall be provided. The signboard shall be 4 feet high by 8 feet long constructed at a conspicuous location on the job site where directed by the Officer in Charge. The field of the sign shall consist of one 4-foot by 8-foot sheet of grade B-B, medium density overlaid exterior plywood, not less than 1/2-inch thick. The signboard shall have a 2-inch by 2-inch frame applied to the face surface of the field and nailed from the back of the field with 6 penny galvanized nails. Corners of frame shall be mitered and nailed. A 3/4-inch quarter round shall be provided next to the 2-inch by 2-inch frame on the inner side and nailed with 6 penny finish nails, set and puttied. The completed signboard shall be secured to two 4-inch by 4-inch posts with 10 penny aluminum nails, 6 inches on centers, driven slightly recessed and puttied. The signboard shall be mounted with the bottom 4 feet, 6 inches above grade. The posts shall be set 3 feet into the ground and tamped tight. Each post shall extend to the top of the signboard and shall have a 2-inch by 4-inch diagonal brace nailed to the top of the post extending down to a 3 foot, 2-inch by 4-inch stake driven 2 feet, 6 inches into the ground. A 2-inch by 4-inch strut shall be provided from brace to brace midway from top to bottom, and nailed at each brace with three 10 penny nails. The posts shall be set 5 feet center to center. All lumber shall be B or Better Southern pine, pressure-preservative treated with pentachlorophenol. All nails shall be aluminum or galvanized steel. The entire signboard and supports shall be given one coat of exterior oil primer and two coats of exterior lead and oil paint. The lettering and sign work shall be performed by a skilled sign painter using paint known in the trade as bulletin colors. The 2-inch by 2-inch frame shall be painted black, the quarter round shall be painted gray, and the lettering shall be single stroke using bulletin blue. The lettering style shall be "Gothic", "Roman capitals", or "Thick and Thin" styles.

1B. 33 Certificate of current cost or pricing data. (This paragraph is to be used when certification of cost or pricing data is required in accordance with ASPR 3-807.3.) The Contractor shall submit to the Officer in Charge of Construction a certificate in the form set forth below as soon as practicable after agreement is reached on the contract price:

CERTIFICATE OF CURRENT COST OR PRICING DATA

This is to certify that, to the best of my knowledge and belief, cost or pricing data as defined in ASPR 3-807.3(e) submitted, either actually or by specific identification in writing (see ASPR 3-807.3(f)), to the Contracting Officer or his representative in support of _____ _____* are accurate, complete, and current as of _____**.
day month year

Firm_____
Name _____
Title_____

_____***
Date of Execution

_____

* Describe the proposal, quotation, request for price adjustment or other submission involved, giving appropriate identifying number (e.g., RFP No. ____).

** This date shall be the date when the price negotiations were concluded and the contract price was agreed to. The responsibility of the Contractor is not limited by the personal knowledge of the Contractor's negotiator if the Contractor had information reasonably available (see ASPR 3-807.5(a)) at the time of agreement, showing that the negotiated price is not based on accurate, complete, and current data.

*** This date should be as close as practicable to the date when the price negotiations were concluded and the contract price was agreed to.

SECTION IC. BIDS

IC.1 Instructions to Biddders, Standard Form 22, June 1964 edition and Invitation for Bids, Standard Form 20, January 1961 edition, shall be observed in the preparation of bids. Bidders shall affix their names and return addresses in the upper left corner of bid envelope. Envelopes containing bids must be sealed.

IC.2 Bid guaranty will be required as stipulated on the reverse side of Standard Form 20.

IC.3 Items of bids. Bids shall be submitted, in duplicate, on Standard Form 21, December 1965 edition, Bid Form, and in accordance with Standard Froms 20 and 22, upon the following items:

Item 1. (Base bid)

a. Price for the entire work, complete in accordance with the drawings and specifications, but excluding foundation piling and pile load tests and work described in Bid Items 2, 3, and 4.

b. Unit price per lineal foot for foundation piling complete in accordance with the drawings and specifications.

c. Price per pile load test complete in accordance with the drawings and specifications.

Item 2. Price for adding all work in connection with well No. 10, and raw water line No. 4, including piling therefor, complete in accordance with the drawings and specifications.

Notes: (a) The unit and lump sum prices for various items in the schedule above shall be deemed to include all costs required for the specified work, complete in accordance with the drawings and specifications, including all materials, labor, equipment, tools, supervision and related items. Where a well is included or excluded in an item, it is intended to include all work associated with that well, including well, house, site work, piping, electrical and power distribution.

If raw water line No. 4 is included, the 6 inch outlet of the tee at the site of well No. 9 shall be plugged.

(b) The low conforming bidder for Item 1 (Base Bid) will be determined by the lump sum bid under Item 1 (a) plus the unit prices bid under Items 1b and 1c multiplied by their respective estimated quantities. The estimated quantities of piling and load tests for Item 1. (Base Bid) are 25,524 linear feet of piling and 2 pile load tests.

(c) Additive or Deductive Items (APR. 1968)

The low bidder for purposes of award shall be the conforming responsible bidder offering the low aggregate amount for the first or base bid item, plus or minus (in the order of priority listed in the schedule) Those additive or deductive bid items providing the most features of the work within the funds determined by the Government to be available before bids are opened. If addition of another bid item in the listed order of priority would make the award exceed such funds for all bidders, it shall be skipped and the next subsequent additive bid item in a lower amount shall be added if award thereon can be made within such funds. For example, when the amount available is $100,000 and a bidder's base bid and four successive additives are $85,000, $10,000, $8,000, $6,000 and $4,000, the aggregate amount of the bid for purposes of award would be $99,000 for the base bid plus the first and fourther additives, the second and third additives being skipped because each of them would cause the aggregate bid to exceed $100,000. In any case all bids shall be evaluated on the basis of the same additive or deductive bid items, determined as above provided. The listed order of priority need be followed only for determing the low bidder. After determination of the low bidder as stated, award in the best interests of the Government may be made to him on his base bid and any combination of his additive or deductive bid for which funds are determined to be available at the time of the award, provided that award on such combination of bid items does not exceed the amount offered by any other conforming responsible bidder for the same combination of bid items.

(d) The successful bidder shall promptly upon request and before award submit for approval his preliminary quality control plan. Award will not be made until the Contractor's preliminary control plan has been approved.

1C.4 Telegraphic modifications of bids in accordance with Standard Form 22 may be made. Two signed copies of the telegram in a sealed envelope marked "Copies of Telegraphic modification of bid for Water Treatment Plant, Wells, and Distribution System, Marine Corps Base, Camp Lejeune, North Carolina. Specification No. 05-70-0939" should be forwarded immediately to the office to which the written bids were submitted.

IC.5 Reference to addenda. Each bidder shall refer in his to all addenda to this specification; failure to do so may constitute an informality in the bid.

NOTICE

The Government forms, Bureau of Yards and Docks/NAVFAC standard specification mentioned, and other information necessary may be obtained from the Commander, Atlantic Division, Naval Facilities Engineering Command, Naval Station, Norfolk, Virginia 23511. The remainder of the standard specifications and other material referred to may be examined at that office, or the standard Government specifications may be obtained from the Commanding Officer, Naval Publications and Forms Center, 5801 Tabor Avenue, Philadelphia, Pennsylvania 19120; requests for copies of specifications should indicate the contract for which required.

Atlantic Division, Naval Facilities Engineering Command
Naval Station, Norfolk, Virginia 23511
June 1, 1970

P. E. SEUFER, RADM, CEC, USN
Officer in Charge of Construction

SECTION 1D. CONTRACTOR QUALITY CONTROL

1D.1 This contract will be administered under Clauses 37 and 38 of the Additional General Provisions, NAVFAC 4-4330/5 (Rev. 1-70). The Contractor shall provide the general and specific quality controls required to obtain the quality level established by the requirements set forth in the specifications and drawings. The Contractor shall perform all quality control inspection or testing or both as required by this Contract, regardless of any statement to the contrary included in any of the referenced specifications, unless specifically designated in the project specification to be performed by the Government. All costs incidental to the Contractor's quality control and testing program shall be borne by the Contractor.

1D.2 All submittals, shop drawings and catalog cuts shall be certified by the Contractor as conforming to the drawings and specifications. Three copies of all submittals, shop drawings and catalog cuts, with the Contractor's certification indicated thereon, shall be furnished to the OICC for record purposes within one working day of the Contractor's approval and 14 days prior to installation. Clause 67 of NAVFAC 4-4330/5 (Rev. 1-70) applies only to those shop drawings requiring Government approval.

1D.3 Where testing by a testing laboratory is required in the project specification, the test results furnished to the OICC shall include the acceptable value for each specification requirement tested, the actual test results therefor and certification that the product does or does not conform to the specification requirements. All testing laboratories must be on the National Bureau of Standards approved list. Manufacturer's certified test reports will normally be acceptable for tests required in referenced specifications unless the tests are specified in the project specification to be performed.

1D.4 The Contractor's quality control organization is the means by which he assures himself that his construction complies with the requirements of the contract plans and specifications. The Contractor's job superintendent will not be permitted to act as the Contractor's representative responsible for quality control. The controls shall be adequate to cover all construction operations, including both on-site and off-site fabrication and will be keyed to the proposed construction sequence and shall include as a minimum at least three phases of inspection for all definable items or segments of work, as follows:

1D.4.1 Preparatory Inspection. To be performed prior to beginning any work on any definable segment of work. To include a review of contract requirements; a check to assure that all materials and equipment have been submitted and approved; a check to assure that provisions have been made to provide required control testing; examination of the work area to ascertain that all preliminary work has been completed; and a physical examination of materials and equipment to assure that they conform to approved shop drawings or submittal data and that all materials or equipment are on hand. As a part of this preparatory work, Contractor's Quality Control organization will review all shop drawings, certificates, and other submittal data prior to submission to the Contracting Officer.

1D.4.2 Initial Inspection. To be performed as soon as a representative segment of the particular item of work has been accomplished and to include examination of the quality of workmanship and a review of control testing for compliance with contract requirements, use of defective or damaged materials, omissions, and dimensional requirements.

1D.4.3 Follow-Up Inspections. To be performed daily or as frequently as necessary to assure continuing compliance with contract requirements, including control testing, until completion of the particular segment of work.

1D.5 DAILY RECORDS: The Contractor's Quality Control Inspectors shall maintain a daily record of all inspections and tests performed for each shift of contractor or subcontractor operations on an appropriate approved format. These records shall not only identify the project but shall include data on weather conditions, the contractor or subcontractors working and their respective areas of responsibility. In addition, these records shall provide factual evidence that continuous quality control inspections and tests have been performed, including but not limited to the following: type and number of inspections or tests involved; results of inspections or tests; nature of defects; causes for rejections; proposed remedial action; and corrective actions taken. These records shall cover both conforming and defective items and shall include a statement that all supplies and materials incorporated in the work, are in full compliance with the terms of the contract. The contractor shall maintain a current record of all inspections and shall furnish to the OICC/ROICC, on a daily basis, a legible copy of all inspection records for his permanent retention. The daily records of inspections shall cover all work placement subsequent to the previous report, and shall be verified by the contractor's designated representative. A sample of a minimum construction quality control report form is attached.

---oOo---

Sample format of typical contractor quality control report:

CONTRACTOR'S NAME
(Address)

CONSTRUCTION QUALITY CONTROL REPORT

Date:_____ Report No. _____

Contract No.:_____

Description and Location of Work: _____

WEATHER: (Clear) (P. Cloudy) (Cloudy); Temperature ___ Min,___Max;

Rainfall_____inches

Contractor/Subcontractor and Area of Responsibility

a._____
b._____
c._____
d._____
e._____
f._____
g._____

1. Work Performed Today: (Indicate locations and description of work performed. Refer to work performed by prime and/or subcontractors by letter in table above.)

_____

2. Results of Surveillance: (Include satisfactory work completed, or deficiencies with action to be taken.)

_____

3. Tests Required by Plans or Specifications Performed and Results of Tests:

_____

4. Verbal Instructions Received: (List any instructions given by government personnel on construction deficiencies, retesting required, etc., with action to be taken.)

---

5. Remarks: (Cover any conflicts in plans, specifications, or instructions.)

Inspector

CONTRACTOR'S CERTIFICATION: The above report is complete and correct and all material and equipment used and work performed during this reporting period are in compliance with the contract plans and specifications, except as noted above.

Contractor's Approved Authorized Representative

DIVISION 2 SITE WORK

SECTION 2A Earthwork
2B Storm Drainage
2C Crushed Stone Base Construction
2D Asphalt Concrete Pavement
2E Trackwork
2F Fencing (Security)
2G Establishing Vegetation
2H. Treated Timber Piling
2I Pavement removal and Replacement

SECTION 2A EARTHWORK

2A.1 Scope. The work includes the clearing and the excavation, filling, backfilling, and grading indicated and necessary for the proper completion of the project.

2A.2 Applicable publications. The following publications of the issues listed below, but referred to elsewhere by basic designation only, form a part of this specification to the extent indicated by the references thereto (where a number is suffixed to the specification number, it denotes the effective amendment to the specification):

(a) Bureau of Yards and Docks/NAVFAC Specifications.

42Yc Drainage, sanitary, electrical, and water service appurtenances.

(b) Non-Government Specifications and Standards

American Association of State Highway Officials (AASHO)

T99-61 Moisture density relations of soils, 5.5 lb. rammer.
T147-54 Field determination of density of soil in place.

2A.3 Requirements.

2A.3.1 General. Bids shall be based on the following:

(a) That the surface elevations are as indicated;
(b) That no pipes or other artificial obstructions, except those indicated, will be encountered; and
(c) that hard material will not be encountered.

In case the actual conditions differ substantially from those stated or shown, or both, the provisions of the contract respecting an adjustment for changed conditions shall apply, subject to the requirements of notification

thereunder being given. Hard material shall be defined as solid ledge rock, firmly cemented unstratified masses or conglomerate deposits possessing the characteristics of solid rock not ordinarily removed without systematic drilling and blasting, and any boulder, masonry, or concrete except pavement, exceeding 1/2 cubic yard in volume.

2A.3.2 Clearing. All trees, logs, shrubs, and brush within the indicated clearing limits shall be removed, except as indicated otherwise. Trees and shrubs which are not to be cut shall be properly protected from damage. Bushes, roots and matted roots shall be grubbed out at least 18 inches below the existing surface. Brush, refuse, stumps, roots, and timber shall be removed from the limits of the station.

2A.3.3 Topsoil. Material from the excavations and grading which in the opinion of the Officer in Charge, is suitable for topsoil shall be deposited in piles separate from other excavated material. Topsoil shall be free of stones, wood matter, cuttings, excessive quantities of vegetation, and debris of every kind. Piles of topsoil shall be located so that the material can be used readily for finished surface grading; topsoil shall be protected and maintained until needed. The top 4 inch thickness of all newly graded earth surfaced areas shall consist of topsoil. Topsoil required in excess of that available from excavations and grading shall be provided by the Contractor from sources off the station, and shall conform to the requirements of topsoil in the section entitled "Establishing Vegetation". Any surplus of topsoil from excavations and grading shall be stockpiled on the station at a location within 5000 feet of the site of the work, as directed.

2A.3.4 Excavations shall be carried to the depths, contours, and dimensions indicated as necessary. Excavations shall be kept free from water while construction therein is in progress.

(a) Excavations for structures and trenches. Excavations carried below the depths indicated, without specific directions shall be refilled to the proper grade with suitable material and compacted thoroughly, except that in excavations for footings the concrete shall be extended to the bottom of the excavations; all additional work of this nature shall be at the Contractor's expense. Trenches for pipe lines shall be excavated along straight lines and, unless indicated otherwise, shall provide a minimum of 6 inches between the outside of the pipe bell and the sides of the trench or bracing. Standard pipe trench excavation and bedding shall be in accordance with specification 42Y. Mechanical excavation, other than in rock, shall be held at least 2 inches above final invert grade. The remainder of the excavation shall be shaped manually and graded to provide uniform bearing on compacted soil, immediately before the pipe is laid.

(b) Excavations under new pavements and concrete slabs. The entire area of the original ground under new pavements, and concrete slabs shall be excavated to remove all vegetable matter, topsoil, sod, muck, rubbish, and other unsuitable material to a minimum depth of 6 inches. In the event that it is required to remove unsuitable material to a greater depth than specified, an adjustment in the contract price will be made in accordance with the contract.

(c) Shoring and Sheeting. Excavations shall be shored and sheeted with members of sizes and arrangement sufficient to prevent injury to persons, damage to structures, injurious caving, or erosion, shoring, sheeting and bracing shall be removed as the excavations are backfilled, care shall be exercised to prevent injurious caving during the removal of the shoring and sheeting.

2A.3.5 Borrow materials shall be obtained from the station borrow pit located within a hual distance of 5 miles from the site of the work. The contractor, at his expense, shall perform any clearing, grubbing and stripping required for providing access to suitable borrow materials and shall dispose of materials from clearing and grubbing operations as specified hereinbefore. The borrow pit shall be trimmed neatly and graded to drain properly.

2A.3.6 Filling and backfilling.

(a) Filling and backfilling for structures and trenches. All fill and backfill shall be free from roots, wood or other scrap materials, and other vegetable matter and refuse. Fill and backfill shall be placed in layers not more than 6 inches thick, except as specified otherwise herein, and each layers shall be compacted thoroughly and evenly. Backfill about structures shall be placed, as far as practicable, as the work of construction progresses. Backfilling of trenches shall progress as rapidly as the construction and testing of the work permits. In backfilling pipe trenches, approved fill shall be compacted in 6 inch layers to a depth of one foot over the top of the pipe; the remainder of the trench shall be backfilled in well compacted one foot layers, except that in pavements the backfill shall be placed in 6 inch layers to the top of the trench.

2A.3.7 Compaction. The subgrade of soils in cut shall have a density to a depth of 12 inches below the subgrade surface. If the density of the existing material is less than 95 percent, it shall be compacted to a depth of 12 inches to the minimum 95 percent density. Fill and backfill under concrete floor slabs and the upper 12 inches under pavements shall be compacted to not less than 100 percent of the maximum density for cohesionless materials, and 95 percent of the maximum density for other materials; under grassed areas to 85 percent; and other backfill adjacent to structures to

90 percent. The moisture content of the specified densities shall be within 2 percent more or less than the optimum.

2A.3.8 Grading. The Contractor shall perform all grading in the areas so indicated or specified. Surfaces which are to receive topsoil shall be depressed as required to receive the topsoil. Fill shall be brought to finished grades indicated within a tolerance of one tenth of a foot and shall be graded to drain away from structures. Existing grades which are to remain and which are disturbed by the Contractor's operations shall be graded to provide surfaces suitable for the proper use of mowing machines.

2A.3.9 Granular fill under concrete floor slabs shall consist of clean crushed rock, crushed or uncrushed gravel, uniformly graded and of a size that will pass a 1-1/2 inch sieve and will be retained on a No. 4 sieve. The barrier shall be constructed in layers not exceeding 4 inches in compacted thickness, and each layer shall be compacted with a minimum of two passes of a hand operated plate type vibratory compactor.

2A.3.10 Disposition of surplus material. Surplus material not required for filling, backfilling, or grading and other spoil material shall be wasted by deposition within one (1) miles of the site of the work, as directed. Wasted material shall be spread and leveled as directed.

2A.3.11 Gravel fill around reservoir shall consist of clean crushed rock, crushed or uncrushed gravel, uniformly graded and of a size that will pass a 2-1/2" sieve and will be retained on a 1/2" sieve. The gravel fill shall be constructed in layers not exceeding 12 inches in compacted thickness. Each layer shall be compacted with one pass of a hand operated plate type vibratory compactor.

2A.4 Quality Control. Provisions of Section entitled "Contractor Quality Control" shall apply.

2A.4.1 Laboratory and field density tests shall be made by the Contractor's quality control organization.

(a) Laboratory density tests shall be performed in accordance with Method D, AASHO method T99, with the following modifications; (1) all material passing a 2-inch sieve and retained on a 3/4-inch sieve shall be removed and replaced with an equal portion of material between the no. 4 and 3/4-inch sieves, and (2) a separate batch of material shall be used for each compaction test specimen. No material shall be reused for compaction tests. At least one test representing each type of material to be compacted shall be performed.

(b) Field density tests shall be performed in accordance with AASHO method T147. At least one test representing each 4000 square yards in each lift of fill or backfill material, with a minimum of two tests per lift.

SECTION 2B STORM DRAINAGE

2B.1 General requirements. The work includes the provision of storm drainage and culvert pipe systems, including all appurtenances. Except where cast iron pipe or arch type pipe is indicated on the drawings, pipe shall be either concrete, asbestos cement, or corrugated iron or steel pipe at the option of the Contractor. Materials and installation shall conform to the requirements specified in specification 56Y, as modified or amplified herein.

2B.2 Applicable publications. The following publications of the issues listed below, but referred to elsewhere by basic designation only, form a part of this specification to the extent indicated by the references thereto (where a number is suffixed to the specification number, it denotes the effective amendment to the specification):

(a) Bureau of Yards and Docks/NAVFAC specifications.

42Yc Drainage, sanitary, electrical, and water service appurtenances.

56Y Exterior sanitary sewer and drainage system piping.

(b) Federal and Military Specifications.

SS-S-168(2) Sealing compound, sewer, bituminous, two component, mineral filled, cold applied.
SS-S-00169a Sealer; joint, sewer, mineral-filled, hot-poured.
WW-P-401d Pipe and pipe fittings, cast iron, soil.
WW-P-405a Pipe, corrugated (iron or steel, zinc-coated.)

(c) Non-Government Specifications and Standards.

American Society for Testing and Materials (ASTM)

C14-65 Concrete sewer, storm drain, and culvert pipe.
C76-65T Reinforced concrete culvert, storm drain and sewer pipe
C443-65 Joints for circular concrete sewer and culvert pipe, using flexible, watertight, rubber-type gaskets.

American Association of State Highway Officials (AASHO)

M217-661 Asbestos cement pipe for culverts and storms drains.

North Carolina State Highway Commission (NCSHC)

"Standard Specifications for Roads and Structures", dated April 1, 1959 (Rev. January 1, 1965)
"Roadway Standards", current edition.

2B.3 Pipe.

2B.3.1 Concrete pipe.

(a) Non-reinforced concrete pipe shall be extra strength concrete pipe conforming to ASTM Specification C14.

(b) Reinforced concrete pipe shall conform to ASTM Specificatio C76, Class III, except that pipe passing under railroad tracks for a distance of 10 feet on each side of the centerline and the two 30 inch culverts under Brewster Boulevard at the railroad shall be Class IV.

2B.3.2 Corrugated iron or steel pipe shall conform to specification WW-P-405, Class I or II, Shape I, Type A coating and half paved. Minimum gage of metal, before any coating, shall be 14 for sizes smaller than 36 inches and 12 for 36 inches and larger.

2B.3.3 Cast iron pipe shall be Class SV cast iron pipe conforming to specification WW-P-401.

2B.3.4 Asbestos cement pipe shall conform to AASHO specification M217, Type II. Pipe sizes 14 inch and 20 inch may be used where sizes 15 inch and 21 inch, respectively, are indicated. Pipe classes shall be 1500, except that pipe passing under railroad tracks for a distance of 10 feet on each side of the cneterline shall be Class 2400.

2B.4 Laying Pipe. Provide batterboards spaced not more than 26 feet apart along the trench for checking installation of pipe to insure proper slope and elevation. Pipe shall be graded carefully and shall be supported firmly and uniformly at its proper elevation. For pipe 20 inches in diameter and larger, the bottom of the trench shall be shaped to fit the lower 1/4 of the circumference of the pipe. Each pipe shall be laid true to line and grade and in such manner as to form a close concentric joint with the adjoining pipe and prevent sudden offsets of the flow line. As the work progresses, the interior of the pipe shall be cleaned of dirt and superfluous materials of every description. Trenches for mortar-jointed pipe shall be kept free from water until the mortar has set, and no pipe shall be laid when the condition of the trench or the weather is unsuitable for such work. Open ends of the pipe shall be kept securely closed when work thereon is not in progress.

2B.5 Pipe joints.

2B.5.1 Concrete pipe shall have joints made with single rubber ring gaskets, gaskets and bituminous sealer, or shall be diaper type joints. Joint sealer for bituminous joints shall conform to specification SS-S-168 or to specification SS-S-169, Type I, Class I. Single rubber ring gaskets for joints in concrete pipe shall conform to ASTM Specification C443.

2B.5.2 Corrugated metal pipe shall have watertight joints. In lieu of the watertight joints specified in specification 56Y, the watertight joints may be made as specified herein.

(a) Watertight joints in corrugated metal pipe may be made with coupling bands and rubber gaskets. Gaskets shall be made of 3/8 inch thick by 7 inch minimum width closed cell, expanded synthetic rubber fabricated in the form of a cylinder with a diameter approximately 10 percent less than the nominal pipe size. Gasket material shall conform to ASTM Specification D1056, Grade SCE-43L. Coupling bands may be one or two pieces and of the angle lug, rod and lug, of U bolt type and shall be bituminous coated as specified for the pipe. The exterior rivet heads in the longitudinal seam under the coupling band shall be countersunk, ot the rivets shall be omitted and the seam welded.

(1) Installation of gaskets shall be in accordance with the recommendations of the gasket manufacturer in regard to the use of lubricants and cements and other psecial installation requirements. The gasket shall be placed over one end of a section of pipe for half the width of the gasket; the other half being doubled over the end of the same pipe. When the adjoining section of pipe is in place, the doubled over half of the gasket shall then be rolled over the adjoining section. Any unevenness in overlap shall be corrected so that the gasket covers the ends of the pipe sections equally. Connecting bands shall then be centered over the adjoining sections of pipe, and rods or bolts placed in position and nuts tightened. The band shall be tightened evenly, even tension being kept on the rod or bolts, and the gasket shall be closely observed to see that it is seating properly in the corrugations. Watertight joints shall remain uncovered for a period of time directed, and before being covered, the tightness of the nuts shall be measured with a torque wrench. If the nut has had a tendency to loosen its grip on the bolts or rods, the nut shall be retightened with a torque wrench and shall remain uncovered until a tight permanent joint is assured.

2B.5.3 Joints in asbestos cement pipe shall be for watertight service.

2B.6 Catch basins, manholes, headwalls, and inlets shall be constructed in accordance with specification 42Y. The plate numbers shall be as indicated on the drawings. Cleanouts shall be constructed of cast iron soil pipe and fittings.

2B.6.1 Flared ends shall conform to the NCSHC "Standard Specifications for Roads and Structures" and "Roadway Standards". Material used shall be the same as that used for the pipe.

2B.7 Quality Control. Provisions of Section entitled "Contractor Quality Control" shall apply.

2B.7.1 Quality assurance provisions shall be in accordance with specification 56Y. Leakage test is required. Tests shall be performed by the Contractor's quality control organization.

2B.7.2 Materials, tests and test reports. The testing requirements incorporated in referenced documents for materials will be waived, provided certified copies of reports of tests from approved laboratories performed on previously manufactured materials are submitted and approved. Test reports shall be accompanied by notarized certificates from the manufacturer certifying that the previously tested material is of the same type, quality, and manufacture as that furnished for the project

---oOo---

SECTION 2C. CRUSHED STONE BASE CONSTRUCTION

2C.1 Applicable publications. The following publications of the issues listed below, but referred to elsewhere by basic designation only, form a part of this specification to the extent indicated by the references thereto (where a number is suffixed to the specification number, it denotes the effective amendment to the specification):

(a) Federal Standards.

Federal Standard No. 210. Road and Paving Materials; Methods of sampling and testing.

(b) Non-Government Specifications and Standards.

American Society for Testing and Materials (ASTM)

D694-62 Crushed stone, crushed slag, and crushed gravel for dry-bound or water-bound macadam base courses.

2C.2 General requirements. The work includes construction of a crushed stone base course and stone drives on previously prepared subgrade.

2C.3 Stone base Construction.

2C.3.1 Material shall be crushed stone conforming to ASTM specification D694, with a Los Angeles abrasion not exceeding 55. Gradation shall be as follows (Achievement of the gradation may be by pugmill or other approved methods):

SIEVE DESIGNATION	PERCENTAGE BY WEIGHT PASSING
1-1/2 inch	100
1 inch	80-95
1/2 inch	60-75
No. 4	40-55
No. 10	28-43
No. 40	15-27
No. 200	5-12

2C.3.2 Spreading. The materials shall be spread uniformly on the subgrade from piles adjacent to the area or from a dumping board, or by approved mechanical means, to a thickness such that when compacted it will have a completed thickness not less than indicated. The material shall be so handled that it will not segregate and all material which has segregated shall be replaced with properly graded material. The material shall not be spread on a wet subgrade. Spreading of material more than an average day's work in advance of rolling and finishing will not be permitted.

2C.3.3 Compacting. The material shall be placed and compacted and shall be rolled longitudinally, diagonally, and transversely with a three wheel roller weighing not less than 10 tons. Rolling shall start at

the edges and proceed parallel to the sides and towards the center, uniformly lapping each preceding track not less than the width of one rear wheel of the roller until the entire area has been completed. Rolling shall then proceed diagonally at an angle of approximately 45 degrees with the initial rolling and transversely overlapping of each successive trip as specified above, and continuing until the aggregate does not creep or wave ahead of the roller, and until the entire course is compacted to a density of at least 100 percent of maximum density at optimum moisture content determined as specified in the section entitled "Earthwork". If at any time the subgrade material becomes churned up or mixed with the base course material, the contractor shall, without additional compensation, dig out and remove the mixture, reshape and compact the subgrade, and replace the materials removed with clean material which shall be rolled until compacted satisfactorily. The entire surface, after compaction, shall be smooth and true to grade, and the base shall conform to the cross section indicated. The surface may be sprinkled during the rolling process, if necessary, until each entire course is well bound and firmly set. The quantity of water used shall be sufficient to produce a packed granular surface.

2C.4 Quality Control. Provisions of Section entitled "Contractor Quality Control" shall apply.

2C.4.1 Sampling and testing, except as specified otherwise, shall be in accordance with Standard FED-STD-210. All samples of aggregates shall be submitted to the Contractor's quality control representative for testing thereby. The materials sources shall be selected well in advance of the time when the materials will be required in the work. Preliminary approval of material from pits shall not be construed to mean that all material in the deposit will be acceptable. Additional samples of the aggregates shall be furnished during construction, upon request.

2C.4.2 Tests. All tests shall be performed by the Contractor's quality control organization.

(a) Smoothness tests. Upon the completion of the rolling and filling, the surface of the base shall be tested with an approved 10 foot straightedge to detect all variances and irregularities. All irregularities in excess of 1/4 inch shall be corrected by loosening the surface and removing or adding stone as may be necessary, after which the entire areas shall be rolled, refilled, sprinkled with water, and the rolling continued until compacted thoroughly. Corrected areas shall be true to grade and cross section.

(b) Thickness test. The thickness of the base course shall be measured at intervals such that there will be a depth measurement for at least each 500 square yards of completed base course. The depth measurements shall be made by test holes, at least 3 inches in diameter, through the base course. Where the base course deficiency is more than 1/2 inch, such areas shall be corrected by scarifying, adding mixture of proper gradation, reblading, and recompacting. Where the measured thickness is more than 1/2 inch thicker than shown, it will be considered as the indicated or specified thickness plus 1/2 inch for determining the average. The average thickness shall be the average of the depth measurements and shall not underrun the thickness shown by more than 1/4 inch.

(c) Density tests. At least one laboratory test for the project and at least one field test for each 1000 square yards or fraction thereof shall be performed to check compliance with the base course density requirements.

2C.4.3 Materials, tests and test reports. The testing requirements incorporated in referenced documents for materials will be waived, provided certified copies of reports of tests from approved laboratories performed on previously manufactured materials are submitted and approved. Test reports shall be accompanied by notarized certificates from the manufacturer certifying that the previously tested material is of the same type, quality, and manufacture as that furnished for the project.

SECTION 2D ASPHALT CONCRETE PAVEMENT

2D.1 Applicable publications. The following publications of the issues listed below, but referred to elsewhere by basic designation only, form a part of this specification to the extent indicated by the references thereto (where a number is suffixed to the specification number, it denotes the effective amendment to the specification):

(a) Federal and Military Specifications and Standards.

SS-A-671c Asphalt, liquid; slow curing, medium curing, and rapid curing.
SS-A-706b(1) Asphalt, (for use in) road and pavement construction.
SS-S-71a Sand, for use in sheet asphalt or bituminous concrete pavements.

(b) Non Government Specifications and Standards.

American Association of State Highway Officials (AASHO)

M17-42 Mineral filler for sheet asphalt and bituminous concrete pavements.
M78-64 Crushed stone and crushed slag for bituminous macadam surface course.
M156-65 Bituminous mixing plants for hot mixed, hot laid bituminous paving mixtures.
T11-60 Material passing no. 200 sieve in aggregate.
T96-65 Abrasion of coarse aggregate by use of the Los Angeles Machine.

North Carolina State Highway Commission (NCSHC)

Standard specifications for roads and structures, dated April 1, 1959 (revised January 1, 1965).

2D.2 General Requirements. The work includes the construction of a prime coat and bituminous concrete surface course. Preparation of the subgrade shall be as specified in the section entitled "Earthwork". Except as otherwise specified herein or indicated on the drawings, all work and materials shall be in accordance with the NCSHC "Standard Specifications for Roads and Structures". Aggregates for the bituminous mix shall be crushed stone.

2D.3 Base course. Shall conform to Section "Crushed Stone Base Construction".

2D.4 Prime coat shall be cut back asphalt, Grade MC-70 conforming to specification SS-A-671. The prime coat shall be allowed to cure for a period of at least 48 hours prior to placing the surface material. The prime coat shall be applied only when the surfaces to be treated are dry and the atmosphereic temperature is at least 50 degrees Fahrenheit. The treated surfaces shall be maintained and protected from damage until the bituminous

paving material is placed. Any surface glaze on the base course shall be removed by approved methods just prior to application of the prime coat.

2D.4.1 Rate of application shall be 0.35 gallon per square yard.

2D.5 Asphaltic concrete surface course.

2D.5.1 Materials. The fine aggregate shall conform to the requirements of specification SS-S-71, except that percent wear as determined by the Los Angles Test, AASHO T96, shall not exceed 55, and shall be of the gradation set forth in paragraph E-1a of that specification. The coarse aggregate shall be crushed stone, size 3/8 inch to No. 8, conforming to AASHO Specification M78, except that percent wear as determined by the Los Angeles Test, AASHO T96, shall not exceed 55. The asphaltic cement shall be Type AP-3, specification SS-A-706. Mineral filler shall conform to AASHO Designation M17.

2D.5.2 Composition of mixture. The aggregate and bituminous material shall be combined in such proportions as to produce a mixture conforming to the following composition limits by weight:

SIEVE DESIGNATION	TOTAL PER CENT PASSING
1/2 inch	100
3/8 inch	-
No. 4	55-75
No. 10	40-60
No. 40	15-35
No. 80	8-20
No. 200	4-8
Bitumen	4.5 - 7.5

The amount of material finer than No. 200 sieve in the blended aggregate (exclusive of added mineral filler) before drying shall not exceed 8.0 percent, and shall be determined by AASHO Method T11 using a detergent (sodium hexametaphosphate buffered with sodium carbonate).

2D.5.3 Formula for job mix. Before staring any work, the formula including mixing temperature shall be submitted and approved by the Officer in Charge. The submission shall include a certified laboratory analyis of mix composition and the Marshall test value obtained therefrom for stability, void content, and flow. After the job mix formula is established and approved, all mixtures furnished shall conform thereto within the following ranges of tolerances:

Asphalt cement	plus or minus 0.4 of 1 percent
Material retained on the No. 4 and larger sieves	plus or minus 7 percent
Material retained on the No. 10 and smaller sieves	plus or minus 4 percent

Material passing the No. 200 sieve	plus or minus 2 percent
Temperature of the mix	plus or minus 20 degrees Fahrenheit

The mix shall produce the following values as established by Marshall Method of Test Criteria:

Stability	1200 pound (minimum)
Void content - percent of total mix	3-8
Flow - hundredth of an inch	9-16

2D.5.4 Mixing plant shall conform to the requirements of AASHO Designation M156.

2D.5.5 Construction.

(a) Placing temperature. Mixtures which have a temperature of less than 225 degrees Fahrenheit when dumped into the spreader will be rejected.

(b) Joints. Where new pavement abuts existing flexible pavement, the existing surfacing course shall be cut back along uniform lines approximately six inches from the edge. The cut shall be made vertically and extend the full depth of the surfacing course. Prior to placing the surfacing course, the exposed edge of all cold joints shall be painted with a thin layer of asphalt cement.

(c) The spreading and finishing equipment shall be capable of spreading the bituminous mixture to a uniform density and striking a smooth finish, true to cross section and free from inequalities. The screed shall be adjustable to shape the surface to true cross section.

(d) Compaction. Compacting equipment shall include a 10-12 ton, three wheeled roller, a self propelled pneumatic tire roller and a tandem roller. The first rolling shall be done with the three wheeled roller, followed by the self propelled pneumatic tire roller and the final rolling shall be done with the tandem roller.

(e) Placing of the surface course shall be as nearly continuous as possible. The roller shall pass over the unprotected end of the mixture only when leaving is discontinued for sufficient time to permit the mixture to cool, in which case a joint shall be made by cutting back the surface course to expose a granular surface for its full depth to bond with the fresh mixture. When laying is resumed, the exposed edge shall be coated with hot asphalt cement and the fresh mixture raked against the joint, thoroughly tamped with hot tamps and rolled. The surface course shall be compacted to a density of at least 96 percent of that obtained in the laboratory specimen.

(f) Bituminous materials or mixtures shall not be produced or placed when the weather is rainy or foggy, when the base course is frozen or shows any evidence of excess moisture, or when the air temperature is less than 40 degrees Fahrenheit in the shade away from artificial heat.

(g) Finished surfaces shall be uniform in texture and appearance and free from cracks and creases.

2D.5.6 Protection of pavement. After final rolling, no vehicular traffic of any kind shall be permitted on the pavement until it has cooled and hardened and in no case in less than six hours.

2D.6 Quality Control. Provisions of the Section entitled "Contractor Quality Control" shall apply.

2D.6.1 Tests: All tests to determine conformance with the specified requirements shall be performed by the Contractor's quality control organization. The following minimum number of tests shall be performed to insure compliance with the requirements for thickness, compaction, and job-mix:

(a) Thickness of asphalt concrete surface course - One test for each 500 square yards or fraction thereof.

(b) Density of asphalt concrete surface course - one field test for each 1000 square yards or fraction thereof.

(c) Asphalt concrete job-mix - one test for each 400 tons or fraction thereof to determine gradation and bitumen content.

2D.6.2 Materials, tests and test reports. The testing requirements incorporated in referenced documents for materials will be waived, provided certified copies of reports of tests from approved laboratories performed on previously manufactured materials are submitted and approved. Test reports shall be accompanied by notarized certificates from the manufacturer certifying that the previously tested material is of the same type, quality, and manufacture as that furnished for the project.

---oOo---

SECTION 2E. TRACKWORK

2E.1 Applicable publications. The following publications of the issues listed below, but referred to elsewhere by basic designation only, form a part of this specification to the extent indicated by the references thereto (where a number is suffixed to the specification numer, it denotes the effective amendment to the specifications):

(a) Federal and Military Specifications.

MM-T-371d Tie, railroad, wood (cross and switch)
TT-W-0057Ih(I) Wood preservation: Treating practices.
MIL-R-3518B Rails, tee, railway.
MIL-J-12368B(I) Joint bar, rail.
Mil-T-12270A(I) Tie plates, railway

(b) Non Government Specifications and Standards.

American Railway Engineering Association (AREA)

Trackwork Plans and specifications
Manual of Recommended Practice

2E.2 General Requirements. The work under this section includes provision of the trackwork indicated and connection to existing trackwork, complete and ready to receive traffic. New rails, rail clips, rail stops, expansion jioints, ties, ballasts. joint bars, tie plates, bolts and nuts, spring washers, spikes, turnouts including switches, frogs, guard rails, compromise joints, plates, braces, clamps, filler rails, fastenings, switch stands and rods, bumping posts, and other work and materials shall be provided as specified or required to complete the installation in accordance with current AREA standards. All materials shall be new and unused, except where existing material is specifically indicated or specified to be reused.

2E.3 Track material. Track materials shall conform to the following:

2E.3.1 Ties. Ties shall conform to the requirements of specification MM-T-371 for Types I and II. Type I, cross ties, shall be form A, 8 feet 6 inches long, 7 inches thick and 9 inches wide. Type II, switch ties, shall be form A, 7 inches thick and 9 inches wide, thd of the lengths shown and as necessary. Except where otherwise required, switch ties shall be of the lengths shown on AREA plan No. 912-58. Pine ties shall not be used. All ties shall be pressure treated with coal tar creosote in accordance with specification TT-W-571. Retention of creosote per cubic foot shall be not less than 8 pounds. All empty spike or bolt holes shall be filled by driving creosoted wooden plugs into the holes. Cross ties removed from existing track shall be the property of the Government and shall be stored on the reservation where directed by the Officer in Charge.

2E.3.2 Rail. Rail shall be new carbon steel conforming to AREA specifications for open=hearth steel rails and specification MIL-R-3518. Rail shall be 90-pound ARA-A, 33 feet or 39 feet long. Rail shall be drilled for four hole splice bars. Closure pieces shall not be less than 12 feet in length.

2E.3.3 Turnouts. A complete turnout shall consist of track material and switch ties in accordance with AREA trackwork plan 8-62, sheets 1 and 2. The turnout shall be for use with standard rail section 90 pound ARA-A 115 pound AREA with four hole joint drilling. Switch operating material is not included. Frogs and guard rail required in the complete turnout or separately shall be open hearth steel and shall be in accordance with AREA trackwork plan no. 323-55 for bolted, rigid frogs, and plan no. 504-55 for tee rail guard rails.

2E.3.4 Joint bars. Joint bars shall be head bearing, long toe, for 90 pound rail and shall be in accordance with specification MIL-J-12368. They shall be of a pattern suitable for the intended use and approved by the Officer in Charge.

2E.3.5 Track bolts. Track bolts shall be manufactured of quenched carbon steel or alloy steel and shall conform in all respects to the requirements of the applicable AREA Specifications. The nut and bolt assembly shall include a lock nut of the spring washer type.

2E.3.6 Track spikes. Track spikes shall be manufactured of soft steel and shall conform in all respects to the requirements of the applicable AREA specifications. They shall have minimum dimensions of 9/16 inch under the head.

2E.3.7 Tie plates. Tie plates shall conform to all respects to the requirements of the applicable AREA specifications and to specification MIL-T-12270. Plates shall be 7-1/2 inches by 10 inches for 90 pound rail.

2E.3.8 Compromise joints. Compromise joints conforming to applicable AREA specifications shall be furnished and installed for changes in rail size.

2E.3.9 Stone ballast. Ballast shall be clean, hard, broken granite or limestone, graded uniformly from 3/4 inch to 2-1/2 inches in size. Ballast shall conform to the requirements of applicable AREA specification for specific gravity, toughness, wear, and soundness.

2E.3.10 Switch stand shall be provided and shall be the low model, adjustable type, complete with target, self locking connecting rod, reversible target tip, double arm crank, throwing lever, latch and interchangeable parts.

2E.4 Track construction.

2E.4.1 Road bed. The road bed shall be prepared well in advance of track laying; and surface grade and drainage shall be approved by the Officer in Charge prior to any distribution over the finished road bed. The Contractor shall use equipment which will not form ruts or water pockets. All such depressions shall be filled and compacted prior to track laying.

2E.4.2 Unloading material. In unloading material, ties shall be so handled as to avoid splitting or bruising. The use of picks in the handling and placing of ties will not be permitted. Rails shall be unloaded from cars by cranes, or by sliding them down a skidway composed of two rails, guiding them by means of a rope at each end of each end rail to prevent damage.

2E.4.3 Ties: Ties shall be spaced 18 to 33 foot rail length and 21 to 39 foot rail length. Ties shall be laid normal to the centerline of the track with the wide heartwood face down. When it is impossible to determine the position of the heartwood, they shall be laid with the widest surface down. The best ties shall be used at the rail joints, spaced as near 18 inches on center as possibel consistent with the type of joints bars used. Ties should be moved only with tongs to minimize any damage incident to handling. Moving and placing ties with picks, spike mauls sledges, or shovels will not be permitted. The ends of ties on one side of the track shall be parallel to the rail in such position that the center of the tie will be on the approximate centerline of the track. The ends shall be lined on the inside of curves and continued on this side until reaching a curve in the opposite direction. The top surface of ties shall provide full bearing for the rail or tie plate. Adzing shall be restricted to that necessary to provide a sound and true bearing.

2E.4.4 Rail. The base of therail and the surface of the tie or tie plate shall be cleaned of all foreign material prior to laying. Rail shall be laid without bumping or striking, to the standard 4 foot, 8-1/2 inch gauge. The gauge shall be set normal to the rails, care being taken that the lug of the gauge does not come into contact with the shoulder of the joint fastening. Track shall be gauged as spikes are driven home at joints, centers, and quarters. The joints shall not vary more than 2 feet from the center of the joints in opposite rail or tangents, or more than 4 feet on curves over 6 degrees. Rails of less than standard length shall be used to properly space the joints or curves. NO joints shall be less than 3 feet from switch points. Proper allowance for expansion shall be provided at rail joints by installing rail expansion shims of wood or metal. Shims shall conform to the section of the rail bieng used and shall be of the thickness shown in the following table:

Temperature of rail Degrees F.	Shim thickness in inches for 33 foot rail	for 39 foot rail
0-25	3/16	1/4
26-50	1/8	3/16
51-75	1/8	1/8
76-100	1/16	1/16
over 100	0	0

When necessary to cut rail, the cut shall be made only with a rail saw or track chisel. When new holes are necessary they shall be drilled. Holes punched, slotted, or cut with a torch will not be accepted.

2E.4.5 Tie plates. Tie plates shall be placed so that the rail will have full bearing on the plate and the plate will have full bearing on the tie. Tie plates shall be set at right angles to the rail with the shoulder set firmly against the base of the rail.

2E.4.6 Joint bars. Joint bars shall be cleaned of all foreign material, well oiled, and properly installed with the full number and correct size of bolts, nuts and spring washers. Bolts shall be placed with nuts alternately on inside and outside of rail and shall be drawn tight before spiking After the track has been put into service and the before acceptance of the work, all bolts shall be checked and tightened. Rails of different section shall be connected by properly fitted compromise joints.

2E.4.7 Spiking. Rail shall be fully spiked promptly after laying. Spikes shall be set vertically and driven with faces in contact with the base of rail to full bearing on the rail base. On tangents, 4 spikes shall be used on each tie; and on curves, 6 spikes: 1 on the outside and 2 on the inside of each rail. Spikes shall be staggered so that the outside spikes in each tie will be near the same edge of that tie, and the inside spikes near the opposite edge with the position of spikes the same on all ties.

2E.4.8 Turnout. Turnout shall be furnished and installed as shown. They shall be laid out, fitted, and secured in accordance with AREA Standards and requirements of applicable AREA specifications.

2E.4.9 Ballast distribution. Ballast may be distributed either from automotive equipment or railroad cars. Care shall be taken when distributing ballast from automotive equipment, to avoid ruts that will form water pockets which will prevent proper roadway drainage. Ballast distributed from railroad cars may be unloaded and spread by having one or more hoppers open and allowing the proper quantity of material to flow as the car is moving slowly ahead. The unloaded material may be leveled by a spreader, or by means of a tie or timber across the track in front of the car wheels just behind the open hopper.

2E.4.10 Preliminary surfacing. The preliminary aligning and surfacing gangs shall follow the unloading as closely as the regularity of the ballast supply will permit. After the track has been aligned, it shall be brought to grade and surface in lifts as required to use up the ballast distributed by the preceding dumping operation, but not exceeding 6 inches. After each lift, the ballast shall be tamped sufficiently to prevent damage to rails by the operating equipment in use. When jacks are used, they shall be placed on the outside of the rail, close enough together, with one jack in the crib ahead of the joint, to prevent undue bending or strain of rail and joint. Both rails shall be railed uniformly except where superelevation is required, in which case the outer rail shall be raised to the elevation indicated on the

drawings. All ties pulled loose shall be spiked securely in their proper position with full bearing on the tie plate or tie. The ballast shall be thoroughly tamped under each tie with pick, shovel, tamping bar, or tamping machine, from each end of both sides of the tie to a point 15 inches inside each rail. The remaining center portion shall be carefully filled and shovel tamped. The ballast shall be thoroughly tamped under switch ties throughout their length.

2E.4.11 Final surfacing. After preliminary surfacing has been completed, and preferably after several days under traffic, grade and line stakes shall be checked, and the track shall be checked, and the track shall be carefully aligned. All sections of track found not holding up to proper surface shall be jacked up to the exact location of the grade stakes, and the ballast shall be dressed to the section shown on the drawings, and the shoulders brought to line and surface. Covering ballast with sand or other fine grained material will not be permitted.

2E.4.12 Bumping post shall be constructed of structural steel shapes and plates as indicated on the drawings. Bumping posts shall be designed to carry impact from the coupler to track and earth. Post shall weigh a minimum of 800 pounds.

2E.4.13 Timber construction in paved areas shall be constructed as indicated. Bituminous pavement when required shall conform to applicable portions of specifications. The timber may be hardwood or Southern Pine. Southern Pine shall conform to Federal Specifications MM-L-00751. The timber shall be creosote treated in accordance with requirements of Federal Specification TT-W-00571.

2E.5 Quality Control. Provisions of the Section entitled "Contractor Quality Control" shall apply.

2E.5.1 Materials, tests and test reports. The testing requirements incorporated in referenced documents for materials will be waived, provided certified copies of reports of tests from approved laboratories performed on previously manufactured materials are submitted and approved. Test reports shall be accompanied by notarized certificates from the manufacturer certifying that the previo tested material is of the same type, quality, and manufacture as that furnished for the project.

---o0o---

SECTION 2F FENCING (SECURITY)

2F.1 General requirements. The work includes the provision of new fencing, complete with all appurtenances required to complete the installation, including gates, integral gate locks, stretcher bars, clips, footings posts, rails, fencing and other accessories. Chain link fencing and accessories shall conform to the applicable requirements of specification 62Y, except as otherwise specified herein.

2F.2 Applicable publications. The following publications of the issues listed below, but referred to elsewhere by basic designation only, form a part of this specification to the extent indicated by the references thereto (where a number is suffixed to the specification number, it denotes the effective amendment to the specifications):

(a) Bureau of Yards and Docks/NAVFAC Specifications.

13Yh	Concrete construction, including addendum No. 1.
62Y	Chain link fencing.

(b) Federal and Military Specifications.

FF-P-101c(2)	Padlocks.
RR-F-00191e	Fencing, wire and post, metal (and gates, chain link fabric, and accessories).

2F.3 Materials. As far as practical, accessories for fencing shall be of the same material as the fabric, unless specified otherwise.

2F.3.1 Chain link fabric shall be Class 1, Class 3, or Class 5, 0.192 inch wire diameter, 2 inch wire mesh in accordance with specification RR-F-00191. Zinc coated fabric shall have 1.2 ounces of zinc per square foot of uncoated wire surface. Aluminum coated fabric shall have 0.40 ounces of aluminum alloy per square foot of uncoated wire surface. Fabric shall have both selvage edges twisted and barbed. Height of the fence fabric shall be 72 inches.

2F.3.2 Fence posts, barbed wire, and accessories shall conform to specification RR-F-00191. All posts, rails and bracing shall be round or "H" or "I" or square sections of equal or greater strength. Material used shall be of the same shape. Top rails shall be provided with all fencing.

(a) Gates shall be of the swing type. Swing type shall be erected to operate from closed to open through an arc of 180 degrees. Latches for single gates shall be either a forked type or a plunger bar type. Latches for double gates shall be either a combination or forked type latch with center drop rod or a plunger bar type of full gate height arranged to engage the gate stop or a positive locking gravity device. Stops shall be anchored in concrete

footings. Gate frame ends shall have extension members or shall be extended above the frame sufficiently to accommodate barbed wire.

(b) Padlocks. Gates shall be equipped with padlocks, all keyed alike, conforming to specification FF-P-101, Type EPC, Size 1-1/2 inches.

(c) Barbed wire shall be provided as 3 strands. Barbed wire extension arms, Style 18, shall be provided at each post. Sufficient bolts, rivets, or drive screws shall be used to securely anchor extension arms to posts.

(d) Post tops shall be provided for all terminal and intermediate posts. Sufficient bolts, rivets, or drive screws shall be used to securely anchor post tops to posts.

2F.4 Fence construction. Installation shall be in accordance with specification 62Y, as modified herein. Concrete for footings shall be Class D-1.0 in accordance with specification 13Y. Pull posts shall be provided at 200 foot intervals in straight runs of fencing exceeding 200 feet. Fabric shall be fastened to top rails at 15 inch maximum intervals with tie wires or wire clips. Fabric shall be fastened to reinforcing wires at 15 inch maximum intervals with hog rings.

2F.5 Quality Control. Provisions of Section entitled "Contractor Quality Control" shall apply.

2F.5.1 Materials, tests and test reports. The testing requirements incorporated in referenced documents for materials will be waived, provided certified copies of reports of tests from approved laboratories performed on previously manufactured materials are submitted and approved. Test reports shall be accompanied by notarized certificates from the manufacturer certifying that the previously tested material is of the same type, quality, and manufacturer as that furnished for this project.

2F.6 Security. Construction and maintenance of new security fencing and removal of existing security fencing and related work shall be provided and scheduled to provide continuous security for the using activity and shall be fully coordinated with the cognizant Security Officer.

---oOo---

SECTION 2G ESTABLISHING VEGETATION

2G.1 General requirements. The work includes seedbed preparation liming, fertilizing, seeding and mulching of all areas indicated to be vegetated. The work also includes those areas inside or outside the limits of construction that are disturbed by the contractor's operations.

2G.2 Materials.

2G.2.1 Lime shall be dolomitic agricultural ground limestone containing not less than 10 percent magnesium oxide.

2G.2.2 Fertilizer shall be the standard commercial product of 10-10-10 analysis. All fertilizer shall be delivered in bags bearing the manufacturer's name, the chemical analysis of the product, and its weight. If not used immediately after delivery, fertilizer shall be stored in a manner that will not allow it to harden or destroy its effectiveness.

2G.2.3 Seed shall be certified seed or equivalent based on North Carolina Seed Improvement Association requirements for certification. If the seed is not grown in the state where it is to be used, it shall meet the certification requirements of the Seed Improvement Association for the State in which it is grown. All seed shall be furnished in sealed standard containers unless exception is granted the Officer in Charge. Seed which has become wet, moldy, or otherwise damaged prior to seeding, will not be acceptable.

2G.2.4 Mulch shall be any of the materials noted below:

(a) Grain straw or dry hay. Mulch material which contains an excessive quantity of matured seed of noxious week or other species which would hinder the establishmentof desirable vegetation will not be acceptable. Any mulch material which is fresh or excessively brittle or which is in an advanced stage of decomposition as to smother or retard growth of grass will not be acceptable.

(1) Asphaltic adhesive. Asphaltic material to anchor straw mulch shall be thin enough to be blown from spray equipment. It shall be SS-1 emulsion or RS liquid asphalt 1 or 2.

(b) Wood cellulose fiber mulch. Wood cellulose fiber mulch for use with the hydraulic application of grass seed and fertilizer shall consist of specially prepared wood cellulose fiber. It shall be processed in such a manner that it will contain no growth or germination inhibiting factors and shall be dyed an appropriate color to facilitate metering of materials. It shall be manufactured in such a manner that after addition and agitation in slurry tanks with fertilizers, grass seeds, water, and any other approved additives, the fibers in the material will become uniformly

suspended to form a homogeneous slurry; that when hydraulically sprayed on the ground, the material will form a blotterlike ground cover impregnated uniformly with grass seed; which after application, will allow the absorption of moisture and allow rainfall or mechanical watering to percolate to the underlying soil. Suppliers shall be prepared to certify that laboratory and field testing of their product has been accomplished and that it meets all of the foregoing requirements based upon such testing. Weight specifications of this material from suppliers, and for all applications shall refer only to air dry weight of the fiber material. Absolute air dry weight is based on the normal weight standard of the Technical Association of the Pulp and Paper Industry for wood cellulose and is considered equivalent to 10 percent moisture. Each package of the cellulose fiber shall be marked by the manufacturer to show the air dry weight content.

2G.2.5 Topsoil to be provided by the Contractor shall be from approved sources. The topsoil shall be natural, friable sandy loam or fine sandy loam, possessing the characteristics of producing heavy growths of agricultural crops and shall be obtained from naturally well-drained areas. The topsoil shall be reasonably free from subsoil, clay lumps, brush, stumps, objectionable weeds, other litter, and any other material or substance which might be harmful to plant growth or a hindrance to grading planting, or maintenance operations. The topsoils proposed for use shall be inspected and approved by the Officer in Charge at its natural location prior to its being moved to the construction site. At the time of inspection, the Officer in Charge may required representative soil samples to be taken from several locations of the areas under consideration and tested physical properties, pH, available phosphate and potash and organic matter. If such tests are required, they shall be at the Contractor's expense.

2G.3 Special seeding, and mulching equipment.

2G.3.1 Seeder. Equipment to be used for applying a seed-fertilizer mix over prepared slopes shall be a hydraulic seeder designed to pump a water seed fertilizer mixture over areas to be seeded at the specified rates. A power driven agitator keeps the mixture uniform during the seeding cycle.

2G.3.2 Mulch spreader. Equipment to be used for spreading mulch shall be equipment designed to apply an asphalt adhesive to the straw mulch material at the end of a movable boom, then with a high velocity air stream, blow the asphalt sprayed straw over the graded areas to form a uniform porous, stable blanket, tied in place by the asphalt adhesive.

2G.3.3 Wood cellulose fiber mulch spreader. Hydraulic equipment used for the application of fertilizer, seed, and slurry or prepared wood pulp shall have a built in agitation system with an operating capacity sufficient to agitate, suspend, and homogeneously mix a slurry containing

up to 40 pounds of fiber plus a combined total of 70 pounds of fertilizer solids for each 100 gallons of water. The slurry distribution lines shall be large enough to prevent stoppage. The discharge line shall be equipped with a set of hydraulic spray nozzles which will provide even distribution of the slurry on the various slopes to be seeded. The slurry tank shall have a minimum capacity of 1000 gallons and shall be mounted on a traveling unit which may be either self propelled or drawn with a separate unit which will place the slurry tank and spray nozzles within sufficient proximity to the areas to be seeded so as to provide uniform distribution without waste. The Officer in Charge may authorize equipment with smaller tank capacity provided that the equipment has the necessary agitation system and sufficient pump capacity to spray the slurry in a uniform coat.

2G.4 Quality Control. Provisions of the section entitled "Contractor Quality Control" shall apply.

2G.4.1 Seed. The Officer in Charge shall be furnished with duplicate signed copies of a statement from the vendor, certifying that each container of seed is fully labeled in accordance with the Seed Improvement Association requirements for certification. This certification shall appear on, or with, all copies of invoices for the seed. Each lot of seed will be subject to sampling and testing at the discretion of the Officer in Charge. Sampling and testing shall be in accordance with the latest regulation under the Federal Seed Act.

2G.4.2 Fertilizer and lime. The Officer in Charge shall be furnished with duplicate copies of invoices for all fertilizer and lime used on the project. Invoices for fertilizer shall show the analysis and the quantity furnished. Invoices for lime shall show the percentage of magnesium oxide and quantity furnished. Upon completion of the project, a final check of the total quantities of fertilizer and lime used will be made against the total area seeded and if the rates of application have not been met, the Officer in Charge may require the distribution of additional quantities of these materials to make up the application specified.

2G.4.3 Mulch. At least 5 days prior to the initiation of the seeding work, the Contractor shall furnish representative samples of the materials proposed to be used for approval.

2G.4.4 Asphalt adhesives. The Contractor shall demonstrate before starting the work that the application of asphalt will be made at the specified rates and that method of application is satisfactory. The Contractor shall furnish copies of manufacturer's specifications for asphalt adhesives.

2G.4.5 Quality assurance provisions.

(a) Materials, tests and test reports. The testing requirements incorporated in referenced documents for materials will be waived, provided certified copies of reports of tests from approved laboratories performed on previously manufactured materials are submitted and approved. Test reports shall be accompanied by notarized certificates from the manufacturer certifying that the previously tested material is of the same type, quality, and manufacture as that furnished for the project.

2G.5 Seedbed preparation. Equipment necessary for the proper preparation of the seedbed and for handling and placing of all required materials shall be on hand, in good condition and shall be approved before the work is started. The Officer in Charge may require the Contractor to demonstrate that the equipment will apply the various materials at the specified rates.

2G.5.1 Clearing. Prior to or during grading and tillage operations, the ground surface shall be cleared of stumps, stones, roots, cable, wire, grade stakes, and other materials that might hinder proper grading, tillage, seeding, or subsequent maintenance operations.

2G.5.2 Gradings. Grades on the area to be treated shall be maintained in a true and even condition. Maintenance shall include any necessary repairs to previously graded areas.

2G.5.3 Tillage. All graded areas shall be thoroughly tilled to a depth of at least 4 inches by plowing, disking, harrowing, or other approved methods until the condition of the soil is acceptable. On sites where soil conditions are such that high clay content and excessive compaction cause difficulty in geting clods and lumps effectively pulverized, the Contractor shall use the rotary tillage machinery, until the mixing of the soil is acceptable to the Officer in Charge and no clods or clumps remain larger than 1-1/2 inches in diameter. A firm and compact seedbed is required, and after being graded, the seedbed shall be lightly compacted with a land roller, such as a cultipacker, before and after seeding. All tillage operations shall be as near on the contour as is practical but in no instance up and down the slope.

2G.5.4 Topsoiling. The topsoil shall be uniformly distributed on the designated areas and evenly spread to an average thickness of 4 inches, with a minimum thickness of 3 inches. Prior to placing the topsoil, the subgrade, wherever excessively compacted by traffic or other causes, shall be loosened by disking or by scarifying to a depth of at least 2 inches, to permit bonding to the subgrade. The spreading shall be performed in such a manner that planting can proceed with little additional soil preparation or tillage. Any irregularities in the surface resulting from topsoiling or other operations shall be corrected in order to prevent the formation of depressions where water will stand. Topsoil shall not be placed when the subgrade is frozen, excessively wet, extremely dry, or in a condition otherwise detrimental to the proposed planting or to proper grading.

2G.6 Liming. Limestone shall be uniformly applied at the rate of 4000 pounds per acre (93 pounds per 1000 square feet) to all areas to be vegetated. Limestone may be applied to the area prior to the preparation of the seedbed, but in all cases, it shall be applied before seeding and thoroughly incorporated into the entire depth of the prepared seedbed. The incorporation of the lime may form a part of the tillage operation specified above.

2G.7 Fertilizing. The fertilizer shall be uniformly applied at the rate of 1200 pounds per acre (27 pounds per 1000 square feet) to all areas to be vegetated. The fertilizer shall be incorporated into the upper three or four inches of prepared seedbed. This can be done just prior to the last tillage operation or just prior to seeding, but in no case, will it be applied more than 3 days before seeding or before the lime is applied. Distribution by means of an approved seed drill equipped to sow seed and distribute fertilizer at the same time will be acceptable. When hydroseeding equipment is used for planting operation, fertilizer shall be applied simultaneously with seed using the above rate of application.

2G.8 Seeding. The Contractor shall make use of special hydroseeding equipment or approved mechanical power drawn seeders. When conditions are such, by reason of draught, high winds, excessive moisture, or other factors that satisfactory results are not likely to be obtained, the work shall be stopped by the Officer in Charge and resumed only when directed. If inspection during seeding operation, or after there is a show of green, indicates that strips wider than the space between the rows planted have been left, or other areas skipped, the Officer in Charge may require the Contractor to sow additional seed on these areas. Seed shall be sown between 15 March and 1 May or between 1 September and 15 October. Spring seeding shall be at the rate of 120 pounds per acre of the following seed mixture:

Variety	Pounds
Ky - 31 Fescue	100
Common Bermuda (hulled)	20

Fall seeding shall be at the rate of 120 pounds per acre of the following seed mixture:

Variety	Pounds
Ky - 31 Fescue	100
Common Bermuda (unhulled)	20

Note: The variety of seeds indicated shall be sown only during the optimum periods specified.

2G.8.1 Broadcast seeding. Seed shall be sown with an approved hydroseeder in combination with fertilizer, or in combination with wood cellulose fiber mulch and fertilizer. Rate of seeding shall be the same as that specified in the table under drill seeding. The seed shall be uniformly distributed over the designated areas. In areas too confined for the operation of machinery, hand operated equipment, such as the "Cyclone" seeder, shall be employed. The seed shall be uniformly distributed over the designated areas. Half the seed shall be sown with the sower moving in one direction, and the remainder shall be sown with the sower moving at right angles to the first sowing. IN confined areas, the seed shall be covered to the depths specified in the table for drill seeding by means of rakes or other approved hand tools. Broadcast seeding shall not be done during windy weather.

2G.8.2 Mechanical power drawn seeder. Seeding shall be accomplished with a combination grass planter and land packer or pulverizer. The seed shall be planted no deeper than 1/4 inch. The seeding operation should be as near on the contour as is practical, but never up and down the slope. After seeding, the seeded area shall be compacted with a land roller, such as a cultipacker. (It will be permissible to sow the seed and cultipack the soil all in one operation if the proper equipment is used.)

2G.9 Mulching. The surface of all seeded areas shall be protected by the application of any of the before mentioned mulch material unless otherwise specified.

2G.9.1 Straw or hay shall be applied evenly over the seeded area in such a manner that thickness of the mulch is approximately uniform through out the treated area and sunlight is not completely excluded from penetration to the ground surface. The straw mulch shall be applied at the rate of one and one half tons per acre.

2G.9.2 Wood cellulose fiber mulch. The application of the wood cellulose fiber mulch shall be with the hydroseeder and shall be accomplished immediately after completion of the final tillage operation. The wood cellulose fiber mulch shall be applied at the rate of 1,000 pounds per acre in combination with water, fertilizer and seed and shall be sprayed over the soil in a uniform coat.

2G.10 Anchoring mulch. Straw or hay mulch shall be anchored in placed as follows:

(a) By uniformly spraying the straw with the hereinbefore specified asphalt material at the rate of 0.10 gallons per square yard.

@G.11 Protection. The area shall be protected against foot and vehicular traffic by erecting adequate barricades immediately after seeding is completed, and by placing warning signs of a type approved by the Officer in Charge.

2G.12 Establishment. The Contractor shall be responsible for the proper care of the seeded area during the period when the vegetation is being established. In the event of an erosive rain before an adequate stand of vegetation is established, the Officer in Charge will require that damaged areas be repaired, limed, fertilized, seeded, and mulched wholly at the Contractor's expense. This period shall extend for 30 days after the completion of the mulching.

2G.13 Postponement of seeding. If upon substantial completion of the finish grading, the seeding or landscaping cannot be completed during the specified periods, then the seeding and landscaping shall be accomplished during the next seeding period specified. Only an amount considered sufficient by the Officer in Charge to cover payment for this work will be withheld from the progress payments. The beneficial occupancy of the facility shall not be delayed by the postponement of the seeding and landscaping.

---o0o---

SECTION 2H TREATED TIMBER PILING

2H.1 Applicable publications. The following publications of the issues listed below, but referred to elsewhere by basic designation only, form a part of this specification to the extent indicated by the references thereto (where a number is suffixed to the specification number, it denotes the effective amendement to the specification):

(a) Federal and Military Specifications.

MM-P-371b Pile, wood.

(b) Non Government Specifications and Standards.

American Wood Preservers Association (AWPA)

Book of Standards

American Society for Testing and Materials (ASTM)

D1143-61T Load settlement relationship for individual piles under vertical axial load

2H.2 General requirements. Piles shall be Class A or B, yellow pine or Douglas fir, Type II treated in accordance with specification MM-P-371. They shall be given a preservative treatment with coal tar creosote by the pressure process. The retention of creosote per cubic foot of wood shall be not less than 12 pounds for yellow pine and 10 pounds for Douglas fir. The creosote and the preservative treatment shall be in accordance with the current edition of the AWPA "Book of Standards". Where the cut off elevation for piles is below existing grade, and excavation for foundation or other construction is required at the location of the piles, the excavation shall be made before the piles are driven.

2H.3 Inspection. The Contractor shall notify the Officer in Charge at least two weeks prior to beginning the treatment, stating the place where creosoting will be done. The Government inspector shall have access to all parts of the plant and every facility shall be allowed him for the inspection of the creosoting.

2H.4 Precautions in handling and driving creosoted piles. Care shall be taken in handling and in driving to prevent damage to the shell of creosoted wood and every effort shall be made to prevent damage to piles, particularly in portions which will be exposed to attack by wood destroying insects or decay. Piles will be inspected in the leads and, where the protective shell of creosoted wood is impaired between cut off and a point which will be not less than 10 feet below ground surface, the piles shall be repaired by approved methods, unless the pile is damaged to such an extent that it is rejected. In general, all holes in the portion of the pile subject to exposure shall be plugged neatly and tightly with creosoted wood. Abrasions or other damage which cannot be repaired with plugs shall be given a surface treatment as specified hereinafter for cut surfaces.

2H.5 Lengths and numbers of piles, Bids shall be based on providing 644 piles including test piles, totalling 25,716 linear feet and on the assumed pile lengths as set forth in the Table below for standard job piles and of length specified in paragraph entitled "Test Piles" for special test piles measured from point to cut off elevation.

Table: Pile lengths (includes test piles)

Raw Water Line

8 piles at 24 feet each

Treatment Plant

80 piles at 39 feet each
108 piles at 44 feet each
18 piles at 49 feet each

Reservoir

430 piles at 39 feet each

The Officer in Charge will determine from the results of test pile driving and loading the minimum depth and minimum driving resistance required for job piles. From these requirements and from the data obtained as a result of the test pile driving and loading, the Contractor shall prepare a schedule of the number of piles of each length to be used and their location. This schedule shall be approved before any piles, except test piles are ordered. The Governmnent reserves the right to take up to 5 working days to establish minimum pile depths from the time test pile records and load test data, where specified, are in possession of the Officer in Charge. Piles for the raw water line shall be ordered 25 feet long and driven to the depth required to permit cut off at the elevation shown, with one foot allowed for cut off. The excess of length ordered over the point to cut off length listed in the schedule as finally approved shall be the responsibility of the Contractor. If, in driving, it is found that any pile is not of a length sufficient to give the bearing power specified, the Contractor shall follow one of the following methods --(1), (2), (3), or (4) -- as may be directed by the OICC:

(1) The pile shall be withdrawn, a section spliced onto the lower end of thepile as specified hereinafter, the length of the lower portion being as directed and the pile re-driven until therequired bearing power is obtained and the splice is blow permanent groundwater.

(2) An additional pile of the length directed shall be driven adjacent to the first pile;

(3) The first pile shall be pulled and a longer pile of the length directed driven.

(4) A pile section of the length directed, shall be spliced onto the butt as specified hereinafter, and driving continued.

2H.6 Test piles. 25 timber test piles conforming to the requirements for permanent piles shall be driven at the locations indicated and to the depths as follows:

Test pile no.	Tip to cut off length (feet)
Treatment Plant (12)	As shown on drawings
Reservoir (13)	39 feet

For each test pile, a record shall be kept of the number of blows required for each foot of penetration. The piles and pile driving shall conform to the requirements specified herein and, unless directed otherwise, driving shall be continuous until the full length of the pile has been driven to the cut off elevation indicated. Jetting of test piles will not be permitted. Test piles indicated or directed to be driven in permanent locations may be incorporated into the work if they are approved by the Officer in Charge after all testing has been completed. Two test piles selected by the Officer in Charge shall be load tested. Every facility shall be provided for the Officer in Charge to inspect and measure the deflection or settlement of a pile under test load. Furnishing and setting up of the measuring equipment and the loading of the test piles shall be the responsibility of the Contractor and conducting the test will be the responsibility of the Officer in Charge. The loading equipment shall be of sufficient capacity to apply a maximum load of not less than forty (40) tons. Test loading shall be in accordance with ASTM Method of Test D1143. Test piles to be load tested shall be loaded to two times the design working capacity of the pile. The ultimate test load shall be maintained for not less than 24 hours and then released. The safe design capacity of a test pile as determined from the results of load tests shall be the lesser of the two values computed according to the following:

(1) The load at which the plastic deformation is no greater than 0.01 inch of deflection per ton as determined from the load settlement curve.

(2) One half the load that causes a gross settlement of 1 inch provided the load settlement curve shows no sign of failure.

2H.7 Bearing power. The following formulae are presented only as a guide to aid in establishing the controlling penetration per blow which, together with the minimum depth of penetration established above will serve to determine the required depth of penetration of each individual pile:

$$R = \frac{2E}{S + 0.1\ P/W}$$ for double acting hammers;

$$R = \frac{2WH}{S + 0.1\ P/W}$$ for single acting hammers;

in which R is the approximate allowable pile load in pounrds; E equal the

energy in foot pounds per blow based on an acceptable certified statement from the manufacturer of the hammer; W equal the weight of the hammer or ram in pounds; H equals the fall of the hammer or ram in feet; P is the weight of the pile in pounds and when P is less than W, P/W shall be taken as unity; and S equals the average inches of penetration per blow for the last three blows. An allowance shall be made for reduced penetration caused by shock absorption of pile caps and by material penetrated which will be removed after the pile is driven. Water jets may be used in driving only when specifically authorized by the Officer in Charge and he may require their use where satisfactory penetration cannot be obtained otherwise. Where jetting is required, the jetting equipment shall be of a type and capacity approved by the Officer in Charge. All jetted piles shall be driven the last three feet of the required depth or penetration and the minimum number of blows per foot required by the Officer in Charge for normally driven piles must be attained. Prejetting of piles will not be permitted.

2H.8 Driving. Piles shall be driven with an approved diesel, air or steam hammer. The value of E shall be not less than 8,700 and not more than 20,000 foot pounds. Hammers for driving test piles and project piles shall be of the same type and rated capacity. In jetting a pile, the jetting shall be discontinued before the final bearing is reached and the pile shall be brought to final bearing with the hammer. All piles shall be spaced accurately and shall be driven plumb. Driving of each piles shall be continuous until minimum bearing is attained. They shall have the heads and points squared to the driving axis. A suitable iron ring or cap shall be used on the head during driving. All pile heads at cut off shall be entirely sound. All injured piles shall be replaced with sound piles or shall have the damaged parts repaired as directed; without additional cost to the Government.

2H.9 Pile splices may be permitted by the Officer in Charge and shall consist of steel pipe having a wall thickness of not less than 1/4 inch, a diameter approximating that of the pile at the plane of splicing but a minimum of 9 inches and a length of not less than 1.5 feet above and below the joint. Before the sleeves are driven on them, piles to be spliced shall be trimmed sufficiently to preclude the slivers or shavings cut by the sleeve being heavy enough to produce objectionable shakes or splintering. Full bearing of timber on timber shall beprovided and air pockets or cushions in the sleeves avoided.

2H.10 Surface treatment. After piles have been driven and cut, the butts and cut and dapped surfaces shall be given two heavy brush coats of coal-tar creosote, the first coat being allowed to penetrate before the second is applied and then coated with a mixture of creosote and coal tar pitch mixed to a paste consistency. Creosote shall be in accordance with the American Wood Preservers Association, "Book of Standards".

2H.11 Payment. Each pile and test pile acceptably provided will be paid for at the "applicable contract unit price" per linear foot, which price shall include all items incidental to furnishing and driving the piles

including mobilization, inspection and testing, jetting, and collars where necessary, redriving uplifted piles, cutting off of all piles at the "cut off" grade line, treatment of the pile head exclusive of any capping. Payment for piles driven in lengths as required up to and including bid lengths specified will be made at the basic contract unit price bid. Payment for piles driven in lengths as required, greater than the lengths specified will be made at an adjusted unit price. The adjusted unit price will be obtained by multiplying the basic contract unit price bid by the applicable factor shown in the table below. The unit price so adjusted will be the "applicable contract unit price" for the length of pile driven below cut off elevation.

Increase in length Over specified job pile length	Factor
Over 0.0 to 5.0 feet, inclusive	1.05
Over 5.0 to 10.0 feet, inclusive	1.10
Over 10.0 to 15.0 feet, inclusive	1.15
Over 15.0 to 20.0 feet, inclusive	1.30
Over 20.0 to 25.0 feet, inclusive	1.50

Payment will be made for that remaining length of pile not driven to the required minimum depth at the direction of the Officer in Charge at the rate of 60 percent of the basic contract unit price bid, and no other payment will be paid for such cut off. Piles required to be pulled at no fault of the Contractor will be paid for at the "applicable contract unit price" for furnishing and driving pile in its original position plus 50 percent of this amount to cover the cost of pulling. Such pulled piles when re-driven will be paid for at 50 percent of the "applicable contract unit price" for the length driven. Payment for each complete test loading of a single pile will be made at the contract unit price per test, which price shall include furnishing, placing, and removing testing equipment, and placing and removing test loads. Payment for splices directed to be made will be made in accordance with Clause 4 of Form No. 23A. The unit price provisions herein shall not apply for the piling at the new raw water line No. 4, and the total costs therefor shall be included in the lump sum bid for the water line.

2H.12 Quality Control. Provisions of Section entitled "Contractor Quality Control" shall apply.

2H.12.1 Materials, tests and test reports. The testing requirements incorporated in referenced documents for materials will be waived, provided certified copies of reports of tests from approved laboratories performed on previously manufactured materials are submitted and approved. Test reports shall be accompanied by notarized certificates from the manufacturer certifying that the previously tested material is of the same type, quality and manufacture as that furnished for the project.

2H.12.2 Pile records. Within one day after completion of the pile driving, a complete and accurate record of all piles installed shall be furnished to the OICC. The record shall indicate the pile location, diameter, length, the elevation of tips and butts of piles, pile hammer description, and the number of hammer blows per foot for the final three feet of penetration.

---oOo---

SECTION 21. PAVEMENT REMOVAL AND REPLACEMENT

21.1 Scope. The work includes the patching of all existing pavement which is cut or otherwise damaged by any work performed under this contract.

21.2 Applicable publications. The following publications of the issues listed below, but referred to elsewhere by basic designation only, form a part of this specification to the extent indicated by the references thereto (where a number is suffixed to the specification number, it denotes the effective amendment to the specification):

(a) Bureau of Yards and Docks/NAVFAC Specifications.

4Yg Portland Cement concrete pavement (except for airplane traffic).

13Yh Concrete construction; including addendum No. 1.

(b) Non-Government Specifications and Standards.

North Carolina State Highway Commission (NCSHC)

Standard specifications for roads and structures, dated April 1, 1959 (Rev. January 1, 1965)

21.3 General Requirements. Where trenches, pits or other excavations are made in existing roadways and other areas of pavement where surface treatment of any kind exists, such surface treatment or pavement shall be restored to the same thickness and to match and tie into the adjacent and surrounding existing surfaces in a neat and acceptable manner.

21.4 Pavement removal shall be accomplished with a straight line cut made 12 inches beyond the edge of the excavation to permit proper replacement. All edges of concrete to be removed not bounded by joints shall be scored along the breakline, using a saw to a depth of 1-1/2 inches, except where depth must be adjusted for reinforcement. Where reinforcing bars or mesh are encountered in existing concrete work they shall be cut through the center and bent back to provide work clearance. At cuts which are to become expansion joints and at locations where the broken edge of the concrete cannot be effectively concealed in the finished work, the break shall be ground smooth or the saw cut shall be made clear through the concrete. Removed pavement and debris and spoil material shall be removed from the limits of the station.

21.5 Backfilling and tamping of the disturbed area, prior to the establishment of the surface treatment, shall be in layers not to exceed six inches of loose depth, compacted to 90 percent of maximum density.

21.6 Bituminous. Except as otherwise specified all work shall be in accordance with the NCSHC Standard Specifications for Roads and Structures. The cut edge of bituminous pavement shall be painted with grade RC-250 cut

back asphalt or AP-3 asphalt cement to provide a good bond. Bituminous concrete shall be in accordance with the Section of this specification entitled "Asphalt Concrete Pavement". A crusher run stone base course six inches thick shall be provided. Maximum aggregate size in the base course shall be 2 inches. Prime coat consisting of MC-70 liquid asphalt shall be applied on the base course at the rate of 0.35 gallons per square yard.

21.7 Concrete. In restoring concrete pavement the existing reinforcing if in good condition or new reinforcing to match shall be installed. In either case continuity of reinforcing to match shall be restored with adequate laps on welding. Concrete pavements shall be in accordance with specification 4Y, Class E-2. Sidewalks, curbs and curb and gutter shall be Class E-1 concrete in accordance with specification 13Y. Joint patterns shall be maintained or replaced in the new work and at completion the repaired surfaces of all pavements shall be as inconspicuous as possible.

---o0o---

DIVISION 3. CONCRETE

SECTION 3A. CONCRETE CONSTRUCTION

3A.1 Applicable publications. The following publications of the issues listed below, but referred to elsewhere by basic designation only, for a part of this specification to the extent indicated by the references thereto (where a number is suffixed to the specification number, it denotes the effective amendment to the specification):

(a) Bureau of Yards and Docks/NAVFAC Specifications.

4Yg Portland cment concrete pavement (except for airplane traffic)

13Yh Concrete construction, including addendum No. 1.

(b) Federal Specifications.

SS-S-164(4) Sealer, hot poured type, for joints in concrete.

(c) Non Government specifications and standards

American Society for Testing and Materials (ASTM)

D1850-67 Concrete joint sealer, cold application type.

3A.2 General requirements. Materials, mixing, placing, finishing and curing of all concrete shall be in accordance with specification 13Y, except as indicated or modified herein. The work includes cast in place concrete construction.

3A.3 Class of Concrete.

3A.3.1 Contractor furnished mix design. A concrete mix design shall be furnished by the Contractor for each type of concrete used in the work. Slump shall be between 2 inches and 5 inches. The concrete shall have a 28 day compressive strength and maximum aggregate size as follows:

Table 1

Placement	Compressive strength	Max. aggregate size
Floor slabs	4000	1/2
Exterior slabs, slabs on grade	3000	1
Columns	4000	1
Walls and grade beams	4000	1
Walks and curbs	3000	1
Drainage structures	3000	1

Placement	Compressive Strength	Max. Aggregate Size
Manholes	3000	1
Pile caps, footings	3000	1-1/2
Reservoir complete	3000	1

3A.3.2 Air entrained concrete shall be provided for retaining walls, walks, exterior slabs, and all concrete exposed to the weather.

3A.4 Materials.

3A.4.1 Cement shall be type I for all concrete. Cement for exposed concrete surfaces shall be from the same mill.

3A.4.2 Aggregate for exposed concrete surfaces shall be from one source.

3A.4.3 Joint sealing materials shall conform to ASTM Specification D1850 or specification SS-S-164, except that all joints exposed to weather shall be sealed with the latter.

3A.4.4 Slots or inserts for masonry anchors.

(a) Dovetail anchor slots shall be formed of not lighter than 24 gage zinc coated sheet steel.

(b) Inserts shall be of not lighter than 9 gage wire, zinc-coated, and engaged between a two piece half round wood core, and having loops for embedding in concrete.

3A.4.5 Slots or inserts for acoustical ceiling suspension shall be of not lighter than 18 gage hot dipped galvanized metal with self locking inserts.

3A.4.6 Reinforcement.

(a) Reinforcing bars shall have a minimum yield strengh of 40,000 pounds per square inch.

(b) Welded wire fabric shall be 6 inch by 6 inch mesh, 6 gage and 4 inch by 4 inch, 10 gage.

3A.4.7 Waterstops. shall conform to specification 13Y as modified herein. Elastomer waterstops will be permitted, and shall conform to the following requirements when tested in accordance with the applicable ASTM test method: Elastomer waterstops shall be made of natural or synthetic rubber or polyvinyl chloride; shall be dense, homogeneous, free from porosity and other imperfections, and symmetrical in shape. Materials shall be resistant to chemical action with portland cement; acids and alkalies; and

not be affected by fungi. They shall show no effect when immersed for 10 days at room temperature in 10 percent solutions of sulphuric acid, hydrochloric acid, and sodium chloride; and a saturated lime solution. Resistance to fungi shall be demonstrated by a suitable test. Material shall not be adversely affected when subjected to tests for low temperature brittleness (-35 degrees Fahrenheit) and water absorption (maximum 5 percent by weight).

3A.5 Construction.

3A.5.1 Pits and trenches shall have the bottom slabs and walls keyed and bonded together properly and in an approved manner. Where practicable, the bottom slabs and walls shall be placed integrally. Slabs forming covers for pits and trenches shall have openings formed to suit the installation of equipment and apparatus.

3A.5.2 Setting miscellaneous material. Anchors and bolts; including but not limited to those for machine and equipment bases; frames or edgings; hangers and inserts; door bucks, pipe supports, pipe sleeves; pipes passing through walls; metal ties, conduits, drains, and all other materials in connection with concrete construction; shall where practicable, be placed and secured in position when the concrete is placed. Anchor bolts for machines shall be set to templates, shall be plumbed carefully and checked for location and elevation with an instrument, and shall be held in position rigidly to prevent displacement while the concrete is being placed.

3A.5.3 Future bonding. Exposed reinforcing bars left for future extension shall be intermediate grade steel; the exposed bars shall be coated with heavy grease and wrapped spirally with reinforced waterproof kraft paper, secured with wire ties, and coated with asphalt.

3A.5.4 Slots or inserts for masonry anchors.

(a) Dovetail anchor slots shall be provided in concrete faced with, or abutted, by masonry. Slots shall be set vertical, continuous for their full height and shall have a filler which will prevent entry of concrete and be readily removable after the forms are stripped. One slot shall be provided for each faced or abutted surface less than 18 inches wide, and at least two slots shall be provided for each faced surface 18 inches or more in width, but the spacing of the slots shall not exceed 24 inches except as otherwise indicated.

(b) Inserts may be provided in lieu of the dovetail anchor slots. The wood core shall be nailed to the forms at the time the concrete is placed and removed when the forms are stripped, exposing wire to which brick ties or anchors will be fastened.

3A.5.5 Slots on inserts for acoustical ceiling shall be located so not to impair the structural capacity of the member to which it is attached. Continuous slots may be used provided the slot is equal in strength to the displaced concrete area. Spacing of slots and inserts shall not exceed 48" except as otherwise indicated.

3A.5.6 Concrete pavement shall be in accordance with specification 4Y, as modified herein: thickness shall be as indicated.

3A.5.7 Concrete sidewalks shall be not less than 3-5/8 inches in thickness or as indicated. Concrete sidewalks shallhave contraction joints every 5 linear feet, cut to a depth of 3/4 inch with a jointing tool. Contraction joints shall be cut after the surface has been finished. Transverse expansion joints shall be installed at all returns, driveways, and opposite expansion joints in curbs. Where curbs are not adjacent, transverse expansion joints shall be installed at intervals of approximately 50 feet. Expansion joints shall be made with preformed joint material. Sidewalks shall receive a broomed finish. Edges of the sidewalks and joints shall be edged with a tool having a radius not greater than 1/8 inch. Sidewalks adjacent to curbs shall have a slope of 1/4 inch per foot towards the curb. Sidewalks not adjacent to curbs shall have a transverse slope of 1/4 inch per foot. The surface of the concrete shall show no variation in cross section in excess of 1/4 inch in 5 feet.

3A.5.8 Reinforcement steel shall be provided. Any placement or movement after placement other than indicated or specified shall be subject to approval of the designer.

3A.6 Finishes for floors and slabs. For floors in which drains occur, special care shall be exercised to slope the floors uniformly to the drains. In all areas where quarry tile are to be overlaid, the concrete base slab shall be depressed as indicated on the drawings to provide a finished floor at the same elevation as surrounding areas. All floor slabs where finish is not indicated or specified shall receive a single steel troweling. Dry cement shall not be placed directly upon the new concrete surface to absorb excess moisture.

(a) Float finishing shall be provided for concrete floors to receive ceramic and quarry tile.

(b) Steel trowel finishing shall be provided for floors receiving resilient tile to obtain a smooth troweled surface.

(c) Broomed finishing shall be provided for walks, steps, and platforms.

(d) Sealer hardener finish shall be provided for all interior exposed concrete floor slabs by the application of an approved liquid chemical curing compound.

3A.6.1 Surface finishes (except floors and slabs)

(a) Grout finish shall be provided for all concrete surfaces which receive paint or other finish.

(b) Rubbed finish shall be provided for exposed areas not being painted. These surfaces include the following areas: Reservoir walls, exposed filter walls, girders and columns not painted. Sides of landings, stairs, docks, canopies, exposed foundation walls and grade beams in treatment gallery, and pipe gallery.

3A.7 Vapor barrier shall be provided beneath the entire concrete floor slab of the building over the special compacted fill that is specified under another section. The material shall be placed in the greatest widths and

lengths practicable so as to eliminate joints wherever possible; where joints are necessary the material shall be lapped not less than 6 inches for the side and end laps and sealed with approved adhesive. Torn, punctured, or damaged vapor barrier material shall be removed and replaced as directed, prior to the placing of concrete. Concrete shall be placed in a manner to preclude damage to the vapor barrier material. Vapor barrier material shall be polyethlene sheeting of a nominal thickness of 0.006 inches.

3A.8 Quality Control. Provisions of section entitled "Contractor Quality Control" shall apply.

3A.8.1 Tests, sampling and inspections shall be performed in accordance with 13Y, except as modified hereinafter. All test, sampling and inspections shall be at the Contractor's expense, except that tests of cement in car load lots shall be performed by the Government through the facilities of the U.S. Army Corps of Engineers' Cement and Pozzolan Procurement Testing Service.

(a) Inspections. Requirement of 13Y for concrete being proportioned, mixed and placed only in the presence of the Government inspector shall not apply; however, such work shall be performed only in the presence of the Contractor's Quality Control representative.

(b) Tests. Tests shall be performed in accordance with 13Y, except that all tests except on cement shall be performed at the Contractor's expense. Tests shall be performed by a testing laboratory on the National Bureau of Standards approved list.

(1) Concrete testing. Test cylinders shall be cast in accordance with the requirements of specification 13Y. Not more than 10 percent of the cylinders tested shall have compressive strengths less than that specified for concrete. If test results of any concrete to be used in the project fall below the aforementioned limits, the Contractor shall make all necessary adjustments in proportioning and curing at the Contractor's expense. Concrete which at the end of 60 days does not meet the specified strength shall be removed or otherwise corrected, at the Contractor's expense.

(2) Testing of materials other than concrete. The testing requirements incorporated in referenced documents will be waived, provided certified copies of reports of test from approved laboratories performed on previously manufactured materials are submitted and approved. Test reports shall be accompanied by notarized certificates from the manufacturer certifying that the previously tested material is of the same type, quality, manufacture, and make as that furnished for this project.

---o0o---

DIVISION 4. MASONRY

SECTION 4A. BRICK AND CONCRETE MASONRY UNIT WORK.

4A.1 Applicable publications. The following publications of the issues listed below, but referred to elsewhere by basic designation only, for a part of this specification to the extent indicated by the references thereto (where a number is suffixed to the specification number, it denotes the effective amendment to the specification):

(a) Federal Specifications and Standards.

QQ-C-576b(1) Copper flat products with slit, slit and edge-rolled, sheared, sawed or machine edges (plate, bar, sheet, and stip).
FED-STD-158a Cements, hydraulic; sampling, inspection and testing.

(b) Non-Government Specifications and Standards.

American Society for Testing and Materials (ASTM)

A82-62T Cold drawn steel wire for concrete reinforcement .
A152-65 Zinc-coating (hot dip) on iron and steel hardware.
A167-63 Corrosion resisting chromium nickel steel plate, sheet, and strip.
A615-68 Deformed
C5-59 Quicklime for structural purposes.
C55-64T Concrete building brick.
C62-62 Building brick (solid masonry units made from clay or shale.
C90-66T Hollow load bearing concrete masonry units.
C91-66 Masonry cement.
C129-64T Hollow non load bearing concrete masonry units.
C144-66T Aggregate for masonry mortar.
C145-66T Solid load bearing concrete masonry units.
C150-66 Portland Cement
C207-49 Hydrated lime for masonry purposes.
D412-66T Method of tension testing of vulcanized rubber.

4A.2 General requirements. Masonry work of the types indicated shall be provided, and masonry work shall be properly coordinated with the work of other trades. The source of supply for materials which will affect the appearance of the finished work shall not be changed after the work has started.

4A.3 Materials. Cement, lime, and other cementitious materials shall be delivered to the site and stored in unbroken bags, barrels, or other approved containers, plainly marked and labeled with the manufacturer's names and brands. Mortar materials shall be stored in dry, weathertight sheds or enclosures, and shall be stored and handled in a manner which will prevent the inclusion of foreign materials and damage by water or dampness. Masonry

units shall be handled with care to avoid chipping and breakage, and shall be stored as directed. Materials stored on newly constructed floors shall be stacked in such manner that the uniformly distributed loading does not exceed 50 psf. Masonry materials shall be protected from contact with the earth and exposure to the weather, and shall be kept dry until used. Materials containing frost or ice shall not be used.

4A.3.1 Common (building) brick shall conform to ASTM Specification C62, Grade SW where exposed to weather, or in contact with the earth, and grade SW or MW for other locations. Brick shall be of modular dimensions and shall be 2-1/4 inches high 3-5/8 inches wide and 7-5/8 inches long.

4A.3.2 Concrete masonry units shall be of modular dimensions, and shall be either air, water, or steam cured. Type II units shall be stored at the site before use a minimum of 28 days for air cured units; 10 days for steam or water cured units; and 3 days for units cured with steam at a pressure of 120 to 150 psi and at a temperature of 350 to 365 degrees Fahrenheit for at least 5 hours. Surfaces of units which are to be stuccoed shall be sufficiently rough to provide a suitable bond; elsewhere, exposed surfaces of units shall be comparatively smooth and of uniform texture.

(a) Hollow load bearing units shall conform to ASTM Specification C90; grade U-I or U-II shall be provided for exterior walls.

(b) Hollow non load bearing units, Type I or Type II, conforming to ASTM Specification C129, shall be provided for interior non load bearing walls and partitions, except that load bearing units may be provided in lieu of non load bearing units.

(c) Special shapes, such as closures, header units and the jamb units, shall be provided as necessary to complete the work, and shall conform to the applicable portions of the specifications for the units with which they are used.

4A.3.3 Portland cement shall be type I, conforming to ASTM Specification C150.

4A.3.4 Masonry cement shall be type II, conforming to ASTM Specification C91, except that it shall be bin or car tested in accordance with FED-STD-158.

4A.3.5 Lime paste shall be made with pulverized quicklime, or with hydrated lime, which shall be allowed to soak not less than 72 hours before use; except that hydrated lime, processed by the steam method, shall be allowed to soak not less than 24 hours, and shall be made by adding the lime to the water. In lieu of hydrated lime paste for use in mortar, the hydrated lime may be added in the dry form.

(a) Hydrated lime shall be type S, conforming to ASTM specification C207.

(b) Pulverized quicklime shall conform to ASTM specification C5, shall pass a no. 20 sieve, and 90 percent shall pass a no. 50 sieve.

4A.3.6 Sand shall conform to ASTM specification C144.

4A.3.7 Water for mixing shall be potable.

4A.3.8 Horizontal joint reinforcement shall be fabricated from cold drawn steel wire, conforming to ASTM Specification A82. The wire shall be zinc coated after fabrication by the hot dip process in accordance with ASTM Specification A153. Reinforcement shall consist of two or more parallel longitudinal wires, not less than 0.1875 inch in diameter, weld connected with cross wires, not less than 0.1350 inch in diameter; cross wires shall be crimped to provide an effective moisture drip in wall cavity. The out to out spacing of the longitudinal wires shall be 1-1/2 to 1-3/4 inches less than the actual width of the masonry. The distance between welded contacts of cross wires with each longitudinal wire shall not exceed 6 inches for smooth wire and 16 inches for deformed wire. Joint reinforcement shall be provided in flat sections not less than 10 feet in length except that corner reinforcements and other special shapes may be less in length.

4A.3.9 Anchors and ties shall be of approved designs, and shall be of copper clad steel, zinc coated steel, or of non corrosive metal having the equivalent total strength of steel types. Zinc coated materials shall be coated by the hot dip process after fabrication.

(a) Wire mesh ties shall consist of wire, not less than 0.0625 inch in diameter, in1/2 inch mesh, and of suitable width and length.

(b) Corrugated metal ties shall be not less than 7/8 inch wide by approximately 7 inches long, and not lighter than 18 gage.

(c) Rigid steel anchors shall be not less than 1 inch wide, 1/4 inch thick, and 18 inches long between bent ends. Each end shall be bent down not less than 3 inches into mortar filled cells.

(d) Anchors used with embeded slots or inserts shall be the dovetail type, of sheet steel, not lighter than 16 gage and 1 inch wide, and shall be crimped, corrugated or bent at end to provide adequate anchorage; anchors for wire inserts shall be of 9 gage wire, looped and closed. Anchors shall be of the proper length for the use intended. Dovetail slots and inserts are specified under the section entitled "Concrete Construction".

4A.3.10 Fastenings. Suitable bolts, metal wall plugs, or other approved metal fastenings shall be provided for securing furring to masonry, and elsewhere as necessary.

4A.3.11 Reinforcing steel rods shall conform to ASTM Specification A615, Grade 40.

4A.3.12 Through wall flashing shall be one of the following types as specified hereinafter.

(a) Coated copper flashing shall be 5 ounce electrolytic copper sheet, uniformly coated with an acid proof, alkaliproof, elastic bituminous compound. Coating shall be factory applied to a weight of not less than 6 ounces per square foot on each side of sheet.

(b) Six ounce copper or 0.006 inch thick stainless steel flashing shall be provided with factory fabricated deformations that mechanically bond flashing against horizontal movement in all directions. Such deformations shall consist of dimples, diagonal corrugations, or a combination of dimples and transverse corrugations. Copper shall conform to specification QQ-C-576. Stainless steel shall be corrosion resisting steel conforming to ASTM specification A167, sheet or strip, type 316; finish shall be No. 2D or No. 2 for sheet and strip, respectively.

(c) Plastic flashing shall be a nonreinforced, homogenous, waterproof, impermeable elastomeric sheeting not less than 0.030 inch thick. Sheeting shall have not less than 1,000 pounds per square inch tensile strength nor more than 7 percent tension set at 50 percent elongation when tested in accordance with ASTM Method D412. Sheeting shall be suitable stabilized to resist exposure without visible deterioration when tested not less than 400 hours in accordance with ASTM Method D822. The material which has been exposed for not less than 1/2 hour to a temperature of minus 20 degrees Fahrenheit shall show no cracking or flaking when it is bent 180 degrees over a 1/32 inch diameter mandrel and then bent at the same point over the same size mandrel in the opposite direction 360 degrees.

4A.4 Erection.

4A.4.1 Workmanship. Masonry walls shall be carried up level and plumb all around. One section of the walls shall not be carried up in advance ot the others, unless specifically approved. Unfinished work shall be stepped back for joining with new work; toothing will not be permitted, except where specified. Heights of masonry shall be checked with an instrument at each floor, and at sills and heads of openings to maintain the level of the walls. Door and window frames, louvered openings, anchors, pipes, ducts and conduits shall be built in carefully and neatly as the masonry work progresses. Spaces around metal door frames shall be filled solidly with mortar. Masonry units shall be handled with care to avoid chipping, cracking, and spalling of faces and edges. Drilling, cutting, fitting, and patching, to accommodate the work of others, shall be performed by masonry mechanics. Masonry shall be cut with masonry saws in exposed work, where directed. Structural steel work, bolts, anchors, inserts, plugs, ties, lintels, and miscellaneous metal work specified elsewhere shall be placed in position as the work progresses. Chases of approved dimensions for pipes and other purposes shall be provided where indicated or necessary. Tops of exposed walls and partitions, not being worked on, shall be covered with a waterproof membrane, well secured in place. Unless indicated otherwise, partitions shall extend from the floor to the bottom of the floor or roof construction above. Walls and partitions shall be structurally bonded or anchored to each other and to concrete walls, and columns. Non load bearing partitions and interior walls shall be securely anchored to the construction above, in a manner that provides lateral stability while permitting unrestricted deflection of construction above. Scaffolding shall be inspected regularly, and shall be amply strong, well braced, and securely tied in position. Overloading of scaffolding will not be permitted.

4A.4.2 Mortar mixing. Mortar materials shall be measured in approved containers that will insure that the specified proportions of materials will be controlled and accurately maintained during the progress of the work. Measuring materials with shovels will not be permitted. Unless specified otherwise, mortar shall be mixed in proportions by volume. The aggregates shall be introduced and mixed in such a manner that the materials will be distributed uniformly throughout the mass. A sufficient amount of water shall be added gradually and the mass further mixed, not less than 3 minutes, until a mortar of the plasticity necessary for the purposes intended is obtained. The mortar shall be machined mixed in approved mixers, of the type in which the quantity of water can be controlled accurately and uniformly. Mortar boxes, pans, or mixer drums, shall be kept clean and free of debris or dried mortar. The mortar shall be used before the initial setting of the cement has teken place; retempering of mortar in which cement has started to set will not be permitted. Anti-freeze compounds, salts, or any other substance used to lower the freezing point of mortar will not be permitted.

(a) Mortar for brick and concrete masonry unit work. The color of cement and sand used in mortar for exposed work shall produce, without the admixture of any coloring matter, a mortar of uniform shade.

(1) Mortar shall be mixed in the proportions of one part portland cement, one part lime paste, and 6 parts sand; or one part masonry cement and 3 parts sand.

(b) Mortar for parging masonry walls above and below grade shall be mixed in the proportions of one part portland cement, 1/4 part hydrated lime, and 3 parts sand.

(c) Grout shall consist of a mixture of cementitious materials and aggregate as specified hereinafter; water shall be added in sufficient quantity to produce a fluid mixture. Fine grout shall be provided in grout spaces less than 2 inches in any horizontal dimension or in which clearance between reinforcing and masonry is less than 3/4 inch. Course grout shall be provided in grout spaces 2 inches or greater in all horizontal dimensions and clearance between reinforcing and masonry is not less than 3/4 inch.

(1) Fine grout shall be mixed in proportions of one part portland cement, 1/4 part lime paste, and 3 parts sand.

(2) Coarse grout shall be mixed in proportions of one part portland cement, 1/4 part lime paste, 3 parts sand, and 3 parts pea gravel passing a 3/8 inch sieve.

4A.4.3 Mortar joints shall beuniform in thickness and the average thickness of any three consecutive joints shall be 3/8 inch to 1/2 inch, unless otherwise specified. "Story poles" or "gage rods" shall be made and approved prior to starting the work, and shall be used throughout the work. Changes in coursing or bonding after the work is started will not be permitted.

Exposed joints shall be tooled slightly concave with a round or other approved jointer when the mortar is thumbprint hard. The jointer shall be slightly larger than than the width of the joint, so that complete contact is made along the edges of the units, compressing and sealing the surface of the joint. Joints in masonry that will not be exposed shall be struck flush. Horizontal joints shall be tooled first. Joints shall be brushed to remove all loose and excess mortar. All horizontal joints shall be level; vertical joints shall be plumb and in alignment from top to bottom of wall within a tolerance of plus or minus 1/2 inch.

4A.4.4 Work in freezing weather. Masonry shall not be laid when the air temperature is below 40 degrees Fahrenheit, on a falling thermometer, or when it appears probable that temperatures below 40 degrees Fahrenheit will be encountered before the mortar has set, unless approved means are provided for protecting the work from freezing. Protection shall consist of heating and maintaining the temperature of the masonry materials at not less than 40 degrees Fahrenheit but not more than 160 degrees Fahrenheit and maintaining an air temperature above 40 degrees Fahrenheit on both sides of the masonry for not less than 72 hours. Work will not be permitted with or on frozen materials. Masonry work may be started at 34 degrees Fahrenheit on a rising thermometer.

4A.4.5. Brickwork. Over or underburned, warped, spalled, and cracked or broken brick shall not be used where exposed, but may be used as back-up and where concealed. Brick, where exposed, shall be selected when placing for the better face for stretchers, and the better end for headers. Clay or shale brick shall be tested daily on the job, prior to laying, to determine if they will require wetting. A circle the size of a silver quarter shall be drawn on five random selected bricks with a wax pencil. Twenty drops of water shall be applied with a medicine dropper to the surface within the circle on each brick. If the average time that the water is completely absorbed in the five bricks is less than 1-1/2 minutes, the bricks represented by the five bricks shall be wetted. During freezing weather, units requiring wetting shall be sprinkled with warm water. The method of wetting shall be such as to insure that each unit is nearly saturated, but surface dry when laid. Unless indicated or specified otherwise, brickwork shall be laid in running bond. All joints between bricks shall be filled completely with mortar. Bed joints shall be formed of a thick layer of mortar, which shall be smoothed, or furrowed lightly. Head joints shall be formed by applying to the brick to be laid, a full coat of mortar on the entire end, or on the entire side, as the case requires, and then shoving the mortar covered end or side of the brick tightly against the brick laid previously, the practice of buttering at the corners of brick and then throwing mortar or scrapings into the empty joints will not be permitted. Closure brick shall be laid with a bed joint and with head joints, and the brick shall be placed carefully without distrubing the brick previously laid. Dry or butt joints will not be permitted. Grounting shall be provided as specified.

(a) Brick faced walls shall consist of concrete masonry units, faced with brick. The facing and the backing shall be bonded together with horizontal welded wire tie reinforcement. Additional metal dovetail bonding ties, as indicated on the drawings, shall be provided where concrete masonry units and brick abutt or extend in front of concrete columsn.

(1) Collar joints in brick faced walls shall be filled by parging the back of thefacing with a uniform trowel coat of mortar, not less than 3/8 inch thick. Parging shall be applied in such a manner that the alignment and the bond of the masonry units will not be disturbed. Filling collar joints by slushing will not be permitted.

(b) Cavity walls shall be constructed of a backing of brick separated from a brick exterior wythe by a 2-3/4 inch wide continuous air space. The two sythes shall be securely tied together with horizontal joint reinforcement placed as specified hereinafter. Mortar beds shall be beveled away from cavity so that no mortar fins project into cavity when bricks are shoved in placed. The space between the wythes shall be kept clear and clean of mortar droppings, by use of wood strips slightly narrower than cavity; strips shall be laid on horizontal reinforcing and lifted out and cleaned periodically. One half inch screened gravel aggregate shall be provided to a depth of 4 inches in bottom of cavity. Weep holes, approximately 5/16 inch in diameter and spaced 24 inches apart, shall be provided at base of wall cavity, where cavity is closed over with masonry or flashing, and other locations as indicated. Weep holes shall extend through vertical joints of exterior masonry wythe.

(c) Reinforced brick masonry walls shall be constructed of two wythes of brick separated by a 2-3/4 inch wide continuous space which shall be filled with grout and reinforced as indicated.Mortar beds shall be beveled away from grout space so that no fins project into grout space when bricks are shoved in place. Furrowed bed joints will not be permitted. Exterior wythe of -rick shall be laid to the height of each grout pour in advance of interior wythe; grout space shall be cleaned and reinforcing shall be set before interior wythe is laid. Metal ties may be used as approved, to prevent spreading of the wythes and to maintain vertical alignment of walls.

(1) Reinforcing shall be positioned as indicated. Vertical reinforcing shall be wired securely in position as the brickwork progresses. Horizontal reinforcing shall be embedded in grout as the grouting proceeds. The minimum clear distance between parallel bars shall be the nominal diameter of the bars; the minimum clear distance between masonry and reinforcing shall be 1/4 inch. Unless indicated or specified otherwise, splices shall be formed by lapping bars not less than 20 bar diameters and wire tying them together. Splices in adjacent horizontal bars shall be staggered.

4A.4.6 Concrete masonry unit work. The first course of concrete masonry units shall be laid in a full bed of mortar for the full width of the unit; the succeeding courses shall be laid with broken joints. The bed-joints

of concrete masonry unit shall be formed by applying the mortar to the entire top surfaces of the inner and outer face shells, and the head joints shall be formed by applying the mortar for a width of about 1 inch to the ends of the adjoining units laid previously. The mortar for joints shall be smooth, not furrowed, and shall be of such thickness that it will be forced out of the joints as the units are being placed in position. Where anchors, bolts, and ties occur within the cells of the units, such cells shall be filled with mortar or grout as the work progresses. Metal lath shall be placed under cells before they are filled. Concrete brick shall be used for bonding walls, working out the coursing and elsewhere as required. Concrete masonry units shall be dampened before or during laying.

(a) Reinforced concrete masonry unit walls shall belaid in such manner as to preserve the unobstructed vertical continuity of cores to be filled. Cross webs adjacent to vertical cores that are to be filled with grout shall be fully embedded in mortar, to prevent leakage of grout. Mortar fins protruding from joints shall be removed before grout is placed, the minimum clear dimensions of vertical cores shall be 2 inches by 3 inches.

(1) Reinforcing shall be positioned accurately as indicated. As masonry work progresses, vertical reinforcing shall be rigidly secured in place at vertical intervals not to exceed 160 bar diameters. Horizontal reinforcing shall be embedded in grout as grouting proceeds. The minimum clear distance between masonry and vertical reinforcement shall be not less than 1/2 inch. Unless indicated or specified otherwise, splices shall be formed by lapping bars not less than 20 bar diameters and wire tying them together.

4A.4.7 Bonding and anchoring. Masonry walls and partitions shall be securely anchored or bonded at points where they interesect and where they abut or adjoin the concrete frame of a buidling. All anchors shall be completely embedded in mortar.

(a) Corners and intersections of load bearing masonry walls shall be bonded in each course with a true masonry bond, except where indicated or specified otherwise.

(b) Intersecting bearing walls which are erected separately shall be anchored with rigid steel anchors spaced not more than 2 feet apart vertically.

(c) Intersections of non-load bearing partitions with other walls or partitions shall be tied with corrugated metal anchors at vertical intervals of not more than 2 feet, or with masonry bonding in alternate courses.

(d) Masonry walls facing or abutting concrete members shall be anchored to the concrete with dovetail or wire type anchors inserted in slots or insets built into the concrete. Anchors shall be spaced not more than 18 inches on centers vertically and not more than 24 inches on centers horizontally.

4A.4.8 Through wall flashing, of the type specified hereinbefore, shall be provided at pump house ealls. Unless indicated otherwise, flashing shall extend from a point 1/2 inch from exterior face of walls, across wall cavity not less than 6 inches and into mortar of bed joint for backing wythe. Flashing shall be terminated 3/4 inch back from interior face of walls and turned back on itself not less than 1/2 inch. Flashing shall be laid in a slurry of fresh mortar and covered with a full bed of fresh mortar; total joint thickness shall not exceed thickness of joints without flashing. Flashing shall be provided in lengths as long as practicable. Ends shall be lapped not less than 1-1/2 inches for interlocking type ends and 4 inches for other types that shall be cemented as approved.

4A.4.9 Welded wire tie reinforcement shall be provided where indicated and in the two courses above and below openings in walls and partitions of concrete masonry units. Welded wire tie reinforcement shall be provided in every course of concrete masonry unit walls of elevator shafts. Reinforcement shall be continuous. Reinforcement above and below openings shall extend not less than 24 inches beyond each side of openings. Reinforcement shall beprovided in the longest available lengths, utilizing the minimum number of splices. Splices shall overlap not less than 12 inches. Welded "L" shaped assemblies, not less than 40 by 48 inches, and "T" shaped assemblied, not less than 32 by 32 inches, both of the same size members and the same construction as the straight reinforcement, shall be provided at corners and intersections of walls or partitions. Reinforcement shall be embedded in the mortar joints in such manner that all parts will be protected by mortar.

4A.4.10 Concrete masonry unit lintels and bond beams shall be formed of units having the cells filled solidly with concrete, and provided with not less than two no. 5 reinforcing bars, unless indicated otherwise. Reinforcing shall overlap a minimum of 24 bar diameters at splices; bond beams and reinforcing shall be broken at expansion joints. Concrete masonry units used for lintels and bond beams shall be of special shapes, and exposed work shall be of the same material and texture as the adjoining masonry units. Lintels shall be built on the ground and allowed to set at least six days before being moved, and they shall be straight and true and shall have at least six inches of bearing at each end.

4A.5 Parging. The outside of concrete walls below grade in contact with the earth shall be parged with two coats of portland cement mortar, each 3/8 inch thick. The first coat shall be cross scratched; the second coat shall be troweled smooth, beveled at the top, and coved out to the edge of the footing. The parging shall extend not less than 4 inches above grade, and shall be kept damp for at least 3 days.

4A.6 Cleaning. At the completion of the masonry work, holes in exposed masonry shall be pointed, and defective joints shall be cut out and tuck pointed solidly with mortar. Exposed surfaces of exterior and interiro brickwork shall be thoroughly wetted with clear water and scrubbed with a solution of not more than 1 part of muriatic acid to 9 parts of water,

applied to an area not over 15 to 20 square feet at a time, with a stiff fiber brush. Immediately after cleaning, each area shall be rinsed thoroughly with clear water. Other exposed masonry surfaces shall be scrubbed with warm water and soap, and rinsed thoroughly with clear water. Work which may be damaged, stained, or discolored, shall be protected during the cleaning process; work that is damaged, stained, or discolored shall be restored to its original condition, or replaced.

4A.7 Quality Control. Provisions of section entitled "Contractor Quality Control" shall apply.

4A.7.1 Samples. Two samples of each type of wall reinforcement, anchor, and wall tie, shall be submitted for approval.

4A.7.2 Sample panels. Before masonry work is started, approved sample panels approximately 6 feet long, 4 feet high, and of the proper thickness, shall be provided as directed. One face shall show the workmanship. coursing, bond, thickness, tooling of joints, range of color, texture of the masonry, and the color of the mortar, all as specified or selected. The finished work shall match the approved sampled panel.

4A.7.3 Tests and testing.

(a) Efflorescence tests shall be made on the brick and mortar materials which will be exposed to weathering. Tests shall be scheduled far enough in advance of starting masonry work to permit retesting if necessary.

(1) Masonry units. Ten unbroken specimens of each type of masonry unit shall be selected in 5 pairs, each pair of similar appearance. One unit of each pair shall be tested by placing it on end in a glass or glazed receptacle in which a 1 inch depth of distilled water is maintained. After being indoors at normal temperatures for 7 days, the masonry unit shall be removed from the water and air dried for 24 hours. Each pair of units shall be compared, and if the difference due to efflorescence is noticeable on any of the five samples, when viewed at a distance of 10 feet, the units represented by the samples will be rejected.

(2) Mortar. A mortar specimen, weighing 3 ounces, shall be prepared of each proposed mix, using as little water as possible. While still in a plastic condition and prior to its initial set, each mortar specimen shall be placed in a glass or glazed receptacle, and four ounces of distilled water shall be mixed with the mortar and stireed thoroughly for 5 minutes. The receptacle shall be of such a size that when the mortar specimen and water are combined in solution , and a masonry unit is placed in it, the solution will have a depth of 1/2 to 1 inch. A masonry unit, which has been tested and found free of efflorescence, shall be placed on end in the solution and the water level maintained at 1/2 to 1 inch with distilled water. After being indoors at normal temperature for 7 days, the masonry unit shall be removed from the solution and air dried for 24 hours. The masonry unit shall be compared with an untreated unit, and if the difference due to efflorescence is noticeable, when viewed at a distance of 10 feet, the mortar components shall be tested in separate receptacles, each containing a masonry unit which has been tested and found free of efflorescence. Each mortar component shall be thoroughly mixed with 4 ounces of distilled

miscellaneous metal work to supporting construction unless indicated otherwise. Shop drawings for miscellaneous metal work, showing materials, finishes dimensions and other pertinent details, shall be submitted for approval prior to fabrication.

5A.3 Materials. Unless specified otherwise, materials shall be in accordance with the following specifications and standards as applicable

Materials	Specifications
Structural steel - plated, shapes and tubes	A 36
Carbon steel - sheets and strips	QQ-S-698
Steel pipe - welded and seamless	WW-P-404
Aluminum alloy castings	QQ-A-601

5A.3.1 Protective coatings. All surfaces of ferrous metal shall be shop primed in accordance with specification 22Y, except: zinc coated and plated work, and those surfaces to be embedded in concrete or mortar. Non-ferrous metal surfaces shall be protected by plating, anodic, organic or other coats as specified herein. Where surfaces of dissimilar metals are contiguous or metals are in contact with an absorptive material such as masonry, concrete, or stucco, they shall be given a heavy brush coat of bituminous paint conforming to specification TT-V-51 or separated by a non-absorptive tape or gasket. Zinc chromate primer, conforming to specification TT-P-645, may be substituted for bituminous coating:

5A.4 Detail requirements.

5A.4.1 Anchors and bolts in addition to those indicated, shall be provided where required for securing the work in place. Sizes, types and spacings of anchors and bolts not indicated or specified otherwise shall be as necessary for their purposes. Anchors and bolts in contact with ferrous metal shall be of zinc coated steel and those adjacent to nonferrous metals shall be of the same or approved metals compatible with the materials which they adjoin.

5A.4.2 Inserts and sleeves. Inserts of suitable and approved types shall be provided where required for the support or anchorage of equipment and finish construction . Inserts shall be gray or malleable iron castings or of galvanized steel unless indicated or specified otherwise. Sleeves required for the passage of pipes through concrete or masonry construction shall be of standard weight zinc coated steel pipe, conforming to specification WW-P-404.

5A.4.3 Frames for door openings numbered "113" and "211" shall be constructed of structural steel as shown. Jambs shall be fitted accurately to the head and reinforced with clip angles on the concealed surfaces. Joints shall be welded along their entire length. Exposed edges of frame components shall be smooth and frames shall be securely anchored to the supporting construction with 2 inch by 3/16 inch steel straps spaced not more than 3 feet on centers along the jambs. Frames shall be tapped as required for the attachment of collateral materials and equipment and shall be reinforced as necessary to develop the full strength of the machine bolt or screw threads.

DIVISION 5. METALS

SECTION 5A. Miscellaneous metal
5B. Steel Joists
5C. Steel Roof Decks
5D. Structural Steelwork

SECTION 5A. MISCELLANEOUS METAL

5A.1 Applicable publications. The following publications of the issues listed below, but referred to elsewhere by basic designation only, form a part of this specification to the extent indicated by the references thereto (where a number is suffixed to the specification number, it denotes the effective amendment to the specification):

(a) Bureau of Yards and Docks/NAVFAC Specifications.

22Yg Structural steelwork, including addendum no. 1.

(b) Federal and Military Specifications.

QQ-A-601d Aluminum alloy sand castings
QQ-S-698(2) Steel, sheet and strip, low carbon
RR-G-661b Gratings, steel, floor (except for Naval vessels).
TT-P-645 Primer, paint, zinc-chromate, alkyd type.
TT-V-51e Varnish, asphalt.

(c) Non-Government Specifications and Standards.

American Society for Testing and Materials (ASTM)

A36-67 Specification for structural steel (tentative).

5A.2 General requirements. Miscellaneous metal work shall be well constructed products conforming to the types, materials and details indicated or specified herein. Basic forms of metal components from which assemblies are fabricated shall be of wrought or cast metal as shown or specified and physical properties, including tempers, of the metals shall be suitable for their intended use. All metals shall be free of defects which will affect their strength or durability and where exposed to view in the finished work, edges and surfaces shall be without burrs, gouges, scratches or other blemishes which mar their appearance. Exposed welds and brazed or soldered joints shall be ground smooth; polished or other surfaces with applied finishes shall be protected against damage or defacement of any kind. Assemblies shall be of the manufacturer's standard construction except where indicated or specified otherwise. Permanent connections subject to impact or other live loads shall be effected by welding, riveting or other approved methods. Welding shall conform to specification 22Y and shall be accomplished so as to prevent permanent distortion of the connected parts. Bolts, screws and similar suitable fastenings shall be used for anchoring of securing

DIVISION 5. METALS

SECTION 5A. Miscellaneous metal
5B. Steel Joists
5C. Steel Roof Decks
5D. Structural Steelwork

SECTION 5A. MISCELLANEOUS METAL

5A.1 Applicable publications. The following publications of the issues listed below, but referred to elsewhere by basic designation only, form a part of this specification to the extent indicated by the references thereto (where a number is suffixed to the specification number, it denotes the effective amendment to the specification):

(a) Bureau of Yards and Docks/NAVFAC Specifications.

22Yg Structural steelwork, including addendum no. 1.

(b) Federal and Military Specifications.

QQ-A-601d Aluminum alloy sand castings
QQ-S-698(2) Steel, sheet and strip, low carbon
RR-G-661b Gratings, steel, floor (except for Naval vessels).
TT-P-645 Primer, paint, zinc-chromate, alkyd type.
TT-V-51e Varnish, asphalt.

(c) Non-Government Specifications and Standards.

American Society for Testing and Materials (ASTM)

A36-67 Specification for structural steel (tentative).

5A.2 General requirements. Miscellaneous metal work shall be well constructed products conforming to the types, materials and details indicated or specified herein. Basic forms of metal components from which assemblies are fabricated shall be of wrought or cast metal as shown or specified and physical properties, including tempers, of the metals shall be suitable for their intended use. All metals shall be free of defects which will affect their strength or durability and where exposed to view in the finished work, edges and surfaces shall be without burrs, gouges, scratches or other blemishes which mar their appearance. Exposed welds and brazed or soldered joints shall be ground smooth; polished or other surfaces with applied finishes shall be protected against damage or defacement of any kind. Assemblies shall be of the manufacturer's standard construction except where indicated or specified otherwise. Permanent connections subject to impact or other live loads shall be effected by welding, riveting or other approved methods. Welding shall conform to specification 22Y and shall be accomplished so as to prevent permanent distortion of the connected parts. Bolts, screws and similar suitable fastenings shall be used for anchoring of securing

miscellaneous metal work to supporting construction unless indicated otherwise. Shop drawings for miscellaneous metal work, showing materials, finishes dimensions and other pertinent details, shall be submitted for approval prior to fabrication.

5A.3 Materials. Unless specified otherwise, materials shall be in accordance with the following specifications and standards as applicable

Materials	Specifications
Structural steel - plated, shapes and tubes	A 36
Carbon steel - sheets and strips	QQ-S-698
Steel pipe - welded and seamless	WW-P-404
Aluminum alloy castings	QQ-A-601

5A.3.1 Protective coatings. All surfaces of ferrous metal shall be shop primed in accordance with specification 22Y, except: zinc coated and plated work, and those surfaces to be embedded in concrete or mortar. Non-ferrous metal surfaces shall be protected by plating, anodic, organic or other coats as specified herein. Where surfaces of dissimilar metals are contiguous or metals are in contact with an absorptive material such as masonry, concrete, or stucco, they shall be given a heavy brush coat of bituminous paint conforming to specification TT-V-51 or separated by a non-absorptive tape or gasket. Zinc chromate primer, conforming to specification TT-P-645, may be substituted for bituminous coating:

5A.4 Detail requirements.

5A.4.1 Anchors and bolts in addition to those indicated, shall be provided where required for securing the work in place. Sizes, types and spacings of anchors and bolts not indicated or specified otherwise shall be as necessary for their purposes. Anchors and bolts in contact with ferrous metal shall be of zinc coated steel and those adjacent to nonferrous metals shall be of the same or approved metals compatible with the materials which they adjoin.

5A.4.2 Inserts and sleeves. Inserts of suitable and approved types shall be provided where required for the support or anchorage of equipment and finish construction . Inserts shall be gray or malleable iron castings or of galvanized steel unless indicated or specified otherwise. Sleeves required for the passage of pipes through concrete or masonry construction shall be of standard weight zinc coated steel pipe, conforming to specification WW-P-404.

5A.4.3 Frames for door openings numbered "113" and "211" shall be constructed of structural steel as shown. Jambs shall be fitted accurately to the head and reinforced with clip angles on the concealed surfaces. Joints shall be welded along their entire length. Exposed edges of frame components shall be smooth and frames shall be securely anchored to the supporting construction with 2 inch by 3/16 inch steel straps spaced not more than 3 feet on centers along the jambs. Frames shall be tapped as required for the attachment of collateral materials and equipment and shall be reinforced as necessary to develop the full strength of the machine bolt or screw threads.

5A.4.4 Steel floor gratings shall conform to Type II of specification RR-G-661 and shall have zinc coated finish. End banding bars shall be provided unless indicated otherwise.

5A.4.5 Ladders shall be constructed of carbon steel with rails of 3/8 inch by 2-1/2 inch flat bars spaced 18 inches apart. Rungs shall be of 3/4 inch diameter deformed reinforcing bars spaced 12 inches on centers and shall be fitted tightly into the rails and welded in an approved manner. Exposed ends of rungs shall be finished smooth. Brackets of suitable sizes shall be provided at intervals not to exceed 10 feet and as necessary to secure a rigid installation with the centers of the rungs not less than 6 inches from the adjacent construction. Gooseneck and spreaders shall be provided as indicated and ladder assemblies shall be securely anchored to the supporting construction. Ladders shall be hot dipped galvanized after fabrication.

5A.4.6 Railings shall be of the types, materials, and construction indicated or specified and shall be in one length for each run where practicable. Fixed railings shall be securely anchored to the supporting construction.

(a) Pipe railings shall be of the configurations indicated with flush welded joints. Railings shall be complete with standards, brackets, caps, plugs and all other accessories and fastenings necessary for a complete installation.

(1) Steel pipe railings shall be fabricated from standard weight black steel pipe having a nominal inside diameter of 1-1/2 inches. Assemblies shall be hot dipped galvanized after fabrication.

5A.4.7 Safety nosings shall be of cast aluminum not less than 5/16 inch thick with an abrasive aggregate cast integral with the wearing surface. Nosings shall be not less than 4 inches wide and shall extend the full length of each step tread, landing and floor edge or as indicated. Suitable anchors, spaced not more than 15 inches on centers, shall be provided to secure the nosings to the supporting construction.

5A.4.8 Foundation vents shall be provided where indicated and shall be of cast aluminum conforming to specification QQ-A-601, complete with cast aluminum sliding adjustable grate and aluminum insect screen, size 16 inches wide and 8 inches high.

5A.4.9 Frames for gratings shall be provided where indicated. Frames shall be fabricated from steel plates and angles conforming to specification QQ-S-698. Assemblies, including anchors as indicated, shall be welded. Assemblies shall be hot dipped galvanized after fabrication.

5A.4.10 Metal shelves shall be provided in Water Treatment Plant where indicated on the drawings. Shelves shall be adjustable and formed of 16 gauge steel. Backs and ends shall be formed of 18 gauge steel. All shelves, backs and ends shall have manufacturer's standard color baked on enamel finish. Provide shelf brackets and supports as required.

SECTION 5B. STEEL JOISTS

5B.1 Applicable publications. The following publications of the issues listed below, but referred to elsewhere by basic designation only, form a part of this specification to the extent indicated by the references thereto (where a number is suffixed to the specification number, it denotes the effective amendment to the specification):

(a) Federal Specification.

TT-P-86e Paint; red lead base, ready mixed

(b) Non Government Specifications and Standards.

American Welding Society (AWS)

B3.0-41T Standard qualification procedure.
D1.0-63 Code for welding in building construction.

Steel Joist Institute (SJI)

Standard specifications and load tables, 1967 edition.

5B.2 General requirements. Except where otherwise indicated or specified herein, design, materials, fabrication, and erection shall be in accordance with SJI Standard Specifications and Load Tables.

5B.2.1 Handling, shipping, and storing of joists and accessories shall be performed in a manner that will prevent distortion or other damage. All materials shall be stored off the ground in a well drained location and protected from the weather as approved.

5B.3 Materials.

5B.3.1 Joists shall be of Series type and with chords as indicated as standard with manufacturer and approved.

5B.3.2 Accessories. Bridging, sag rods, extended ends, ceiling extensions, anchors, bolts, headers, trimmers and bearing plates, except as indicated otherwise, shall be manufacturer's standard items as approved providing they conform to SJI Standard Specifications and load tables.

5B.4 Erection. Joists and accessories shall be installed in accordance with SJI Standard specifications and load tables, except as indicated or specified otherwise herein. Ceiling extensions shall be provided where indicated and where necessary for attachment of suspended ceilings and equipment. Joists spacing shall be as indicated.

5B.5 Shop painting. Joists and accessories shall be cleaned of all rust, scale, and otherdeleterious matter prior to painting. Joists and accessories shall be given one shop coat of asphalt base paint except that joists in crawl spaces or not enclosed by ceiling shall be given one shop coat of paint conforming to specification TT-P-86, Type I.

5B.5.1 Touch up. After erection of joists, connections and areas of abraded shop paint shall receive paint of the same type used for the shop coat.

5B.6 Quality Control. Provisions of section entitled "Contractor Quality Control" shall apply.

5B.6.1 Samples and data as specified hereinafter shall be submitted for inspection and approval before delivery of the following materials to the site:

Accessories - Data
Paint - One pint of each kind.

5B.6.2 Tests and test reports. The testing requirements stated herein or incorporated in referenced documents may be waived, provided certified copies of reports of tests from approved laboratories performed on previously cmanufactured materials are submitted and approved. Test reports shall be accompanied by notarized certificates from the manufacturer certifying that the previously tested material is of the same type, quality, and manufacture as that to be furnished for the project.

5B.6.3 Shop drawings indicating joists type and size, layout in plan, methods of anchoring, framing at openings, and spacing of bridging shall be submitted. Joists and accessories shall not be delivered to the site until approved shop drawings have been returned to the manufacturer.

5B.6.4 Welding shall be performed in accordance with AWS Code DI.0. Qualification of welders and duration of qualification period shall bein accordance with AWS Standard B3.0.

---oOo---

SECTION 5C STEEL ROOF DECKS

5C.1 Applicable publications. The following publications of the issues listed below, but referred to elsewhere by basic designation only, form a part of this specification to the extent indicated by the references thereto. (where a number is suffixed to the specification number, it denotes the effective amendment to the specification).

(a) Military Specifications.

MIL-P-21035 Paint,high zinc dust content, galvanizing repair

(b) Non Government Specifications and Standards

American Iron and Steel Institute (AISI)

Light gage cold formed steel design manual (1962 edition).

American Society for Testing and Materials (ASTM)

A254-64 Flat rolled carbon steel sheets of structural quality
A446-67 Zinc coated (galvanized)steel sheets of structural quality, coils and cut lengths
A525-67 General requirements fordelivery of zinc coated (galvanized) iron or steel sheets, coils and cut lengths coated by the hot dip method.

American Welding Society (AWS)

B3.0-41 Standard qualification procedure.
D1.0-66 Code for welding in building construction.

Steel Deck Institute (SDI)

Basic design Specifications (latest edition).

5C.2 General requirements. Steel roof decking shall be provided where indicated and shall be the product of a manufacturer who is established as a fabricator of steel roof decking. All accessories required for a complete installation of the decking shall be provided.

5C.3 Design. The roof system shall be designed in accordance with the requirements of the AISI "Light Gage Cold Formed Steel Design Manual", except as specified otherwise herein. Shortspan ribbed decking, characterized by longitudinal bearing ribs having a depth of less than 3 inches, shall also be in accordance with Steel Deck Institute's "Basic Design Specifications",

except as specified otherwise herein. Dead load shall be assumed as 10 pounds per square foot. The maximum allowable deflection under total loading shall be 1/240 of the span. Roof decking having a cross-sectional configuration that differs from the units indicated may be used, provided that the properties of the proposed units are equal to, or greater than, the properties of the units indicated. Side edges of deck units shall be designed to lap or interlock with adjoining deck units.

5C.4 Delivery, storage, and protection. Steel decking shall be delivered, stored, handled, and installed in a manner to protect it from corrosion, deformation, and other types damage. Special care shall be exercised nto to damage the material or overload the deck during the entire construction period. The maximum uniform distributed storage load shall not exceed the design live load. The deck shall not be used for storage or as a working platform until the units shave been welded in position. All damaged material shall be replaced by the Contractor at no expense to the Government. Decking stored at the site before erection shall be stacked on platforms or pallets, arranged to provide proper circulation and covered with tarpaulings or other suitable weathertight covering. The Contractor shall provide protection as necessary to prefent rusting and damage to protective coatings. Decking that becomes rusted, on which protective coatings become loosened and on which zinc coatings have become corroded shall be replaced with new decking at no additional cost to the Government.

5C.5 Materials.

5C.5.1 Steel used in the fabrication of decking shall conform to the requirements of the AISI "Light Gage Cold Formed Steel Design Manual", except as specified otherwise herein.

5C.5.2 Zinc coating or shop painting. Decking and metal accessories shall be either zinc coated or black steel. Zinc coating shall be Light Commercial in accordance with ASTM Specification A525. Copper bearing steel may be provided in lieu of black steel, if it conforms to the requirements specified for black steel. Zinc coated steel will not require shop painting. Black or copper bearing steel and accessories shall be rustproofed at the factory by the application of a cleaning treatment in accordance with manufacturer's standard procedure followed by a spray, dip, or roller coat of approved rust inhibitive paint, with an oven-dried finish. The shop paint shall be of a type that is suitable for the application of finished painting; specified in another section.

5C.3 Accessories. Metal accessories shall be of the same material as the decking and shall be not lighter than 20 gage, unless specified otherwise herein. All accessories shall be the decking manufacturer's standard type and shall be provided as follows:

(a) Adjusting plates or segments of deck units shall be provided in locations too narrow to accommodate full size units. As far as practical, the plates shall be the same gage and configuration as the decking.

(b) End closures shall be provided to close the open ends at end walls, and openings thru the roof. Closures shall be not lighter than 22 gage.

(c) Cover plates or underlapping sleeves shall be provided at end joints between adjoining non lapping units.

(d) Sump pans shall be provided at drains as indicated and shall be not lighter than 14 gage.

(e) Miscellaneous items. Cant strips, ridge and valley plates, and various type of plate and closures shall be provided as indicated or as necessary to complete the work.

5C.6 Installation. The deck units shall be placed on supports, properly adjusted, and aligned at right angles to supports before being permanently welded in place. Inaccuracies in alignment or leveling of supports shall be corrected before decking is permanently welded in place. End laps of units shall occur over supports only. Minimum lap for the overlapping type shall be 2 inches. Minimum bearing for the abutting type of deck units shall be in accordance with AISI requirements,and underlapping sleeves, cover plates, or pressure sensitive tape as standard with the deck manufacturer shall be provided. On spans under 10 feet, the deck units shall extend over three or more supports.

5C.6.1 Welding. The deck units shall be welded to supports by means of electric arc welding. Welding shall be performed by qualified welders. The qualification of welders and the duration of qualification period shall be in accordance with the requirements of AWS Standard B3.0, and welding shall be in accordance with the requirements of AWS standard D1.0. The location, size, and spacing of welds shall be shown on the approved shop drawings. Warped or bent units shall be clamped or weighted to create firm contact between units and supports while welding is being performed.

5C.6.2 Repair of coatings. Welds shall be cleaned by shipping or wire brushing. (Welds, cut edges, and damaged portions of zinc coatings shall be heavily coated with high zinc dust paint conforming to specification MIL-P-21035.) Welds, cut edges, and damaged portions of shop paint shall be heavily coated with the manufacturer's standard touch up paint.

5C.6.3 Openings through roof shall be reinforced and framed as necessary to rigidity and load carrying capacity. Holes or other openings required for the work of other trades shall be drilled or cut and adequately reinforced by the respective trade; such holes or other openings larger than 6 inches in diameter shall be approved by the deck manufacturer.

5C.7 Quality Control. Provisions of section entitled "Contractor Quality Control" shall apply.

5C.7.1 Samples. One sample of the proposed deck units and each type of accessory shall be submitted and approved before the work is started.

5C.7.2 Shop drawings shall be submitted and approved before the work is started. The drawings shall show a large scaled cross sectional detail of the decking, various connections, bearing on structural supports, methods of welding, attachment of accessories, roof layouts and other pertinent details. Design calculations shall be submitted upon request.

5C.7.3 Materials, tests and test reports. The testing requirements incorporated in referenced documents for materials will be waived, provided certified copies of reports of tests from approved laboratories performed on previously manufactured materials are submitted and approved. Test reports shall be accompanied by notarized certificates from the manufacturer certifying that the previously tested material is of the same type, quality, and manufacture as that furnished for the project.

---o0o---

SECTION 5D STRUCTURAL STEEL WORK

5D.1 Applicable publications. The following publications of the issues listed below, but referred to elsewhere by basic designation only, form a part of this specification to the extent indicated by the references thereto (where a number is suffixed to the specification number, it denotes the effective amendment to the specification).

(a) Bureau of Yards and Docks/NAVFAC Specifications.

22Yg Structural steelwork, including addendum no. 1.

(b) Non Government Specifications and Standards.

American Institute of Steel construction (AISC)

Steel construction manual, sixth edition.

American Society for Testing and Materials (ASTM)

A36-66T Structural steel.
A53-65 Welded and seamless steel pipe.

American Welding Society (AWS)

D1.0-66 Code for welding in building construction

5D.2 General requirements. Except as otherwise specified, steelwork shall be in accordance with specification 22Y for statically loaded structures. Connections for which details are not indicated shall be designed in accordance with the AISC "Steel Construction Manual" and shall be welded or bolted, except as specified otherwise. Bolted connections shall be made with high strength steel bolts. Holes shall be provided where necessary for securing other work to steel framing.

5D.3 Materials.

5D.3.1 Structural carbon steel for bolted or welded work shall conform to ASTM Specification A36.

5D.3.2 Steel pipe shall conform to ASTM specification A53.

5D.3.3 Bolts shall be high strength steel bolts.

5D.3.4 Welding electrodes and rods.

(a) Manual arc welding. Electrodes shall conform to AWS specification A5.1 E60, except that AWS specification A5.5 E70 shall be used in construction of the lime hopper.

5D.4 Erection.

5D.4.1 Column bases shall be set accurately using a grouting mortar

to obtain uniform bearing on the conrete. Anchors and anchor bolts for securing the structural steel to foundations shall be of steel and shall be provided as necessary.

5D.4.2 Grouting mortar for setting base plates of steel columns or bearing plates shall be a non shrinking type of grouting mortar. The mortar shall be a mixture of one bag of portland cement, two cubic feet of well graded fine aggregate, 1 teaspoon of aluminum powder, and enough water to provide a maximum water cement ratio of 0.50 by weight. In lieu of the foregoing, an approved standard commercial grouting mortar containing a metallic chemical oxidizing agent may be used. The approved product shall be delivered to the site of the work in the original sealed containers, each bearing the trade name of the material and the name of the manufacturer. Surfaces to receive the mortar shall be clean and shall be moistened thoroughly immediately before placing the mortar. Exposed surfaces of mortar shall be water cured with wet burlap for seven days.

5D.4.3 Erection tolerances. Individual pieces shall be erected so that deviation from plumb or level shall not exceed 1 to 500, except that in multiple story buildings the error from plumb shall not exceed 1 in 1000 for exterior columns and for columns adjacent to elevator shafts.

5D.4.4 Temporary welds and backing strips shall be removed.

5D.5 Quality Control. Provisions of section entitled "Contractor Quality Control" shall apply.

5D.5.1 Materials, tests and test reports. The testing requirements incorporated in referenced documents for materials will be waived, provided certified copies of reports of tests from approved laboratories performed on previously manufactured materials are submitted and approved. Test reports shall be accompanied by notarized certificates from the manufacturer certifying that the previously tested material is of the same type, quality, and manufacture as that furnished for the project.

---oOo---

DIVISION 6 CARPENTRY

Section 6A Carpentry and Woodwork

6A.1 Applicable publications. The following publications of the issues listed below, but referred to elsewhere by basic designation only, form a part of this specification to the extent indicated by the references thereto (where a number is suffixed to the specification number, it denotes the effective amendment to the specification):

(a) Bureau of Yards and Docks/NAVFAC Specifications.

28Ye Carpentry and woodwork.

(b) Non Government Specifications and Standards.

American Society for Testing and Materials (ASTM)

E84-61 Surface burning charactrristics of building materials.

American Wood Presevers' Association (AWPA)

Book of Standards (Current Edition)

6A.2 General requirements. Workmanship and materials shall conform to specification 28Y, except as indicated or specified otherwise herein. All lumber shall be grade marked and trade marked in accordance with the rules of the association governing for the species, or shall be accompanied by certificates of inspection as required under the section of this specification entitled "General Paragraphs". Lumber for framing, furring and blocking purposes shall be No. 1 Dimension Southern Pine or Standard Grade Douglas Fir.

6A.2.1 Salt preservative pressure treatment in accordance with the current edition of the AWPA Book of Standards shall be provided for the following:

(a) All wood materials in contact with exterior masonry, metal or concrete.

(b) All wood blocking, furring or edge strips used in roof construction.

(c) All wood materials used on the exterior.

6A.3 Quality control. Provisions of Section entitled "Contractor Quality Control" shall apply.

6A.3.1 Tests and test reports. The testing requirements stated herein or incorporated in referenced documents may be waived, provided certified copies of reports of tests from approved laboratories performed on previously manufactured materials are submitted and approved. Test reports shall be accompanied by notariz certificates from the manufacturer certifying that the previously tested material is of the same type, quality and manufacture as that to be furnished for the projec

DIVISION 7. MOISTURE PROTECTION

SECTION 7A. Roofing and Sheet Metal Work
7B. Roof Insulation
7C. Interior Membrane Waterproofing
7D. Exterior Membrane Waterproofing and Dampproofing
7E. Caiking

7A.1 Applicable publications. The following publications of the issues listed below, but referred to elsewhere by basic designation only, form a part of this specification to the extent indicated by the references thereto (where a number is suffixed to the specification number, it denotes the effective amendment to the specification);

(a) Bureau of Yards and Docks/NAVFAC Specifications.

7Yk Roofing and sheet metal work.

7A.2 General requirements. Roofing and sheet metal work shall conform to the applicable requirements of specification 7Y, except as specified otherwise herein. The work includes roofing and sheet metal work. Roof Insulation, Steel Roof Decking, Dampproofing and Membrane Waterproofing are specified in other sections.

7A.3 Built up roofing.

7A.3.1 Built up roofing over insulated decks shall be type 4TIS or 4AIS.

7A.3.2 Glaze coat. After the last ply of felt has been applied, the top surface shall be glaze coated with hot type III asphalt at the rate of not less than 25 pounds per 100 square feet. The specified top pouring and surfacing shall be withheld until (a) all other trades have completed their work on the roof, and (b) the roofing has been inspected for damage, repaired, and approved.

7A.4 Cant strips shall be treated wood as specified in another section.

7A.5 Treated wood roof nailers are specified in another section.

7A.6 Sheet metal work. Metal counter flashings and all other sheet metal work not specified otherwise shall be stainless steel 26 gauge, type 316. Contact surfaces of incompatible metals shall be insulated from each other to prevent electrolytic action.

7A.6.1 Gravity roof ventilators shall be of the stationary type and of sizes and capacities indicated. Ventilators shall be provided with bases as indicated and manually operated dampers.

Ventilators shall be fabricated of .032 inch thick aluminum.

7A.6.2 Gravel stops and roof edge fascias shall be of formed aluminum, 0.032 inch thick aluminum.

7A.7 Parapet wall copings shall be extruded aluminum as indicated. Copings for 8 inch parapet walls shall weight not less than 2.412 pounds per foot and for 12 inch parapet walls not less than 3.702 pounds per foot. Provide welded corner and intersecting wall units, joint covers and attachments as indicated.

7A.8 Roof hatches shall be provided where indicated and shall be of size and construction as detailed on the drawings. Cover and metal curb flashing shall be 16 gauge galvanized metal. Cover shall have flanged sides and hemmed edges neatly soldered for watertight corners and provided with a neoprene gasket draft stop. Each hatch shall be secured with four hot dipped galvanized hooks and screw eyes, 3/16 inch diameter.

7A.9 Skylights shall be provided where indicated on the drawings and shall be of size and construction as indicated on the drawings. They shall be prefabricated sections consisting of a double translucent acrilic plastic dome, .080 inch thick extruded aluminum curb frame with integral condensation and weepage gutter, .125 inch thick preformed extruded aluminum intermediate supports and .062 inch thick extruded aluminum retaining frame for mounting on a 4" concrete curb.

7A.10 Quality control. Provisions of Section entitled "Contractor Quality Control" shall apply.

7A.10.1 Test and test reports. The testing requirements stated herein or incorporated in referenced documents may be waived, provided certified copies of reports of test from approved laboratories performed on previously tested material is of the same type, quality, manufacturer, and make as that furnished for this project.

7A.10.2 Cut outs. Sample cut outs of built up roofing shall be made at locations directed.

---oOo---

SECTION 7B. ROOF INSULATION

7B.1 Applicable publications. The following publications of the issues listed below, but referred to elsewhere by basic designation only, form a part of this specification to the extent indicated by the references thereto (where a number is suffixed to the specification number, it denotes the effective amendment to the specification):

(a) Bureau of Yards and Docks/NAVFAC Specifications.

49Yb Thermal insulation for buildings

7B.2 General requirements. Materials, preparation of surfaces, and methods of application shall conform to the applicable requirements of specification 49Y, except as indicated or specified otherwise.

7B.3 Insulation shall have a "C" factor of 0.15 or less and shall be applied over a vapor barrier.

7B.3.1 Fasteners. In addition to moppings, the insulation shall be mechanically fastened to metal roof decking. Fasteners shall be of the type specified in Specification 49Y, except penetrating type fasteners shall not be allowed.

7B.3.2 Minimum thickness for insulation on steel decking shall be in accordance with the following table. If the specified "C" factor requires greater thickness, the greater thickness shall be provided.

Maximum unsupported width afforded insulation by steel deck provided	Minimum insulation thickness
Up to but no including 1 inch	1/2 inch
Up to but not including 1-3/4 inch	1 inch
Up to but not including 2-3/8 inch	1-1/4 inches
Up to but not including 2-3/4 inches	1-1/2 inches

7B.4 Quality control. Provisions of Section entitled "Contractor Quality Control" shall apply.

7B.4.1 Samples. One sample of each type of proposed insulating and vapor barrier material shall be submitted and approved before the materials are delivered to the site. Samples shall not be larger than 12 inches by 12 inches.

7B.4.2 Test and test reports. The testing requirements stated herein or incorporated in referenced documents may be waived provided certified copies of reports of test from approved laboratories performed on previously manufactured materials are submitted and approved. Test reports shall be accompanied by notarized certificates from the manufacturer certifying that the previously tested material is of the same type, quality, manufacture, and make as that to be furnished for this project.

SECTION 7C INTERIOR MEMBRANE WATERPROOFING

7C.1 Applicable publications. The following publications of the issues listed below, but referred to elsewhere by basic designation only, for a part of this specification to the extent indicated by the references thereto (where a number is suffixed to the specification number, it denotes the effective amendment to the specification).

(a) Federal specifications.

SS-C-153 Cement, bituminous , plastic
LLL-I-535a Insulation board, thermal and insulation block, thermal.

(b) Non Government Specifications and Standards

American Society for Testing and Materials (ASTM)

D41-41 Primer for use with asphalt in dampproofing and waterproofing
D250-60 Asphalt saturated asbestos felts for use in waterproofing and in constructing bult up roofs
D499-49 Asphalt for dampproofing and waterproofing
D1327-59 Woven burlap fabrics saturate dwith bituminous substances for use in waterproofing.

7C.2 General requirements. Bituminous membrane waterproofing shall be provided in the manner specified hereinafter. The provision of all materials indicated, specified, or necessary for a complete and finished installation is included. A three plv system shall be provided where indicated for shower and toilet at second floor and at concrete roof slab at elevation 55.0 above treatment gallery of treatment plant.

7C.2.1 Concrete curing requirements. Concrete surfaces to which membrane waterproofing is to be applied shall be moist cured. Waterproofing shall not be applied to surfaces which have been cured with membrane forming compounds or other coats which may reduce the bonding of the waterproofing to the concrete.

7C.2.2 Surface dryness requirements. The surfaces to which membrane waterproofing is to be applied shall not be considered dry and application shall not be started until the dryness requirements hereinafter specified have been met.

7C.2.3 Weather requirements. Application will not be permitted in spaces exposed to inclement weather or when air temperatures are below 40 degrees Fahrenheit or are expected to go below 40 degrees Fahrenheit within 24 hours after application.

7C.2.4 Heating requirements for asphalt. Kettle and application temperatures for asphalt shall be rigidly adhered to. Kettle temperatures shall be 450-375 degrees Fahrenheit and mop temperatures 425-350 degrees Fahrenheit. Thermometers shall be used to check the kettle temperatures during the heating and application. Kettlemen shall be in attendance at all times during the heating process to assure that temperatures are maintained within the ranges specified.

7C.2.5 Calking, pipe insulation, and flashing. Application shall not be started until roughing in for plumbing, heating, air conditioning and electrical work has been completed and tested, openings for these items have been thoroughly calked, and hot water and steam lines which project through or near the surface have been insulated.

7C.2.6 Protection of finished work. Work of other trades shall be covered with heavy waterproof kraft paper or other approved protective covering with lapped and sealed joints. Stained and damaged work shall be cleaned or replaced as directed and without cost to the Government.

7C.2.7 Ventilation shall be provided in enclosed spaces during application.

7C.2.8 Surface preparation. Surfaces to which membrane waterproofing is to be applied shall be smooth and dry. Holes, joints, cracks, and voids in concrete construction shall be thoroughly wetted with water and then carefully filled with portland cement mortar, struck flush, and permitted to dry. High spots shall be cut off or ground smooth. Mortar joints in masonry walls and precast systems shall be struck flush. Immediately before application, surfaces shall be carefully cleaned to remove dust, grease, and foreign matter, and shall be inspected and approved.

7C.2.9 Priming. Prior to the application of the waterproofing membranes, concrete and masonry surfaces to be waterproofed shall receive a uniform brush coat of primer applied at the rate of one gallon per 100 square feet and shall be allowed to dry thoroughly.

7C.3 Materials. Packaged materials shall be delivered and stored in original unopened containers bearing the manufacturer's name and brand designation. Where materials are covered by a referenced specification, the container shall bear the specification number, type, and class, as applicable. Containers shall not be opened until approved. Materials shall be handled and stored in a manner to prevent damage or contamination of any sort. Materials shall conform to the following specifications and requirements:

Asphalt primer: ASTM D41

Asphalt: ASTM D449, Type C.

Asphalt saturated asbestos felt, 15 lb. type: ASTM D250.

Asphalt saturated woven burlap fabric: ASTM D1327

Bituminous plastic cement: Federal Specification SS-C-153, Type I.

Insulation Board: Federal Specification LLL-I-535, Class C.

7C.4 Application. The waterproofing materials shall be dry when applied and shall be kept dry throughout the waterproofing operations.

7C.4.1 Waterproofing shall be a three ply system started by first applying a 12 inch wide layer of asphalt saturated asbestos felt over which a 24 inch wide layer shall be applied following by a full 26 inch wide layer. Each succeeding layers shall lap the preceding layer by 24-2/3 inches. IN the application, each membrane shall be rolled or firmly pressed into a mop coat of hot asphalt using not less than 20 pounds per 100 square feet spread evenly. Each ply shall be lapped 4 inches at the ends, and end laps shall be staggered not less than 18 inches in relation to laps in the preceding layer. The installed membrane shall be without wrinkles, buckles kinks, or fishmouths and shall be continuous and without reduction in the number of layers at any point. After all plies have been installed, the entire surface of the membrane shall be coated uniformly with hot asphalt using not less than 20 pounds per 100 square feet.

(a) Concrete and masonry surfaces. The three ply system shall be applied to concrete and masonry surfaces in the manner hereinbefore specified.

7C.4.2 Application procedures. The application to vertical and horizontal surfaces, the sealing of intersecting surfaces, and flashing or pipe andduct sleeves shall be done in the following order and in accordance with the following procedures:

(a) Vertical surfaces. Asphalt shall be applied to vertical surfaces with cotton roller mops or other suitable application techniques. The three ply system hereinbefore specified shall be provided. Membranes shall be applied vertically and shall extend from the top of the slab or fill to the ceiling line with no end laps and from intersection to intersection of wall surfaces. Waterproofing membranes shall not be carried around corners but shall be stopped tightly against intersecting surfaces. Vertical intersections shall be sealed in the manner hereinafter specified:

(b) Horizontal surfaces. Starting at the low point, the three ply system hereinbefore specified shall be applied. Waterproofing membranes shall be stopped tightly against intersecting vertical surfaces. Intersections with vertical surfaces shall be sealed in the manner hereinafter specified.

(c) Intersections. Vertical intersections of wall membranes shall be sealed prior to horizontal intersections between wall and floor membranes. Intersecting surfaces shall be sealed with three fabric membrane s-rips 12, 18, and 24 inches wide, respectively, and not more than 12 feet long. Beginning with the 12, then the 18, and finally the 24 inch strip, each strip shall be rolled or firmly pressed into a coat of plastic cement not less than

1/16 thick. The installed strips shall extend 6, 9, and 12 inches respectively, on each side of the intersection and from the top of the slab waterproofing to the ceiling line, with no laps. End strips shall be lapped not less than 3 inches on horizontal interesections between wall and floor membranes and shall be sealed watertight with plastic cement. Each layer of fabric membrane shall be allowed to dry prior to the application of the succeeding layer. The installed fabric membranes shall be without wrinkles, buckles, kinks, or fishmouths. After all plies have been installed, the surface of the membranes shall be coated uniformly with a 1/16 inch coat of plastic cement.

(d) Flashing of pipes and ducts. Flashing flanges of the sleeves for pipes and ducts penetrating the waterproofing membranes shall be primed, allowed to dry, and stripped in with two fabric membrane collars cemented in place and to each other with plastic cement not less than 1/16 inch thick for each coating. Each collar shall be allowed to dry prior to the application of the succeeding collar. The collars shall extend 4 and 6 inches, respectively, beyond the edge of the flanges, shall cover the flanges, and shall fit snugly against the sleeves. After the collars are installed, they shall be given a 1/16 inch thick top coating of plastic cement. Where the floor drains occur in waterproofed slabs, similar fabric membrane collars shall be used to reinforce the openings in the membrane waterproofing. The collars shall extend 4 and 6 inches, repsectively, beyond the edge of the floor drain seepage pan. The reinforced membranes shall be neatly fitted, pressed into a heavy coat of plastic cement applied to the seepage pan flange, and shall be securely clamped to the subdrain with an approved clamping ring. Extreme care shall be taken to assure that the seepage pan weep holes are kept clear of plastic cement or other obstructing materials. The clamped membranes shall be free from wrinkles and folds and shall meet the requirements of the 24 hour ponded water test hereinafter specified.

7C4.3 Protective covering. Immediately after installation, the floor slab waterproofing shall be temporarily protected with a one inch thickness of structural fiberboard until the specified floor finish is applied. To prevent adhesion of the fiberboard to the waterproofing, a polyethylene sheet, having a minimum thickness of 4 mils, shall be provided between the two.

7C.5 Quality control. Provisions of Section entitled "Contractor Quality Control" shall apply.

7C.5.1 Samples and descriptive data. Before delivery of any waterproofing materials to the building site, the following samples and descriptive data shall be submitted for approval:

(a) Asphalt saturated asbestos felt 12 inches by width of roll: Three pieces

(b) Asphalt saturated fabric 12 inches by width of roll: 3 pieces

(c) Insulating fiberboard: Descriptive data.

(d) Asphalt: Five pounds.

(e) Asphalt primer: one quart.

(f) Plastic cement: one quart.

7C.5.2 Inspection of surfaces. Before starting the work, the contractor shall inspect all surfaces to be waterproofed and shall assure himself that they are in satisfactory condition. He shall check the location and setting of all items embedded in his work. All backing and blocking and perimeter framing for recessed items shall be in place as required by other trades. All conduit, piping, and other required roughing in shall be complete. The Contractor shall notify the Government of any serious defects or conditions that will prevent a satisfactory application. Application shall not be started until such defects and conditions have been corrected.

7C.5.3 Supervision. Waterproofing shall be applied under the direction of experienced supervision and by workmen experienced in the application. The Contractor shall coordinate the waterproofing operations with other phases of th e work to prevent staining or damaging of finished work.

7C.5.4 Test for surface dryness. The surface to which felts are to be applied shall not be considered dry, and application shall not be started until the following conditions have been met. A minimum of one pint of asphalt shall be used on a representative area:

(a) Foaming. When applied to the surface to which felts are to be applied, the asphalt, heated to 350 to 425 degrees Fahrenheit, shall not foam upon contact with the surface.

(b) Strippability. After the asphalt used in the foaming-test application has cooled to ambient temperatures, the coating shall be tested for adherence. Should any portion of the sample be readily stripped clean from the surface, the surface shall not be considered dry and application shall not be started. Should rain occur during application, the work shall be stopped and shall not be resumed until the surface has been tested by the methods above and found dry.

7C.5.5 Test of membrane waterproofing. Prior to concealment, membrane waterproofing on horizontal surfaces shall be covered with 4 inches of ponded water for 24 hours to test watertightness. Careful measurement shall be made of the water level at the beginning and end of the 24 hour period. In the event that the waterlevel falls, the water shall be removed and the

waterproofing membrane thoroughly dried and inspected. Repairs or replacement shall be made as directed, after which the test shall be repeated. Work shall not proceed before approval and acceptance.

7C.5.6 Contractor inspection. Waterproofing operations and testing shall be conducted in the presence of the Contractor's Quality Control representative. All materials shall have been approved before any work is started.

---oOo---

SECTION 7D EXTERIOR MEMBRANE WATERPROOFING AND DAMPPROOFING

7D.1 Applicable publications. The following publications of the issues listed below, but referred to elsewhere by basic designation only, form a part of this specification to the extent indicated by the references thereto (where a number is suffixed to the specification number, it denotes the effective amendment to the specification):

(a) Federal and Military Specifications.

MIL-C-82052 Coating compound; waterproofing, mineral filled, solvent type, asphalt base.

(b) Non Government standards.

American Society for Testing and Materials (ASTM)

D41-41 Primer for use with asphalt in dampproofing and waterproofing.

D226-60 Asphalt saturated roofing felts for use in waterproofing and in construction of built up roofs.

D449-49 Asphalt for dampproofing and waterproofing.

7D.2 General requirements. Materials shall be delivered to the site in the original sealed containers or packages, bearing the manufacturer;s name and brand designation. Where materials are covered by a referenced specification, the containers or packages shall bear the specification number, type, and class as applicable.

7D.3 Materials.

7D.3.1 Asphalt primer shall conform to ASTM Specification D41.

7D.3.2 Asphalt shall be type A conforming to ASTM specification D449.

7D.3.3 Coating compound for cold applied dampproofing shall conform to specification MIL-C-82052.

7D.3.4 Asphalt saturated felts shall be 15 pound rag felts conforming to ASTM specification D226.

7D.4 Application.

7D.4.1 Surface preparation. Surfaces to which waterproofing and dampproofing are to be applied shall be smooth, dry and free from holes and

and projections. Immediately before application of waterproofing and damp-proofing, surfaces shall be cleaned, and approved. Application will not be permitted in wet weather or when air temperature is below 40 degrees Fahrenheit.

7D.4.2 Primer shall be applied by one uniform brush coat of approximately one gallon per 100 square feet of surface.

7D.4.3 Membrane waterproofing for concrete slabs on grade and elevator pit at treatment plant shall consist of three layers of saturated felts, and moppings of hot bitumen as specified hereinafter. Waterproofing on vertical surfaces shall terminate in reglets, or by other approved methods which shall maintain waterproofing in applied position. Waterproofing on horizontal surfaces shall extend up vertical surfaces, where practicable, not less than 18 inches. All pipes, pipe sleeves, and other similar projections through the membrane shall be made watertight, and all flashings and similar construction shall be mopped thoroughly in place. Waterproofing shall be applied a ply at a time, in such a manner that each ply or layer is complete in itself. Each sheet of felt shall be lapped not less than 2 inches at the sides and 4 inches at the ends; side and end laps shall be staggered not less than 18 inchesin relation to the laps in the preceding ply; when practicable, the waterproofing shall be applied so that the direction of water flow is over and not against the laps. Each ply shall be laid in and coated with hot asphalt using not less than 20 pounds per 100 square feet for each mopping. Asphalt saturated felt shall be used with asphalt. Asphalt shall not be heated above 400 degrees Fahrenheit. Thermometers shall be used to check the temperatures during the heating operation to insure that the maximum temperatures specified are not exceeded. Each strip of felt shall be broomed into the hot bitumen in such a manner as to eliminate wrinkles, buckles, and kinks. Each lap shall be mopped completely so that in no place will felt touch felt. After all the specified plies of waterproofing have been installed, the entire top surface shall be coated uniformly with hot bitumen using not less than that amount specified for each ply, per 100 square feet.

7D.4.4 Protective covering for Portland cment stucco waterproofing. All exterior portland cement stucco as specified in section entitled "Stuccoing" below grade, on vertical surfaces where fill is to be placed, shall be protected by a layer of not less than 1 inch thick fiberboard applied with butted edges, in a mopping of hot asphalt. After installation, the fiberboard shall be coated with three mopped coatings of asphalt. The fiberboard shall be in the largest sizes practicable, shall have square edges, and shall be treated to resist decay and insects.

7D.4.5 Dampproofing for parapet walls shall consist of three coatings of hot applied dampproofing asphalt. Coating material shall be heated to a temperature at which it is entirely liquid, but not to exceed 375 degrees Fahrenheit. Application shall be uniform and applied at the rate of not less than 25 pounds per 100 square feet per coat.

(a) Back fill, as specified in the section entitled "EARTHWORK" shall be tamped into place immediately after the last mopping is applied and approved.

7D.5 Quality control. Provisions of Section entitled "Contractor Quality Control" shall apply.

7D.5.1 Test and test reports. The testing requirements stated herein or incorporated in referenced documents may be waived provided certified copies of reports oftest from approved laboratories performed on previously manufactured materials are submitted and approved. Test reports shall be accompanied by notarized certificates from the manufacturer certifying that the previously tested material is of the same type, quality, manufacture and make as that to be furnished for this project.

7D.5.2 Test of membrane waterproofing. Prior to concealment, membrane waterproofing on horizontal surfaces shall be covered with 4 inches of ponded water for 24 hours to test watertightness.

---o0o---

SECTION 7E CALKING

7E.1 Applicable publications. The following publications of the issues listed below, but referred to elsewhere by basic designation only, form a part of this specification to the extent indicated by the references thereto (where a number is suffixed to the specification number, it denotes the effective amendment to the specification):

(a) Federal and Military Specifications.

TT-S-00227d Sealing compound; rubber base, two component (for calking, sealing, and glazing in building construction).

TT-S-00230b Sealing compound, synthetic rubber base, single component chemically curing (for calking, sealing, and glazing in building construction).

7E.2 General requirements. Calking shall be provided in all open joints and cracks exposed on the exterior of the buildings, in all areas requiring sealing with calking material to provide water and weathertight construction, and at all joints indicated to receive calking or sealant.

7E.3 Materials shall be delivered to the job in the manufacturer's original unopened containers, with the brands, date of manufacture and name clearly marked thereon. All materials shall be carefully handled and stored to prevent inclusion of foreign materials, or subjection to sustained temperatures exceeding 90 degrees Fahrenheit. Calking compound shall be compatible with the material to, and against, which it is applied, and shall be of the nonstaining type. Materials for calking compound more than six months old shall not be used. Color of calking compound shall be as approved.

7E.3.1 Calking compound shall be a two component polysulfide type conforming to specification TT-S-00227, Type II, Class A or a single component synthetic rubber type conforming to specification TT-S-00230, Type II, Class A.

7E.3.2 Primer for use with the calking compound shall be a quick-drying colorless, nonstaining sealer, of type and consistency recommended by the calking manufacturer. Primer shall be provided on masonry, concrete and wood surfaces, and where recommended by the manufacturer. Where a primer is recommended by the manufacturer for a specific surface material, tests related to that material shall include primer.

7E.3.3 Backstops. Glass fiber roving, or neoprene, butyl, polyurethane, vinyl or polyethylene foams free from oil or other staining elements, shall be used as backstops. Oakum and other types of absorptive materials shall not be used as backstops.

7E.4 Samples. Before calking work is started, a sample opening of each type of joint shall be calked where directed. The sample shall show the workmanship, bond and color of calking material, as specified or selected for the work. The workmanship, bond, and color of the calking work throughout the project shall match that of the approved sample joint.

7E.5 Surface preparation. Surfaces against which primer and calking are to be applied shall be clean, dry to the touch, free from frost, moisture grease, oil, wax, lacquer, paint or other foreign matter that would tend to destroy or impair adhesion. All joints shall be enclosed on three sides. Where grooves for adequate calking have not been provided, suitable grooves shall be cleaned out to the depth of 1/2 inch and ground to a minimum width of 1/4 inch without damage to the adjoining work. No grinding shall be required on metal surfaces. Where necessary to provide a suitable backstop, the back of joints over 1/2 inch in depth shall be packed tightly with an approved backstop material to within the depth of 1/2 inch from the surface. All loose particles of mortar shall be cleaned out just prior to calking and grooves given a uniform coating of primer. Primer shall not be applied to exposed finish surfaces.

7E.6 Application. The calking compound shall be applied in accordance with the manufacturer's printed instructions, using a gun with nozzle of proper size to fit the joint width. The compound shall be forced into grooves with sufficient pressure to fill the grooves solidly. Calking shall be uniformly smooth and free of wrinkles, and unless indicated otherwise, shall be tooled as necewsary and left sufficiently convex to result in a flush joint when dry. Where the use of gun is impracticable, suitable, hand tools may be used. The calking compound shall not be applied to joints when the air temperature is bleow 50 degrees Fahrenheit, or when it appears probable that temperatures below 50 degrees Fahrenheit will be encountered before the calking has set. The calking compound shall not be used when it becomes too gelled to be discharged in a continuous flow from the gun. Modification of the calking compound by addition of liquids, solvents, or powders shall not be permitted. Only the amount of calking whcih can be installed within four hours shall be mixed, but at no time shall this amount exceed 5 gallon unit increments. Calking around openings shall include the entire perimeter of each opening.

7E.7 Protection and cleaning. Areas adjacent to joints to be filled shall be protected from smearing by the compound. Paper masking tape may be used for this purpose if removed 5 to 10 minutes after the joint section is filled. Fresh compound that has accidentally been smeared on masonry shall be scraped off immediately and rubbed clean with methyl ethyl ketone, toluene or a similar solvent. Upon completion of calking all remaining smears, stains, and other soiling resulting therefrom shall be removed and work left in a clean and neat condition.

7E.8 Testing. When calking material in excess of 15 gallons is required, notarized test certificates from an approved testing laboratory shall be submitted and approved on each lot of material to show compliance with all tests required in specification TT-S-00227 or TT-S-00230. The testing requirements stated herein may be waived when calking material is required in quantities less than 15 gallons, provided certified copies of reports of tests from approved laboratories performed on previously manufactured materials are submitted and approved to show compliance with specification TT-S-00227 or TT-S-00230, and provided the test reports are accompanied by notarized certificates from the manufacturer certifying that the previously tested material is of the same type, quality, manufacture and make as that to be furnished for this project.

---oOo---

DIVISION 8 DOORS, WINDOWS AND GLASS

SECTION 8A. Metal Doors and Frames
8B. Builder's Hardware
8C. Metal Windows
8D. Glass and Glazing
8E. Metal Wall Louvers
8F. Aluminum Entrances, Doors and Frames
8G. Aluminum Curtainwalls

SECTION 8A. METAL DOORS AND FRAMES

8A.1 Applicable publications. The following publications of the issues listed below, but referred to elsewhere by basic designation only, form a part of this specification to the extent indicated by the references thereto (where a number is suffixed to the specification number, it denotes the effective amendment to the specification).

(a) Bureau of Yards and Docks/NAVFAC Specifications.

32Ye Metal doors

8A.2 General Requirements. The work includes metal doors and frames. Metal doors and frames shall conform to the applicable requirements of specification 32Y, except as specified otherwise herein. Doors and frames shall be sizes and types indicated or specified. Structural steel frames and hinged aluminum doors and frames are specified in other sections.

8A.2.1 Hollow pressed steel frames shall be modified where necessary to suit actual thickness of walls and partitions and to obtain the finished conditions indicated. They shall be the full welded unit type; all corners shall be mitered, welded and full length of the joints, and ground smooth. Frames shall be reinforced properly and as necessary for the proper installation of hardware. Angle clips shall be welded to the bottom of each jamb for anchorage to the floor. Jambs shall be anchored to the floor with not less than two fastenings and to walls and partitions with approved strap anchors spaced not more than 2 feet on centers. All anchors and bolts shall be concealed where practicable.

8A.3 Hollow metal Doors.

8A.3.1 Type II doors shall be provided at all door locations except doors #101, 102 and 112.

8A.3.2 Hollow metal doors, except as specified otherwise herein, shall conform to the applicable requirements of Specification 32Y for Type II.

8A.4 Galvanized and shop primed finish. In addition to the surfaces stipulated in specification 32Y, all hollow metal doors and frames shall be provided with a galvanized and shop primed finish.

8A.4.1 Louvers for exterior doors shall be provided with insect screen of 18 by 16 mesh aluminum.

8A.5 Quality control. Provisions of Section entitled "Contractor Quality Control" shall apply.

8A.5.1 Tests and test reports. The testing requirements stated herein or incorporated in referenced documents may be waived, provided that certified copies of reports of tests from approved laboratories performed on previously manufactured materials are submitted and approved. Tests reports shall be accompanied by notarized certificates from the manufacturer certifying that the previously tested material is of the same type, quality, manufacturer and make as that to be furnished for this project.

---oOo---

SECTION 8B. BUILDER'S HARDWARE

8B.1 Applicable publications. The following publications of the issues listed below, but referred to elsewhere by basic designation only, form a part of this specification to the extent indicated by the references thereto (where a number is suffixed to the specification number, it denotes the effective amendment to the specification):

(a) Federal and Military Specifications.

FF-H-106a(1)(INT 9) Hardware, Builder's ; Locks and Door trim
FF-H-00111b Hardware, Builder's; Shelf and miscellaneous
FF-H-116c(4) Hinges, Hardware, Builders's
FF-H-121c Hardware, Builder's, Door closing devices

(b) Non Government Specifications and Standards

ASTM-A167 Corrosion resisting chromium nickel steel plate, sheet and strip.

8B.2 General requirements. All builder's hardware shall be provided as indicated, specified, or necessary to completely equip the Treatment Plant and Reservoir Pump house, except that hardware for aluminum entrance doors is specified in section "Aluminum Entrances". Hardware for well house doors is specified in section entitled "Prefabricated Metal Buildings". Any hardware that is necessary to completely equip the building is not definitely specified or indicated shall be provided in the size, type and quality specified for similar usage elsewhere in the building or shall be as needed to satisfy operational requirements. Types, finishes, and trim specified herein are taken from the applicable federal specifications. All hardware of the same type shall be furnished by one manufacturer. Hardware for application on metal shall be made to standard templates, and the templates shall be furnished to the manufacturer of metal doors and metal door frames. All modifications to hardware, required by reason of construction characteristics, shall be such as to provide the specified operative or functional features. Items of hardware shall be delivered to the job site in their original individual containers, complete with the necessary appurtenances including screws, keys, and instructions. Each container shall be marked with the manufacturer's name and catalogue number as they appear in the hardware schedule.

8B.3 Hardware items.

8B.3.1 Hinges shall conform to the applicable requirements of specification FF-H-116, except as specified otherwise herein. Loose pin hinges for doors with reverse bevel locks or latches shall be constructed in a manner that will eliminate removal of the pins when the doors are in a closed position. Types of hinges shall be specified hereinafter.

8B.3.2 Lock and latch sets shall conform to the applicable requirements of specification FF-H-106, except as specified otherwise herein. The series selected shall, as far as practicable, be used through out the project. All lock and latch sets of a series shall be the products of a single manufacturer: Lock cylinders shall have not less than five pin tumblers. Types and trim for locksets, latches, and accessories shall be as specified hereinafter.

8B.3.3 Door closers shall conform to the applicable requirements of specification FF-H-121, except as specified otherwise herein. Types, sizes styles, arms and finishes for the closers shall be as specified hereinafter or as necessary for proper operation of door.

8B.3.4 Shelf and miscellaneous hardware shall conform to the applicable requirements of specification FF-H-00111, except as specified otherwise herein. Types, sizes, and other details shall be as specified hereinafter.

8B.3.5 Kick plates. The width of all plates shall be two inches less than the width of the door and eight inches high.

8B.3.6 Weatherstripping shall be provided at heads and jambs of doors specified hereinafter and shall provide a completely weathertight installation. Weatherstripping shall be fabricated of stainless steel strip not less than 0.005 inch thick, alloy 302, spring temper, conforming to ASTM Specification A167. Design of the weatherstripping shall be of the "V" cushion type and configurations and sizes shall be similar to Zero Weather Stripping Co., Inc. No. 19W, Accurate Metal Weather Strip Co., Inc. No. 119W or Chamberlin Company of America No. 182. Fastening of weatherstripping to metal door frames shall be with stainless steel self-tapping screws at 1-1/2 inches on centers. Installation of weatherstripping shall permit complete closure of doors and shall cause no binding of the doors.

8B.3.7 Thresholds shall be provided at doors specified hereinafter and shall be of the following types:

(a) Thresholds at exterior doors shall be of extruded aluminum 6063-T5 alloy with satin finish. Except as otherwise indicated thresholds shall be between 4 and 5 inches wide and shall have a wall thickness of not less than 0.125 inch. Thresholds shall have ribbed top surface. Thresholds at inswinging doors shall be of the water return type complete with weepholes to provide positive drainage to the exterior. All exterior doors that are to receive thresholds shall be provided with 1-3/8 by 9/16 by .083 inch extruded aluminum drip cap fastened to door with stainless steel self tapping screws at 4 inches on centers. Thresholds shall be in one piece, neatly cut to fit the particular opening and installed by setting in a bed

of calking compound as specified in section entitled "Calking" and then anchored in placed with approved expansion shields and 1/4 inch in diameter stainless steel screws, one at each end and intermediately spaced at not more than 12 inches on centers.

8B.4 Fasteners of the proper type, quality, size, quantity, and finish shall be supplied with the hardware. All fasteners exposed to weather shall be of non ferrous metal and shall match the trim finish as close as possible.

8B.5 Finishes. All hardware shall have US26D satin chrome finish.

8B.6 Keying System. A master keying system shall be provided. The system shall be designed to provide the highest possible security consistent with the type of system being used. Any pertinent keying requirement not specified herein shall be as directed.

8B.6.1 Keys shall be supplied as follows:

Locks, group, or sets of locks	Quantity of keys
Each cylinder lock (except keyed alike locks)	2
Each keyed alike group	2
Each master keyed set	2

Each change key shall be stamped with change number and set symbol, and each master key shall be stamped with set symbol as applicable.

8B.7 Application of hardware. All hardware shall be installed in a neat, workmanlike manner following the manufacturer's instructions. Fasteners, supplied with the hardware, shall be used to secure the hardware in place. Machine screws, set in expansion shields shall be used for securing hardware to concrete or solid masonry surfaces. Toggle bolts shall be used to anchor hardware to hollow masonry. Thru bolts shall be used where specified or where necessary for satisfactory installation. After application, hardware shall be protected from paint, stains, blemishes, and damage until acceptance of the work. All hardware shall be properly adjusted and checked out in the presence of a government representative to see that the hinges, locks, latches, bolts, holders, and closers operate properly. After hardware is checked keys shall be tagged, identified, and delivered to the Officer in Charge. Any errors in cutting, or fitting, or any damage to adjoining work shall be repaired as directed. Application of door closers, surface butts and panic hardware on the surface of metal doors other than kalamein doors shall be accomplished with machine bolts through 18 gage metal sleeve spacers. Application of door closers, surface butts and panic hardware on kalamein doors shall be accomplished with through bolts and grommet nuts.

8B.7.1 Location of hardware on hinged doors shall be as follows, unless indicated or specified otherwise:

(a) Locks. Knobs shall be located so that centerline of the strike is 40-5/16 inches (nomina) above the finished floor.

(b) Push plates shall be located so that center line of the push plate is 45 inches (nominal) from the finished floor.

(c) Pull plates shall be located so that center line of the pull is 42 inches (nominal) from finished floor.

(d) Hinges shall be located as follows:

Top hinge:	Not over 9-3/4 inches from the inside of frame rabbet at head to center line of hinge
Bottom hinge:	Not over 10-3/8 inches from finished fllor to center line of hinge.
Center hinge:	Midway between top and bottom hinge.

(e) Kick plates shall be located on the push side of single acting doors.

8B.8 Hardware shall be provided as follows:

EXTERIOR DOORS

Door 101 to have:

1 pair master keyed cylinders
Balance of hardware furnished by aluminum door supplier

Door 103 to have:

1-1/2 pair butts	T2106 4-1/2 x 4-1/2 NRP
1 lockset	86B - 5
1 closer	3001 size IV with Type R bracket
1 overhead holder	1161
1 kick plate	1225
1 threshold	
1 set weatherstripping	
1 drip cap	

Doors 104, 105, 114, to have:

1-1/2 pair butts	T2106 4-1/2 x 4-1/2
1 lockset	86DW - 5
1 closer	3001 size IV with Type R bracket
1 O.H. Holder	1161
1 kick plate	1225
1 threshold	
1 set weatherstripping	
1 drip cap	

Door 106, each to have:

1-1/2 pair butts	T2106 4-1/2 x 4-1/2
1 lockset	86B - 5
1 closer	3001 size IV
1 kick plate	1225
1 stop	1329 E
1 threshold	
1 set weatherstripping	
1 drip cap	

Door 201, each to have:

1-1/2 pair butts	T2106 4-1/2 x 4-1/2
1 lockset	86B - 5
1 closer	3001 H size V with Type R bracket
1 O.H. Holder	1161
1 kick plate	1225
1 threshold	
1 set weatherstripping	
1 drip cap	

Pair doors A, to have;

3 pair butts	T2106 4-1/2 x 4-1/2
1 lockset	86DW - 5
2 flush bolts	1045
2 O.H. holders	1161
1 threshold	
1 set weatherstripping	
1 drip cap	

INTERIOR DOORS

Doors 102, 112, each to have;

1 pair master keyed cylinders

Balance of hardware furnished by aluminum door supplier.

Doors 107, 108, 109, 110, 206, 208, 210 each to have:

1-1/2 pair butts	T2106 4-1/2 x 4-1/2
1 lockset	86A - 5
1 kick plate	1225
1 stop	1330E

Doors 11, 209, each to have:

1-1/2 pair butts	T2106 4-1/2 x 4-1/2
1 latchset	86N-5
1 closer	3001 size 111
1 kick plate	1225
1 stop	1330 E

Doors 202, 203, 204, 205, each to have:

1-1/2 pair butts	T2106 4-1/2 x 4-1/2
1 push plate	465 16 x 4
1 door pull	455 16 x 4
1 closer	3001 size 111
1 kick plate	1225
1 stop	1330E

8B.9 Quality control. Provisions of Section entitled "Contractor Quality Control" shall apply.

8B.9.1 Samples and sample list. As soon as practicable after award of contract and before any builders' hardware is delivered to the job site, a sample list, in quadruplicate, listing each item of builders' hardware shall be submitted for approval. The sample list shall be submitted in the following form:

Item No. & File Designation	Hardware Item	Federal Specif. Type No.	Mfrs. Name and Catalog No.	UL Mark (If fire rated)
1 (F)				
2 (NF)				

The symbol (F) will indicate that the sample is listed in NAVFAC TS-8H17 entitled "List of Builders' Hardware Samples on File in Washington, D.C.", and that a sample is on file at the Federal Construction Products Center, General Services Administration Regional Office Building, 7th and D Streets, S.W., Washington, D. C. 20407. Samples on file are not required to be submitted with the exception that samples of modified items shall be submitted. Affidavits shall be submitted certifying that items designated (F) are equal in all respects to the approved samples on file in Washington, D.C. The symbol (NF) will indicate that there is no sample of the item on file and submission of the sample is required. The submitted samples shall be tagged and marked with the manufacturer's name and catalog numbers.

8B.9.2 Hardware schedule. After approval of the samples and sample list and before hardware is delivered to the job site, a hardware schedule shall be submitted and approved.

8B.9.3 Keying System shall be submitted and approved prior to manufacture of locks.

8B.10 Testing requirements. Tests specified in referenced specifications for locks and latch sets shall be conducted by an approved nationally recognized independent testing agency. Three notarized copies of laboratory test reports shall be submitted and approved before delivery of hardware to the site.

---oOo---

SECTION 8C METAL WINDOWS

8C.1 Applicable publications. The following publications of the issues listed below, but referred to elsewhere by basic designation only, form a part of this specification to the extent indicated by the references thereto (where a number is suffixed to the specification number, it denotes the effective amendment to the specification):

(a) Bureau of Yards and Docks/NAVFAC Specifications.

10Ye Metal windows (steel and aluminum)

8C.2 General requirements. Metal windows and frames shall conform to the applicable requirements of specification 10Y, except as specified otherwise herein, and shall be of the types and sizes, indicated or specified. Glass, glazing, and calking are specified in other sections. Windows shall be of aluminum.

8C.3 Glazing provisions. Extruded snap in metal glazing beads shall be provided at all windows.

8C.4 Mullions shall be provided between multiple window units where indicated or necessary. Mullions shall be designed to withstand a uniform wind load of 20 pounds per square foot of window area without deflecting more than 1/175 of the span.

8C.5 Shop finishes.

8C.5.1 Shop finish on all aluminum members shall be a caustic etch to a uniform satin finish, with two spray coats of methacrylate lacquer.

8C.6 Project windows shall conform to the requirements for heavy custom type P-A2H aluminum windows.

8C.7 Insect screens shall be provided for ventilators of all windows.

8C.8 Hardware for all windows shall be nickel bronze alloy with US-25 D brush finish.

8C.9 Weatherstripping shall be provided at all ventilators, of double ployvinyl, at entire perimeter of all windows.

8C.10 Quality control. Provisions of Section entitled "Contractor Quality Control" shall apply.

8C.10.1 Test and test reports. The testing requirement stated herein or incorporated in referenced documents may be waived, provided certified copies of reports of test from approved laboratories performed on previously manufactured materials are submitted and approved. Test reports shall be accompanied by notarized certificates from the manufacturer certifying that the previously tested material is of the same type, quality, manufacture, and make as that to be furnished for this project.

SECTION 8D GLASS AND GLAZING

8D.1 Applicable publications. The following publications of the issues listed below, but referred to elsewhere by basic designation only, for a part of this specification to the extent indicated by the references thereto (where a number is suffixed to the specification number, it denotes the effective amendment to the specification):

(a) Federal Specifications.

DD-G-451c Glass, plate, sheet, figured (corrugated and float, for glazing mirrors and other uses).
TT-G-00410c Glazing compound sash (metal) for bedding and face glazing.

8D.2 General Requirements. Glazing rabbets shall be rigid, true, plumb, square, properly primed, clean, dry, and dust free before glazing work is started. Protective coatings shall be removed from metal rabbets with a solvent. Solvent used on aluminum sash shall not stain or etch the finish. Glazing work shall not be started until the outdoor temperature is above 40 degrees Fahrenheit on a rising thermometer, unless approved provisions are made to warm the glass and rabbet surfaces. Sufficient ventilation shall be provided to prevent condensation of moisture on glazing work during installation. Glazing work shall not be performed during damp or rainy weather. Sash shall be glazed in a closed position and shall not be operated until the glazing compound has set. Glazing materials shall be mixed uniformly without the addition of thinners or other materials, and shall be used while still fresh.

8D.3 Materials. Each light shall have the manufacturer's label showing type, thickness, and quality of glass. Labels shall not be removed until the glazing work has been approved. Putty and glazing compounds shall be delivered to the site in unopened containers, labeled plainly with the manufacturer's names and brands.

8D.3.1 Glass shall conform to the applicable requirements of specification DD-G-451 and shall be provided in locations indicated or specified.

(a) Plate or float glass shall be type 1,class 1, quality q3, 1/4 inch thick.

(b) Sheet glass, type 11, class 1, quality q6, shall be provided for glazing openings not indicated or specified otherwise. Single strength glass shall be provided for sizes up to and including 60 united inches; double strength, for sizes up to 80 united inches; 3/16 inch thick glass for sizes up to 100 united inches.

(c) Wire glass shall be type III, Class 1, kind A, form 1, mesh M3, not less than 7/32 inch thick.

8D.3.2 Setting materials.

(a) Glazing compound for glazing metal sash and doors shall conform to specification TT-G-410. Glazing compound for aluminum sash and doors shall be aluminum colored, and shall be a type of compound which does not require painting. Other glazing compound shall be grey or a neutral color.

(b) Vinyl or synthetic rubber gaskets of the type recommended by the window or door manufacturer shall be provided for glazing of aluminum windows and doors. The gasket shall be compressed not less than 15 percent when installed.

(c) Glazing beads or stops and all screws or otherparts necessary to install them shall be furnished with the sash and doors.

8D.4 Installation.

8D.4.1 Clearances. Edge clearance for glass shall be not less than 1/8 inch for steel frames, and not less than 3/16 inch for aluminum frames. The minimum edge clearance shall be not less than the thickness of the glass. The face clearance of glass from rabbets or stops shall be not less than 1/8 inch. Clearances shall be maintained for all lights larger than 50 united inches (i.e., when the sun of the width and length exceeds 50 inches), with setting blocks at the sill and centering shims inside andout of all four edges.

8D.4.2 Glazing. Sufficient glazing compound or putty shall be applied to the entire perimeter of the rabbet. Two setting blocks shall be placed at th quarter points from each end. The glass shall be pressed into the rabbet without springing or forcing, and centered so that the compound completely covers the glass in the rabbet, allowing 1/8 inch minimum back putty. Glass in doors and in sash provided with stops shall be set with stops along all edges, and a proper bed of compound shall be provided between the glass and the stops.

8D.5 Cleaning. Upon completion of the Water Treatment Plant and Reservoir Pumping Station cracked, broken, or imperfect glass, or glass which has been set improperly, shall be replaced, and all glass shall be washed clean.

8D.6 Quality control. Provisions of Section entitled "Contractor Quality Control" shall apply.

8D.6.1 Test reports. The testing requirements stated herein or

incorporated in the referenced documents may be waived, provided that certified copies of reports of tests from approved laboratories performed on previously manufactured materials are submitted and approved. Test reports shall be accompanied by notarized certificates from the manufacturer certifying that the previously tested material is of the same type, quality, manufacture, and make as that to be furnished for this project.

---oOo---

SECTION 8E. METAL WALL LOUVERS

8E.1 Applicable publications. The following publications of the issues listed below, but referred to elsewhere by basic designation only, form a part of this specification to the extent indicated by the references thereto (where a number is suffixed to the specification number, it denotes the effective amendement to the specification):

(a) Federal and Military Specifications.

QQ-S-775d Steel sheets, carbon, zinc coated.

8E.2 General requirements. The work includes metal wall louvers Louvers in metal doors are specified in section entitled "Metal Doors and Frames".

8E.3 Stationary wall louvers shall be of the sizes and free areas indicated. Exterior wall louvers shall be of weatherproof type and shall be provided with 1/2 by 1/2 inch mesh bird screen in reversible frame. Screen frames shall be installed by means of clips in such manner that they can be removed readily for cleaning and repairing. Screen shall be installed on the interior face of the louvers, except that when ducts or adjustable dampers are to be connected to the louvers, the screens shall be installed on the exterior face. Flanges shall be provided on the interior face of louver frames where louvers are to be connected to ducts or mechanically operated dampers.

8E.3.1 Extruded aluminum louvers. Louvers indicated as stationary wall louvers shall be fabricated of extruded aluminum 6063-T5 aluminum with a wall thickness of not less than .081 inch. All aluminum components shall be provided with mill finish. Bird screen shall be of 0.047 inch in diameter aluminum wire in extruded aluminum frame. All screws and other fasteners shall be of stainless steel.

8E.4 Automatic gravity shutters, shall be of the sizes indicated, and shall be for wall mounting gravity exhaust type. Frames shall be extruded aluminum, .063 inches thick. Blades shall be 24 gauge aluminum. Bearings shall be self lubricating nylong. Axles shall be 3/16 inch diameter galvanized steel rod. Blades shall be linked together with 14 gauge aluminum links with eyelet and pin bearings. Shutters 20 inches and wider shall have double linkage. Blades shall have felt silencers where blades strike when closed.

8E.4.5 Installation shall be in accordance with the manufacturers published instructions except as indicated otherwise. All exposed screw heads shall be of the countersunk type.

---oOo----

SECTION 8F ALUMINUM ENTRANCES, DOORS AND FRAMES

8F.1 Applicable publications. The following publications of the issues listed below, but referred to elsewhere by basic designation only, form a part of this specification to the extent indicated by the references thereto (where a number is suffixed to the specification number, it denotes the effective amendment to the specification).

(a) Bureau of Yards and Docks/NAVFAC Specifications.

32Ye Metal Doors

(b) Federal Specifications.

FF-H-106a(1) (INT.9)	Hardware, builders'; locks and door trim.
FF-H-001111b	Hardware, builders'; shelf and miscellaneous
FF-H-116c(4)	Hinges, hardware, builders'
FF-H-121c	Hardware, builders',door closing devices.

8F.2 General requirements. The work includes aluminum entrances, doors, frames, sidelights, transoms and enclosures, which shall be custom built to sizes and details indicated and shall be designed for use at exterior and interior locations as indicated. Doors shall be provided complete with hardware. Materials and workmanship shall conform to the application provisions of specification 32Y except as specified otherwise herein.

8F.3 Doors shall be full glazed narrow stile and rail type.

8F.4 Finish. All exposed aluminum surfaces shall be satin finish anodized.

8F.5 Hardware. Fasteners for securing hardware shall be of stainless steel.

8F.5.1 Butts shall conform to specification FF-H-116, type T2102, aluminum, 4-1/2 by 4-1/2 inches, and shall be provided for all door leaves 3 per leaf.

8F.5.2 Closers. Shall conform to specification FF-H-121, type 3001H, size IV, rack and pinion construction, streamline design with aluminum alloy case. One closer shall be provided for each door lead.

8F.5.3 Deadlocks shall be provided at doors 101, 102 and 112. Deadlocks shall conform to specification FF-H-106, type US26D, except that cast and backset of cylinder shall be modified as approved for use with narrow stile aluminum doors, and except that turn knob shall withdraw but shall not project the dead bolt. Cylinders shall be master keyed to other building hardware.

8F.5.4 Stops shall conform to FF-H-00111, type 1320E or 1328E to suit the particular installation. One stop shall be provided for each door leaf and shall have a US26D finish.

8F.5.5 Combination pull and push bars shall be provided on both sides of leaves of doors 101, 102, and 112. Bars shall be of anodized aluminum or stainless steel, of an approved design and shall be of such length as to be secured at both side rails of the door leaf.

8F.5.6 Thresholds shall be provided at doors 101 and 112. Thresholds shall be of extruded aluminum 6063-T5 alloy not less than 1/8 inch thick, shall have a ribbed top surface and unless indicated otherwise shall be 4 inches wide. Threshold shall be anchored in place with 1/4 inch countersunk machine screws in expansion shields spaced not more than 12 inches on centers.

8F.5.7 Weatherstripping shall be provided at all exterior doors. Weatherstripping shall be provided at jambs, heads, meeting rails and bottoms, and shall be of silicone treated wool pile inset into the aluminum.

8F.6 Quality control. Provisions of Section entitled "Contractor Quality Control" shall apply.

8F.6.1 Test and test reports. The testing requirement stated herein or incorporated in referenced documents may be waived, provided certified copies of reports of test from approved laboratories performed on previously manufactured materials are submitted and approved. Test reports shall be accompanied by notarized certificates from the manufacturer certifying that the previously tested material is of the same type, quality, manufacture and make as that to be furnished for this project.

8F.6.2 Shop drawings and catalog data shall be submitted and approved before delivery of any of the materials to the site.

---oOo---

SECTION 8G ALUMINUM CURTAINWALLS

8G.1 Scope of work. This section includes the specifications for the furnishing and installing of all aluminum curtainwalls, aluminum louvers, and aluminum door frames as shown.

8G.2 Applicable publications. The following publications of the issues listed below, but referred to elsewhere by basic designation only, form a part of this specification to the extent indicated by the references thereto (where a number is suffixed to the specification number, it denotes the effective amendment to the specification):

(a) Bureau of Yards and Docks/NAVFAC Specification.

10Ye Metal windows.

(b) Non Government documents.

American Society for Testing and Materials (ASTM)

B136-63T Method of Test for Resistance of Anodically Coated aluminum to Staining by Dyes
B137-45 Method of Test for Weight of Coating on Anodically Coated Aluminum
B244-62T Method of Measuring Thickness of Anodic Coatings on Aluminum with Eddy Current Methods

Porcelain Enamel Institute (PEI)

Color Guide of Architectural Procelain Enamel.

S-100(65) Specification for Architectural Porcelain Enamel on Steel for Exterior Use.

8G.3 Shop finish on aluminum. After fabrication, all surfaces of curtainwall components (except panels), shall be thoroughly cleaned and given a satin finish in accordance with specification 10Y.

8G.3.1 Anodized finish. Surfaces shall be provided with an anodic coating. The coating shall be aluminum color. The coating shall be applied over a satin finish, and shall be sealed. The coating shall have a minimum film thickness of 0.0007 inch and a minimum coating weight of 32 miligrams per square inch when tested in accordance with ASTM Mthods B244 and B137, respectively. The effectiveness of sealing shall be determined by testing in accordance with ASTM B136. Surfaces shall be protected from handling marks until sealers and protective coatings are applied.

8G.3.2 Protective coating shall comply with specification 10Y.

8G.4 Curtainwalls.

8G.4.1 All curtainwalls. Vertical mullions for the curtainwall shall be as indicated. Mullions are to be prepared for secure anchorage to the structure and shall be designed to withstand a 20 pound per square foot wind load. Furnish all aluminum accessory angles, plates and fastenings as indicated on the drawings.

8G.4.2 Curtainwall. The sub-frame perimeter bars shall be extruded channel section 2-1/2 inches deep minimum web thickness 1/8 inch; glazing rebate height 7/8 inch. Vertical and horizontal extruded tubular sections are to be 2 inches wide, 2 inches deep and glazing rebate is to be 7/8 inch high. The corners of the sub-frames shall be coped, mortise and tenon construction, providing rigid and secure connection. Tubular sections shall be coped, and mortised and tenoned to frame, and spigot type construction used where tube-to-tube occurs. Frames have 3/4 inch outstanding flanges for insertion of "H" type mullion covers to provide for thermal expansion and contractor. Insulated panels are to be secured outside by continuous removable bead. Frames and sub frames shall be provided with continuous vinyl insert weatherstripping.

8G.4.3 Panels shall be provided under this section by the curtainwall manufacturer. All panels shall be installed in frames in accordance with curtainwall manufacturer's approved shop drawings to insure proper installation.

(a) Panels shall be box type porcelain enamel on steel manufactured in accordance with Porcelain Enamel Institute Specification PEI:S-100(65).

(b) Face panels (exterior and interior) shall have porcelain enamel coating with minimum thickness of .007 inch on 16 gage steel.

(c) Panels shall have a styrofoam core with a maximum "U" factor of .20.

(d) Color of panels shall be from the Color Guide for Architectural Porcelain Enamel by Porcelain Enamel Institute, as approved from color samples.

8G.5 Quality control. Provisions of Section entitled "Contractor Quality Control" shall apply. Before proceeding with the manufacture, the curtainwall contractor shall submit complete shop drawings for approval. No work is to be performed until approval of these drawings and panel color is received.

8G.6 Erection. The curtainwall shall be erected in accordance with the approved shop drawings, and manufacturer's recommendations. The curtainwall shall be set plumb, square and level, and be held securely in

correct vertical and horizontal alignment. All ventilators shall be adjusted before glazing. The curtainwall joints shall be sealed with a polysulfide type sealer as specified in section entitled "Calking".

8G.6.1 Frames Sub frames, angles and plates shall be set in their correct locations as shown and shall be level, square, plumb and at proper elevations, in alignment with other work and anchored to adjacent material 2 feet on centers maximum. Frames shall be screwed in place as required to afford a fastening system for a tightly closed joint.

8G.6.2 Joints for frames, stops, beads and other moldings shall be accurately cut and fitted to result in a tightly closed joint.

8G.7 Protection and cleaning. The contractor shall prevent contamination by other trades, and maintain the curtainwall during the construction. At the conclusion of construction, the contractor shall perform final cleaning of the curtainwall to the satisfaction of the Officer in Charge.

---o0o---

DIVISION 9 FINISHES

SECTION 9A. Field Painting
9B. Tile Work
9C. Acid-Resisting Quarry Tile Floors
9D. Vinyl Asbestos Tile
9E. Acoustical Work
9F. Metal Lathing
9G. Plastering and Stuccoing

SECTION 9A. FIELD PAINTING

9A.1 Applicable publications. The following publications of the issues listed below, but referred to elsewhere by basic designation only, form a part of this specification to the extent indicated by the references thereto (where a number is suffixed to the specification number, it denotes the effective amendment to the specification):

(a) Federal and Military Specifications.

TT-C-555 Coating system, textured (for exterior and exterior masonry surfaces).
TT-E-489d(1) Enamel, alkyd, gloss (for exterior and interior surfaces).
TT-E-496b(1) Enamel, heat resisting (400° Fahrenheit), black.
TT-E-00506f Enamel, alkyd, gloss, tints and white (for interior use).
TT-E-508b Enamel, interior, semigloss, tints and white.
TT-E-543a Enamel, undercoat, interior, tints and white.
TT-L-190c Linseed oil, boiled (for use in organic coatings).
TT-P-29g Paint, latex base, interior, flat, white and tints
TT-P-30d Paint, alkyd, odorless, interior, flat, white and tints.
TT-P-86e Paint: red lead base, ready mixed.
TT-P-95a(3) Paint, rubber base (for swimming pools).
TT-P-645 Primer, paint, zinc chromate, alkyd type.
TT-S-176d Sealer, surface, varnish type, floor, wood or cork.
MIL-P-15149 Paint, stencil.
MIL-P-15328B Primer, pretreatment (Formula No. 77 for metals).
MIL-C-18480A Coating compound, bituminous solvent, coal tar base.

(b) Military Standards.

MIL-STD-101A Color code for pipelines and for compressed gas cylinders.

9A.2 General requirements. Surfaces to be painted shall be thoroughly cleaned and, unless specified otherwise, shall be dry when paint is applied. Paint shall not be applied to surfaces upon which there is frost, ice, or snow. Interior areas shall be broom cleaned and dust free before and during

the application of any painting material. Surfaces which will be inaccessible after erection shall be treated and primed prior to erection, using two coats of the designated primer. Painting materials shall be worked thoroughly into all joints, crevices, and open spaces. Samples of all finishes shall be submitted for color selection. Colors and shades of colors shall be as directed unless indicated or specified otherwise hereinafter. Succeeding coats of paint shall vary sufficiently in shade from the color of the preceding coat to permit ready identification. Finished surfaces shall be smooth, even, and free of defects. Damaged painting shall be retouched before applying succeeding coats of paint. Paints and paint materials shall be delivered in unbroken original packages bearing the manufacturer's name and brand designation. Storage of paints and paint materials and the mixing of paints shall be restricted to the locations directed. Surfaces to be imbedded in concrete and factory finished materials shall not be field painted under this section except that factory-finished surfaces which are damaged during installation shall be restored to their original condition. Reduction of paints to proper brushing consistency shall be accomplished by adding fresh paint; except that when thinning is mandatory for the types of paint being used, written permission to use thinners shall be obtained from the Officer in Charge. The written permission shall include quantities and types of thinners to use. Thinners shall not be permitted upon the job sites unless written permission for thinning has been given by the Officer in Charge.

9A.3 Sampling and testing. Sampling and testing of paint as specified hereinafter shall be provided wherever quantities of paint of one type in excess of 50 gallons are required. Paints proposed for use shall be sampled from material delivered to the job site and tested by a recognized, independent testing laboratory, approved by the Officer in Charge, at the Contractor's expense. Paint proposed for use shall be stored on the project site in sealed and labeled containers, sufficiently in advance of need to allow a minimum of 30 days for testing. Upon notification by the Contractor that the material is at the site, a one quart sample of each batch shall be obtained by random selection from the sealed containers by the Officer in Charge. Duplicate samples shall be furnished to the Officer in Charge. Adequate mixing prior to sampling shall be accomplished to insure a uniform, representative sample. A batch is defined as that quantity of material processed at one time and identified by a number intended use, and quantity involved. Testing shall include all tests specified in the standard specification for the paint and any requirements specified herein, specifically including composition of both pigment and vehicle, and quantitative and qualitative requirements for mixed paint. Other samples will be taken from paint beings used on the job and test by the Government.

9A.4 Preparation of surfaces. All dirt, rust, scale, splinters, loose particles, diintegrated paint, grease, oil and other deleterious substances shall be removed from all surfaces which are to be painted or otherwise finished. Putty and calking compound shall be allowed to set one week before painting.

9A.4.1 Concrete and masonry. Dirt, fungus, grease, and oil shall be removed prior to application of paint by washing the surfaces with a solution composed of from 2 to 8 ounces of trisodium phosphate per gallon of hot water and then rinsing thoroughly with fresh water. Efflorescence shall be removed from concrete and masonry surfaces by scraping, wire brushing, and washing with a 5- to 10- percent, by weight, solution of muriatic acid and then washing thoroughly with fresh water, removing all traces of the acid. The trisodium phosphate and muriatic acid solutions shall be within the ranges specified and shall be of strengths to perform their functions properly. Glaze and all loose particles and scale shall be removed by wire brushing. All concrete and masonry surfaces to be painted with other than cement water paint and chlorinated rubber base paint shall be given a neutralizing treatment and consisting of 2 pounds of zinc sulphate in one gallon of warm water. The neutralizer shall be applied liberally and allowed to dry, after which the surfaces shall be rinsed thoroughly with clean water and allowed to dry for not less than 48 hours before paint is applied.

9A.4.2 Cloth coverings on insulation shall be given one coat of glue sizing before paint is applied.

9A.4.3 Metal surfaces to be painted, including aluminum, brass, copper, and zinc coated surfaces and unprimed steel and iron surfaces, except surfaces subject to temperatures in excess of 120 degrees Fahrenheit and smokestacks, immediately after being cleaned, shall be given on coat of pretreatment coating conforming to specification MIL-P-15328 applied to a dry film thickness of 0.3 to 0.5 mil. Aluminum surfaces to be painted shall be treated with a hot 10 percent solution of chromic acid for 3 to 5 minutes and throughly rinsed with clean warm water prior to application of the pretreatment coating. Primer paint shall be applied over the pretreatment coating as sppm as practicable after the coating has dried.

9A.5 Workmanship and application.

9A.5.1 Application of paints other than acrylic emulsion paint. The finished surfaces shall be free from runs, drops, ridges, waves, laps, brush marks, and variations in colors. Paints and varnishes shall be applied carefully with good, clean brushes, except that areas made inaccessible to brushing by ducts and other equipment may be sprayed, and except spray painting will be permitted for other than the first coat of paint on any surface. Spray equipment shall be the airless type. The work shall be so conducted as to avoid contamination on other surfaces and public and private property in the area; any damage thereto shall be made good by the contractor at his expense. Sufficient time shall be allowed between coats to permit thorough drying, and each coat shall be in proper condition to receive the next coat. Each coat shall be sufficiently heavy to cover completely the preceding coat or surface; there shall be an easily perceptible difference in shades of successive coats of paint. Exterior paint shall not be applied

when the temperature of the air or of the surface is below 45 degrees Fahrenheit or above 95 degrees Fahrenheit unless otherwise directed. Interior paint may be applied at any time, provided the surfaces to be painted are dry and the temperature can be kept above 45 degrees Fahrenheit during the application or ordinary paints, and between 65 degrees Fahrenheit and 95 degrees Fahrenheit during the application of enamels and varnishes. Paint shall not be applied during foggy or rainy weather or when, in the opinion of the Officer in Charge, the surfaces are not in proper condition for painting.

9A.5.2 Special requirements for painting with acrylic emulsion paint.

(a) Mixing of fill coat. The formula given in specification TT-P-19 for the content of the fill coat required a definite amount of water to be added in preparation of the mixture. This requirement shall not apply. The sand, cement, and acrylic liquids shall each be delivered preproportioned and packaged so that field proportioning will not be required. The acrylic liquid shall be field mixed with the sand and cement, and after this mixture is thoroughly blended, water shall be added as necessary to produce a rich, creamy mixture of proper brushing consistency. The fill coat materials shall be mixed by hand but not vigorously agitated. After mixing, it shall be allowed to set for ten minutes to permit air to escape before applying. The fill coat mixture will gradually thicken with time and addition of small amounts of water, and additional stirring shall be accomplished when necessary to keep the mixture a rich brushing consistency. Mixing shall be not longer than one hour before application.

(b) Wetting of surfaces. Before applying filler coat, the masonry and concrete shall be thoroughly wetted to control surface suction and provide a reserve of moisture to aid in curing the paint. A garden hose nozzle adjusted to a fine spray is adequate for the purpose. Dampening with a brush dipped in water is not acceptable. The masonry and concrete shall be dampened in one operation not more than one hour and not less than 30 minutes before painting. The spray shall be applied in such manner that each part is sprayed 3 or 4 times for about 10 seconds, time being allowed between applications for the water to soak into the surface. If the surface tends to dry rapidly, as in hot weather, it shall be redampened slightly just in advance of painting. The surface shall be moist but without free water when paint is applied.

(c) Application. No painting shall be done when the paint may be exposed to temperatures below 40 degrees Fahrenheit within 48 hours after application or when the temperature is over 95 degrees Fahrenheit. Paint shall not be applied during foggy or rainy weather or when, in the opinion of the Officer in Charge, the surfaces are not in proper condition for painting. Time for completion will be extended to compensate for time lost due to unfavorable weather conditions. The filler coat shall be rubbed

into the surface in such a manner as to fill all depressions, holes, voids, joints, and hollows. The filler coat shall be scrubbed into the surface with short, stiff fiber bristle brushes with bristles not longer than 2-1/2 inches, using a circular motion. After scrubbing in the filler coat so that all voids are filled the surface shall be given a final stroke parallel to the course of block. Coverage shall be uniform and laps well brushed out. The first finish coat shall be applied at a rate of not less than one gallon per 175 square feet, and the second finish coat shall be applied at the rate of not less than one gallon per 225 square feet. Finish coats shall be brush applied, except that behind large ducts and similar locations inaccessible to a brush they may be applied by rollers. Spray application will not be permitted. All paint shall be delivered to the job site prior to application. The Officer in Charge will compute the amount of finish coat paint required by the specifications, and no painting shall be commenced until this amount has been delivered to the job site. All delivered paint shall be applied. Paint shall be kept in tightly covered containers when not in use and shall be kept stireed to maintain uniform color and consistency during application. At least 24 hours shall lapse between coats and in no case shall another coat be started until the preceding coat has become so hard that it cannot be marked with the brushes used. In hot weather, the prior coat shall be slightly moistened before applying the succeeding coat. Covering is not necessary.

9A.6 Scope. The paint coats specified herein are in addition to the coating specified hereinbefore. The surfaces to be painted hereunder include all surfaces of the types listed exposed in the interior and exterior of the treatment plant and pumping station. Exterior painting specifically includes all surfaces of the types listed mounted on or a part of the roofs. Surfaces concealed by portable objects and by articles mounted on the surfaces and readily detachable by removal of fasteners such as screws and bolts are included in the work but surfaces concealed and made inaccessible by panelboards, fixed ductwork, machinery, equipment fixed in place, etc., are not included. Articles obstructing access to those surfaces specified to be included in the work shall be removed for access and restored to their original position on completion. Copper, stainless steel and aluminum will not require painting except where specifically so stated. Work in concealed spaces is not required to be painted unless specifically so stated herein. Concealed spaces are defined as spaces above suspended ceilings, attic spaces, crawl spaces, furred spaces and chases. Painting of ceiling and wall surfaces in elevator shaft will not require painting.

9A.6.1 Exterior surfaces shall receive the following unless specified otherwise herein:

(a) Exterior metal. Shop primed metal surfaces shall receive on coat of red lead paint conforming to specification TT-P-86, Type I or III or zinc chromate primer conforming to specification TT-P-645, applied to a minimum dry film thickness of 1.0 mil. Shop primer coat shall be touched

up prior to applying primer specified. Metal surfaces, not shop primed, shall be primed with two coats of red lead paint conforming to specification TT-P-86, Type I or III, or zinc chromate primer conforming to specification TT-P-645. Each coat shall be applied to a minimum dry film thickness of 1.0 mil. All primed metal surfaces shall receive two coats of exterior enamel conforming to specification TT-E-489.

9A.6.2 Interior surfaces shall receive the following unless specified otherwise herein:

(a) Wood surfaces of hatches at roof of reservoir pumping station shall receive two coats of paint to match adjacent surfaces.

(b) Metal surfaces. Shop primed metal surfaces shall be touched up prior to applying finish coats. Metal surfaces, not shop primed, shall receive one coat of zinc chromate primer conforming to specification TT-P-645 applied to a minimum dry film thickness of 1.0 mil. All primed metal surfaces, except as specified otherwise, shall receive undercoat and finish coat of the same paint as, and to match the surfaces at which the metal surfaces occur.

(1) Primed metal surfaces of doors and frames shall receive one coat of enamel undercoat conforming to specification TT-E-543 and one coat of interior semigloss enamel conforming to specification TT-E-508.

(2) Primed metal surfaces in unpainted areas or not adjacent to painted surfaces, except in attic spaces, above suspended ceilings and in crawl spaces shall receive one coat of enamel undercoat conforming to Specification TT-E-543 and one coat of interior semigloss enamel conforming to specification TT-E-508.

(c) Wall and ceiling surfaces of concrete and masonry. Masonry and concrete surfaces shall be primed with one coat, except for the inside face of exterior masonry walls which shall be primed with two coats of chlorinated rubber base paint conforming to specification TT-P-95. Primed surfaces shall receive two coats of flat interior alkyd paint conforming to specification TT-P-30, except as specified otherwise.

(1) Concrete ceiling surfaces in all areas where exposed shall receive one coat of textured coating conforming to specification TT-C-555, Type I.

(d) Filter walls and floors. Concrete surfaces shall receive two coats of an asphalt paint suitable for surface in contact with drinking water. The paint shall be highly refined, tasteless bituminous coating consisting of a blend of Gilsonette select, blown asphalt and steam distilled asphalt. The minimum dry mil thickness shall not be less than 1.2 percoat. Application shall be by brush, roller, or spray with an approved thinner as recommended by the manufacturer.

9A.6.3 Surfaces in toilets, showers, corridor #4 and lockers shall receive the following:

(a) Wood surfaces shall receive one coat of enamel undercoat conforming to specification TT-E-543 and one coat of interior gloss enamel conforming to specification TT-E-506. Plywood shall receive one coat of varnish type sealer conforming to specification TT-S-176 before undercoat and finish coat are applied.

(b) Metal surfaces. Shop primed surfaces shall be touched up prior to applying finish coats. Metal surfaces not shop primed shall receive one coat of zinc chromate primer conforming to specification TT-P-646 applied to a minimum dry film thickness of 1.0 mil. All primed metal surfaces shall receive one coat of enamel undercoat conforming to specification TT-E-543 and one coat of interior gloss enamel conforming to specification TT-E-506.

(c) Concrete, masonry and wall surfaces shall receive two coats of chlorinated rubber base paint conforming to specification TT-P-95, one coat of enamel undercoat conforming to specification TT-E-543 and one coat of interior gloss enamel conforming to specification TT-E-506.

9A.6.4 Cloth covering on insulation shall receive undercoat and finish coats to match adjacent surfaces.

9A.6.5 Plastic foam pipe insulation. Surfaces not exposed to the weather shall receive two coats of latex paint conforming to specification TT-P-29. Surfaces exposed to the weather shall receive two coats of a weatherproof vinyl lacquer coating as recommended by the insulation manufacturer.

9A.6.6 Piping, fittings, and mechanical and electrical equipment, except smokestacks and hot metal surfaces. Copper pipe exposed in interior spaces shall be painted. Pipe hangers, structural supports, pipe and pipe fittings,conduits and conduit fittings, ducts, air grilles, pipe coverings, insulations, and miscellaneous steel and iron work shall be painted to match the adjacent surfaces, utilizing the painting systems as specified hereinbefore. Ferrous piping in concealed spaces or under insulation shall be coated with one coat of pretreatment coating conforming to specification MIL-P-15328, applied to a dry film thickness of 0.3 to 0.5 mil, and then be given two coats of zinc chromate primer conforming to specification TT-P-645, each coat applied to a dry film thickness of 1.0 mil. Equipment shall be factory finished in accordance with the specification for the particular end item.

(a) Piping and conduit identification shall be provided, including surfaces in concealed spaces, and shall conform to the requirements of a standard MIL-STD-101, using black stencil paint conforming to specification MIL-P-15149 for identification. Stenciling shall be placed in clearly visible locations. All piping and conduits not covered by the

aforementioned standard shall be stenciled with approved names or code letters, not less than 1/2 inch high for piping and not less than 2 inches high elsewhere. Arrow shaped markings shall be painted on the lines to indicate the direction of flow. Two copies of the complete color and stencil codes used shall be provided; they shall be framed under glass and shall be installed where directed.

(b) Surfaces not requiring paint. The following surfaces will not require field painting:

(1) Zinc coated and copper pipe under insulation.

(2) Zinc coated ducts under insulation.

(3) Zinc coated and copper pipe in concealed spaces.

(4) Insulation in Concealed Spaces

(c) Surfaces of ferrous metal in unpainted areas or not adjacent to painted surfaces, except in concealed spaces, shall receive one coat of zinc chromate primer conforming to specification TT-P-645 and two coats of exterior enamel conforming to specification TT-E-489.

9A.6.7 Smokestacks and hot metal surfaces, including piping under insulation and in concealed spaces. Hot metal surfaces are defined as surfaces that are subject to temperatures in excess of 120 degrees Fahrenheit. Metal surfaces subject to temperatures in excess of 400 degrees Fahrenheit and smokestacks shall receive two coats of heat resisting aluminum paint conforming to specification MIL-P-14276, applied to a total minimum dry film thickness of 2mils. Metal surfaces subject to temperatures in excess to 120 degrees Fahrenheit but no in excess of 400 degrees Fahrenheit shall receive two coats of heat resisting enamel conform to specification TT-E-496, Type II, applied to a total minimum dry film thickness of 2 mils. The paints shall be applied directly on bare, clean metal only.

9A.6.8 Air conditioning units. Painting specified hereunder is in addition to the manufacturer's standard shop applied painting and shall be field applied. Interior surfaces, except heat transfer surfaces, shall receive two coats of coal tar base coating conforming to specification MIL-C-18480 applied to a total minimum dry film thickness of 40 mils. Exterior surfaces shall receive two coats of exterior enamel conforming to specification TT-E-489 applied to a total minimum dry film thickness of 2.0 mils.

9A.6.9 Other surfaces for which the type of paint has not been specified hereinbefore shall be painted as specified for surfaces having similar conditions of exposure.

---oOo---

SECTION 9B TILE WORK

9B.1 Applicable publications. The following publications of the issues listed below, but referred to elsewhere by basic designation only, form a part of this specification to the extent indicated by the references thereto (where a number is suffixed to the specification number, it denotes the effective amendment to the specification):

(a) Federal Specifications.

SS-C-192g(1) Cement, Portland
SS-T-308b Tile, floor, wall, and trim units, ceramic

(b) Department of Commerce Simplified Practice Recommendations

SPR 61-61 Ceramic tile for floors and walls

(c) Non Government Specifications.

American Society for Testing and Materials (ASTM)

C-35-67 Specification for inorganic aggregates for use in gypsum plaster.
C-144-66T Specification for aggregates for masonry mortar.
C-206-49 Specificaton for special finishing hydrated lime.
C-207-49 Specification for hydrated lime for masonry purposes.

9B.2 General requirements. Tile work shall not be started until the roughing in for plumbing, heating, ventilating, air conditioning, and electrical work has been completed and tested; built in bath tubs, shower stalls, and all membrane waterproofing have been installed and tested; and unless the ambient temperature of the are in which the work occurs is at least 50 degrees F. and rising, and is maintained without interruption while the work is being done and for at least three days after the completion of the work. The work of all other trades in the area where tile work is to be done shall be protected from damage in a workmanlike manner and as directed.

9B.3 Materials. Manufactured materials shall be delivered in the manufacturer's original unbroken packages or containers that are labeled plainly with the manufacturer's names and brands. Containers for tile shall be grade sealed. Materials shall be stored in dry weathertight enclosures, and shall be handled in a manner that will prevent the inclusion of foreign materials and damage by water or dampness.

9B.3.1 Tile shall be ceramic, standard grade, conforming to specification SS-T-308 and to Simplified Practice Recommendation R61. Colors specified shall be of approved shades; colors not specified shall be as selected. Tile work shall include matching trim units and accessories. Tile

accessories included in this specification shall be the built in type, of materials identical with those of glazed trim units.

(a) Type I, unglazed floor tile.

(1) Unglazed ceramic mosaic tile shall be Class A, form I, porcelain tile and shall be provided for all floors except as indicated or specified otherwise herein.

(2) Quarry tile is specified in section entitled "Acid Resisting Quarry Tile Floors".

(3) Non slip tile. Ceramic mosaic tile for floors of shower rooms or stalls and toilet, lockers and corridor #4 shall be the non slip type, and shall contain not less than 7.5 percent of abrasive by weight for porcelain tile and natural clay tile. The abrasive shall be rustproof and shall be uniformly impregnated in the surface of the tile. Abrasive aggregate shall be aluminum oxide (Al_2O_3) or other rustproof abrasive of comparable hardness.

(b) Glazed wall tile shall be type II, Class G, in matte glaze.

(c) Tile schedule.

Room No. or Location	Floor tile size	Wall tile size
Toilet, lockers Shower room Corridor #4	Random	
Shower stalls	Random	4-1/4 inch x 4-1/4 inch x 1/4 inch

(d) Type III trim units shall be provided where necessary for a complete and neatly finished installation. Base units shall be provided for tile floors. Internal corners shall be squared and external corners rounded, using appropriate matching trim units. Trim units shall be of material and finish identical to wall tile.

(e) Accessories shall conform to the applicable requirements of the specification for type III, class M, glazed trim units. The accessories listed shall be provided where indicated, except that where they are listed and not indicated, they shall be located where directed.

Accessories to be provided.

Two recessed soap holders and grab bars
Two towel bars, thirty inches long.
Eight robe hooks.

9B.3.2 Portland Cement including white portland cement, shall conform to the requirements of specification SS-C-192, type I.

9B.3.3 Hydrated lime shall conform to the requirements of ASTM specification C-206 or ASTM Specification C-207, type S.

9B.3.4 Sand and coarse aggregate.

(a) Sand for mortar setting beds shall conform to the requirements of ASTM Specification C-144, except that all sand for dry set mortar beds shall pass a no. 30 mesh sieve.

(b) Sand for pointing mortar shall conform to the requirements of ASTM Specification C-35.

9B.3.5 Water shall be potable.

9B.3.6 Metal dividing strips shall be provided at joints where floor tile abuts and is flush with other types of floor finishes, except at doors where thresholds are provided. Dividing strips shall be the heavy top terazzo type, fabricated from zinc alloy, approximately 1/16 inch thick with a 1/4 inch thick top, and a depth equal to the thickness of the tile plus the setting bed.

9B.4 Installation.

9B.4.1 Mortar materials shall be measured in approved containers, which will insure that the specified proportions of materials will be controlled and accurately maintained during the progress of the work. Measuring materials with shovels, "shovel count", will not be permitted. Unless specified otherwise, mortar shall be mixed in proportions by volume, in approved mixing machines or mortar boxes. The quantity of water shall be controlled accurately and uniformly. The aggregates shall be introduced and mixed in such manner that the materials will be distributed uniformly throughout the mass. A sufficient amount of water shall be added gradually, and the mass further mixed until a mortar of the plasticity necessary for purposes intended is obtained. Mortar boxes, pans, floor slabs, and mixer drums shall be kept clean and free from debris or dried mortar. Mortar shall be used before the initial setting of the cement has occurred; retempering of mortar in which cement has started to set will not be permitted, Setting beds for showers shall be waterproofed, using an approved waterproofing admixture, mixed in accordance with the manufacturer's printed directions.

		Mortar Setting Bed Mixes (parts by volume)			
Tile type	Location	Portland Cement	Dry Sand	Damp Sand	Lime
Class A	Floors	1	5	or 6	1/10
	Shower receptors	1	3-1/2	or 4	-
Type II, Classes G	Walls	1	4	or 5	1/2

9B.4.2 Application of tile flooring.

(a) Preparation of structural floor surfaces. Surfaces to receive the tile shall be clean, free of dust, dirt, oil, grease, and other deleterious substances. Floor tile operation in spaces receiving wall tile shall not be started until after wall tile installation has been completed.

(b) Membrane waterproofing is specified in section entitled "Membrane Waterproofing and dampproofing", and shall be tested for water-tightness before tile work is started.

(c) Mortar setting beds shall be a minimum thickness of 3/4 inch for floors, and 1-3/4 inches for shower receptors. Except for shower receptors and other sloped floors, mortar setting beds shall be not more than 1-1/4 inches thick. The structural concrete slab shall be soaked thoroughly with clean fresh water on the day before the setting bed is to be applied. Immediately preceding the application of the setting bed, the structural slab shall again be wetted thoroughly but no free water shall be permitted to remain on the surface. A skim coat of neat portland cement mortar shall then be applied not more than 1/16 inch thick. The mortar shall be spread until its surface is true and even, and thoroughly compacted, either level or sloped uniformly for drainage, as the case requires. A setting bed, as large as can be covered with tile before the mortar has reached its initial set, shall be placed in one operation; but in the event that more setting mortar has been placed than can be covered, the unfinished portion shall be removed and cut back to a clean bevelled edge.

(d) Metal dividing strips shall be installed in the mortar setting bed while it is still in a plastic state. The dividing strips shall be set accurately in straight, unbroken lines, flush with the finished floor surface.

(e) Application of tile flooring in portland cement mortar. All unmounted tiles, except impervious and vitreous, shall be soaked in clean water a minimum of one hour before they are set. Absorptive mounted tile shall be dampened by placing sheets on a wetted cloth in a shallow pan before setting. No free water shall remain on the tiles at the time of setting. Before the initial set has taken place in the setting bed, a skim coat of neat portland cement mortar, 1/32 to 1/16 inch thick, shall be troweled or brushed over the setting bed and/or the back of the tile, or a thin layer of portland cement, 1/32 to 1/16 inch thick, may be hand dusted uniformly over the setting bed and worked lightly with a trowel or brush until thoroughly damp. The tiles or sheets shall then be pressed firmly upon the setting bed, and beaten into the mortar until true and even with the plane of the finished floor line. Beating and levelling shall be completed within one hour after placing tiles or sheets. Borders and defined lines shall be laid before the field or body of the floor. Where floor drains are provided, the floors shall be sloped to drain properly to the drains. Intersections and returns shall be formed accurately, cutting of tile, where necessary, shall be done along the outer edges of the floor. As far as

practicable, no tiles of less than half size shall be used. Cutting and drilling of tiles shall be done neatly without marring the tile surfaces. The cut edges of tile against trim, bases, thresholds, pipes, built in fixtures, and similar surfaces shall be ground and jointed carefully. Tile shall fit closely and neatly at all plumbing fixtures and around electrical outlets, pipes, and fittings so that cover plates or escutcheons will overlap the tiles properly. Tiles shall be secured firmly in place, and loose tiles or tiles sounding hollow shall be removed and replaced. All lines shall be kept straight, parallel, and true and all finished surfaces brought to true and even planes. The inner edges of borders shall be kept straight, and where practicable, shall form right angles at all returns. The paper and glue shall be removed from mounted tile, without using excess water, within one hour after installing tile.

9B.4.3 Appplication of wall tile.

(a) Preparation of walls, wainscots, and other surfaces.

(1) Metal lath is specified in section entitled "Metal Lathing".

(2) Scratch coat is specified in section entitled "Plastering and Stuccoing". Scratch coats shall be applied not less than 24 hours or more than 48 hours before starting the tile setting.

(3) Mortar setting bed. Immediately preceding the application of the mortar setting bed, the setting bed, the scratch coat shall be moistened throughly but not saturated. Temporary screeds shall be applied to the scratch coat with mortar to provide a true and plumb surface the proper distance back from the finished wall line. The setting bed shall be applied, rodded, and floated flush with the screeds over an area no greater than will be covered with tile while the bed remains plastic. The thickness of the setting bed shall not exceed 3/4 inch and the mortar shall not be retempered. The setting bed shall be cut with a trowel at all internal corners, as specified for the scratch coat.

(b) Application of tile to walls, wainscots, and other surfaces. Unmounted tiles, except impervious and vitreous, shall be soaked in clean water a minimum of one hour before they are set. Absorptive mounted tile shall be dampened by placing sheets on a wetted cloth in a shallow pan before setting. A skim coat of neat portland cement mortar, mixed with water to the consistency of a pasty, thick cream, shall be applied 1/32 to 1/16 inch thick to the mortar setting bed, or to the back of each tile as laid. The tiles shall then be pressed firmly upon the setting bed and tamped until flush and in the plane of the other tiles. The tiles shall be applied before the mortar bed has taken its initial set. Intersections and returns shall be formed accurately. Where cutting of tiles is necessary it shall be done at the internal angles of walls or wainscots. As far as possible, tiles of less than half size shall not be used. Cutting and drilling of tiles shall be done neatly without marring the surfaces. The cut edges of tiles against trim, built in fixtures, and similar surfaces shall be ground

and jointed carefully. Tiles shall fit closely at plumbing fixtures and around electric outlets, pipes, and fittings, so that the plates or escutcheons will properly overlap the tiles. Tiles shall be secured firmly in place, and loose tiles, or tiles sounding hollow, shall be removed and replaced. Bases, caps, bull nose corners and all other trimmers, moulded or shaped features and accessories shall be backed throughly with mortar and set firmly in place. All lines shall be kept straight and true, and all finished surfaces brought to true and even planes, straight and plumb, and internal corners squared and external corners rounded. Horizontal joints shall be maintained level and vertical joints plumb and in alignment. The completed work shall be free of broekn, cracked, damaged, or otherwise faulty tiles.

9B.4.4 Joints shall be parallel and uniform in width, plumb, level, and in alignment. End joints in broken joint work shall be made as far as practicable, on the center lines of adjoining tiles. Except in special arrangements and design, as indicated or specified, square tiles shall be set with straight joints, and oblong tiles shall be set with broken joints.

(a) Joints widths shall be uniform and spaced to accommodate the tile in the given spaces with a minimum of cutting, except that the standard mounting widths between units and abutting sheets of paper mounted ceramic mosaic tile shall be maintained.

(1) Joint width for mounted tile shall be as determined by the mounted tile spacing.

(2) Joint width for unmounted tile shall be 1/16 inch average, with a maximum of 3/32 inch.

(3) Joint width for trim units and accessories shall conform to that of adjoining tile units.

(b) Grouting and pointing. Tile shall be wetted, if they have become dry, before applying grout. Joints 1/8 inch or less in width shall be grouted with a neat portland cement grout of the consistency of thick cream. Other joints shall be pointed with mortar consisting of one part portland cement and two parts pointing sand. The grout or mortar for joints in floors shall contain light gray portland cement. The grout for walls and other vertical surfaces shall contain non staining white portland cement. Grout and pointing mortar shall be forced into joints by using trowel, squeege, brush, or finger application. Before the grout or mortar sets, the joints of cushion edge tile shall be struck or tooled to the depth of the cushion, filling all skips or gaps, and the joints of square edge tile shall be filled completely flush with their surface. Dark cement shall not show through grouted white joints. Care shall be taken to avoid scratching glazed finishes. All surplus mortar or grout shall be removed before it has set or hardened.

9B.5 Cleaning and curing. Floors shall be covered with waterproofed paper with all joints lapped at least 4 inches and the laps tape sealed or held down with planks or other weights, and allowed to damp cure for at le-st 72 hours before foot traffic is permitted thereon. All completed tile work shall be thoroughly sponged and washed diagonally across joints, and finally polished with clean, dry cloths. Acid cleaning of unglazed tile, when necessary, shall not be done within ten days after setting tile. All metal shall be covered with an approved grease and the tile wet with clean water, before tile is cleaned with a 10 percent muriatic acid solution. After acid cleaning, the tile shall be flushed with clean water, and the grease coating on metal removed. Acid cleaners shall not be used on glazed tile.

9B.6 Protection. Finished tile floors shall be covered with clean building paper before foot traffic is permitted on them. Board walkways shall be placed on floors that are to be continuously used as passageways by workmen. Marbel sills and thresholds shall be covered with boards. Tiled vertical outside corners (external angles) shall be protected with board corner strips in areas used as passageways by workmen.

9B.7 Quality Control. Provisions of Section entitled "Contractor Quality Control" shall apply.

9B.7.1 Samples. The following tile samples of the actual tile to be provided shall be submitted for approval before tile work is started:

(a) Floor tile - duplicate sheets of tile, each about 12 inches square, showing colors and patterns of each type, class and form;

(b) Wall tile - duplicate of four tiles each showing range and shades of each color;

(c) Trim units - duplicate pieces of each color and shape;

(d) Accessories - one ofeach color, type and style.

The finished work shall match the approved samples in size, color, pattern, finish, and texture.

---o0o---

SECTION 9C ACID RESISTING QUARRY TILE FLOORS

9C.1 Applicable publications. The following publications of the issues listed below, but referred to elsewhere by basic designation only, form a part of this specification to the extent indicated by the references thereto (where a number is suffixed to the specification number, it denotes the effective amendment to the specification):

(a) Federal and Military Specifications.

SS-T-308b Tile, floor, wall, and trim units, ceramic

(b) Non Government Specifications and Standards.

American Society for Testing and Materials (ASTM)

C267-65 Method of test for chemical resistance of mortars
C395-64 Specification for resin type chemical resistant mortars
C413-63T Method of test for absorption and apparent porosity of chemical resistant mortars.
D95-62 Test for water in petroleum products and other bituminous materials.

9C.2 General requirements. Quarry tile shall be applied in acid-resisting resin mortar only by appliers who are specifically authorized or licensed by the rsin manufacturer. Except where specified otherwise herein, mortar shall be handled, stored, mixed, and applied in accordance with the manufacturer's printed instructions, including all recommended safety requirements. The manufacturer's written authorization of the applier, two copies of printed instructions and safety requirements, and an estimated quantity of materials per 100 square feet of floor, shall be submitted for approval before work is started. Tile work shall not be started until the roughing in for plumbing, heating, ventilating, air conditioning, and electrical work has been completed and tested; all membrane waterproofing has been installed and tested; and unless the ambient temperature of the area in which the work occurs is at least 60 degrees Fahrenheit and rising, and is maintained without interruption while the work is being done and for at least three days after the completion of the work. The work of all other trades in the area where tile work is to be done shall be protected from damage in a workmanlike manner and as directed.

9C.3 Materials shall be delivered in the manufacturers' original unbroken packages or containers, which are labeled plainly with the manufacturer's names and brands. Containers for tile shall be grade sealed. Materials shall be stored in dry, weathertight enclosures, and shall be handled in a manner that will prevent the inclusion of foreign materials and damage by water, dampness, or temperature extremes. Materials shall be stored for not less than 24 hours in the area in which they will be used, immediately before they are used.

9C.3.1 Quarry tile shall be standard grade, type I, class C, 6 inches by 6 inches by 3/4 inch, conforming to specification SS-T-308. The backs and edges of tile shall be scored or grooved not deeper than 3/32 inches. Tile shall be a color selected from the manufacturer's standard color samples.

(a) Non slip quarry tile. Quarry tile for floors of filter gallery shall be of the non slip type. Non slip quarry tile shall conform to the requirements for quarry tile specified hereinbefore and shall contain not less than 7.5 percent abrasive aggregate by weight. The abrasive aggregate shall be aluminum oxide (Al_2O_3) or other rustproof aggregate of comparable hardness, and shall be uniformly impregnated in the face surface of the tile.

(b) Quarry tile trim units shall be standard grade, type III. Class L, conforming to specification SS-T-308. Cove base shall be provided around the perimeter of floors and around all vertical projections through floors. Bullnose trim shall be provided around all depresssions in floors. Trim units shall match floor units in appearance and composition. Rounded internal and external corners with 3/4 inch minimum radius shall be provided by using appropriate matching corner units.

9C.3.2 Acid resisting mortar (chemical) conforming to ASTM specification C395, shall be provided for setting beds and joints of quarry tile floors. Acid resisting mortar shall be furan resin mortar or epoxy resin mortar. When completely set and hard, the mortar shall be free from offensive odors.

(a) Chemcial resistance. Mortar shall be tested for chemical resistance to:

(1) Acetic acid, 10 percent.
(2) Citric acid, 40 percent.
(3) Lactic acid, 10 percent.
(4) Sodium hypochlorite, 2 percent.
(5) Trisodium phosphate.
(6) Household ammonia
(7) Sugar, saturated solution.
(8) Vegetable oil.

Testing of mortar shall be in accordance with ASTM Method C267, except as modified herein. Test specimens shall be immersed in the test solutions for 28 days, and the solutions. except ammonia, shall be maintained continuously at a temperature of 140 degrees Fahrenheit. Ammonia shall be maintained at room temperature instead of 140 degrees Fahrenheit. The test specimens shall not have a change in weight or more than 5 percent of their weight before immersion, or a compressive strength of less than 90 percent of the compressive strength of specimens that have aged in air at 70 to 80 degrees Fahrenheit during the total test period.

(b) Physical properties. After curing for seven days at 70 to 80 degrees Fahrenheit, the mortar shall: (1) have a water absorption of not more than 0.5 percent when tested in accordance with ASTM Method C413; (2) have a hardness of not less than 90 percent of its initial hardness immediately before exposure, when tested after being exposed for 6 hours at 130 degrees Fahrenheit for epoxy resin mortar and 200 degrees Fahrenheit for furan resin mortar. Hardness tests shall be made on 3/8 inch by 3/4 inch by 4 inch samples with a Barcol Hardness Tester, within 30 seconds after the samples are removed from the oven.

(c) Furan resin type mortar shall be a two component mix consisting of a liquid furan resin and a powder. The liquid shall not contain any non polymerizable solvent or more than 3 percent water, by weight. The powder shall consist of a hardnener and an insert filler.

(d) Epoxy resin type mortar shall be a two or three component mix consisting of a liquid epoxy resin, hardener, and an insert powder filler. The filler may be pre mixed with the resin, the hardener, or both in the two component mix. No component shall contain more than 0.5 percent water, by weight, or any non polymerizable solvents.

(e) Determination of moisture content of resins shall be made in accordance with ASTM method D95.

9C.4 Application of quarry tile flooring in acid resisting mortar. Before tile is applied, the structural floor shall be tested for levelness or uniformity of slope by flooding it with water. Areas where water stands deeper than 1/8 inch shall be filled, leveled, and retested as directed, before the setting bed is applied. Floor tile and trim units shall be applied in acid resisting mortar in accordance with the manufacturer's directions, except as specified otherwise herein.

9C.4.1 Preparation of tile. Prior to application, the face surfaces of quarry tile floor and trim units shall be factory coated or field coated with hot paraffin wax to produce a thin continuous film. Wax shall be applied in such manner that it will not get on edges or backs of tile. Tile shall be handled in a manner that will prevent the waxed surfaces of units from touching the backs or edges of other units. Tile with wax on edges or backs shall be rejected and removed from the job.

9C.4.2 Preparation of concrete decks for furan setting beds. Decks shall be (1) etched with a solution of one part muriatic acid (31.5 percent, technical grade) and two parts clean water, by volume, applied to deck by brush or garden spray until the solution runs; (2) rinsed thoroughly with water; and (3) allowed to dry. Decks and other surfaces which will be in contact with the setting bed shall be coated with a liberal application of cutback asphalt primer. In lieu of the surface preparation specified, other methods of surface preparation recommended by the manufacturer may be provided, as approved. Proof of satisfactory experience with the recommended method of surface preparation for a period of not less than 5 years shall be submitted with the manufacturer's instructions.

9C.4.3 Preparation of concrete decks for epoxy setting beds. Decks shall be (1) etched with a solution of one part muriatic acid (31.5 percent, technical grade) and two parts water, by volume, applied to deck by brush or garden spray until the solution runs; (2) rinsed thoroughly with water; (3) neutralized with a solution of one cup of household ammonia to each gallon of water, applied to deck by brush or garden spray until the solution runs, and allowed to remain on the deck for a minimum of 30 minutes; (4) rinsed thoroughly with water; and (5) allowed to dry.

9C.4.4 Setting bed. A continuous setting bed of acid resisting mortar, not less than 1/8 inch thick shall be applied with straight edge trowels to an area that can be tiled during the "open time" of the mortar. Notched trowels may be used, provided that the notches are not less than 3/8 inches deep and the space between notches is not more than twice the width of the notches. Mortar shall be applied to the backs of the tiles to completely filled all grooves. Tile shall be placed into the setting bed and beaten lightly to a true plane. Tile shall be levelled as it is placed, and suitable gauging strips shall be used to insure uniform joints, 1/4 inch minimum and 3/8 inch maximum width. The setting bed shall be allowed to cure sufficiently to anchor the tile in place, not less than 24 hours, at a floor temperature of not less than 60 degrees Fahrenheit.

9C.4.5 Mortar joints. After the setting bed has cured, joints shall be filled with resin mortar. The mortar shall be spread on the surface of the tile and worked into the open joints with a trowel or rubber squeegee, pushed diagonally across the joints. Joints shall be filled completely flush with the top surfaces of the tile. Excess mortar shall be removed with one pass of the trowel or squeege in order to prevent imperfect filling and low joints. Vodis, pinholes, and depressions shall be filled immediately with additional mortar. The completed joints shall be protected from traffic and permitted to harden for not less than 72 hours.

9C.4.6 Cleaning. After the joints have hardened, tile surfaces shall be scrubbed and washed with steam or hot water to melt the wax coating and remove excess mortar. Remnants of resin mortar shall be removed with wide blade paint scrapers or other tools that will damage tile. Tile shall be rinsed with clean warm water applied with a flat sponge. Excess water shall be removed from the floor, and the follor shall be left reasonably dry when work is completed. Tile from which mortar cannot be removed from the surfaces without damage to the tile shall be removed and replaced.

9C.5 Quality Control. Provisions of Section entitled "Contractor Quality Control" shall apply.

9C.5.1 Test reports. A notarized affidavit shall be submitted by an approved nationally recognized testing agency, certifying that the resin-type mortar to be provided has been tested as specified and conform to the requirements specified hereinbefore.

9C.5.2 Sample panel. A sample panel of quarry tile on plywood approximately 2 feet by 2 feet, shall be submitted for approval before work is started. The panel shall show the workmanship, jointing, color range of tile units, and color of mortar. The work throughout the project shall match the approved sample.

---oOo---

SECTION 9D VINYL ASTBESTOS TILE

9D.1 Applicable publications. The following publications of the issues listed below, but referred to elsewhere by basic designation only, form a part of this specification to the extent indicated by the references thereto (where a number is suffixed to the specification number, it denotes the effective amendment to the specification):

(a) Federal Specifications.

MMM-A-110a	Adhesive, asphalt, cut back type (for asphalt and vinyl asbestos tiles).
P-W-155a(3)	Wax, floor, water emulsion, slip resistant.
SS-A-00701a	Asphalt, petroleum (primer, roofing, and waterproofing).
SS-T-312	Tile, floor; asphalt, rubber, vinyl, vinyl asbestos.
SS-W-40a	Wall base: rubber and vinyl plastic.

9D.2 General. The provision of all vinyl asbe-tos tile, cove base, and all materials indicated, specified or necessary for a complete and finished installation is included. Floor covering work shall not be started until the work of other trades, including painting, is substantially completed. Spaces in which floor covering work is to be performed shall be maintained at not less than 70 degrees Fahrenheit at the floor level for at least 48 hours prior to starting the work, during the time work is performed, and for at least 48 hours after the work is completed. Adequate ventilation shall be provided to remove moisture and fumes from the area. Two current copies of the floor covering manufacturer's recommended standard installation procedure for each type of floor covering material shall be submitted for approval before the work is started.

9D.3 Materials shall be delivered to the job in the manufacturer's original unopened containers, with the brands and names clearly marked thereon. All materials shall be carefully handled and shall be stored in their original containers at not less than 70 degrees Fahrenheit for at least 24 hours before work is started. Containers shall not be opened until approved. Floor coverings shall be provided in colors as selected from manufacturer's standard colors. The color and pattern of tile shall be uniformly distributed throughout the thickness of the tile.

9D.3.1 Vinyl asbestos tile, 1/8 inch thick, 9 by 9 inches, conforming to specification SS-T-312, type IV, shall be provided where indicated.

9D.3.2 Rubber cover base, top set type 4 inches high, 1/8 inch thick, plain colors conforming to specification SS-W-40a, type I, style B, shall be provided at all locations indicated and at all intersections of floor tile with wall surfaces except as indicated otherwise. Base shall be the

standard product of the manufacturers of the floor covering, and shall be sufficiently flexible to conform to irregularities in walls, partitions, and floors. Molded corners shall be provided for all right angle external and internal corners.

9D.3.3 Vinyl cove base, top set type, 4 inches high, 1/8 inch thick, plain colors conforming to specification SS-W-40, type II, style B, may be provided at the Contractor's option in lieu of rubber cove base. Base shall be the standard product of the manufacturer of the floor covering, and shall be sufficiently flexible to conform to irregularities in walls, partitions and floors. Molded corners shall be provided for all right angle external and internal corners.

9D.3.4 Primer, cut back type, shall conform to specification SS-A-00701.

9D.3.5 Asphalt adhesive, cut back type, shall conform to specification MMM-A-110.

9D.3.6 Water emulsion wax shall conform to specification P-W-155.

9D.3.7 Metal edging strips shall be of extruded aluminum or other light colored non ferrous metal, as approved.

9D.4 Preparation of subfloors.

9D.4.1 Subfloors that are to receive floor covering shall be clean, thoroughly dry, smooth, firm and sound; and they shall be free from oil, dirt, curing compounds or other deleterious material. Subfloors shall be swept, vacuumed, and damp mopped when necessary to remove dust and soil; and shall be scrubbed with a strong detergent solution, thoroughly rinsed, and spot primed, when necessary to remove oil or grease stains.

9D.4.2 Concrete subfloors. All ridges shall be ground smooth, and all small holes and all cracks less than 1/16 inch shall be filled with an approved plastic material. Large holes or depressions shall be filled with a mastic type underlayment, troweled on to a smooth surface. All cracks 1/16 inch or wider shall be cut out and filled with a nonshrinking cement mortar. Chalky or dusty surfaces shall be primed with an approved primer, recommended by the floor covering manufacturer.

9D.4.3 Moisture test for subfloors to which vinyl asbestos tile is to be applied. After subfloors have been properly cleaned, small patches of primer shall be spread in several locations in each room and allowed to dry or "set" overnight. If the "set" primer can be peeled easily from the subfloor, the floor is not sufficiently dry. The test shall be repeated at weekly intervals until the primer adheres properly. When the primer

adheres tightly to the subfloor, the tile shall be applied.

9D.5 Application.

9D.5.1 Application of floor coverings. Floor coverings and accessories shall be applied in accordance with the approved installation procedure. Work shall be performed by workmen thoroughly experienced in the application of such coverings. Adhesives shall be the type specified or the type recommended by manufacturer of the floor coverings for the specific application, subject to approval. Adhesives shall be applied in accordance with the adhesive manufacturer's printed directions, unless specified or directed otherwise. Floor covering shall be applied in the patterns indicated or selected, starting in the center of the room or area, and working from the center towards the edges. Tile lines and joints shall be kept square, symmetrical, tight, and even; and each floor shall be in a true, level plane. Edge tile width shall vary as necessary to maintain full size tiles in the field, but no edge tile shall be less than one half the field tile size. Floor covering shall be cut to, and fitted around, all permanent fixtures, built in furniture and cabinets, pipes, and outlets. Borders shall be cut, fitted, and scribed to walls and partitions after field covering has been applied. Metal edging shall be provided where floor covering terminates at points higher than the contiguous finished flooring, except at doorways where thresholds are provided. The strips shall be anchored to concrete floors with countersunk screws into metal or fiber expansion sleeves.

9D.5.2 Application of vinyl asbestos tile. Concrete subfloors on or below grade shall be primed with a cut back type primer worked into the surface of the concrete, using the minimum quantity that will cover the surface completely with a non absorptive base. Primer shall be allowed to become thoroughly dry before adhesive is applied. Cut back adhesive shall be applied to primed concrete subfloors. Tile shall be carefully laid in the selected pattern, and fitted so that each tile is in contact with the adjoining tiles, and all joints are tight and in alignment.

9D.5.3 Application of rubber or vinyl cove base. Rubber or vinyl cove base shall be applied after flooring has been completed, and the wall surface, to which the base is to be applied, is thoroughly dry. All cracks and voids in the wall shall be filled with an approved crack filler. Special base adhesive, as recommended by the floor covering manufacturer, shall be applied to the back of the base with a notched trowel, leaving approximately 1/4 inch bare space along the top edge of base. The base shall immediately be pressed firmly against the wall and moved gently into place, making sure that the toe is in contact with the floor and the wall. The entire surface of the base shall be rolled with a hand roller, and then the toe of the base shall be pressed firmly against the wall with a straight piece of wood. Corners shall be formed with factory performed corners.

9D.6 Cleaning. Immediately upon completion of the installation in a room or an area, floors and adjacent surfaces shall be dry cleaned with an approved cleaner to remove surplus adhesive. No soon than 5 days after installtion, floors shall be washed with an approved non-alkaline cleanin solution, rinsed thoroughly with clear cold water, and waxed with two coats of water emulsion wax, buffed to an even luster with an electric polishing machine after each coat.

9D.7 Protection. Cleaned flooring shall be covered with clean building paper before traffic is permitted. Board of plywood walkways shall be placed on floors used as passageways by workmen, and where directed.

9D.8 Quality Control. Provisions of Section entitled "Contractor Quality Control" shall apply.

9D.8.1 Samples. Duplicate sets of the manufacturer's standard color chips, not less than 3 by 3 inches, showing typical color, finish and surface pattern of each type of floor covering, shall be submitted for color selection prior to the submission of samples. The following samples of floor covering materials in the colors selected shall be submitted for approval before the work is started:

(a) Field tiles - three of each type.
(b) Base - three 9 inch lengths of each type.

9D.8.2 Tests and test reports. The testing requirements stated herein or incorporated in referenced documents may be waived, provided that certified copies of reports of tests from approved laboratories performed on previously manufactured materials are submitted and approved. Test reports shall be accompanied by notarized certificates from the manufacturer certifying that the previously tested material is of the same type, quality, manufacture, and make as that to be furnished for this project.

---o0o---

SECTION 9E ACOUSTICAL WORK

9E.1 Applicable publications. The following publications of the issues listed below, but referred to elsewhere by basic designation only, form a part of this specification to the extent indicated by the references thereto (where a number is suffixed to the specification number, it denotes the effective amendment to the specification):

(a) Federal specifications.

QQ-S-775d Steel sheets, carbon, zinc coated.
QQ-W-461f(1) Wire, steel, carbon (round, bare and coated).
SS-S-118a Sound controlling blocks and boards (acoustical tiles and panels, prefabricated).
TT-C-598b Calking compound, oil and resin base type (for masonry and other structures).

(b) Non Government documents.

Acoustical Manufacturers Association Bulletin.

Architectural acoustical materials (1968 issue).

American Society for Testing and Materials (ASTM)

C220-61 Flat asbestos cement sheets.

9E.2 General requirements. Acoustical units and suspension ceiling system of the type specified hereinafter shall be provided in rooms and spaces where indicated or specified. In areas where suspended ceilings are to be provided, all piping, ducts, electrical, and other work that is to be concealed by the ceiling shall be completed, tested and inspected, and the proper ceiling height and level established, before acoustical work is started.

9E.3 Materials provided for acoustical work shall be compatible. Acoustical units shall be delivered to the site in the manufacturer's original unopened containers, with the brand name, type, sound reduction and noise absorption grades clearly marked thereon. All materials shall be carefully handled and stored under cover in dry, weathertight enclosures to prevent the inclusion of foreign materials or damage by water or dampness.

9E.3.1 Acoustical units shall conform to the requirements of specification SS-S-118 for class 25 and the type, grade, and pattern specified.

(a) Type III (mineral composition) units of NRC grade 0.65 and fissured pattern. Units shall be 48 inches by 24 inches by 3/4 inch thick with butt edges and LR grade 1 light reflectance. Units shall be provided with a washable white factory finish.

9E.3.2 Suspension system shall be adequate to support the ceiling system with a deflection of not exceeding 1/360 of any span.

(a) Hangers that support runners shall be steel wire of not less than 0.1620 inch in diameter (8 gage), conforming to specification QQ-W-461, steel number 1010, with class 2 zinc coating, or 3/32 inch by 7/8 inch flat steel conforming to specification QQ-S-775, type I, class e.

(b) Tie wires shall be annealed wire of not less than 0.0624 inch in diameter (16 gage) conforming to specification QQ-W-461, steel number 1020, with class 2 zinc coating.

(c) Main runners shall be the manufacturer's standard stock design, fabricated from not less than 0.025 inch zinc coated cold rolled steel. The web height of the runners shall be not less than 1-1/2 inches. Aluminum runners not less than 0.062 inch thick may be provided at the Contractor's option.

(d) Cross runners shall be the manufacturer's standard stock design, fabricated from notless than 0.025 inch zinc coated cold rolled steel. The web height of the runners shall not be less than 1 inch for exposed or semi exposed systems. Aluminum runners not less than 0.062 inch thick may be provided at the Contractor's option.

9E.3.3 Molding shall be of the size, type, and design recommended by the acoustical manufacturer fabricated from aluminum. All metal molding shall be finished to match the acoustical units used.

9E.3.4 Accessories shall be of the size, type, and design as recommended by the manufacturer of acoustical systems as approved.

9E.3.5 Calling compound shall conform to specification TT-C-598.

9E.4 Installation of the acoustical units shall be in accordance with the manufacturer's direction except as specified otherwise herein. Job conditions shall conform to Acoustical Materials Association Installation Recommendations as applicable, except as specified otherwise hereinafter. A uniform temperature of not less than 60 degrees Fahrenheit, nor more than 80 degrees Fahrenheit, and a relative humidity of not more than 75 percent shall be maintained continuously before, during, and after installation of acourstical units. Acoustical units shall be cut as required to fit the particular condition. The units shall be anchored securely to provide rigid construction and shall be provided with all required stiffeners, ties, fastenings and other accessories and appurtenances required to complete the installation. Mechanical fastenings shall not be exposed in the finish work. Joints around electrical outlets, ducts, pipes and other work extending through acoustical units shall be sealed by calking, and the calking concealed by the flanges of the fixtures, or cover plates, finishing

to match the adjoining material.

9E.4.1 Mechanical suspension systems.

(a) Hangers shall be spaced not to exceed 4 feet on centers along the rows of main runners. The starting row of hangers shall be located 6 inches away from wall surfaces. Hangers shall be of sufficient length to permit saddle tying around supporting channels in a manner that turning or twisting of the runners will be prevented, and the full strength of the hangers developed. Hangers shall be laid out for each individual room or space, and shall be placed to support framing around beams, ducts, columsn, pipes, lighting fixtures, partitions, air diffusers, grilles, and all other openings or obstructions. Hangers shall be attached securely to structural ceiling by inserts in dovetail slots.

(b) Exposed grid system assembly of the type recommended by the acoustical manufacturer shall be used to support the acourstical panels in areas scheduled to receive it. The grid system shall be laid out symmetrically with respect to borders and ceiling openings for a true and level installation. The main runners shall be spaced four feet on centers, in parallel rows suspended from the structure above by steel hangers specifically designed to form a mechanical interlock to prevent twisting and turning of the runners in this type of installation. Cross runners shall be spaced two feet on centers in parallel rows, forming two feet by four feet grid modules with the main runners. Cross runners shall be back cut and locked in place at intersection with main runners to provide good stability and a flush exposed to view surface. Exposed members ending at the molding shall be back cut and locked in place, providing a flush exposed to view surface. Metal molding shall be provided at all vertical surfaces and shall be mitered at corners. All exposed to view surfaces shall be flush and level and shall be finished to match the acoustical units. Acoustical units shall be assembled and placed on the flanges of the suspended members and hold down clips attached, as recommended by the acoustical manufacturer. Upon completion, the ceiling shall present true, level and even surfaces and the joints shall be in alignment.

9E.5 Cleaning and protection. Following installation, dirty or discolored surfaces of acoustical units shall be cleaned and left free from defects. Units that are damaged or improperly installed shall be removed and new units provided, as directed. The acoustical units shall be protected until completion of the project.

9E.6 Quality Control. Provisions of Section entitled "Contractor Quality Control" shall apply.

9E.6.1 Shop drawings and samples. Duplicate 12- by 12 inch samples showing the manufacturer's stock textrue, finish, and color of the exposed to view surfaces of each acoustical unit proposed for use; shop drawings showing sizes, arrangement and method of installation of the

suspension system and the acoustical units, shall be submitted and approved before any acoustical units or materials are delivered to the site. Acoustical units or materials that are delivered prior to approval may be rejected.

9E.6.2 Tests and test reports. The testing requirements stated herein or incorporated in referenced documents may be waived provided certified copies of reports of test from approved laboratories performed on previously manufactured materials are submitted and approved. Test reports shall be accompanied by notarized certificates from the manufacturer certifying that the previously tested material is of the same type, quality, manufacture, and make as that to be furnished for this project. Underwriter's labels or listing by the the Underwriters' Laboratory of the material as non combustible will be accepted in lieu of certification attesting to successful completion of test for flame spread index. Materials delivered prior to such approval may be rejected.

9E.6.3 Examination of surfaces. Surfaces to which acoustical units are to applied shall be examined and the conditions adversely affecting the proper installation, or the finished appearance of the acoustical work shall be corrected before the acoustical work is started.

---o0o---

SECTION 9F. LATHING

9F.1 Applicable publications. The following publications of the issues listed below, but referred to elsewhere by basic designation only, form a part of this specification to the extent indicated by the references thereto (where a number is suffixed to the specification number, it denotes the effective amendment to the specification):

(a) Non Government Specifications and Standards.

United States of American Standards Institute (USASI)

A42.4-1955 Specifications for interior lathing and furring.

Metal Lath Association (MLA)

Specifications for metal lathing and furring, 1965.

9F.2 General Requirements. The work includes metal furring and metal lathing. Suspension systems for acoustical tile ceilings are specified in section entitled "Acourstical Work". Furring and lathing work shall include all bracing, tie wires, fastenings, metal screeds, corner beads, and other acfessories necessary for a complete installation. The work shall be built plumb and true, without waves or backles, shall be rigid, and all members shall be fastened securely together and to the walls and other structural supports. Materials and their installation shall conform to USASI specification A42.4, and MLA specifications for metal lathing and furring, except as indicated otherwise.

9F.3 Materials shall be standard commercial products in a clean condition; and free from rust, bends, kinks, breaks, and other damage caused by storage or handling.

9F.3.1 Metal furring shall be provided to support metal lath and plaster or stucco where they are not applied in direct contact with structural walls, partitions, ceilings; where plaster or stucco is to be applied around piping, chases, columns, beams, ductwork, and similar work, the furring shall be steel channels. Horizontal stiffeners or bracing shall be provided.

9F.3.2 Metal lathing shall be provided as a stucco or plaster base as indicated to receive scratch coats for tile at showers and for stucco walls and plastered ceilings. Metal lath of the self furring type shall be provided on concrete and masonry surfaces to receive scratch coats for tile. Lath shall conform to the applicable requirements of USASI specification A42.4. Woven wire lath shall be provided on concrete and masonry surfaces for stucco.

(a) Woven wire lath for stucco shall be fabricated from copper bearing, cold drawn, galvanized steel wire, with minimum openings of one

inch, maximum openings of 2-1/4 inches, and a maximum area of 4 square inches for a single opening. Minimum size of wires shall be No. 18 gage for one inch openings, and No. 16 gage for 2 inch openings.

(b) Self furred metal lath shall have projections separating it a minimum of one quarter inch from the surface over which it is applied.

9F.3.3 Plaster beads. Metal parting beads or screeds shall be provided around the periphery of unrestrained stucco panels and as indicated on the drawings where unrestrained stucco panels intersect the surfaces of walls and columns, and and at the edge of plaster or stucco which abuts or adjoints an unplastered surface. Stucco beads shall be of 26 gauge zinc. The beads or screed shall be fastened securely, and shall be of a type that will provide a rigid clinch for stucco or plaster and adjoining materials, will prevent the stucco or plaster from running to a think edge, and will provide a uniform thickness for stucco or plaster and adjoining materials at the dividing lines.

9F.3.4 Expansion joints shall be provided in stucco assemblies where indicated. They shall be "W" shaped ground of zinc, not lighter than 26 gage, and shall be an approved type, with perforated or expanded metal flanges. Expansion joints shall be fastened securely to lath. Lath shall terminate at each side of expansion joints.

9F.4 Unrestrained ceilings. Ceilings shall be unrestrained when portland cement plaster is applied to ceilings. The ceiling lath and plaster of unrestrained ceilings shall be isolated from intersecting vertical surfaces with casing beads or expansion joint. Cornerite shall not be used at these interesections.

9F.5 Suspended metal lath ceilings.

9F.5.1 Hangers shall be zinc or cadmium coated. The starting row of hangers shall be located 6 inches away from wall surfaces. Hangers shall be laid out for each individual room or space, and shall be placed to support framing around beams, ducts, columns, pipes, lighting fixtures, partitions, and all other openings or obstructions. Hangers shall be attached securely to structural ceilings by inserts in dovetail slots.

9F.5.2 Main runners shall be of size, span, and spacing listed in USASI specification A42.4, except as indicated otherwise.

9F.5.3 Cross furring shall be 3/4 inch channels of span and spacing listed in USASI specification A42.4 except as indicated otherwise.

9F.5.4 Metal lath sheets shall run with their long dimension across the furring channels. Lath shall be tied to cross furring and along side and end laps at 6 inch intervals, with 18 gage stainless steel or monel metal annealed wire. Sides shall be lapped by nesting outside ribs or selvage. End laps shall be one inch, and shall preferably occur over supports. When end laps occur between supports, ends of sheets shall be lapped not

less than 4 inches and shall be tied at intervals of not more than 6 inches near ends of both lapped sheets, with no. 18 gage stainless steel or monel metal annealed wire. End laps of adjoining sheets shall be staggered.

9F.6 Quality Control. Provisions of Section entitled "Contractor Quality Control" shall apply.

9F.6.1 Tests and test reports. The testing requirements stated herein or incorporated in referenced documents may be waived, provided that certified copies of reports of tests from approved laboratories performed on previously manufactured materials are submitted and approved. Test reports shall be accompanied by notarized certificates from the manufacturer certifying that the previously tested material is of the same type, quality, manufacture, and make as that to be furnished for this project.

---oOo---

SECTION 9G. PLASTERING AND STUCCOING

9G.1 Applicable publications. The following publications of the issues listed below, but referred to elsewhere by basic designation only, form a part of this specification to the extent indicated by the references thereto (where a number is suffixed to the specification number, it denotes the effective amendment to the specification):

(a) Federal and Military Specifications.

SS-C-192g(1) Cement, portland.

(b) Non Government Specifications and Standards.

American Society for Testing and Materials (ASTM)

C144-66T Aggregate for masonry mortar.

9G.2 General requirements. Plaster and stucco work shall be properly coordinated with the work of other trades. The work of other trades shall be adequately protected from damage during plaster and stucco operations. Finished work shall be protected with a covering of heavy kraft waterproof paper or other approved protective covering with lapped and sealed joints. Scaffolding shall be amply strong, well braced, tied securely, and inspected regularly. Overloading of scaffolding will not be permitted.

9G.3 Materials. Manufactured materials shall be delivered in the manufacturers' original unbroken packages or containers which are labeled plainly with the manufacturer's names and brands. Plaster and other cementitious materials shall be kept dry until ready to be used; they shall be stored off the ground, under cover, and away from sweating walls and other damp surfaces.

9G.3.1 Portland cement shall be type I, conforming to specification SS-C-192; white portland cement shall conform to the applicable requirements thereof and shall be non staining.

9G.3.2 Aggregates.

(a) Sand for base coats shall conform to ASTM specification C35. Fine sand, with rounded particles uniform in size, frequently called "quicksand", shall not be used.

(b) Sand for portland cement finish shall conform to ASTM specification C144 and shall be natural in color. Not more than 50 percent of sand sha-l be retained between two consecutive sieves, and not more than 25 percent of sand shall be restrianed between the No. 50 and No. 100 sieves.

9G.3.3 Water for mixing shall be potable.

9G.4 Mixing of plaster and stucco. Plaster and stucco materials, specified on a volume basis, shall be measured accurately in approved containers that insure the specified proportions will be controlled and maintained accurately during the progress of the work. Measuring materials with shovels ("shovel count") will not be permitted.

9G.4.1 Base coat proportions.

(a) Scratch and brown coats of portland cement plaster or stucco sha-l be mized in the proportion of one part by volume or portland cement to not more than 1/2 part of hydrated lime and not less than 3 nor more than 5 parts by volume of damp loose sand.

9G.4.2 Finish coat proporations.

(a) Portland cement plaster finish shall be of the same proportion as the base coat.

(b) Stucco finish shall be of the same proportion as the base coat, and the portland cement shall be white. (Approved coloring compounds shall be added to produce the required color.)

9G.4.3 Mixing shall be done in approved mechanical mixers of the type in which the quantity of water can be controlled accurately and uniformly, except that finish coats containing lime may be hand mixed. While the mixer is in continuous operation, water, 1/2 of the sand, the plater, and the other 1/2 of the sand shall be introduced into the mixer in that sequence and shall be mixed thoroughly with the proper amount of water until themixture is uniform in color and consistency. Plaster which has begun to set before it is used shall be discarded, and retempering of plaster will not be permitted. Frozen, caked, or lumped materials shall not be used. Mixers, mixing boxes, and tools shall be cleaned after each batch is mixed, and kept free of old plaster and stucco.

9G.5 Preparations for plastering and stuccoing.

9G.5.1 Temperature. A temperature of not less than 55 degrees Fahrenheit shall be required during completion of plaster and stucco work.

9G.5.2 Preparation of bases. Surfaces to which plaster and stucco is to be applied shall be cleaned of all projects, dust, loose particles, grease, bond breakers, and other foreign matter. Plaster and stucco shall not be applied directly to surfaces of masonry or concrete that have been coated with bituminous compound or other waterproofing agents. Before the plaster and stucco work is started, masonry surfaces shall be wetted thoroughly with a fine fog spray of clean water to produce a uniformly moist condition. Metal grounds, metal lath, corner beads, screeds, and other accessories shall be checked carefully for alignment before the work is started. Stucco shall not be applied to surfaces containing frost.

9G.6 Application of plaster and stucco. Plaster and stucco shall be applied by hand.

9G.6.1 Workmanship. Plaster and stucco shall be applied in three coats.

Base coats shall be applied with sufficient pressure and the plaster and stucco shall be sufficiently plastic to curl the keys around the back of metal lath and to provide good bond on masonry bases. Base coats shall be worked to screeds at intervals of from 5 feet to 8 feet. Plaster and stucco shall not be continuous across expansion joints occurring in walls. Plaster and stucco work shall be finished level, plumb, square, and true, within a tolerance of 1/8 inch in 10 feet, without waves, cracks, blisters, pits, craxing, discoloration, projections, or other imperfections. Plaster and stucco work shall be formed carefully around angles and contours and well up to screeds. Special care shall be taken to prevent sagging. There shall be no visible junction marks in finish coat where one day's work adjoins another. Finished work shall be covered and protected in an approved manner to prevent damage. Samples of all textured finishes shall be submitted for approval before the work is started.

9G.6.2 Portland cement plaster and stucco shall be applied to metal lath. Base coats shall be applied with sufficient pressure and the plaster shall be sufficiently plastic to curl the keys around the back of metal lath or wire fabric, and to provide good bond on masonry or concrete bases.

(a) Plaster and Stucco, shall be applied in three coats to a thickness of not less than one inch. The scratch coat shall be applied not less than 3/8 inch thick, scored horizontally, and allowed to dry slowly for 24 hours. The brown coat shall then be applied to bring the base coat out to the screeds, shall be compacted to a true surface with rod and darby, and shall be floated to receive the finish coat. After the brown coat has been allowed to dry slowly for 24 hours, the finish coat shall be applied to a thickness of not less than 1/8 inch thick, with a sand float finish. The plaster shall be water cured with 4 applications of fog spray. The first spray shall be applied 12 hours after the finishing coat is completed, and three subsequent sprayings shall be applied at 12 hour intervals thereafter. The finish shall match an approved sample.

(b) Stucco. The finish coat shall be of the color and texture selected, and shall match an approved sample.

(c) Scratch coat for ceramic tile backing. Scratch coat as backing for wall tile shall be applied not less than 24 hours nor more than 48 hours before tile is to be set. Scratch coat shall be applied in the thickness indicated or as necessary to bring the face of the tile to the required plane, but not less than 1/4 inch from the face of the metal lath or masonry. Scratch coat shall be applied after substantial grounds, plugs, hangers, and other such accessories have been installed for plumbing fixtures, electrical outlets, and other fixtures and fittings that are to

be secured to tiled surfaces. Scratch coat shall be applied with sufficient pressure to insure a proper bond and key with the base and a proper base for the setting bed. While the mortar is still plastic, the scratch coat shall be cut with a trowel at all internal vertical angles for the depth of the coat and the full height of the tile bed, and shall be scored horizontally or cross scratched on one inch centers for extent of the tile bed. Mortar for scratch coats shall be used within one hour after mixing, and at no time shall the mortar be retempered. Scratch coat shall be protected and kept moist during curing period. A levelling coat shall be applied over scratch coat when necessary to level the surface within a tolerance of 1/4 inch in 10 feet or to provide a base coat thickness of more than 3/4 inch. Levelling coat shall be scratched and cured for 24 hours.

9G.7 Patching and pointing. Upon completion of the building and when directed, all loose, cracked, damaged, or defective plastering and stuccoing shall be cut out and replastered or restoccoed in a satisfactory and approved manner. All pointing and patching of plastered and stuccoed surfaces, and plaster and stucco work abutting or adjoining any other finish work, shall be done in a neat and workmanlike manner. Plaster and stucco droppings or spatterings shall be removed from all surfaces. Exposed plastered and stuccoed surfaces shall be left in a clean, unblemished condition. Protective covering shall be removed from surfaces, and all rubbish and debris shall be removed from the site.

---o0o---

DIVISION 10 SPECIALTIES

SECTION 10A. Metal Toilet Partitions
10B. Metal toilet and Bath Accessories
10C. Metal Laboratory table

SECTION 10A. METAL TOILET PARTITIONS

10A.1 Applicable publications. The following publications of the issues listed below, but referred to elsewhere by basic designation only, form a part of this specification to the extent indicated by the references thereto (where a number is suffixed to the specification number, it denotes the effective amendment to the specification):

(a) Non Government Specifications and Standards.

American Society for Testing and Materials (ASTM)

A525-65T Zinc coated (galvanized iron or steel sheets,coils and cut lengths coated by the hot dip method.

10A.2 General requirements. Toilet partitions shall be the flush metal type with sound deadening cores and baked enamel finish. The partitions shall be provided complete with all fastenings, fittings, and hardware necessary for a satisfactory installation. Each water closet enclosure shall be provided with a door.

10A.3 Materials.

10A.3.1 Steel, except concealed reinforcement, shall be cold rolled and zinc coated, and shall conform to ASTM specification A525. Steel for face plates of doors, panels, and pilasters shall be stretcher leveled standard of flatness. Concealed reinforcement may be hot rolled or cold rolled steel.

(a) Zinc coating shall be Coating Class 1.25 Commercial in accordance with ASTM Specification A525. The surface shall be smooth with minimized spangles and shall be mill phosphatized. The steel and the coating shall not fracture, flake, or peel under forming or die drawings.

(b) Minimum thicknesses of steel in U. S. Standard gages shall be as follows:

Face plates of doors	22
Edge locking strips of doors	20
Face plates of panels or screens	20
Edge locking strips of panels or screens	20
Face plates of stiles or pilasters	20
Edge locking strips of stiles or pilasters	20
Concealed reinfrocement for tapping	14
Concealed reinforcement for anchoring	12

10A.3.2 Sound deadening cores shall be of corrugated paperboard, formed of panel weighing about 34 pounds per 1000 square feet. Cores of 6 ply construction shall be provided in panels and doors one inch thick, and cores of 7 ply construction shall be provided in panels and pilasters 1-1/4 inches thick. In lieu of corrugated paperboard construction, the cores may be of kraft paper, weighing not less than 25 pounds per 1000 square feet, formed into a hexagonal honeycomb pattern containing cells of about one inch size.

10A.4 Partition types.

10A.4.1 Toilet enclosures shall be floor supported, with pilasters extending from the floor to the top of the panels. Panels and doors shall be one inch thick, approximately 58 inches high, and their bottom edges shall be approximately 12 inches above the floor. Pilasters shall be 1-1/4 inches thick. Unless indicated otherwise, the depth of enclosures, front to back, shall be approximately 57 inches, and the width, from center to center of dividing partitions, shall be approximately 34 inches. Adjustments in the spacing of dividing partitions shall be made as required by job conditions, so that fixtures will be centered between dividing partitions. The minimum width of pilasters shall be 10 inches at intermediate locations, 4 inches at adjoining walls, and 8 inches at free-standing ends. In-swinging doors shall be provided in the openings between pilasters. Headrails for bracing shall be not less than 1 inch by 1-1/2 inches in section, and shall be approximately 12 inches sbove the tops of doors and panels.

10A.5 Construction. Partition components shall be strong, straight, clean cut, smooth, neat, and free from defects in workmanship, materials, and appearance. The finished thicknesses are subject to a tolerance of plus or minus 1/16 inch. The finished colors shall be as selected from the manufacturer's standard color chargs, in one or two colors.

10A.5.1 Panels, pilasters, and doors shall be constructed of two steel facing sheets with formed edges, cemented under pressure over a sound deadening core, and assembled by interlocking the formed edges under tension by means of die drawn edge locking strips of edge binding strips. Doors, pilasters, and screen panels shall be strenghtened against torsional stresses by tack or spot welding the sheets together under the strips, or plug welding edges of sheets through the edge strip. The welds shall be spaced not less than 18 inches apart. Edge locking or facing strips shall be mitered and welded at corners or secured with chromium nickel steel corner fittings applied under tension. Concealed reinforcement for tapping or rivet nuts shall be provided where machine screws are specified for fastenings. Reinforced cutouts for hinges shall be provided in doors. The facing sheet of wall hung screen panels shall be flared over a continuous steel flange plate, not less than 1/4 inch by 4 inches. Each flange plate

shall form a rigid support for fastening panel to the wall.

10A.6 Supports, fittings, and fastenings shall be of plain designs and heavy patterns.

10A.6.1 Enclosure panels, and pilasters shall be anchored to walls with stirrup brackets of extruded brass, polished anodized aluminum, or die-cast zinc alloy, located near the top and the bottom of panels or pilasters. Panels shall be anchored to pilasters with similar stirrup brackets. Each stirrup bracket shall be fastened to wall with two 1/4 inch diameter zinc or cadmium plated steel screws, and fiber or metal expansion sheilds. Each stirrup bracket shall be fastened to the pilaster with machine screws into tapped reinforcement or rivet nuts, and through bolted to panel with 3/16 inch binder post bolts with one way heads.

10A.6.2 Enclosures of the floor supported type. The bottom of each pilaster shall be fastened to the structural slab through an integrally welded split channel or cross bar anchoring device using two cadmium or zinc coated stud bolts of not less than 3/8 inch diameter in expansion shields that have not less than two inches of penetration into the structural slab. One stud bolt shall be located at jamb edge of wall end pilasters. Where floor fill and finish are 1-1/2 inches thick or more, a 12 gage flanged channel or plate shall be fastened to the structural slab using two fastenings per stud. The stud members shall be bolted or welded to the channel or plate. Anchoring devices shall include a means for plumbing, leveling, and rigidly fastening pilasters in place. The entire device shall be zinc coated and shall be concealed within a shoe of chromium nickel steel fastened with screws or clips.

10A.7 Door hardware. Each door shall be provided with pivot hinges with operating parts inset and concealed within the door, a slide latch or turn bolt with combination keeper and rubber bumper stop, and a coat hook with rubber bumper. Non operating parts, supporting and encasing members, latch, and coat hook may be die cast zinc alloy, wrought, cast, or extruded brass. Exposed parts and fastenings which are not integral with door or pilaster shall be polished, nickel plated, and chromium plated.

10A.7.1 Hinges shall have either roller bearings operating on inclined cams or opposed nylon telescoping cams alined over a steel pintle, and shall be actuated by gravity or springs. All working parts shall be concealed within the door. Top pivot hinges shall have Delrin or polished hardened chromium steel guide pins secured above and below their point of bearing, placed in a cut out near top of door and shall compensate for any vertical movement of doors. Harened chromium steel shall be used for ball bearing rollers and cams. All moving parts shall operate in self oiling graphited bronze, nylon, or thrus-frictionless bearings.

10A.7.2 Latch or bolt. The latch shall be a sliding type, and shall consist of an encased bar, approximately 3/4 inch wide by 3 inches long, operated by a knob under spring tension. A chromium nickel steel bolt,

actuated by a cam mechanism of die cast zinc alloy, installed between the face plates of doors, may be used. The latch shall be mounted on the door midway between top and bottom edges. Combination stop and keeper with rubber bumper shall be mounted on the pilaster opposite the latch.

10A.7.3 Fastenings. Hinges, keepers and bumpers shall be through-bolted with binder post bolts to pilasters, or hinges may be suppored on cast alloy brackets finished to match. Latches and coat hooks shall be surface applied with machine screws into tapped reinforcement or rivet nuts. Self tapping sheet metal screws shall not be permitted. Binder post bolts and machine screws shall have right hand, on way, theft resistant heads.

10A.8 Baked enamel finish. Exposed surface of zinc coated steel and integral hardware shall be cleaned of oil, grease, and finger paints by solvent washing or vapor degreasing, and then be given one coat of an inhibiting baked on primer followed by a finish color coat of baking enamel applied to a total minimum dry film thickness of 1.5 mils. The baked enamel finish shall be factory applied. Baking temperatures shall be not less than 275 degrees Fahrenheit, and the temperature and length of baking operation shall be sufficient for polymerization to produce a completely cured protective film. The finish shall be unaffected by alkalies, urine, and other common toilet room acids.

10A.9 Installation. The work shall be secured to contiguous construction in a rigid and substantial manner, straight and plumb, with uniform clearance of 1/2 inch between pilasters and panels, 1 inch between pilasters and walls, and panels and walls, and not more than 3/16 inch between pilasters and doors. Evidence of drilling in floors and walls shall be concealed in the finished work. Hardware shall be adjusted for proper operation, and hinges shall be set to hold the doors ajar about 30 degrees when unlatched. After installation, all exposed surfaces shall be thoroughly cleaned, and all damaged work shall be restored to its original condition, or replaced with new work. The exposed heads or unfinished steel bolts and screws shall be neatly painted to match the color of adjoining partition surfaces.

10A.10 Quality Control. Provisions of Section entitled "Contractor Quality Control" shall apply

10A.10.1 Drawings and samples. Prior to fabrication of the work, the manufacturer's standard color chart shall be submitted for color selection; scale and full size drawings, showing the layout of all work in plan, elevation, and section, shall be submitted for approval. Drawings shall include complete details of construction showing thicknesses of metal, methods, of fabrication and erection, anchoring, jointing, reinforcing, and provisions for the installation of hardware. Samples of materials for exposed and concealed work shall be submitted for approval prior to installation; the samples shall include sound-deadening cores, fastenings, hardware, a metal color sample showing the base metal, the prime and finish coat of enamel and three 2.25

inches square test specimens of zinc coated metal.

10A.10.2 Tests and test reports. The testing requirements stated herein or incorporated in referenced documents may be waived, provided certified copies of reports of tests from approved laboratories performed on previously manufactured materials are submitted and approved. Test reports shall be accompanied by notarized certificates from the manufacturer certifying that the previously tested material is of the same type, quality, and manufacture as that to be furnished for this project.

---oOo---

SECTION 10B. METAL TOILET AND BATH ACCESSORIES

10B.1 Applicable publications. The following publications of the issues listed below, but referred to elsewhere by basic designation only, form a part of this specification to the extent indicated by the references thereto (where a number is suffixed to the specification number, it denotes the effective amendment to the specification):

(a) Federal Specifications.

DD-M-00411b Mirrors, glass.
FF-D-396e Dispensers, soap.
WW-P-541b(4)(6) Plumbing fixtures, land use.

(b) Non Government Specifications and Standards.

American Society for Testing and Materials(ASTM)

A167-63 Corrosion resisting chromium nickel steel plate, sheet, and strip.

10B.2 General requirements. Accessories specified herein as numbered types shall conform to the applicable requirements of specification WW-P-541. The illustrations shown in the specifications are given for convenience in identifying the items described therein, and in locating dimensions; they are not intended to show required designs. Acceptable designs may differ from those illustrated, provided that the items conform to stated requirements and dimensions. Accessories shall be of approved design and shall be delivered to the site ready for installation. Surface mounted accessories shall be mounted on concealed backplates, except where specified otherwise. Accessories without backplates shall have concealed fasteners.

10B.3 Materials and fabrication. Stainless steel, as specified hereinafter, shall be alloy type 302, 304, or 304 L conforming to ASTM specification A167; satin finish specified shall be the No. 4 finish. Accessories shall be fabricated in accordance with good commercial practice, with welds ground smooth. Bending, flanging, drawing, forming, and similar ooperatings shall be performed in a manner to insure that there are no ruptures, cracks, wrinkles, sharp exposed edges or other defects. Flanges of recessed accessories shall be designed to return to walls to provide a continuous, tight against the wall installation. Doors shall be warp free. Locks shall be keyed alike for each type of accessory, 2 keys shall be furnished for each lock or each group of accessories keyed alike. Locks shall be the manufacturer's standard locks of the type specified hereinafter.

10B.3.1 Soap holders shall be type 407 and shall be provided one at each shower head.

10B.3.2 Robe hooks shall be type 421 and shall be provided where indicated.

10B.3.3 Coat hooks shall be type 419 and shall be provided where indicated.

10B.3.4 Towel bars shall be metal, type 431. Length of bar shall be 30 inches. Towel bars shall be provided where indicated.

10B.3.5 Toilet paper holders (surface mounted) shall be type 433 and shall be provided one at each water closet.

10B.3.6 Cabinets for folded paper towels shall be type 449, and shall be provided one at each lavatory.

10B.3.7 Mirrors shall be class 2, stype D electro copper plated, conforming to specification DD-M-00411 Size 18 inch by 30 inch and mirror shall be equipped with an integral shelf for the full width of the mirror and a back of the type standard with the manufacturer. Shelf shall be the mirror manufacturers standard type that forms the coved bottom member of the mirror frame as a single unit. Shelf shall be not less than 0.093 inch thick and 5 inches deep, with rounded ends; material and finish shall be as specified for mirror frame. Mirrors shall be provided one at each lavatory.

10B.3.8 Soap dispensers shall be type 1, liquid rigid, conforming to specification FF-D-396, and shall be provided one at each lavatory.

10B.3.9 Shower curtain rails shall be similar to Figure 15.15, of suitable length, not less 1 inch in diameter, having wall thickness of not less than.036 inch, of chromium plated brass. and with metal flanges at wall with suitable fasteners. Rails shall be provided for openings in all showers. All rails shall be provided with a vinyl plastic curtain conforming to specification L-C-00780, style 1. Curtain shall be the full width of the rail and of a length such that it clears the floor by approximately 1-1/2 inches and shall be provided with a suitable curtain hook for each grommet. Curtain hooks shall be of corrosion resisting metal with smooth nickel or chromium finish.

10B.4 Installation. Surfaces of fastening devices exposed after installation shall have the same finish as the attached accessory. Exposed screw heads shall be oval. Installed height of accessories shall be approximately as indicated. Exposed surfaces of accessories shall be protected with strippable plastic of by other approved means until the installation is accepted. The accessory manufacturer's mounting details shall

be coordinated with other trades as their work progresses.

10B.4.1 Surface mounted accessories, except as indicated or specified otherwise, shall be installed with sheet metal screws or wood screws in metal or fiber shields or sleeves, or with toggle bolts, or other approved fasteners as required by the construction. Backplates shall be installed in the same manner or shall be provided with lugs or anchors set in mortar, as required by the construction.

10B.5 Quality Control. Provisions of Section entitled "Contractor Quality Control" shall apply.

10B.5.1 Samples. One sample of each type of accessory specified shall be submitted for approval. Accessories shall not be delivered to the site until samples are approved. Samples shall be complete with appurtenances and shall be fiinsihed as specified. Approved samples may be installed in the work, provided each sample is clearly identified and its location recorded. Accessories provided shall beof the same design, construction, and finish as the approved samples.

10B.5.2 Test and test reports. The testing requirements stated herein or incorporated in referenced documents may be waived, provided certified copies of reports of test from approved laboratories performed on previously manufactured materials are submitted and approved. Test reports shall be accompanied by notarized certificates from the manufacturer certifying that the previously tested material is of the same type, quality, manufacture, and make as that to be furnished for this project.

---oOo---

SECTION 10C METAL LABORATORY TABLE

10C.1 General requirements. The work includes the provision of one metal laboratory table and laboratory apparatus.

10C.2 Applicable publications. The following publications of the issues listed below, but referred to elsewhere by basic designation only, form a part of this specification to the extent indicated by the references thereto (where a number is suffixed to the specification, it denotes the effective amendment to the specification):

Federal and Military Specifications

WW-P-541 b(4)(6) Plumbing fixtures

10C.3 Metal laboratory table. Shall be a wall table with service fixtures mounted on a box curb, with provision for plumbing space at the rear. Table shall be of steel construction. Steel shall be of furniture quality, the best mild, cold rolled, level stock, free from rust, scale, scratches and all physical defects. All gauges shall be U. S. Standard.

10C.3.1. Construction. All welded construction shall be used throughout except where construction details make it impractical. Welded joints shall be ground flush with the adjacent material and neatly polished. No bolts, rivit heads, screws, or other fastening devices shall be visible on any exposed surface. Where units are joined in assemblies, they shall be fastened by bolting through pierced cabinet sides.

10C.3.2. Sides. Base cabinet wall and floor case sides shall be of 18 gauge steel.

10C.3.3. Bottoms. Interior bottoms of all cabinets and cases shall be of 18 gauge steel, flanged down on all sides. A heavy gauge triangular gusset shall be welded in each bottom corner of floor mounted units. Interior bottoms shall be punched to receive snap-in buttons covering access holes to leveling bolt. Exposed undersides ofwall hung cases shall be furnished with a pan-shaped bottom fitted into interior bottom.

10C.3.4. Backs. Backs of all cabinets and cases shall be made of 22 gauge steel. Backs of wall and floor cases shall be welded to the rear flanges of side. Removable backs shall be furnished in based cabinets to afford access to space behind cabinet for service line connection. Backs shall be removable from inside of cabinet.

10C.3.5. Doors. All doors shall be reinforced double wall metal construction with an outer panel of 18 gauge and an inner panel of 20 gauge steel. Both inner and outer panels shall be pan-shaped and held tightly together so that the outer panel of the door has no visible seams and is flush with the door frame. All four door corners shall be

welded. All hinged doors shall be filled with sound deadening material to insure quiet operation. Doors shall close on rubber bumpers.

10C.3.6. Drawers. Drawer bodies shall be of 20 gauge steel. Drawer heads shall be box type construction with outer pan fabricated of 18 gauge steel and inner pan of 20 gauge steel. Drawer heads shall be sound deadened; all drawers shall be mounted on channel-shaped slides with four ball bearings supporting drawer, and equipped with rubber stoppers and snubbers for controlled drawer action. Drawers shall be easily removable and have automatic stops to prevent accidental removal. Drawers shall be provided with a plastic angled bottle rack. This item shall be utilized for placement of chemicals and reagents.

10C.3.7. Finish: All steel units of the laboratory equipment shall be precoated with 150 to 200 ml per square foot of phosphate, and finished with one standard color of acide, alkali, solvent resistant baked on enamel.

10C.4. Counter Top and box curb. Shall be composite stone, charcoal gray in color, and shall be composed of portland cement and finely dispersed asbestos fibers integrally mixed with chemical resistant coloring and fillings, bonded under great pressure into a chemically resistant monolithic sheet. Thickness of top shall be not less than one inch. The exposed surfaces shall have a smooth finish and all exposed edges and corners shall be rounded. Top shall be provided with a cutout for the sink.

10C.5. Sink. Shall be a one piece solid epoxy resin casting. Provide a combination supply fitting, type 36 conforming to WW-P-541, except that spout end shall be serrated type. Provide a lead sink strainer with stopper and locknut. Provide a non-siphon lead "P" trap with bottom cleanout. Piping connections and installation shall conform to section entitled "Plumbing".

10C.6 Quality Control. Provisions of Section entitled "Contractor Quality Control" shall apply. Prior to fabrication of the work, the manufacturer's standard color chart shall be submitted for color selection. Scale drawings showing the layout of the work in plan, elevation, and section, shall be submitted for approval, along with catalog data indicating complete details of construction, thicknesses of metal, methods of fabrication and erection, anchoring, jointing, reinforcing, and provisions for the installation of hardware.

DIVISION II EQUIPMENT
Section IIA Pumping equipment
Section IIB Water treatment equipment
Section IIC Controls

SECTION IIA PUMPING EQUIPMENT

IIA.1 Applicable publications. The following publications of the issues listed below, but referred to elsewhere by basic designation only, form a part of this specification to the extent indicated by the references thereto (where a number is suffixed to the specification number, it denotes the effective amendment of the specifications):

(a) Federal and Military Specifications

WW-P-404c(2) Pipe, steel, seamless and welded.
WW-P-406c Pipe, steel, seamless and welded.

(b) Non Government specifications and standards

National Electrical Manufacturer's Association (NEMA)
Book of Standards (Current edition).

IIA.2 General requirements. The work includes the provision of a turbine type deep well pump at each of the well sites, finish water pumps, backwash pump complete with all appurtenances as indicated and specified herein. Each installation shall be complete and ready to operate. Pumps where shown shall have gasoline engines and combination right angle drives.

IIA.3 Well pumps shall be the vertical turbine type, oil lubricated and provided with a non-reverse ratchet to prevent reverse rotation. Pumps shall have an efficiency of not less than 70 percent.

IIA.3.1 Pumping conditions. Speed of pumps shall not exceed 1800 rpm. Bids shall be based on the pumps operating under the following conditions.

Well No.	Capacity (GPM)	Discharge Head (feet)	Motor HP	Electrical
1	260	44	10	240V3Ø
2	260	94	15	240V3Ø
3	260	106	15	240V3Ø
4	260	120	20	240V3Ø

	5	260	50	15	240V3Ø
	6	260	55	15	240V3Ø
	7	260	64	15	240V3Ø
	8	260	30	10	240V3Ø
(OMITTED)	~~9~~	~~200~~	~~160~~	~~20~~	~~240V3Ø~~
	10	200	130	15	240V3Ø

Discharge head shown is the head at the discharge flange of the pump. Total dynamic head on the pump shall also include the lift in the well, as determined by flow tests of the completed wells. Pumps shall be provided with sufficient column and line shaft to prevent breaking suction. In case the actual conditions differ substantially from those stated and shown, the provisions respecting an adjustment changed conditions shall apply, subject to the requirements of notification thereunder being given.

IIA.3.2 Pump heads shall be constructed from close-grained cast iron and shall be heavy duty type designed for hollow shaft drive. Pump shall have flanged above ground discharge.

IIA.3.3 Pump columns shall be standard weight zinc-coated seamless steel pipe conforming to WW-P-406 , and shall be in sections not to exceed 10 feet in length and of proper diameter to eliminate undue friction when pumping at pump capacity.

IIA.3.4 Line shafts shall be high grade ground and polished steel and not be less than 1-3/16 inches in diameter. The shaft shall be provided in interchangeable sections not over 10 feet in length and fastened with threaded steel couplings having a strength of not less than 100 percent of the strength of shaft after being assembled. The ends shall be machine finished and undercut for proper butting of the shaft. All threads shall be lathe cut.

IIA.3.5 Bearings. The pumping unit shall have sufficient guide bearings to maintain the alignment of the pump and shafting and to prevent vibration. The inner column couplings shall be bronze and shall act as bearings for the line shaft which shall be turned and polished. Oil lubricated bearings shall be provided with oil grooves to effect passage of oil down through the entire length of oil tube and shafting. An automatic lubricator with capacity sufficient for one week of continuous operation shall be provided to feed oil to the bearings. Lubricator shall have sight glass and feed adjustment.

IIA.3.6 Pump bowls shall be made of close grained cast iron, free from blow holes and all other defects which would impair their strength or durability for the service, and shall be lined with vitreous porcelain enamel. Bowls shall have smooth, curved vanes to

efficiently direct the flow of water and to prevent air locking. The bowls shall be of suitable thickness and strength to withstand the shut-off pressure of the unit. Bowls shall be fastened together in such a manner that accurate alignment is assured and maintained. Guide passages for water shall be so designed and finished as to reduce friction to a minimum.

IIA.3.7 Impellers shall be of the enclosed type, of heavy bronze construction. Each impeller shall be accurately fitted and perfectly balanced both dynamically and hydraulically. Impeller shaft shall be of nigh grade stainless steel, carefully ground and polished and furnished with lathe cut threads. No keyways shall be cut into the shaft. Impeller shall have non-overloading characteristics and shall have head characteristics as steep as possible so that an increase or decrease in the operating head above the design point will not cause an excessive decrease or increase in pump capacity. Impellers shall be attached and locked to pump shaft in such a manner that they may easily be removed, and that they will not work loose for any reason.

IIA.3.8 Suction pipe and strainer. A suction pipe of suitable diameter and 10 feet long shall be provided for each pump. A galvanized strainer having anet inlet opening area of at least five times the area of the suction pipe shall be provided at the lower end of the suction pipe.

IIA.3.9 Motors shall be a hollow shaft, vertical, full enclosed electrical motor and shall be squirrel cage induction type and shall have ample capacity to operate the pump properly through its entire head capacity range without exceeding its rated capacity, but shall be not less than the specified. The speed of the motor shall not exceed 1800 rpm. The motor shall conform to NEMA standards.

IIA.3.10 Right angle drive. Combination electric motor and right angle gear drives shall be provided for dual drive arrangement. The drive shall have one to one gear ration to transmit the power from the engine to the pump at normal operating speed and shall be of the vertical, nollow shaft, spiral bevel gear type equipped with anti-friction bearings and a base flange matching the pump head flange. It shall be conservatively rated to transmit the maximum power requirements of the pump and be equipped with a heavy duty ball thrust bearing capable of carrying the hydraulic thrust of the pump and the weight of the rotating element. An oil reservoir of ample capacity shall supply adequate lubrication to the gears and bearings. A suitable motor stand shall be furnished which provides ample room for a sliding clutch for alternating the prime mover. A sliding clutch shall be mounted on the head shaft so the gears do not operate when the pump is driven by the electric motor. A non reverse ratchet shall be incorporated in the clutch to prevent

backspin in the event of reverse rotation.

11A.3.11 Auxiliary gasoline engines shall be provided where indicated and shall be multi-cylinder, water cooled, heavy duty gasoline power plant with maximum horsepower at least 30 percent in excess of the maximum brake horsepower required to operate the pump continuously at its rated speed, over the entire head capacity range of the pump. RPM shall not exceed 1800, and piston speed shall not exceed 1200 FPM. The engine shall be arranged for electric motor cranking and shall be equipped with a high tension ignition system, battery and required appurtenances, shall include an adjustable governor, carburetor, tachometer, oil pressure gauge, cylinder temperature gage, gasoline pump and filter, gravity fuel tank, air cleaner , oil filter, generator, starting crank, radiator, exhaust pipe and muffler, and clutch take off assembly. Fuel tanks and fuel piping shall conform to section entitled "Gasoline Driven Engine Driven Electric Generators".

(a) Battery charger, electric type, shall be mounted on wall of pump house and shall be the rectifier type for operation with 120 volt 60 cycle current. Charger shall be protected by an automatic circuit breaker and shall have capacity to charge two 6 volt batteries or one 12 volt battery at eight to five amps. One direct current ammeter shall be included and shall be flush mounted on the front of the enclosure. All metal parts shall be corrosion resistant or shall be suitable protected against corrosion.

(b) Exhaust pipe shall be extra heavy steel pipe conforming to WW-P-406 and shall run through the wall of the pump room in an asbestos cement sleeve. A suitable muffler shall be provided by the engine manufacturer and shall be mounted in the exhaust pipe. The muffler shall be supported by the exhaust pipe.

(c) Metal instruction plate shall be mounted on the engine unit giving the manufacturer's recommendations for lubricating oil and other pertinent information.

(d) Safety guards. The interconnecting shafting between the gasoline engine and the combination drive and all other rotating units shall be provided with approved safety guards for protection of operating personnel.

(e) Gasoline tanks, fuel lines, exhaust ducts, and exhaust louvers shall be as specified in section entitled "Gasoline Engine Driven Electric Generators".

11A.4 Finish water and backwash pumps. Shall be vertical turbine type as specified for well pumps except that pumps shall be water.lubri-

cated type. Provide bell mouth suction in lieu of tailpiece and suction strainer. Provide combination right angle drive with auxiliary gasoline engine where indicated. Characteristics of pumps shall be as follows:

Pump No.	Capacity (gpm)	TDH (feet)	Max. RPM	Min. HP	Electrical
Service Pump No. 1	750	130	1800	40	480V,3Ø
2	750	130	1800	40	480V,3Ø
3	1500	165	1800	100	480V,3Ø
4	1500	165	1800	100	480V,3Ø
Backwash Pump	7500	50	1200	125	480V,3Ø

IIA.5 Surface wash pumps shall be of the horizontally split case type with suction and discharge connections in the lower half of the casing, allowing removal of the rotating element without disturbing the pipe connections. It shall be capable of delivering a design capacity of 200 gpm at a design head of 116 ft. TDH and NPSH available of 116 ft.; the BHP requirements of the pump at any point along the curve shall not exceed the rated motor horsepower.

IIA.5.1 Casing shall be of cast iron with a minimum tensile strength of 30,000 PSI, free from blow holes, sand pickets, and other detrimental defects. Water passageways shall be smooth to permit maximum efficiency. Casing shall be capable of withstanding a hydrostatic test pressure 150 percent of the maximum pumping pressure under which the pump could operate at the design speed.

IIA.5.2 Impeller shall be made of cast bronze. Impeller shall be accurately keyed to the shaft and fixed in an axial position. Impeller shall be held tightly to the shaft so that the impeller will not become loose should pump accidentally rotate in reverse direction.

IIA.5.3 Impeller wearing rings can be an integral part of the impeller with provisions for field replacement of bronze impeller wearing rings. Wearing rings shall fit with close tolerances so as to permit a minimum of recirculation. Positive locking of the case wearing rings shall be provided so that the case wearing rings will not rotate or change position in the case.

IIA.5.4 Stuffing boxes shall be equipped with general purpose mechanical shaft seals.

IIA.5.5 Shaft. The shaft for the mechanical shaft seal pumps shall be constructed of an 11 to 13 percent chrome stainless steel. Shaft shall be designed to withstand the torsional loads and other stresses to which it may be subjected. It shall be so designed that there will be no detrimental vibrational stresses. All of its surfaces shall be smoothly ground to accurate dimensions.

IIA.5.6 Bearings shall be of the anti-friction type pre-lubricated with grease and sealed for life. Bearing housings shall be dust tight and be provided with seals to prevent entrance of water from the pump side.

IIA.5.7 Miscellaneous fittings. Drain connections shall be provided at all low points in the pump casing, at the drip pockets underneath the stuffing boxes and all other points where drainage shall be possible. The casing shall be provided with air vents so that the pump can be freed from air pockets.

IIA.5.8 Bedplate. A cast iron drip rim bedplate of suitable size for mounting pump and driver shall be provided. Pump and driver shall be carefully aligned, then bolted in place at the factory prior to shipment.

IIA.5.9 Flexible coupling shall be provided. Coupling halves shall fit tightly to the shafts of the pump and the driver so as not to become loose during operation.

IIA.5.10 Motors shall be a horizontal drip proof electric motor of the squirrel cage induction type and shall have ample capacity to operate the pump properly thru its entire head capacity range without exceeding its rated capacity. The motor shall be 480V, 3 phase, 60 cycles, not more than 1800 rpm and shall conform to NEMA standards.

IIA.6 Magnetic motor starters shall be of the full voltage across the line type for 30 horsepower and smaller and shall be reduced voltage type for larger than 30 horsepower conforming to the latest NEMA standards. Reduced voltage starters shall be closed transition type limiting the starting inrush current to 150 percent of normal full load current. Starters shall be of the quick break type having a low voltage and thermal overload release and hand reset device. Starters shall have hand off automatic switch and shall be provided with the pumping equipment, but shall be wired in accordance with the division entitled "Electrical".

IIA.7 Pump characteristics curve. The Contractor shall furnish with each pump and drive prior to shipment, certified characteristics curves showing the capacity, head, efficiency, and brake horsepower throughout the entire range of the pump.

IIA.8 Performance Test. Each unit shall be tested by the Con-

tractor after being put into operation to determine conformance with this specification. Equipment failing to perform as specified shall be replaced by the Contractor at no additional cost to the Government.

11A.9 Warranty. All the equipment to be furnished under this section of the specification shall be guaranteed for a period of one year from the date of acceptance thereof, either for beneficial use o for final acceptance, whichever is earlier, against defective material, design, and workmanship.

11A.10 Drawings required of the Contractor. Before commencing any work, the contractor shall submit for approval shop drawings and layouts of each system included in this section of the specifications. Layouts shall be based on field established conditions; and interference between architectural, mechanical, electrical, and structural systems that cannot be resolved in the field shall be clearly defined. Shop drawings shall contain complete information in detail to show compliance with the specification. The following minimum information shall be furnished for each submitted item:

(a) Reference shall be made to the paragraph or subparagraph of the specification that specified the item.

(b) The intended use shall be specifically stated.

(c) Complete physical data shall be furnished.

(d) Complete certified performance data shall be furnished to show the actual capacity of the equipment as tested.

(e) Noncomplying features and reason for noncompliance shall be stated in detail.

(f) Partial submittals, or submittals of less than the whole of any system made up of interdependent components will not be considered.

11A.11 Quality control. Provisions of Section entitled "Contractor Quality Control" shall apply.

SECTION IIB WATER TREATMENT EQUIPMENT

IIB.1 Applicable publications. The following publications of the issues listed below, but referred to elsewhere by basic designation only, form a part of this specification to the extent indicated by the references thereto (where a number is suffixed to the specification number, it denotes the effective amendment to the specifications):

(a) Federal and Military Specifications.

AAA-S-118B Scale, beam indicating (portable platform, floor type)

MIL-C-17226C Chlorinator, water purification, gas solution type with accessories.

MIL-C-17596C Compressors, reciprocating or rotary power driven, air, base mounted 10HP to 300 HP.

(b) Non Government Specifications and Standards.

American Society for Testing and Materials (ASTM)

A-48-64 Gray iron castings

D2239-65 Polyethylene (PE) plastic

D2241-65 Poly (vinyl chloride)(PVC) plastic pipe (SDR-PR and Class T)

American Waterworks Association (AWWA)

C-504-66 Rubber seated butterfly valves

IIB.2 General requirements. The work includes the provision of water treatment equipment complete and ready for operation. The treatment process shall be of the cold lime softening type similar to that in use in the existing main plant and shall include gravity type filters, chlorination, and fluoridation.

IIB.3 Lime feeders shall be screw type volumetric dry feeders with intermittent drive clutch. Each unit shall have a capacity of 18.5 cubic feet per hour and shall consist of a built in hopper, diaphragm agitators, feed section with self cleaning screw which simultaneously rotates and reciprocates, and a dust tight enclosure. Units shall be equipped with a variable speed drive with pneumatic positioner to accept a pneumatic or electronic signal for proportional control. Units shall have a 1/4 horsepower, 208 volt, single phase totally enclosed motor, and shall be mounted on a 50 gallon polyvinylchloride plastic lined steel solution tank. Solution tank shall have 1/4 horsepower, 208 volt, single phase mechanical mixer, float valve, and piping con-

nections. Provide a slide type shutoff gate and flexible connection with rubberized fabric at the inlet to each feeder.

11B.4 Lime solution pumps shall be positive displacement plunger type suitable for pumping lime solution. Each pump shall have a capacity of 400 gallons per hour at a discharge pressure of 50 psig. Pumps shall be complete with totally enclosed horizontal electric motors, gear reducers, plunger pumps with provisions for adjustment in motion, and cast iron frame. Pump casing shall be cast iron with stainless steel plungers. Suction and discharge check valves shall have reversible seats. Pump components shall be self aligning.

11B.5 Softeners shall be cold lime water softening units utilizing catalytic precipitation. The units shall have a capacity of 700 gpm each. Units shall be constructed of structural steel shapes and plates and shall include support legs and braces for adequate support. Unit shall be complete with proper internal baffles, weirs, overflow, etc., to provide proper level control. Provide four sample taps with piping to 4 feet above grade with ball valves for sampling bed at various levels. Provide catalyst hopper with water piping to deliver catalyst to the top of the unit. Submit complete shop drawings of unit and all accessories. Provide complete catalyst charge for each unit. Analysis of the raw water is expected to be approximately as shown in the following table.

	Raw Water	Softener Effluent
Calcium	180	35
Magnesium	8	8
Sodium and potassium	25	25
Bicarbonate	182	2
Carbonate	0	35
Chloride	25	25
Total hardness	188	43
Alkalinity (M.O.)	182	37
Alkalinity (PH)	0	17
Carbon dioxide	13	0
Iron	0.6	0.1
pH	7.2	10.2

11B.6 Filters. Provide two gravity type, rapid sand filters. Each filter shall have a capacity of 1 million gallons per day at a filter rate of 2 gpm per square foot of filter area. Each filter shall be complete with all necessary equipment including underdrain system, sand and gravel filter media, wash troughs, cast iron wall and floor thimbles, access manholes, hydraulically operated valves, surface wash system, and operating tables.

IIB.6.1 Filter underdrainage systems. The underdrainage system in each filter shall include a false filter bottom, constructed of reinforced concrete, with piers supporting it at a height of 20 inches above the structural floor of the filter, forming a pressure chamber beneath the false bottom, to which the filter effluent and wash water piping shall make direct connection.

(a) Reinforced concrete filter structure shall be constructed on ledges provided in the walls for the support of the false bottom about its periphery. Contractor shall provide the reinforced concrete false bottom and the pier's supports complete, and shall provide all steel reinforcements required to anchor the piers and the false bottom to the structural floor and walls of the filter.

(b) Filter bottom built into the false floor of the filter shall include a series of depressions, of inverted pyramidal form, cast into the concrete at spacing of 12 inches from center to center, each connecting with the pressure chamber beneath the false floor by means of a porcelain thimble extending downward through the concrete below the apex. The pyramidal depressions shall be mathematically accurate in form, and accurately spaced and oriented. The surfaces of the depressions and the tops of the ridges shall be given a steel trowel finish in accordance with section entitled "Concrete".

(c) Porcelain thimbles shall be moulded with an integral collar or water stop midway their length, and accurately finished. There shall be furnished and placed, with accurate fit, in each pyramidal depression, five large spheres and nine smaller ones, in the following order:

(1) One large sphere in the bottom of the depression.

(2) Four large spheres above it, fitting accurately to the sides of the depression and among themselves.

(3) Eight small spheres, fitting into the interstices between the four large spheres and the sides and corners of the depression; and one medium sphere, fitting into the central space between the four large spheres. The large spheres shall be made of porcelain, and shall be sound, dense, of high specific gravity, perfect in form and dimension, and with smooth, hard surface. The smaller spheres shall be made of sound earthenware, with such tolerance of form and dimension as is permissible in securing a satisfactory fit.

(d) False Filter bottom and the supporting piers shall be made of concrete, mixed in the proportion of one part portland cement, 1-1/2 parts of sand and 3 parts of screened gravel of 3/4 inch maximum size. The false bottom and the supporting piers shall be reinforced and anchored to the filter structure with steel reinforcements.

(e) Forms for shaping the pyramidal depressions in the false filter bottom shall be constructed of magnesium, carefully machined to accurate dimension and true and smooth surface, with means for rigidly securing in position the porcelain thimble to be cast into the concrete below the apex of the depression. The forms shall be accurately spaced and well secured, to prevent displacement during the placing of concrete. The forms shall be thoroughly cleaned and greased before each use.

(f) After the concrete has partially set, the form of each depression shall be carefully realeased and slightly raised, and a small quantity of liquid grout poured between the form and the concrete. The form shall then be again pulled down to position, spreading the grout to insure perfectly smooth and dense surfaces in the depression. Each false filter bottom shall be cast monolithic. Only a single pour for each bottom will beallowed. As it is the purpose of the false bottom to secure strictly uniform diffusion of the wash water at the base of the filter bed, it is important that extreme accuracy shall be obtained in the form and dimensions of the pyramidal depressions, in the diameter and shape of the spheres, and in uniformity of the interstices among the spheres. In checking the finished bottoms for accuracy, a 1/16 inch gauge or feeler shall be used, and, if said gauge can be entered between any two of the five large spheres, the entire bottom will be rejected.

IIB.6.2 Wash troughs. Four waste wash water collecting troughs shall be provided within each of the filters. These troughs shall be of such width and depth as to easily carry off the waste water when the filters are being backwashed at a rate equivalent to a 30 inch vertical rise per minute. The shall be of the cross sectional form shown on the plans, and shall be provided with the top edges 24 inches above the sand line. The troughs shall be constructed of steel plate, welded construction, at least 3/16 inch thick, with stiffener angles along top edges. The top edges shall be machine planned perfectly true, so when they are erected in place within the filter, they shall be on the same horizontal plane to secure uniform weir action and even withdrawal of the waste water from all areas of the filter alike. Each trough shall be closed at the rear by welded steel plate, and the closed end shall accommodate substantial adjustable hangers, properly secured to the concrete walls of the filter. The wash troughs, after fabrication and machining, shall receive a black, corrosion resistant polyvinyl chloride coating applied by dipping, as follows: the troughs shall be thoroughly clenaed and primed and preheated to 235 degrees F. They shall be dipped into the coating material; the finished coating shall be not less than 0.050 inches nor more than 0.075 inches in thickness; after the proper thickness is obtained, the troughs shall be withdrawn from the vat in such manner that no unsightly runs or holidays shall be visible; the coating shall be allowed to drip and then over-cured at a temperature of 380 degrees F. for at least 80 minutes. The troughs shall then be

spark tested at 15,000 volts and, if the test shows no pin holes, the coating is satisfactory.

IIB.6.3 Filter sand and gravel. Silica sand and graded gravel shall be placed within each filter in accordance with the following:

(a) One inch diameter gravel, for leveling pyramidal depressions of filter bottoms.

(b) Three inch filter gravel, graded from one inch diameter to 5/8 inch diameter.

(c) Three inch filter gravel, graded from 5/8 inch diameter to 3/8 inch diameter.

(d) Three inch filter gravel, graded from 3/8 inch diameter to 3/16 inch diameter.

(e) Three inch filter gravel, graded from 3/16 inch diameter to a size which will be retained on a screen having 10 meshes per lineal inch, constructed of number 20 wire.

(f) Twenty seven inch silica filter sand.

Filter gravel shall consist of hard, durable, rounded particles, and shall be of such character as to remain 98 percent insoluble after a 24 hour bath in cold hydrochloric acid. The gravel shall be free from flat or elongated particles, and shall also be free from shells, clay, loam, dust, or other foreign matter. The silica sand shall be either sharp or rounded, and of such character as to remain 98 percent insoluble after a 24 hour bath in warm hydrochloric acid. It shall be free from clay, loam dust, or other foreign particles, and shall have an effective size of not less than .38 mm, nor more than 0.45 mm. The uniformity coefficient shall not exceed 1.65. The depth above specified for the sand bed is the finished depth, and sufficient material shall be initially placed within the filters to obtain the specified depth after washing and scraping.

IIB.6.4 Cast iron wall and floor thimbles shall be provided at all points where piping passes through the walls and floors of the structures. Thimbles shall be of heavy cast iron construction, of either bell or flanged pattern, as required, and each thimble shall be provided with an integrally cast collar or water stop.

IIB.6.5 Access Manholes shall be provided for each filter to provide entrance to the pressure chamber beneath the false filter bottom. These manholes shall be 18 inches by 24 inches oval, inside measurements and of such length as to extend from the outside filter wall to the pressure chamber. Manholes shall be of heavy cast iron and the frames

provided with an integrally cast collar or water stop. The manhole frames shall be fitted with flanged covers and the face of both the flange and cover shall be carefully machined. Suitable gaskets shall be provided between the frames and covers, and the covers shall be attached by means of heavy studs with brass nuts.

IIB.6.6 Hydraulically operated filter valves. Hydraulically operated gate valves shall be provided in the 6 inch rewash, 10 inch effluent and 18 inch wash connections of each of the filters. Valves shall be of cast iron construction, fully bronze mounted, They shall have flanged end connections, faced and drilled standard. All valves shall be suitable for a water working pressure of at least 50 percent in excess of the maximum possible pressure against the gates. Wash valves shall be of the square bottom or beamed waterway type. Cylinders shall be of cast iron construction, suitable lined with seamless valve bodies. Cylinders shall be of sufficient diameter to readily open and close the gates with the prevailing pressure against the discs and an available pressure for operation of the cylinders of 50 lbs. per square inch. Cylinders shall have removable caps and accessible stuffing boxes at both ends. Pistons shall be of cast iron, fitted with double cup leathers. Valves shall operate freely without binding, and shall stop and hold at any desired opening. The cylinders shall be drilled and tapped at top and bottom for connections to the pressure and drain piping, and the piping to the indicating and controlling devices on the operating tables. Cylinders shall have brass tail rods at least 3/4 inch in diameter with brass eyebolts at end, capable of sustaining the weight of the gate.

IIB.6.7 Hydraulically operated waste valves. Valves on the 20 inch filter waste connections shall be of angular pattern, with a standard 20 inch outlet flange and a rectangular inlet flange. The rectangular inlet shall have an area of at least 125 percent of a 20 inch pipe, to insure rapid removal of the wash water waste. The valves shall be of heavy cast iron, fully bronze mounted, with bronze seats and composition seat rings. Valve stems shall be of bronze, not less than 2 inch diameter. Each valve shall be fitted with a suitable rectangular cast iron thimble, for extension through the filter wall, these thimbles to have integrally cast waste stops. Valves shall be hydraulically operated, equipped with cylinders as above specified.

IIB.6.8 Hydraulically operated sluice gates shall be provided in the filter influent connections. Sluice gates shall be of rectangular pattern, with openings 12 inches wide by 18 inches high. They shall be of heavy cast iron construction, fully bronze fitted. They shall be of flat frame pattern for bolting to the wall castings. Sluice gates shall be of the self-contained type, with adjustable side wedges, and designed for seating and unseating pressures. Cylinders shall be of cast iron construction, lined with seamless brass tubing, and of

sufficient diameter to readily open and close the gates under the prevailing head, and with an available pressure for operation of 50 lbs. per square inch.

IIB.6.9 Diaphragm valves for surface wash. The valves in the surface wash connections shall be 3 inch diaphragm valves, each valve to be complete with a manual control switch for mounting on the filter operating console, with necessary small tubing to connect in place. Valves shall have cast iron bodies, bronze fitted.

IIB.6.10 Surface wash systems. Each of the filter units shall be provided with one filter bed agitator. Each agitator unit shall consist of a pair of self-rotating horizontal red brass pipe arms supported directly above the surface of the filter bed by a bearing made of bronze and provided with a self-tightening stuffing box. A single row of molded nylon nozzles spaced on reducing centers, on the opposite side of each arm shall discharge the water at a high velocity, downwardly and backwardly. The reaction of these jets, which are directed at an angle to the surface of the filter bed, shall cause the two arms to rotate and, during the rotation, the nozzles on the arms are thus moved through concentric circles. At the end of each arm, there shall be a nozzle pointing radially outward and downward in such a manner as to cleanse the sand adjacent to the filter walls and reach the sand in the corners of the filter.

IIB.6.11 Filter operating tables shall be provided for each filter, designed for accommodating the controlling and indicating devices for the five hydraulic filter valves. Tables shall be of the pneumatic type with operating controls and gauges. Each console shall be constructed of molded glass reinforced polyester laminate, having a minimum wall thickness of 1/8 inch. The ends and center section shall be chemically bonded and mechanically fastened to provide a unit structure. The laminate exterior shall be covered with an integrally molded gel coat 15 mils. thick to provide a smooth surface. This surface shall be coated with an epoxy primer and chemical-resistant, solvent-resistent epoxy enamel. The cabinet laminate shall be constructed by the use of: 10 oz. fiberglass cloth, fiberglass mat, and 24 oz. woven roving and shall contain a minimum of 35 percent by weight of fiberglass reinforcement. All corners, excepting for the base, shall be rounded and the cabinet provided with a flanged base for direct bolting to the operating floor. Rear of cabinet and front of cabinet shall be fitted with removable panels. The operating tables shall have the necessary controllers for hydro-pneumatic control of 5 filter valves, and shall include the following:

(a) Wash water rate of flow rate set station.

(b) Filter effluent rate of flow controller rate set station.

(c) Wash water pump push button station.

(d) Surface wash pump push botton station.

(e) A filter surface wash control station

(f) Indicating only filter rate of flow gauge.

(g) Indicating only filter loss of head gauge.

11B.7 Chlorination system shallinclude three proportioning type chlorinators, scales, chlorine gas and solution piping, distribution panel, booster pump, and three points of application.

11B.7.1 Chlorinators shall be of automatic proportioning solution feed type conforming to MIL-C-17226. Capacity of each chlorinator shall be 400 pounds per day of chlorine gas. The chlorinator shall be floor mounted with operating components protected within a fiberglass cabinet. Chlorinator shall receive a proportioning pneumatic or electrical signal. The proportioning signal shall activate the automatic proportioning valve housed within the chlorinator cabinet, and control chlorine gas feed rate in proportion to flow. The chlorinator shall provide a manual control knob for chlorine dosage on the face of the cabinet. Chlorinator shall be entirely constructed of materials resistant to the corrosive attack of chlorine gas and shall include the following control and safety components housed within the unit. Positive acting chlorine gas shut off valve, vacuum regulator, pressure relief valve, vacuum breaker, an isolating valve, silver rate valve for manual control of chlorine gas feed rate, and differential pressure regulator to assure reproducible accuracy.

11B.7.2 Accessories shall be provided as required for a complete system. All accessories shall be provided by the chlorinator manufacturer and shall be suitable for use with the chlorinator and for the service intended. Accessories shall include the following:

(a) Solution piping shall conform to section entitled "Plant Piping and Accessories".

(b) Valves shall be plastic diaphragm type.

(c) Solution distributor panels shall be proportioning type consisting of a plastic manifold, manual solution valves, and rotameters mounted on a heavy sheet steel panel for wall mounting.

(d) Strainers shall be Y-type with plastic construction.

11B.7.3 Booster pump shall be end suction centrifugal type, 10 gpm at 100 feet total dynamic head, 3/4 horsepower, 208 volts, single phase.

IIB.7.4 Scales shall be dial type, skeleton frame with a capacity of 1700 pounds, 26 inch by 28 inch platform, capable of holding five 150 pound chlorine cylinders. Scales shall conform to applicable portions of AAA-S-118,except that scales shall be dial rather than beam type.

II.B.8 Fluoridation system shall include a volumetric dry chemical feeder with loading hopper, dust collector, 35 gallon solution tank and solution pump. Feeder shall have a capacity of 11 cubic feet per hour and shall be as specified hereinbefore for lime feeders, including proportional control from a pneumatic or electronic signal. Unit shall include a flexible connection, slide gate, extension hopper, loading hopper, and a dust collector, which shall be located on the second floor. Dust collector shall have a 1/2 horsepower blower and duct through roof with cap. Electrical characteristics of all motors to be 208 volts, 1 phase, 60 cycle.

II.B.9 Meters and controllers. The plant shall be provided with a finish water meter, raw water meter, and flow rate controls on the influent to each softener, effluent from each filter on the backwash main, and at each well.

IIB.9.1 Raw and finish water meters. Provide in the 24 inch diameter piping 24 inch diameter flow tubes of the concentric type, constructed of cast iron. The flow tube shall have 125 psig flanged ends. The laying length of the tube shall be 47-1/4 inch. There shall be a single corner tap at the main diameter with a hole leading from the interior of the tube. This hole is at right angles to and flush with the inside diameter of the tube and free from burrs. There shall also be a pressure ring at the throat section of the flow tube, the inner wall of which will consist of the bronze throat liner. This liner shall contain 4 holes leading from the inside diameter of the throat section to the pressure ring, these holes being at right angles to the throat and free from burrs. Each flow tube shall pass a maximum of 6.2 million gallons per day at 64.47 inches of water differential. Inaccuracy of flow measurement shall not exceed 1/2 percent at any point within a range of flow of maximum to 10 percent of maximum. Provide a transmitter consisting of a mercury float operated differential converter which shall utilize a hard rubber shaped float and have attached to it as an integral part, a pneumatic or electronic motion transmitter. The differential converter group shall be constructed of good grade cast iron and shall be furnished complete with manifold pressure piping and corrosion resistant shut-off valves. The square root extraction shall be accomplished at the transmitter by means of the shaped float and square root extraction by supplementary pneumatic relays will not be acceptable. The assembly shall include a uniformly spaced,direct reading, dial type indicator for meter checking and setting purposes. The differential converter group shall position the motion transmitter which shall in turn produce a linear air signal or electronic signal in direct proportion to

the rate of flow. The motion transmitter shall have built into it, a booster pilot valve to insure fast action of the transmitter air signal. Air consumption shall not exceed 0.0 SCFM. The rate of flow transmitter shall be provided for wall bracket mounting and shall include an air set unti consisting of a pressure regulator, gauge and filter for installation in the air supply line. The transmitter shall supply a signal to the devices as specified. For use in conjunction with the transmitter there shall be furnished a receiver of the indicating recording and totalizing type, The receiver element shall be a large diameter which shall take the signal from the transmitter and relay it, by means of mechanical linkage, to the indicating, recording and totalizing receiving elements. The receiving elements shall be housed in the main control panel as shown and specified herein, with glass covered openings for dial, chart and integrator (totalizer). Chart and totalizer shall be driven by 115 volt, 60 cycle motors. The receiver shall indicate the flow on a uniformly graduated, direct reading, flow scale entirely separated from the recording mechanism. The indicator shall be not less than 9 inches in length, and operating over a standard 0 to 100 percent scale. The rate of flow shall be recoreded on a 12 inch diameter evenly spaced, circular, concentrically graduated chart designed for weekly removal. Chart hub shall be of the non-removable type. It shall integrate the flow on the continuous direct reading, seven digit totalizer. The metering equipment shall be capable of measuring the rate of flow from a maximum of 6 million gallons per day down to a minimum of 0.6 million gallons per day with an average error not exceeding plus or minus 2 percent at any point over the entire range as registered by the totalizer mechanism. One year's supply of charts and ink shall be furnished to the Officer in Charge.

11B.9.2 Softener rate of flow control. The Contractor shall provide a size 8 inch rate controller on the inlet line to each of the softeners. The controllers shall have a capacity of 1.31 million gallons per day. Each rate of flow controller shall be paced by a pneumatic or electronic signal from the raw water rate of flow transmitter. There shall also be provided a rate set station to enable the operator to set the maximum rate on each of the rate of flow controllers. The rate of flow controllers shall be indirect acting automatic rate of flow controller which shall be controlled by a throttling valve (butterfly control valve) which shall also act as a tight shutoff valve. The controllers shall consist essentially of venturi tube, a hydraulically operated butterfly control valve a recovery increaser, and a valve position actuator which shall be capable of direct and indirect and indirect rate control. The butterfly control valve shall be mounted in the downstream recovery cone of the venturi tube, and the recovery increaser mounted immediately adjacent to the valve. The controller shall be designed for horizontal mounting. The venturi section shall be of the concentric type constructed of cast iron meeting ASTM A-48, with flanged end connections drilled and faced 125 pound standard. There shall be multiple pressure taps at the main diameter which shall be bronze bushed with ends of the bushings at right

angles to, and flush with, the inside diameter of the tube. There shall be a complete annular belt at the throat section of the venturi tube consisting of a bronze throat liner. The throat liner shall form an annulus chamber completely around the circumference of the tube throat and shall contain a sufficient number of holes to fully equalize the throat pressure in the annulus chamber. The rate control valve position actuator shall operate on the principle of a balance of moments about a fulcrum point to position a four-way hydraulic valve, which directs a water pressure to the opening or closing side of the butterfy control valve hydraulic cylinder operator, while the opposite side of the cylinder is connected to the drain port of the four way hydraulic valve. The moments acting about the fulcrum points to position the four way hydraulic valve are representative of actual flow rate through the controller and the set rate. The actual rate moment is created by a differential pot diaphragm connected to the high and low pressure taps of the venturi tube, and the set rate moment is created by an air loading pot (indirect acting) for remote rate set. The butterfly control valve shall conform to AWWA C-504 and shall include the hydraulic cylinder operator. The outlet falange diameter shall be the same as the diameter as the standard butterfly control valve. The butterfly control valve shall be sized to control the flow with an annular disc rotation of approximately seventy degrees angular disc rotation at maximum design flow with a 2 psi drop across the valve. The recovery increaser shall be flanged, drilled and faced 125 pound standard, cast iron or fabricated steel, with valve size inlet and line size outlet. The principal function of the rate of flow controllers is to divide the total flow thru the raw water meter equally between the two softeners. The accuracy of the controller shall be such that the indicated flow from a controller shall be within three percent of the actual flow. The repeatability of the raw water control loop shall be such that when given flow signal is changed the re-set from either the main control console or the raw water transmitter, the actual rate of flow, as measured using the softener basin rise, shall not deivate plus or minus one percent from the previous flow at the same setting. The stability of the raw water control loop shall be such that when a six foot long extension arm is rigidly attached to the butterfly control valve shaft, the deviation from normal of the free extension arm end shall not exceed plus or minus 0.1 inches over the specified flow range. The venturi tube, butterfly control valve and recovery increaser shall receive at least two coats of the epoxy lining. After manufacture, the venturi tubes shall be assigned serial numbers by the manufacturer, match with the butterfly control valves, and subjected to hydraulic tests over the flow and differential ranges, specified herein. These tests may be conducted either in an approved hydraulics testing laboratory or in the plant. If such tests are conducted in the plant, only approved testing personnel and procedures shall be used, and in the event that certain rate controllers do not meet the specified requirements, the equipment manufacturer shall furnish all labor, materials, tools, equipment, and all else required to remove the rate controller from the piping and make required modifications and/or changes.

This work shall be completed and accepted within the contract period. The flow versus differential curves for any single controller shall not deviate more than plus or minus 2 percent from the average for all controllers. The controllers shall be shipped from point to point as units in wood crates. All costs for testing, piping modifications, etc., shall be borne by the contractor with no extra compensation due from the Government.

11B.9.3 Filter effluent controls. Effluent line from each filter shall have installed an approved 10 inch rate of flow controller as described herein and a capacity of 2.04 million gallons per day. These controllers shall conform with the specifications for rate of flow controllers as mentioned in the specifications for the softeners. Each of the filter controllers shall be equipped with a remote rate set station, to be mounted on the operating table of each filter, to enable the operators to set the maximum rate of flow on each filter, and shall also have provided a level control tansmitter to pace each controller from the water level in the filter inlet flume. This control shall shut off each of the filter rate controllers if the water level in the inlet flume drops below a predetermined level. To work in conjunction with each filter rate of flow controller there shall be furnished a pneumatic rate of flow and loss of head transmitter. The transmitter shall conform with the specifications as called for under the raw water rate of flow transmitter, as mentioned in these specifications. There shall also be furnished indicating only rate of low and loss of head gauges mounted on each of the operating tables.

11B.9.4 Wash water rate of flow controller. For installation in the filter wash water piping the Contractor shall provide a rate controller with a capacity of 11.195 million gallons per day. The controller shall conform with the specifications as called for at the softeners and filter rate of flow controllers, as mentioned in these specifications. There shall be provided a wash water rate of flor rate set station mounted on each of the operating table. To work in conjunction with the wash water controller, there shall be provided a pneumatic or electronic transmitter. The transmitter shall conform with the specifications for the raw water rate of flow transmitter. The Contractor shall provide a 24 inch indicating only double facing wash water rate dial.

11B.9.5 Well rate of flow controllers shall be provided at the discharge of each well pump. The controllers shall maintain a constant pump discharge pressure regardless of the fluctuation of pressure in the raw water lines. The controllers shall be hydraulically operated, pilot controlled, diaphram type glove valve. The pump discharge pressure shall be adjustable by varying the spring loading on the control. The controllers shall be iron body bronze mounted, Class 125.

11B.10 Air compressor shall be air colled reciprocating type with duplex compressors, ASME Tank, and refrigerated after cooler. Unit

shall comply with applicable portions of MIL-C-17596. Each compressor shall be 10 horsepower and capable of delivering 33 SCFM at 100 psig pressure. Compressors shall be belt driven by 480 volt, 3 phase, horizontal dripproof squirrel cage induction motors. Tank shall be 200 psi ASME construction, 120 gallons capacity. Tank shall have ASME relief valve, automatic drain valve, and pressure switch control compressor operation. Compressors shall start unloaded. Refrigerated after-cooler and air drier shall be a hermetically sealed refrigerant compressor unit charged with a safe non-toxic refrigerant, an automatic drain valve moisture trap and complete insulation of tubing and fittings. Unit shall have a capacity to reduce the dew point of 33 SCFM of air to 15 degrees Fahrenheit.

11B.11 Drawings required of the Contractor. Before commencing any work, the Contractor shall submit for approval shop drawings and layouts of each system included in this section of the specifications. Layouts shall be based on field established conditions, and interference between architectural, mechanical, electrical, and structural systems that cannot be resolved in the field shall be clearly defined. Shop drawings shall contain complete information in detail to show compliance with the specifications. The following minimum information shall be furnished for each submitted item:

(a) Reference shall be made to the paragraph or subparagraph of the specifications that specified the item.

(b) The intended use shall be specifically stated.

(c) Complete physical data shall be furnished.

(d) Complete certified performance data shall be furnished to show the actual capacity of the equipment as tested.

(e) Noncomplying features and reason for noncompliance shall be stated in detail.

(f) Partial submittals, or submittals of less than the whole of any system made up of interdependent components will not be considered.

11B.12 Quality control. Provisions of Section entitled "Contractor Quality Control" shall apply.

---oOo---

SECTION IIC CONTROLS

IIC.1 Applicable publications. The following publications of the issues listed below, but referred to elsewhere by basic designation only, for a part of this specification to the extent indicated by the references thereto (where a number is suffixed to the specification number, it denotes the effective amendment to the specification:

(a) Non Government Specifications and Standards.

Insulated Power cable Engineers Association (IPCEA)
Interim Standard No. 2 to Publication No. S-61-402
National Electrical Manufacturers Association (NEMA)

IIC.2 General Requirements: A complete and automatic control system shall be provided to control the operation of the well field, treatment plant, finish water pumps, and distribution system. The system shall be operated from a control panel located in the main office of the plant. The system shall be the product of a manufacturer who has had at least 5 years experience in furnishing similar telemetering and control systems. The Contractor shall submit complete hydraulic, pneumatic, and electrical drawings (schematic), and, functional descriptions for approval prior toinstallation. All controls, equipment, and installation shall be guaranteed for a period of one year from date of acceptance.

IIC.3 Function of system:

IIC.3.1 Well field. A float control shall be provided in the pump house on the reservoir which shall operate thru the control panel in the treatment plant office and start well pumps in four steps as the water level in the reservoir falls and stop well pumps in four steps as the water level rises. In addition to the four steps of pump control there shall be a high water alarm and a low water alarm and a low level step which will shut down the service pumps if the level in the reservoir falls below a safe operating level. The float control shall be a cast aluminum NEMA 1 float switch for wall mounting complete with 6-1/2 inch ceramic float, float and conterweight sheaves, 6 inch indicator with black numerals on a white background, 30 feet of stainless steel tape, and nine circuits. The voltage shall be 110 volts and total float travel shall be 9 feet. The circuit from the float switch shall be run to the main control panel in the treatment plant office. A selector board shall be provided in the control panel face which shall consist of multiple vertically stacked planes of contact strips running perpendicular to each other, with shorting pins for insertion in neatly drilled holes to provide contact at the desired points. The selector board shall have 20 rows across for wells and six rows up and down includingon, off, and four capacity steps corresponding to the four steps of pump control in the float switch. Provide 48 shorting pins.

The face of the selector board shall be finished black bakelite with well numbers engraved across the top and off-on-step numbers down the left side. Provide a telemetering transceiver in the panel for each of the eight initial wells, leaving space for 12 additional transceivers for the future wells. Each transceiver shall transmit an operating signal over a direct burial line to the well to another transceiver in the well house which shall start and stop the well pump. A pump required light for each well in the main panel shall light when the control system is calling for the well to run and a return signal from the well on the same pair of transmission lines shall light a pump running light if the pump started, or a pump failure light if the pump did not start.

(b) Distribution system. Provide a pressure tap in the main water line at the base of the existing Paradise Point elevated tank with 1/2 inch type K copper tubing to a pressure control in the existing well house at the tank. The pressure control shall consist of a pressure sensor assembly with adjustable motor driven time delay relays adjustable from 5 to 90 seconds. Pressure sensor assembly shall have to completely independent bellows (or diaphrams) per step manifolded to the pressure line and shall operate dust proof mercury switches. Pressure element shall be adjustable in the field without special tools over the entire range of control. Error shall not exceed 1/2 percent of the maximum operating range. Enclosure shall be NEMA 1, welded, phosphatized, primed and finished with baked enamel. The pressure sensor assembly shall provide 4 steps of pump capacity. A telemetering transmitter shall be mounted within the same enclosure which shall be capable of transmitting six sequential signals over one pair of transmission lines to a telemeter receiver located in the panel in the pumping station at the reservoir. The receiver shall in turn start and stop the service pumps in four steps in the sequence required. The other two sequential signals shall activate a tank low level and high level warning lights in the main control panel in the treatment plant office. In addition, pump running lights shall be provided in the main control panel for each of the service pumps.

IIC.3.3 Treatment Plant. The operation of treatment plant equipment shall be paced by pneumatic or electronic signals from the raw water and finished water meters specified in section "Water Treatment Equipment". The signal shall be directly proportional to the flow of water thru the meter.

(a) The raw water meter signal shall control the following items:

(1) Lime feed rate
(2) Softener rate controllers
(3) Chlorine feed rate (Pre chlorination)
(4) Chlorine feed rate (effluent chlorination)
(5) Fluoride feed rate

(b) In addition, when the rate of flow of raw water thru the meter falls below the plant minimum capacity, a pressure electric switch or switches shall perform the following functions:

(1) Stop lime feeders
(2) Stop lime solution pumps
(3) Close chlorinator water solenoid valve
(4) Stop fluoride feeder
(5) Stop fluoride solution pump

(c) When the flow thru the raw water meter is restored, the above items shall be automatically restored.

(d) The finish water meter signal shall control the chlorine feed rate (finish water chlorination)

(e) When the rate of flow thru the finish water meter falls to zero, a pressure electric switch shall stop the chlorine solution booster pump. When the flow thru the meter is restored, the pump shall re-start.

IIC.3.4 Wells on existing plant. New well 10 shall supply water to the existing Hadnot Point water treatment plant and shall be connected into the control system for the existing well field serving that plant. The existing control system is an International Business Machine Corporation frequency actuated carrier current system. New wells 9 and 10 shall be provided with electronic dual-coded receivers, catalog No. 4073 as manufactured by the Simplex Time Recorder Company to operate with the existing International Business Machine Corporation Well pump control system.

IIC.4 Air piping shall be seamless type L copper tubing and shall be run concealed in finished areas. Where exposed, the air piping shall be racked. All air piping shall be installed in a neat and workmanlike manner throughout, and shall be free of leaks. Piping and conduit shall be run parallel to the building lines. Copper air tubing shall not touch any structural framing or metals, except when the tubing is wrapped with a material adequate to break the bond and protect the tubing from damage. Maximum spacing between tubing supports shall be 6 feet. Each control air piping system shall be tested pneumatically at 1-1/2 times the working pressure for 24 hours without a pressure drop greater than one psi. All leaks shall be corrected by remaking the joints; calking of joints will not be permitted. Provide a shut off gate valve and union at the point of connection of air lines to each piece of equipment.

IIC.5 Main control panel in the treatment plant office shall be of the general design as shown. The panel shall be a console constructed of fabricated steel finished in baked enamel. All instrument and control components including an audible alarm system with manual silencer shall be factory mounted and wired to terminal strips prior to shipment. Access doors shall be provided in the front of the panel with flush handles. All switches, charts, lights, etc. in the face of the panel shall be identified by engraved bakelite labels. Items to be displayed on the face of the panel shall be as follows:

(a) Raw water meter recorder-indicator-totalizer
(b) Finish water meter recorder - indicator-totalizer
(c) System pressure gage
(d) Well field selector board
(e) Pump required - pump running - pump failure lights
(f) For eight wells with space for ten additional wells.
(g) Pump running lights for four service pumps with space for two additional pumps.
(h) Pump running light for backwash pump
(i) Pump running light for surface wash pump
(j) Running lights and hand-off-automatic switches for each of the following:

Lime Feeder No. 1
Lime Feeder No. 2
Lime solution pump No. 1
Lime solution pump No. 2
Lime solution pump No. 3
Chlorine solution booster pump
Fluoride feeder
Fluoride solution pump

(k) Alarm lights for each of the following:

Reservoir low level
Reservoir high level
Elevated tank low level
Elevated tank high level
Note: When any one of the above alarm lights are on, the audible alarm shall sound.

IIC.6 Electrical. All electrical wiring, devices, raceways, and equipment shall conform to section "Interior Electrical". Telemetering wiring shall be direct burial cable conforming to IPCEA-NEMA Interim Standard #2 to IPCEA Publication No. S-61-402. The wire shall be 600V size 19 strand, 22 gauge AWG Copper, 2, 4, 6 and 8 conductors as required, buried direct with waterline piping. Control wiring in the building shall be run in conduit and shall be run concealed in finished areas. Control wiring shall be 600 volt rated.

IIC.7 Service and Guarantee.

(a) Control manufacturer, after completion of the installation shall check and adjust all equipment specified under this section of the specifications and shall place them in complete operating condition subject to the approval of the Officer in Charge. A complete operating test shall be performed, and each control device shall be verified for proper operation.

(b) Instructions. The Contractor shall furnish the services of a qualified engineer regularly employed by the control manufacturer to instruct the Government personnel in the operation and maintenance of the control system and related equipment for five 8-hour working days after the systems are complete.

(c) Control systems shall be free from defects in workmanship and material under normal use and service. If within twelve months from the date of acceptance by the Officer in Charge any of the automatic control equipment is proved to be defective in workmanship or material, it shall be adjusted, repaired or replaced by the Contractor at his own expense.

IIC.8 Drawings required of the Contractor. Before commencing any work, the Contractor shall submit for approval shop drawings and layouts of each system included in this section of the specifications. Layouts shall be based on field established conditions; and interference between architectural, mechanical, electrical, and structural systems that cannot be resolved in the field shall be clearly defined. Shop drawings shall contain complete information in detail to show compliance with the specification. The following minimum information shall be furnished for each submitted item:

(a) Reference shall be made to the paragraph or subparagraph of the specification that specified the item.

(b) The intended use shall be specifically stated.

(c) Complete physical data shall be furnished.

(d) Complete certified performance data shall be furnished to show the actual capacity of the equipment as tested.

(e) Noncomplying features and reason for noncompliance shall stated in detail.

(f) Partial submittals, or submittals of less than the whole of any system made up of interdependent components will not be considered.

DIVISION 12.

NOT USED.

DIVISION 13 SPECIAL CONSTRUCTION

SECTION 13A. PREFABRICATED METAL BUILDINGS

13A.1 Applicable publications. The following publications of the issues listed below, but referred to elsewhere by basic designation only, form a part of this specification to the extent indicated by the references thereto (where a number is suffixed to the specification number, it denotes the effective amendment to the specification):

(a) Bureau of Yards and Docks Specifications.

32Ye Metal doors.

(b) Federal and Military Specifications.

DD-G-451c	Glass, plate, sheet, figured (corrugated and float, for glazing, mirrors, and other uses).
FF-H-106a(1)(9)	Hardware, builder's; locks and door trim.
FF-H-001111b	Hardware, builders'; shelf and miscellaneous.
FF-H-116c(1)	Hinges, hardware, builders'.
QQ-S-775d	Steel sheets, carbon, zinc-coated.
TT-P-645	Primer, paint, zinc-chromate, alkyd type.
TT-P-781a(1)	Putty and elastic-compound, for metal-sash glazing.
MIL-S-4174A	Steel sheet and strip, flat, aluminum coated, low carbon.
MIL-P-6883A	Paint, blended-type, coal-tar pitch base, bituminous.
MIL-P-15328B	Primer, pretreatment (formula No. 117 for metals).
MIL-C-18969B	Calking compounds, metal seam and wood seam.

(c) Non-Government Specifications and Standards.

Architectural Aluminum Manufacturers Association (AAMA)

Aluminum window specification - 1969.

American Institute of Steel Construction (AISC)

Design, fabrication, and erection of structural steel for buildings (sixth edition).

American Iron and Steel Institute (AISI)

Light gage cold-formed steel design manual - 1962.

American Welding Society (AWS)

Standard code for arc and gas welding in building construction.

Metal Building Manufacturers Association (MBMA)

Recommended design practices manual - 1963.

Steel Window Institute (SWI)

Recommended standards for steel windows - 1962.

13A.2 General requirements. Prefabricated metal buildings shall be the product of a manufacturer who is regularly engaged in the manufacturer of prefabricated metal buildings. The buildings shall have clear spans . The buildings shall be one of the following types:

Type I	Truss (or beam) type
Type II	Rigid frame type
Type III	Self-framing type

13A.2.1 Assembly and disassembly. The size of the prefabricated components and the necessary field connections required for erection shall be such as will permit easy assembly and disassembly by means of the building manufacturer's standard fasteners and construction tools. The maximum size of any shop-assembled component of the building(s) shall be such as will permit transportation from factory to site by commercial carrier. Components of the metal building(s) shall be fabricated in such manner that once assembled, they may be disassembled, packaged, and reassembled with a minimum amount of labor and maximum salvageability. Each and every piece and part of the assembly shall be clearly and legibly marked to correspond with previously prepared erection drawings, diagrams, and/or instruction manuals.

13A.2.2 Storage and protection. Prefabricated components, sheets, panels, and other manufactured items shall be delivered, stored, handled, and erected in such a manner that they will not be damaged or deformed. Materials stored on the site before erection shall be stacked on platforms or pallets and covered with tarpaulins or other suitable weathertight covering. All metal sheets or panels shall be stored so that water which might have accumlated during transit or storage will drain off; the sheets or panels shall not be stored in contact with materials that might cause staining. Upon arrival on the job site; the sheets or panels shall be inspected; if found wet, the moisture shall be removed and the sheets or panels shall be re-stacked and protected until used.

13A.2.3 Design requirements. Unless specified otherwise herein, the design of all prefabricated metal buildings shall be in accordance with the Metal Building Manufacturers Association's "Recommended Design

Practices Manual". If required, the Contractor shall submit for approval the engineering design calculations and stress diagrams of all structural or load-bearing components.

(a) Normal design loads. The vertical live loads, in addition to the applicable dead loads, shall be applied on the horizontal projection of the roof structure. The wind load on the building(s) shall be proportioned and applied as horizontal and uplift velocity pressures. The Maximum deflection in roofing or roof panels shall not exceed 1/180th of the span, and the maximum deflection in siding or wall panels shall not exceed 1/90th of the span.

(b) Auxiliary loads. Superimposed dynamic and/or static loads shall be applied in addition to the normal design loads and shall be considered in combinations with normal design loads.

13A.3 Materials and components.

13A.3.1 Steel framework shall be in accordance with the Steel Construction Manual of the American Institute of Steel Construction. Steel framing less than 3/16inch thick shall be in accordance with the American Iron and Steel Institute's Light Gage Steel Design Specification. Prefabricated sections of the framework shall be designed to assure easy packing, shipping, erection, dismantling, repacking, and re-erection, and shall be assembled in a manner which will assure the maximum strength and rigidity. Approved structural members, or structural assemblies, having cross-sectional areas and/or connections that differ from the section and connections indicated may be used, if the proposed framework adequately meets design requirements.

13A.3.2 Siding and roofing (sheets or panels) shall be either steel or aluminum conforming to the following requirements. As far as practical, one type of siding and one type of roofing shall be used throughout the project.

(a) Steel sheets or panels shall be either zinc-coated or aluminum-coated. Zinc-coating for steel shall conform to the requirements of specification QQ-S-775, class d. Aluminum-coated steel shall conform to the applicable requirements of specification MIL-S-4174, type II, The siding or panels shall be either (1) the standard corrugated type, (2) the deep corrugated type, or (3) the panel type. The standard corrugated type shall have corrugations not less than 1/2-inch deep spaced not to exceed 2-1/2 inches on centers. The deep corrugated type shall have corrugations, V-beams, ribs, channels, or other similar configurations not less than 1-inch deep spaced not to exceed 12 inches on centers or not less than 3/4-inch deep spaced not to exceed 6 inches

on centers. The panel type shall have either (1) interlocking ribs not less than 3-inches deep spaced not greater than 16inches apart, or (2) configurations not less than 1-1/2 inches deep spaced not greater than 12 inches apart.

(b) Aluminum sheets or panels shall be manufactured from alloy 3003 alclad or 3004 alclad and shall be tempered as required to suit the respective forming operations. The minimum thickness shall be 0.032 inch (20 B&S gage). The sheets or panels shall be either (1) the standard corrugated type, (2) the deep corrugated type, or (3) the panel type. The standard corrugated type shall have corrugations not less than 7/8-inch deep spaced not to exceed 2-1/2 inches on centers. The deep corrugated type shall have corrugations, ribs, V-beams, channels, or other similar configuration not less than one inch deep spaced not to exceed 12 inches on centers or not less than 3/4-inch deep spaced not to exceed 6 inches on centers. The panel type shall have either (1) interlocking ribs not less than 3 inches deep, spaced not greater than 16 inches apart, or (2) configurations not less than 1-1/2 inches deep, spaced not greater than 12 inches apart.

13A.3.3 Fasteners for securing sheets and panels. Fasteners for attachment to structural supports and fasteners for attachment to adjoining sheets or panels shall be as approved, and in accordance with the manufacturer's recommendation. Unless specified otherwise, herein, the fasteners shall be either self-tapping screws, bolts and nuts, self-locking rivets, self-locking bolts, end-welded studs, bolted or riveted studs, or step rivets held by aluminum straps. Other types of fasteners of the building manufacturer's standard type may be used if prior approval is obtained. The fastening system shall be designed to withstand the design loads specified hereinbefore. Fasteners shall be stainless steel, cadmium-plated steel, or aluminum. All fasteners, with the exception of those having integral Hex washer heads and those having aluminum drive caps, shall have composite metal and polymerized chlorphene washers. Fasteners having integral Hex washer heads and fasteners having aluminum drive caps shall have polymerized chlorphene washers. Side laps of roofing sheets or panels having configurations 3/4-inch deep, or less shall be fastened at a maximum spacing of 12 inches on centers.

13A.3.4 Sheet metal accessories. As far as practical, zinc-coated steel accessories shall be provided with zinc-coated siding or roofing, and aluminum accessories shall be provided with aluminum alloy siding and roofing. Zinc-coating for all sheet steel accessories, including louvers, etc., shall conform to specification QQ-S-775, class d. All aluminum accessories, including louvers, etc., shall be of the alloy and temper necessary to suit forming requirements.

(a) Caps, strips, and plates. Ridge caps, eave and edge strips, fascia strips, miscellaneous flashings, and miscellaneous sheet metal accessories, unless specified otherwise, shall be formed from the same material and gage as the roof covering. Wall plates, base angles or base channels, and other miscellaneous framing members may be standard structural steel shapes, or they may be formed from steel not lighter than 16 gage.

(b) Automatic gravity shutters shall be as specified in section entitled "Metal Wall Louvers".

13A.3.5 Miscellaneous accessories.

(a) Closure strips shall be formed of approved compressed rubber, synthetic rubber, bituminous impregnated materials, or metal of the same respective type as the roofing and siding, and as standard with the manufacturer. Molded closure strips shall be free of open voids and shall not absorb or retain water. Closure strips shall be formed to match the corrugations or configurations of the roofing or siding being used and shall be provided where indicated and where necessary to provide weathertight construction.

(b) Joint sealing material. All side and end laps shall be sealed with Type I, Class B ribbon form sealant equal to or exceeding the performance characteristics of specification MIL-C-18969. Minimum sizes of ribbons shall be 3/32-inch by 1/2-inch for rectangular areas and 1/4-inch diameter for circular areas. All joints at doors, windows, accessories, and flashings shall be sealed in a manner similar to the sealing of sheets and panels. Bituminous type sealing materials shall not be used with painted sheets and panels.

13A.3.6 Metal doors and door frames. All metal doors shall conform to the applicable requirements of specification 32Y, except as specified otherwise herein. Doors and frames shall be of the sizes and in the location indicated.

(a) Frames for hinged doors. Hollow pressed steel frames shall be the full welded type or the knock-down field-assembled type. The frames shall be of a type standard with the metal building manufacturer and shall be constructed to be coupled or interlocked with the adjoining wall covering material in an approved manner. The edges of the wall covering material at the sides of the frames shall be reinforced as necessary to form a connection of strength and rigidity which adequately meets design requirements. Lintels above door frames shall be contoured to serve as combination framing and flashing. Doors and frames may be shipped as a part of a prefabricated wall section, or may be packaged for fabrication at the site. Approved structural steel frames may be provided in lieu of pressed steel frames, if such construction is standard with the metal building manufacturer.

(b) Hollow metal hinged doors shall be type III (Industrial) design for exterior use.

(c) Hardware for hinged doors. All hardware shall, as far as practicable, be of one manufacturer's make. Hardware for application on metal shall be made to standard templates. Materials shall be in accordance with the applicable Federal specifications, except that approved aluminum alloy or corrosion-resistant steel hardware may be provided in lieu of the materials specified in the Federal specifications.

(1)Hinges and butts. The sizes and number of hinges shall conform to the minimum requirements given in specification FF-H-116. Loose pin hinges for exterior doors shall be so constructed that the pins cannot be removed when the doors are closed. Type of hinges and butts shall be as specified hereinafter in the paragraph entitled "Hardware sets".

(2) Locksets, latchsets, and deadlocks shall conform to the applicable requirements of specification FF-H-106, except as specified otherwise herein. Series 161 may be provided as an optional equivalent of series 86, and series 160 may be provided as an optional equivalent of series 85. Types and trim for locks and latches shall be as specified hereinafter in the paragraph entitled "Hardware sets".

(3) Miscellaneous hardware shall conform to the applicable requirements of specification FF-H-111, except as specified otherwise, herein. Types and sizes of miscellaneous hardware used on doors, such as bolts, holders, and stops, shall be as specified hereinafter in the paragraph entitled "Hardware sets".

(4) Metal thresholds for hinged doors shall be extruded bronze or aluminum. Thresholds shall extend the full width of the openings and shall be fastened securely to the floor with screws set in expansion shields. Corrosion-resistant or cadmium-plated screws shall be used for fastening aluminum thresholds in place; bronze screws shall be used for fastening bronze thresholds in place. Thresholds, not indicated or specified otherwise, shall be double beveled with fluted tops, and shall be not less than 3 inches wide.

(5) Finishes. All hardware shall have US 10 finish, unless specified otherwise herein.

(6) Keys and keying. Two keys shall be provided for each lock. (Master keying shall be as directed).

(7) Application of hardware. All hardware shall be installed in a neat, workmanlike manner in accordance with the hardware manufacturer's instructions. Fasteners shall be of the proper size, quantity, and finish. After application, hardware shall be protected from paint, stains, belmishes, and damage until acceptance of the work. All hardware shall be properly adjusted and checked out to see that the butts, locks, latches, bolts, holders, and closers operate easily. After hardware is checked, keys shall be tagged, identified, and given to the Officer in Charge. Any errors in cutting or fittings or any damage to adjoining work shall be repaired, as directed.

(8) Hardware sets. Hardware sets shall be provided as follows:

SET NO.		DOOR NOS.	HARDWARE SET
1		All doors	
	Butts	1-1/2 pair	type T2107-US10 -4-1/2x4-1/2
	Lockset	1 each	Type 86B -4
	Threshold	1 each	Cast bronze with weatherstrip interlock
			Door stop with hook type 1321

13A.3.6 Metal windows shall be complete, including frames, sash, flashings, hardware, operating devices, fastening devices, clips, and all other appurtenances necessary for a complete installation and for proper operation. At the option of the Contractor, the windows shall be either steel or aluminum.

(a) Steel windows shall be the standard commercial projected type, conforming to the applicable requirements of the steel window specifications of the Steel Window Institute, except as specified other-

wise herein. Steel windows shall be given a phosphoric acid treatment and a factory-applied prime coat of an approved rust-inhibitive primer, of a type standard with the window manufacturer.

(b) Aluminum windows shall be the standard (commercial projected) type, conforming to the applicable requirements of the aluminum window specifications of the Aluminum Window Manufacturers Association, except as specified otherwise herein. The minimum metal thickness for principal members of solid section windows shall be 1/8 inch.

(c) Window lintels, heads, jambs, and sills shall be a type standard with the metal building manufacturer, and shall be constructed to be connected, or interlocked, and with the adjoining wall covering material in an approved manner. The edges of the wall covering shall be reinforced as necessary to form jambs or strength and rigidity which adequately meet design criteria. Lintels,heads, and sills shall be formed from the same type of sheet metal as the wall covering, except that extruded aluminum may be used with aluminum windows. Structural steel frames and/or lintels may be provided in lieu of sheet metal or extruded aluminum frames and/or lintels, if such construction is standard with the metal building manufacturer. Sheet metal and extruded aluminum lintels, heads, and sills shall be contoured to serve as combination framing and flashing.

(d) Operation of windows. Ventilators within reach of the floor shall be operated by means of handles or push bars; those more than six feet above the floor shall be operated by means of poles. Hardware for all windows shall be of plain pattern, and of malleable iron or steel of the manufacturer's standard type.

13A.3.7 Shop painting. All ferrous metal work, except factory finished work, zinc-coated work, aluminum-coated work, and work specified to be painted hereinbefore, shall be (1) cleaned of all dirt, rust, scale, loose particles, grease, oil, and other deleterious substances, (2) given a coat of pretreatment primer conforming to specification MIL-P-15328 applied to a dry film thickness of 0.3 to 0.5 mil or chemically treated with a phosphoric type cleaner, and (3) then be given one coat of an approved rust-inhibiting primer paint of the type standard with the metal building manufacturer.

13A.3.8 Factory finishing. Exterior and interior exposed surfaces of metal roofing, metal siding, louvers, and metal accessories shall be provided with a factory applied baked on enamel finish. The finish shall consist of cleaning, pretreatment with a chemical conversion coating and one coat of baked on synthetic enamel applied to a dry film thickness of not less than 1 mil.; color shall be as elected. The Contractor shall

furnish the Officer in Charge certified test reports from approved laboratories showing the type of sheets being furnished have been tested and have passed the following tests:

(a) Salt spray test. A 12 inch by 12 inch sample of the siding and roofing, with a minimum of two raw cut edges, shall withstand a salt-spray test for a minimum of 1,000 hours in accordance with ASTM specification B117. Undercutting of the paint film from the score line shall not exceed 1/16 inch.

(b) Accelerated weathering test. A 12 inch by 12 inch sample with a minimum of two raw cut edges shall withstand a weathering test a minimum of 1,000 hours in accordance with ASTM specification 822 without checking, cracking or loss of adhesion.

(c) Flexibility. When formed over a conical madrel, the film shall show no crack beyond a point where the mandrel diameter is equal to five times the metal thickness.

(d) Adhesion. There shall be no film removed by pulling off sharply No. 600, 3/4 inch wide scotch cellophane tape applied to 10 parallel cuts spaced 1/16-inch apart plus 10 similar cuts at right angles. Cuts shall be made with a sharp knife.

(e) Field tests. At the discretion of the Officer in Charge, sample sheets for tests may be taken at random from each delivery or from stockpiles on the site at any time during the construction period. Tests may be made to check the conformance of the materials with the above acceptance tests and with other requirements specified herein. Failure of the sample sheets to pass all of the required tests shall be cause for rejection of all sheets represented by the samples.

13A.3.9 Dissimilar materials. Where aluminum surfaces come in contact with ferrous metal or other incompatible metals, the aluminum surfaces shall be kept from direct contact by one of the following methods:

(a) Painting the incomptible metal with a coating of heavy-bodied bituminous paint conforming to specification MIL-P-6883;

(b) Painting the incompatible metal with a prime coat of zinc-chromate primer conforming to specification TT-P-645, followed by one or two coats of aluminum metal-and-masonry paint, or other suitable protective coating, excluding those containing lead pigmentation;

(c) An approved nonabsorptive gasket;

(d) An approved calking placed between the aluminum and the incompatible metal.

If drainage from incompatible metal passes over aluminum, the incompatible metal shall be painted by method (a) or method (b). Aluminum surfaces in contact with concrete or masonry materials shall be painted by method (a). Green or wet wood, or wood treated with incompatible wood preservatives, shall be painted by method (a) or shall be given two coats of aluminum paint.

13A.3.10 Glazing. Glass shall conform to specification DD-G-451. Elastic glazing compound, type I, conforming to specification TT-P-781, shall be used for glazing sash and doors.

(a) Clear sheet glass, Type II, Class L, quality q6, (single strength) shall be used for glazing.

(b) Setting. All glass shall be bedded and back puttied, using the elastic glazing compound or putty specified, and shall be set without springing or forcing. Glass in sash shall be set with glazing clips, and compound or putty. Glass in doors shall be held in place with the stops specified under other sections.

(c) Cleaning. Following the completion of the buildings, all glass shall be washed clean.

13A.4 Erection. Concrete foundations and floor slabs shall be level and true, and shall be inspected and approved before the structural steel work is started. Anchor bolts shall be installed while the concrete work is in progress; templates or other gaging devices shall be used to assure accurate spacing of the anchor bolts. Defects or errors in the fabrication of building components shall be corrected by the Contractor in an approved manner. Defects or errors in fabrication of components, which can not be corrected in an approved manner, shall be replaced by nondefective members at no additional cost to the Government. Columns, rigid frames, and walls of self-framing buildings shall be plumbed in both directions, guyed and stayed, and all framing elements shall be accurately spaced to assure the proper fitting or prefabricated wall and roof coverings.

13A4.1 Rigid frames, column bases, and sill members shall be set accurately, using a non-shrinking grouting mortar to obtain uniform bearing on the concrete and to maintain a level base line elevation. Anchors and anchor bolts for securing rigid frames, columns, or sill members to foundations shall be steel, unpainted, set accurately to templates, and of proper size to adequately resist all applicable design loads at the base. Grouting mortar shall be a mixture of one part of blended portland cement, to two parts of well-graded fine aggregate, and enough water toprovide a maximum water cement ratio of 0.50. The blended portland cement shall be a mixture of cement with 1/4 ounce of aluminum powder to each sack of cement. Surfaces to receive the mortar shall be cleaned and moistened thoroughly immediately before placement of mortar. Exposed surfaces of mortar shall be water cured with wet burlap for 7 days.

13A4.2 Wall construction. All sheets or panels shall be applied with the corrugations, V-beams, ribs, channels, or other configurations in a vertical position. Sheets or panels shall be supplied in full wall heights from base to eave with no horizontal joints except at the junctions of door frames, window frames, louver panels, and similar locations. All side and end laps shall be sealed with the joint sealing material specified hereinbefore. All walls shall be flashed and/or sealed at the base, at the top, around windows, doors, framed louvers, and all other similar openings. The placement of closure strips, flashing and sealing material shall be accomplished in an approved manner that will assure complete weathertightness. Flashing will not be required where approved "self-flashing" sheets or panels are used. Minimum end laps for all types of sheets or panels shall be 2-1/2 inches. Minimum side laps for all types of sheets or panels shall be one corrugation or one configuration.

13A.4.3 Roof construction. All roofing sheets or panels shall be applied with the corrugations, ribs, channels, or other configurations parallel to the slope of the roof. The roofing sheets or panels shall be supplied in full lengths from ridge (or ridge panel) to eaves (top to eaves on shed roofs) with no transverse joints except at the junction of ventilators, curbs, skylights, chimneys, and similar openings. All side laps shall be laid away from the prevailing wind, and all side and end laps shall be sealed with the joint sealing material specified hereinbefore. The roof shall be flashed

and sealed at the ridge, at eaves and rakes, at projections through the roof, and elsewhere as necessary. The placement of closure strips, flashing, and sealing material shall be accomplished in an approved manner that will assure complete weathertightness. The use of various types of roof covering in relation to roof slopes shall be as follows:

Roof Slope	Minimum End Laps			Remarks
	Standard	Deep	Panel	
1:12	-	10	8	Deep corrugated or panel type only.

(Slopes less than 1:12 shall not be used)

Minimum side laps for roof covering shall be as follows:

Roof Covering	Minimum Side Laps
Deep corrugated type	One full corrugation or configuration
Panel type	One full configuration or interlocking rib

13A.5 Quality Control. Provisions of Section entitled "Contractor Quality Control" shall apply.

13A.5.1 Samples. One sample of each proposed type of siding material, roofing material, fastener, hardware item, insulation, and miscellaneous accessory shall be submitted and approved.

13A.5.2 Materials, tests and test reports. The testing requirements incorporated in referenced documents for materials will be waived, provided certified copies of reports of tests from approved laboratories performed on previously manufactured materials are submitted and approved. Test reports shall be accompanied by notarized certificates from the manufacturer certifying that the previously tested material is of the same type, quality, and manufacture as that furnished for the project.

---o0o---

DIVISION 14. CONVEYING SYSTEMS

Section 14A Hydraulic Elevator
14B Bulk Lime Handling System

SECTION 14A HYDRAULIC ELEVATOR

14A.1 General requirements. The work includes the provision of one oil hydraulic plunger type freight elevator complete and ready for operation. The elevator and all materials and workmanship shall conform to all applicable requirements of 14Y and ANSI A17.1, except as specified otherwise. The size and general arrangement of elevator shall be as indicated.

14A.2 Applicable publications. The following publications of the issues listed below, but referred to elsewhere by basic designation only, form a part of this specification to the extent indicated by the references thereto (where a number is suffixed to the specification number, it denotes the effective amendment to the specification):

(a) Bureau of Yards and Docks/NAVFAC Specifications.

14Yf Electric and hydraulic elevators.

(b) Non-Government Specifications and Standards.

American National Standards Institute (ANSI/USA)

A17.1 - 1968 Safety code for elevators, dumbwaiters, and escalators.
A17.2 - 1967 Inspection of elevators.

14A.3 Elevator. The capacity listed shall be exclusive of weight of assembled car, plunger and other equipment. Design, operational and other requirements shall be as follows:

Capacity (live load)	2,500 pounds
Speed	65 feet per minute up
Travel	10 feet
Floor served	1 and 2

Entrances per Floor	One
Platform size - Width	5 feet, 4 inches
Platform size - Depth	7 feet 0 inches
Door type	Manual horizontal slide
Clear opening	51 inches wide by 90 inches high
Elevator operation	single automatic
Elevator power	Electro-hydraulic
Elevator control	AC rheostatics
Pump motor	480 volts, 3 phase, 60 cycle

14A.3.1 Electrical service to elevator control circuits. The elevator equipment manufacturer shall provide as an integral part of the control equipment a dry-type transformer to convert from 480 volts to 120 volts for the electrical service to the elevator control circuits.

14A.4 Maintenance and inspection service. Full regular service in conformance with 14Y shall be provided; except that in lieu of the period of three months of maintenance, the period shall be one year of maintenance.

14A.5 Elevator construction experience and certification. The Contractor shall submit data which will show that he has successfully built and installed five elevators of the same type (hydraulic) and of the same control features as that specified herein, or that he has a firm contractural agreement with a subcontractor having such required experience. The data shall include the names and locations of at least five installations where the Contractor, or the subcontractor referred to above, has installed such elevators. The Contractor shall indicate the type, size, rise, speed, load, and the control features employed at these installations and certify that these elevators have performed satisfactorily in the manner intended for a period of not less than 18 months.

14A.6 Hoistway and associated work necessary for elevator installation shall be provided under other sections of this specification in accordance with applicable requirements of 14Y. Work shall be in accordance with approved shop drawings for elevators.

14A.7 Car operation and control for elevator shall be for single automatic operation.

14A.7.1 Provide one six inch emergency alarm bell mounted within hoistway at first floor including all wiring. Alarm bell shall function when emergency stop switch in car operating panel is opened or when emergency alarm button is closed. Operation of emergency stop switch in car operating panel shall interrupt power to pump motor and close main oil control valve independently of regular operating device. Second alarm bell shall be provided and located where directed by the Officer in Charge.

14A.7.2 The operating devices for single automatic operation shall consist of a car operating panel in car containing a series of car dispatch push buttons corresponding to various landings served and single landing call button at each landing, all electrically connected with the controller switches governing floor selection, direction of travel, acceleration and retardation to provide operation as specified.

14A.7.3 The system shall be so arranged that, when the car is not in use, upon the momentary pressure of a landing call button at a floor, the car shall start automatically and then automatically stop at that floor. The landing call buttons shall be inoperative while the car is in transit and for a predetermined time after the car stops at a floor landing. The momentary pressure of a car dispatch button shall automatically start the car and send car to the designated landing. In all cases, the starting of the car shall be contingent upon the establishment of hoistway door interlock and car gate contact circuits. Provide "In Use" signal light in each landing call button fixture which shall be illiminated as long as the car is in use.

14A.7.4 Provide flush type car operating panel. The car operating panel shall contain, in addition to the car dispatch buttons for each opening served the following devices:

(a) Emergency stop switch, red in color.

(b) Emergency signal button connected to an emergency signal bell located in hoistway at lower main terminal floor. Signal bell shall have a 6 inch diameter gong.

(c) Car light switch.

(d) Fan or blower switch.

(e) Key operated inspection switch that will permit making normal operation inoperative for the purpose of using hoistway access switch.

14A.8 Hydraulic elevator machine shall be in accordance with 14Y. Noise (acoustical output) level of entire power system shall not exceed 85 decibels measured on "C" scale of ANSI standard sound level meter located three feet from power unit in machine room, under full contract load either ascending or descending. Optionally, Contractor may provide approved hot applied coal tar coating in tape form to cylinder in lieu of the double mopping of hot asphalt required in 14Y. A protective coating for cylinder casing shall be provided, similar to that used for cylinder. Provide approved tank shut-off valves in flexible oil supply lines to isolate oil in tank for maintenance purposes. Provide approved gate valve at cylinder inlet. Provide oil line stra-ner at cylinder inlet, arranged for easy maintenance. Car shall level and relevel within 1/4 inch of exact level in lieu of 1/2 inch specified in 14Y.

14A.8.1 Cylinder casing shall be of sheet steel of sufficient thickness to withstand the surrounding earth pressure and be watertight. The bottom shall contain a welded-on plate that shall be watertight. The protective coating specified hereinbefore shall be applied to all exterior and interior casing surfaces. A bed of concrete not less than one foot thick shall be provided to seat bottom of casing.

14A.8.2 Cylinder well, cylinder and plunger shall be provided for elevator. Cylinder and plunger shall be of ample construction and design to support total rise. Permanent stop ring at bottom of piston shall permit total normal travel. Oil reservoir shall be sized to contain normal volume of oil required for rise plus reserve as specified.

14A.9 The elevator control shall be AC rheostatic with automatic leveling. The elevator controller shall be designed to control the starting, stopping, and speed of the elevator motor to give the operation herein specified. All control equipment shall be enclosed in sheet metal cabinets with removable or hinged doors and provided with ventilating louvers. Controller mounting shall be designed to prevent transmission of vibration or noise to the building. No conduits shall be fastened directly to or supported by the controller frame or machinery.

14A.9.1 Controller shall be provided. The controller shall contain electromagnetic switches mounted on a panel of approved material which shall be securely mounted on a substantial self-supporting steel frame. Bottom edge of the controller panel shall clear the floor by at least 6 inches. The controller shall provide the required electrical operation of the elevator control system including the automatic closing of the main oil supply control valve which shall bring the car to rest, upon failure of power or upon the operation of any of the elevator safety devices.

14A.9.2 Switch and relay contacts provided on the controller panel, shall be designed to prevent sticking due to fusing. The controller circuit shall be designed so as to minimize arcing across contacts. All wiring shall be mounted on the rear of the panel, neatly formed either vertically or horizontally and cleated. The wiring on the back of the panel shall have flame resistant type insulation. All connections to field apparatus shall be made at clearly designated junction blocks or studs. Mounting of wiring on back of controller panel as noted above may, at the option of the Contractor, be mounted on panel front subject to following requirements:

(a) Resistors and other electrical components such as tubes, rectifiers, capacitors, etc., shall be independently bracket mounted on panel front, either adjacent to control device to which they serve or group supported on independent racks.

(b) Control panel wiring shall be extended through surface raceways mounted and operating on panel front. Raceway layout shall consist of trunk, feeder and branch ducts in sufficient numbers operating in vertical and horizontal directions on controller panel. Control devices shall be served directly from branch ducts only. Branch ducts shall operate parallel to each other and shall serve no other than one adjacent row of devices mounted in single plane on each side of branch duct. Wiring connections shall not impair in any way operation of any control device.

(c) Surface raceway ducts shall be of material having high dielectric rating, high impact strength, low moisture absorption, and must be incapable of supporting combustion. Ducts shall be rigidly secured to controller panel and fitted with easily removable cover sections. Sufficient number of slots shall be available throughout sides of raceway ducts to permit extensions to and connection of wires to control devices. Slots shall have smooth rolled edges to prevent abrasion of conductors, all duct joints, corners, cover sections, etc., shall be smooth and continuous with no sharp edges. Raceway ducts shall be equipped with means to allow gravity air ventilation for heat dissipation.

(d) Wiring in raceways shall be neatly formed and bound. Wires shall be protected at duct bends and corners. Sum of cross sectional conductors in any raceway section shall not exceed 50 percent of net interior cross sectional area of duct. Control panel duct sizes and spacing shall be planned accordingly.

14A.9.3 Provide overload relay protection in underground motor conductor and approved single and reverse phase protection. Identify each device on panels properly by name, letter or standard symbol which shall be neatly stencil painted, (or otherwise marked) in indelible and legible manner; on device or panel. Coordinate identification markings

with identical markings used on wiring diagrams.

14A.9.4 Self-leveling. Each elevator shall be provided with a self-leveling feature that will automatically bring the car floor to within 1/4 inch of level with the floor landing regardless of load, or direction of travel. Thisself-leveling shall, within its zone, be entirely automatic and independent of the operating device, and shall be designed to prevent or correct overtravel as well as undertravel of the car with respect to the landing sill level.

14A.10 Operating panels and signal devices shall be in accordance with applicable requirements of 14Y. Materials and finish of all exposed portions of car operating panels and signal fixtures shall be corrosion resisting steel, Class 302, finish No. 4. Registered call signal indicators are required for all landing call stations of elevator. Provide landing position indicator at all entrance openings. Provide "In Use" lights in landing call stations of elevator.

14A.11 Hoistway and car equipment shall be in accordance with 14Y. Delete all references to "counterweights", "car safeties", and "with attendent operation". Fish plate bolts shall be drawn up tight in lieu of "fitted with split spring lockwasher" as specified. Guide rails shall extend to within 1/8 inch per floor of rise from overhead hoistway enclosure roof slab. Pit switch shall "close main oil supply control valve" in lieu of "apply brake" as specified. Final terminal stopping devices are not required. Elevator cars shall be equipped with flexible type sliding guide shoes, and the guide rails therefor shall be lubricated. Delete requirement of "spring take up for side play" related to car guide shoes. Car telephone, intercom loudspeaker and related circuits are not required. Mileage recorder is not required.

14A.11.1 Provide hoistway access switches at top and bottom landings of elevators. Hoistway access switches shall be of key operated cylinder lock types. Fixtures and covers shall be flush recessed mounted, 6 foot 0 inches on center in hoistway entrance frame jamb section. Cover material shall be corrosion resiting steel. It shall be possible to operate elevator, at slow speed in either direction of travel, for distance equal to one car length down from "top" terminal

landing and one car length up from "bottom" terminal landing when maintaining movement of elevator from hoistway access switch station.

14A.11.2 Provide manual hoistway door operators for all openings of equipment lift elevator. Manual door closers for hoistway doors shall be of the manual opening automatic closing type, so arranged that a continuous pull on the handle opens the door and when the handle is released the door shall close rapidly to near closing position and then a liquid checking device shall bring the door to a noiseless and easy stop. Hoistway door interlocks shall be of a type suitable for operation in connection with door closer and shall be of the same manufacture. The liquid checking device shall have adjustments for controlling door closing speed. The pivots and bearing points in door closer arms shall be designed with such bearing area, materials and clearances as to insure minimum wear, and shall be provided with means of lubrication.

14A.12 Elevator car frame, platform and enclosure shall be in accordance with 14Y. Car entrance thresholds shall be white bronze or nickel, cast or extruded at Contractor's option. Wood filled car platform is required. Contractor may provide approved 1/8 inch thick, flexible homogeneous vinyl tile in lieu of rubber tile specified for covering car platform. Emergency car lighting is required. Normal car lighting fixtures shall be fluorescent tube type.

14A.12.1 Emergency exit shall be provided in top of car. The exit shall, in addition to the ANSI Code requirements, be hinged, shall be unobstructed when open, shall have a mechanical stop, and shall be arranged to open from outside of car only, without the use of tools. The exit shall be equipped with a contact which shall prevent operation of the car unless the exit panel is fully closed.

14A.13 Hoistway doors and entrances shall be arranged for manual operation in accordance with 14Y. Sills shall be cast or extruded, white bronze or nickel steel.

14A.14 Elevator tests and inspection shall be in accordance with 14Y. During full load run test, standing time shall be established for 30 seconds in lieu of 10 seconds specified. Speed test shall be determined by applying tachometer to face of guide rails in lieu of cables specified.

14A.15 Shop drawings and illustrations shall be submitted for approval before proceeding with any work, detailing the following for each elevator:

14A.15.1 Location of machine and control equipment.

14A.15.2 All equipment Contractor proposes to provide, such as machinery switchboards, platform and car frame, guide rails and brackets, junction boxes in hoistway and machine room, complete layout of hoistway, in plan and elevation, location and direction of all reaction loads and all other necessary layout information required by the ANSI Code.

14A.15.3 Type of machine, control valve assembly, controller and buffers, including HP, GPM, operating pressures and RPM.

14A.15.4 Location of cutouts on hoistway wall for landing push button stations and landing position indicators.

14A.15.5 Location of inserts for guide rail brackets.

14A.15.6 Location of doors and hoistway entrance frames.

14A.15.7 Location of main power switch or circuit breaker in machine room, extension of main feeders and branch feeders,as required.

14A.15.8 All detail drawings or illustrations or photographs of fixtures, hoistway and car door details, door operator, interlocks, design of car enclosure, car operating panels and signal fixtures, design of hoistway entrances and other features of control and car operation.

14A.15.9 Location and size of hoistway openings,jamb returns, size and type of construction of hoistway walls, and location of light and power outlet and telephone outlet boxes in the hoistway.

14A.15.10 Size of elevator car platform and its location in the hoistway.

14A.16 Quality control. Provisions of section entitled "Contractor Quality Control" shall apply.

SECTION 14B. BULK LIME HANDLING SYSTEM

14B.1 Applicable publications. The following publications of the issues listed below, but referred to elsewhere by basic designations only, form a part of this specification to the extent indicated by the references thereto (where a number is suffixed to the specification number, it denotes the effective amendment tothe specification):

(a) BUREAU OF YARDS AND DOCKS/NAVFAC SPECIFICATIONS.

53Y Piping for power plants and heating plants and systems.

(b) Non-Government Specifications and Standards.

American Society for Testing and Materials (ASTM)

B 483-68T Drawn tubes for general purpose applications, aluminum alloy.

14B.2 General Requirements. Provide a bulk lime unloading and handling facility with provision for unloading rail cars and trucks and pneumatically blowing lime into two storage hoppers. The system shall have a capacity of 400 pounds per minute when handling lime weighing 52.4 pounds per cubic foot. The system shall be theproduct of a manufacturer normally engaged in production of such system, and the major items of equipment shall be standard products of the manufacturer. Generally, the system shall include a conveying blower, airslide blower, portable car unloader, storage hoppers, dust collectors, and piping as shown on the drawings, and as required.

14B.3 Blowers. The unloading blower and airslide blower shall be of the heavy duty rotary positive displacement type. Blowers shall be belt driven by 470 volt 3 phase horizontal totally enclosed electric motors. Each motor and blower shall be mounted on a structural steel frame with provision for belt tension adjustment. Provide suitable air intake cleaner and belt guard. Capacity and discharge pressure of each blower shall be as recommended by the unloading system manufacturer and shall be sufficient to provide unloading at the rate set out hereinbefore.

14B.4 Car unloader shall be a portable wheel mounted airslide car unloader for unloading hopper type rail cars. Unit shall include a 7 inch high speed tubular screw conveyor with no intermediate hanger bearings, a paddle type kicker on the end of the screw to move materials into a rotary conveying valve, and a motor which drives both screw and valve. Quick coupling connectors shall be provided for hook up to air lines from the blowers and to the storage hoppers. An air manifold shall be provided to receive air from the air slide blower and distribute it to the rail car airslide inlets. The entire unit shall be mounted on two 16 inch pneumatic tires located near the center of gravity of the unit for proper balance. Unit shall be furnished complete with hoses as required to connect to the blower lines, vent lines, product lines, etc., for proper operation.

14B.5 Storage hoppers shall be constructed of structural steel shapes and plates. All materials, erection, welding, etc., shall conform to Section entitled "Structural Steel". Each hopper shall be provided with an air operated hopper vibrator or impactor to prevent bridging of materials in the hopper. Unit shall be furnished with an off-on switch and a timer to provide blow frequency adjustment from 1 to 30 times per minute. Provide a three way solenoid valve 1/2 inch port size to operate with the timer. The controls for each vibrator shall be mounted in a 4 inch by 4 inch by 6 inch dust right box wall mounted adjacent to the lime feeder connected to the hopper, and the controls shall be wired so that the vibrator operates when the feeder operates.

14B.6 Dust collectors shall be mounted on each hopper and shall be bag type filter collectors consisting of steel housing, filter bags, headers and automatic 3 way purge valves. The collector shall be made up of a series of small diameter cloth bags attached to a header piece suspended inside a housing. Filter cloth area shall be not less than 135 square feet. Provide timer operated three way solenoid purge valves to properly backwash the filters with compressed air. Dust material shall fall back into the hopper when the unit is backwashed. There shall be a large access door in the housing of the dust collector to allow access to and removal of the filter bags and headers from the unit.

14B.7 Piping. Provide a complete bulk handling piping system as required for proper operation. Piping shall be aluminum tubing conforming to ASTM B 483. All bends shall be long radius type. Joints shall be slip on design consiting of a neoprene compression ring and gland with bolts. Fittings shall be of a type specifically designed for conveying service. Provide quick disconnect couplings for connection of wire would flexible rubber hoses to the portable car unloader. Couplings shall be cast aluminum complete with covers and caps. Piping shall be run true and parallel to building walls and floors and supported in accordance with 53Y. Provide galvanized steel recessed wall boxes for connection of portable car unloader to blowers and hoppers as shown on the drawings. Boxes shall be constructed in a neat and workmanlike manner from 14 gage galvanized steel and shall be NEMA Type 12 with single door, neoprene door gasket, hasp and staple.

14B.8 Controls. Provide start stop buttons in the wall box for control of the unloading blower, air slide blower, and each dust collector timer. All wiring, raceways, devices, equipment, etc., shall comply with Division entitled "Electrical".

14B.9 Drawings Required of the Contractor. Before commencing any work, the Contractor shall submit for approval shop drawings and layouts of each system included in this section of the specifications. Layouts shall be based on field-established conditions; and interference between architectural, mechanical, electrical, and structural systems that cannot be resolved in the field shall be clearly defined. Shop drawings shall contain complete information in detail to show compliance with the specification. The following minimum information shall be furnished for each submitted item:

(a) Reference shall be made to the paragraph or subparagraph of the specification that specified the item.

(b) The intended use shall be specifically stated.

(c) Complete physical data shall be furnished.

(d) Complete certified performance data shall be furnished to show the actual capacity of the equipment as tested.

(e) Noncomplying features and reason for noncompliance shall be stated in detail.

(f) Partial submittals, or submittals of less than the whole of any system made up of interdependent components will not be considered.

14 B.10 Quality control. Provisions of Section entitled "Contractor Quality Control" shall apply.

DIVISION 15 MECHANICAL

Section 15A Plumbing
15B Air Conditioning, Heating and Ventilating
15C Plant Piping and Accessories
15D Well Construction
15E Water Distribution and Raw Water Piping
15F Exterior Sanitary Systems
15G Gaoline Engine Driven Electric Generators

SECTION 15A PLUMBING

15A.1 General requirements. The work includes the provision of plumbing systems and related work. Each system shall be complete and ready for operation. All piping shall be run concealed except where indicated otherwise. All piping shall be inspected, tested and approved before being buried, covered or concealed. All materials and workmanship shall be in accordance with 31Y, 53Y and 54Y except as specified or indicated otherwise. Plumbing systems shall be connected to building service piping. Plumbing systems shall include all piping above and below ground except sanitary, water and roof drainage piping more than five feet from the outside of the building walls are specified in the sections entitled "Exterior Sanitary Systems", "Water Distribution and Raw Water Piping" and "Storm Drainage".

15A.2 Applicable publications. The following publications of the issues listed below, but referred to elsewhere by basic desingation only, form a part of this specification to the extent indicated by the references thereto (where a number is suffixed to the specification number, it denotes the effective amendment to the specification):

(a) Bureau of Yards and Docks/NAVFAC Specifications.

31Yg Interior plumbing systems; with erratum no. 1.

34Yd Bituminous coating systems for steel surfaces, including addendum No. 1.

42Yc Drainage; sanitary, electrical and water service appurtenances.

53Y Piping for power plants, heating plants and systems.

54Y Insulation for piping, ductwork, and equipment inside buildings and plants.

(b) Federal and Military Specifications.

W-H-196f	Heaters, water, electric, storage, domestic.
GG-G-76c(1)	Gages, pressure and vacuum, dial indicating.
GG-T-321c(1)	Thermometers, self indicating, liquid in glass.
HH-I-558a(2)	Insulation, blocks, boards, blankets, felts, sleeving (pipe and tube covering), and pipe fittings, covering thermal (mineral fiber, industrial type).
OO-D-566(2)	Dispensers, drinking water, mechanically cooled.
QQ-C-40	Calking, lead wool and lead pig.
WW-H-171c(1)	Hangers and supports, pipe.
WW-P-401d	Pipe and pipe fittings; cast iron, soil.
WW-P-404c(2)	Pipe, steel, (seamless and welded, black and zinc coated galvanized).
WW-P-406c	Pipe, steel (seamless and welded).
WW-P-421c	Pipe, cast iron, pressure.
WW-P-491b	Pipe fittings, cast iron, drainage.
WW-P-501d	Pipe dittings,cast iron, screwed (125 and 250 pound).
WW-P-521f	Pipe fittings, flange fittings and flanges.
WW-P-541b(4)(6)	Plumbing fixtures.

WW-T-799c	Tubing, copper, seamless.
WW-U-531c	Unions, pipe, steel or malleable iron (threaded connection).
WW-V-51d	Valves, bronze, angle, check and globe (125, 150 and 200 pound screwed, flanged and solder).
WW-V-54c(1)	Valves, bronze, gate (125, 150 and 200 pound; screwed, flanged and solder).
WW-V-58a(1)	Valves, cast iron, gate (125 and 250 pound; screwed and flanged).
MIL-V-12003C(3)	Valves, plug; cast iron or steel, manually operated.
MIL-V-13612C	Valves, relief, pressure and temperature.
MIL-S-16293E	Strainers, sediment, pipeline.
MIL-C-19565B(1)	Coating compounds, thermal insulated pipe covering - fire and water resistant, paper barrier weather-resistant.

(c) Non-Government Specifications and Standards.

American Water Works Association (AWWA)

C601-68	Disinfecting water mains.

Cast Iron Soil Pipe Institute (CISPI)

No. 301-69T	Hubless cast iron sanitary system.

National Fire Protection Association (NFPA)

No. 30-1969	Flammable and combustable liquids code.
No. 54-1969	Gas appliances and gas piping.
No. 59-1969	Liquefied petroleum gases.
No. 70-1968	National Electrical code.

Plumbing and Drainage Institute (PDI)

WH-201-1965	Water hammer arrestors.

American National Standards Institute (ANSI/USA)

A21.10-1964	Cast iron fittings, 2 inch through 48 inch, for water and other liquids.
A21.11-1964	Rubber gasket joint for cast iron pressure pipe and fittings.
B16.18-1967	Cast bronze solder joint pressure fittings.
B16.22-1963	Wrought copper and bronze solder joint pressure fittings.

15A.3 Sanitary (Sewer, soil, vent) and drain piping.

15A.3.1 Piping buried in the ground shall be coated extra heavy cast iron bell and spigot pipe and fittings conforming to WW-P-401, Class XH.

15A.3.2 Piping above the ground. Vents and interior downspouts and waste piping less than 3 inches in diameter shall be zinc coated standard weight screw jointed steel pipe conforming to WW-P-404 or WW-P-406 with zinc coated cast iron screw jointed drainage fittings conforming to WW-P-491. All other piping shall be coated service weight cast iron bell and spigot pipe and fittings conforming to WW-P-401, Class SV.

15A.3.3 Hubless cast iron piping. In lieu of service weight cast iron bell and spigot pipe or screw jointed steel pipe specified hereinbefore the Contractor may use hubless cast iron piping and fittings for pipe sizes 1-1/2 inches thru 6 inches. Where pipe sizes 2-1/2 inches and 3-1/2 inches are indicated, the Contractor shall provide the next larger size pipe. The hubless joint shall be of the coupling type and shall consist of two pipe or fitting spigot ends, a sealing sleeve, and a shield and clamp assembly. The sealing sleeve shall consist of a double seal compression molded neoprene gasket. The shield and clamp assembly shall consist of a stainless steel corrugated shield, two stainless steel bands, and two stainless tightening devices. Each tightening device housing shall interlock with a band at the unslotted end. The bands shall be fused to the shield by spot welding riveting

or such other method that will insure that the bands will not become separated from the shield. The sealing sleeve and the shield and clamp assembly shall be of the same length. The hubless cast iron sanitary system, including installation, shall be in accordance with Cast Iron Soil Pipe Institute Standard No. 301.

15A.4 Pipe joints.

15A.4.1 Leaded joints in cast iron pipe. Before jointing, all lumps, blisters, and excess coating material shall be removed from the bell and spigot ends of the pipe. All oil or grease shall be removed. The outside of the spigot and inside of the bell shall be wire brushed and wiped clean and dry. Spigots shall be adjusted in the bells so as to give uniform space all around; if any pipe does not allow sufficient space for proper caulking, it shall be replaced with one of proper dimensions. Adjacent lengths of pipe shall be adjusted with reference to each; blocking or wedging between hub and spigot will not be permitted. Molded or tubular rubber shall be sued as gaskets, except gaskets in sanitary piping may be braided or twisted hemp or oakum gaskets of the best commercial grade. The gaskets shall be driven or calked tightly into the annual spaces between the pipe and shall be of proper size to seal the joint tightly and leave sufficient space for lead as specified. Where rubber rings are used as gaskets, a braided or twisted hemp or jute ring shall be calked into the joint after the rubber ring is placed to prevent contact of the molten lead with the rubber. Gaskets shall not project into the bore of the finished joint. When the joints are approved for pouring, the joints shall be cleaned and remaining space filled at one pouring with lead which shall be calked in a manner that will assure tight joints without overstraining the bells. The depth of lead shall not be less than 1-3/4 inches measured from the face of the bell. After calking, the lead shall be practically flush with the face of the bells. The lead shall conform to QQ-C-40.

15A.5 Water piping. Dielectric unions shall be provided at all connections between ferrous and nonferrous piping or metals.

15A.5.1 Piping buried in the ground. Piping less than 2 inches shall be copper tubing. Piping 2 inches to 3 inches shall be copper tubing or cast-iron piping. Piping 4 inches and larger shall be cast-iron piping. Push-on joints for cast-iron piping will not be permitted on piping under the building or less than five feet beyond the outside building walls.

(a) Copper tubing shall conform to WW-T-799, Type K. Fittings shall be solder-joint cast bronze or wrought copper fittings conforming to ANSI B16.18 and B16.22 respectively; adaptors shall be provided as required. Solder shall be 95-5 tin-antimony solder.

(b) Cast-iron piping shall be outside-coated, cement-lined, cast-iron pipe conforming to WW-P-421, Class 150. Fittings shall be outside-coated,cement-lined, cast-iron fittings conforming to ANSI A21.10, with joints to match the pipe. Adaptors shall be provided for connection of pipe and fittings to flanged accessories. The gaskets shall be furnished with the piping and shall be as recommended by the piping manufacturer.

15A.5.2 Piping above the ground shall be copper tubing conforming to WW-T-799, Type L. Fittings shall be solder-joint cast bronze or wrought copper fittings conforming to ANSI B16.18 and B16.22 respectively; adaptors shall be provided as required. Solder shall be 95-5 tin-antimony or 50-50 lead-tin.

15A.5.3 Water valves. All shutoff valves shall be gate valves, except where their use is not practicable. Gate valves of size 2 inches and smaller shall conform to WW-V-54. Gate valves larger than 2 inches shall conform to WW-V-58. Angle, check, and globe valves shall conform to WW-V-51; check valves shall be Type IV. Valves for connection to copper tubing may be of the solder-joint type. Compression stops shall be provided on supplies to all fixtures. Water valves shall be provided in accessible places and shall be located as follows: Main shutoff valve just inside the building wall; valve with hose connection on the building side of the main shutoff valve; shutoff valve on each supply to each fixture not provided with compression stop or with other auxiliary shutoff valve; shutoff valve at the bottom of each riser and beginning of each lateral on all hot and cold water lines.

15A.5.4 Surge suppressors shall be provided and shall be a standard commercial type in accordance with PDI standard WH-201.

15A.5.5 Water pressure and temperature relief valves with test lever shall conform to specification MIL-V-13612 and shall have a relieving capacity in excess of the heater input capacity.

15A.5.6 Thermometers shall conform to GG-T-321, Type I, Class 3. Scale range shall be suitable for the intended service.

15A.5.7 Strainers shall conform to MIL-S-12693, Class 125, Style Y.

15A.5.8 Gages shall conform to GG-G-76, Class 1, Style A, Type I, with a 4-1/2 inch dial, brass or aluminum case, bronze tube. Scale range shall be suitable for the intended service.

15A.6 Pipe hangers and supports shall be provided and shall conform to WW-H-171, Type 1 or 6. Bronze or copper plated collars shall be provided on copper piping. Support rods for hangers shall be steel. Insulation protectors, Type 41, shall be provided on insulated piping. Rigid pipe insulation of the same thickness as adjacent pipe insulation and having a minimum compressive strength of 35 psi shall be provided between the insulation protector and the pipe. Patented pre-insulated pipe hangers and supports will be acceptable for cold water piping provided they meet all other specifications requirements. The finish of pipe hangers and supports shall be zinc or cadmium plated, except for copper piping they shall be copper plated.

15A.7 Insulation. Materials and workmanship shall be in accordance with 54Y. Insulation materials, finishes, jackets, facings, coatings and adhesives shall conform to 54Y for fire hazard ratings.

15A7.1 Piping insulation. New hot water and cold water piping above grade, horizontal roof drain piping including piping in crawl or furred spaces after being tested, shall be cleaned and insulated. Water piping in trenches and water piping in the pipe gallery and treatment gallery need not be insulated. Cold water piping and hot water piping shall be insulated with fibrous glass insulation. Fittings and valves

shall be insulated with the same material and thickness as the piping. Chromium plated supplies to fixtures need not be insulated. Fibrous glass insulation shall conform to HH-I-558, Form D, Type III, Class 12, 1/2 inch thick. Fibrous glass insulation on cold water piping shall have factory applied noncombustible vapor barrier jacket; all jacket laps shall be sealed with a vapor barrier adhesive; all butt joints shall be sealed with a strip of the same jacketing with vapor barrier adhesive; insulation not in concealed spaces shall be protected with a 7.26 ounce canvas jacket pasted on over heavy rosin sized sheathing paper in addition to vapor barrier jacket. Fibrous glass fitting covers shall be premoulded, and vapor sealed with 1/8 inch thick black vapor barrier mastic coating conforming to MIL-C-19565, Type II, except omit vapor barrier for hot piping.

15A.8 Fixtures, trimmings, fittings, accessories, and miscellaneous plumbing supplies shall conform to WW-P-541 except as specified otherwise. The finish of trimmings, fittings, and accessories shall be chromium plated brass, except as specified otherwise.

15A.8.1 Fixtures shall be provided whereindicated.

(a) Water closets shall be outfit VW16 floor mounted with Type CEB (black) seat with check hinge and stainless steel trim. Flush valve shall be type LC, pattern D.

(b) Urinals shall be outfit VU13W with wall carrier.

(c) Lavatories shall be outfit VL19H with type 18SDW supply fittings concealed cast iron arm supports, and wall carrier.

(d) Service sinks shall be outfit VS22G.

(e) Shower fixtures shall be outfit SPC with Type II shower heads with flow regulators.

(f) Drinking fountain units shall conform to 00-D-566, Type I, size 10, for wall mounting.

15A.8.2 Miscellaneous plumbing supplies shall be provided where directed.

(a) Non-freeze wall hydrants shall be Type 205.

(b) Hose bibbs shall be Type 210.

(c) Floor or shower drains shall be Type 216 with P-trap and shall have clamping rings for use with membrane waterproofing.

(d) Open sight drains shall be provided as specified for floor drains, except less strainer.

(e) Floor cleanouts shall be cast-iron with double drainage flange and weepholes, with polished bronze rim and scoriated floor plate with "C.O." cast in plate and secured to internal raised head by countersunk screw.

(f) Wall cleanouts shall be Type 212 with flanged metal cover.

(g) Cleanouts exterior of building shall be constructed of cast iron soil pipe and fittings. Fittings shall conform to WW-P-401.

Cleanout plugs shall be heavy brass, bronze or thermo-plastic with recessed removal plugs.

(h) Roof drains shall be provided and shall be cast iron with large sump, integral increaser having a length at least twice the diameter of the downspout, removable dome, and non-puncturing flashing clamps device integral with gravel stop.

15A.9 Compressed air piping shall be standard weight screw jointed zinc coated steel pipe conforming to WW-P-404 or WW-P-406. Fittings shall be zinc coated cast iron fittings conforming to WW-P-501, Class 250. Air piping shall be free from traps and shall drain. The installation shall conform to 53Y. Air piping shall have automatic trap, strainer filter, needle valve, etc.

15A.10 Quality Control. Provisions of section entitled "Contractor Quality Control" shall apply. The following tests shall be performed in addition to the tests specified in 31Y. All defects disclosed as the result of the tests shall be remedied.

15A.10.1 Hot and cold water piping shall be subjected to a hydrostatic pressure test of 100 psig for two hours.

15A.10.2 Sanitary sewer, soil, vent and drain piping. Before the installation of any fixtures, the ends of each system shall be capped and all lines filled with water to the roof and allowed to stand until a thorough inspection has been made. After the plumbing fixtures have been set and their traps filled with water, the entire system shall be subjected

to a final air pressure of not more than one inch of water column, and a smoke test. The final air and smoke test must be made in the presence of the Contractor's Quality Control representative with an approved smoke testing machine, which must show a clear passage of smoke and air throughout the entire system, and the entire system must be proven absolutely tight under such test.

15A.10.3 Compressed air piping shall be subjected to an air pressure test of not less than 1-1/2 times the working pressure for one hour.

15A.11 Disinfection. New water piping and existing water piping, affected by the Contractors operations including all valves, fixtures, fittings, and other devices connected thereto, shall be disinfected with a solution containing not less than 50 parts per million of available chlorine. The chlorinating material shall be liquid chlorine gas-water mixture, calcium hypochlorite, sodium hypochlorite, or chlorinated lime and water mixture conforming to AWWA C601 and shall be introduced into the system in an approved manner. The disinfecting solution shall be allowed to remain in the system for a minimum period of 24 hours or until the sytem is pronounced safe by the Officer in Charge. During the disinfecting period, all valves and outlets shall be opened and closed several times. Where practicable, the new system shall be isolated from the existing by closing the nearest existing gate valves before the connection is made. All new piping and accessories shall be disinfected before connection to the existing system. Existing piping shall not be cut until new piping is ready for connection. The affected existing water piping may be considered to be only that adjacent to the connection, provided extreme cleanliness and care are used and provided samples taken from the existing system, upon completion of the work, show the water to be safe for human consumption. In addition to the disinfection specified hereinbefore, the pipe and fittings used in the connection and the interior of piping adjacent to the connection shall be thoroughly cleaned and sprayed or washed in a mixture containing not less than 200 parts per million of available chlorine. After disinfection , the solution shall be flushed from the system with clean water until residual chlorine content is not greater than 0.2 parts per million or not greater than the residual chlorine content of the flushing water.

Should the samples shown contamination, the entire new system and that part of the existing system showing any contamination shall be disinfected as specified for new piping. After the system has been flushed, additional samples will be taken and tests made; if the water is found unsafe for human consumption, the disinfection procedure specified hereinbefore shall be repeated.

15A.12 Electric water heater shall be Type II, Size 40 speed heater conforming to W-H-196 with porcelain lined tank, with magnesium anode rod and 10 year warranty.

15A.13 Identification tags and plates. All equipment, gages, thermometers, valves and controllers shall be provided with tags numbered and stamped for their usage. Plates and tags shall be of brass or suitable nonferrous material and shall be securely mounted or attached.

15A.14 Drawings required of the Contractor. Before commencing any work, the Contractor shall submit for approval shop drawings and layouts of each system included in this section of the specifications. Layouts shall be based on field established conditions and interference between architectural, mechanical, electrical, and structural systems that cannot be resolved in the field shall be clearly defined. Shop drawings shall contain complete information in detail to show compliance with the specifications. The following minimum information shall be furnished for each submitted item:

(a) Reference shall be made to the paragraph or subparagraph of the specification that specified the item.

(b) The intended use shall be specifically stated.

(c) Complete physical data shall be furnished.

(d) Complete certified performance data shall be furnished to show the actual capacity of the equipment as tested.

(e) Noncomplying features and reasons for noncompliance shall be stated in detail.

(f) Partial submittals, or submittals of less than the whole of any system made up of inderdependent components will not be considered.

---oOo---

SECTION 15B AIR-CONDITIONING, HEATING AND VENTILATING

15B.1 General requirements. The work includes the provision of air-conditioning, heating and ventilating systems, and related work. Each system shall be complete and ready for operation. All materials and workmanship shall be in accordance with 16Y, 52Y, 53Y, 54Y, and NFPA 31, 70 and 90A, except as specified or indicated otherwise.

15B.2 Applicable publications. The following publications of the issues listed bleow, but referred to elsewhere by basic designation only, form a part of this specification to tht extent indicated by the references thereto (where a number is suffixed to the specification number, it denotes the effective amendment to the specification):

(a) Naval Facilities Engineering Command Specifications.

16Yf	Air conditioning and cold storage refrigeration.
34Yd	Coal tar coating systems for steel surfaces, including addendum no. 1.
52Y	Heating systems, central plant, and buildings.
53Y	Piping for power plants, heating plants and systems.
54Y	Insulation for piping, ductwork, and equipment inside buildings and plants.

(b) Federal and Military Specifications.

F-F-310a	Filters, air conditioning (replaceable type).
CC-M-636c	Motors, alternating current (fractional horsepower).
CC-M-641d	Motors, alternating current (integral horsepower).
GG-T-321d(1)	Thermometers, self-indicating, liquid in glass.
HH-I-523c	Insulation blocks and pipe covering, thermal (calcium silicate).
HH-I-558a(2)	Insulation; blocks, boards, blankets, felts, sleeving (pipe and tube covering), and pipe fitting covering; Thermal (mineral fiber, industrial type).
SS-C-466e(1)	Cloth, threaded, and tape-asbestos.
WW-H-171c(1)	Hangers, and supports, pipe.
WW-P-404c(2)	Pipe, steel (seamless and welded).
WW-P-406c	Pipe, steel (seamless and welded).
WW-P-441c(2)	Pipe, wrought-iron.

WW-P-501d	Pipe-fittings, cast-iron screwed (125 and 250 pound).
WW-P-521f	Pipe fittings, flange fittings and flanges.
WW-T-799c	Tubing, copper seamless.
WW-U-531c	Unions, pipe; steelor malleable iron, threaded connections.
WW-V-51d	Valves, bronze; angle, check and globe (125, 150 and 200 pound; screwed, flanged and solder).
WW-V-54c (1)	Valves, gate bronze (125, 150 and 200 pound; screwed, flanged and solder).'
WW-V-58a(1)	Valves, gate, cast-iron (125 and 250 pound; screwed and flanged).
WW-V-160a(1)	Valves, radiator, heating (low-pressure).
MIL-T-462B	Tanks, liquid storage, metal; fuel-oil, horizontal.
MIL-P-15280E(1)	Plastic foam, unicellular, sheet and tubular form, elastomeric.
MIL-P-16077A	Pumps, centrifugal, water-circulating, electric-motor-driven.
MIL-F-16081E	Fans, ventilating, propeller.
MIL-S-16293E	Strainers, sediment, pipeline.
MIL-G-17232B	Grilles, registers, and diffusers; metal.
MIL-U-17691A(1)	Unit heater, air circulating, steam and hot-water.
MIL-F-18032B	Fittings, pipe, butt-welding, ferrous metal.
MIL-L-18145A	Louver, metal; exhaust opening and gravity closing type.
MIL-V-18146A	Valves, pressure regulating,water.
MIL-F-18180A	Flanges and flanged fittings (150, 300, 400,600,900, 1500 and 2500 pounds).
MIL-V-18434A(1)	Valves, gate, globe and angle; steel.
MIL-V-18436B	Valves, check.
MIL-H-18551A	Heaters, convection; steam and hot-water.
MIL-T-18560A	Tanks, expansion, hot water heating system.
MIL-V-18634A	Valves; safety, relief and safety-relief.
MIL-B-18797D	Burners, oil, mechanical-draft, automatic (under 720,000 BTU/HR input capacity).
MIL-B-18897C	Boilers, heating, low-pressure.
MIL-C-19565B(1)	Coating, compounds, thermal insul-tion, vapor-barrier and weather-resistant.
MIL-A-21047B	Air conditioners, room type, 4,000 to 33,000 BTU per hour.
MIL-T-21092A	Trap, air and water, ball float (150 psi).

(c) Non-Government Specifications and Standards.

Air Moving and Conditioning Association (AMCA)

No. 210-1967	Test Code for air moving devices.

American Society of Heating, Refrigerating & Air Conditioning Engineers (ASHRAE)

1969	Equipment; guide and data book.
No. 16-61	Room air conditioners, methods of testing for ratings.

American Society of Mechanical Engineers (ASME)

1968	Boiler and pressure vessel code, including 1968 and 1969 addenda.

American Society for Testing and Materials (ASTM)

A525-67T	Zinc-coated (galvanized) iron or steel sheets, coils and cut lengths coated by the hot dip method.

National Fire Protection Association (NFPA)

No. 31-1968	Oil burning equipment.
No. 70-1968	National electrical code.
No. 90A-1969	Air Conditioning and ventilating systems.

Sheet Metal and Air Conditioning Contractors National Association (SMACCNA)

Section 1-1969	Low velocity ducts..

American National Standards Institute (ASNI/USA)

B16.18-1967	Cast-bronze solder-joint pressure fittings.
B16.22-1963	Wrought copper and bronze solder-joint pressure fittings.

15B.3 Electrical.

15B.3.1 Electric motors and controllers for equipment provided under this section shall be furnished under this section. Motors shall be of sufficient size for the duty to be performed and shall not exceed their full load nameplate current rating when driven equipment is operated at the specified capacity under the most severe conditions likely to be encountered. Fractional horsepower motors shall conform to CC-M-636 and integral horsepower motors shall conform to CC-M-641. Nameplate voltage of the motor shall be the same as as the system voltage to which it is to be connected. All motors shall operate at full capacity with a voltage variation of plus or minus 10 percent of the system nominal voltage. Dual voltage motors will not be permitted on 208 volt systems. Controllers shall conform to division entitled "Electrical".

15B.3.2 Electrical work is specified in the division entitled "Electrical", except for control wiring; motors and controllers specified to be furnished under this section shall be installed under division entitled "electrical".

15B.3.3 Control wiring shall be provided and shall conform to NFPA No. 70. The conduit shall be 1/2 inch diameter minimum. EMT conduit may be used in dry locations not enclosed in concrete or masonry.

15B.4 Ductwork shall be provided in a neat workmanlike manner. Ducts shall be constructed of zinc-coated sheet steel conforming to ASTM A525, coating class 1.25 ounces per square foot. Ducts shall be constructed, braced, reinforced and installed in accordance with NFPA 90A, SMACCNA duct manuals, and ASHRAE guide and data books. All rectangular ducts shall be cross-broken. Maximum spacing between hangers shall be 8 feet. Duct supports shall be not less than1/8 inch by 1 inch zinc-coated flat bar, except duct supports for ducts less than 18 inches may be No. 16 US gage by 1 inch zinc -coated steel. All slip joints shall be made in the direction of flow, and unless otherwise indicated, all elbows shall have a center line radius not less than 1-1/2 times the width of the duct. All ducts,unless otherwise approved, shall be true to the dimensions indicated and shall be straight and smooth on the inside with neatly finished air-tight joints. The ducts shall be securely anchored into the building construction in an approved manner and shall be completely free from vibration under all conditions of operation. All exhaust systems shall be completely balanced.

15B.4.1 Flexible duct-connectors shall be provided at all duct connections to each gasoline engine exhaust fan and ventilating fan. All connectors shall be supported at each end by metal angle frame bands, securely bolted in place as to be air-tight. Asbestos cloth connectors shall conform to SS-C-466, Form 1, Grade AAA, Style 1.

15B.4.2 Return registers shall conform to MIL-G-17232, Type II, Style C, and shall be arranged for mounting as indicated. Registers shall be of the multishutter type to provide positive control of air volume and shall have a minimum of 70 percent free area.

15B.4.3 Outside-air intake louvers are specified in sections entitled "Metal Doors and Frames" and "Metal Wall Louvers".

15B.5 Exhaust fans shall conform to MIL-F-16081. Type 1, Class 1 for direct drive, Class 2 for belt drive, Style A for wall mountings, Style B for roof mounting, except that fans shall be centrifugal type with spun aluminum housing and shall have motor completely shielded from the air stream. Provide exhaust opening and gravity closing type automatic louvers conforming to MIL-L-18145. Capacity of fans shall be certified in accordance with AMCA 210. Provide disconnect switch integral with each exhaust fan.

15B.6 Piping and fittings. All piping shall be run concealed except where indicated otherwise, all piping shall be inspected, tested and approved before being buried, covered or concealed. Dielectric connections shall be provided at all connections between ferrous and nonferrous piping or metals.

15B.6.1 Hot water piping shall be steel piping or copper tubing. Copper tubing shall be provided as specified for cold water piping. Steel piping shall be standard-weight black steel pipe conforming to WW-P-404 or WW-P-406. All nipples in screwed piping shall be extra-strong. Steel piping less than 1 inch shall have screwed fittings, and steel piping 1 inch to 2 inches shall have screwed or welded fittings; fittings shall conform to WW-P-521, Type I, steel piping 2-1/2 inches and larger shall have welded fittings conforming to MIL-F-18032. Fittings shall be of the same material and weight as the piping in which they are installed. Welding shall be in accordance with 53Y, including qualification of welders.

15B.6.2 Cold-water piping shall be copper tubing conforming to WW-T-799, Type L. Fittings shall be solder-joint cast bronze or wrought copper fittings conforming to ASNI B16.18 and B16.22 respectively; adaptors shall be provided as required. Solder shall be 95-5 tin-antimony solder for hot water piping; and 50-50 lead-tin solder for cold water piping.

15B.6.3 Flanges shall be provided at valves, strainers, equipment and disconnection points on piping 2-1/2 inches and larger. Flanges shall be welding neck type conforming to MIL-F-18180, Class 150 or Class 300, as required to match the flanges on valves or equipment.

15B.6.4 Unions shall be provided at valves, strainers, and equipment to permit easy dismantling of piping and apparatus. Each oping connection to each piece of equipment shall have a union immediately adjacent. Flanged connections shall be classed as unions. Unions screwed steel piping 2 inches and smaller shall be malleable-iron or steel screwed unions conforming to WW-U-531, Class 1, Type A, and with brass or copper seats. Unions in piping 2-1/2 inches and larger shall be flanged. Unions in copper tubing shall be 125 psig water working pressure, ground-joint-type copper or bronze.

15B.7 Valves shall conform to 53Y, except as specified otherwise. All valves 2-1/2 inches and larger shall be' flanged. All valves shall be installed with their stems horizontal or above.

15B.7.1 Gate valves 2 inches and smaller shall conform to WW-V-54, Type 1, Class A, non-rising stem. Gate valves 2-1/2 inches and larger shall conform to WW-V-58, Class 1.

15B.7.2 Globe, angle and check valves 2 inches and smaller shall conform to WW-V-51, Class A; check valves shall be type IV. Globe and angle valves 2-1/2 inches and larger shall conform to MIL-V-18434, Class 150. Check valves 2-1/2 inches and larger shall conform to MIL-V-18436, Class 150,Type III.

15B.7.3 Safety relief valves with test lever shall conform to MIL-V-18634, Class 150, and shall be suitable for the intended service.

15B.7.4 Air-venting valves shall conform to MIL-T-21092.

15B.7.5 Water pressure-regulating valves shall conform to MIL-V-18146.

15B.7.6 Balancing valves shall be brass. Valves shall be combination balancing, indicating and shut-off valve. Indicator shall be calibrated in percent opening of valve.

15B.7.7 Radiator valves shall conform to WW-V-160, service 2, modulating type with a suitable position indicator.

15B.8 Piping accessories.

15B.8.1 Pipe hangers and supports shall be provided and shall conform to WW-H-171, except as specified or indicated otherwise. All insulated piping shall have adjustable pipe hangers, Type 1 or Type 6, with insulation protectors Type 41; rigid pipe insulation of the same thickness as adjacent pipe insulation and having a minimum compressive strength of 35 psi shall be provided between the insulation protector and the pipe. Patented preinsulated type hangers or supports will be accepted for cold water piping provided they meet all other requirments specified. Bronze or copper-plated collars shall be provided on copper piping. Support rods shall be steel. The finish of pipe hangers and supports shall be zinc- or cadmium-plated, except for copper piping they shall be copper-plated; and cast-iron rollers, cases and saddles may be painted with two coats of heat resisting black paint in lieu of zinc- or cadmium-plating.

15B.8.2 Strainers shall conform to MIL-S-16293,,Class 125, Style Y.

15B.8.3 Thermometers shall conform to GG-T-321, Type I, Class 3. Scale range shall be suitable for the intended service.

15B.8.4 Pipe sleeves. Standard-weight zinc-coated steel pipe sleeves shall be provided at all piping penetrations of walls and floors. Installation shall be in accordance with 53Y with a minimum of 1-inch clearance between the piping and any woodwork or other combustible materials.

15B.8.5 Expansion tanks shall conform to MIL-T-18560, Type II, except as specified or indicated otherwise. Capacity shall be not less than that indicated. Tanks shall be ASME constructed. Each tank shall be provided with standard gage-glass, guard, shut-off cocks, 1/2-inch air connection and tank drain valve with 3/4-inch hose connection.

15B.9 Boiler. New packaged boilers shall be provided complete with all accessories and appurtenances and in operation. Each boiler shall conform to MIL-B-18897, Type I, or Type III, Class 2 for 30 psig hot-water, except as specified or indicated otherwise. Each boiler shall be mounted on a heavy structural steel base. Boiler shall be insulated with not less than a 2-inch thickness of fibrous glass insulation and provided with sheet steel casing with corrosion resistant finish on both sides. Boiler shall be suitably sized and arranged for mounting in the space indicated with adequate space allowances for operation and maintenance. Capacity of boiler shall be not less than that indicated. Production test model will not be required. Boiler shall be provided complete with integral draft fan having adequate capacity for the boiler as installed. Boiler shall have a thermal efficiency of not less than 80 percent. Use of turbulators or other devices inside the tubes will not be permitted. Automatic water feeding device for maintaining proper water level shall be provided. New smoke flues shall be provided from boiler to the stack. Boiler, breeching, burners, flue, fuel oil tanks and piping shall conform to NFPA 31 for installation and arrangement.

15B.9.1 Burners shall conform to MIL-B-18797, Type I, grade no. 2 fuel oil. Burners shall be specifically designed for the boiler furnished. Combustion controls shall be of the off-on type.

15B.9.2 Boiler breeching shall be provided as recommended by the boiler manufacturer and as indicated. Breeching and stack inside the building shall be insulated in accordance with 54Y. All materials and workmanship shall be in accordance with 52Y and 54Y. Stack shall be Underwriters' laboratories, Inc., labelled.

15B.9.3 Fuel oil tank shall be welded steel construction in accordance with NFPA 31 and shall conform to MIL-T-462, Type II, except as specified or indicated otherwise. Tank and hold-down rods shall receive protective coating system in accordance with 34Y, Type I.

15B.9.4 Fuel oil piping. Oil supply, oil return, vent and fill piping shall be standard-weight black-steel pipe conforming to WW-P-404 or WW-P-406. Fittings shall conform to WW-P-501. Underground fuel oil piping shall receive protective coating system in accordance with 34Y, Type I. Vent piping shall be provided with weatherproof vent cap. Valves shall conform to 53Y, except as specified or indicated otherwise. Valves shall be suitable for fuel oil service.

15B.10 In-line circulators shall conform to MIL-P-16077, Class 1, Service A. Manufacturer's certified pump test curves showing the characteristics of each circulator over the entire operating range shall be submitted for approval together with complete catalog data necessary to determine compliance with the specifications. Capacity of each circulator shall not be less than that indicated.

15B.11 Convectors shall conform to MIL-H-18551, Type I, Class 1, Style B, except as specified or indicated otherwise.

15B.12 Unit heaters shall conform to MIL-U-17691, Type I, and shall be provided for horizontal or vertical delivery as indicated. Controls shall be automatic of the on-off type. Thermostats shall be factory set for a maximum of 75 degrees Fahrenheit.

15B.13 Insulation. Materials and workmanship for insulating piping and equipment shall be in accordance with 54Y, except as specified otherwise. Insulation materials, finishes, jackets, facings, coatings and adhesives shall conform to 54Y for fire hazard rating.

15B.13.1 Piping insulation. New above ground piping, after being tested, cleaned and painted, shall be insulated as specified hereinafter. Fittings and valves shall be insulated with the same material and thickness as adjacent runs of pipe. When insulation is cut, the cuts shall be true and at right angles to the length of the section. Void spaces between ends of sections will not be permitted. Pipe insulation shall be continuous through wall and floor openings and pipe sleeves shall be sized accordingly. In the case of unions and flanged fittings, the pipe shall be covered first. Unions and flanges shall be covered with readily removable sections.

(a) Cold water piping shall be insulated with 1/2 inch thick fibrous glass insulation. Fibrous glass insulation shall conform to HH-I-558, Form D, Type III, Class 12, and shall have factory applied noncombustible vapor barrier jacket; all jacket laps shall be sealed with a factory applied self-sealing vapor barrier adhesive; all butt-joints shall be sealed with a self-sealing strip of the same jacketing with factory applied vapor barrier adhesive; all fittings shall be covered with premoulded insulation fitting covers

conforming to HH-I-558, Form E, Class 16; and vapor sealed with 1/8 inch black vapor barrier mastic coating conforming to MIL-C-19565, Type II.

(b) Hot water piping shall be insulated with fibrous glass insulation conforming to HH-I-558, Form D, Type III, Class 12, having a density of not less than 3 pounds per cubic foot; or with calcium silicate insulation conforming to HH-I-523, Type II, Class A, and having an insulating efficiency equal to that of the specified thickness of fibrous glass insulation. The fibrous glass insulation shall be 1-inch thick.

(c) Insulation covering. Piping insulation shall be protected by a 7.26-ounce canvas jacket pasted on over heavy rosin-sized sheathing paper; except insulation on piping in concealed, crawl or attic spaces shall receive manufacturer's standard jacket. Covering shall be finished neatly at pipe hangers and shall be terminated neatly on the ends of unions, valves, traps and strainers.

15B.14 Disinfection. New water piping shall be disinfected as specified in the section entitled "Plumbing".

15B.15 Thru-the-wall type air-conditioning units shall conform to MIL-A-21047, Type II, except as specified or indicated otherwise. Capacity of each unit shall be not less than that indicated when tested in accordance with ASHRAE 16. Each unit shall be removable from inside the building for servicing without removing the outside cabinet. Outside cabinet of the unit, including grilles and trim, shall be of all metal construction. Exterior cabinet shall be of zinc-coated or phosphate-coated steel with rust resistant primer. A metal grille shall be provided to protect the condenser coil. Air filter shall be of the replaceable type conforming to F-F-310, Type I, Grade A, UL Class 2, easily removable without the use of tools and arranged to filter both room and ventilating air. The noise level of each unit shall not exceed 60 decibels when unit is operating on the cooling cycle. Exhaust and fresh air intake shall be arranged so that they can take place simultaneously and under positive pressure for ventilation. Each unit shall be provided with a 3-wire cord of sufficient length to plug into the receptacle and shall have a 30-amp, 3-pole, 250-volt ground type plug to match receptacle.

15B.16 Adjustments. All equipment shall be adjusted so that it will perform as specified and as required to give satisfactory operation. The entire system shall be adjusted and placed in operation so that water quantities circulated will be as specified. Settings for valves, cocks, etc., shall be permanently marked so that they can be restored if disturbed at any time.

15B.17 Cleaning. All equipment, piping, strainers, ductwork, filters, etc., shall be cleaned thoroughly and in accordance with best practice.

15B.18 Special wrenches and other tools necessary for the proper repair of the equipment and systems shall be provided.

15B.19 Instructing operating personnel. Upon completion of the work and at a time designated by the Officer in Charge, the services of a competent engineer shall be provided for a period of not less than two 8 hour working days for the instruction of the Government operating personnel in the proper operation and maintenance of the equipment.

15B.20 Identification tags and plates. All equipment, gages, thermometers, valves and controllers shall be provided with tags numbered and stamped for their usage. Plates and tags shall be of brass or suitable nonferrous material and shall be securely mounted or attached.

15B.21 Tests. Upon completion and before final acceptance of the work, each system shall be tested as in service to determine compliance with the contract requirements and warranty, and in accordance with the requirements of 16Y, 52Y, and 53Y. Before insulation, each new piping system shall be hydrostatically tested at notless than 1-1/2 times the working pressure; except the fuel oil storage tank and piping system shall be tested pneumatically at 1-1/2 times the working pressure, but in no case less than 50 psig for the piping and 10 psig for the tank and shall no leakage or reduction in gage pressure after 4 hours. All equipment shall be tested in operation for a continuous period of not less than 24 hours. During the tests, all equipment shall be tested under every conditon of operation. All controls shall be tested through every cycle of operation. All safety controls shall be tested to demonstrate performance of their required function. All piping and the boiler shall be thoroughly flushed and cleaned before being placed in operation. The Government will furnish fuel, water and electricity for the tests; the Contractor shall furnish all instruments connecting devices and personnel for the tests. Any defects in the work provided by the Contractor shall be corrected by him at his own expense and the test repeated until proved satisfactory. Each system shall be completely tested for compliance with specification and all conditions thereof, and all adjusting and balancing shall be completed to the satisfaction of the Officer in Charge. A complete tabulation of measured air flow including volume and velocity at each exhaust grille shall be submitted for approval. All measurements shall be made in accordance with the manufacturer's standard methods. Adjustment of controls and balancing of distribution systems shall extend through a complete cooling and heating season after the completed systems are put in operation. Air ducts shall be tested under

operating conditions and there shall be no leakage which can be felt by applying the hand or which will cause a candle to flicker when applied to the joints or seam. The Contractor shall furnish all materials and labor to make all repairs required during one complete heating season and one complete cooling season after the systems are accepted by the Officer in Charge. The boiler shall be hydrostatically tested at a pressure of not less than two times the design working pressure before being placed in operation. The Officer in Charge (LANTDIV Boiler Inspector) shall be notified in writing when the boiler is ready for testing and before the boiler is operated. All tests shall be performed in the presence of the Contractor's Quality Control representative.

15B.22 Drawings required of the Contractor. Before commencing any work the contractor shall submit for approval shop drawings and layouts of each system included in this section of the specifications. Layouts shall be based on field established conditions; and interference between architectural, mechanical, electrical, and structural systems that connot be resolved in the field shall be clearly defined. Shop drawings shall contain complete information in detail to show compliance with the specification. The following minimum information shall be furnished for each submitted item:

(a) Reference shall be made to the paragraph or sub-paragraph of the specification that specified the item.

(b) The intended use shall be specifically stated.

(c) Complete physical data shall be furnished.

(d) Complete certified performance data shall be furnished, to show the actual capactiy of the equipment as tested.

(e) Noncomplying features and reason for noncompliance shall be stated in detail,

(f) Partial submittals or submittals of less than the whole of any system made up of interdependent components will not be considered.

15B.23 Quality Control. Provisions of the Section entitled "Contractor Quality Control" shall apply.

---oOo---

SECTION 15C PLANT PIPING AND ACCESSORIES

15C.1 General requirements. The work includes the provisions of piping, gates, valves, controllers, and other accessories complete and ready for use. All materials and workmanship shall be in accordance with 53Y except as specified otherwise.

15C.2 Applicable publications. The following publications of the issues listed below, but referred to elsewhere by basic designation only, form a part of the specifications to the extent indicated by the references thereto (where a number is suffixed to the specification number, it denotes the effective amendment of the specification).

(a) NAVFAC Specifications.

53Y Piping for power plants, heating plants and systems

(b) Federal and Military Specifications.

WW-P-404c(2) Pipe, steel, (seamless and welded, black and zinc coated (galvanized).
WW-P-406c Pipe, steel, seamless and welded for ordinary use.

WW-P-521f Pipe fittings, flange fittings and flanges
WW-V-58a(1) Valves, gage, cast iron; 125 and 250 pound, screwed and flanged (for land use).
ZZ-H-601b Hose, rubber, water (yarn reinforced).
MIL-F-18180a Flanges and flanged fittings, (150,300,400,600,900 1500 and 2500 pounds).
MIL-C-16247a Coupling, bolted for plain end pipe.
MIL-V-18436b Check valves.
MIL-V-12003c(3) Valves, plug, lubricated, and lift plug, non lubricated cast iron and steel.

(c) Non-Government specifications and standards.

American National Standards Institute (ANSI/USA)

B16.1-1967 Cast iron pipe flanges and flanged fittings, Class 125.

American Society of Testing and Materials (ASTM)

D1784-65T Polyvinylchloride (PVC) Plastic pipe
D2241-65 Polyvinylchloride (PVC) plastic pipe.

15C.3 Piping within buildings. Domestic hot and cold water piping, sanitary waste piping, roof leaders, compressed air piping, and gas piping are specified in section entitled "Plumbing".

15C.3.1 Water piping, below floor slabs 4 inch and larger shall be outside coated cement lined cast iron pipe conforming to WW-P-421, Class 150. Fittings shall be outside coated cement lined cast iron fittings conforming to ANSI specifications A21.10 with joints to match the pipe. Installation shall conform to Section entitled "Water Distribution and Raw Water Piping".

15C.3.2 Water piping, above floors 4 inch and larger shall be outside coated, cement lined flanged cast iron pipe conforming to WW-P-421 Class 150 flanged outside coated, cement lined cast iron fittings, conforming to ANSI B16.1, Class 125. Piping smaller than 4 inches shall be standard weight zinc coated steel pipe conforming to WW-P-404 or WW-P-406 with zinc coated malleable iron screwed fittings conforming to WW-P-521.

15C.3.3 Lime solution piping from the solution tanks to the pump suction shall be standard weight black steel piping conforming to WW-P-404 or WW-P-406 with black malleable iron screwed fittings conforming to WW-P-521. Lime solution piping from the pump discharge to the point of application at the softener units shall be reinforced rubber hose conforming to ZZ-H-601.

15C.3.4 Chlorine piping.

(a) Chlorine gas piping. Chlorine gas header shall be extra heavy black steel piping conforming to WW-P-404 or WW-P-406 with black screwed malleable iron fittings conforming to WW-P-521. Provide auxiliary cylinder valves, flexible tubing, chlorine gas connections from cylinders and tank manifolds with adapters for connecting to cylinders, manifolds and header. Stainless steel flexible tubing, black steel manifolds, and stainless steel adapters shall be provided by the chlorinator manufacturer and shall be suitable for use with chlorine gas.

(b) Chlorine solution piping shall be polyvinyl chloride pipe for use at 160 psi pressure and shall conform to ASTM C2241 Grade 1 PVC, with standard dimension ratio SDR26. All pipe shall bear the NSF seal for potable water. Joints shall be solvent welded type.

15C.3.5 Fluoride solution piping shall be as specified for chlorine solution piping.

15C.4 On site piping outside buildings. Storm drainage piping and sanitary waste piping are specified in Sections, entitled "Storm Drainage" and "Exterior Sanitary System". All raw water lines and distribution lines within the plant and well fences, backwash lines, effluent lines, and process waste water lines shall be cast iron pipe as specified in section entitled "Water Distribution and Raw Water Piping". Fittings, valves, and other appurtenances shall conform to Section entitled "Water Distribution and Raw Water Pipng". Fittings valves, and other appurtenances shall conform to Section entitled "Water Distribution and Raw Water Piping".

15C.5 Flanges shall be provided at valves, equipment, and disconnection points on piping 2-1/2 inches and larger and match the flanges on valves or equipment. Flanges shall be welding neck type conforming to MIL-F-18180, or screwed cast iron type conforming to ANSI B16.1.

15C.6 Unions shall be provided at valves and equipment to permit easy dismantling of piping and apparatus. Each piping connection to each piece of equipment shall have a union immediately adjacent. Flanged connections shall be classed as unions, Unions in screwed piping 2 inches and smaller shall be malleable iron or steel screwed unions with brass or copper seats. Unions in piping 2-1/2 inches and larger shall be flanged. Dielectric unions shall be provided at all connections between ferrous and nonferrous piping or metals.

15C.7 Valves shall conform to 53Y, except as specified otherwise. All interior valves 2-1/2 inches and larger shall be flanged. All valves shall be installed with their stems horizontal or above.

15C.7.1 Valves in water piping.

(a) Gate valves shall conform to WW-V-58, Class 1.

(b) Check valves shall conform to specification MIL-V-18436, Class 150.

15C.7.2 Plug valves in catalyst fill and waste piping shall be lubricated plug valves conforming to MIL-V-12003, cast iron body, 150 psig working pressure, full port.

15C.7.3 Sluice gates on the reservoir shall be cast iron bronze mounted type complete with gate, frame, guides, wedges, seat facing, operating stem, handwheel floor stand, wall thimble, and all other items necessary for a complete installation. Reservoir inlet gate shall be designed for seating pressure and reservoir drain gate shall be designed for unseating pressure. Gate, frame, guides, and wall thimble shall be cast iron. Stem and anchor bolts shall be cold rolled steel. Seat facing shall be bronze.

15C.8 Installation of all piping and appurtenances shall conform to 53Y.

15C.9 Testing and flushing. Before being concealed, all piping shall be hydrostatically tested and flushed in accordance with 53Y. All pipe, joints, valves, and fittings shall be examined. Each valve shall be fully opened and closed under pressure. All appliances and equipment for testing shall be furnished by the Contractor at his own expense. and the systems retested until proved satisfactory.

15C.10 Drawings required of the Contractor. Before commencing any work, the Contractor shall submit for approval shop drawings and layouts of each system included in this section of the specification. Layouts shall be based on field established conditions; and interference between architectural, mechanical, electrical, and structural systems that cannot be resolved in the field shall be clearly defined. Shop drawings

shall contain complete information in detail to show compliance with the specification. The following minimum information shall be furnished for each submitted item:

(a) Reference shall be made to the paragraph or subparagraphs of the specification that specified the item.

(b) The intended use shall be specifically stated.

(c) Complete physical data shall be furnished.

(d) Complete certified performance data shall be furnished to show the actual capacity of the equipment as tested.

(e) Noncomplying features and reason for noncompliance shall be stated in detail.

(f) Partial submittals or submittals of less than the whole of any system made up of interdependent components will not be considered.

15C.11 Quality Control. Provisions of Section entitled "Contractor Quality Control" shall apply.

---oOo---

SECTION 15D.WELL CONSTRUCTION

15D.1 General requirements. The work includes the provision of nine permanent gravel wall wells and related work. Wells one thru eight shall have a minimum average capacity each of 260 gallons per minute, and well ten shall have a minimum capacity of 200 gallons per minute. Each well shall be guaranteed by the Contractor to furnish a continuous supply of clear potable water, completely free of sand conforming to the limits specified hereinafter, of not less than the specified quantities for a period of one year after acceptance of the completed work. A test well shall be drilled at each location of a new well. Should thedata obtained from any test well indicate unfavorable conditions, exploration shall be continued at other locations approved by the Officer in Charge until a suitable site is located. All materials and workmanship shall conform to AWWA A100, except as specified or indicated otherwise. All exploration shall be at the expense of the Contractor.

15D.2 Applicable publications. The following publications of the issues listed below, but referred to elsewhere by basic designation only, form a part of this specification to the extent indicated by the references thereto (where a number is suffixed to the specification, it denotes the effective amendment to the specification).

(a) Federal and Military Specifications.

SS-C-192g(1) Cement, portland

(b) Non Government Specifications and Standards.

American Water Works Association (AWWA)

A100-66 Deep wells
C601-68 Disinfecting water mains

15D.3 Test Wells.

15D.3.1 The Contractor shall drill a test well at each site before construction of the permanent well is started. The test well shall be of sufficient size to obtain the necessary information required for the construction of the permanent well, but shall be not less than 6 inches. The location, size of well, and method of drilling must be approved before work is started. Test wells 1 thru 8 shall be not less than 300 feet deep and test well 10 shall be not less than 250 feet deep.

15D.3.2 The Contractor shall keep an accurate log and record of all material drilled through and the depths at which changes in formation occur.

15D.3.3 Samples of the type of material found in each stratum shall be taken by the Contractor and preserved in approved containers furnished by the Contractor. Samples shall be appropriately labeled to show depth below ground surface and thickness of the stratum from which the samples were obtained.

15D.3.4 All water bearing strata must be described in detail as to whether material is loose or compact, its color, and if gravel, whether it is water worn or angular. The presence of clay must be noted.

15D.3.5 The Contractor shall collect and have analysed samples of water from all water bearing strata encountered so as to accurately show the quality of water from each stratum. These preliminary tests shall show in P.P.M. the phenophthalein alkalinity, total alkalinity, calcium, magnesium, chorides, carbon dioxide, carbonates, sulfides, bicarbonates, iron manganese, hardness, tubidity, odor and PH.

15D.3.6 A complete electric log indicating resistivity and potential of all formations shall be furnished.

15D.3.7 Recommendation and Data Submittal. The Contractor shall make recommendations for a permanent well and shall submit all data obtained at each site. The recommendations shall include the appropriate depth, details of construction, length and location of screens, screen openings, and an estimation of the quantity of water that can be obtained from each water bearing stratum and from the completed well.

15D.3.8 Permanent well shall not be driven until all data submitted for test well has been analysed and approved by the Contractor's Quality Control representative.

15D.3.9 Test wells may be incorporated in the finished construction. Wells not used in finished construction shall be sealed as recommended in Standards for Deep Wells AWWA A-100.

15D.4 Permanent gravel wall wells.

15D.4.1 Pit casing. A hole not less than 24 inches in diameter shall be drilled to a minimum depth of 50 feet and to additional depth as necessary to terminate in an impervious stratum. A pit or surface casing 18 inches in diameter shall be installed concentrically in the hole and extending to 6 inches from the bottom. The pit casing shall be grouted in by pumping a cement slurry around the casing in such manner as to completely fill the hole and seal the casing to the wall of the formation drilled. Before pumping cement, clear water shall be pumped to the bottom

of the casing to clear the hole of slush and cuttings. The cement seal formed in the bottom of the casing shall be cut through for further drilling in a manner that will not disturb the seal.

15D.4.2 Drilling. The drilling hole shall be a minimum of 17 inches in diameter and shall extend to the bottom of the lowest water bearing formation as determined from the formation samples and the electric log. Each water bearing formation to be developed shall be under-reamed to at least 22 inches in diameter and hold open for placing of gravel after screens and inner casing has been set. All drilling shall be accomplished with proper drilling clay of the bentonite type having a weight not to exceed 9 pounds per gallon at 15 centipoise viscosity. The ph value of the drilling mud shall be maintained at 7.6 or more at all times. The drilling clay shall be of a type readily thinned with commercial mud thinners for easy removal from the walls of the wells and introduced gravel. Sufficient screens shall be provided at each formation to be developed to secure therefrom all available flow. The depth of the well and quantity of screen used shall be adequate to produce the specified guaranteed capacity. Casing and screens, as specified, shall be installed concentrically in the hole and completely enveloped by gravel and permanently sealed at the lower end. The gravel shall be pumped into place under pressure, through a temporary pipe line, extending to the bottom of the screen. The pipe line shall be raised as the gravel fills the hole, so that the lower end of the pipe is always 2 to 6 feet below the gravel level. The gravel shall entirely fill the space around the screens and casing, and equipment and methods for placing the gravel shall be approved as adequate to accomplish the result before placement is begun. When the placement of gravel is completed, the drilling clay shall be thinned and the well pumped free of all sand, mud, drillings, and other foreign matter. The gravel shall extend from the bottom to a minimum of 10 feet above the top screen. The remaining annular space around the casing shall be filled with earth in 12 inch layers and each layer thoroughly tamped.

15D.5 Tests. Upon completion of each permanent well, the Contractor shall provide a temporary pump in each well for measuring the flow and drawdown. The temporary pump shall have a capacity of not less than 500 gallons per minute. After determining the static water level in the well, the pumping shall begain at a rate of approximately 100 gallons per minute and the drawdown checked at 15 minute intervals until it stabilizes, after which pumping shall be continued at that rate for 2 hours and the water level checked at 30 minute intervals. The pumping rate shall then be increased in uniform increments not exceeding 50 gallons per minute and the described procedure repeated at each increment of increased rate until the capacity of the well is determined. The capacity of the well shall be the flow obtained at a drawdown level 10 feet above the top of the uppermost screen. After the safe maximum yield of the well has been determined, continuous 24 hour pumping test shall be conducted at that rate and the drawdown checked at hourly intervals. The Contractor shall provide necessary pipe and ditches to take the water away from each well site.

A complete written log of the test showing static water level, pumping rate and drawdown at the specified intervals shall be furnished. At the end of the 24 hour test, water samples shall be taken and tested by an approved testing laboratory for complete chemical and bacteriological analysis. Additional samples shall be furnished in suitable containers.

15D.6 Materials.

15D.6.1 Casings. The outer pit casing 18 inch nominal diameter shall be black steel pipe, 0.438 inch wall thickness. All other casings shall be seamless zinc-coated steel pipe conforming to WW-P-406, shall be not less than 10 inches diameter, not less than 0.365 inch wall thickness. All joints shall be either threaded or coupled, with heavy recessed type couplings in which the ends of the pipe shall butt, or they may be field welded.

15D.6.2 Well screen. Shall have an inside diameter of not less than 10 inches and be of not less than 6 gauge material, and shall be of corrosion resistant (stainless) steel type 304, with continuous slot openings of proper size and design to hold back and support the gravel used in the gravel envelope around the screens. Joints shall be made with heavy butt type couplings of the same materials, or by welding. Length shall be as required to provide the amount of water specified. Water velocity thru the slots shall not exceed 0.20 feet per second.

15D.6.3 All gravel used for the gravel envelope around screens shall be round, hard, water worn, gravel of proper gradation that will allow free flow of water in the well and positively prevent the infiltration of sand. It shall be of siliceous material, reasonably smooth and round, and shall be free of mat or elongated pieces of well as of dirt, vegetable matter, or other foreign material. The gravel shall be thoroughly sterilized with hypochlorite before being placed.

15D.6.4 Cement grout for sealing the space between the casing and the drilled hole, shall be composed of portland cement, type 1, conforming to SS-C-192, and water. The mixed grout shall weigh not less than 14 pounds per gallon.

15D.7 Air lines. Each well shall be provided with an air line. The pipe shall be 1/2 inch copper tubing conforming to WW-T-799, Type K, with solder joint wrought copper fittings. Air line shall extend a minimum of 10 feet below the drawdown level.

15D.8 Disinfecting. The well shall be disinfected by adding chlorine or hypochlorine solution in accordance with AWWA A100 and C 601. Sufficient chlorine or solution to give the water a chlorine content of 50 P.P.M. shall be fed into the water continuously during the gravel placing operation. After disinfection the solution shall be flushed from the well with clean water until residual chlorine content is not greater than 0.2 ppm or not greater than the residual chlorine content of the

flushing water.

15D.9 Production Guarantee. It is the intent of this section of the specifications to provide a well field of eight wells serving the new treatment plant and two wells serving the existing treatment plant. Each well serving the new plant is specified to have a capacity of 260 gpm. It is acknowledged, however, that the capacity of each completed well will vary, and a well field having an average capacity of 260 gpm per well will be acceptable, provided no single well is rated higher than 400 gpm. Each of the two wells serving the existing plant is specified to have a capacity of 200 gpm. Two wells having an average capacity of 200 gpm each will be acceptable, provided neither well is rated higher than 300 gpm.

15D.10 Quality Control. Provisions of the section entitled "Contractor Quality Control" shall apply.

15D.10. Tests: All tests to determine conformance with the specified requirements shall be performed by the Contractor's quality control organization.

15D.10.2 Materials, tests and test reports. The testing requirements incorporated in referenced documents for materials will be waived, provided certified copies of reports of tests from approved laboratories performed on previously manufactured materials are submitted and approved. Test reports shall be accompanied by notarized certificates from the manufacturer certifying that the previously tested material is of the same type, quality, and manufacture as that furnished for the project.

---o0o---

SECTION 15E. WATER DISTRIBUTION AND RAW WATER PIPING

15E.1 General requirements. The work includes the provision of raw water lines, water distribution piping and realted work. All piping shall beinspected tested and approved before being buried, covered or concealed. All materials and workmanship shall be in accordance with 13Y, 42Y, 55Y, NFPA No. 24, and American Water Works Association, except as specified or indicated otherwise.

15E.2 Applicable publications. The following publications of the issues listed below, but referred to elsewhere by basic designation only, form a part of this specification to the extent indicated by the references thereto (where a number is suffixed to the specification number, it denotes the effective amendment to the specification).

(a) Bureau of Yards and Docks/NAVFAC Specifications.

13Yh	Concrete construction, including Addendum No. 1.
42Yc	Drainage, sanitary electrical and water service appurtenances.
55Y	Water Distribution System, piping and appurtenances.

(b) Federal and Military Specifications

QQ-C-40	Calking, lead wool and lead pig.
WW-P-404c(2)	Pipe, steel (seamless and welded, black and zinc coated (galvanized)
WW-P-406c	Pipe, steel, (seamless and welded).
WW-P-421c	Pipe, cast iron, pressure
WW-V-51d	Valves, bronze; angle, check and globe (125, 150 and 200 pound; screwed, flanged and solder).
WW-V-54d(1)	Valves, gate, bronze (125, 150, and 200 pound, screwed, and flanged and solder).
WW-V-58a(1)	Valves, gate, cast iron (125 and 250 pound; screwed and flanged).

(c) Non Government Specifications and Standards.

American Water Works Association (AWWA)

C400-65	Asbestos cement water pipe.
C500-61	Gate valves for ordinary water works service.
C502-64	Fire hydrants for ordinary water works service.
C600-64	Installation of cast iron water mains
C601-68	Disinfecting water mains
C603-65	Installation of asbestos cement water

National Fire Protection Association (NFPA)

No. 24-1969 Outside protection.

American National Standards Institute (ANSI/USA)

A21.10-1964 Cast iron fitting, 2 inch through 48 inch, for water and other liquids.

A21.11-1964 Rubber gaskets joints for cast iron pressure pipe and fittings.
B16.1-1967 Cast iron pipe flanges and flanged fittings.
B16.18-1967 Cast bronze solder joint pressure fittings.
B16.22-1963 Wrought copper and bronze solder joint pressure fittings.

15E.3 Water distribution and raw water piping shall be of the types and materials for pipe sizes specified herein and shall be of new and unused materia. The full length of each section of pipe shall rest solidly upon the pipe bed with recessès excavated to accommodate the bells and joints. Any pipe that has the grade or joint disturbed after laying shall be taken up and relaid. The interior of the pipe shall be thoroughly cleaned of all foreign matter before being laid in the trench and shall be kept clean during laying operations by means of plugs or other approved methods. When work is not in progress, open ends of pipe and fittings shall be securely closed so that no trench water or other foreign substance will enter the pipes of fittings. All 1/16 and sharper bends, tees, and dead ends of pipe shall be securely blocked in the direction of flow with poured in place concrete bearing solidly against the pipe and affording a minimum of 5 square feet for 6 inch pipe, 6 square feet for 8 inch pipe, 9 square feet for 10 inch pipe, 12 square feet for 12 inch pipe, 17 square feet for 14 inch pipe, 20 square feet for 16 inch pipe, and 30 square feet for 24 inch pipe, unless other blocking is indicated. Water piping 4 inches and larger shall be cast iron piping or asbestos cement piping.Dielectric unions shall be provided at all connections between ferrous and nonferrous piping or metals. All pipe shall be inspected in the sling before lowering into the trench. Cast iron pipe shall be tapped with a light hammer to detect cracks. Defective, damaged or unsound pipe shall be rejected. The depth of cover shall be not less than 3 feet, except where shown otherwise.

15E.3.1 Cast iron piping shall be outside coated, cement lined, cast iron pipe conforming to WW-P-421, Class 150. Fittings shall be outside coated, cement lined, cast iron fittings confroming to ANSI A21.10 with joints to match the pipe. Adapters shall be provided for connection of pipe and fittings to flanged accessories. The gaskets shall be furnished with the piping and shall be as recommended by the piping manufacturer.

(a) Installation shall be in accordance with AWWA specification C600, except as specified otherwise. Deflections from a straight line or grade, as required by vertical or horizontal curves or offsets, shall not exceed 6/D inches per lineal foot of pipe, where D is the nominal diameter of the pipe in inches, between the center lines extended

of any 2 connecting pipes. If the alignment requires deflections in excess of that limitation, the Contractor shall provide special bends or a sufficient number of shorter lengths of pipe to conform to the limitation specified. Except where necessary in making connections with other lines, pipe shall be laid with the bells facing in the direction of the laying. Except at enclosures no less than two lengths of pipe shall be in position ahead of each joint, with packing installed and earth fill tamped alongside the pipe, before the joint is poured. Where cutting of pipe is necessary, it shall be done with approved mechanical cutters in a manner that will not damage the pipe. Where coatings are damaged, they shall be touched up with material similar to that used for the original coating. All bolts, nuts and exposed threads shall be coated with asphalt varnish after installation.

(b) Joints.

(1) Leaded joints. Before jointing, all lumps, blisters, and excess coating material shall be removed from the bell and spigot ends of the pipe. All oil or grease shall be removed. The outside of the spigot and inside of the bell shall be wire brushed and wiped clean and dry. Spigots shall be adjusted in the bells so as to give uniform space all around, and if any pipe does not allow sufficient space for proper caulking, it shall be replaced with one of proper dimensions. Adjacent lengths of pipe shall be adjusted with reference to each; blocking or wedging between bell and spigot will not be permitted. Molded or tubular rubber, asbestos, or especially prepared paper rings treated to prevent deterioration or support of bacteria shall be used as gaskets. The gaskets shall be driven or caulked tightly into the annular spaces between the pipes and shall be of proper size to seal the joint tightly and leave sufficient space for lead as specified. Where rubber rings are used as gaskets, a braded or twisted hemp or jute ring shall be caulked into the joint after the rubber ring is placed to prevent contact of the molten lead with the rubber. Gaskets shall not project into the bore of the finished joint. When the joints are approved for pouring, the joints shall be cleaned and remaining space filled at one pouring with lead which shall be caulked in a manner that will assure tight joints without overstraining the bells. The depth of lead shall be not less than 1-3/4 inches measured from the face of the bell. After caulking, the lead shall be practically flush with the face of the bells. The lead shall conform to QQ-C-40.

(2) Push on joints. The use of push on rubber gasket joints designed to lock the gasket against displacement without caulking will not be permitted on piping buried in the ground under the building. Push on rubber gasket joints for pipe and fittings shall conform to ANSI A 21.11.

(3) Mechanical joints. The jointing shall be in accordance with the recommendations of the manufacturer of the joint except as specified otherwise. Mechanical joints for pipe and fittings shall conform to ANSI A21.11.

(4) Flanged joints shall be in accordance with the recommendations of the pipe manufacturer. Drilling, bolts, and gaskets shall be standard for the flange; flanges shall conform to ANSI B16.1 Class 125.

15E.3.2 Asbestos cement piping and couplings shall conform to AWWA C400, Class 150, Fittings shall be outside coated, cement lined, cast iron fittings confroming to ANSI A21.10. Adapters shall be provided as recommended by the pipe manufacturer for connection of asbestos cement pipe to flanged accessories.

(a) Installation shall be in accordance with AWWA C603. Bedding shall be in accordance with 42Y. Asbestos cement pipe, couplings and fittings shall be handled and installed in accordance with the recommendations of the pipe manufacturer.

(b) Joints. Asbestos cement pipe shall be joined in accordance with the recommendations of the manufacturer. Connections between asbestos cement pipe and cast iron fittings shall be leaded joints or mechanical joints as specified for cast iron pipe.

15E.4 Valves.

15E.4.1 Valves larger than 3 inches. Gate valves shall be of the double disc type with non rising stems conforming to AWWA C500. Stems shall have nuts similar to those on valves of the existing system. Gate valves shall be of one make and shall open by a counterclockwise rotation of the valve stem. Check valves shall be the swing check type, designed for 150 psig working pressure with a suitable opening for cleaning without disconnecting from the pipe; the valves shall have bronze or cast iron body, with brass or bronze trim including pin, seat ring and disc face. Valves larger than 14 inches shall be provided with gearing and by-pass valves.

15E.4.2 Valves 3 inches and smaller. Gate valves 2 inches and smaller shall conform to WW-V-54, Class B. Gate valve 2-1/2 inches and 3 inches shall conform to WW-V-58, Class 1, with non rising stem. Angle check and globe valves shall conform to WW-V-51, Class B, check valves shall be Type IV.

15E.4.3 Air release valves shall be designed to release large quantities of air during start up or pipe filling period, and exhaust small

quantities of air during operation. Valves shall be float operated and shall have a large orifice with a minimum venting capacity of 840 CFM of free air at 5 psig for start up, and a small orifice with a minimum venting capacity of 22 cfm of free air at 300 psig for normal operation. Valves shall have cast iron bodies and covers, stainless steel floats, bronze, trim, and Buna-N-seats. Bodies shall be rated at 300 psig maximum working pressure.

15E.5 Roadway boxes. Each valve on underground piping shall be provided with an adjustable cast iron roadway box of a size suitable for the valve on which it is used. The head shall be round and shall have the word "water" cast upon it. The least diameter of the shafts of the boxes shall be 5.25 inches. Boxes shall be given a heavy coat of bituminous paint.

15E.6 Hydrants shall conform to AWWA C 502 and NFPA. Hydrants shall be post type. They shall be 6 inches in diameter with 5 inch clear opening through the valves and shall be provided with a 4.5 inch pumper connection and two 2.5 inch hose connections. Hydrants shall be the frost proof and nonflooding type which will not flood in the hydrant when the valve is closed, and can be repaired without digging. A safety flange shall be provided for post type hydrants so that the barrel will not break if struck by a vehicle or other object. The hydrants shall be desinged for 150 psig working pressure and 300 psig hydrostatic test pressure, and shall open counterclockwise, All working parts shall be bronze. Hose and pumper connection threads and operating nut shall be National Standard, and shall conform to those existing on the station. Each hydrant shall be preceded in the line by a 6 inch gate valve.

15E.7 Setting hydrants, valves and valve boxes. Valves, hydrants, and valve boxes shall be set plumb, and centered, with valve boxes placed directly over the valves. Valve boxes shall, if possible, be located outside the area of the roads and streets. Earth fill shall be carefully tamped around the valve box to a distance of 4 feet on all sides of the box, or to the undisturbed trench face if less than 4 feet. Valves and hydrants shall have the interiors cleaned of all foreign matter before installation. Stuffing boxes shall be tightened and the hydrant or valve shall be inspected in opened and closed positions to see that all parts are in working condition. Post type hydrants shall be set with the invert of the pumper connection 18 inches above the grade. The connecting pipe will have the same depth cover as the distributing mains. The hydrant shall be set upon a slab of stone or concrete not less than 4 inches thick and 15 inches square. The back of the hydrant, opposite the pipe connection, shall be firmly blocked against the vertical face of the trench with poured in place concrete to prevent the hydrant from blowing off the line. If the character of the soil is such that the hydrant cannot be securely blocked, bridle rods and rod collars shall be used. Bridle rods and rod collars shall be not less than 3/4 inch

stock and shall be protected by a coat of bituminous paint. Not less than 7 cubic feet of broken stone shall be placed around the base of the hydrant to insure drainage. The backfill around hydrants shall be thoroughly compacted to the grade line.

15E.9 Testing and flushing. Before being covered, the completed piping shall be hydrostatically tested at 200 psig for 2 hours, and flushed in accordance with NFPA 24. All pipe, joints, valves and fittings in the test section shall be examined. All equipment shall be tested in operation to demonstrate compliance with specification requirements. Each hydrant and all control valves shall be fully opened and closed under water pressure. All appliances and equipment for testing shall be furnished by the Contractor at his own expense, and the sytems retested until proven satisfactory. The Contractor shall submit to the Contractor's Quality Control representative a certificate similar to that specified in NFPA 24 with a request for a formal inspection at least two working days prior to the date the inspection is to take place. At this Inspection, any or all of the required tests shall be repeated as directed.

15E.10 Disinfection. New water piping and existing water piping affected by the Contractor's operations including all valves, hydrants, fixtures, fittings, and other devices connected thereto, shall be disinfected with a solution containing not less than 50 parts per million of available chlorine. The chlorinating material shall be liquid chlorine gas water mixture, calcium hypochlorite, sodium hypochlorite, or chlorinated lime and water mixture conforming to AWWA C601 and shall be introduced into the system in an approved manner. The disinfecting solution shall be allowed to remain in the system for a minimum period of 24 hours or until the system is pronounced safe. During the disinfecting period all valves and outlets shall be opened and closed several times. Where practicable, the new system shall be isolated from the existing by closing the nearest existing gate valve before the connection is made. All new piping and accessories shall be disinfected before connection to the existing system. Existing piping shall not be cut until new piping is ready for connection. The affected existing water piping may be considered to be only that adjacent to the connection, provided extreme cleanliness and care are used and provided samples taken from the existing system, upon completion of the work, show the water to be safe for human consumption. In addition to the disinfection specified hereinbefore, the pipe and fittings used in the connection and the interior of piping adjacent to the connection shall be thoroughly cleaned and sprayed or washed in a mixture containing not less than 200 parts per million of available chlorine. After disinfection the solution shall be flushed from the system with clean water until residual chlorine content is not greater than 0.2 parts per million or not greater than the residual chlorine content of the flushing water. Should the samples show contamination, the entire system and that part of the existing system showing any contamination shall be disinfected as specified for new piping. After the system has been flushed,

additional samples will be taken and tests made; if the water is found unsafe for human consumption, the disinfection procedure specified hereinbefore shall be repeated.

15E.11 Identification rags and plates. All meters and valves shall be provided with tags numbered and stamped for their usage. Plates and tags shall be of brass or suitable nonferrous material and shall be securely mounted or attached.

15E.12 Connections to existing water supply systems. Tapping or drilling machine valve and sleeves shall be used for connections to be made under pressure. The sleeves shall be bolted around the mains and caulked; the valve bolted to the branch. The valve shall conform to the latest specification for valves of the American Water Works Association. The valve shall be opened, the drilling machine attached; the tap made, the valve closed and the drilling machine removed all without interruption of service.

15E.13 Piping under railroads shall be provided in accordance with the American Railway Engineering Association "Manual of Recommended Practice", Chapter 1, Part 5, for non-flammable substances. Piping shall be encased in steel pipe of size, length, and thickness indicated. Piping under existing railroads shall be bored or jacked in place. Piping under new railroads may be installed by open cut if the pipe is installed prior to construction of the railroad.

15E.14 Quality Control. Provisions of the section entitled "Contractor Quality Control" shall apply.

15E.14.1 Tests: All tests to determine conformance with the specified requirements shall be performed by the Contractor's quality control organization.

15E.14.2 Materials, tests and test reports. The testing requirements incorporated in referenced documents for materials will be waived, provided certified copies of reports of tests from approved laboratories performed on previously manufactured materials are submitted and approved. Test reports shall be accompanied by notarized certificates from the manufacturer certifying that the previously tested material is of the same type, quality, and manufacture as that furnished for the project.

---o0o---

SECTION 15F EXTERIOR SANITARY SEWERS

15F.1 General requirements. The work includes the provision of exterior sanitary sewer piping and related work. The system shall be complete and ready for operation. All piping shall be inspected, tested and approved before being buried, covered or concealed. All materials and workmanship shall be in accordance with specification 13Y, 42Y, and 56Y, except as specified or indicated otherwise. All pipe shall be inspected in the sling and approved before lowering into the trench. Defective, damaged or unsound pipe shall be rejected. Except where necessary in making connections with other piping, the pipe shall be laid with the bells facing in the direction of the laying. Where cutting of the pipe is necessary, it shall be done with approved mechanical cutters in a manner that will not damage the pipe. The full length of each section of pipe shall rest solidly upon the pipe bed with recesses excavated to accommodate the bells and joints. Any pipe that has the grade or joint disturbed after laying shall be taken up and relaid. The interior of the pipe shall be thoroughly cleaned of all foreign matter before being laid in the trench and shall be kept clean during laying operations by means of plugs or other approved methods. When work is not in progress, open ends of pipe and fittings shall be securely closed so that no trench water or other foreign substance will enter the pipes of fittings.

15F.2 Applicable publications. The following publications of the issues listed below, but referred to elsewhere by basic designation only, form a part of this specification to the extent indicated by the references thereto (where a number is suffixed to the specification number, it denotes the effective amendment to the specification):

(a) Bureau of Yards and Docks/NAVFAC Specifications.

13Yh	Concrete construction, including addendum No. 1.
42Yc	Drainage, sanitary, electrical and water service appurtenances.
56Y	Exterior Sanitary Sewer and drainage system piping.

(b) Federal and Military Specifications.

QQ-C-40	Calking; lead wool and lead pig.
WW-P-401d	Pipe and pipe fittings; cast iron. soil.

(c) Non Government Specifications and Standards.

American Society for Testing and Materials (ASTM)

C564-68T	Rubber gasket for cast iron soil pipe and fittings.

Cast Iron Soil pipe Institute (CISPI)

No. 301-69 Hubless cast iron sanitary system.

15F.3 Exterior sanitary piping.

15F.3.1 Sanitary sewer piping from the building to the sewage pumping station shall be coated service weight cast iron bell and spigot pipe and fittings conforming to WW-P-401, Class SV.

15F.3.2 Hubless cast iron piping. In lieu of service weight cast iron bell and spigot pipe specified hereinbefore the Contractor may use hubless cast iron piping and fittings for pipe sizes 1-1/2 inches thru 6 inches. The hubless joint shall be of the coupling type and shall consist of two pipe or fitting spigot ends, a sealing sleeve, and a shield and clamp assembly. The sealing sleeve shall consist of a double seal compression type molded neoprene gasket. The shield and clamp assembly shall consist of a stainless steel corrugated shield, two stainless steel bands, and two stainless tightening devices. Each tightening device housing shall interlock with a band at the unslotted end. The bands shall be fused to the shield by spot welding, riveting or such other method that will insure that the bands will not become separated from the shield. The sealing sleeve and the shield and clamp assembly shall be of the same length. The hubless cast iron sanitary system including installation shall conform to Cast Iron Soil Pipe Institute Standard No. 301.

15F.3.3 Sanitary force main piping shall be provided as specified for water distribution piping in the section entitled "Water Distribution and Raw Water Piping".

15F.4 Pipe joints.

15F.4.1 Leaded joints in cast iron pipe. Before jointing, all lumps, blisters, and excess coating material shall be removed from the bell and spigot ends of the pipe. All oil or grease shall be removed. The outside of the spigot and inside of the bell shall be wire brushed and wiped clean and dry. Spigots shall be adjusted in the bells so as to give uniform space all around; if any pipe does not allow sufficient space for proper calking, it shall be replaced with one of proper dimensions. Adjacent lengths of pipe shall be adjusted with reference to each; blocking or wedging between hub and spigot will not be permitted. Molded or tubular rubber, asbestos, or especially prepared paper rings treated to prevent deterioration or support of bacteria shall be used as gaskets, except gaskets in sanitary piping may be braided or twisted hemp or oakum gaskets of the best commercial grade. The gaskets shall be driven or calked tightly

into the annual spaces between the pipe and shall be of proper size to seal the joint tightly and leave sufficient space for lead as specified. Where rubber rings are used as gaskets, a braided or twisted hemp or jute ring shall be calked into the joint after the rubber ring is palced to prevent contact of the molten lead with the rubber. Gaskets shall not project into the bore of the finished joints. When the joints are approved for pouring, the joints shall be cleaned and the remaining space filled at one pouring with lead which shall be calked in a manner that will assure tight joints without overstraining the bells. The depth of lead shall be not less than 1-3/4 inches measured from the face of the bell. After calking, the lead shall be practically flush with the face of the bells. The lead shall conform to QQ-C-40.

15F.4.2 Push on joints. The use of push on rubber gasket joints designed to lock the gasket against displacement without calking will be permitted on piping buried in the ground not under the building. Push on joints for cast iron pipe and fittings shall conform to ASTM specification C564. The piping shall be as specified hereinbefore, except for dimensional modifications to the bell and the spigot end to suit the gasket. The gasket shall be furnished with the pipe and shall be the same class as the pipe in which it is installed.

15F.5 Trenching and backfilling shall be provided in accordance with 42Y and as specified in section entitled "Earthwork"

15F.6 Batterboards shall be provided spaced not more than 25 feet apart along trenches for checking the installation of piping to insure proper slope and elevation.

15F.7 Cleanouts. Shall be constructed of cast iron soil pipe and fittings. Fittings shall conform to WW-P-401. Cleanouts plugs shall be heavy brass, bronze or thermo plastic with recessed removal plug.

15F.8 Sewage pumping units shall be provided and shall conform to MIL-P-21251 and shall be capable of passing 2-1/2 inches sphere size without clogging.

15F.9 Connections to existing sanitary- systems. The Contractor shall furnish all material and labor required to make connections into the existing sanitary systems; and shall perform all necessary excavating, backfilling and other labor as required. The Officer in Charge shall be notified in writing at least five days prior to the date of the connections are required. Approval by the Officer in Charge shall be received before any service is interrupted.

15F.10 Quality Control. Provisions of section entitled "Contractor Quality Control" shall apply.

15F.10.1 Quality assurance provisions shall be in accordance with 56Y; leakage test is not required.

15F.10.2 Materials, tests and test reports. The testing requirements incorporated in referenced documents for materials will be waived, provided certified copies of reports of tests from approved laboratories performed on previously manufactured materials are submitted and approved. Test reports shall be accompanied by notarized certificates from the manufacturer certifying that the previously tested material is of the same type, quality, and manufacture as that furnished for the project.

---o0o---

SECTION 15G. GASOLINE ENGINE DRIVEN ELECTRIC GENERATORS

15G.1 General requirements. The work includes the provision of gasoline-engine-driven electric generator sets; and the provision of fuel systems, and related work required to provide each engine driven electric generator set complete and in operation. Each system shall be complete and in operation. All piping shall be inspected, tested and approved before being buried, covered or concealed. All materials and workmanship shall be in accordance with 9Y, 53Y, and NFPA 30, 37, and 70, except as specified or indicated otherwise.

15G.2 Applicable publications. The following publications of the issues listed below, but referred to elsewhere by basic designation only, form a part of this specification to the extent indicated by the references thereto (where a number is suffixed to the specifications number, it denotes the effective amendment to the specifications):

(a) Bureau of Yards and Docks / NAVFAC Specifications.

9Yi	Electrical apparatus, distributing systems, and wiring; including erratum No. 1
34Yd	Coal tar coatings for steel surfaces, including Addendum No. 1
53Y	Piping for power plants, heating plants and systems.

(b) Federal and Military Specifications.

HH-1-523c d	Insulation block, pipie covering, and cement, thermal, calcium silicate (for temperatures up to 1200 degrees Fahrenheit)
SS-C-466e(1)	Cloth, thread and tape-asbestos.
WW-H-171c(1)	Hangers and supports, pipe.
WW-P-404c(2)	Pipe, steel (seamless and welded, black and zinc-coated (galvanized)
WW-P-406c	Pipe, steel, seamless and welded.
WW-P-521f	Pipe fittings, flanged fittings and flanges.
WW-T-799c	Tubing, copper, seamless.
MIL-T-462B	Tanks, liquid storage, metal, fuel-oil, horizontal.

MIL-F-18032B	Fittings, pipe, butt welding, ferrous metal.
MIL-V-18436B	Valves, check.
WW-V-54c	Valve, gate, bronze (125, 150 and 200 pounds screwed, flanged, soldered-end for land use).
MIL-G-19826C	Generator sets, diesel engine, alternating current, for public works construction, 10KW through 200 KW.

(c) Non-Government Specifications and Standards.

Institute of Electrical and Electronics Engineers (IEEE)

No. 126-1959	Speed governing of internal combustion engine-generator units.

American National Standards Institute (ANSI)

B16.1-1967	Cast iron pipe flanges and flanged fittings, Class 125.

National Fire Protection Association (NFPA)

No. 30-1969	Flammable liquids code
No. 37-1967	Combustion Engines
No. 70-1968	National Electrical Code
No. 90A-1969	Air Conditioning and Ventilating Systems

American Society for Testing and Materials (ASTM)

A525-67T	General requirements for delivery of zinc-coated (galvanized) iron or steel sheets, coils, and cut lengths coated by the hot-dip method.

15G.3 Gasoline generator set. The gasoline engine driven electric generating sets shall conform to specification MIL-C-19826, type I, except as specified or indicated otherwise. Auxiliary equipment for the sets shall include electric cranking systems, storage batteries, battery chargers, tachometers, pyrometers, voltage regulators, field discharge resistors, rotating exciters, manual voltage controls, automatic and manual power transfer switches and accessories. Vibration isolation devices standard with the manufacturer shall be provided that will effectively eliminate excessive vibration. Radiator fans shall be the outward blow (forced) type. Starting of the gasoline engine driven generator sets shall be by push button from a battery power source. A suitable arrangement of electrical contacts shall be provided so that operation of the engine shut-down control will automatically trip the generator circuit breaker. Lifting attachments and tie-down devices shall be provided. Radio interference suppression shall be provided. The gasoline engine driven generator sets shall be the standard products of a manu-

(e) Phase switch for ammeter
(f) Volt meter
(g) Ammeter
(h) Frequency meter
(i) Battery circuit ammeter
(j) Engine starter switch
(k) Vernier throttle control

15G.3.6 Engine cranking battery shall be as specified in MIL-G-19826, except as modified herein. The batteries shall be of sufficient capacity to provide 10 successive starting attempts of 30 seconds each within a 2 minute rest between each discharge, at a temperature of 32 degrees Fahrenheit, but not less than 150 ampere hours at the 8 hour rate.

15G.3.7 Spare parts and special tools. Spare parts regularly furnished and a complete set of special tools necessary to service the engines and generators shall be furnished. A suitable tool chest shall be provided for the tools and lockers shall be provided for spare parts. The following spare parts shall be furnished for each generator set.

1 Exhaust valve inner spring
1 Exhaust valve outer spring
1 Exhaust valve retainer
2 Exhaust valve retainer wedges
1 Exhaust valve
2 Cylinder head gasket groups
1 Complete set of gaskets
1 Complete set of connecting rod bearings
1 Complete set of piston rings
1 Complete set of brushes for generator

15G.3.8 Painting. The gasoline engine generating sets including accessories which form integral parts thereof, oil and fuel filters or strainers, air intake filters, housings, and exhaust silencers shall be painted at the factory in accordance with MIL-G-19826.

15G.4 Gasoline storage tanks Shall conform to MIL-T 462 and shall have the capacities as indicated. The tanks shall be of welded steel construction and shall be installed in accordance with NFPA 30, and shall be approved and labeled by the Underwriters' Laboratories, Inc. The tanks shall be provided with reinforced threaded openings or flanges for all pipe connections. Provide a structural steel tank stand for each tank.

15G.5 Gasoline pipe and fittings. Piping shall be standard weight black steel pipe conforming to WW-P-404 or WW-P-406 with standard weight malleable iron fittings conforming to WW-P-521. Vent piping shall be provided withweatherproof vent caps. Flexible connections shall be provided for fuel lines at the engine. Connections shall be corrugated seamless bronze wire braid. Check valves shall conform to the MIL-V-18436

facturer regularly engaged in the production of such equipment. Items performing the same function shall be products of the same manufacturer.

15G.3.1 Ratings. The electric generating units shall be rated for emergency duty, three phase, four wire, alternating current service at 0.8 power factor lagging, and 60 cycles per second. Voltage and capacity of the unit shall be as indicated.

15G.3.2 Speed Governing Systems. The speed governing systems shall conform to IEEE 126, Sections 1-IV,as specified and as modified herein. The governing systems shall be capable of controlling with stability the rotative speed of the diesel generator sets at all power outputs between zero and 110 percent of rated outputs when operating independently. The governors shall be of the hydraulic, mechanical, or electric type. The governors shall be isochronous. The governor characteristics shall be for general utility service. The governors shall be equipped for electric load sensing.

15G.3.3 Generators. Insulation shall be Class B. Voltage regulators shall be provided and designed for individual crosscurrent compensation; and shall maintain generator voltage within plus or minus 2 percent. Field discharge resistors rotating exciters, and manual voltage controls shall be provided.

15G.3.4 Electric starting equipment and engine controls. The starting equipment for the gasoline engine driven generator sets shall include storage batteries, battery operated electric starting motors, battery charging generators, full wave dry disc type trickle chargers, manual starting switches, and all other appurtenances and mechanisms necessary for start-stop operation of the electric generating units from the battery power sources, and other auxiliary control equipment necessary for the manual transfer as noted of power from the normal line power source to the emergency gasoline electric power source. When the normal power source fails, the generating units where noted, shall be capable of assuming full load automatically within 8 seconds. In event the generator unit fails to start after approximately 20 seconds, the starting circuit shall be opened automatically by a manual-reset-type thermal cutout.

15G.3.5 Engine and generator control panels. The instruments panels shall be as specified in MIL-G-19826 except as modified herein. Air pressure gage is not required. The following additional instruments will be provided and mounted on the control panels.

(a) Automatic voltage regulator
(b) Voltage regulator switch
(c) Field switch
(d) Manual field rheostat control

Type 1. Gate valves shall conform to WW-V-54.

15G.6 Engine exhaust piping and fittings. Exhaust piping shall be black steel pipe conforming to WW-P-406. Cast iron, long radius, flanged fittings conforming to ANSI shall be provided for final connections to the diesel engines and exhaust mufflers. Changes in direction shall be made with long radius welding fittings of the same material and weight as the piping in which they are installed and shall conform to MIL-F-18032. Welding shall be in accordance with 53Y, including qualification of welders. Gaskets for flanged connections shall be 1/16 inch thick asbestos packing.

15G.7 Insulation. Exhaust piping shall be insulated inside the buildings with 2 inch thickness of calcium silicate insulation conforming to HH-I-523. Insulation shall be protected by a 0.016 inch thick aluminum jacket with a factory applied moisture barrier and secured by aluminum straps or screws spaced 8 inches on centers.

15G.8 Pipe hangers and supports shall be provided and shall conform to WW-H-171. Exhaust piping shall have adjustable pipe hangers, Type 1 or Type 6, with insulation protector, Type 41, with adjustable pipe hangers. Support rods may be steel. Isolation supports shall be provided for all piping connections to the gasoline generator sets. The finish of pipe hangers and supports shall be zinc or cadmium plated.

15G.9 Pipe sleeves. Standard weight zinc coated steel pipe sleeves shall be provided at all penetrations of walls, and floors, and shall be in accordance with 53Y. A minimum of 1 inch clearance shall be provided between the piping and any woodwork or other combustible materials.

15G.10 Vibration isolators. Flexible bronze piping connectors with single braid shall be provided for all piping connections to the diesel generator sets.

15G.11 Radiator air discharge louvers shall be of the automatic gravity type constructed of zinc coated steel; frames shall be not less than No. 16 U. S. Gage and blades shall be not less than No. 20 U.S., gage.

15G.12 Electrical work is specified in the division entitled "Electrical."

15G.13 Ductwork shall be provided in a neat workmanlike manner; ducts shall be constructed of zinc coated sheet steel conforming to ASTM A525, coating class 1.25 ounces per square foot, and the construction and installation shall conform to NFPA 90A. The ducts shall be properly braced and reinforced. All slip joints shall be made in the direction of flow unless otherwise indicated. All ducts, unless otherwise approved,

shall be true to the dimensions indicated and shall be straight and smooth on the inside with neatly finished air tight joints. The ducts shall be securely anchored into the building construction in an approved manner and shall be completely free from vibration under all conditions of operation. Duct supports shall be not less than 1/8 inch by 1 inch zinc coated flat bar.

15G.14 Asbestos cloth connectors for air ducts shall be provided at duct connections to the radiator of the engine. All cloth connectors shall be supported at each end by metal angle frame bands, securely bolted in place as to be air tight. Asbestos cloth shall conform to SS-C-466, Form 1, Grade AAA, Style 1.

15G.15 Identification tags and plates. All equipment, gages, thermometers, and controllers shall be provided with tags numbered and stamped for their usage. Plates and tags shall be of brass or suitable nonferrous material and shall be securely mounted or attached.

15G.16 Quality assurance provisions shall be provided in accordance with MIL-G-19826 and as specified herein. The gasoline fuel storage tanks and piping system shall be tested hydrostatically or pneumatically at 1-1/2 times the working pressures but in no instance less than 50 psig for the piping and 10 psig for the tanks and shall show no leakage or reduction in gage pressure after 4 hours. The gasoline engines, electric generators and auxiliaries shall be operated for a period of 8 hours under normal operating conditions. During the test all control equipment shall be adjusted and coordinated for satisfactory operation as in service. It shall be demonstrated satisfactorily that upon a simulated shut-off of the normal power source current, the automatic gasoline engine generator sets will start automatically within the maximum time specified and will deliver the emergency power current specified until resumption of the normal source current. The demonstration shall be repeated until the Officer in Charge is satisfied that the electric generator sets operate satisfactorily in every respect.

15G.17 Erection supervision. The Contractor shall furnish the services of a qualified erection engineer regularly employed by the gasoline-generator set manufacturer to supervise the installation and field testing of the gasoline generator sets.

15G.18 Drawings required of the Contractor. Before commencing any work, the Contractor shall submit for approval layouts of all systems included in this section of the specifications. Layouts shall be based on field established conditions and interference between architectural, mechanical, electrical, and structural systems that cannot be resolved in the field shall be clearly defined. Shop drawings submitted for approval as required by the section of this specification entitled

"General Paragraphs" shall contain complete information in detail to show compliance with the specification. The following minimum information shall be furnished for each submitted item:

(a) Reference shall be made to the paragraph or subparagraph or the specification that specified the item.

(b) The intended use shall be specifically stated.

(c) Complete physical data shall be furnished.

(d) Completed certified performance data shall be furnished to show the actual capacity of the equipment as tested.

(e) Noncomplying features and reason for noncompliance shall be stated in detail.

(f) Partial submittals, or submittals of less than the whole of any system made up of interdependent components will not be considered.

15G.19 Quality Control. Provisions of the section entitled "Contractor Quality Control" shall apply.

15G.19.1 Tests: All tests to determine conformance with the specified requirements shall be performed by the Contractor's quality control organization.

15G.19.2 Materials, tests and test reports. The testing requirements corporated in referenced documents for materials will be waived, provided certified copies of reports of tests from approved laboratories performed on previously manufactured materials are submitted and approved. Test repor shall be accompanied by notarized certificates from the manufacturer certifying that the previously tested material is of the same type, quality, and manufacture as that furnished for the project.

---o0o---

DIVISION 16 ELECTRICAL

Section 16A Interior Electrical
16B Exterior Electrical

SECTION 16A INTERIOR ELECTRICAL

16A.1 General requirements. The work includes the provision of new interior electrical systems. The systems shall be complete and ready for operation. All conduit shall be run concealed, except where indicated otherwise. All conduit shall be inspected and approved before being buried, covered or concealed. All materials and workmanship shall be in accordance with 9Y and NFPA 70, except as specified or indicated otherwise. Material arriving on job site shall be stored in such a manner as to keep material free of rust and dirt and so as to keep material properly aligned and true to shape. Rusty, dirty, or misaligned material shall be rejected. All electrical materials shall be new and as approved by the Underwriters' Laboratories, Inc., unless specified otherwise. Defective materials damaged during installation or test shall be replaced or repaired in a manner meeting with the approval of the Officer in Charge. The contract drawings indicate the extent and general arrangement of equipment, fixtures, and conduit and wiring systems. If any departures are deemed necessary by the Contractor, details of such departures and the reasons therefor shall be submitted as soon as practicable and within 30 days after award of the contract to the Officer in Charge for approval. No such departure shall be made without prior written approval of the Officerin Charge. The Contractor shall be responsible for providing properly sized circuit breakers to serve equipment and motors furnished which differ from that specified. This shall be further understood to include branch circuit wiring, conduit, disconnect switches, etc., in accordance with the appropriate codes and specifications.

16A.1.1 Equipment shall be in accordance with standards of the National Electrical Manufacturers Association (NEMA).

16A.1.2 Standard products. Unless otherwise indicated in writing by the Officer in Charge, the materials to be provided under this specification shall be standard products of manufacturers regularly engaged in the production of such equipment and shall be the manufacturer's latest design. All items of the same type or ratings shall be identical.

16A.2 Applicable publication. The following publications of the issues listed below, but referred to elsewhere by basic designation only, form a part of this specification to the extent indicated by the references thereto (where a number is suffixed to the specification number, it denotes the effective amendment to the specification):

(a) Naval Facilities Engineering Command Specifications.

9Yi	Electrical apparatus, distributing systems, and wiring, with erratum No. 1.

(b) Federal and Military Specifications.

J-C-30(1)	Cable and wire, electrical (power, fixed installations).
W-B-30(2)	Ballast, fluorescent lamps.
W-C-375a(3)	Circuit breaker, molded case; branch circuit and service.
W-C-583b	Conduit boxes and outlet fittings, floor (for rigid metal conduit).
W-C-586a(1)	Conduit outlets and entrance caps, electrical, cast metal for shore use.
W-F-406b	Fittings for cable, power, electrical and conduit, metal, flexible.
W-F-408b	Fittings for conduit, metal, rigid (rigid steel and electrical metallic tubing).
W-F-791d(1)	Fuse, cartridge and fuse, plug.
W-J-800c(1)	Junction box; extension, junction box; cover, junction box (steel) cadmium or zinc-coated).
W-P-115a(2)	Panel, power distribution.
W-S-865c(1)	Switch, box (enclosed), surface-mounted.
CC-M-636c	Motors, fractional horsepower (alternating-current).
CC-M-641d	Motors, alternating-current (integral horsepower).
WW-C-540c(1)	Conduit, metal, rigid (electrical, aluminum).
WW-C-563	Conduit, metal, rigid; and bend and elbow, electrical conduit; thin wall (EMT).
WW-C-566b	Conduit, metal flexible.
WW-C-581d(3)	Conduit, metal, rigid; and coupling, elbow, and nipple, electrical conduit; zinc-coated.

(c) Other Government Specifications and Standards.

LANTDIV Plates

16-A through 16-Z	Light Fixture

(d) Non-Government Specifications and Standards.

National Fire Protection Association (NFPA)

No. 70-1968	National electrical code.

16A.3 Electrical service. All arrangements shall be as indicated with proper extensions, terminations, etc. Final connections to the power distribution system shall be made by the Contractor as directed by the Officer in Charge. Building service: 480/277-volt, 3 - phase, 4-wire, WYE - connected alternating current.

16A.3.1 Main Building service entrance equipment rated 800 amperes and above shall consist of circuit breakers or electrically operated load break switches (with protection against single phasing). These devices shall be equipped with ground fault protective devices consisting of current transformers and fault protection relays with time delay suitable for protecting circuit components against phase to ground faults.

16A.4 Grounding. Except where specifically indicated otherewise, all exposed non-current-carrying metallic parts of electrical equipment, raceway systems and neutral conductor of the wiring system shall be grounded. The neutral ground connection shall be made at the main service equipment and shall be extended to the point of entrance of the metallic water service. Connection to the water pipe shall be made by a suitable ground clamp or lug connection to a plugged tee. If flanged pipes are encountered, connection shall be made with the lug bolted to the street side of the flange connection. If there is no metallic water service to the building, ground connection shall be made to driven rods on the exterior of the building.

16A.4.1 Equipment grounds. The Contractor shall provide an equipment grounding conductor which shall be separate from the electrical system neutral conductor. The quipment ground conductor shall be type TW wire, colored green, and sized to conform to the National Electrical Code. It shall be solid and continuous from a connection at the earth to all distribution panelboards. Equipment ground conductors shall be provided in all branch circuits serving convenience outlets, receptacles, portable and permanently installed electrical appliances, equipment, apparatus, and other miscellaneous metal enclosing bodies (including light switch boxes) normally within contact of personnel. Branch circuit ground conductors shall be sized in accordance with the National Electrical Code. Ground connections at panelboards, outlets, equipment, and apparatus shall be made in an approved and permanent manner. Resistance to ground shall not exceed 3 ohms. Each ground shall consist of a separate number 6 AWG ground wire in 3/4 inch conduit between the equipment and a readily accessible grounding connection to a cold water pipe. The quipment end of the ground wire shall consist of a coiled length at least twice as long as the terminal cabinet or backboard height.

16A.4.2 Ground rods shall be of copper-clad steel not less than 3/4-inch in diameter, 10 feet long, driven full length into the earth. The maximum resistance of a driven ground shall not exceed under normally dry conditions ohmic values indicated in 9Y.

16A.5 Wiring methods. Generally, unless other wise indicated, wiring shall consist of insulated conductors installed in rigid aluminum or zinc-coated-steel conduit, except for sizes 2 inches in diameter and smaller, electrical metallic tubing may be used. Electrical metallic tubing shall not be used for embedment in concrete or where exposed to mechanical damage. Raceways shall be concealed within finished walls, ceilings, and floors where possible and shall be kept 6 inches away from parallel runs of flues and steam or hot-water pipes. Raceways shall be supported and secured at intervals of not more than 8 feet. Raceways underground or under slabs of grade shall be encased in a concrete envelope in accordance with 9Y, except granular fill may be provided between top of envelope and slab in lieu of placing envelope directly under the floor slab.

16A.5.1 Aluminum electric conduit shall conform to WW-C-540 and shall be of aluminum alloy 6063-T-42. Aluminum fittings and boxes shall conform to UL No. 514. In dry locations, fittings and baxes may be of aluminum or of zinc-or cadmium coated steel. In wet or damp locations fittings shall be aluminum or aluminum alloy containing less than one percent copper. Aluminum conduit and fittings shall not be used for embedment in concrete, earth, or capillary water barrier. In other locations aluminum may be used as an option to steel. Nonaluminum sleeves shall be used when passing through poured concrete.

16A.5.2 Zinc-coated rigid steel conduit shall conform to WW-C-581. Final connections to motors and any other vibrating or rotating equipment shall be in flexible conduit to conforming to WW-C-566. Electrical metallic tubing shall conform to WW-C-563.

16A.5.3 Fittings, outlet boxes and outlet bodies shall be zinc-coated in accordance with 9Y, W-F-406 and W-F-408.

16A.5.4 Conduit and accessories shall be furnished and installed for all power, lighting, and the various control systems where indicated, specified or required to form continuous conduit raceways from the various power and control entrances to the building to the various power, lighting and control outlets.

16A.5.5 Outlet bodies, etc. shall be standard steel, zinc-coated or cadmium coated conforming to W-J-800 or cast-metal hub type conforming to W-C-586.

16A.5.6 Telephone conduit and fittings, two inches or less in diameter, may be electrical metallic tubing (EMT) for interior installations unless otherwise specified or required by specification 9Y or the National Electrical Code. All telephone conduit elbows shall be long sweep type with a minimum inside radius of ten times the conduit diameter unless otherwise noted. Conduits shall have a minimum diameter of 3/4 inch unless noted otherwise. Conduits serving telephone outlets in office areas shall have a minimum diameter of one inch.

16A.6 Wiring. The work includes the provision of a complete system of conductors as indicated or necessary to accomplish the required connections. All conductors shall be installed in a neat and workmanlike manner, with care being taken that conductors are not kinked, scarred, or damaged during installation.

16A.6.1 Conductors for power and lighting shall be copper no. 12 AWG minimum size, and for dry locations, 600 volts, type RHW, RHH or THW for no. 6 AWG and larger and type THW for smaller than no. 6 AWG. In wet locations, floor slabs in contact with ground or below grade, conductors shall be type THWN. Type TW conductors shall be used where specifically indicated herein. All conductors, both feeder and branch circuit, shall be color coded in accordance with Section 200-2 and 210-5 of the National Electrical Code. Color shall be integral with sheath. On conductors larger than No. 2 AWG, colored mastic tape may be used to color code the conductors at all panels, junction boxes, and other enclosures. Color coding shall be as follows:

Phase A	Black only
Phase B	Red only
Phase C	Blue only
Neutral	White only
Ground	Green only

All other conductors shall be of other colors. All electrical designs are based on copper wire and cable.

16A.6.2 Connectors shall be in accordance with specification 9Y.

16A.7 Boxes and supports. Boxes shall be provided in the wiring of raceway systems wherever required for pulling of wires, making connections, and mounting of devices or fixtures. Boxes for metallic raceways shall be of the cast-metal hub type when located in normally wet locations, when surface mounted on outside of exterior surfaces, and when installed exposed up to 7 feet above interior floors and walkways. Boxes in other locations shall be sheet steel except that aluminum boxes may be used with aluminum conduit. Each box shall have the volume required by the National Electrical Code for the number of conductors enclosed in the box. Boxes for mounting fixtures shall be not less than 4 inches except that smaller boxes may be installed as required by fixture configuration, as approved. Boxes installed for concealed wiring shall be provided with suitable extension rings or plaster covers, as required. Boxes for use in masonry-block or tile walls shall be square-cornered tile-type or standard boxes having square-cornered tile-type covers. Cast-metal boxes installed in wet locations and boxes installed flush with the outside of exterior surfaces shall be gasketed. Separate boxes shall be provided for flush or recessed fixtures when required by the fixture terminal operating temperature, and fixtures shall be readily removable for access to the boxes unless ceiling access panels are provided. In treatment plant building suspended ceilings, fixture housings shall be supported by structural members. Boxes and supports shall be fastened to wood with wood screws or screw-type nails of equal holding strength, with bolts and expansion shields on concrete or brick, with toggle bolts on hollow masonry units, and with machine screws or welded studs on steel work. Threaded studs driven in by powder charge and provided with either lockwashers and nuts or nail type nylon anchors are acceptable in lieu of wood screws,

expansion shields, or machine screws. In open overhead spaces, cast metal boxes threaded to raceways need not be separately supported except where used for fixture support; cast metal boxes having threadless connectors and sheet metal boxes shall be supported directly from the building structure or by bar hangers. Where bar hangers are used, the bar shall be attached to raceways on opposite sides of the box and shall be supported with an approved type fastener not more than 24 inches from the box. Penetration of more than 1-1/2 inches into reinforced-concrete beams or more than 3/4 inch into reinforced-concrete joists shall avoid any main reinforcing steel.

16A.7.1 Boxes for use with raceway systems shall not be less than 1-1/2 inches deep except where shallower boxes required by structural conditions are approved. Boxes for other than lighting-fixture outlets shall be not less than 4 inches square except that 4-inch by 2-inch boxes may be used where only one raceway enters the outlet. All telephone outlet boxes shall be a minimum of 4 inches square by 1-1/2 inches deep unless noted otherwise.

16A.7.2 Pull boxes of not less than the minimum size required by the National Electrical Code shall be constructed of code-gage aluminum or galvanized sheet steel except where cast-metal boxes are required in locations specified above. Boxes shall be furnished with screw-fastened covers. Where more than one feeder passes through a common pull box, the feeders shall be tagged to indicate clearly the electrical characteristic, circuit number, and panel designation. Additional pull boxes or splice/junction boxes not specifically shown in the telephone conduit system will not be permitted without prior approval of Public Works Department of the activity. This approval shall be requested through the Officer in Charge.

16A.7.3 Conduits stubbed up through concrete floors for connections to freestanding equipment shall be provided with a short elbow and an adjustable brass top or coupling of brass or bronze threaded inside for plugs, set flush with the finished floor. Wiring shall be extended in rigid threaded conduit to equipment, except that were required, flexible conduit may be used 6 inches above the floor. Screwdriver-operated threaded flush plugs shall be provided in conduits from which no equipment connections are made.

16A.8 Panelboards. Lighting and appliance branch-circuit panelboards shall be type I, class I, factory assembled automatic circuit-breaker type conforming to W-P-115. Distribution, power or feeder panelboards shall be circuit breaker equipped, type I (and fusible switch type II where shown). Circuit-breaker interrupting capacities shall con-

form to W-C-375 unless otherwise indicated and except that circuit breakers designated as class Ia and Ib shall have an interrupting capability of 10,000 amperes asymmetrical. Multipole circuit breakers shall be of the common-trip type having a single operating handle. Plug-in type circuit breakers are not acceptable. Switches serving as motor-disconnect means shall be horsepower rated in conformance with table III of W-S-865. Wiring gutters on panelboards having through feeders shall be 5-inch minimum. Panelboards shall not exceed 78 inches in height and shall be so mounted that the height of the top operating handle will not exceed 6 feet 6 inches from the floor.

16A.8.1 All multi-pole breakers shall be designed so that an overload in one pole automatically causes all poles to open. The main phase bus and the phases to which each two-pole breaker is connected shall be clearly indicated. Any three adjacent breaker poles shall be connected to Phase A, B, and C respectively and that same relationship of phase sequence shall be maintained.

16A.8.2 Complete panelboard assembly shall be so designed that any individual breaker can be removed without disturbing adjacent units or without loosening or removing supplemental insulation supplied as a means of obtaining clearances and other requirements of the Underwriters' Laboratories. Bus bars shall be securely fastened to bases and shall not depend upon breakers for support. All main buses and back pans shall be so designed that branch circuits may be changed without additional machining, drilling or tapping.

16A.8.3 Panelboard shall be made of cold rolled sheet steel in accordance with gages as required by the Underwriters' Laboratories. All trim shall havedoor equipped with flush-type combination lock and catch, three milled-type keys being supplied with each lock. Each lock shall be keyed same as lock on other panelboards.

16A.8.4 Before manufacturing, drawings shall be submitted showing dimensions of panelboard cabinets, gutter space, gage and trim,main bus and terminal ratings, manufacturer's name and type of breakers, and details of construction of the panelboards to determine compliance with the specifications.

16A.8.5 Neutral and ground buses. Provide an insulated neutral bus for each panel for connection of both feeder and branch circuit neutral wires. A separate ground bus, bonded to the steel cabinet shall be marked with a green stripe along the front of the bus.

16A.8.6 Provide panel with typewritten index card and transparent cover in frame on inside of door indicating circuit control.

16A.9 Disconnecting devices shall be provided as required by the National Electrical Code and shall conform to 9Y whether -ndicated on drawings or not. Disconnect switches for exhaust fans on roof shall be furnished integral with motors.

16A.10 Switches, convenience receptacles, and other special outlets shall have brown molded plastic bodies and handles and shall conform to requirements of 9Y where applicable and shall be rated as follows:

16A.10.1 Switches on lighting circuits shall be 20-ampere, (120 volt where req) & 277-volt, A.C. only type, single-pole, three-way, four-way as required. Pilot lights indicated on the drawings shall consist of yoke-mounted candelabra-base sockets rated at 15 watts, 125 volts, and fitted with glass or plastic jewels. A clear 6-watt lamp shall be furnished and installed in each pilot switch, jewels for use with switches controlling motors shall be green, and jewels for other purposes shall be red.

16A.10.2 Single and duplex convenience receptacles shall be 20-ampere, 125-volt, 3-wire-grounding type with screw-type terminals, in accordance with 9Y.

16A.10.3 Switched duplex receptacles shall be similar to those specified in paragraph entitled "Single and duplex receptacles" above, except that the ungrounded pole of each receptacle shall be provided with a separate terminal. Top receptacle shall be switched when installed.

16A.10.4 Weatherproof receptacles shall consist of a duplex receptacle as specified in paragraph entitled "Single and duplex receptacles", mounted in a flush cast-metal box with a gasketed, weatherproof, cast-metal cover plate and cap over each receptacle opening. The cap shall be permanently attached to the cover plate by a short length of bead chain.

16A.10.5 Single convenience receptacles shall be 20-amperes, 125 volt, two-pole three-wire grounding type.

16A.10.6 Telephone outlets shall be in accordance with the applicable requirements of specfication 9Y except each outlet shall consist of a 4-inch square by 1-1/2 inch deep galvanized outlet box

with a single device raised cover, not to exceed 3/4inch in height, with a steel plate with 1/2-inch bushed cord hole. Telephone outlets shall be mounted 28 inches above finished floor in office areas and at heights indicated for other areas.

16A.10.7 Special devices shall be as shown on the drawings.

16A.10.8 Device plate, except as otherwise specified above, shall be of brown phenolic compound conforming to applicable requirements of 9Y and suitable for devices.

16A.10.9 Enclosed safety switches shall conform to W-S-865, Type NDS or NDD but shall have no cover interlock.

16A.11 Lighting fixtures shall be in accordance with 9Y and as shown on the drawings and on LANTDIV plates Nos. 16-B, C,F,J,O,X and shall be furnished complete with lamps of the numbers, type and wattages shown. Fluorescent ballasts shall conform to W-B-30. Ballasts operating lamps size 40 watts and larger shall be protected against overheating by means of a built-in protector. All open tube fluorescent fixtures shall have spring loaded, telescoping sockets. Lighting fixtures shall not be supported from suspended ceilings, but shall be supported from structural members above.

16A.12 Motors and controllers shall conform to 9Y, CC-M-636 and CC-M-641 and to the latest applicable standards of the NEMA for type, class, and size as specifically applied. Motors shall be suitable for across-the-line starting. (Reduced-voltage controllers shall be provided for polyphase motors 30 horsepower or larger. Reduced-voltages starters shall be of the single-step autotransformer, reactor, or resistor type having an adjustable time interval between application of reduced and full voltages to the motors. Wye-delta reduced voltage starter or part winding increment starter having an adjustable time delay between application of voltage to first and second winding of motor may be used in lieu of reduced voltage starters for starting of centrifugally operated equipment or reciporcating compressors provided with automatic unloaders.) Motors above 1/2 horsepower shall be arranged for operation on 460 or 240 volt, 3-phase, 3-wire, 60-cycle current as indicated on the drawings. Motors 1/2 horsepower and below shall be for operation of 120 or 208 volts, single-phase, 2 or 3 wire, 60-cycle current. Motor controllers for manual control of single-phase motors shall be of the enclosed toggle switch type. Each type of controller shall contain thermal running overload protection and manual reset means. Overload elements shall be provided in each phase.

Provide hand-off-automatic switch and pilot light in cover on each magnetic starter when used with a pressure, float, or similar automatic type or maintained contact switch or where shown. Motors and controllers furnished under the division entitled "Mechanical" shall be installed under this section.

16A.12.1 Motors shall be of sufficient size for the duty to be performed and shall not exceed their full load nameplate current rating when driven equipment is operated at specified capacity under the most severe conditions likely to be encountered. Fractional horsepower motors shall conform to CC-M-636 and integral horsepower motors shall conform to CC-M-641. Dual voltage motors will not be permitted on 208 volt systems. All motors shall operate at full capacity with a voltage variation of plus or minus 10 percent of the system nominal voltage.

16A.12.2 Motor control centers shall be indoor type and shall contain combination starters as indicated. Control centers shall be NEMA class 1, type C. Each control center shall be mounted on floor sills or mounting channels. Combination starters shall be provided with fusible switches,

16A.13. Fuses. The Contractor shall provide a complete set of fuses for all switches, panels, bus plugs, switchgear, and control centers as required. Time-current-tripping characteristics of fuse serving motors or connected in series with circuit breakers shall be coordinated for the oroper operation. Fuses shall have a voltage rating not less than the circuit voltage. Fuses shall conform to W-F-791.

16A.13.1 Cartridge fuses, dual-element time-lag type, shall be nonrenewable with an interrupting rating not less than 50,000 amperes. At 500 percent current, cartridge fuses shall not blow in less than 10 seconds. Cartridge fuses shall be used for circuits rated in excess of 30 amperes, 125 volts, except where current-limiting fuses are indicated.

16A.13.2 Cartridge fuses, current-limiting type, where indicated, shall be nonrenewable with a tested interrupting capacity not less than 100,000 amperes. Fuseholders shall be of the type that will reject all' class H fuses.

16A.14 Underground-service conduits. Empty conduits for underground electric-service cable and telephone cable shall be provided. Except where otherwise indicated, conduits shall terminate approximately 5 feet beyond the building wall and 2 feet below finished grade, with the outside ends plugged.

16A.15 Transformers shall be general-purpose dry-type constant-potential transformers of the totally-enclosed self-cooled type in an indoor enclosure. Full-capacity NEMA standard taps, 2-2-1/2 percent above below rated voltage shall be provided in the high-voltage winding. Transformers with sound levels greater than 45 decibels shall be installed on resilient vibration-isolating mounting to prevent amplification of sound. Audible-sound-levels tests shall be made in accordance with NEMA ST 1, (except that transformers shall be the quiet type with average sound level not exceeding the following:

Transformer rating - KVA	Average sound level - decibels
0-9	37
31-113-1/2	45

16A.16 Electric heaters of types and characteristics as detailed on drawings shall be furnished and installed.

16A.16.1 Unit heaters shall be of the forced convection type securely fastened to wall or ceiling in an approved manner. Heaters shall consist of fan, heating elements, and housing. Housing shall be reinforced steelfitted with adjustable louvers to permit directing the heated air where desired. All ferrous parts shall be treated to prevent rusting before application of a baked-enamel finish. Heating elements shall consist of helically coiled nickel-chromium resistance wire embedded in an electrical-insulating powder within a metal sheath. Castings, if used, shall be free from defects of any nature. Hotspot temperature shall not exceed 750 degrees Fahrenheit. A propeller fan with balanced quiet-operating blades of corrosion-resistant metal or treated steel shall be mounted on the motor. The motor shall be the totally enclosed, split-phase, induction type, and shall have sleeve bearings with lubrication facilities sufficient for an operating period of at least 6 months. Motor speed shall not exceed 1,800 rpm. A manually reset thermal cutout shall be provided to shut off the electric supply automatically in the event of overheating. The heating shall be automatically controlled by a integral thermostat and self contained disconnect switch.

16A.16.2 Thermostats for electric heaters shall have an approximate range of from (55 to 85 degrees Fahrenheit) (30 to 55 degrees Fahrenheit) and an operating differential of 3 degrees Fahrenheit or less. Temperature setting shall be capable of being locked in a fixed position by a concealed locking device. Thermostat shall be enclosed in a metal case and shall have an indicating thermometer. Thermostat may control the load directly if of adequate rating; otherwise, a separate magnetic contactor shall be used. Control shall open all ungrounded conductors. Thermostats on exterior walls shall be mounted on a bse of 1/2-inch thick plywood.

16A.17 Tests. Upon completion of the work, before interconnection of systems, the grounding system shall be tested to assure continuity and compliance with the requirement that ground resistances not exceed the values specified. Upon completion of the work, all systems shall be tested as in service and in accordance with the applicable requirements of 9Y.

16A.18 Field painting is as specified under division entitled "Finishes".

16A.19 Identification tags and plates. All electrical equipment and controllers shall be provided with tags numbered and stamped for their usage. Plates and tags shall be of brass or suitable nonferrous material and shall be securely mounted or attached.

16A.20 Drawings required of the Contractor. Before commencing any work, the Contractor shall submit for approval shop drawings and layouts of all systems included in this section of the specifications. Layouts shall be based on field-established conditions and interference between architectural, mechanical, electrical, and structural systems that cannot be res-lved in the field shall be clearly defined. Shop drawings shall contain complete information in detail to show compliance with the specification. The following minimum information shall be furnished for each submitted item:

(a) Reference shall be made to the paragraph orsubparagraph of the specification that specified the item.

(b) The intended use shall be specifically stated.

(c) Complete physical data shall be furnished.

(d) Complete certified performance data shall be furnished.

(e) Noncomplying features and reason for noncompliance shall be stated in detail.

(f) Partial submittals, or submittals of less than the whole of any system made up on interdependent components will not be considered.

ONE PIECE 20 GAGE FORMED STEEL HOUSING, CHEMICALLY TREATED FOR RUST PREVENTION, FIXTURE TO HAVE BAKED WHITE ENAMEL FINISH

LENS SHALL BE HINGED ALONG ENTIRE LENGTH OF HOUSING

ONE PIECE INJECTION ACRYLIC PLASTIC LENS MIN OF 1/8 " THICK

BALLAST - HIGH POWER FACTOR, E.T.L., CBM APPROVED RAPID START. BALLASTS SHALL BE CLASS "P", WITH SOUND RATING OF "A".

LUMINOUS PLASTIC ENDS

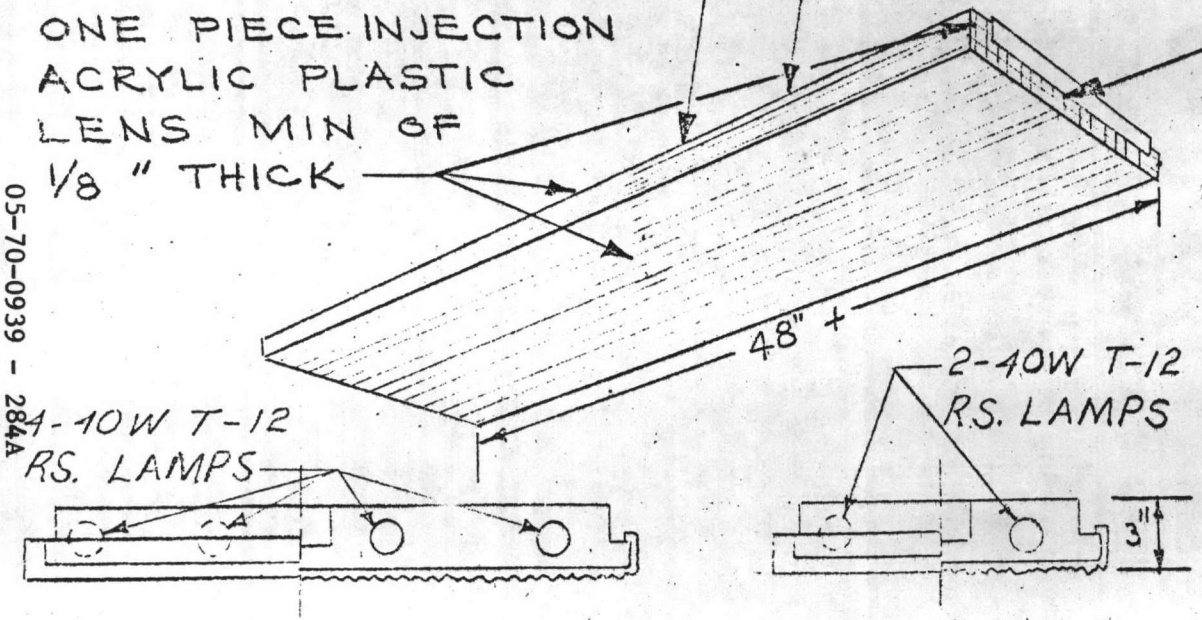

TYPE 2

TYPE 1

FIXTURE TYPE	NUMBER OF RAPID START LAMPS	APPROX WIDTH
16-A-1	2	10"
16-A-2	4	17"

05-70-0939 - 284A
Section 16A

LANTDIV PLATE 16-A

3-9-70

FIXTURE TYPE	NUMBER OF RAPID START LAMPS	APPROX WIDTH
15-A-1	2	10"
15-A-2	4	17"

TYPE 1

TYPE 2

LAUNDRY PLATE 15-A

HOUSING 20 GAGE DIE FORMED STEEL CHEMICALLY TREATED FOR RUST PREVENTION AND WITH BAKED WHITE ENAMEL FINISH

DIE FORMED 20 GAGE STEEL FRAME FOR DIFFUSER W/ CONCEALED HINGES.

HIGH POWER FACTOR E.T.L. APPROVED RAPID START BALLASTS. SHALL BE CLASS "P" WITH SOUND RATING OF A.

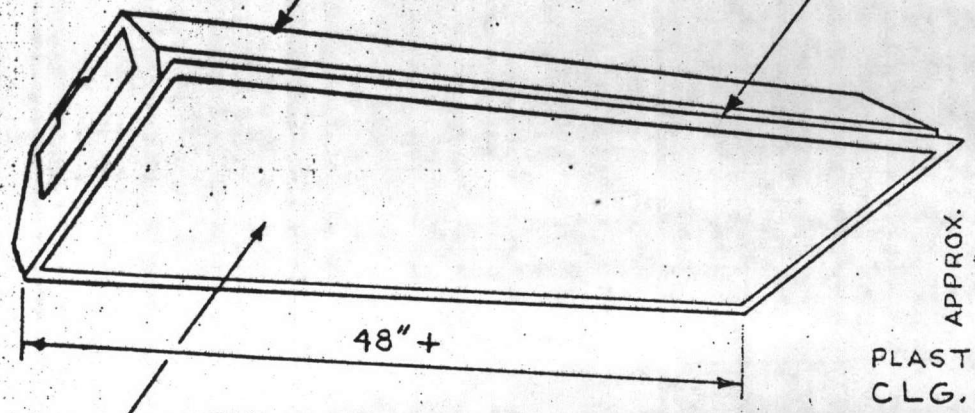

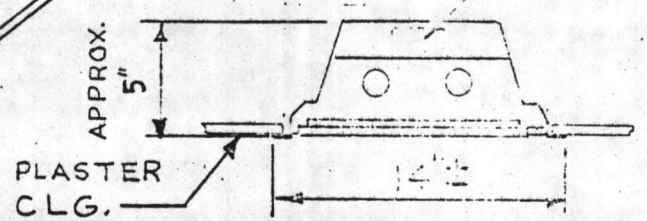

TYPE 1

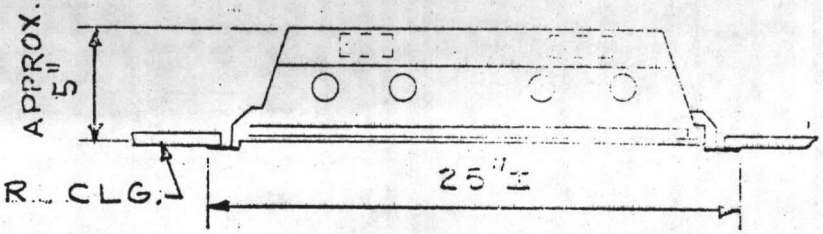

TYPE 2

05-70-0939 - 284B
Section 16A

LANTDIV PLATE 16-B

3-9-70

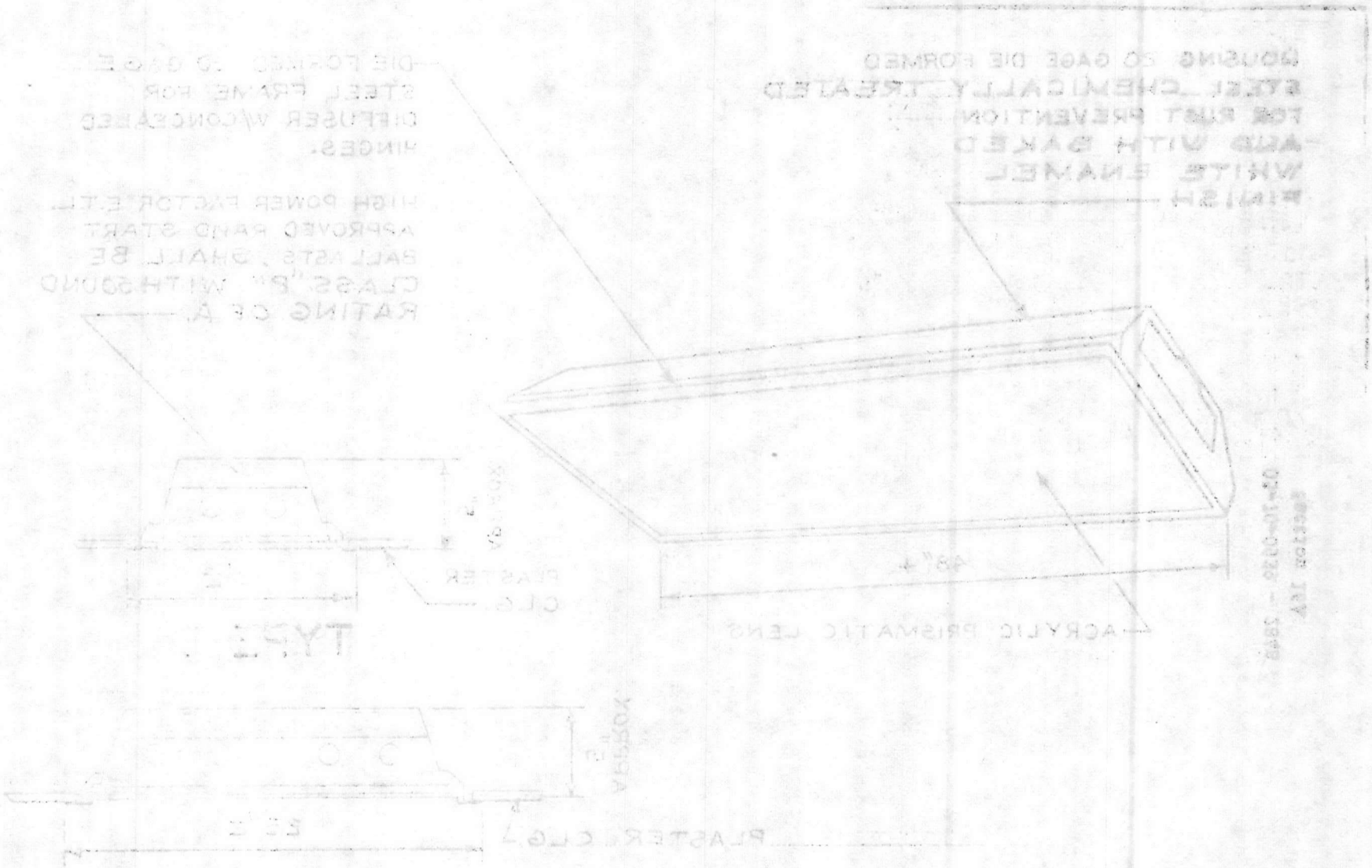

HOUSING 20 GAGE DIE FORMED STEEL, CHEMICALLY TREATED FOR RUST PREVENTION. AND WITH BAKED WHITE ENAMEL FINISH

DIE FORMED 20 GAGE STEEL FRAME FOR DIFFUSER W/ CONCEALED HINGES.

HIGH POWER FACTOR E.T.L. APPROVED RAPID START BALLAST. SHALL BE CLASS "P" WITH SOUND RATING OF "A"

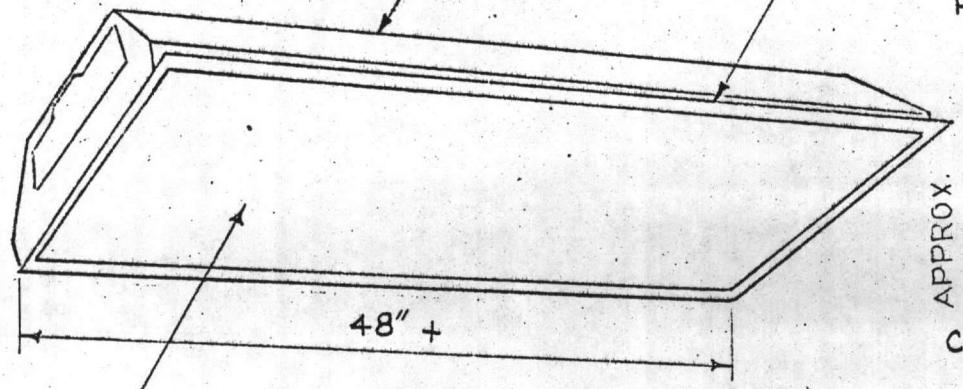

05-70-0939 - 284C
Section 16A

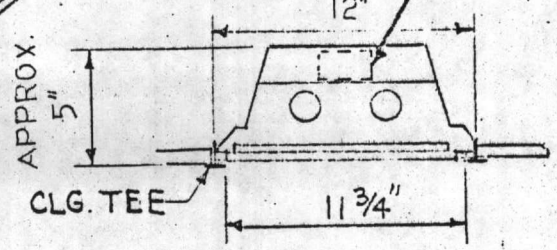

TYPE-1

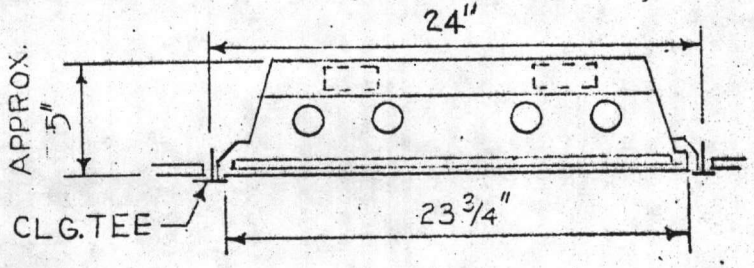

TYPE-2

LANTDIV PLATE 16-C 3-9-70

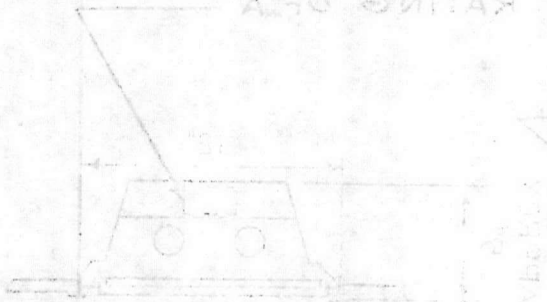

TYPE-1

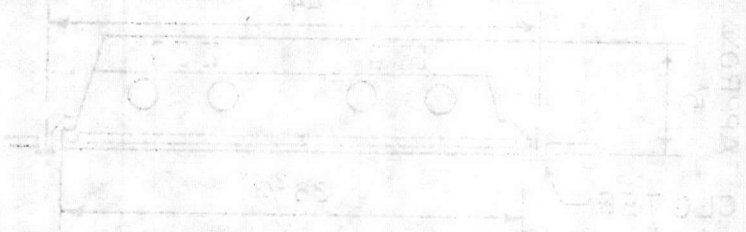

TYPE-2

LANDRY PLATE 16-C 3-9-76

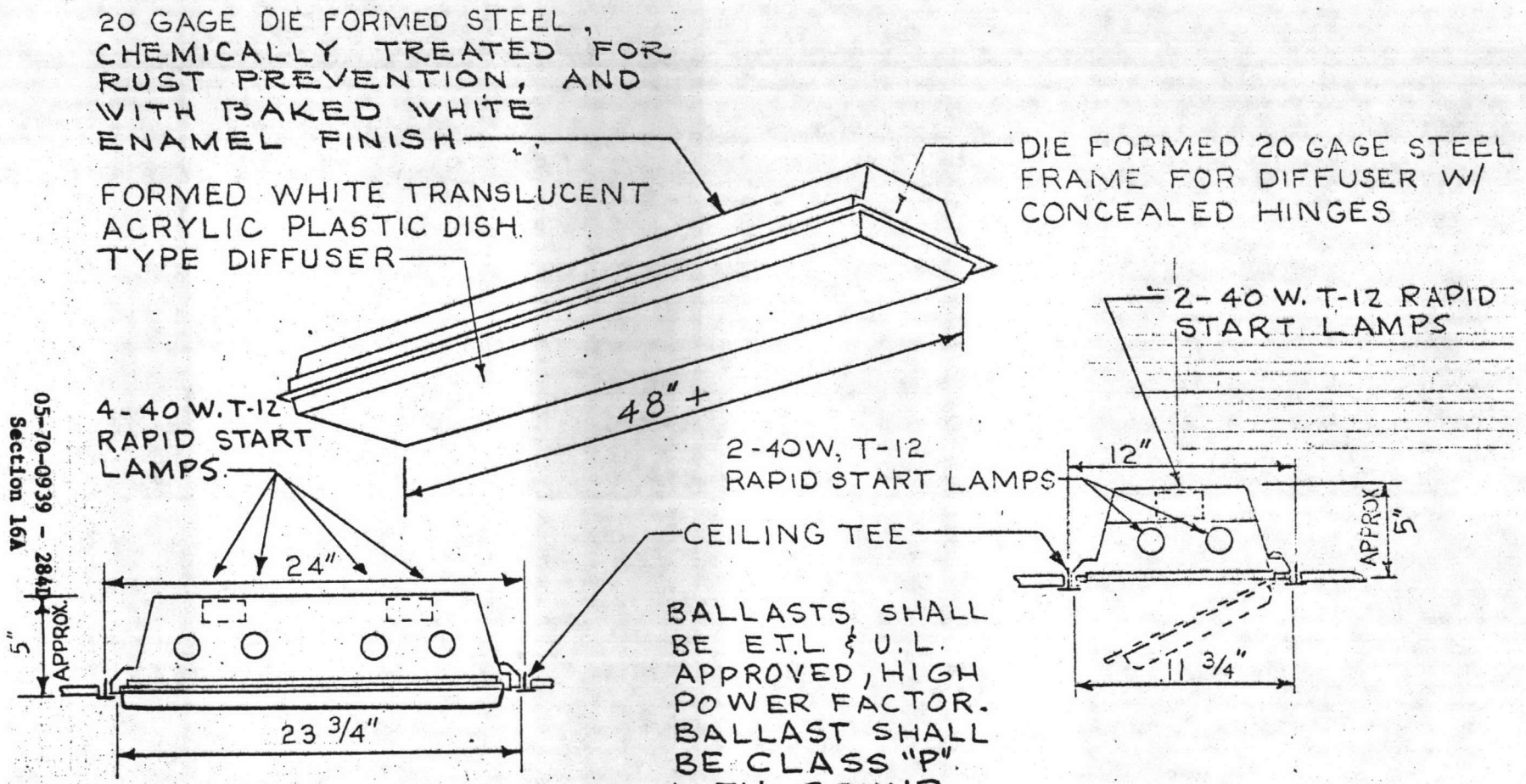

LANTDIV PLATE 16-D 3-9-70

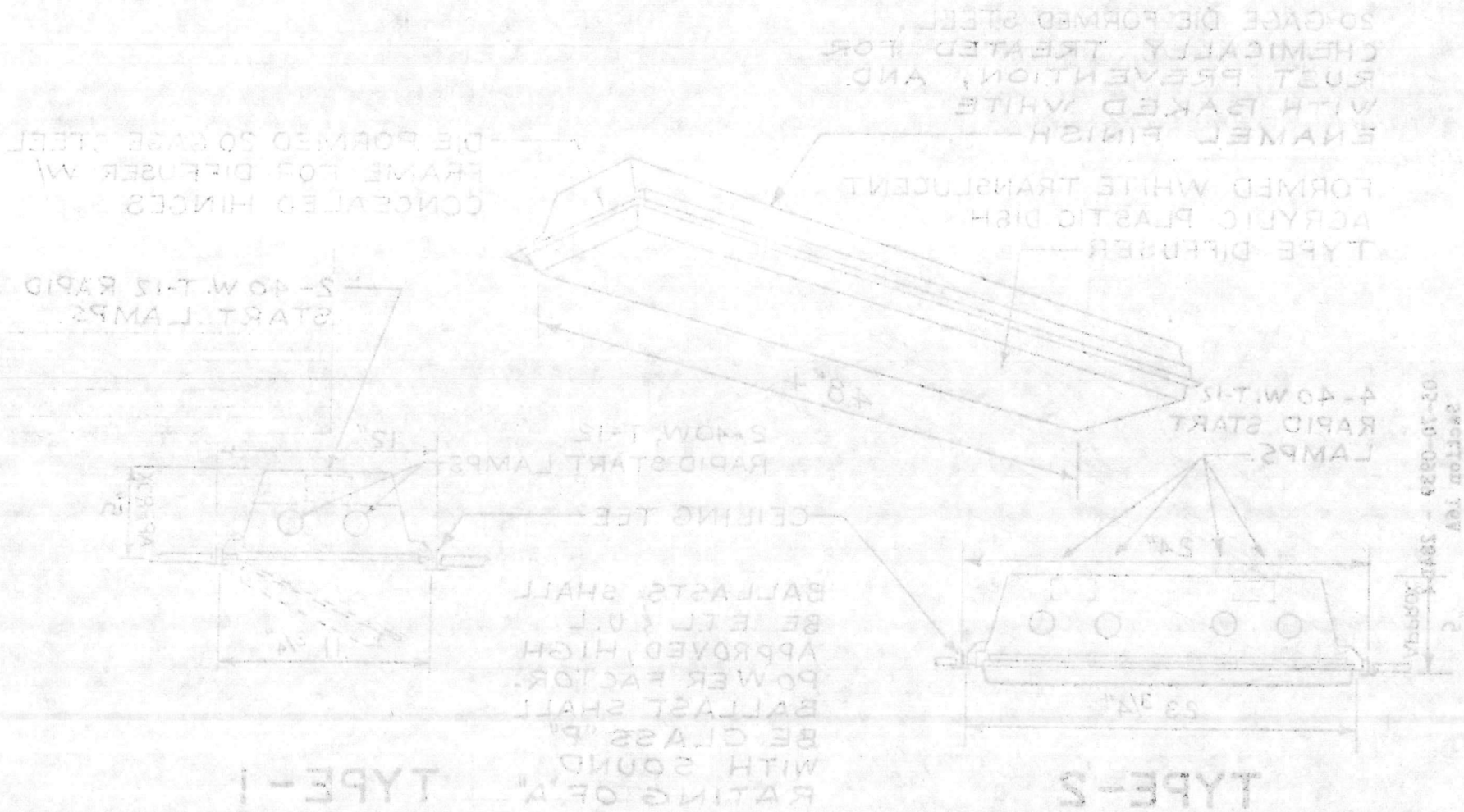

LANTDIV PLATE 16-D 5-9-70

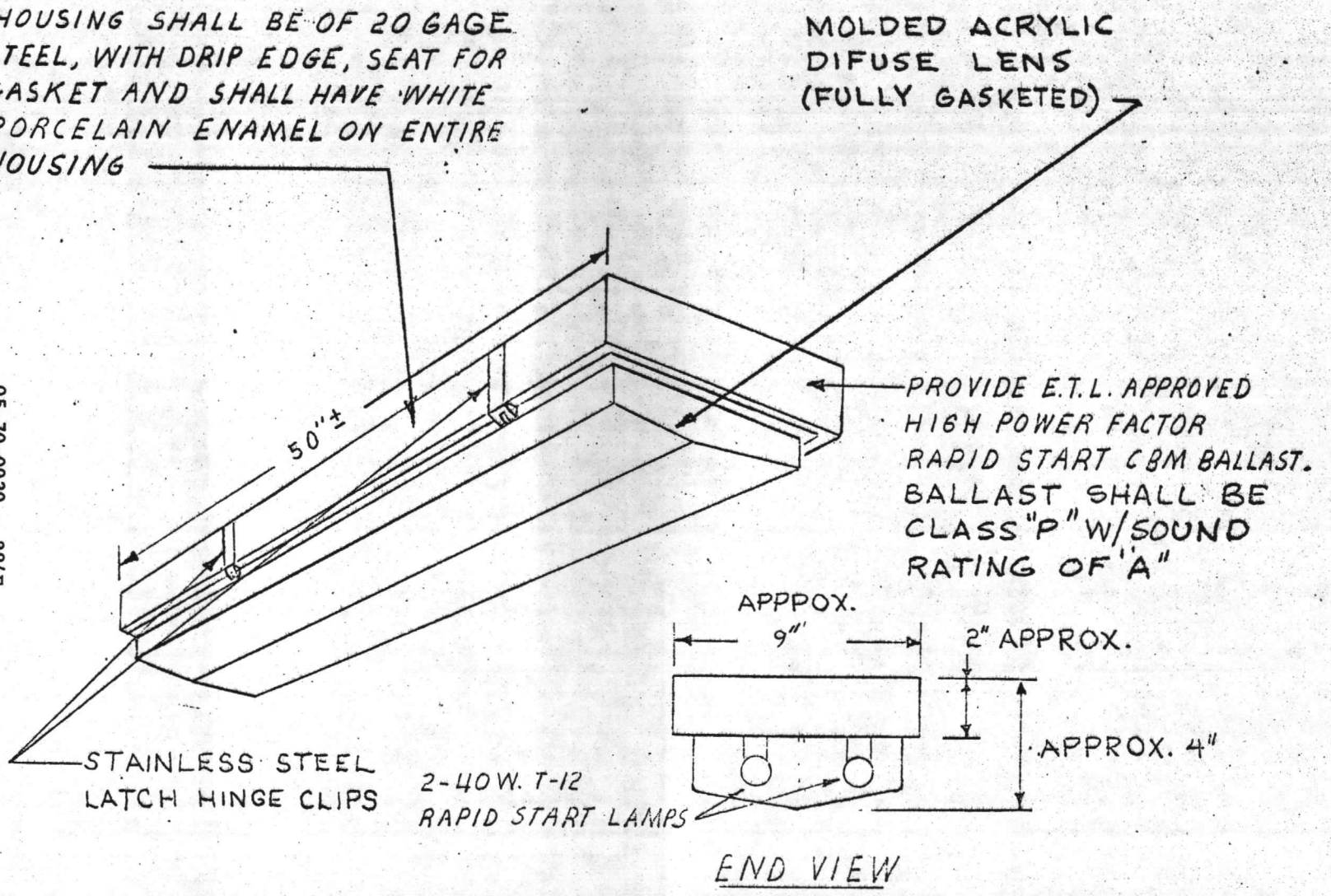

END VIEW

05-70-0939 - 284E
Section 16A

LANTDIV PLATE 16-E 3-9-70

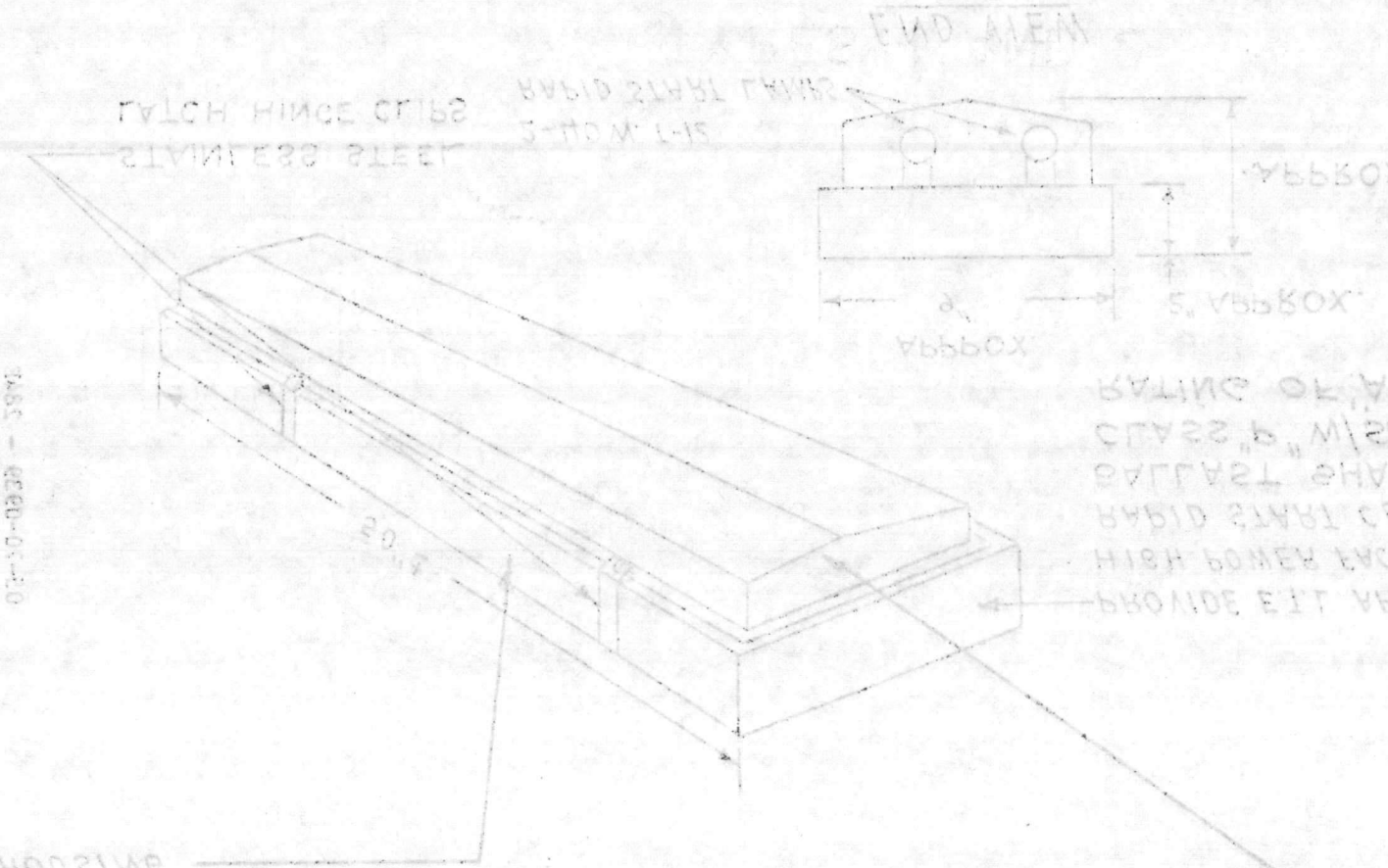

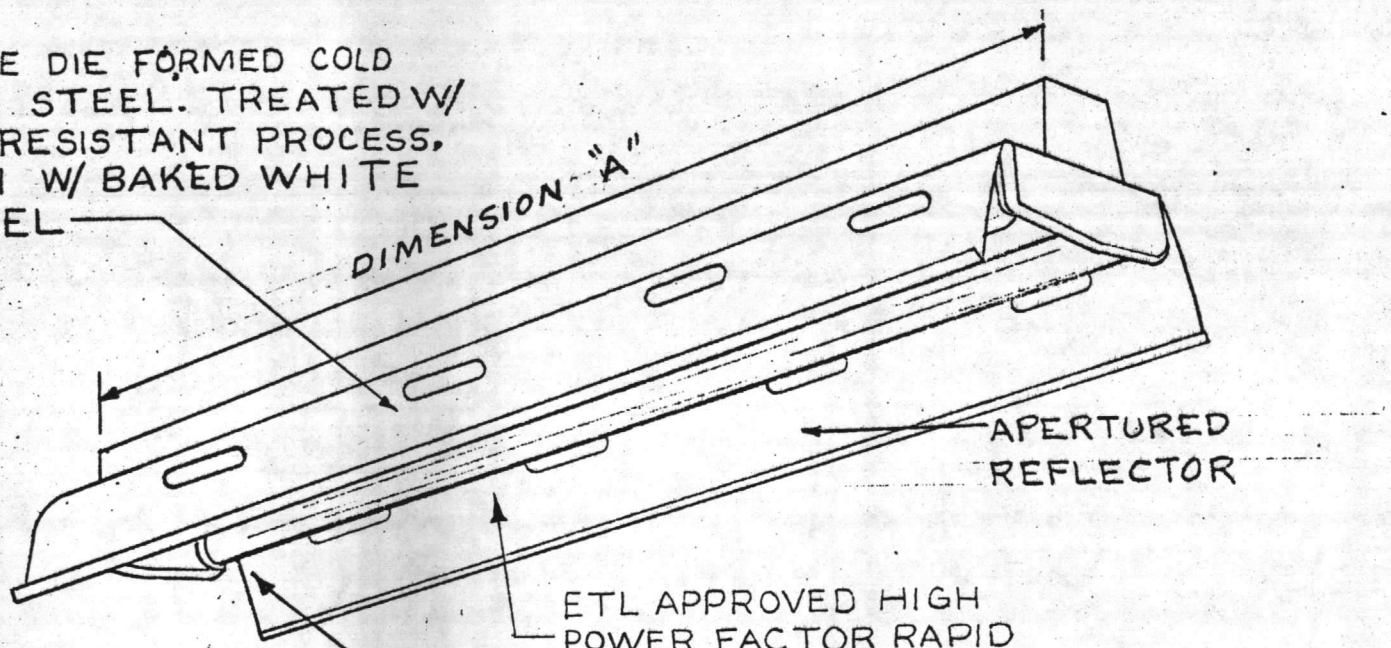

FIXTURE TYPE	LAMPS	DIMENSIONS "A"
16-F-1	2-40 W.T-12	48"
16-F-2	2-96" T-12	96"

05-70-0939 -284F
Section 16A

TYPES 1 AND 2

LANTDIV PLATE 16-F

3-9-70

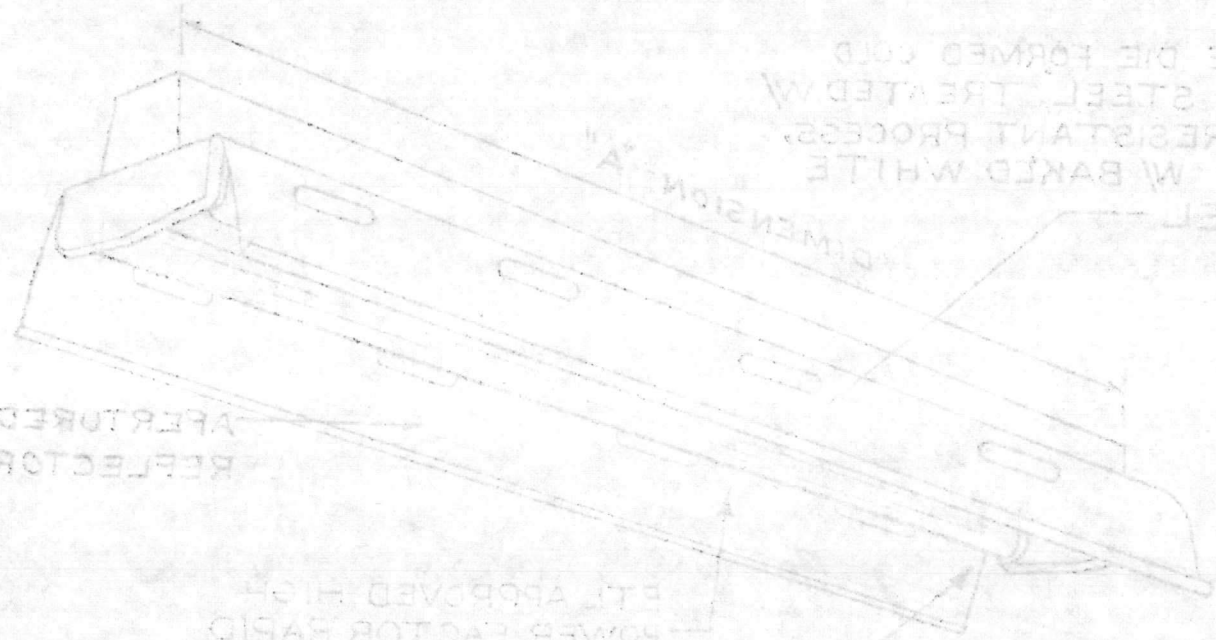

FIXTURE TYPE	LAMPS	DIMENSIONS "A"
15-F-1	2-40W.T12	4'-3"
15-F-2	2-96"T-12	96"

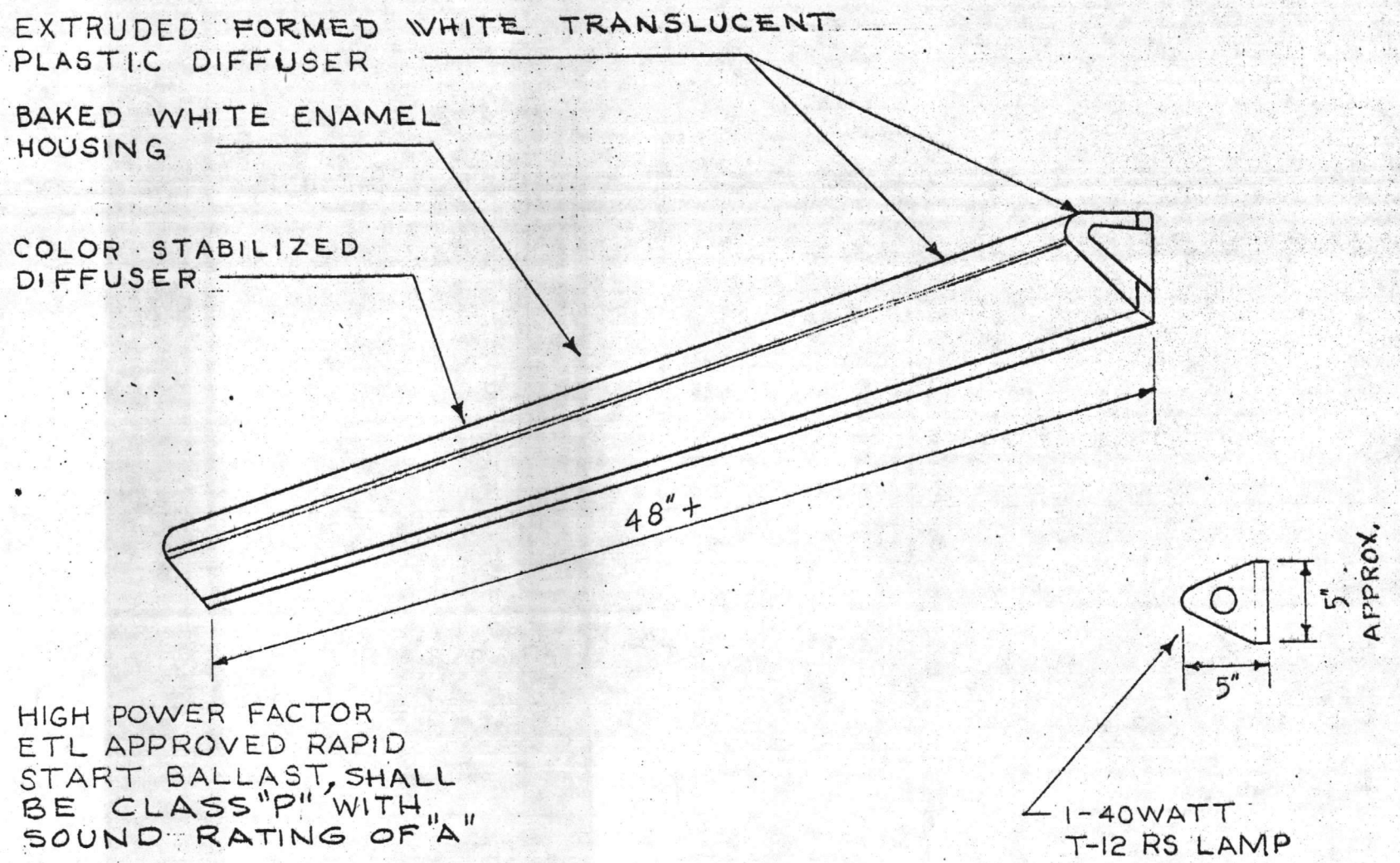

LANTDIV PLATE 16-G 3-9-70

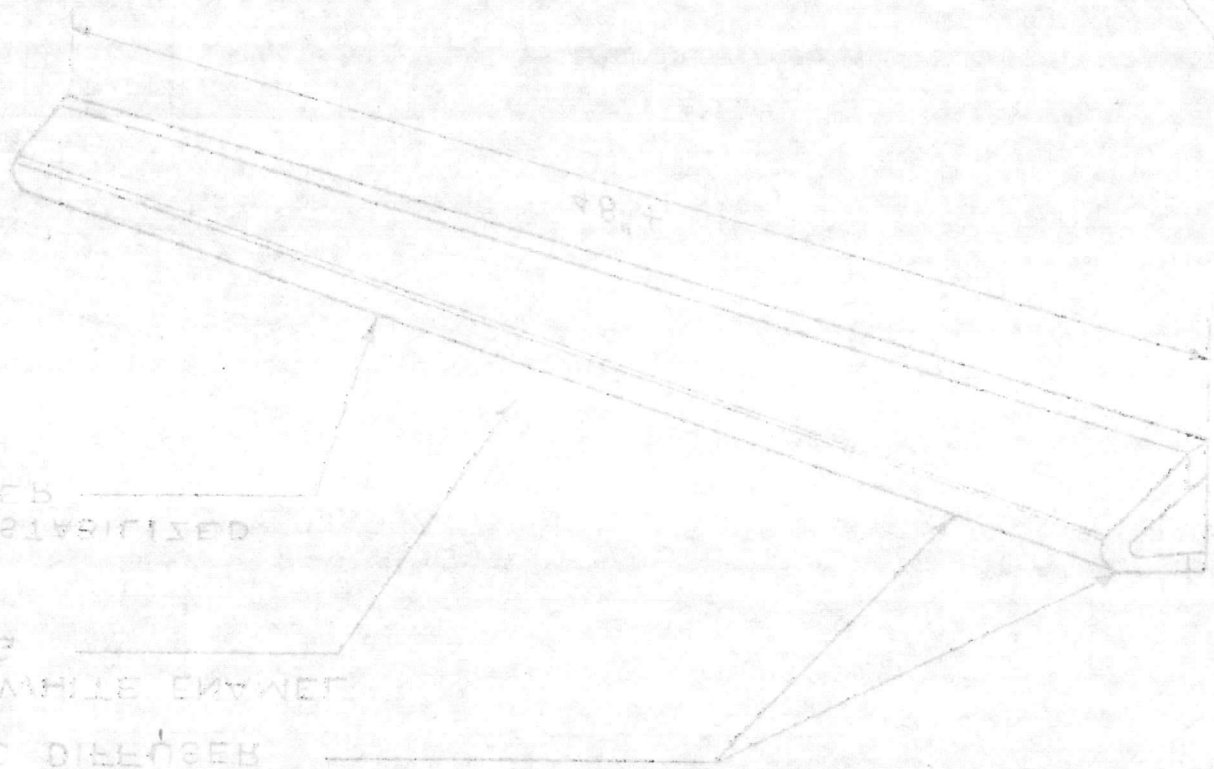

20 GAGE STEEL CHANNEL CHEMICALLY TREATED FOR RUST PREVENTION AND W/ WHITE BAKED ENAMEL FINISH TO HOUSE E.T.L. APPROVED HIGH POWER FACTOR RAPID START C.B.M. BALLASTS, SHALL BE CLASS "P" WITH SOUND RATING OF "B"

SPRING LOADED TELESCOPING SOCKETS

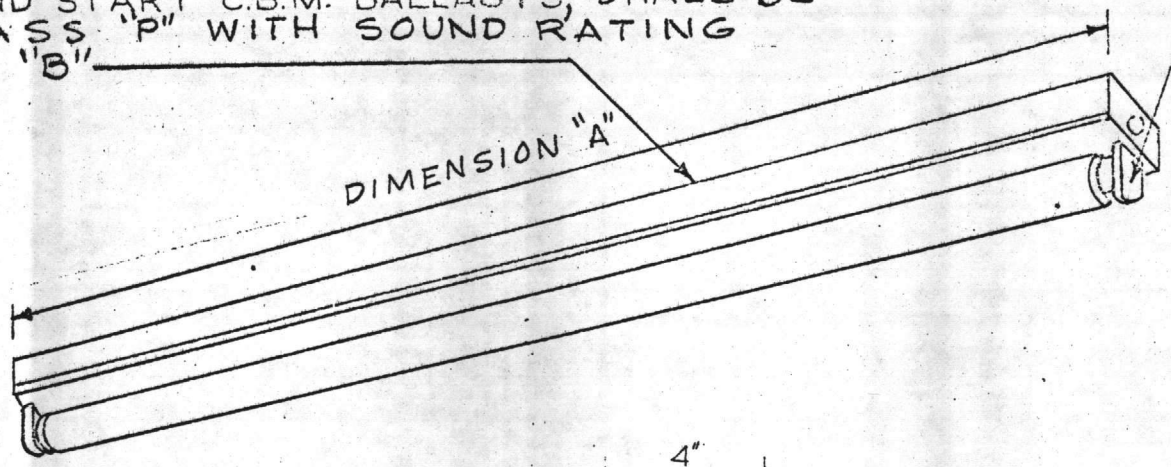

FIXTURE TYPE	LAMPS	DIMENSIONS "A"
16-H-1	1-40W.T-12	48"
16H-2	2-40WT-12	48"
16H-3	2-96" SL.	96"

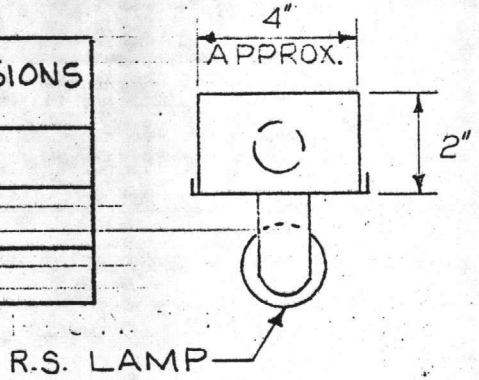

TYPE-1

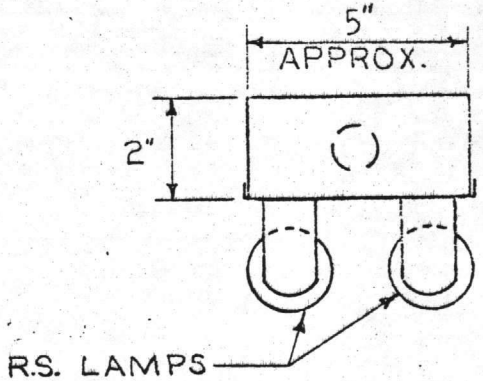

TYPES 2 & 3

TYPE 1 THRU 3

LANTDIV PLATE 16-H

3-9-70

05-70-0939 - 284H
Section 16A

FIXTURE TYPE	LAMPS	DIMENSIONS "A"
16-H-1	1-40WT12	48"
16-H-2	2-40WT12	48"
16-H-3	2-96" SL	96"

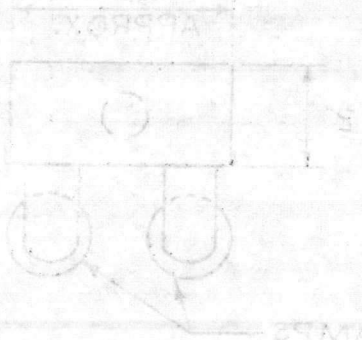

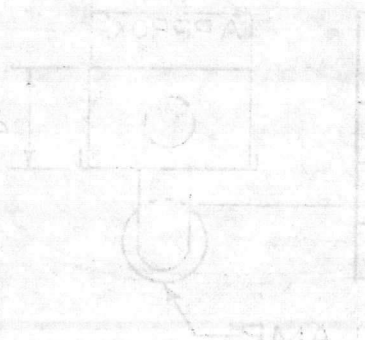

TYPE 1

TYPES 2 & 3

TYPE 1 THRU 3

LAUNDRY PLATE 16-H

NOTE:
FIXTURE SCHEDULE INDICATES TYPE OF MOUNTING, OUTLET BOX, HOOK, ETC. DETAIL MOUNTING DEVICE IS DETAILED ON DRAWINGS.

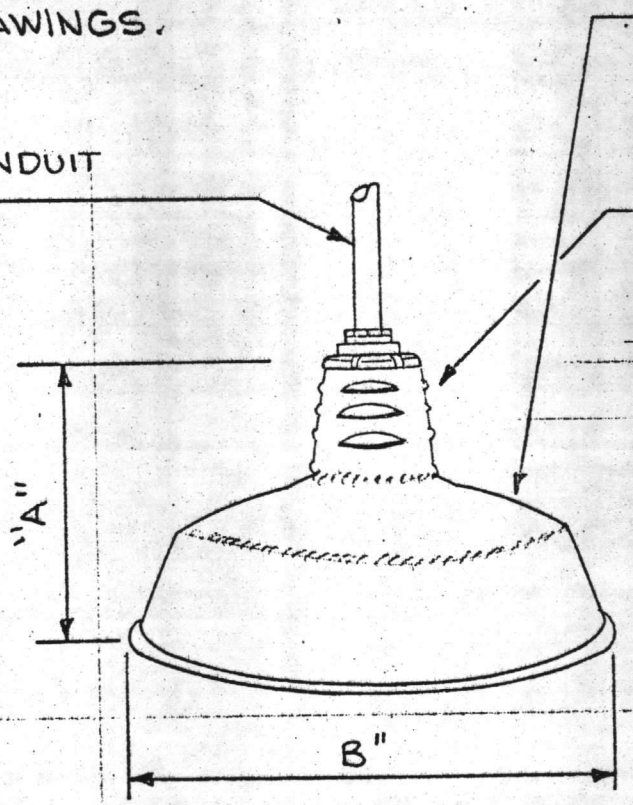

FIXTURE TYPE	LAMPS	DIMENSIONS	
		"A"	"B"
16-I-1	1-150 W.	9"	14"
16-I-2	1-200 W.	10"	16"
16-I-3	1-300 W.	12"	18"

TYPE I THRU 3

LANTDIV PLATE 16-I

3-9-70

FIXTURE TYPE	LAMPS	DIMENSIONS	
		A	B
16-T1	1-150W	9"	14"
16-T2	1-250W	13"	16"
16-T3	1-300W	12"	15"

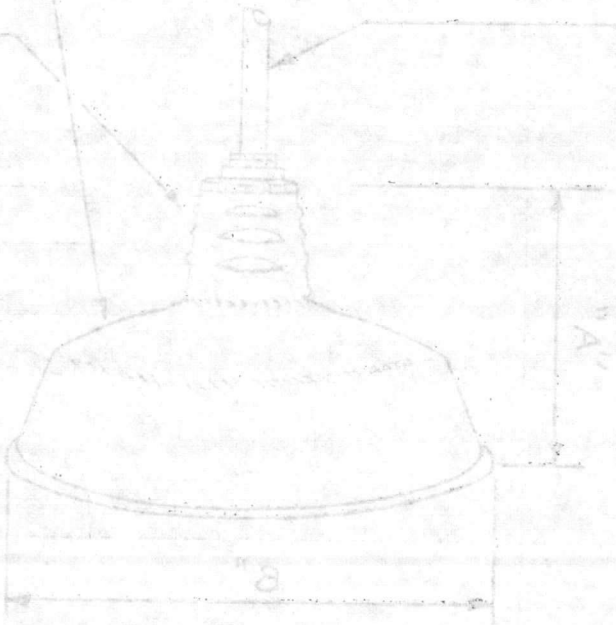

TYPE 1 THRU 3

LANTDIV PLATE 16-1

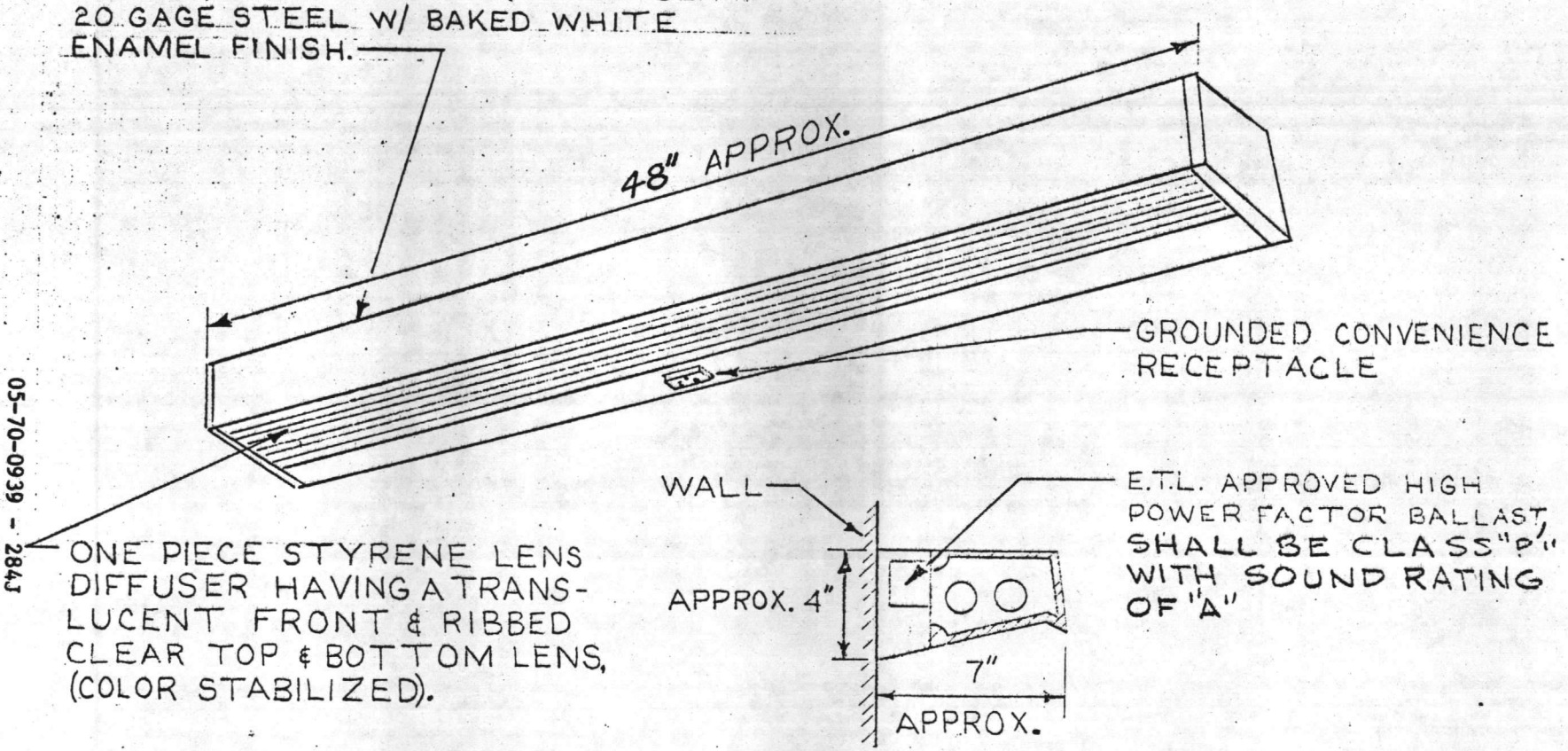

LANTDIV PLATE 16 -J

3-9-70

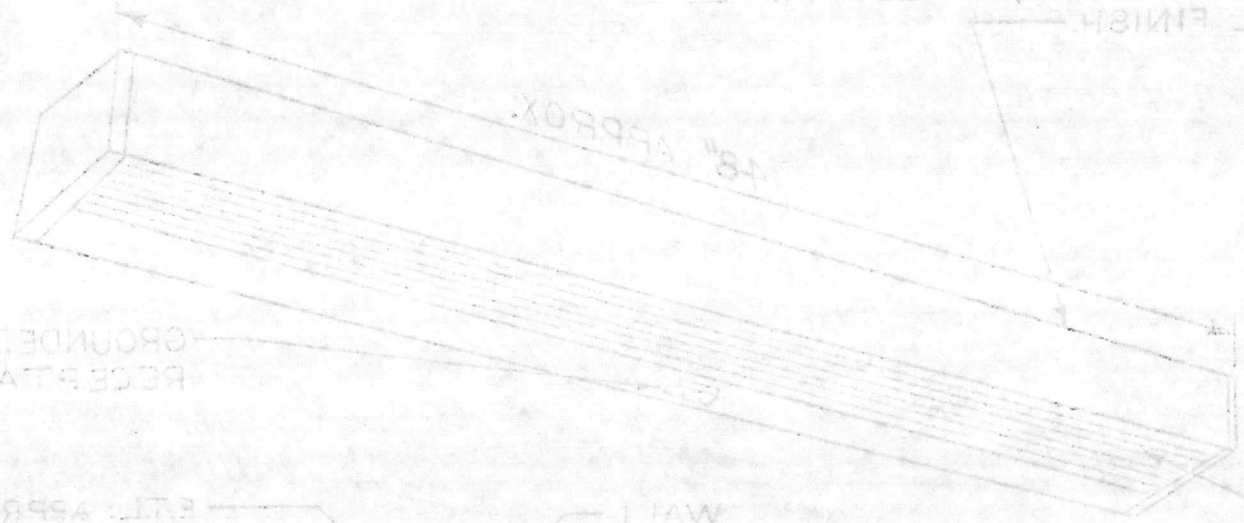

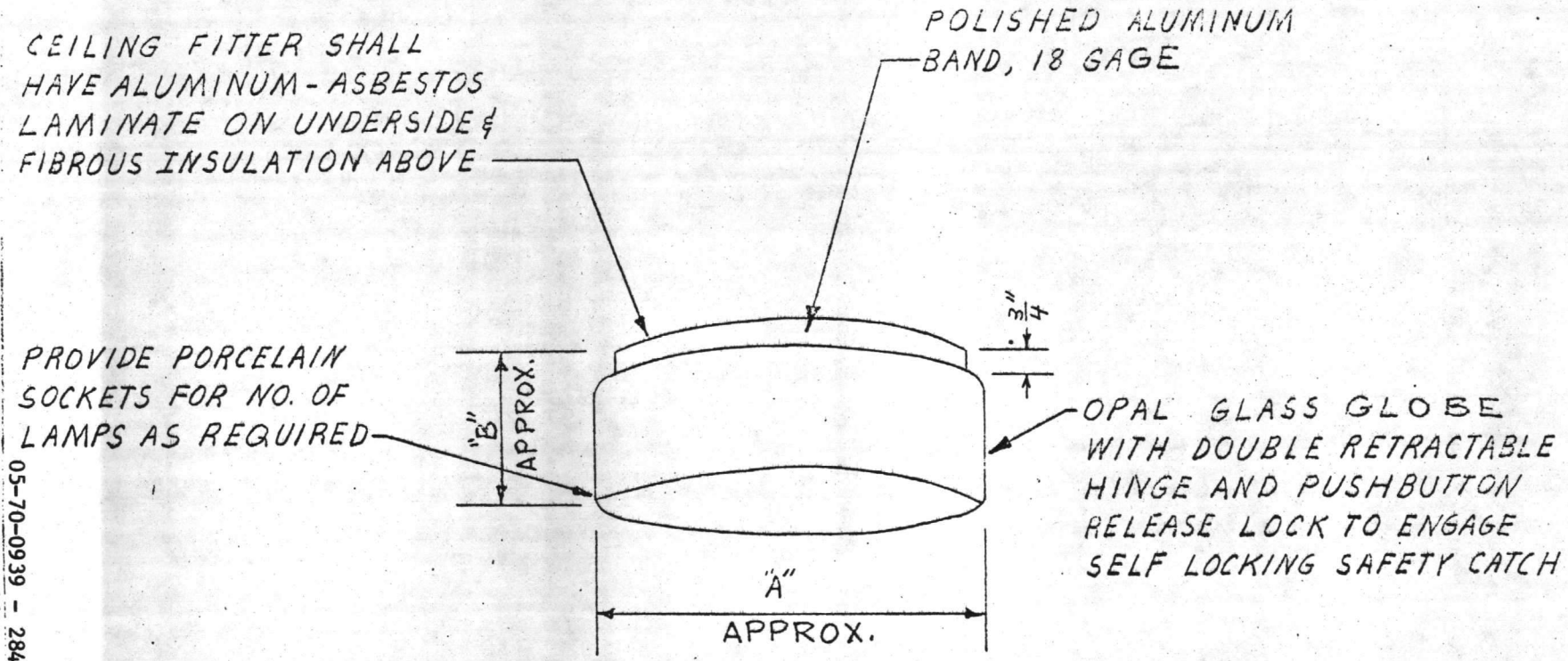

FIXTURE TYPE	LAMPS	DIMENSIONS "A"	DIMENSIONS "B"
16-K-1	2-40	9"	5"
16-K-2	2-60	9"	5"
16-K-3	2-75	12"	5 1/2"
16-K-4	2-100	14"	6"
16-K-5	3-100	16"	7"

MAINTENANCE FACTOR	GOOD	FAIR
	.85	.75

TYPE 1 THRU 5

LANTDIV PLATE 16-K 3-9-70

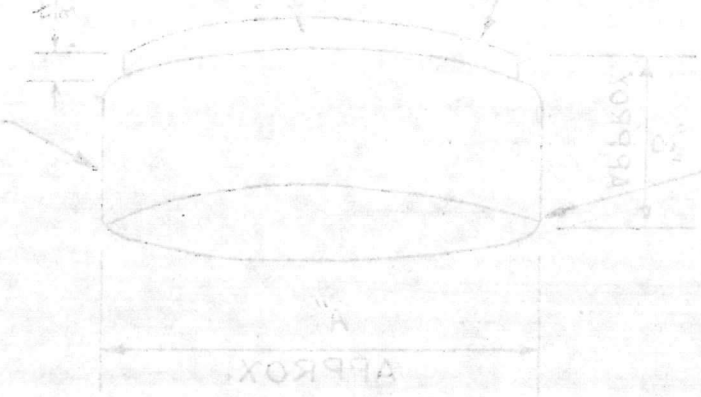

FIXTURE TYPE	LAMPS	DIMENSIONS A	DIMENSIONS B
16-K-1	2-40	9"	5"
16-K-2	2-60	9"	5"
16-K-3	2-75	12"	5½"
16-K-4	2-100	14"	6"
16-K-5	3-100	16"	7"

MAINTENANCE FACTOR	GOOD .85	FAIR .75

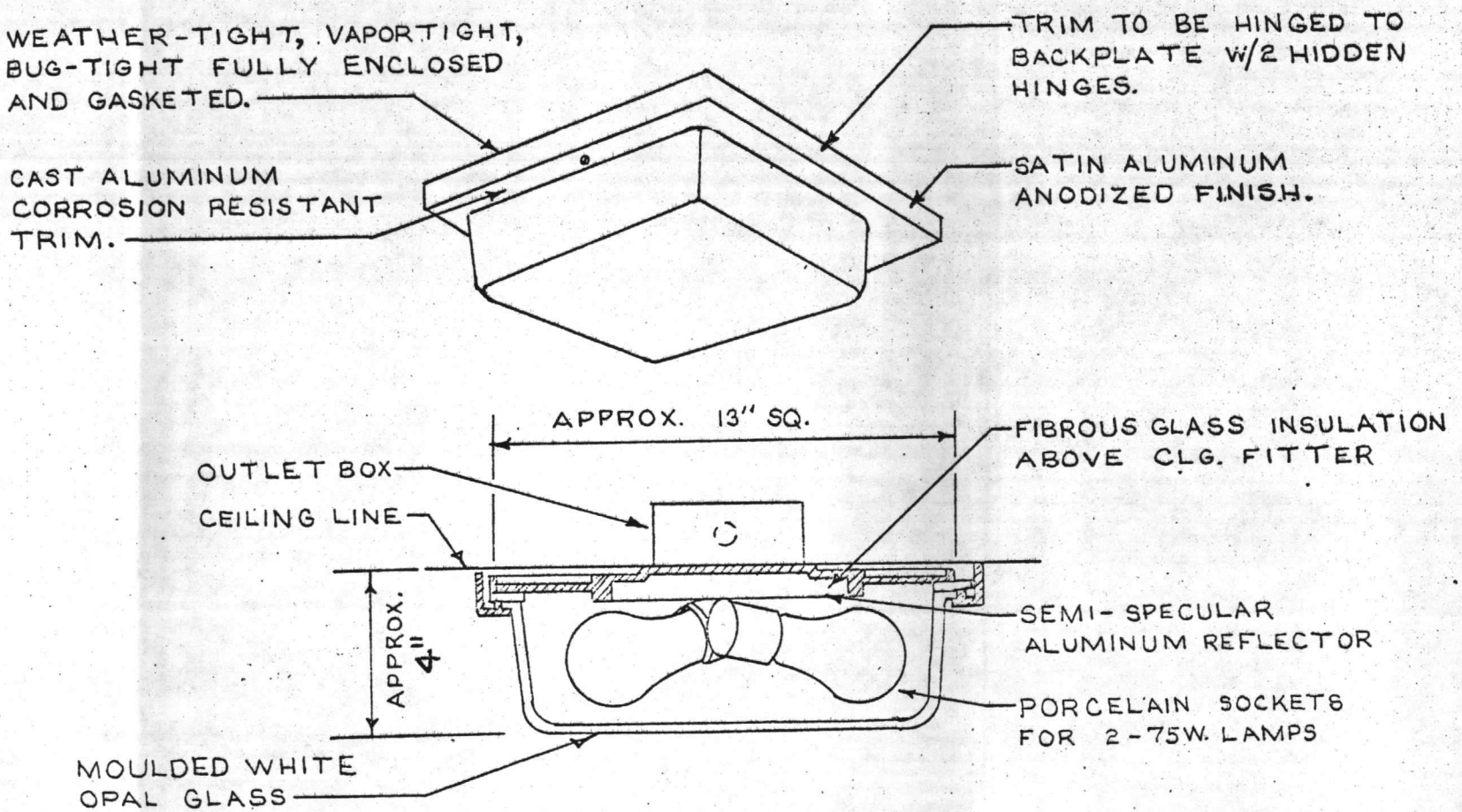

LANTDIV PLATE 16-L 3-9-70

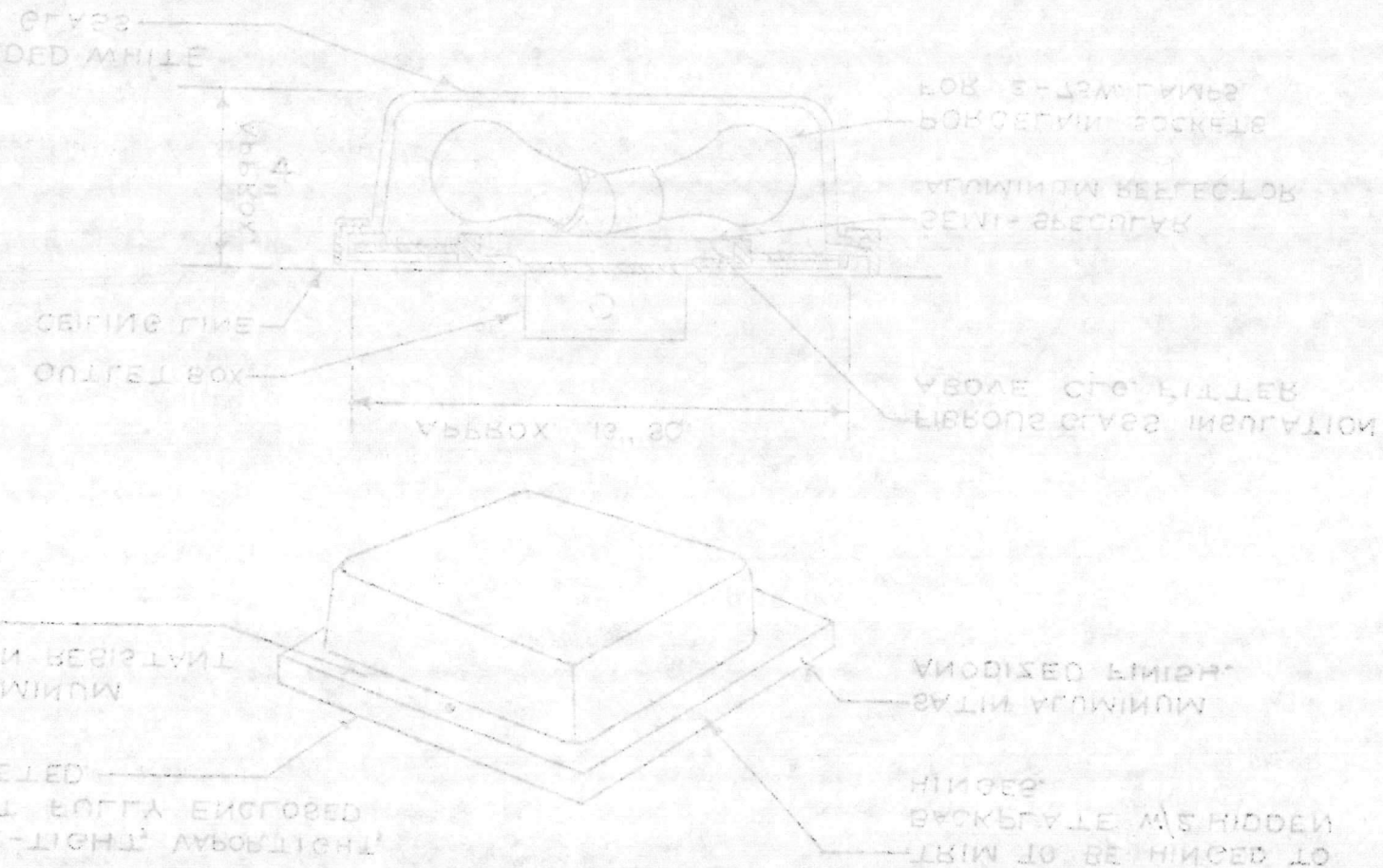

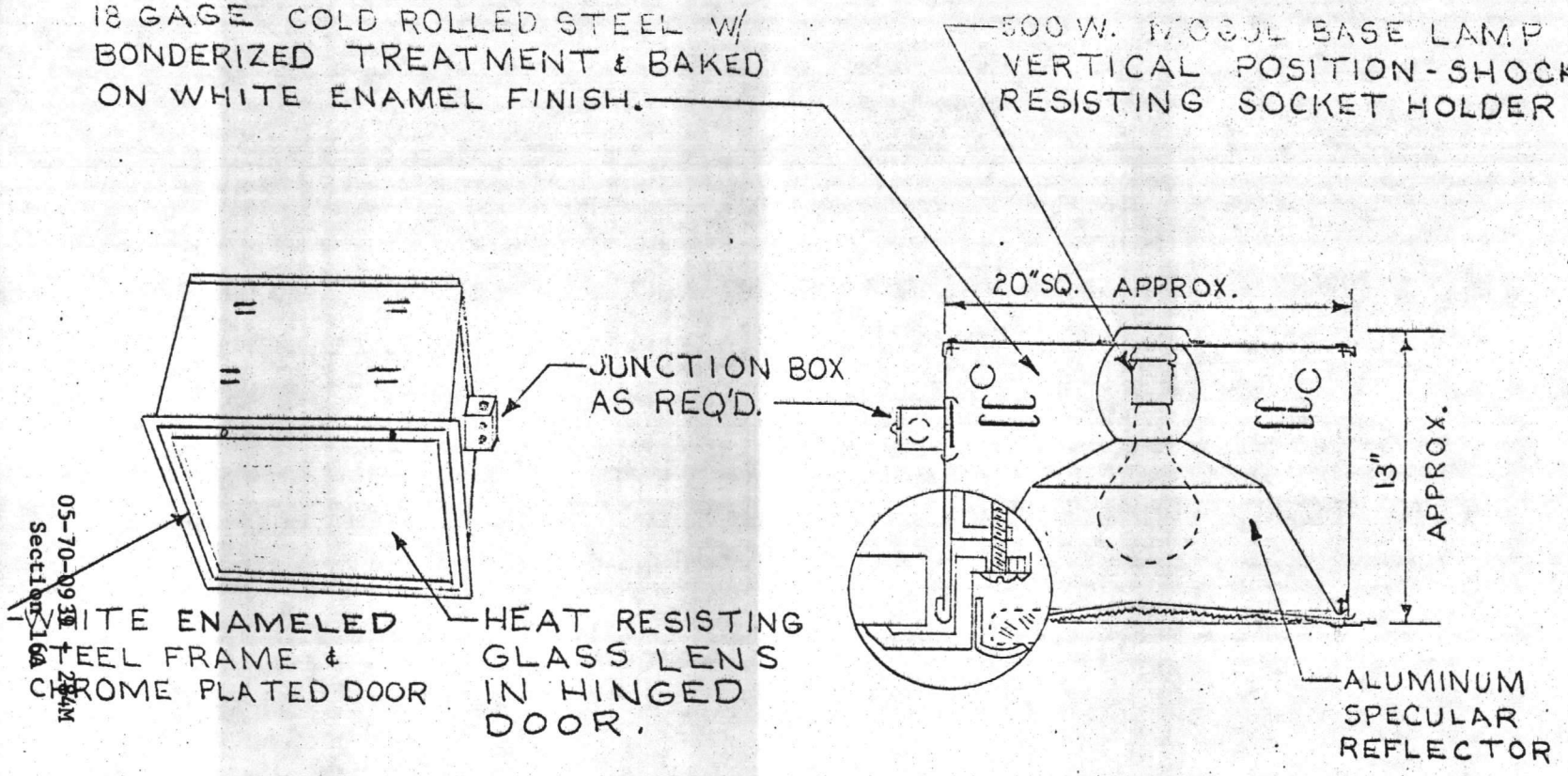

05-70-0931 - 284M
Section 16A

LANTDIV PLATE 16-M

3-9-70

LAUNDRY PLATE 16-M

20 GAGE COLD ROLLED STEEL WITH BONDERIZED TREATMENT & BAKED ON WHITE ENAMEL FINISH.

ONE PIECE ALUM. CASTING, HINGED & SECURED W/ TWO CAPTIVE SCREWS. FACE PLATE TO HAVE SATIN ALUM. BAKED ON CLEAR LAQUER FINISH.

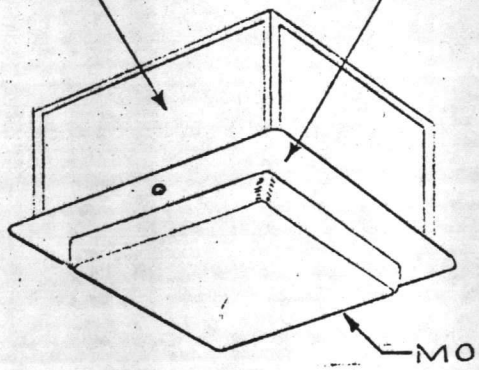

MOULDED DROP OPAL GLASS

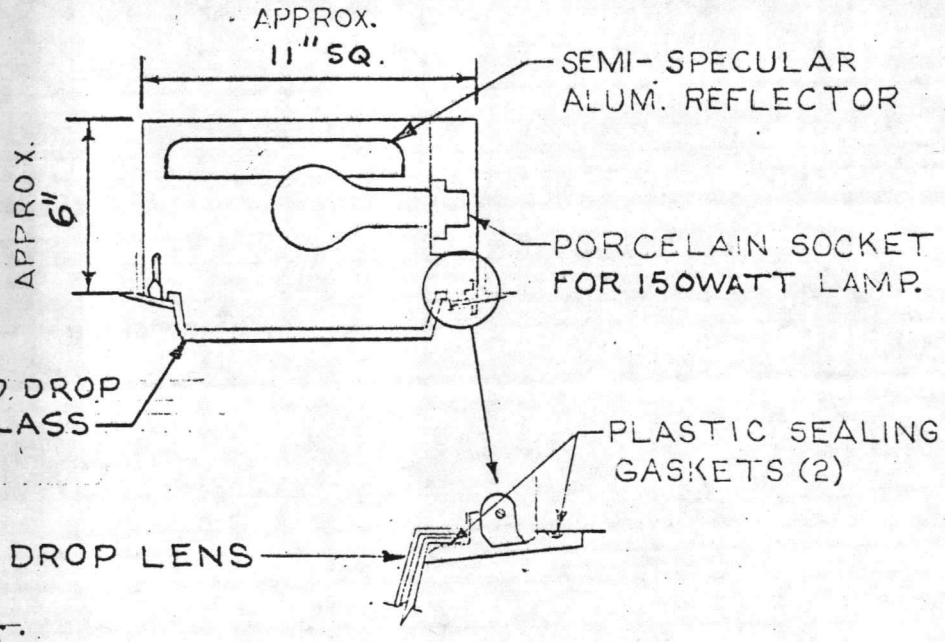

TYPE-1

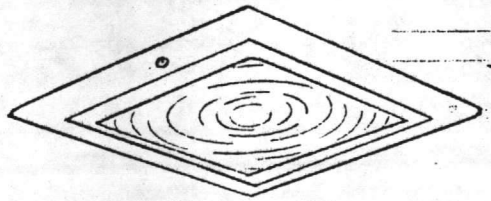

NOTE:
TYPE 2 SAME AS TYPE 1, EXCEPT SHALL HAVE FLAT FRESNEL LENS.

TYPE-2

LANTDIV PLATE 16-N 3-9-70

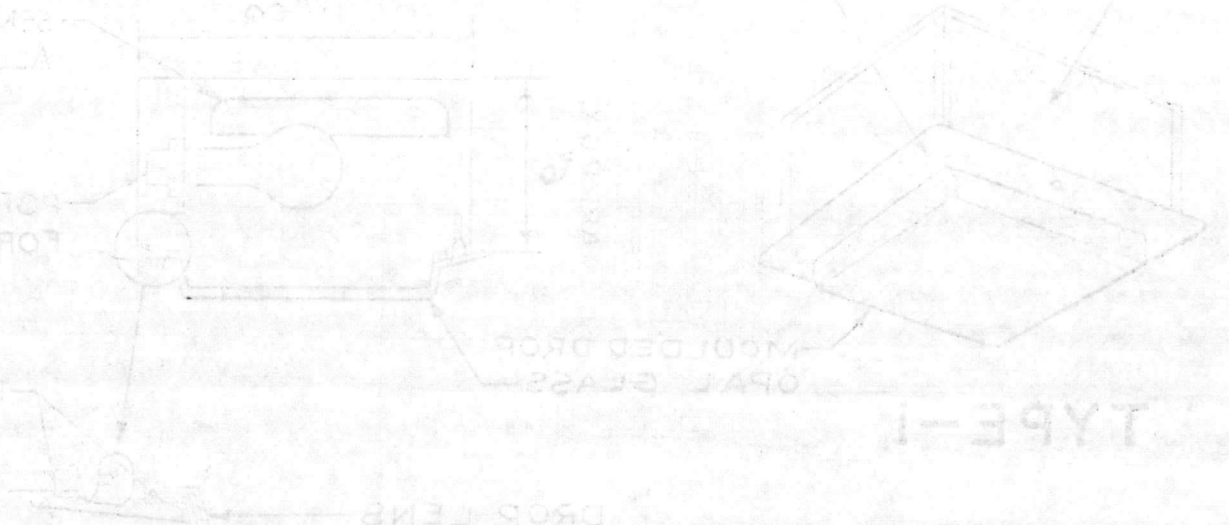

TYPE-1

TYPE-2

FIXTURE TYPE	LAMP WATTAGE	APPROXIMATE DIMENSIONS	
		"A"	"B"
16-0-1	1-175 WATT	19"	20"
16-0-2	1-250 WATT	19"	20"
16-0-3	1-400 WATT	21"	26"
16-0-4	1-1000 WATT	21"	30"

NOTE: ALL LAMPS SHALL BE COLOR IMPROVED MERCURY VAPOR.

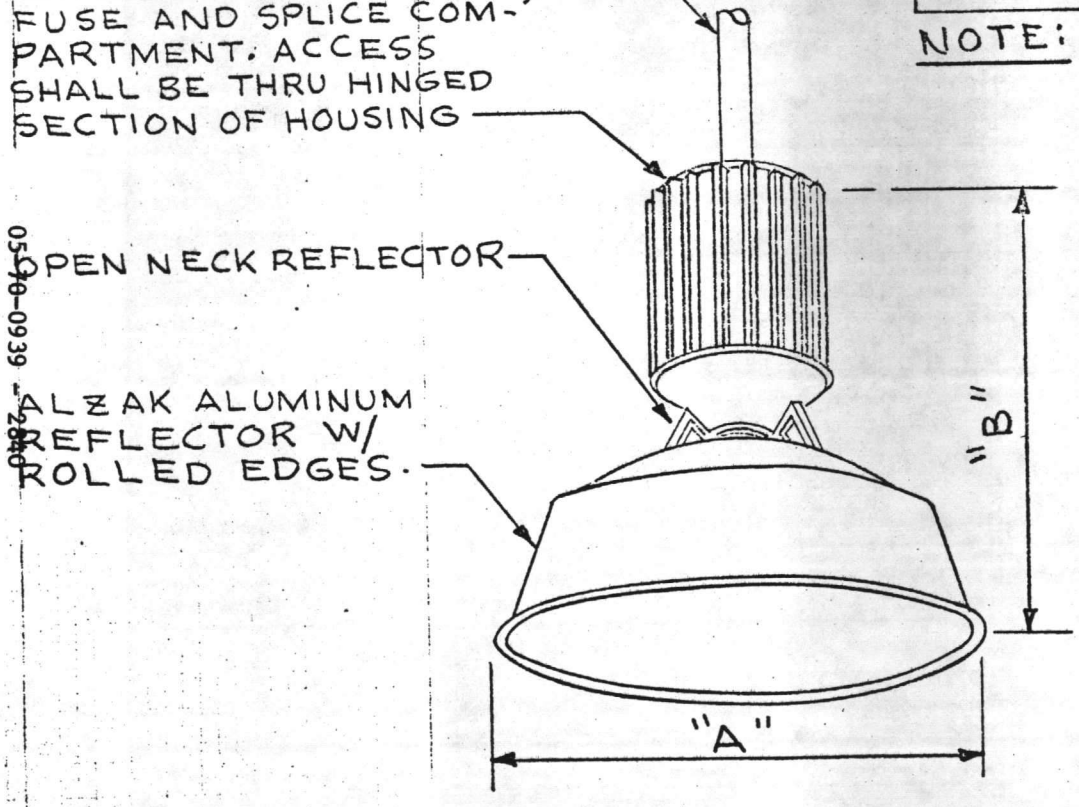

NOTE:
SEE FIXTURE SCHEDULE FOR BALLAST TYPE AND VOLTAGE RANGE, AND TYPE OF MOUNTING. TYPE OF HANGING DEVICE, OUTLET BOX, HOOK, OR LOWERING DEVICE ETC. AS DETAILED ON DRAWINGS.

TYPE 1 THRU 4

LANTDIV PLATE 16-0

3-9-70

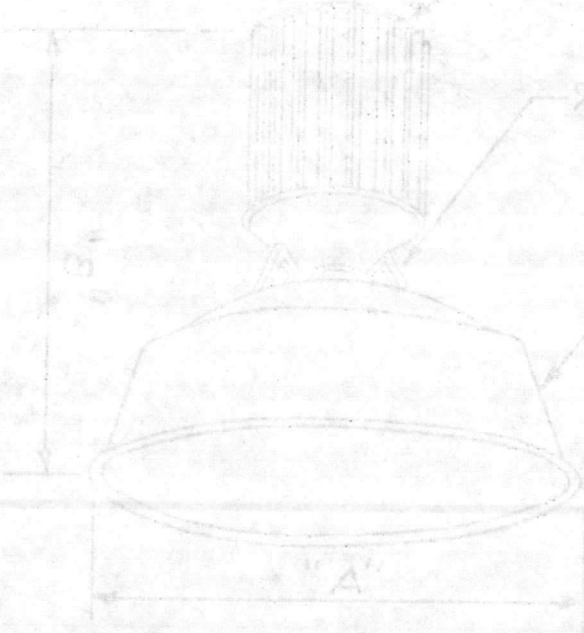
"A"

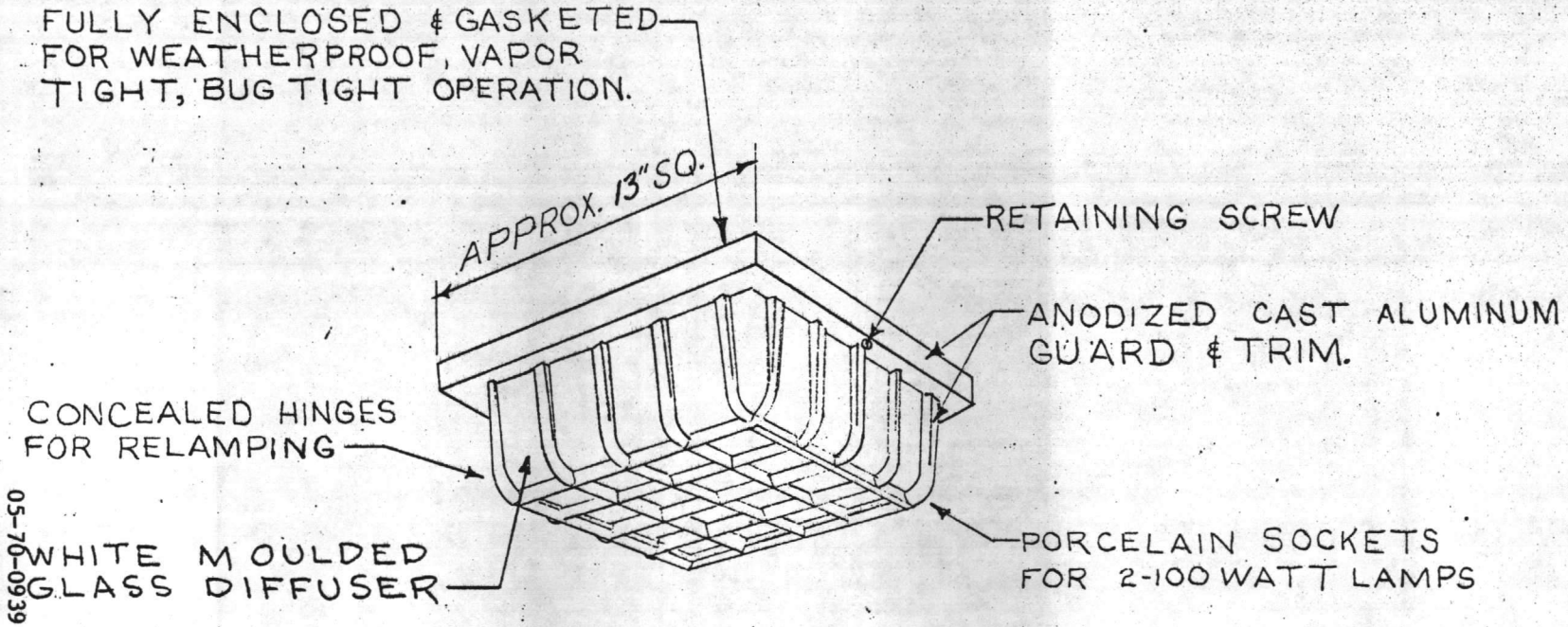

LANTDIV PLATE 16-P 3-9-70

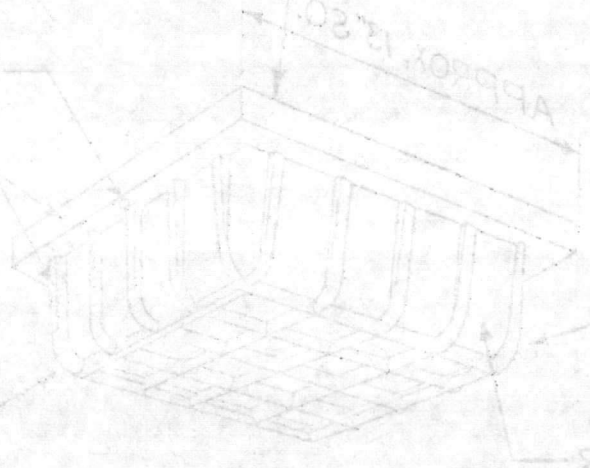

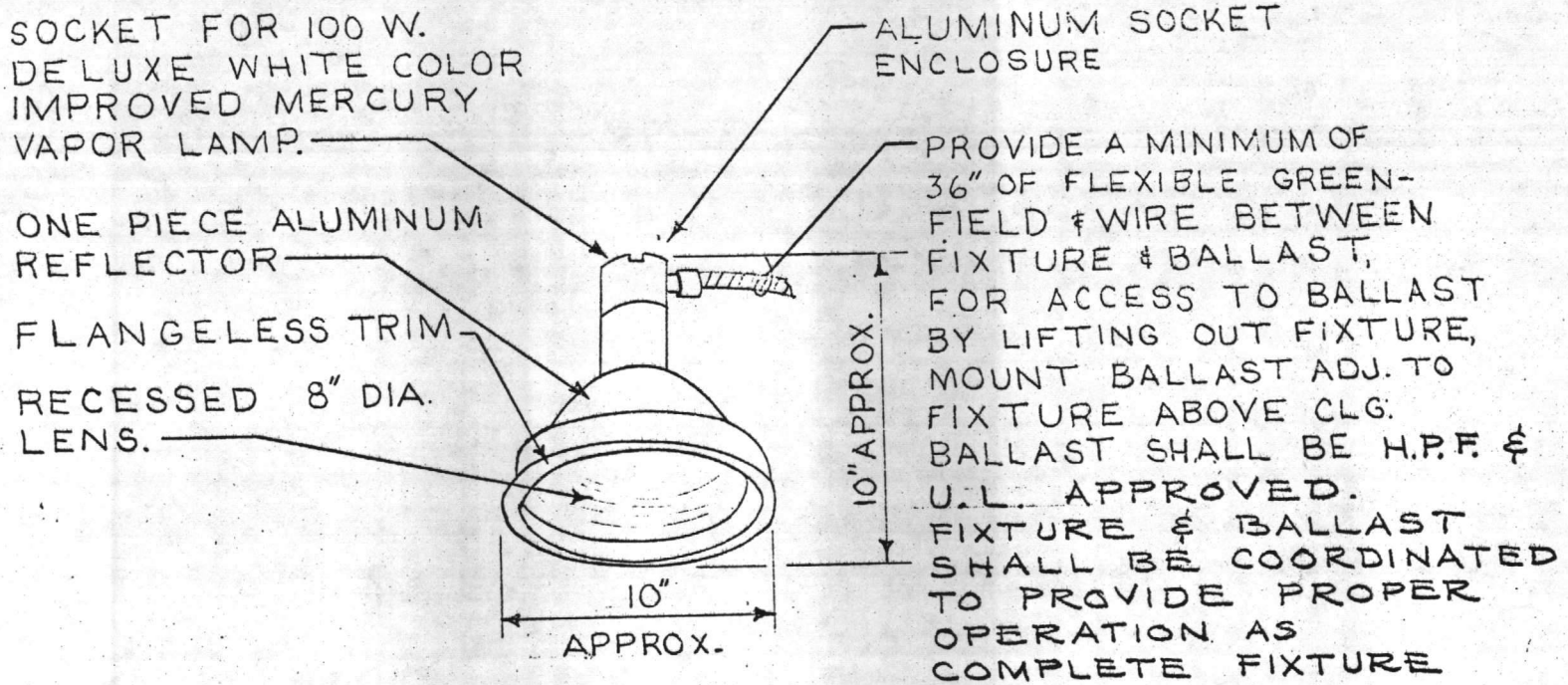

05-70-0939 - 2840
Section 16A

LANTDIV PLATE 16-Q 3-9-70

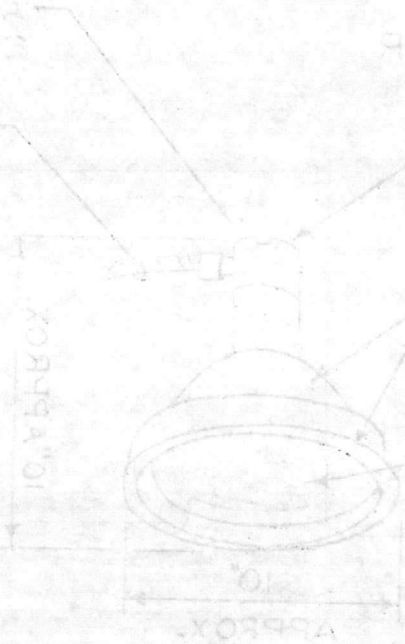

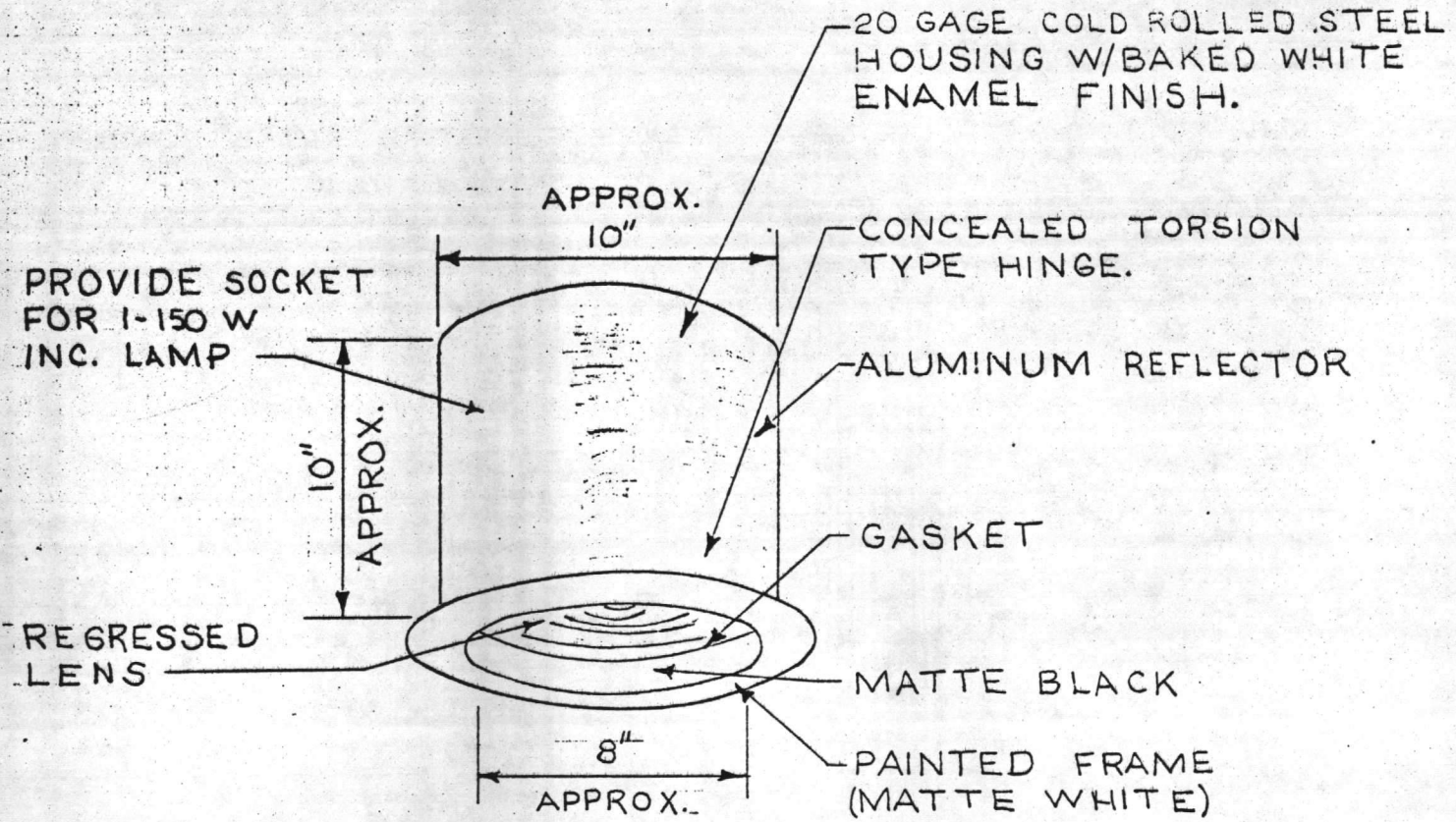

LANTDIV PLATE 16-R 3-9-70

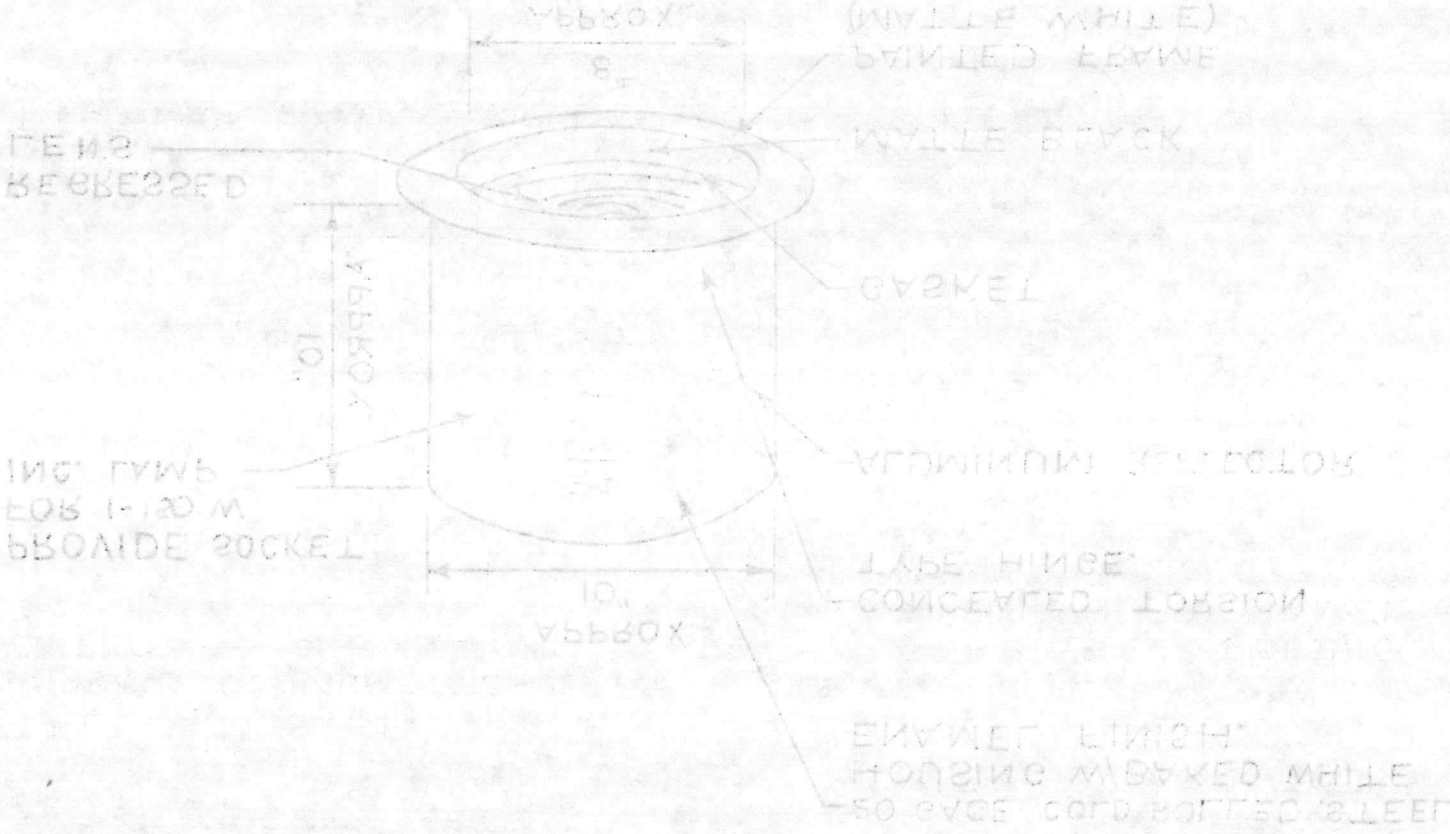

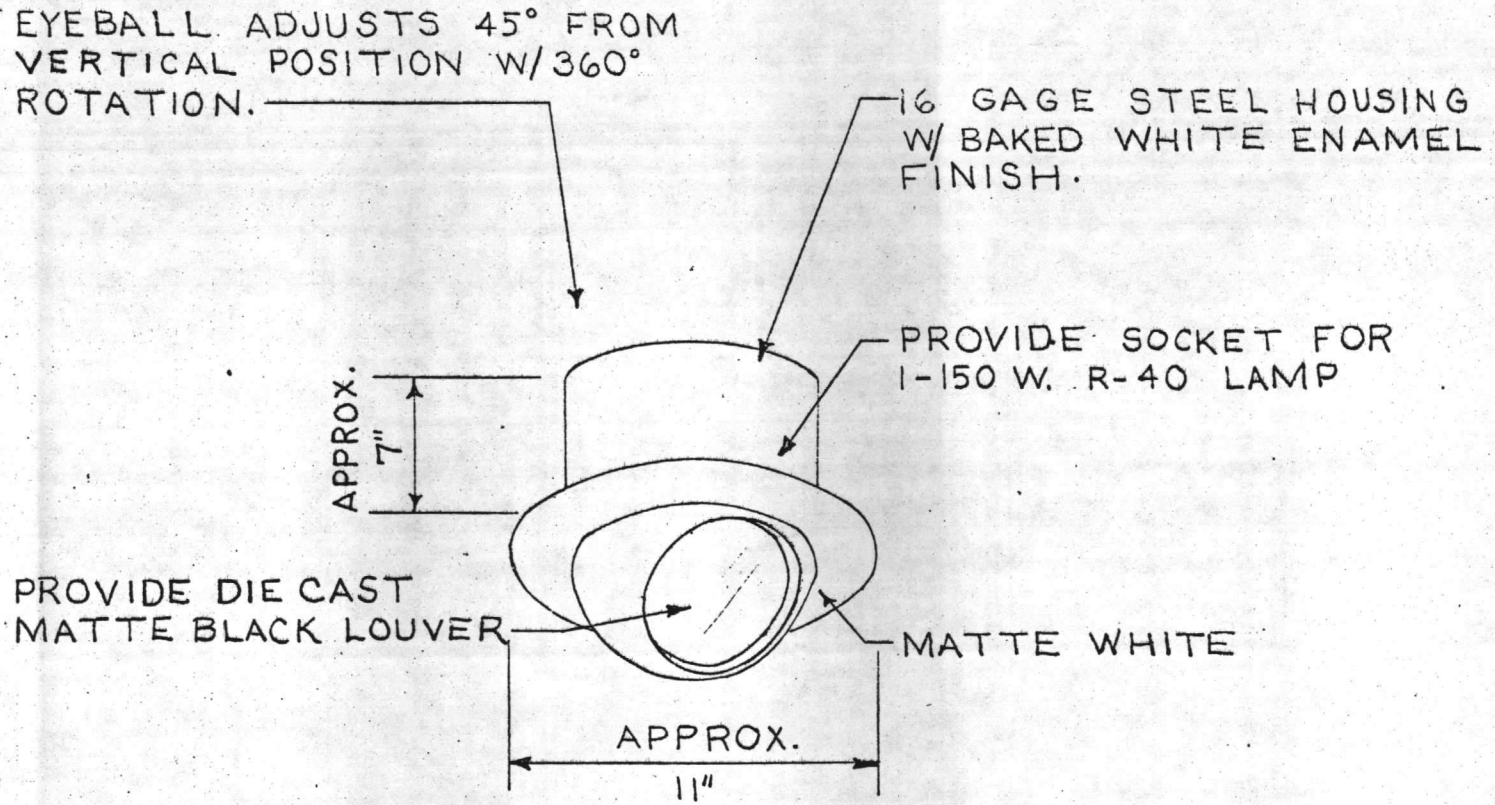

05-70-0939 - 284S
Section 16A

LANTDIV PLATE 16-S 3-9-70

APPROX.
L
APPROX.
H

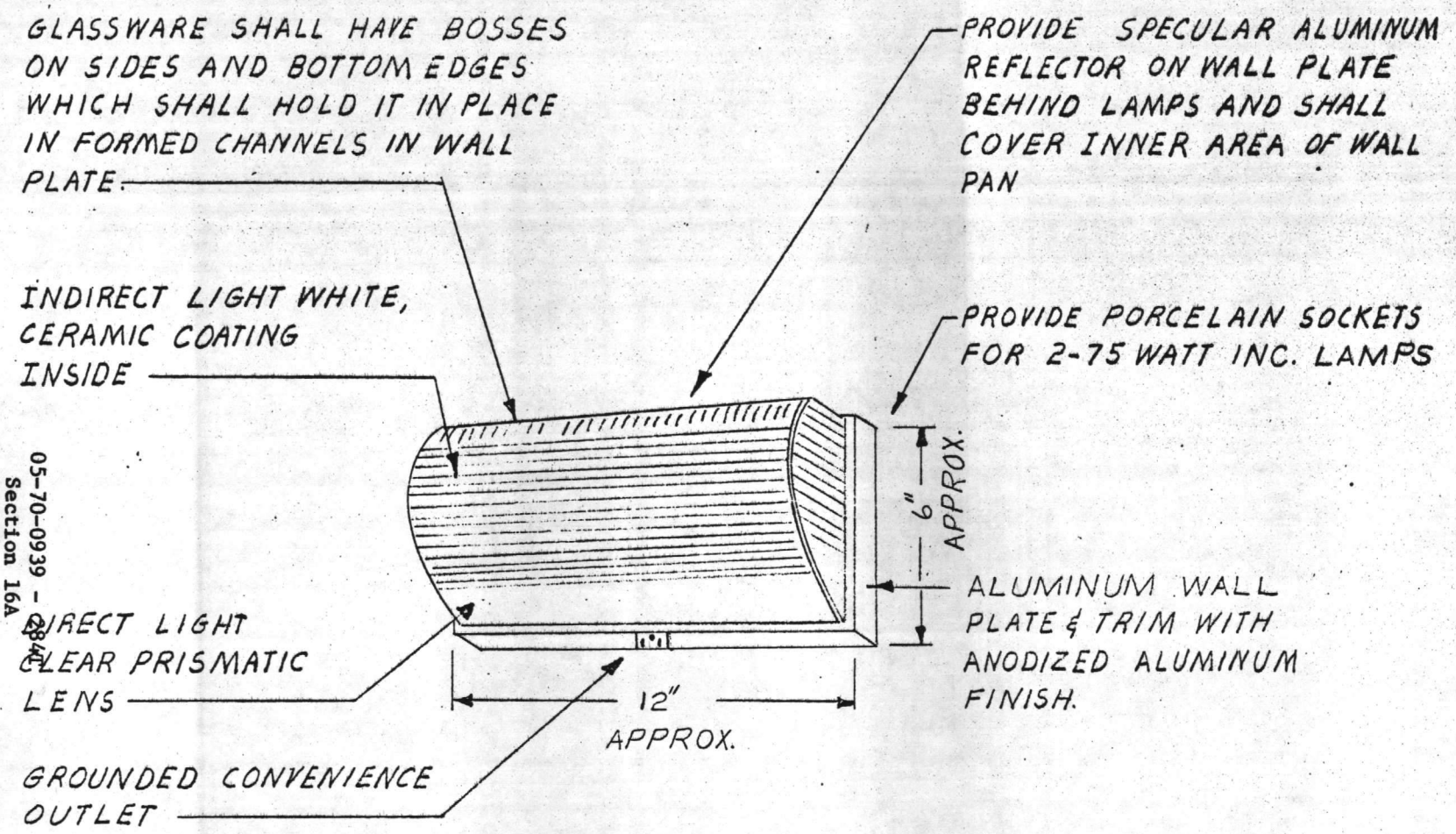

05-70-0939 - 0844
Section 16A

LANTDIV PLATE 16-T 3-9-70

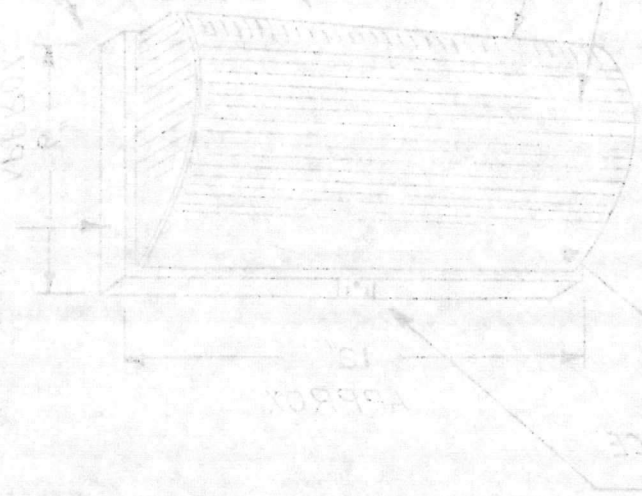

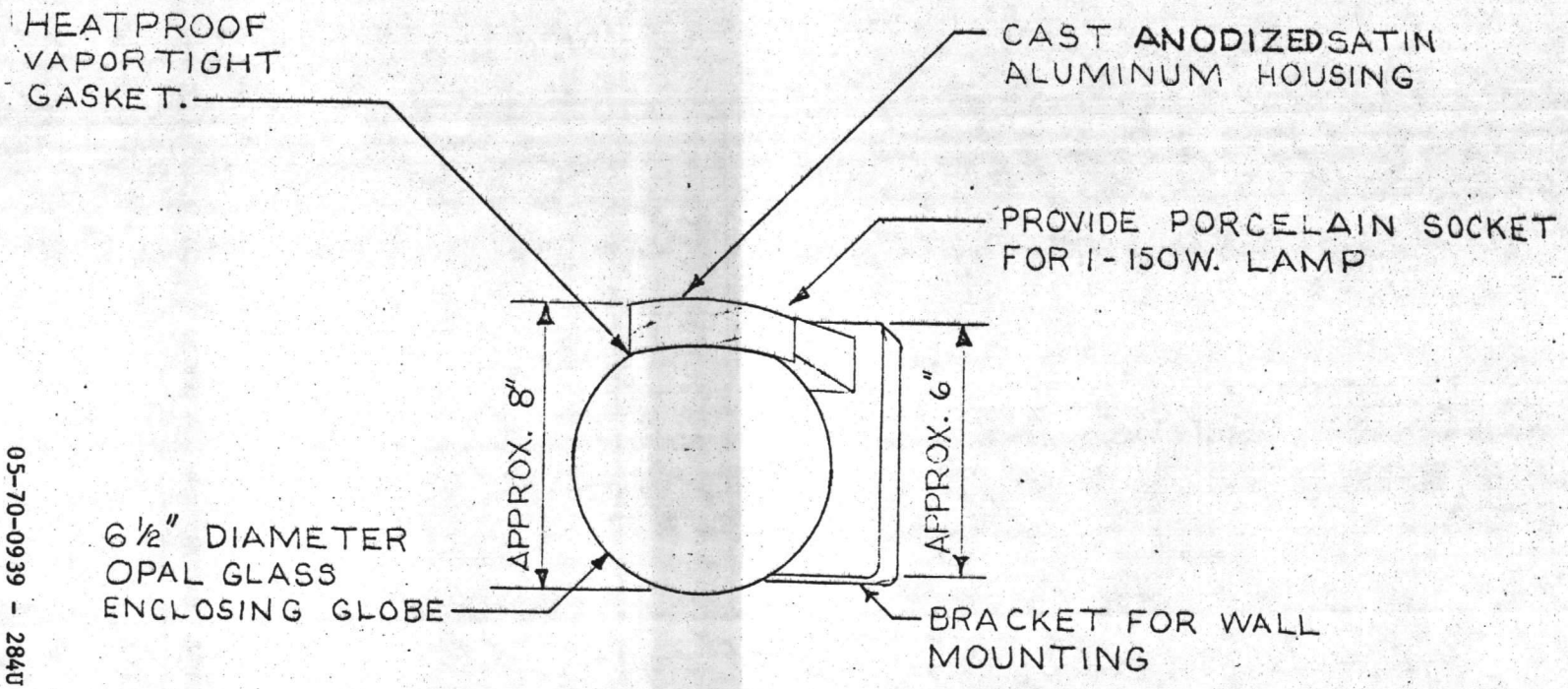

05-70-0939 - 284U
Section 16A

LANTDIV PLATE 16-U 3-9-70

LANTDIV PLATE 15-U 8-3-70

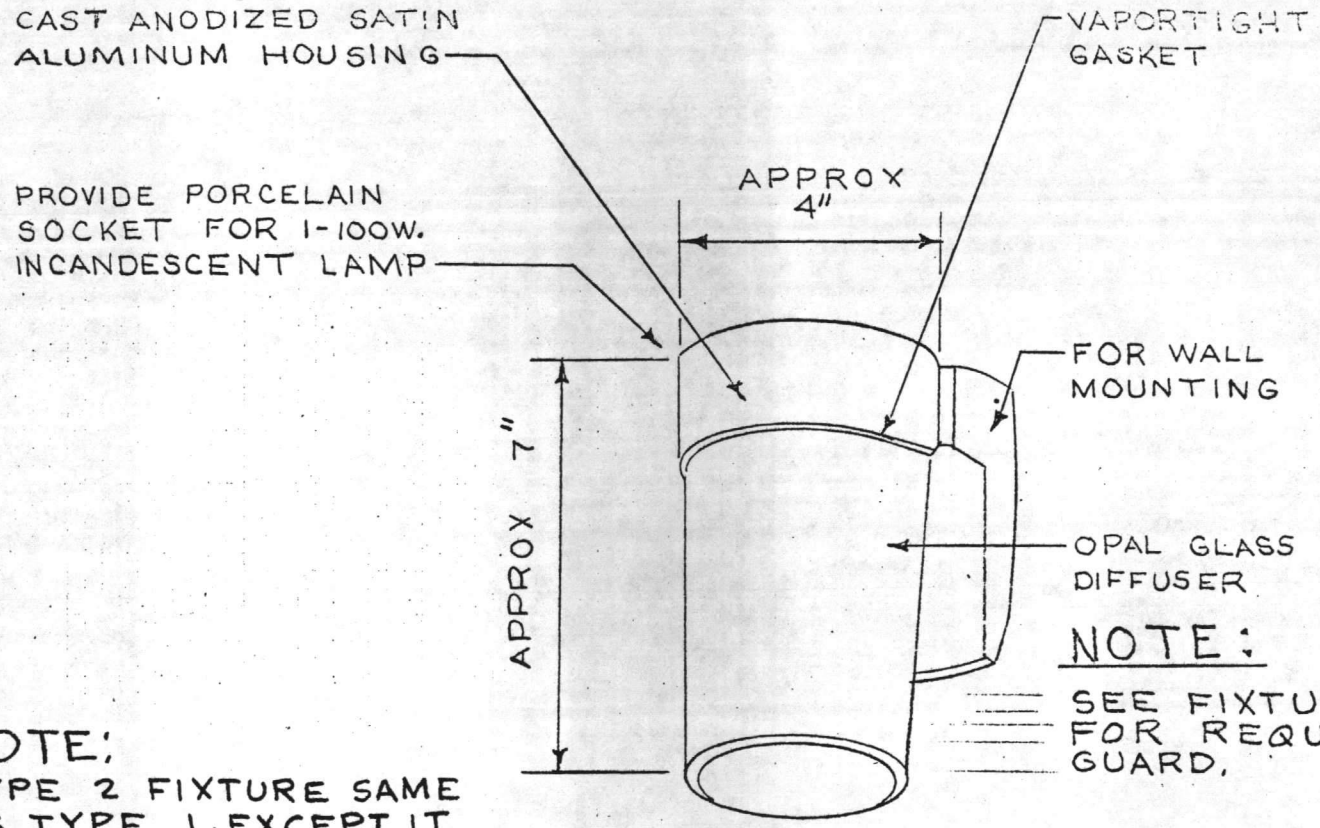

NOTE:
TYPE 2 FIXTURE SAME AS TYPE 1, EXCEPT IT SHALL BE FOR CLG. MT'G.

TYPE-2
CLG. TYPE

TYPE-1

LANTDIV PLATE 16-V 3-9-70

TYPE-1

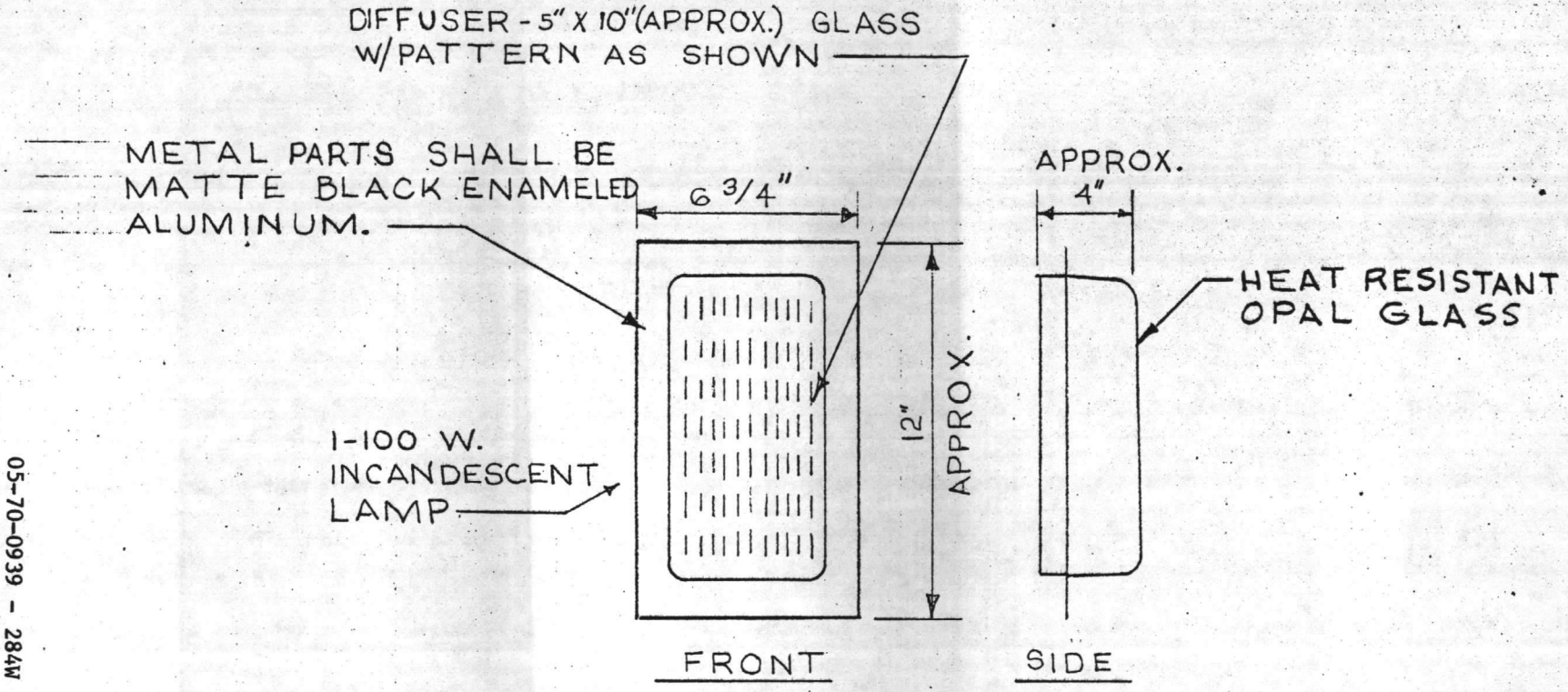

05-70-0939 - 284W
Section 16A

LANTDIV PLATE 16-W 3-9-70

APPROX
4"
HEAT RESISTANT
OPAL GLASS
APPROX
6"
SIDE
FRONT

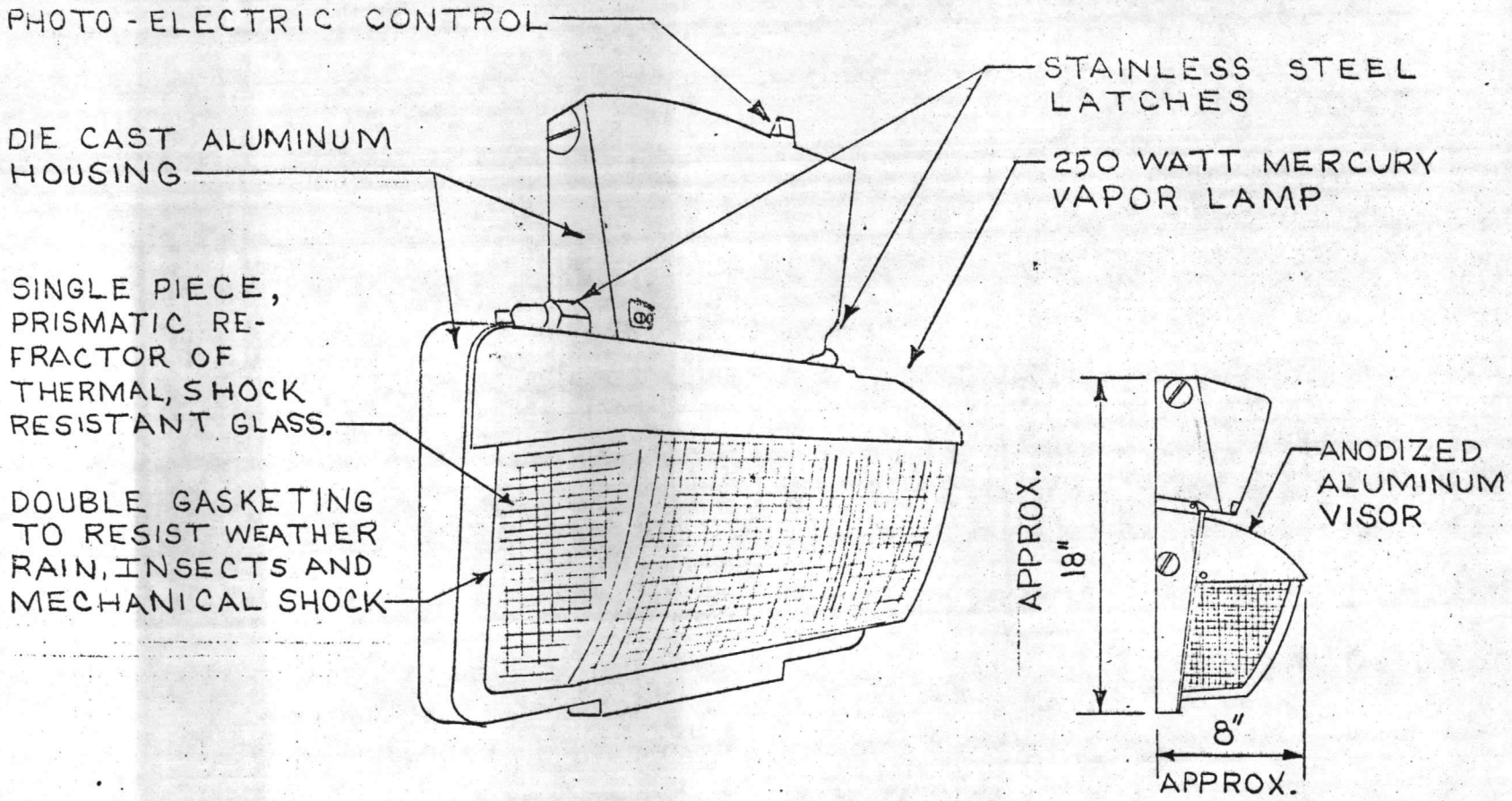

LANTDIV PLATE 16-Y 3-9-70

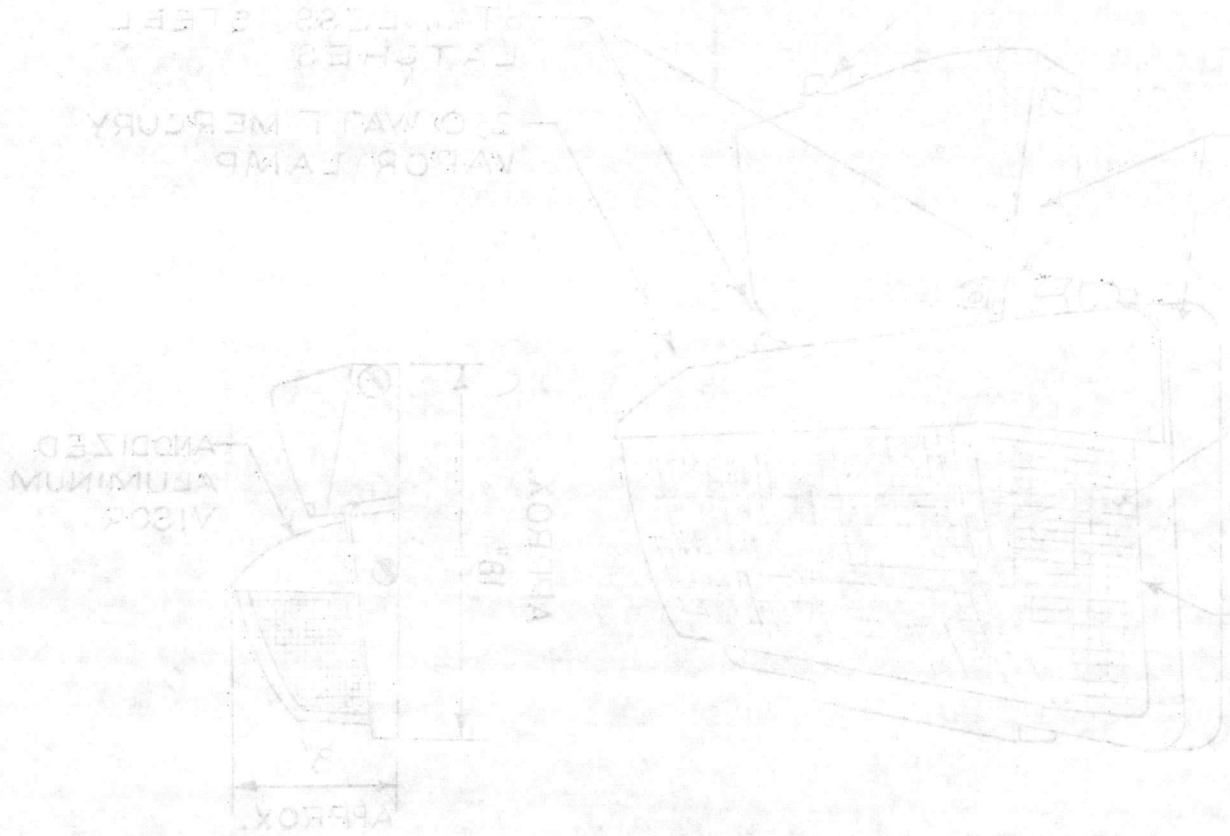

CORROSION PROOF DIE CAST ALUMINUM LAMPHOLDERS W/ ADJUSTABLE SWIVEL ARM AND BUILT IN DEGREE MARKED VERTICAL AIMING QUADRANT AND SERRATED TEETH FOR TIGHT GRIP-LOCK-IN

CORROSION-PROOF CAST ALUMINUM 2-HOLE COVER W/ GASKET

HEAVY RUBBER GASKETS FOR POSITIVE WEATHERPROOFING

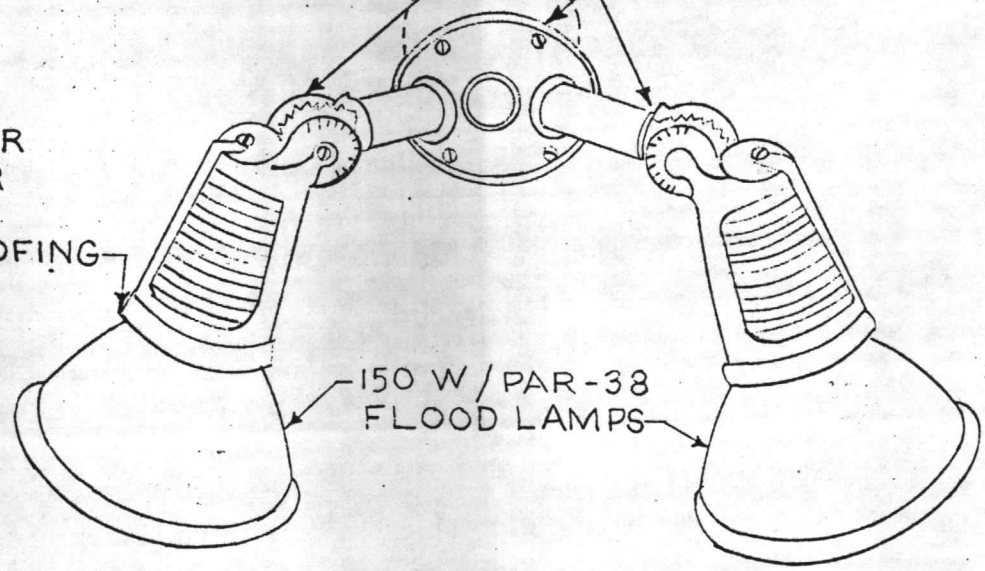

150 W/PAR-38 FLOOD LAMPS

05-70-0939 - 284Y
Section 16A

LANTDIV PLATE 16-X 3-9-70

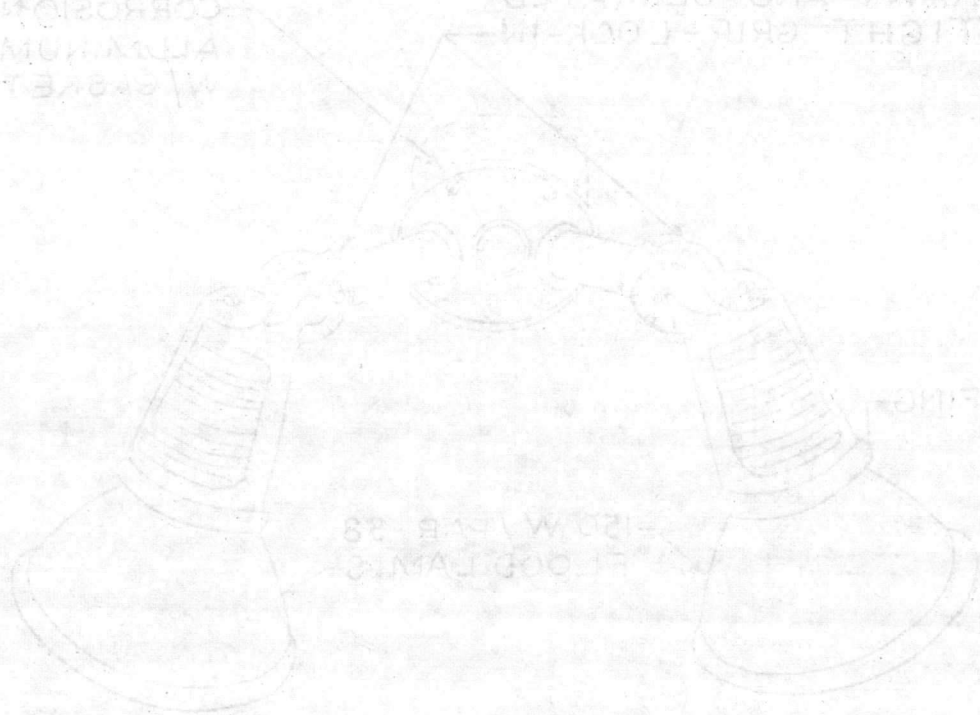

6" LETTER CUT-OUTS IN ALUMINUM OR STAINLESS STEEL, STENCIL FACE

PROVIDE SOCKETS FOR LAMPS AS REQ'D. LAMPS SHALL HAVE 50,000 HOUR LIFE.

EXTRUDED SATIN ALUMINUM HOUSING

RED GLASS BEHIND STENCIL

INNER FRAME ON HINGE FOR RELAMPING. SINGLE FACE.

NOTE:

PROVIDE ARROWS AS INDICATED ON FLOOR PLANS.

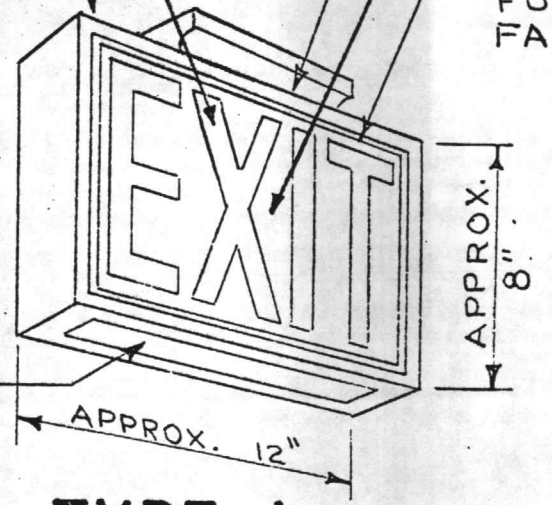

TYPE 1

TYPE 2 SAME AS TYPE1 EXCEPT, SHALL BE DOUBLE FACED.

TYPE 2

TYPE 3 SAME AS TYPE 1 EXCEPT, SHALL BE FOR END WALL MOUNTING.

TYPE 3

TYPE 4 SAME AS TYPE 3 EXCEPT - DOUBLE FACED.

TYPE 4

TYPE 5 SAME AS TYPE 1 EXCEPT SHALL BE, BACK WALL MOUNTED.

TYPE 5

05-70-0939 - 2842
Section 16A

TYPE 1 THRU 5

LANTDIV PLATE 16-Z 3-9-70

SECTION 16B EXTERIOR ELECTRICAL

16B.1 General requirements. The work includes the provision of all overhead and underground equipment, poles, hardware, wires, cables, conduit, duct, handholes, transformers and all other material, apparatus and accessories indicated, specified ornecessary for the extension and modification of certain existing power lines and the provision of primary and secondary power services complete. All materials and workmanship shall be in accordance with 9Y and 42Y, except as specified or indicated otherwise. Material arriving on job site shall be stored in such a manner as to keep material free of rust and dirt and so as to keep material properly aligned and true to shape. Rusty, dirty, or misaligned material shall be rejected. All electrical materials shall be new and listed by the Underwriters' Laboratories, Inc., unless specified otherwise. Defctive materials damaged during installation or test shall be replaced or repaired in a manner meeting with the approval of the Officer in Charge. The contract drawings indicate the extent and general arrangement of equipment, conduit and wiring systems. If any departures are deemed necessary by the Contractor, details of such departures and the reasons therefor shall be submitted as soon as practicable and within 30 days after award of the contract to the Officer in Charge for approval. No such departure shall be made without prior written approval of the Officer in Charge.

16B.1.1 Equipment shall be in accordance with standards of the National Electrical Manufacturers Association (NEMA).

* 16B.2 Applicable publications. The following publications of the issues listed below, but referred to elsewhere by basic designation only, form a part of this specification to the extent indicated by the references thereto (where a number is suffixed to the specification number, it denotes the effective amendment to the specification):

(a) Bureau of Yards and Docks / NAVFAC specifications.

9Yi Electrical apparatus, distribution systems, and wiring, with erratum No. 1.

13Yh Concrete construction, including Addendum No. 1.

42Xc Drainage, sanitary, electrical andwater service appurtenances.

(b) Federal and Military specifications.

J-C-30(1) Cable and wire, electrical (power, fixed installation).

J-C-145b Cable, power, electrical and wire, electrical (weather-resistant).

W-C-571b Conduit and fittings, non-metal, rigid; (asbestos-cement or fine clay cement), for electrical purposes).

W-F-406b Fittings for cable, power, electrical and conduit, metal, flexible.

W-F=408b Fittings for conduit, metal, rigid, (thick-wall and thin-wall (EMT) type).

W-F-791d(1) Fuse, cartridge and fuse, plug.

W-S-610b(1) Splice, conductor.

W-S-865c(1) Switch, box, (enclosed) surface-mounted.

W-T-631c(2) Transformer, power, distribution

FF-B-561b Bolts, lag.

QQ-S-632b(1) Steel bar;reinforcing for concrete.

QQ-W-343c Wire, electrical copper,

WW-C-540b Conduit, metal, rigid, (electrical, aluminum).

WW-C-581d(3) Conduit, metal, rigid; and coupling elbow and nipple, electrical conduit; zinc-coated.

MIL-I-790b Insulators, electric, porcelain glazed.

MIL-B-857A(4) Bolts, nuts and studs.

MIL-E-16366d(11) Electrical clamps, lug terminals and conductor splices-pressure grip.

MIL-Z-1787IA Zinc coating (hot-dipped galvanizing).

MIL-C-23571 Conduit and fittings, plastic, rigid.

MIL-C-18480A Coating compound, bituminous solvent, coal tar base.

(c) Other Government specifications and standards

LANTDIV plates

16-10 Pole guying

16-11 Grounding

16-12 Three-phase transformer bank

16-13 Connection-Aerial to underground

16-14 Pole space assignment

16-15 Crossarm

16-19 Straight line construction

(d) Non-Government specifications and standards (USA/ASA)

National Bureau of Standards Handbook:

H30-1948	National electrical safety code.
H81-1961	Installation and maintenance of electric supply and communications lines.

United States of America Standards Institute (USA/ASA)

C7.8-1965	Concentric-lay-stranded copper conductors, hard, medium, hard, or soft.
C29.1-1961	Electrical power insulators.
C29.2-1962	Wet process porcelain insulators (suspension type).
C29.3-1961 through C29.7-1961	Wet process porcelain insulators (spool, strain, low- and medium-voltage pin, high-voltage pin, and high-voltage line-post type).
C57.12.00-1965	General requirements (for transformers).
05.1-1963	Specification and dimensions for wood poles.

American Wood-Preserver's Association (AWPA)

Book of Standards (Current Edition)

Canadian Standards Association (CSA)

Edison Electric Institute (EEI)

TD-1-1958	Steel bolts and nuts.
TD-2-1956	Strand-eye anchor rods.
TD-3-1964	Lag screws.
TD-4-1958	Eye bolts.
TDJ-5-1966	Eyenuts and eyelets.
TD-6-1957	Steel crossarm braces.
TD-9-1942	Single tube seamless copper splicing sleeves.
TDJ-10-1962	Washers.
TD-11-1951	Guy hooks and guy strain plates.
TD-12-1958	Pole guards.
TD-14-1954	Moulding staples.
TD-16-1950	Line hardware materials inspection procedure.
TDJ-17-1963	Bolt type steel insulator pins with 1-in. diameter lead threads.
TDJ-19-1960	Mounting brackets for distribution cutouts and distribution-glass lightning arrestors.
TD-21-1952	Steel clevises for guy strain insulators.
TDJ-23-1964	Guy clamps.
TD-90-1960	Douglas fir crossarms, treated or untreated.

The Institute of Electrical and Electronics Engineers, Inc. (IEEE)

No. 48	Potheads (May 1962)

Insulated Power Cable Engineers Association (IPCEA)

No. S-19-81-1966	Rubber-insulated wire and cable for the transmission and distribution of electrical energy (fourth edition, January 1964).
No. S-61-402	Thermoplastic-insulated wire and cable for the transmission and distribution of electrical energy, July 1961, including revisions through December 1966
Interim STD. No. 1 to S-66-524	Cross-linked thermosetting polyethylene insulation for power cables rated 601-15,000 volts
Interim Std. No. 2 to S-66-524	Cross-linked thermosetting polyethylene insulation for power cables rated 0 through 600 volts

National Electrical Manufacturers Association (NEMA)

LA1-1965	Lightning arresters.
SG1-1966	Electric power connectors.
SG2-1963	High-voltage fuses.
SG3-1965	Low-voltage power circuit breakers.
TR1-1964	Transformers, regulators, and reactors.
WC-3-1964	Rubber-insulated wire and cable for the transmission and distribution of electrical energy.
100-1960	Mounting brackets for distribution cutouts and distribution-class lightning arrestors.
210 thru 213-1957	Secondary unit substations

National Fire Protection Association (NFPA) Publication

No. 70-1968	National electrical code

16B.3 Standard products. Unless otherwise indicated in writing by the Officer in Charge, the materials to be furnished under this specification shall be standard products of manufacturers regularly engaged in the production of such equipment and shall be the manufacturer's latest design. All items of the same type or ratings shall be identical.

16B.4 Field Painting is specified under Division entitled,"Finishes".

16B.5 Underground cabling and equipment shall conform to 9Y and to the respective specifications and other requirements specified herein and LANTDIV plate 16-13 connection - aerial to underground.

16B.5.1 Grounding conductors shall be No. 6 AWG copper for grounding cable sheaths, conduit, and equipment and No. 2 AWG copper for grounding lightning arresters to ground rods for ground systems as shown.

16B.5.2 Neutral conductors shall have type TW insulation.

16B.5.3 12.47-KV cable for 12470/7200 volt 3 phase Wye primary service shall be single conductor Class B stranded concentric round copper rated for grounded system. Conductor size shall be asindicated. Cutting lengths shall be determined by the Contractor. The cable shall have semi-conducting tape over the conductor, cross-linked thermosetting polyethylene insulation, semi-conducting tape, copper shielding tape and poly-vinyl chloride jacket overall. Cable shall conform to Interim Standard No. 1 to IPCEA Publication No. S-66-524.)

16B.5.4 600-volt cables shall be copper and shall be Underwriters approved type "USE" cable. Conductor size and number of conductors in each cable shall be as indicated on the drawings. 600-volt cables shall conform to the requirements of the National Electrical Code and 9Y. Cable shall be color coded.

16B.5.5 Miscellaneous wire and cable for switchboard wiring, and control applications, shall be in accordance with specification 9Y, unless otherwise noted. Telephone and supervisory control cable shall be polyethylene-insulated, polyethylene-jacketed type conforming to REA specification PE-22. Cable and wiring shall be color coded.

16B.5.6 Pulling lengths. Pulling lengths shall be determined by the Contractor. Cable rated 4.16 KV and above shall becut to pulling lengths, pulling eyes attached, wiped and sealed with lead by manufacturer prior to shipment. Pulling tension shall not exceed manufacturer's recommendations.

16B.5.7 Tests. All factory tests shall be made and certified by the cable manufacturer in accordance with AEIC and/or IPCEA specifications. The Officer in Charge shall be notified and may witness factory tests. High voltage tests shall be applied after application of polyethylene jacket and shall be made at the voltage specified. No reduction in test voltage will be permitted because of the polyethylene jacket. Subsequent acceptance tests, required because of failure of cable to pass initial test, will be performed by the Government at the Contractor's expense. A continuous factory test shall be made for integrity of polyethylene jacket on all high voltage cables by applying a voltage of not less than 100 volts per mil of jacket thickness.

16B.5.8 Terminators. All solid-insulated, non-metallic-jacketed cable shall terminate in terminators in accordance with cable manufacturer's instructions and specification 9Y.

16B.6. Underground conduit system shall conform to 9Y and 42Y and other requirements specified herein. The number, size and location of all conduit and duct runs is indicated on the drawings. Minimum size for power and telephone ducts and conduits shall be four inch unless noted otherwise. All exposed conduits, including pole risers and elbows for stub-ups shall be hot-dipped galvanized rigid steel conduit. Underground ducts shall be asbestos cement encased in concrete as shown and specified. All telephone duct and conduit bends used in pulling sections of 100 feet or more shall have radius of not less than 35 feet and for pulling sections of less than 100 feet in length, the minimum radius shall be not less than ten times the inside diameter of the duct or conduit.

16B.6.1 Asbestos-cement conduit and fittings, Type I. Asbestos-cement conduit and fittings shall conform to W-C-571. (Five) (Four) inch minimum diameter conduits shall be provided with tapered couplings using precast concrete or plastic spacers and encased in 3 inch minimum Class E1 reinforced concrete envelope as indicated in details. Asbestos-cement to steel fittings shall be provided at the equipment stub-ups or other rigid hot-dipped galvanized steel connections. End bells shall be provided at all manhole faces.

16B.6.2 Rigid steel conduits. Rigid steel conduits shall be zinc coated and conform to WW-C-581. When provided underground, the conduit shall be encased in a minimum of 3 inches of Class E1 concrete. Bushings shall be provided on each end of conduit sleeves which pass through cable vault walls and roofs.

16B.6.3 Provision of underground ducts. Trenches shall be excavated along straight lines, from handhole to handhole, before ducts are laid or manholes constructed so the elevation can be adjusted if necessary, to avoid unseen obstruction. Duct banks shall be assembled with spacers and couplings to the required sections and securely anchored by stakes and tie wires or other approved means to prevent floating in the poured concrete. Concrete shall be carefully spaded when poured to insure that all spaces between ducts are filled and no voids exist. End bells shall be provided flush at all manhole faces.

16B.6.4 Elbows. All duct elbows shall be long radius type with a radius of 36 inches on 4 and 5 inch conduits.

16B.6.5 Grounding. Ground rods 3/4 inch by 10 feet long, shall be provided in manholes and handholes as specified in 9Y and 42Y. Cable sheaths, equipment, and conduits shall be grounded as specified. (A complete bonded metallic ground system shall be installed throughout the underground distribution system.)

16B.7. Pole line construction shall conform to the requirements of the National Bureau of Standards Handbook H30 and 81 for Grade "B" construction heavy loading and to 9Y and as further specified herein.

16B.7.1 Poles shall be Southern Yellow Pine or Douglas Fir, length and class as indicated, in accordance with ASA No. 05.1 machine trimmed to a smooth surface, and free of crooks or sweeps exceeding 1 inch per 10 feet of pole length. Pole shall be bored, gained and roofed before treatment. Plastic pole caps shall be added after treatment. Poles shall be pressure treated with creosote in accordance with the American Wood Preserver's Association Book of Standards, for a minimum retention (by weight) of ten pounds per cubic foot of wood.

16B.7.2 Storage and Handling of Poles: Poles held in storage for more than 2 weeks shall be stored in accordance with American standard 05.1. The handling of poles shall be in accordance with American standard 05.1, except that pointed tools capable of producing indentations more than 1 inch in depth shall not be used.

16B.7.3 Pole setting. Depths, unless otherwise noted, shall be as follows:

Length Overall (feet)	Setting depth, minimum (feet and inches) Straight lines	Curves, corners, & points of extra strain
35'	6-0	6-0
40'	6-0	6-0
45'	6-6	7-0

16B.7.4 Crossarms shall be pressure treated with creosote, straight close-grained Douglas Fir, size and length as indicated, free from heavy skips, machine roofed, trimmed and bored before creosoting. Creosoting shall be in accordance with the American Wood Preserver's Association Book of Standards for eight pounds per cubic foot of wood, minimum retention. Crossarms shall conform to details shown on LANTDIV plate 16-15.

16B.7.5 Installation. The Contractor shall provide all poles, guys, anchors, insulators, hardware, conductors, connectors, and the required materials for the complete installation of the overhead lines as indicated on the drawing and described in these specifications. The Contractor shall furnish all required materials for replacing or relocating existing overhead lines as shown on the drawings. The Contractor shall furnish all material required for any temporary arrangement necessary in order to complete the final installation.

16B.7.6 Pole guying shall be as shown on LANTDIV plate No. 16-10.

16B.7.7 Anchors shall be hot-dip galvanized in accordance with Military Specification MIL-Z-17871 and shall be installed with anchor rods in direct line with the guy and load to be supported. Anchors shall be located at a distance from the base of the pole at least 1/2 the height of the guy attachment.

16B.7.8 Plate type anchors shall be hot-dip galvanized with an area of at least 135 square inches, and shall be rated by the manufacturer for 10,000 pounds or more in "loose-dry" soil. The rods for plate anchors shall be 8 feet long and 1 inch in diameter, hot-dip galvanized steel with a thimble-eye for attachment of the guy cable. The rods shall be designed for attachment to the plate anchors with which they are to be used and shall be of a strength sufficient to withstand a load equal to the maximum rated strength of the anchor.

16B.7.9 Guy strand shall be extra high strength, 3/8 inch in diameter, 7 strand, electrolytic or hot-dip galvanized steel with a minimum breaking strength of 10,800 pounds. Guy strand loading shall be limited to the percent of ultimate strength for the loading computed in accordance with the applicable rules of the National Electrical Safety Code for Grade "B" construction.

16B.7.10 Hardware shall be of standard type manufactured for pole line construction. Miscellaneous steel hardware, including bolts, washers, locknuts, eyenuts, guy attachments, guy clamps, etc., shall be hot-dip galvanized in accordance with MIL-Z-17871 and shall be capable of withstanding the maximum loading imposed thereon with the appropriate safety factors as specified by the National Electrical Safety Code for Grade "B" construction in the Medium Loading District.

16B.7.11 Pins:

(a) Metal pins shall be zinc-coated forged steel with lead thread height to suit the insulator provided, but not less than 4-1/2 inches high by 5/8=inch diameter. Shoulder shall be not less than 2-inch diameter, designed to distribute load uniformly to the crossarm. Shank shall be not less than 5/8-inch diameter by 5-3/4-inch length, equipped with 2-inch-square washer, nut, and locknut, and shall project not less than 1/8-inch nor more than 2 inches beyond locknut. Broad-base corner pins, of drop-forged steel or malleable iron, may be used for turning small angles as shown on LANTDIV plate 16-16, figure 1.

16B.7.12 Insulators:

16B.7.12.1 General: Insulators for use on primary distribution system shall conform to the American Standards Nos. C29.2, C29.4, C29.5, C29.6 or C29.7, as applicable for the installation, with testing in accordance with ASA Standard C29.1. Suspension-type insulators shall be used on the primary system at corners and angles, for suspended buses, at dead ends, and whereever else pins do not provide adequate strength. Pin insulators shall be radio-freed or line-post type. Mechanical strength of suspension and strain insulators shall exceed the ultimate strength of the conductor or guy attached thereto. Insulators for various uses shall have ratings not lower than the classes indicated in table 2.

Table 2
Minimum rating of insulators in terms of class

Service	Pin	Suspension
5,001-15,000	55-5	2 x 52-2

16B.7.13 Overhead conductors for 12.47/7.2KV open wire circuits shall be bare, hard drawn, copper, sized as indicated and in accordance with specification QQ-W-343. Tie wire shall be No. 6 AWG. Cable splices, dead end terminations and connections shall have a breaking strength in excess of the breaking strength of the conductors.

16B.7.14 Conductors and equipment shall be provided where it is necessary to extend or modify existing circuits and shall be as shown on the drawings. Conductors shall be new and of the identical size, type, material, and rating as the line being modified or replaced.. Other

necessary insulators, hardware, and equipment shall be of the appropriate size and rating in each case.

16B.7.15 Outage of Overhead Lines. Prior to starting work of any description near any energized overhead line, the Contractor shall notify the Officer in Charge. The Contractor shall take all possible precautions to maintain safe working conditions at all times, and particularly near energized overhead lines. The existing overhead lines shall remain in service during the construction work whenever it is possible to do the work in accordance with safety codes, and safe construction practices. Whenever it is necessary to de-energize overhead lines, a written request to the Officer in Charge shall be made by the Contractor two weeks prior to the outage. The Contractor shall submit a complete listing of the work to be performed, lines to be removed from service, and the length of time requested for the outage. All required outages shall be during weekends, holidays and at times specified by the Officer in Charge.

16B.7.16 Lightning arresters shall be provided at all aerial-to underground connections, dead ends, and transformers. Selection of arrester ratings and classification according to use shall be as described by NEMA LA1. Arresters shall be equipped with suitable mounting brackets for the applicable method of mounting. Arresters shall be connected by means of a soft-drawn-copper conductor, not lighter than No. 4 AWG, to a copper or copper-clad-steel ground rod not less than 3/4 inch in diameter, or its equivalent. The ground rod shall be driven at least 8 feet into the ground approximately 3 feet out from the base of the pole. After installation is completed, the top of the ground rod shall be approximately 1 foot below finished grade. The total ground resistance shall not exceed 10 ohms. Where this condition cannot be obtained with one rod driven 8 feet in the ground, a longer rod, deep-drive sectional rods, or additional rods connected in parallel shall be installed as indicated on LANTDIV plate 16-11, until the required ground resistance is obtained, except that not more than a total of four 8 foot ground rods will be required. The Contractor may, at his option, provide copper-coil-type grounds as shown on LANTDIV plate 16-11, in lieu of ground rods where a ground resistance of 10 ohms or less can be obtained by this method. Ground resistance shall be measured in normally dry conditions not less than 48 hours after rainfall. The ground conductor shall be protected by half-round wood, plastic, or fiber molding from the ground line to a point at least 8 feet above the ground line and throughout the communication and transformer spaces. The wood plastic or fiber molding shall be stapled to the pole at intervals not exceeding 2 feet, with one staple not more than 3 inches from each end. Single-point serrated staples of a type suitable for use with the plastic or fiber molding shall be used for stapling molding to the pole. Where ground conductor is not covered by molding, it shall be stapled to the pole at intervals not exceeding 2 feet. All connections

shall be made with solderless connectors except where solder-type lugs are furnished on the equipment.

16B.7.17 Primary-fuse cutouts shall be extra-heavy duty, porcelain-enclosed indicating non-dripout type, rated 7.8 and open type rated 14.4, either indicating or dropout at the option of the contractor. Open-link rural-type cutouts are not acceptable. Fuse ratings shall be equal to approximately 150 percent of the transformer full-load rating, or shall be as indicated on the drawings and coordinated to the transformers provided.

16B.7.18 Grounding: The neutral conductors, and non-current-carrying parts of equipment at each transformer installation shall be grounded. Ground conductor shall be soft-drawn copper, having a current capacity of at least 20 percent of that of the largest conductor to which it is connected, but not smaller than No. 6 AWG and not smaller than indicated on the drawings. Ground conductor shall be connected to a copper or copper-clad-steel ground rod not less than 3/4 inch in diameter as shown on LANTDIV plate 16-11. The ground rod shall be driven at least 8 feet into the ground approximately 3 feet out from the base of the pole. After installation is completed, the top of the ground rod shall be approximately 1 foot below finished grade. The total ground resistance shall be in accordance with specification 9Y. Where this condition cannot be obtained with one rod driven 8 feet in the ground, a longer rod, deep-driven section rods, or additional rods shall be installed until the required ground resistance is obtained, except that not more than three 8-foot ground rods will be required. The contractor may, at his option, provide copper-coil-type grounds as shown on LANTDIV plate 16-11, in lieu of ground rods, where a ground resistance as specified in specification 9Y can be obtained by this method. Ground resistance shall be measured in normally dry conditions, not less than 48 hours after rainfall. The ground conductor shall be protected by ahlf-round wood, plastic, or fiber molding from the ground line to a point at least 8 feet above the ground line and throughout the communication and transformer spaces. The molding shall be stapled to the pole at intervals not exceeding 2 feet, with one staple not more than 3 inches from each end. Single-point se-rated staples of a type suitable for use with the plastic or fiber molding shall be used for stapling molding to the pole. Where not covered by molding, the conductor shall be stapled to the pole at intervals not exceeding 2 feet. All connections shall be made with solderless connectors or by the molded fusion-welding process. Where the ground wire is connected to aluminum conductors, specially treated or lined connectors suitable for this purpose shall be utilized. Resi-tance of each ground shall be measured separately before bonding.

16B.7.19 Electrical outage: There shall be no electrical outages, for any reason, unless the Contractor has submitted, in writing, a request to be approved by the Officer in Charge. This request shall be submitted at least two weeks prior to the time the Contractor desires the outage and shall contain a schedule of the procedure the Contractor plans to follow and the length of time required. Furthermore, the outage shall be of as short a duration as possible and will take place at a time it will least interfere with the normal station activities. The exact time and date of the outage shall be determined by the Officer in Charge and the Government will not be responsible for premium time to perform the work scheduled during the outage.

16B.8 Transformer station(s) shall be as follows:

16B.8.1 Integral transformer-load center shall be of the outdoor type, of the ratings and arrangements indicated on the contract drawings. Each factory-assembled metal-enclosed center shall consist of a primary incoming section, a transformer section, and an outgoing secondary panelboard section, mounted integrally on the transformer, assembled and shipped as a single integral load center by one manufacturer. Equipment shall be designed to assure operating and maintenance personnel protection from energized apparatus when performing maintenance or operational adjustments on the equipment. Outdoor load centers shall be of weatherproof construction and shall meet the Outdoor Switchgear Weatherproof Tests in accordance with NEMA standard SG 5. Transformer shall have its KVA rating conspicously displayed on its enclosure.

16B.8.1.1 Incoming section shall be metal-enclosed and shall consist of gang operated oil-fused cutouts interrupter switch rated 15KV 100 amps, 95 KV BIL with manual stored energy operator and with current-limiting power fuses coordinated to the transformer and three single conductor potheads clamp-type cable terminals for the cable provided, arranged for conduits entering from below. Primary disconnecting devices shall connect and disconnect all phases simultaneously and shall have a continuous and interrupting rating of 600 amps and shall be suitable for interrupting the load current of the transformer. The incoming section shall contain three lightning arresters coordinated to the transformer and to the primary distribution voltage and be connected integrally to the incoming primary line ahead of any disconnecting device. The transformer primary switch shall have provisions for padlocking in the open and closed positions. Except as indicated otherwise, the incoming section shall conform to NEMA standards 210 thru 213 for secondary unit substations. Manually controlled space heater shall be provided in outdoor units to minimize condensation.

16B.8.1.2 Transformer section shall be askarel-immersed self-cooled transformer, three-phase 60 cycle type, with delta primary and wye secondary. Transformer shall be provided with 2 2-1/2 percent rated KVA high-voltage taps above and 2 2-1/2 percent taps below rated primary voltage with manual tap changer arranged for tap changing only when the transformer is de-energized. Transformer section shall conform to NEMA standard 211 for Radial Type Secondary Unit Substation, complete with all standard accessories and maintenance devices, including dial type thermometer, liquid level gauge, readily accessible drain valve and sampling device.

16B.8.1.3 Outgoing secondary panelboard section shall be equipped with the following instruments of the semi-flush mounting, switchboard type. Indicating instruments shall have suitable scales, accurate to within 1 percent of full scale, with white dials, black numerals and black pointers. Indicating instruments shall be single phase with transfer switches for reading 3 phases. Transfer switches shall be flush mounting type. Watt-hour meters shall be 3 phase furnished in semi-flush mounted cases with meter element removable from the case. All watt-hour meters shall be furnished with maximum demand indicator of the sweep pointer indicating type with a 15 minute interval. Single secondary current transformers having a ratio suitable for the service shall be included with the instruments. Potential leads shall be fused to protect the instruments. The metering compartment shall contain the following items:

1 - Ammeter, 0-1500 ampere scale

1 - Ammeter transfer switch

1 - Voltmeter, 0-600 volt scale

1 - voltmeter transfer switch

1 - Watt-hour meter, 3 phase, with demand register

3 - Current transformers, 600 volt, 1500/5 amperes

1 - Set of potential fuses

16B.8.1.4 Materials and finish of the entire transformer load center shall conform to NEMA standards TR 1 and SG 5 for outdoor transformers and metal-enclosed switchgear assemblies and shall be suitable for the unusual service conditions specified herein.

16B.8.1.5 Pad: Transformer shall be mounted on concrete mat. Unless otherwise indicated, the concrete mat shall be at least 8 inches thick, reinforced with a 6- by 6-inch No. 6 mesh and with a 6-inch thick well-compacted gravel subbase. The top of the concrete mat shall be approximately 4 inches above the finished grade. The mat shall be of adequate size to project at least 8 inches beyond the equipment. Concrete mat shall be class D or 2500 p.s.i. at 28 days and shall conform to SECTION: CONCRETE.

16B.8.2 Power and distribution transformers shall be of the type 1, mineral-oil-insulated, two-winding type, and in accordance with the requirements hereinafter stated. Transformers shall be suitable in every respect for outdoor installation and rated as indicated. Power and distribution transformers shall be products of a manufacturer who has produced units of the same type, rating, and voltage as required for this project, within the 2-year period preceding the date

of the invitation for bids, which have operated satisfactorily for at least 1 year prior to date of the invitation for bids. Evidence showing such production and satisfactory performance and satisfactory performance and provided reliability of the product shall be promptly submitted to the Officer in Charge of Construction upon request therefor. Transformers shall have two 2-1/2 percent rated KVA high-voltage taps above and two 2-1/2 percent taps below rated primary voltage. Transformer tank shall have a standard gray finish. Transformer installations shall include one primary fuse cutout and one lightning arrester for each ungrounded phase conductor. All accessories for each installation shall conform to the applicable NEMA standards and shall be suitable in every respect for the intended service. Each transformer shall have its KVA rating conspicuously displayed on its tank.

16B.8.2.1 Transformer mounting installations: Transformers or transformer banks shall be cluster-mounted as shown on LANTDIV Plate 16-12. Three-phase transformers or transformer banks having a total capacity in excess of 300 KVA shall be integral load center mounted on concrete pad.

16B.8.3 An undercoat of coal tar base conforming to specification MIL-C-18480 shall be applied to the bases of all outdoor switchgear, transformers, etc. in contact with concrete.

16B.8.4 Transformer-station grounding shall be as indicated on drawings, except that ground resistance shall not exceed 10 ohms. A bare copper cable not smaller than No. 4/0 AWG shall be provided not less than 24 inches below grade connecting to the indicated ground rods. Fence and equipment connections shall not be smaller than No. 4 AWG. Fence shall be grounded at each gage post and cornerpost and at intervals not exceeding 10 feet. Each gate section shall be bonded to the fencepost through a 1/8-inch by 1-inch flexible braided copper strap and clamps. Transformer neutral connections shall not be smaller than No. 1/0 AWG. Where the rated secondary current exceeds 400 amperes, the size of the transformer neutral ground connection shall be increased in size to not less than one-half the cross-section area of the secondary-phase conductors. Where the measured ground resistance exceeds 10 ohms, additional ground rods or deep-driven sectional ground rods shall be provided not less than 6 feet apart, and shall be connected by cable not smaller than No.4/0 AWG, 2 feet below grade, until a ground resistance of 10 ohms or less is obtained, except that the total length of additional ground rods required shall not exceed 50 feet.

16B.8.5 Transformer tests shall include ratio, polarity, no load loss, impedance, temperature, impulse strength on liquid filled transformers (except that the chopped-wave test will not be required, and oscillograms of the test need not be furnished), sound level, resistance measurements, and exciting current and low frequency di-electric strength. Eight certified copies of all test results shall be submitted for approval except that certified copies of the temperature, impedance and sound level tests performed previously on a transformer which is a duplicate electrically will be acceptable in lieu of temperature and sound level test. The calculation of the short-circuit strength shall be provided. Of the eight copies of the test reports submitted, six will be retained by the Government.

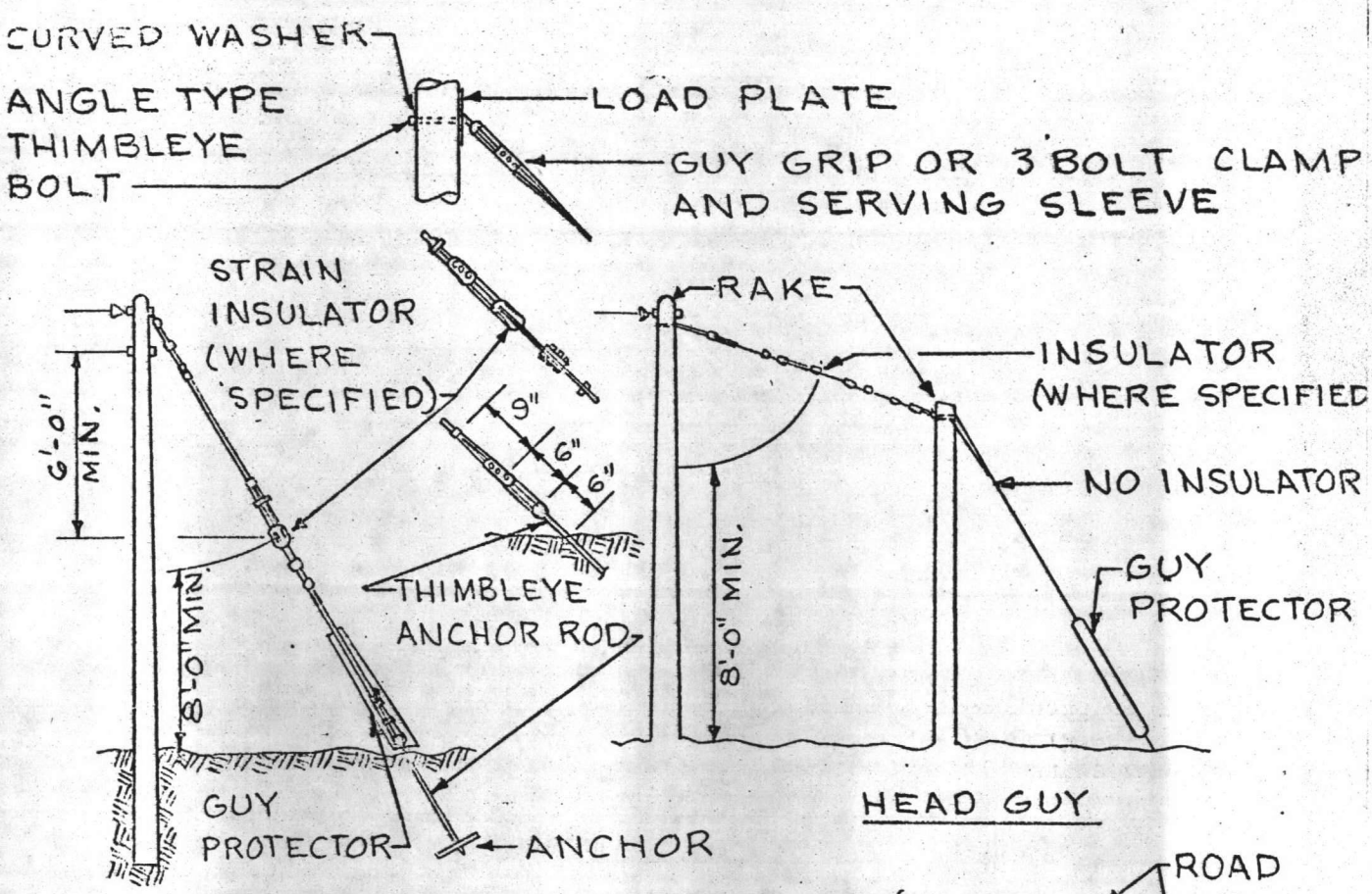

NOTES:

"A" - STANDARD SIDE OR DOWN GUY

"B" - USE HEADGUY WHERE METHOD "A" DOES NOT GIVE SUFFICIENT CLEARANCE.

POLE GUYING

LANTDIV

PLATE NO. 16-10

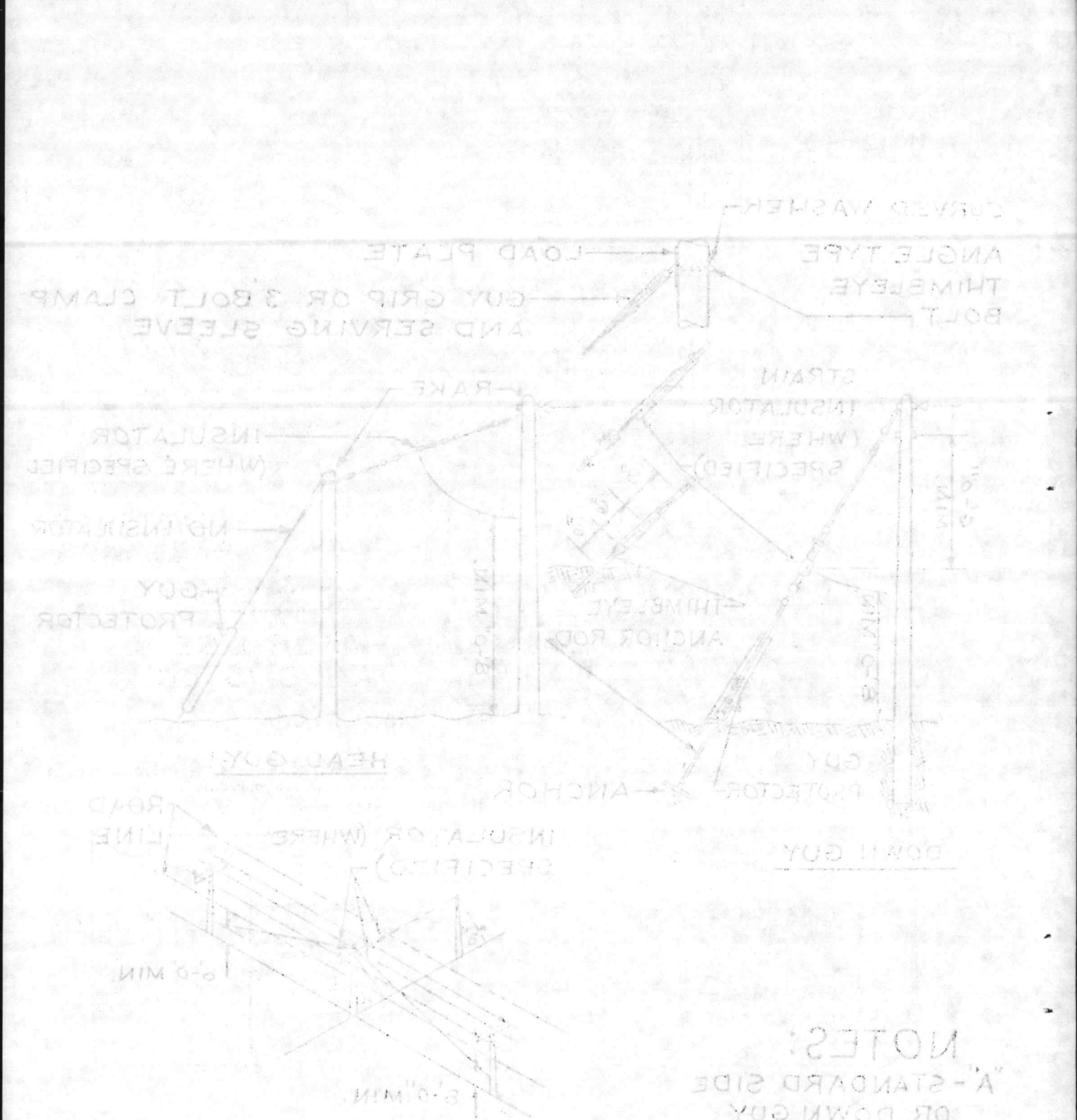

NOTES:

"A" - STANDARD SIDE OR DOWN GUY.

"B" - USE HEAD GUY WHERE METHOD "A" DOES NOT GIVE SUFFICIENT CLEARANCE.

POLE - GUYING

PLANT DIV.

PLATE NO. 315-10

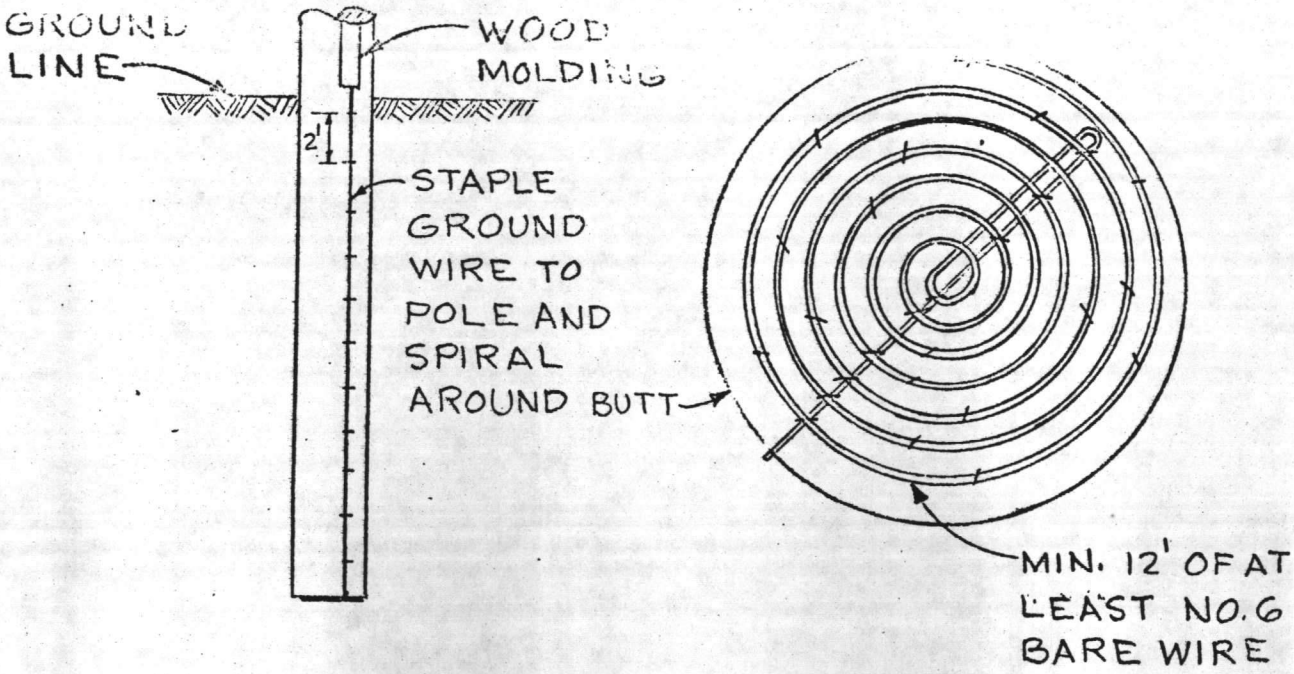

ELEVATION BUTT VIEW

COIL TYPE GROUND - (FOR USE WHERE GROUND RESISTANCE IS LOW)

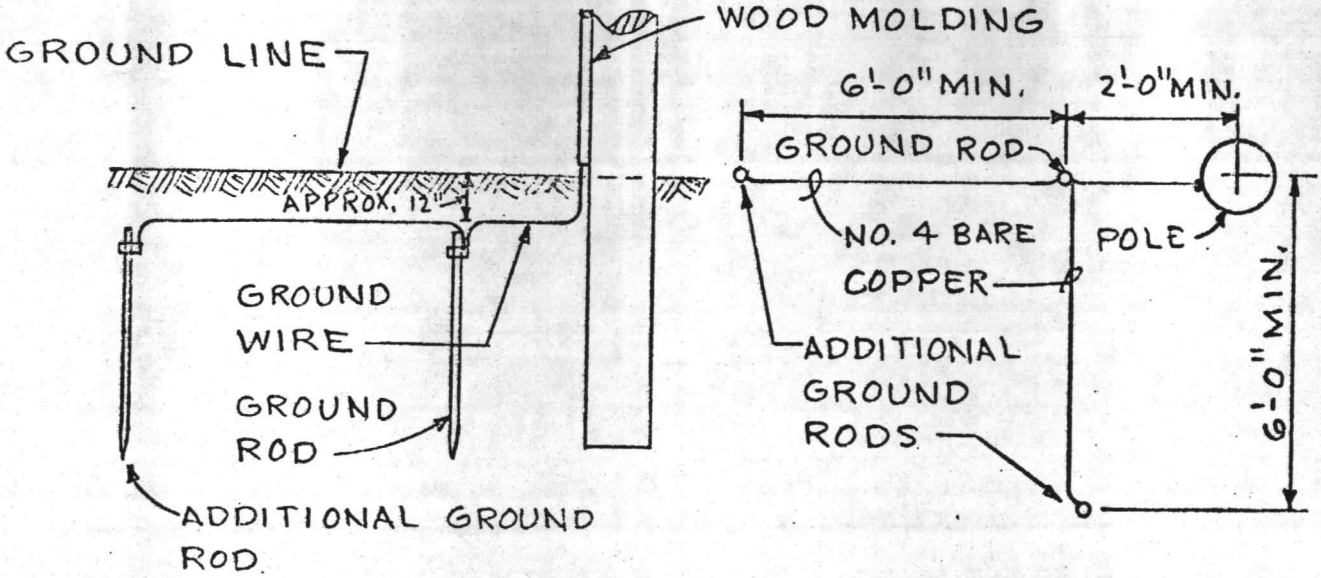

ELEVATION PLAN

GROUND ROD CONNECTION (USE ADDITIONAL RODS WHERE EARTH RESISTANCE IS HIGH.)

LANTDIV

GROUNDING PLATE NO. 16-11

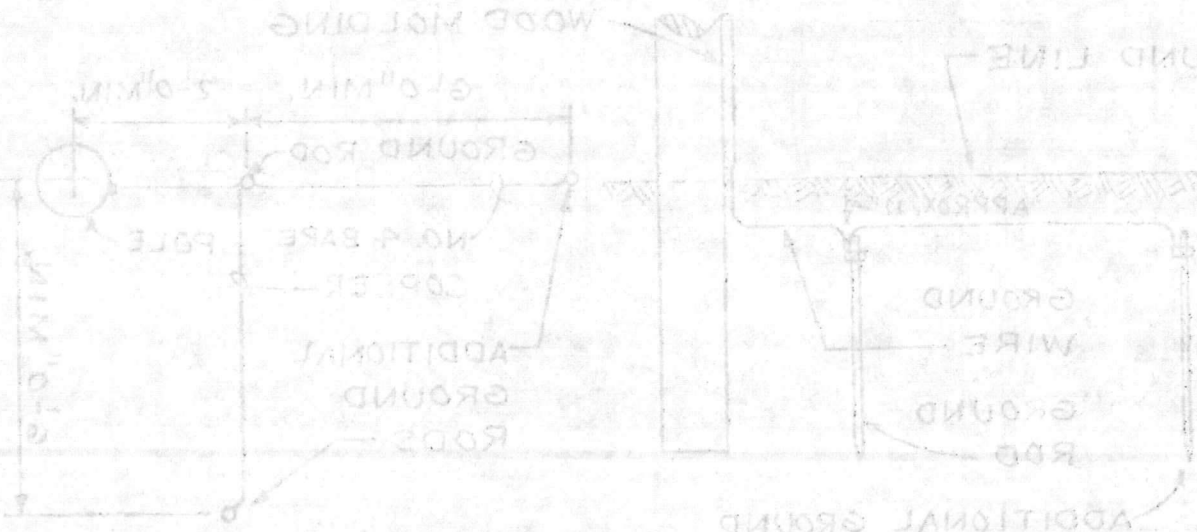

GROUNDING PLATE NO. 16-11

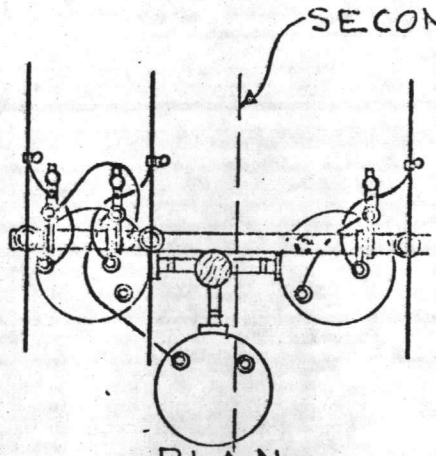

PLAN

NOTE: TRANSFORMERS 100 KVA AND BELOW MAY BE OF THE SINGLE BUSHING TYPE ON GROUNDED WYE SYSTEMS.

90 DEGREE BRACKET SHOWN. 120 DEGREE CLUSTER BRACKET OPTIONAL.

90 DEGREE BRACKET

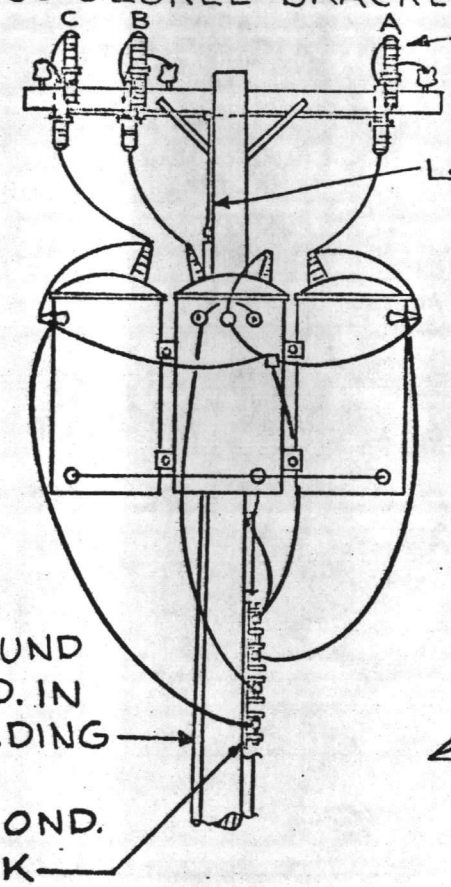

ELEVATION

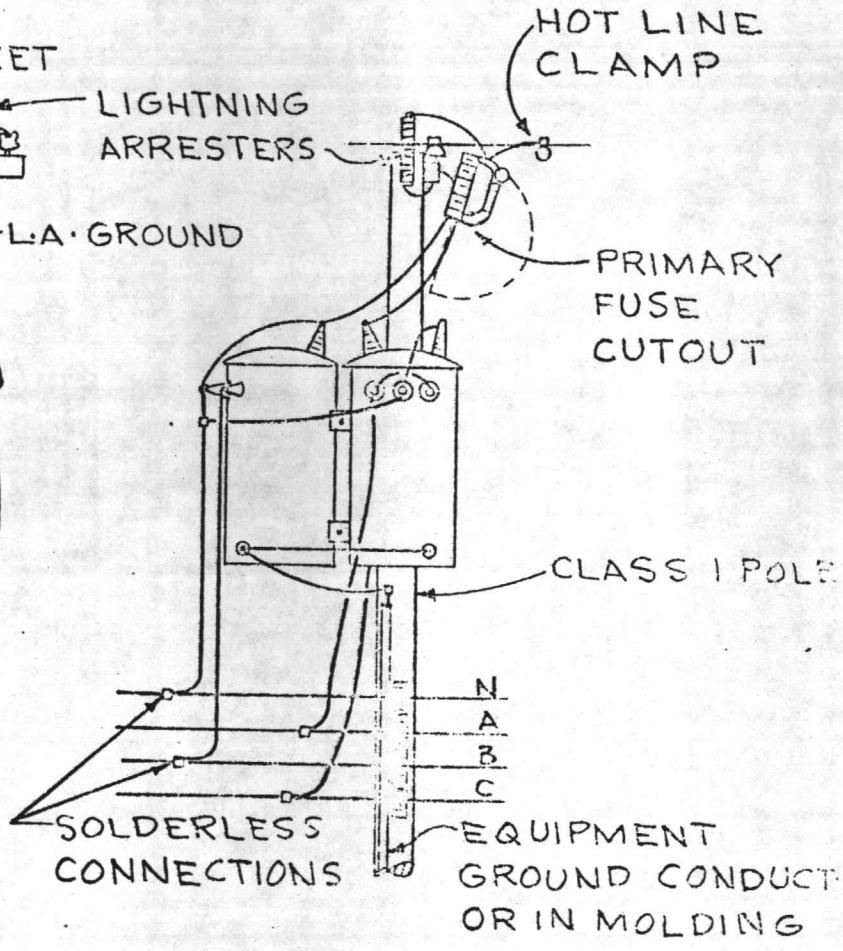

SIDE ELEVATION

THREE-PHASE TRANSFORMER BANK-CLUSTER MOUNT - 3-100 KVA OR LESS

05-70-0939 - 301
Section 16B

LANTDIV
PLATE NO. 16-12

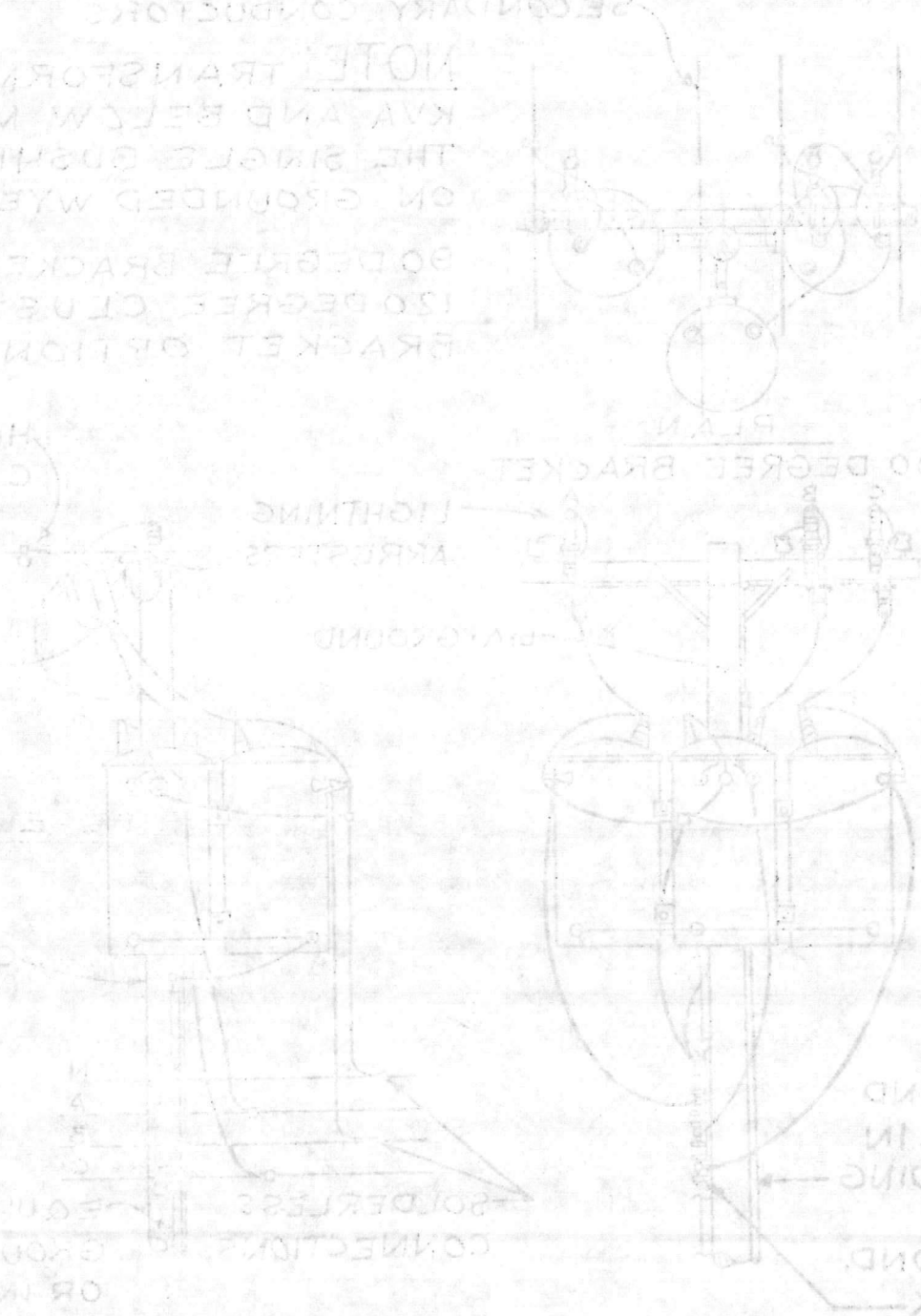
LIGHTNING ARRESTERS
SECOND. GROUND MOLDING
SECOND. RACK

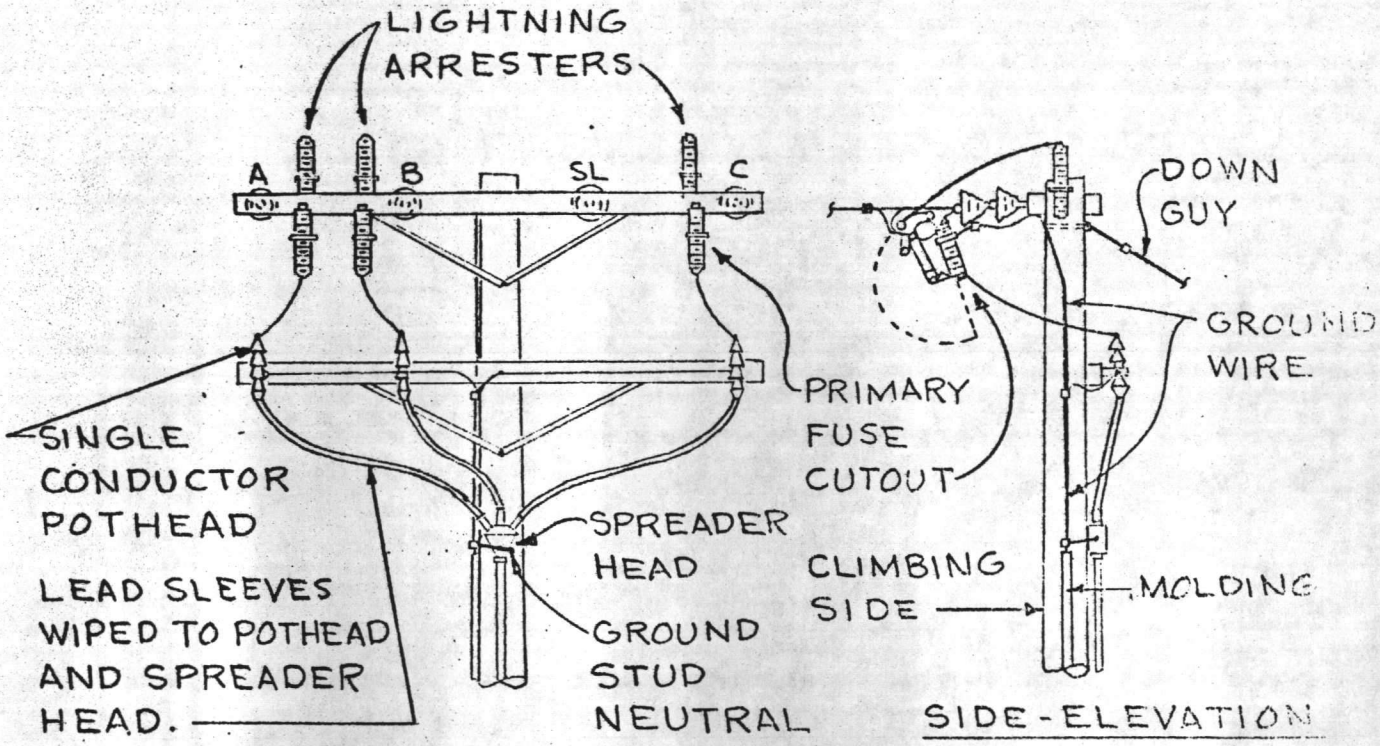

MULTIPLE CONDUCTOR CABLE

SIDE-ELEVATION

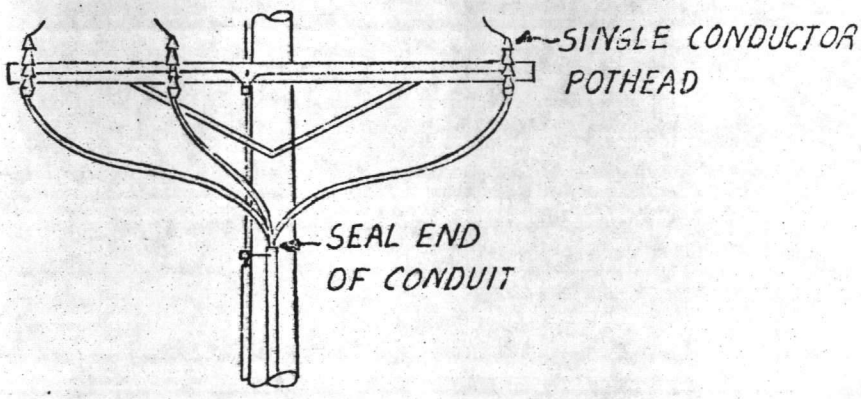

SINGLE CONDUCTOR CABLE

CONNECTION-AERIAL TO UNDERGROUND

05-70-0939 - 302
Section 16B

LANTDIV
PLATE NO. 16-13

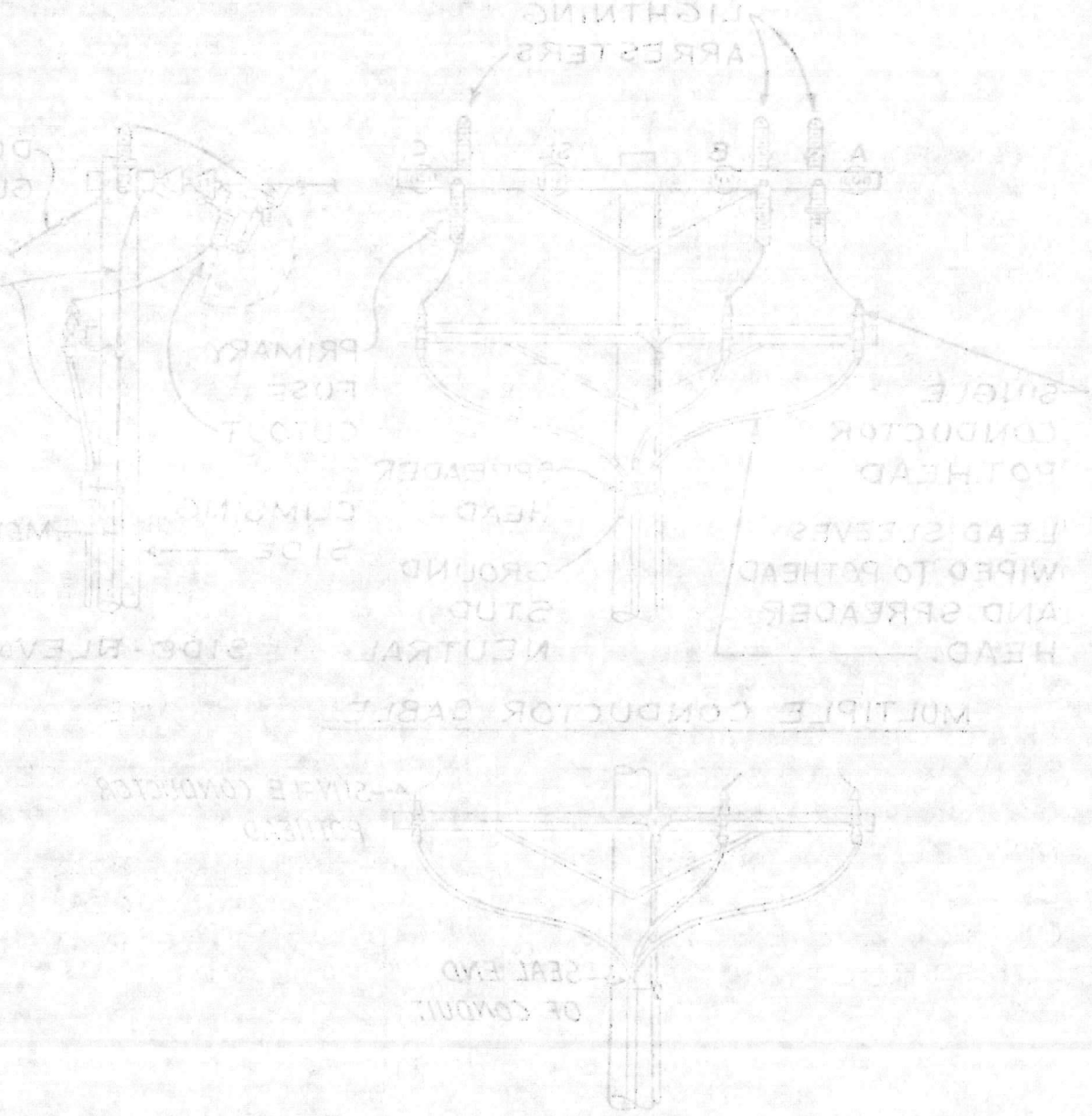
A
B
C
PRIMARY
FUSE
CUT-OUT
GROUND
STUD
NEUTRAL
MULTIPLE CONDUCTOR CABLE
SINGLE CONDUCTOR CABLE
SEAL END
OF CONDUIT
CONNECTION AERIAL
TO UNDERGROUND

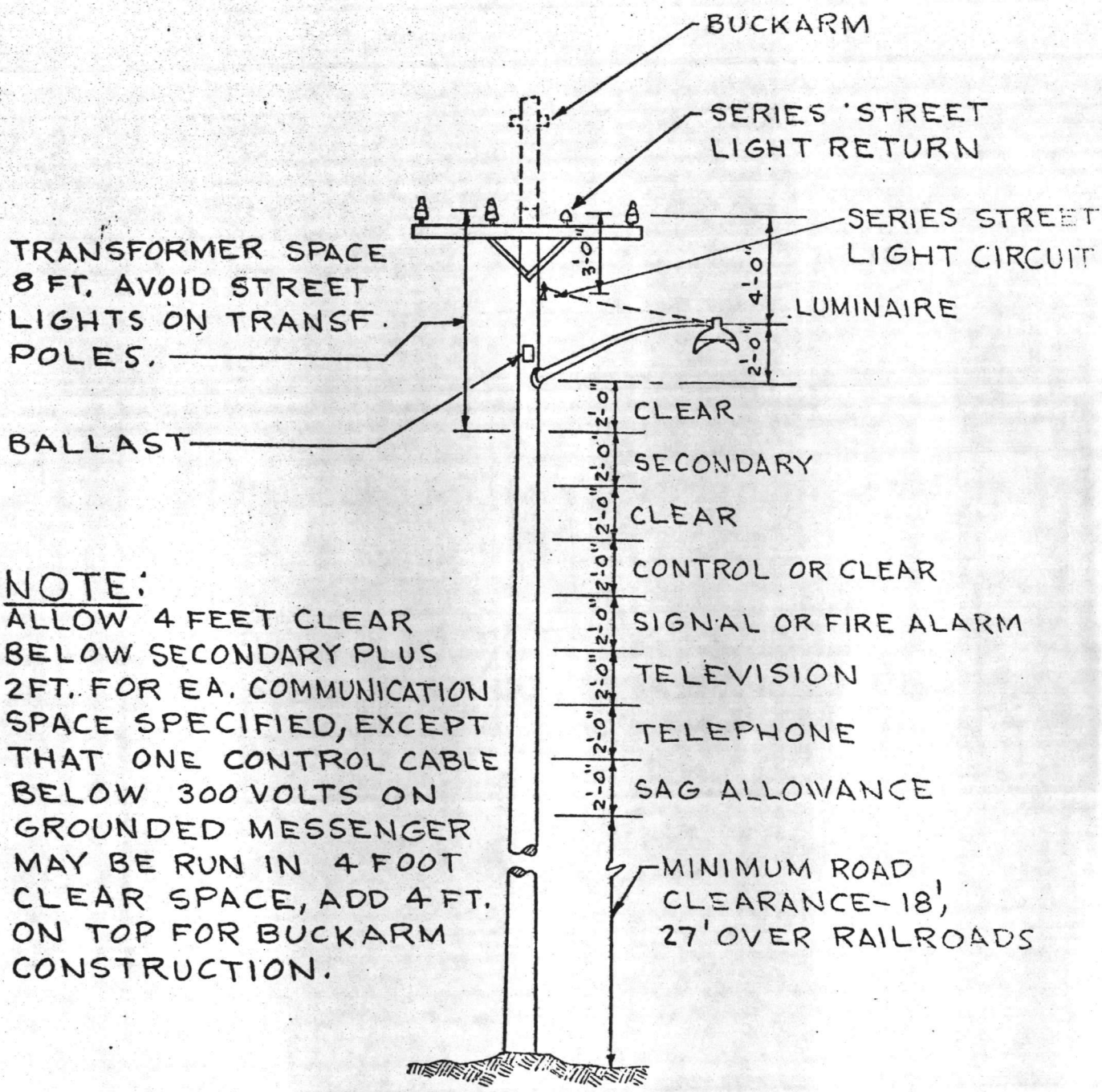

NOTE:
ALLOW 4 FEET CLEAR BELOW SECONDARY PLUS 2FT. FOR EA. COMMUNICATION SPACE SPECIFIED, EXCEPT THAT ONE CONTROL CABLE BELOW 300 VOLTS ON GROUNDED MESSENGER MAY BE RUN IN 4 FOOT CLEAR SPACE, ADD 4 FT. ON TOP FOR BUCKARM CONSTRUCTION.

POLE SPACE ASSIGNMENT

LANTDIV
PLATE 16-14

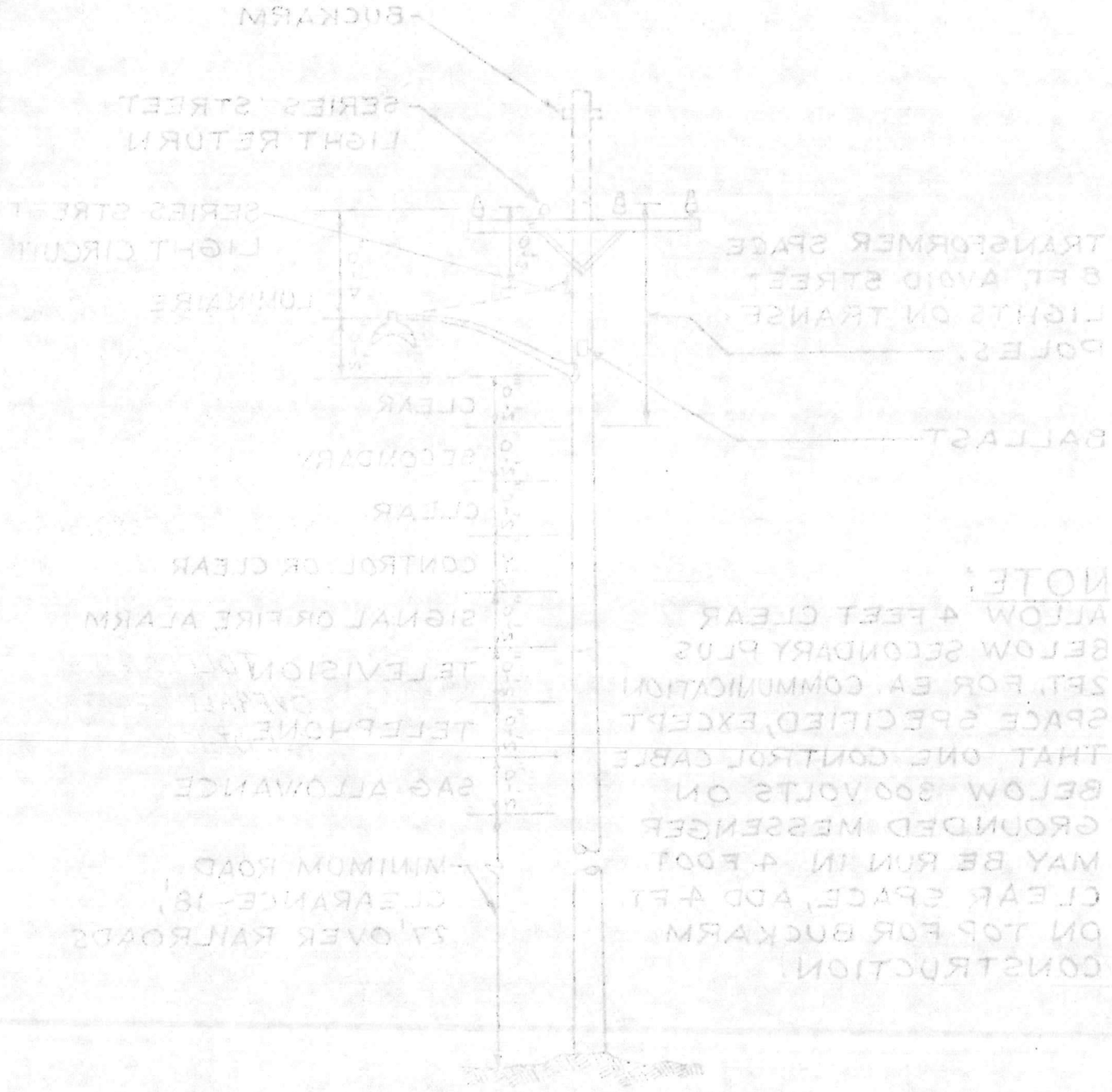

POLE SPACE ASSIGNMENT

LANTDIV
PLATE 16-14

05-70-0939 - 303
Section 16B

TOLERANCES
SIZES OF HOLES

	NOMINAL	GO	NO GO
(A)	11/16"	5/8"	3/4"
(B)	7/16"	3/8"	1/2"
(C)	11/16"	5/8"	3/4"
(D)	9/16"	1/2"	5/8"

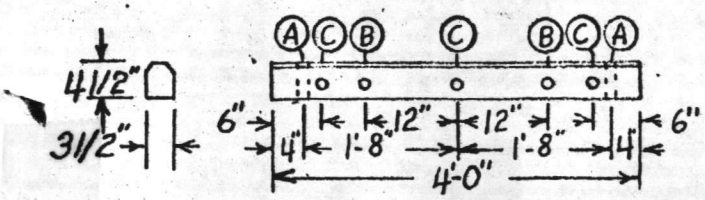

FIG. 1

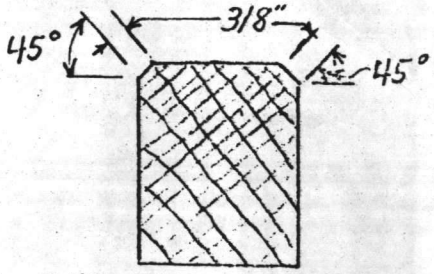

TYPICAL ENLARGED
SECTION OF CROSSARM

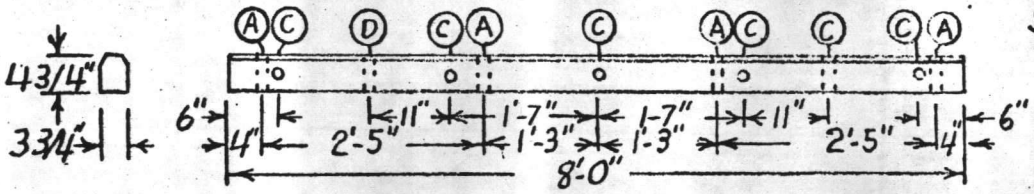

FIG. 2

TOLERANCES
OVERALL LENGTH 1/4" ±
ALL OTHER 1/8 ±

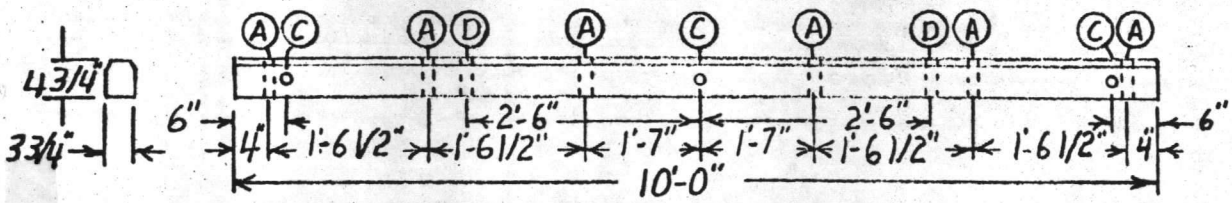

FIG. 3

CROSSARM DRILLING GUIDE

CROSSARM

LANTDIV
PLATE 16-15

FIG 1