FILE FOLDER

DESCRIPTION ON TAB:

Raw Water Pumps

Bldg 20

☐ **Outside/inside of actual folder did not contain hand written information**

☑ **Outside/inside of actual folder did contain hand written information**
***Scanned as next image**

Confidential Records Management, Inc.
New Bern, NC
1-888-622-4425
9/08

RAW Water Booster
Pump INFO - BACK
OF Folder

DEPARTMENT OF THE NAVY
Resident Officer in Charge
Bureau of Yards and Docks Contracts
Marine Corps Base, Camp Lejeune, North Carolina

In reply refer to:

4E-50:NFU:ojs
NBy-24218
27 January 1960

T. A. Loving and Company
P. O. Box 738
Goldsboro, North Carolina

Re: Contract NBy-24218, Rehabilitation of Raw Water Supply, Marine Corps Base, Camp Lejeune, North Carolina

Gentlemen:

We are returning x herewith, _____ under separate cover the following shop drawings or data sheets with action indicated:

No. of Dwgs	Dwg No.	Description	Action
4	8792	Johnston Pump Co. efficiency curve chart and laboratory test data sheet	Approved, subject to contract requirements
4	8793	Johnston Pump Co. efficiency curve chart and laboratory test data sheet	Approved, subject to contract requirements
4	8794	Johnston Pump Co. efficiency curve chart and laboratory test data sheet	Approved, subject to contract requirements

Very truly yours,

W. F. UBER, Jr.
LTJG CEC USN
Assistant Resident Officer
in Charge of Construction

Copy to:
DPWO FIVE (C-320)(w/copy encl)
L. E. Wooten and Co. (w/copy encl)
306 So. Dawson St., Raleigh, N. C.
4E-520 (w/copy encl)
→4E-50 (w/copy encl)
Records (w/2copies encl)
Board

OIC ROICC
MARINE CORPS BASE, CAMP LEJEUNE, N. C.

No. 210

Date 19 Jan 60

From L. E. Wooten and Co.

Subject NBy-24218 - Shop Dwgs. Nos. 8792, 8793 & 8794
Johnston Pump Co.

-CODE-

1. Action
2. Information
3. Prepare reply for OICC/ROICC
4. Prepare reply for MCB
5. Prepare estimate
6. Investigate
7. Retain Copy
8. File
9. _____

ROUTING	CODE	SEQUENCE	INITIAL	DATE
CODE 4E-10				
CODE 4E-10A				
CODE 4E-15				
CODE 4E-16				
CODE 4E-20				
CODE 4E-40				
CODE 4E-50	/	/	wfw	1/20
CODE 4E-51				
CODE 4E-100				
CODE 4E-200				
CODE 4E-300				
CODE 4E-400				
CODE 4E-500				
CODE 4E-510				
CODE 4E-520				
CONTR FILES				

REMARKS: Return approved to TA having wfw

*(Routing slip will be returned to Central Office with correspondence attached unless otherwise indicated)

TAB PLACEMENT HERE

DESCRIPTION:

29

☐ Tab page did not contain hand written information

☒ Tab page contained hand written information
*Scanned as next image

CIVIL, ELECTRICAL, MECHANICAL, STRUCTURAL AND SANITARY ENGINEERING SERVICES

L. E. WOOTEN AND COMPANY
CONSULTING ENGINEERS
RALEIGH, N. C.

January 18, 1960

Department of the Navy
Resident Officer in Charge
Bureau of Yards and Docks Contracts
Marine Corps Base
Camp Lejeune, North Carolina

RE: NBy-24218, Rehabilitation of Raw Water Supply
Marine Corps Base, Camp Lejeune, North Carolina

Gentlemen:

We are enclosing herewith and recommend for approval, without comment, the following:

1 copy each of shop drawings Nos. 8792, 8793 and 8794, Johnston Pump Co. laboratory test data and efficiency curve chart.

Very truly yours,

L. E. WOOTEN AND COMPANY

By R. F. Booth
R. F. Booth

RFR/js
Enclosures

DEPARTMENT OF THE NAVY
RESIDENT OFFICER IN CHARGE
BUREAU OF YARDS AND DOCKS CONTRACTS

Marine Corps Base, Camp Lejeune, North Carolina

IN REPLY REFER TO:
4E-50:WFU:ejs
NBy-24218
13 January 1960

L. E. Wooten and Company
306 South Dawson Street
Raleigh, North Carolina

Re: Contract NBy-24218, Rehabilitation of Raw Water Supply, Marine Corps Base, Camp Lejeune, North Carolina

Gentlemen:

The below listed shop drawings/information on materials proposed for use on the referenced contract are forwarded for your review and comments. It is requested that they be reviewed and returned to this office within seven days from date of this letter.

Dwg No.	No. of Copies	Description
8792	1	Johnston Pump Co. laboratory test data and efficiency curve chart
8793	1	Johnston Pump Co. laboratory test data and efficiency curve chart
8794	1	Johnston Pump Co. laboratory test data and efficiency curve chart

Very truly yours,

W. F. UBER, Jr.
ENS CEC USN
Assistant Resident Officer
in Charge of Construction

OICC-ROICC
MARINE CORPS BASE, CAMP LEJEUNE, N. C.

No. 171

Date 7 Jan 60

From T. A. Loving and Co.

Subject NBy-24218 - laboratory test data and curve charts

-CODE-

1. Action
2. Information
3. Prepare reply for OICC/ROICC
4. Prepare reply for MCB
5. Prepare estimate
6. Investigate
7. Retain Copy
8. File
9. _____

ROUTING	CODE	SEQUENCE	INITIAL	DATE
CODE 4E-10				
CODE 4E-10A				
CODE 4E-15				
CODE 4E-16				
CODE 4E-20				
CODE 4E-40				
CODE 4E-50				
CODE 4E-51	~~1~~	~~1~~	wfw	1/12
CODE 4E-100				
CODE 4E-200	1	2	mtb	1/13/60
CODE 4E-300				
CODE 4E-400				
CODE 4E-500				
CODE 4E-510				
CODE 4E-520				
CONTR FILES				

REMARKS: go to Woolen for evaluation wfw

*(Routing slip will be returned to Central Office with correspondence attached unless otherwise indicated)

DESIGN DIVISION ROUTING

Date 1-12-60

		INITIAL	DATE
Architectural 4E-210			
Civil 4E-220	✓		
Survey 4E-225			
Structural 4E-230			
Electrical 4E-240			
Mechanical 4E-250			
Specifications 4E-260			
Technical Records 4E-270			
Secretary 4E-200			

FOR:

✓ Action
✓ Review/comments and Recommendations
____ Retain
____ Estimate
____ Information

REMARKS:

Go to A&E

(Wooten)

December 28, 1959

Resident Officer in Charge of Construction
Building 1005
U. S. Marine Corps Base
Camp Lejeune, North Carolina

Re: NBy 24218
Rehabilitation of Raw Water
Camp Lejeune, North Carolina

Gentlemen:

We are enclosing three (3) sets of laboratory test data and efficiency curve charts, Numbers 8792, 8753, and 8794 covering tests on pumps 1, 2, and 3 in the new pump room, submitted by Johnston Pump Company.

Very truly yours,

T. A. LOVING AND COMPANY

By: Robert S. Hults
Office Manager-Utility Dept.

RSH/lm
Enclosures

OICC-ROICC
MARINE CORPS BASE, CAMP LEJEUNE, N. C.

No. 215

Date 20 Jan 60

From T. A. Loving and Company

Subject NBy-24218 - Lab. Test data and efficiency curve charts

-CODE-

1. Action
2. Information
3. Prepare reply for OICC/ROICC
4. Prepare reply for MCB
5. Prepare estimate
6. Investigate
7. Retain Copy
8. File
9. _____

ROUTING	CODE	SEQUENCE	INITIAL	DATE
CODE 4E-10				
CODE 4E-10A				
CODE 4E-15				
CODE 4E-16				
CODE 4E-20				
CODE 4E-40				
CODE 4E-50	1	1	wfr	1/20
CODE 4E-51				
CODE 4E-100				
CODE 4E-200				
CODE 4E-300				
CODE 4E-400				
CODE 4E-500				
CODE 4E-510				
CODE 4E-520				
CONTR FILES				

REMARKS: delayed in mail? guess? approved wfr

*(Routing slip will be returned to Central Office with correspondence attached unless otherwise indicated)

T. A. LOVING AND COMPANY

GENERAL CONTRACTORS

GOLDSBORO, N. C.

December 28, 1959

Resident Officer in Charge of Construction
Building 1005
U. S. Marine Corps Base
Camp Lejeune, North Carolina

Re: NBy 24218
Rehabilitation of Raw Water
Camp Lejeune, North Carolina

Gentlemen:

We are enclosing three (3) sets of laboratory test data and efficiency curve charts, Numbers 8792, 8793, and 8794 covering tests on pumps 1, 2, and 3 in the new pump room, submitted by Johnston Pump Company.

Very truly yours,

T. A. LOVING AND COMPANY

Robert S. Hults

By: Robert S. Hults
Office Manager-Utility Dept.

RSH/lm
Enclosures

PER STAGE	1 STAGES	IMP. DIA.	COLUMN LOSS / SHAFT LOSS	FT. / H.P. } FOR	FT	CC ASSY	BHP REQ'D @ / MAX BHP @	GPM / SP. GRAV

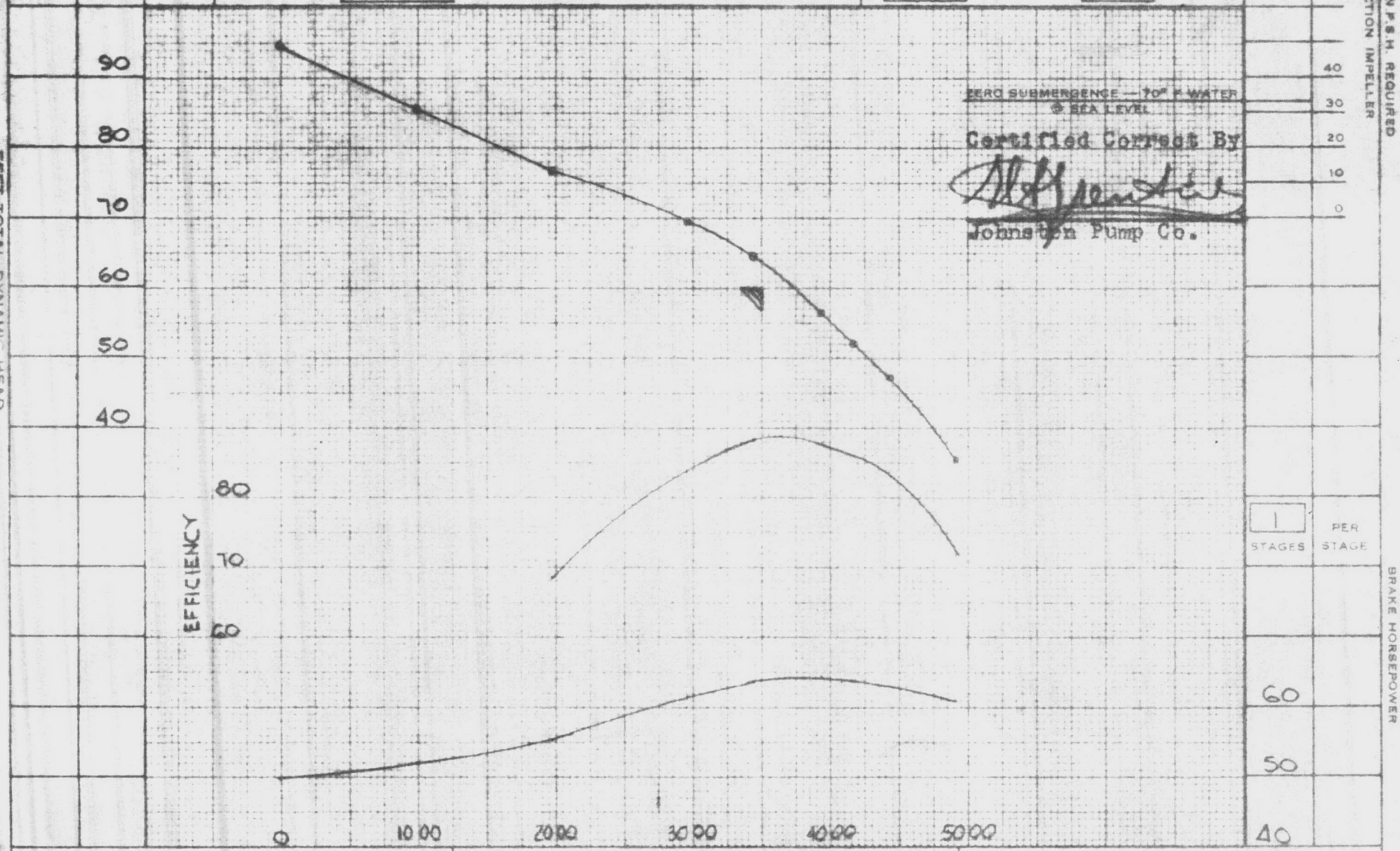

PERFORMANCE BASED ON MULTISTAGE TESTS PUMPING CLEAR COLD WATER SP. GR. 1.0

FOR 1 STAGE MULTIPLY HEAD & EFF. BY

FOR 1 STAGES MULTIPLY HD. & EFF. BY

DATE 10-22-59

JOHNSTON PUMP COMPANY

A division of the Youngstown Sheet and Tube Company

PASADENA, CALIFORNIA

JQ 3864 T. A. LOVING & CO.

20CC TURBINE PUMP — 1175 RPM

IMPELLER — BRONZE BOWL — CAST IRON

STAGES 1

CURVE SHEET NO. 8792

OFFICE OF THE
RESIDENT OFFICER IN CHARGE OF CONSTRUCTION
CAMP LEJEUNE, NORTH CAROLINA

APPROVED

SUBJECT TO CONTRACT REQUIREMEMTS

CONTRACT NBy 24218 SPEC. NO. 24218/59

DATE: 27 Jan 60

N. C. HARVEY
CDR, CEC, USN
Resident Officer in
Charge of Construction

RECEIVED
JAN 27 1960
Officer in Charge Const
Public Works Dept.
Camp Lejeune,
N. C.

JOHNSTON PUMP COMPANY
3272 EAST FOOTHILL BLVD.
PASADENA, CALIFORNIA

LABORATORY
TEST DATA SHEET

CURVE NO. 8792 JOB NO. JQ 3864

JOB NAME T.A.Loving & Co.

Lab MOTOR 200 HP 6 Pole 60 Cycle 3 Phase 440 Volt

IMPELLERS 20CC Type 1 Stage CI,VIT Material 15¼" Dia-Exit-Pitch

RATED CONDITION @ 1175 RPM
GPM 3500
Head 60
BHP 61.5
Sp.Gr.
Eff. 84

WATTMETER Ratio Transformer

BOWLS CI Material VIT Coating SUCTION CASE Bell Type

BEAM # BELLOWS# Span 4

DYNAMOMETER Load Cell Size 3145 Mark 5250 Constant

Impellers Raised 1 ~~Inch~~ Turn Head 24½x12

GPM = 804 x √ΔP

Head Readings Inches (Before, After) Discharge Head

Performance Stage @ RPM

12" ~~xxxxxx~~ VENTURI ΔP IN INCHES OF Hg	G.P.M.	Hg Column Hg	FEET OF HEAD	FEET TO WATER	V²/2g	TOTAL DYN HEAD IN FEET	DYNAMOMETER WATTMETER READING .716	INPUT H.P.	B.H.P.	RPM	EFF.	G.P.M.	TOTAL HEAD IN FEET	B.H.P. / Sp.Gr.
*	0	40.5	93.8	4		97.8	73.0		52.3	1196		0	94.5	49.7
* 1.55	1000	36.5	84.5		.1	88.6	76.4		54.7	1196	40.9	983	85.6	52.0
6.20	2000	66.2	75		.5	79.5	81.4		58.2	1196	69.0	1965	76.9	55.3
13.94	3000	56.6	66.5		1.1	71.6	90.5		64.9	1196	83.5	2950	69.2	61.5
18.95	3500	54.3	61.5		1.5	67.0	93.6		67.1	1196	88.4	3440	64.7	63.7
24.3	4000	46.5	52.7		2.0	58.7	94.5		67.6	1196	87.7	3930	56.7	64.2
28.0	4250	42	47.6		2.2	53.8	93.7		67.2	1196	86.0	4175	52.0	63.7
31.35	4500	37.3	42.3		2.5	48.8	92.7		66.4	1197	83.7	4430	47.2	63.0
38.6	5000	26	29.5		3.1	36.6	89.7		64.3	1198	72.0	4910	35.4	61.0

SUBMERGENCE Ft. In.

Water Temp. °F

Air Temp. °F

Barometer "HG *DWT

@ Ft. Elev.

R = .983
R² = .966
R³ = .950

Tested by J. Hogan Date 10-21-59

Witnessed by A. G. Bellah

Certified by

Page ___ of ___ pages

OFFICE OF THE
RESIDENT OFFICER IN CHARGE OF CONSTRUCTION
CAMP LEJEUNE, NORTH CAROLINA

APPROVED

SUBJECT TO CONTRACT REQUIREMEMTS

CONTRACT NBy 24218 SPEC. NO. 24218/59

DATE: 26 Jan 60

N. C. HARVEY
CDR, CEC, USN
Resident Officer in
Charge of Construction

PER STAGE	1 STAGES	IMP DIA	COLUMN LOSS / SHAFT LOSS	FT / H.P.	FOR	FT	CC ASSY	BHP REQ'D @ / MAX BHP @	GPM / SP GRAV

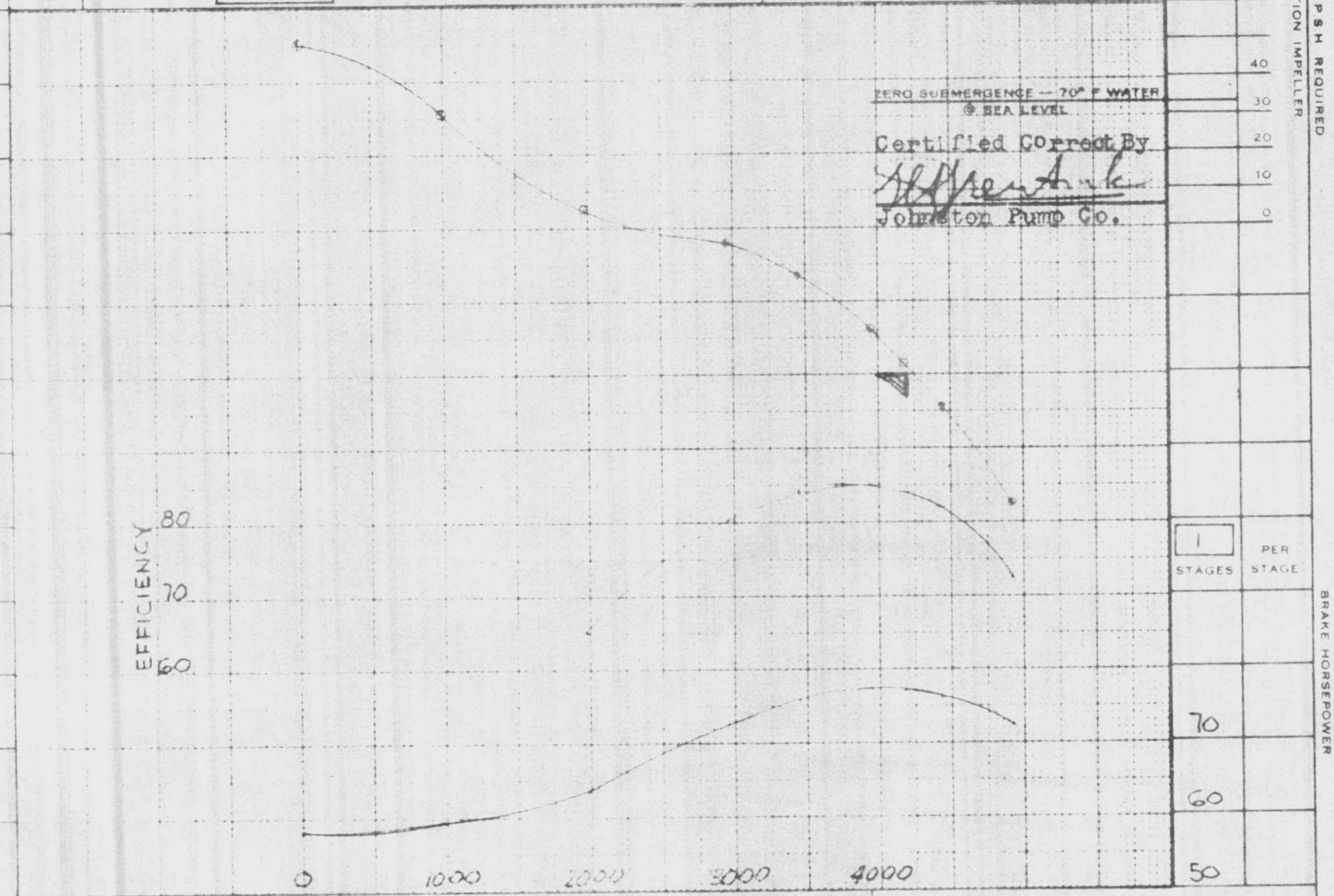

PERFORMANCE BASED ON MULTISTAGE TESTS
MEANING FAR LOW WATER SP. GR. 1.0
FOR SINGLE STAGE MULTIPLY HEAD & EFF. BY
FOR 1 STAGE MULTIPLY HD. & EFF. BY

DATE 10-22-59

JOHNSTON PUMP COMPANY
A division of the Youngstown Sheet and Tube Company
PASADENA, CALIFORNIA

JQ 3863 T A LOVING CO.

20CC TURBINE PUMP
IMPELLER BRONZE
STAGES 1

1175 RPM
BOWL — CAST IRON
CURVE SHEET NO 8793

OFFICE OF THE
RESIDENT OFFICER IN CHARGE OF CONSTRUCTION
CAMP LEJEUNE, NORTH CAROLINA

APPROVED

SUBJECT TO CONTRACT REQUIREMEMTS

CONTRACT NBy 24218 SPEC. NO. 24218159

DATE: 27 Jan 60

N C. HARVEY
CDR, CEC, USN
Resident Officer in
Charge of Construction

JENSTON PUMP COMPANY
172 EAST FOOTHILL BLVD.
PASADENA CALIFORNIA

LABORATORY
TEST DATA SHEET

CURVE NO. 8793 JOB NO. JQ 3863

JOB NAME T. A. Loving Co.

Lab MOTOR 200 HP 6 Pole 60 ~ 3 Phase 440 Volt

IMPELLERS 2000 Type 1 Stage CI,Vit Material 15-23/32 Dia-Exit-Pitch

RATED CONDITION @ 1175 RPM
GPM 4200
Head 60
BHP 75
Sp.Gr.
Eff. 85

WATTMETER Ratio Transformer

BOWLS CI Material Vit Coating SUCTION CASE Bell Type

BEAM # BELLOWS # Span 4

DYNAMOMETER Load Cell 3.145/5250 Scale Max Scale

Impellers Raised 1 XXXX Turn Head 24½x12

GPM 804 x CAP

Head Readings 30 Inches (Before XXXX Charge Head

12" XXXXXX

In Hg	U.S. G.P.M.	Hg	Feet of Head	Feet to Water	V²/2g	Total Dyn Head in Feet	Dynamometer XXXXXXXXXX Reading .716	Input H.P.	B.H.P.	RPM	EFF.	Performance 1 Stage @ 1175 RPM U.S. G.P.M.	Total Head in Feet	B.H.P. @ Sp.Gr.
	0	42.5	105	4		109	85.3		61.1	1197	0	0	105.2	58.0
1.55	1000	42	95		.1	99.1	86.7		62.2	1196	40.3	983	95.6	59.1
.20	2000	35	81		.5	85.5	93.0		66.6	1196	65.0	1968	82.6	63.2
13.94	3000	66.7	75.6		1.1	80.7	106.7		76.3	1195	80.3	2950	78.0	72.5
18.95	3500	62.3	70.5		1.5	76.0	111.6		79.8	1195	84.3	3440	73.4	75.8
21.0	4000	55	62.4		2.0	68.4	113.3		81.2	1195	85.0	3935	66.0	77.2
28.0	4250	50.4	57.2		2.2	63.4	113		81	1195	84.0	4180	61.2	77.0
.35	4500	45.2	51.3		2.5	57.8	112		80.2	1195	82.0	4425	55.8	76.3
38.6	5000	32.3	36.6		3.1	43.7	106.7		76.3	1195	72.5	4920	42.2	72.5

SUBMERGENCE Ft. In.

Water Temp. °F #DWT

Air Temp. °F

Barometer HG

Ft. Elev.

1175/1195 R = .983
R^2 = .966
R^3 = .950

Tested by J. Hogan Date 10-21-59

Witnessed by Alva G. Bellah

Certified by

Page 1 of 1 pages

OFFICE OF THE
RESIDENT OFFICER IN CHARGE OF CONSTRUCTION
CAMP LEJEUNE, NORTH CAROLINA

APPROVED

SUBJECT TO CONTRACT REQUIREMEMTS

CONTRACT NBy 24218 SPEC. NO. 24218/59

DATE: 26 Dec 60

N. C. HARVEY
CDR, CEC, USN
Resident Officer in
Charge of Construction

PER STAGE	1 STAGES	IMP. DIA.	COLUMN LOSS / SHAFT LOSS	FT. / H.P.	FOR FT CC ASSY	BHP REQ'D @ / MAX BHP @	GPM / SP. GRAV

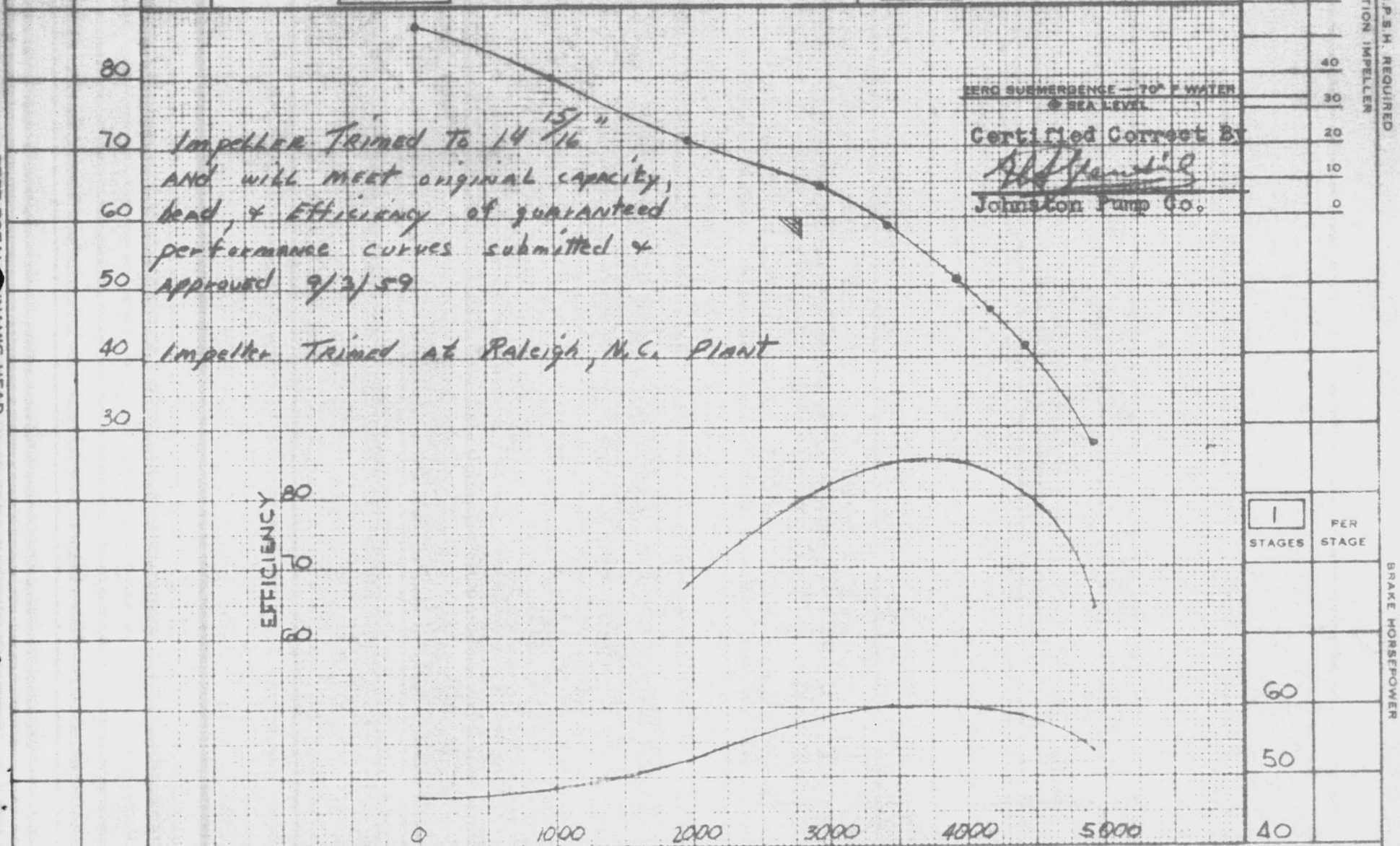

PERFORMANCE BASED ON MULTISTAGE TESTS
PUMPING CLEAR COLD WATER SP. GR. 1.0

FOR 1 STAGE MULTIPLY HEAD & EFF. BY

FOR 1 STAGES, MULTIPLY HD. & EFF. BY

DATE 10-22-59

JOHNSTON PUMP COMPANY
A division of the Youngstown Sheet and Tube Company
PASADENA, CALIFORNIA

JQ 3865 T.A. LOVING Co

2000 TURBINE PUMP — 1175 RPM

IMPELLER — BRONZE — BOWL — CAST IRON

STAGES 1

CURVE SHEET NO 8794

OFFICE OF THE
RESIDENT OFFICER IN CHARGE OF CONSTRUCTION
CAMP LEJEUNE, NORTH CAROLINA

APPROVED

SUBJECT TO CONTRACT REQUIREMEMTS

CONTRACT NBy 24218 SPEC. NO. 24218154

DATE: 27 January

N. C. HARVEY
CDR, CEC, USN
Resident Officer in
Charge of Construction

JOHNSTON PUMP COMPANY
3272 EAST FOOTHILL BLVD.
PASADENA, CALIFORNIA

LABORATORY
TEST DATA SHEET

CURVE NO. 8794 JOB NO. JQ 3865

JOB NAME T. A. Loving Co.

Lab MOTOR 200 HP 6 Pole 60 Cycle 3 Phase 440 Volt

IMPELLERS 20CC Type 1 Stage CI, Vit Material 15¼" Dia-Exit-Pitch

WATTMETER ____ Ratio ____ Transformer

BOWLS CI Material ____ Coating

SUCTION CASE Bell Type

BEAM # ____ BELLOWS# Span 4

DYNAMOMETER Load Cell 3145/5250 Size Mark Constant

Impellers Raised 1 ~~XXXX~~ Turn Head 24⅛x12

GPM = 804 x $\sqrt{\Delta P}$

Head Readings 30 Inches (Before, ~~XXX~~) Discharge Head

RATED CONDITION @1175 RPM
GPM 2800
Head 60
BHP 51.8
Sp.Gr. ____
Eff. 81%

12" ORIFICE VENTURI ΔP IN INCHES OF Hg	U.S. G.P.M.	Hg Column Hg	Hg Column FEET OF HEAD	FEET TO WATER	$\frac{V^2}{2g}$	TOTAL DYN. HEAD IN FEET	DYNAMOMETER ~~XXXXXXXX~~ READING .717	INPUT H.P.	B.H.P.	RPM	EFF.	Performance 1 Stage @ 1175 RPM U.S. G.P.M.	TOTAL HEAD IN FEET	B.H.P. @ Sp.Gr.
*	0	37.5	86.8	4		90.8	69.5		49.8	1198		0	87.6	47.2
* 1.55	1000	34.0	78.8		.1	82.9	72.0		51.6	1198	40.6	982	80.0	48.8
6.20	2000	60.95	69.0		.5	73.5	76.6		55.0	1197	67.5	1964	70.9	52.1
13.94	3000	54.4	61.6		1.1	66.7	86.3		61.9	1197	81.6	2946	64.3	58.6
18.95	3500	49.0	55.5		1.5	61.0	88.5		63.5	1197	85	3435	58.8	60.1
24.8	4000	41.5	47.1		2.0	53.1	87.7		63.0	1197	85.2	3925	51.2	59.6
28.0	42.50	37.4	42.4		2.2	48.6	87.5		62.7	1197	83.3	4170	46.8	59.4
31.35	4500	32.4	36.7		2.5	43.2	85.7		61.5	1197	80.0	4420	41.6	58.3
38.6	5000	19.1	21.7		3.1	28.8	79.0		56.7	1197	64.0	4910	27.8	53.7

SUBMERGENCE ____ Ft. ____ In.

Water Temp. ____ °F

Air Temp. ____ °F

Barometer ____ "HG

@ ____ Ft. Elev.

*DWT

$\frac{1175}{1197} = R = .982$

$R^2 = .964$

$R^3 = .947$

Tested by J. Hogan Date 10-21-59

Witnessed by A. G. Bellah

Certified by ____

Page 1 of 1 pages

OFFICE OF THE
RESIDENT OFFICER IN CHARGE OF CONSTRUCTION
CAMP LEJEUNE, NORTH CAROLINA

APPROVED

SUBJECT TO CONTRACT REQUIREMEMTS

CONTRACT NBy 24218 SPEC. NO. 24218159

DATE: 27 Jan 60

N. C. HARVEY
CDR, CEC, USN
Resident Officer in
Charge of Construction

DEPARTMENT OF THE NAVY
Resident Officer in Charge
Bureau of Yards and Docks Contracts
Marine Corps Base, Camp Lejeune, North Carolina

In reply refer to:
4E-50:WFU:ejs
NBy-24218
28 March 1960

T. A. Loving and Company
P. O. Box 738
Goldsboro, North Carolina

Re: Contract NBy- 24218, Rehabilitation of Raw Water Supply, Marine Corps Base, Camp Lejeune, North Carolina

Gentlemen:

We are returning X herewith, ____ under separate cover, the following shop drawings or data sheets with action indicated:

No. of Dwgs	Dwg No.	Description	Action
1 ea.	H-1828-C, H-1829-C, H-1830-C, H-1825-D & H-1826-D	Johnston Pump Co. dwgs of pump details	Approved by my ltr 16 Mar 60

Note: An additional set of the approved drawings is returned for your record.

Very truly yours,

W. F. Uber Jr.

W. F. UBER, Jr.
ENS CEC USN
Assistant Resident Officer
in Charge of Construction

Copy to:
DPWO FIVE (C-320)(w/copy dwgs)
4E-50 (w/copy dwgs)
Records (w/copy dwgs)
Board

OICC-ROICC
MARINE CORPS BASE, CAMP LEJEUNE, N. C.

No. 389
Date 23 Mar 60

From T. A. Loving and Company

Subject NBy-24218 - Additional sets of drawings Johnston Pumps

-Code-

1. Action
2. Information
3. Prepare reply for OICC/ROICC
4. Prepare reply for MCB
5. Prepare estimate
6. Investigate
7. Retain copy
8. File
9. Denote action and return Buck Tag to Admin. Div.
10. _____

ROUTING	CODE	SEQUENCE	INITIAL	DATE
CODE 4E-10				
CODE 4E-11				
CODE 4E-20				
CODE 4E-20A				
CODE 4E-25				
CODE 4E-30				
CODE 4E-50	/	/	[illegible]	3/24
CODE 4E-100				
CODE 4E-200				
CODE 4E-300				
CODE 4E-500				
CODE 4E-510				
CODE 4E-520				
ADMIN. FILE				

REMARKS:

(Routing slip will be returned to Central Office with correspondence attached unless otherwise indicated)

T. A. LOVING AND COMPANY

GENERAL CONTRACTORS

GOLDSBORO, N. C.

March 21, 1960

Resident Officer in Charge of Construction
Bureau of Yards and Docks
Marine Corps Base
Camp Lejeune, North Carolina

Re: 4E-50: WFU: ejs
NBy-24218
16 March 1960

Gentlemen:

Enclosed are four (4) additional sets of drawings as requested in referenced letter.

Very truly yours,

T. A. LOVING AND COMPANY

Robert S. Hults

By: Robert S. Hults
Office Manager-Utility Dept.

RSH/lm
Enclosures

1 - RT
1 - OPWO
1 - 4E-50
pkl
1,2
BI

1 - RT
~~1 - OPWO~~
2 - RPH
4

DWG. A-1272 -S

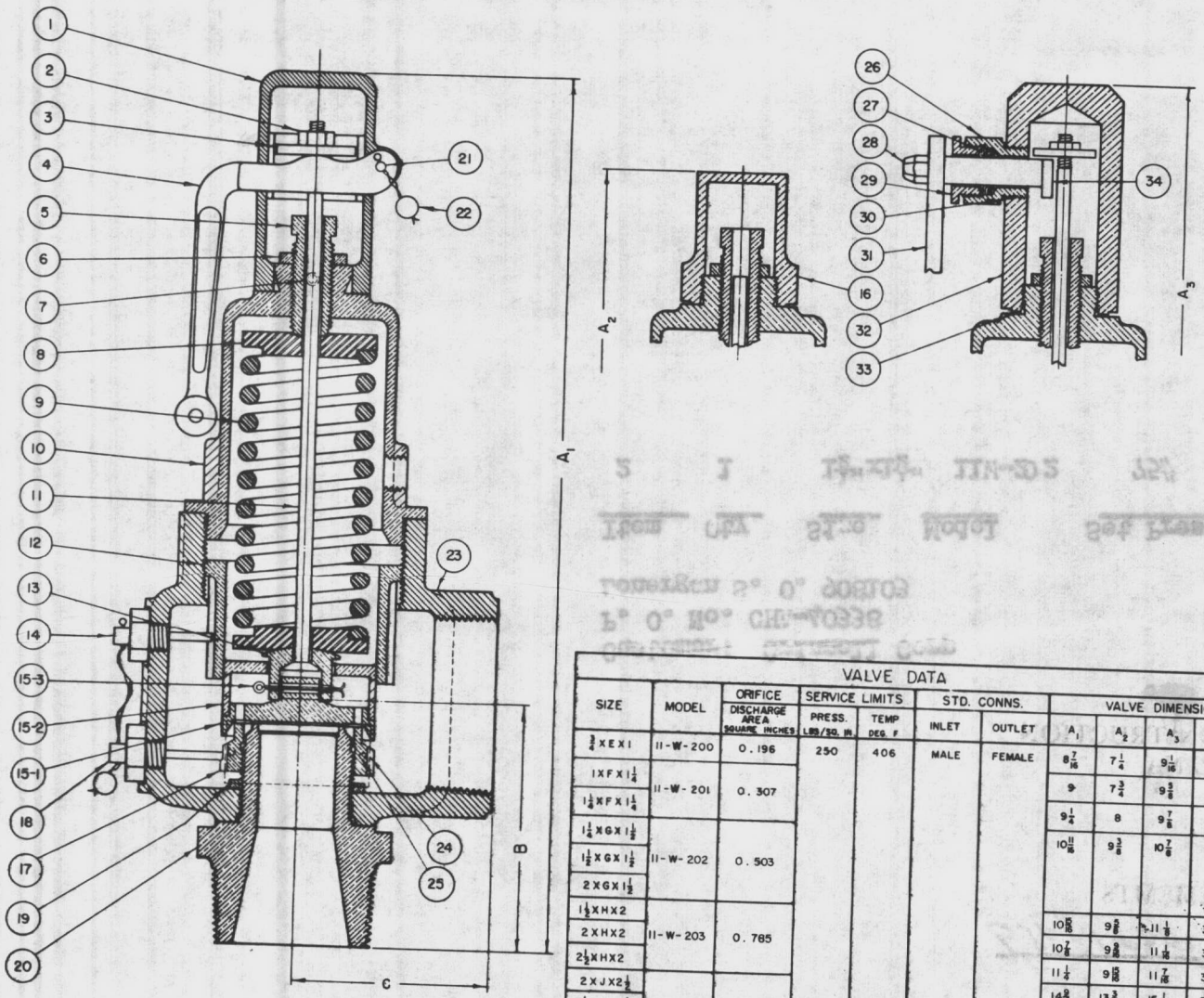

LIST OF MATERIAL

PC. NO	NAME OF PIECE	MATERIAL
1	CAP (PLAIN LIFTING LEVER)	MALLEABLE IRON
▲ 2	CASTLE NUT	COLD ROLLED STEEL
▲ 3	LIFTING DISC	ROLLED BRASS
4	LEVER	MALLEABLE IRON
5	COMPRESSION SCREW	ROLLED BRASS
▲ 6	LOCKNUT	ROLLED BRASS
7	CAP SCREW	ROLLED BRASS
▲ 8	SPRING STEPS	COLD ROLLED STEEL
▲ 9	SPRING	CARBON STEEL
10	BONNET	CAST IRON
▲ 11	STEM	COLD ROLLED STEEL
12	GUIDE	FORGED COPPER ALLOY
13	HOLDER BUSHING	ROLLED BRASS
14	GUIDE PIN	ROLLED BRASS
15-1	DISC	FORGED COPPER ALLOY
15-2	DISC HOLDER	FORGED COPPER ALLOY
15-3	COTTER PIN	ROLLED BRASS
16	CAP (PLAIN SCREWED)	ROLLED BRASS
17	WARN RING	FORGED COPPER ALLOY
18	WARN RING SCREW	ROLLED BRASS
▲ 19	BASE NUT	COLD ROLLED STEEL
20	BASE	FORGED COPPEP ALLOY
▲ 21	LEVER PIN	COLD ROLLED STEEL
22	SEAL	LEAD
23	BODY	CAST IRON
24	NAMEPLATE	SHEET BRASS
25	NAMEPLATE DRIVE SCREWS	CARBON STEEL
26	PACKING GLAND HOUSING	ROLLED BRASS
27	PACKING	TEFLON
▲ 28	LEVER NUT	COLD ROLLED STEEL
29	PACKING GLAND	ROLLED BRASS
30	GASKET	ASBESTOS
▲ 31	LEVER	COLD ROLLED STEEL
32	CAP (PACKED LIFTING LEVER)	ROLLED BRASS
33	GASKET	ASBESTOS
34	SHAFT	ROLLED BRASS

▲ THESE PARTS TO BE CADMIUM PLATED.

VALVE DATA

SIZE	MODEL	ORIFICE DISCHARGE AREA SQUARE INCHES	SERVICE LIMITS PRESS. LBS/SQ. IN.	SERVICE LIMITS TEMP DEG. F	STD. CONNS. INLET	STD. CONNS. OUTLET	VALVE DIMENSIONS A_1	A_2	A_3	B	C
$\frac{3}{4}$ X E X 1	11-W-200	0.196	250	406	MALE	FEMALE	$8\frac{7}{16}$	$7\frac{1}{4}$	$9\frac{1}{16}$	$2\frac{1}{8}$	$1\frac{3}{4}$
1 X F X $1\frac{1}{4}$	11-W-201	0.307					9	$7\frac{3}{4}$	$9\frac{5}{8}$	$2\frac{9}{16}$	$2\frac{1}{16}$
$1\frac{1}{4}$ X F X $1\frac{1}{4}$							$9\frac{1}{4}$	8	$9\frac{7}{8}$	$2\frac{13}{16}$	$2\frac{1}{16}$
$1\frac{1}{4}$ X G X $1\frac{1}{2}$	11-W-202	0.503					$10\frac{11}{16}$	$9\frac{3}{8}$	$10\frac{7}{8}$	$3\frac{1}{16}$	$2\frac{1}{8}$
$1\frac{1}{2}$ X G X $1\frac{1}{2}$											
2 X G X $1\frac{1}{2}$											
$1\frac{1}{2}$ X H X 2	11-W-203	0.785					$10\frac{15}{16}$	$9\frac{5}{8}$	$11\frac{1}{8}$	$3\frac{5}{16}$	$2\frac{3}{16}$
2 X H X 2							$10\frac{7}{8}$	$9\frac{3}{4}$	$11\frac{1}{16}$	$3\frac{1}{4}$	$2\frac{3}{16}$
$2\frac{1}{2}$ X H X 2							$11\frac{1}{4}$	$9\frac{15}{16}$	$11\frac{7}{16}$	$3\frac{5}{8}$	$2\frac{3}{16}$
2 X J X $2\frac{1}{2}$	11-W-204	1.287					$14\frac{3}{16}$	$13\frac{3}{4}$	$15\frac{1}{8}$	$3\frac{11}{16}$	$3\frac{1}{8}$
$2\frac{1}{2}$ X J X $2\frac{1}{2}$							$14\frac{3}{4}$	$13\frac{15}{16}$	$15\frac{15}{16}$	$3\frac{7}{8}$	$3\frac{1}{8}$
3 X J X $2\frac{1}{2}$											

SPARE OR REPAIR PARTS

DISC (PC. NO. 15-1) LONERGAN PART NO.	BASE (PC. NO. 20) LONERGAN PART NO.
18.1.157	53.1.46
18.1.158	53.1.47
	53.1.68
	53.1.48
18.1.159	53.1.63
	53.1.62
18.1.160	53.1.49
	53.1.61
	53.1.60
	53.1.50
18.1.137	53.1.59
	53.1.68

SCALE

CERTIFIED PRINT
ALL DIMENSIONS GIVEN ARE TRUE AND CORRECT IN ALL PARTICULARS
J. E. LONERGAN COMPANY
ENGINEERING DEPT.
PER William A. Frack Jr.

COMPOSITE DRAWING OF
11-W-200 SERIES SAFETY VALVE

J. E. LONERGAN COMPANY
211-217 RACE STREET PHILADELPHIA, PA

DATE 6 JAN 1964 Revised 7/20/66
DRAWN C.W. TRACED W.R.
CHECKED APPROVED
PRINT ISSUED DWG. A-1272-S

Customer: Grinnell Corp
P. O. No. CHM-40338
Lonergan S. O. 908103

Item	Qty	Size	Model	Set Pressure
2	1	1½"x1½"	11W-D2	75#

Customer: Grinnell Corp
P. O. No. CHM-40338
Lonergan S. O. 908103

Item	Qty	Size	Model
2	1	1½"x1½"	11W

OFFICE OF THE
RESIDENT OFFICER IN CHARGE OF CONSTRUCTION
CAMP LEJEUNE, NORTH CAROLINA

APPROVED

SUBJECT TO CONTRACT REQUIREMEMTS

CONTRACT NBy 24218 SPEC. NO. 24218/59

DATE: AUG 13 1959

N. C. HARVEY
CDR, CEC, USN
Resident Officer in
Charge of Construction

PUMP #1

GUARANTEED PERFORMANCE CURVE

NOTE: ALL COLUMN LOSSES ARE INCLUDED

JOHNSTON: REF. NO. JQ-3865

DEALER: REF. NO.

CUSTOMER: T.A. LOVING CO. REF. NO.

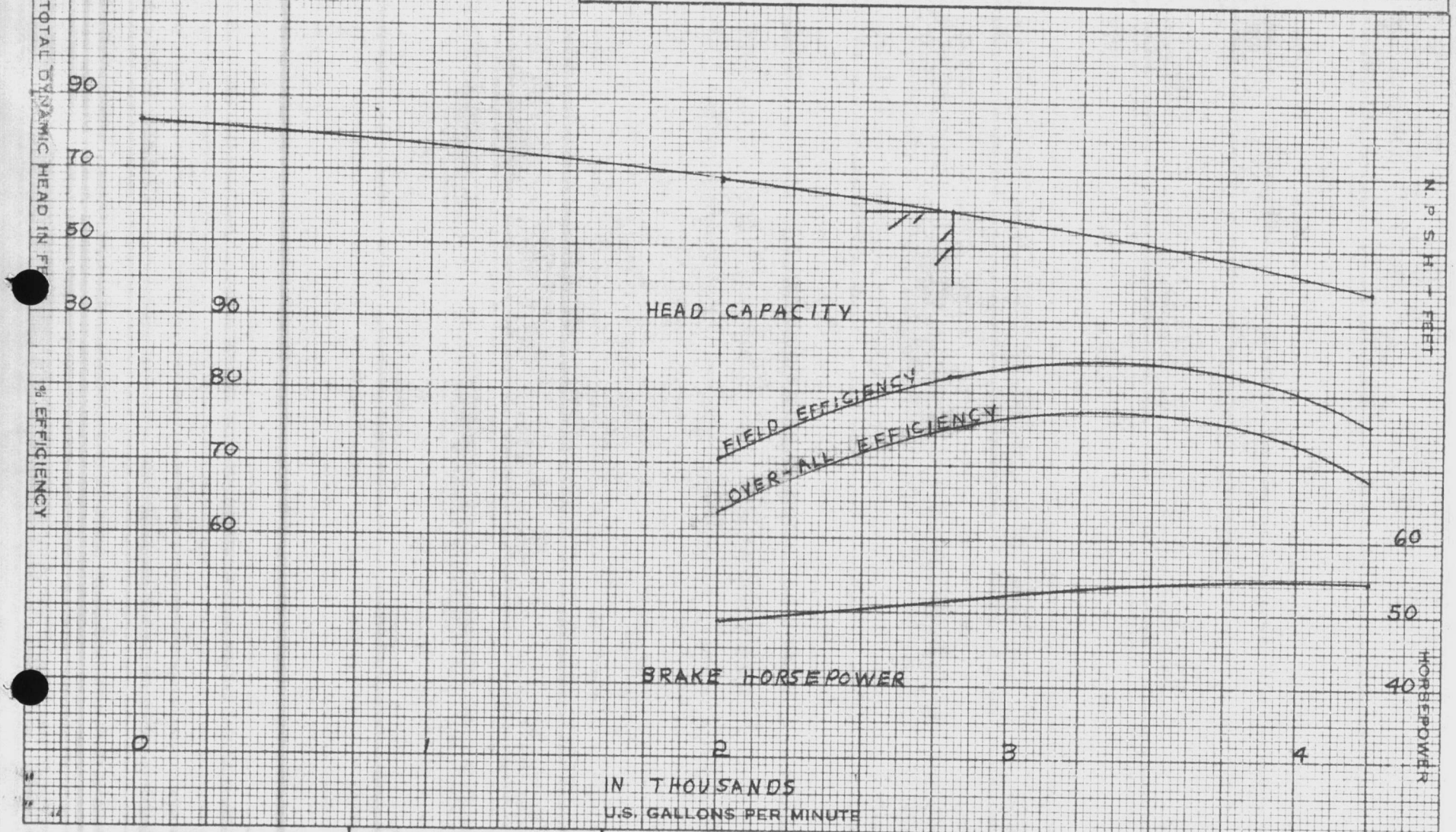

THE CAPACITY, HEAD AND EFFICIENCY GUARANTEE IS FOR THE DESIGNATED POINT ONLY: IT IS BASED ON SHOP TESTS. WHEN HANDLING CLEAR, FRESH WATER AT A TEMPERATURE OF NOT OVER 85° F. AND UNDER SUCTION CONDITIONS AS SPECIFIED IN THE CONTRACT.

IMPELLER C.I. VIT. DIA.

BOWLS C.I. VIT.

LIQUID WATER

SP. GR. 1.0 @ 85°F

DATE: 13AUG59 BY: CHET

JOHNSTON PUMP CO.
DIVISION OF YOUNGSTOWN SHEET & TUBE

VERTICAL PUMPS

50TH YEAR 1909-1959

PASADENA • CALIFORNIA • U.S.A.

PERFORMANCE 1 STAGE

20CC TURBINE PUMP

1180 R.P.M.

PUMP # 2

GUARANTEED PERFORMANCE CURVE

NOTE: ALL COLUMN LOSSES ARE INCLUDED

JOHNSTON: REF. NO. JQ 3864

DEALER: REF. NO.

CUSTOMER: T.A. LOYING CO. REF. NO.

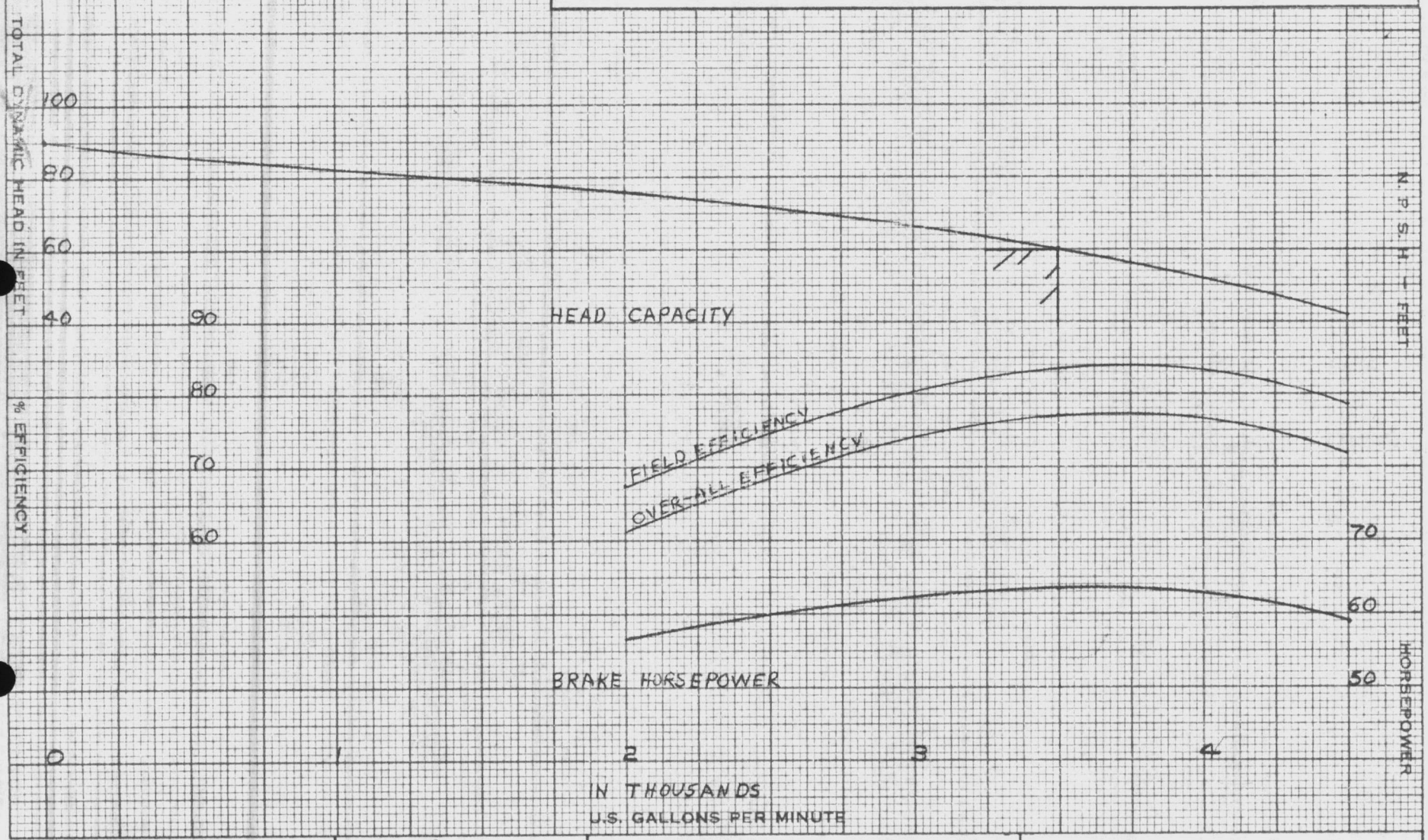

THE CAPACITY, HEAD AND EFFICIENCY GUARANTEE IS FOR THE DESIGNATED POINT ONLY: IT IS BASED ON SHOP TESTS. WHEN HANDLING CLEAR, FRESH WATER AT A TEMPERATURE OF NOT OVER 85° F. AND UNDER SUCTION CONDITIONS AS SPECIFIED IN THE CONTRACT.

IMPELLER C.I. VIT. DIA.

BOWLS C.I. VIT.

LIQUID WATER

SP. GR. 1.0 @ 85°F

DATE: 13 AUG 57 BY: CHET

JOHNSTON PUMP CO.
DIVISION OF YOUNGSTOWN SHEET & TUBE

VERTICAL PUMPS

50TH YEAR 1909-1959

PASADENA • CALIFORNIA • U.S.A.

PERFORMANCE 1 STAGE

2000 TURBINE PUMP

1180 R.P.M.

PUMP #3

GUARANTEED PERFORMANCE CURVE

NOTE: ALL COLUMN LOSSES ARE INCLUDED

JOHNSTON: REF. NO. JQ 3863

DEALER: REF. NO.

CUSTOMER: REF. NO.

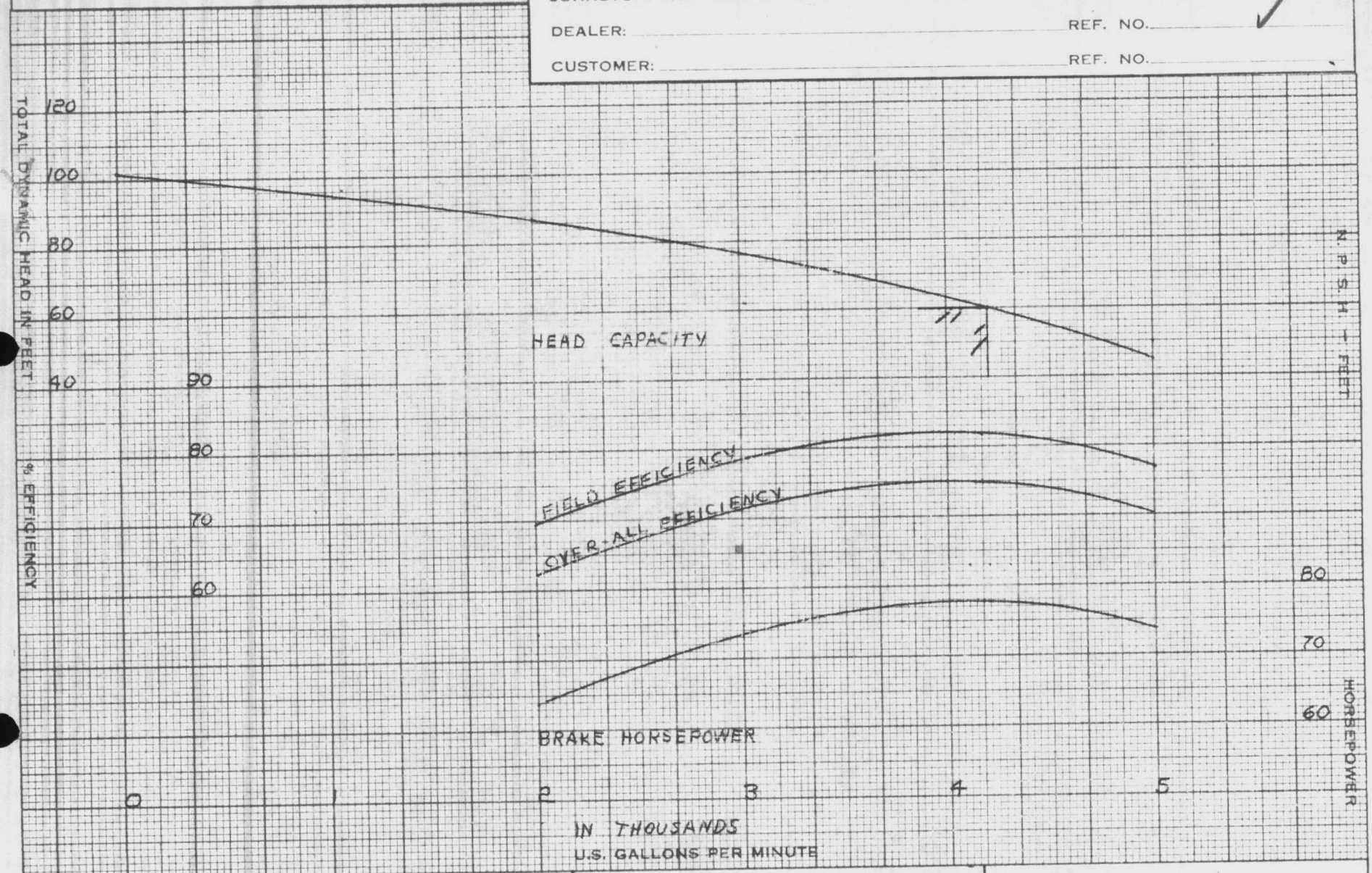

THE CAPACITY, HEAD AND EFFICIENCY GUARANTEE IS FOR THE DESIGNATED POINT ONLY: IT IS BASED ON SHOP TESTS. WHEN HANDLING CLEAR, FRESH WATER AT A TEMPERATURE OF NOT OVER 85° F. AND UNDER SUCTION CONDITIONS AS SPECIFIED IN THE CONTRACT.

IMPELLER C.I. VIT DIA.

BOWLS C.I. VIT.

LIQUID WATER

SP. GR. 1.0 @ 85°F

DATE: 13AUG59 BY: CHET

JOHNSTON PUMP CO.
DIVISION OF YOUNGSTOWN SHEET & TUBE

VERTICAL PUMPS

50TH YEAR 1909-1959

PASADENA • CALIFORNIA • U.S.A.

PERFORMANCE 1 STAGE

20CC TURBINE PUMP

1180 R.P.M.

Drg. No. 5579 18" A-24805-02 Improved Gate Valve - Hub End - NRS. - Bevel Geared W/Gear Case - 150# W.P. - A.W.W.A.
18" A-24806-02 " " " " " " Flange End

Scale: 3" = 12"

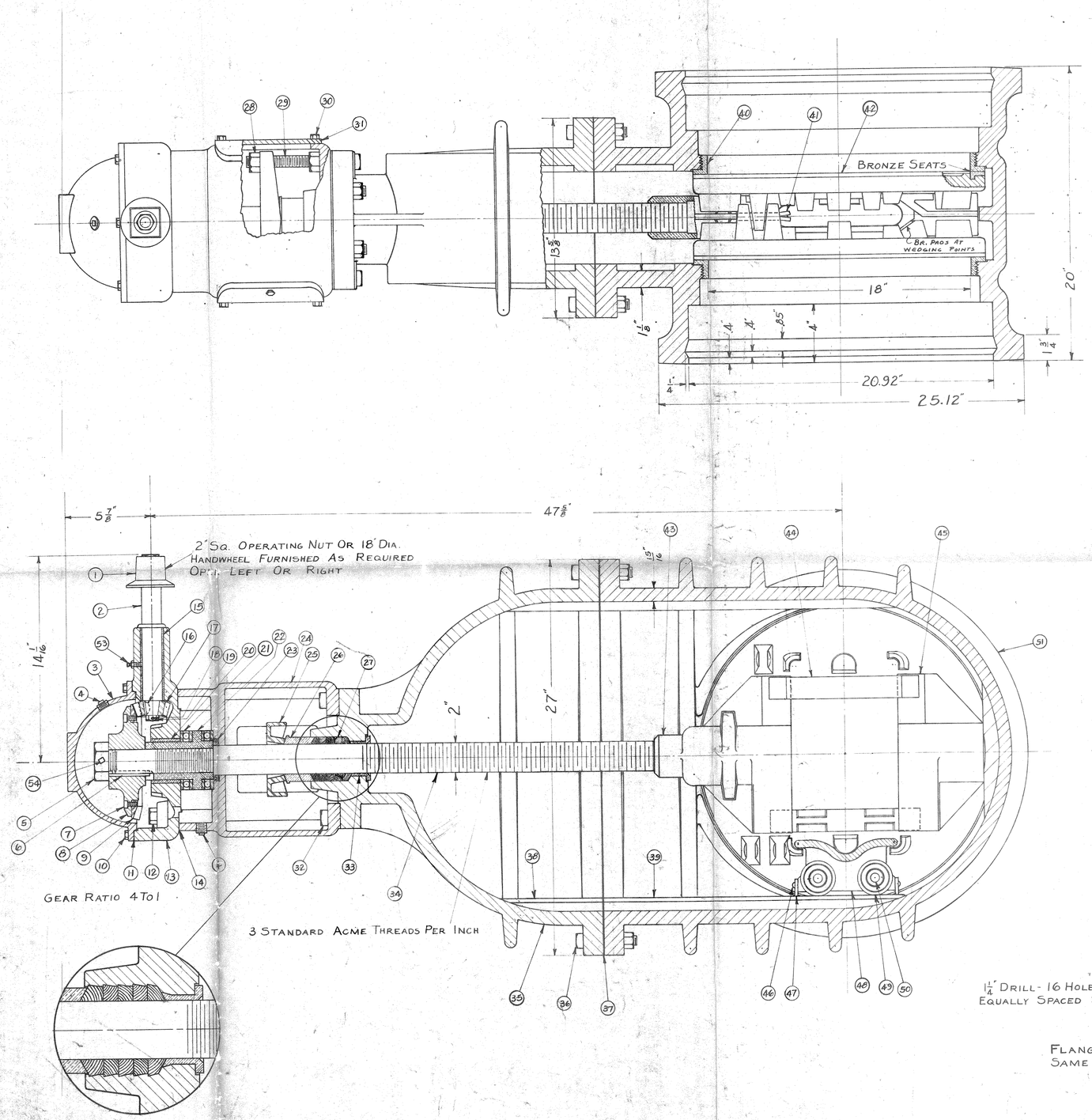

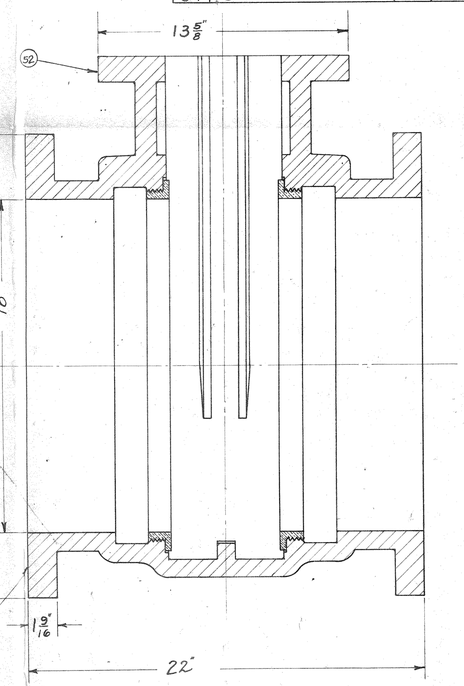

Flanged End Gate Valve Otherwise Same As Hub End Valve

Parts List

Item	Description	No. Req'd	Mat'l	
1	Operating Nut	1	C.I.	
2	Pinion Shaft	1	Br.	
3	Gear Case Cover	1	C.I.	
4	Pipe Plug	2	C.I.	
5	Hold Down Nut	1	Br.	
6	Key	1	Stl.	
7	Screw	10	Stl.	
8	Ring Gear Hub	1	C.I.	
9	Ring Gear	1	Stl.	Hardened
10	Cap Screw	6	C.P.S.	
11	Gear Case Gasket	1	O.Pper	
12	Cap Screw	6	C.R.S.	
13	Gear Case	1	C.I.	
14	Standard Gasket	1	O.Pper	
15	Bushing	1	Br.	
16	Key	1	Stl.	
17	Bevel Pinion	1	Stl.	Hardened
18	Cotter Pin	1	Stl.	
19	Nut	1	Stl.	
20	Bushing	1	Br.	
21	Ball Bearing	2	Stl.	
22	Thrust Collar	1	Br.	
23	Oil Seal	1	K	
24	Standard	1	C.I.	
25	Gland Plate	1	M.I.	
26	Gland	1	Br.	
27	Packing	5	L.Flx	
28	Stuff Box Bolt Nut	4	Br.	
29	Stuffing Box Bolt	2	C.P.S.	
30	Cap Screw	2	C.P.S.	
31	Standard Cover	2	C.I.	
32	Flange Bolt	4	C.P.S.	
33	Bushing	1	Br.	
34	Stem	1	Br.	
35	Bonnet	1	C.I.	
36	Joint Bolt	20	C.P.S.	
37	Joint Gasket	1	C.R.	
38	Bonnet Track	1	Br.	
39	Body Track	1	Br.	
40	Seat Ring	2	Br.	
41	Disc Pin	2	Br.	
42	Disc	2	C.I.	
43	Top Wedge Nut	1	Br.	
44	Side Spreader	2	Br.	
45	Bottom Wedge	1	Br.	
46	Screw	4	Br.	
47	Track Scraper	2	Br.	
48	Roller Carriage	1	C.I.	
49	Roller	2	Br.	
50	Roller Shaft	2	Br.	
51	Body-Hub End	1	C.I.	
52	Body-Flange End	1	C.I.	
53	Alemite Fitting	1	Stl.	
54	Set Screw	1	C.P.S.	

Office of the Resident Officer in Charge of Construction
Camp Lejeune, North Carolina

APPROVED
Subject to contract requirements
Contract No. 2-2-2 Spec. No. 2-2-2
Date: AUG 13 1959
N. C. Harvey
CDR, CEC, USN
Resident Officer in Charge of Construction

Drawn By	JWW	12-6-48	APPROVED
Traced "	JWW	12-6-48	
Checked "	WRD	12-14-48	
Passed "			

MUELLER CO.
CHATTANOOGA, TENN.

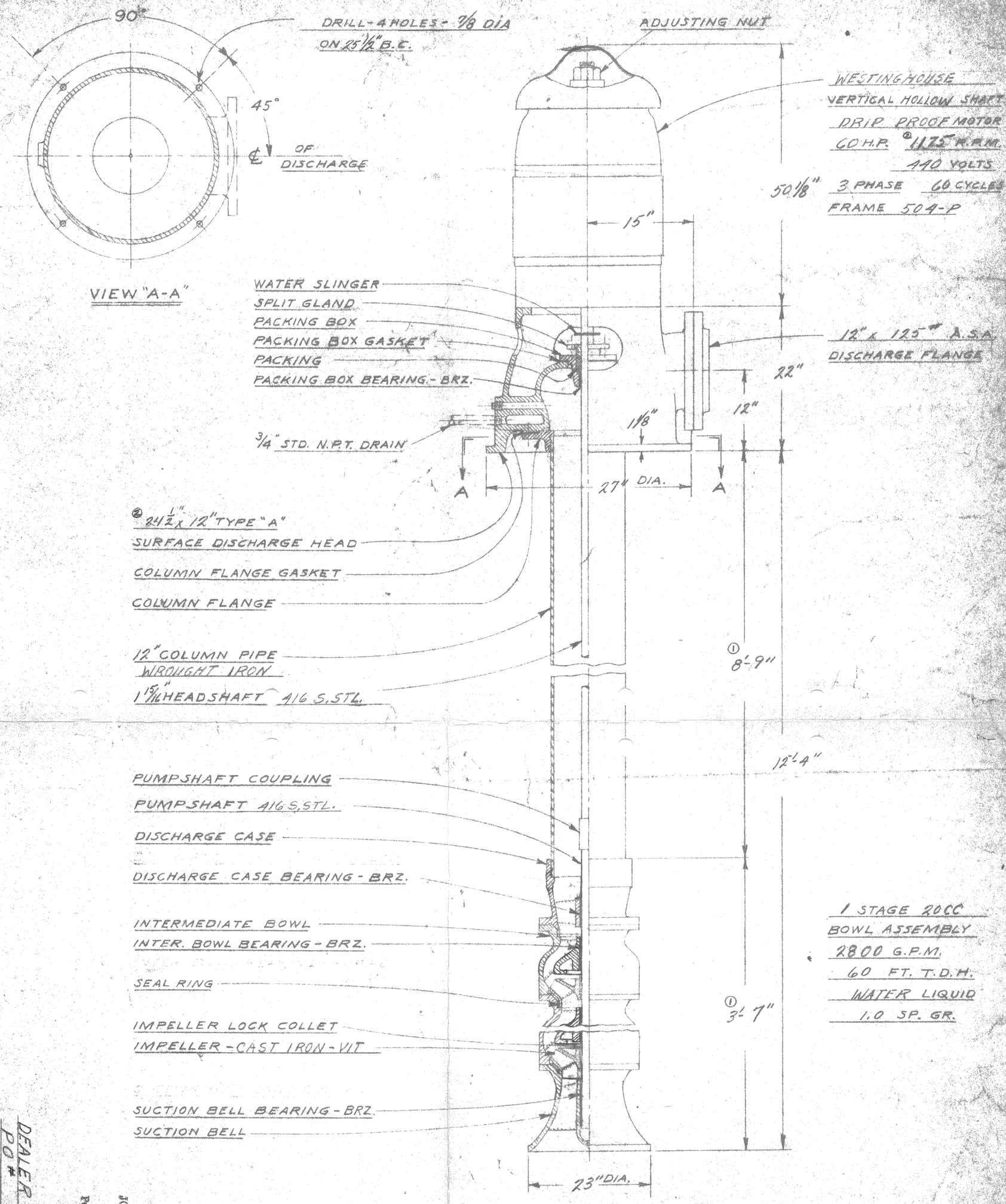

SECTIONAL ILLUSTRATION — VERTICAL TURBINE PUMP

DEALER T.A. LOVING & COMPANY
PO # 870
JOHNSTON SERIAL NO. JD-3863

NO.	REVISIONS	APP.	DATE
1	REVISED TO WRITE	TRE	1-15-62

JOHNSTON TURBINE PUMPS
LOS ANGELES 11, CALIF. U.S.A.

SCALE NONE
DRAWN J.A.E. DATE 8-7-57
CHECKED S.T. 8-14-57
APPROVED

PART NUMBER
MATERIAL
PATTERN NUMBER
PATTERN NUMBER

THIS PRINT CERTIFIED CORRECT BY
JOHNSTON PUMP COMPANY
A DIVISION OF THE YOUNGSTOWN SHEET AND TUBE COMPANY
Per

TOLERANCE
FRACTIONAL ± 1/64 UNLESS NOTED

OFFICE OF THE
RESIDENT OFFICER IN CHARGE OF CONSTRUCTION
CAMP LEJEUNE, NORTH CAROLINA

APPROVED

SUBJECT TO CONTRACT REQUIREMEMTS

CONTRACT NO. 24218 SPEC. NO. 24218159

DATE: 28 Mar 60

N. C. HARVEY
CDR, CEC, USN
Resident Officer in
Charge of Construction

ISSUED
FEB 4 1960
ENG. DEPT.

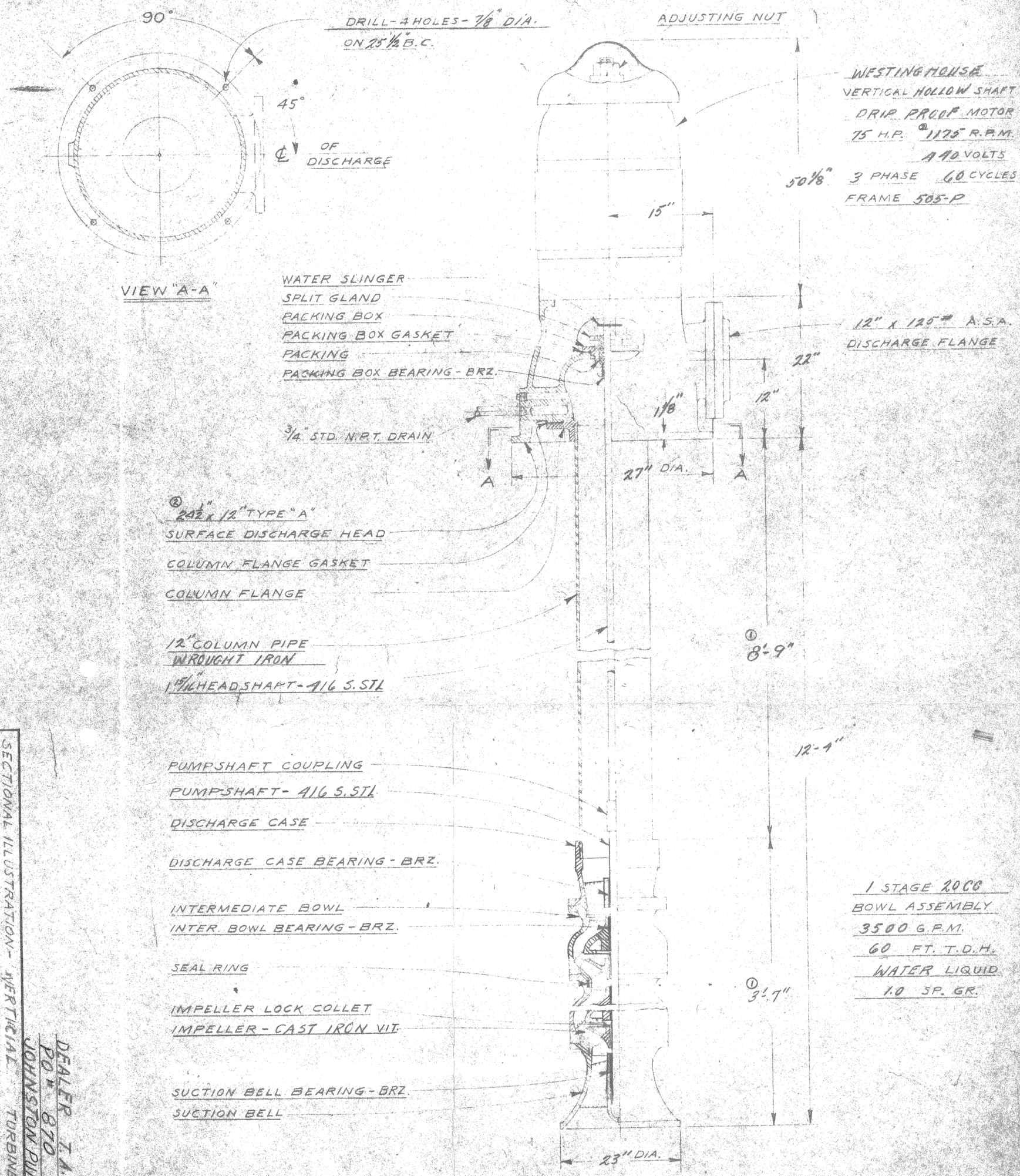

DEALER T. A. LOVING COMPANY
PO # 870
JOHNSTON PUMP SERIAL NO. J03864

SECTIONAL ILLUSTRATION - VERTICAL TURBINE PUMP - W.L.

NO.	REVISIONS	APP.	DATE
2	REVISED TO DATE	JDS	2-3-60
1	REVISED TO DATE	JDE	1-15-60

JOHNSTON TURBINE PUMPS
LOS ANGELES 11, CALIF. U.S.A.

SCALE NONE			
DRAWN	JAE	DATE	8-7-59
CHECKED	ST		8-15-59
APPROVED			

PART NUMBER
MATERIAL
PATTERN NUMBER
DRAWING NUMBER H-1829-C

THIS PRINT CERTIFIED CORRECT BY JOHNSTON PUMP COMPANY
A DIVISION OF THE YOUNGSTOWN SHEET AND TUBE COMPANY
Per _____

TOLERANCE FRACTIONAL ± 1/64 UNLESS NOTED

JAN 15 1960

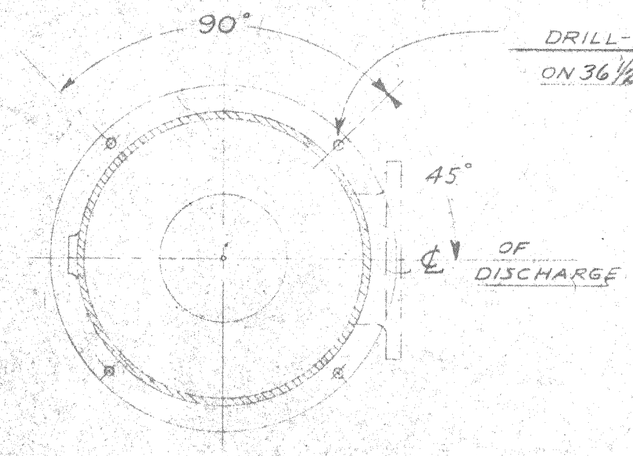

VIEW "A-A"

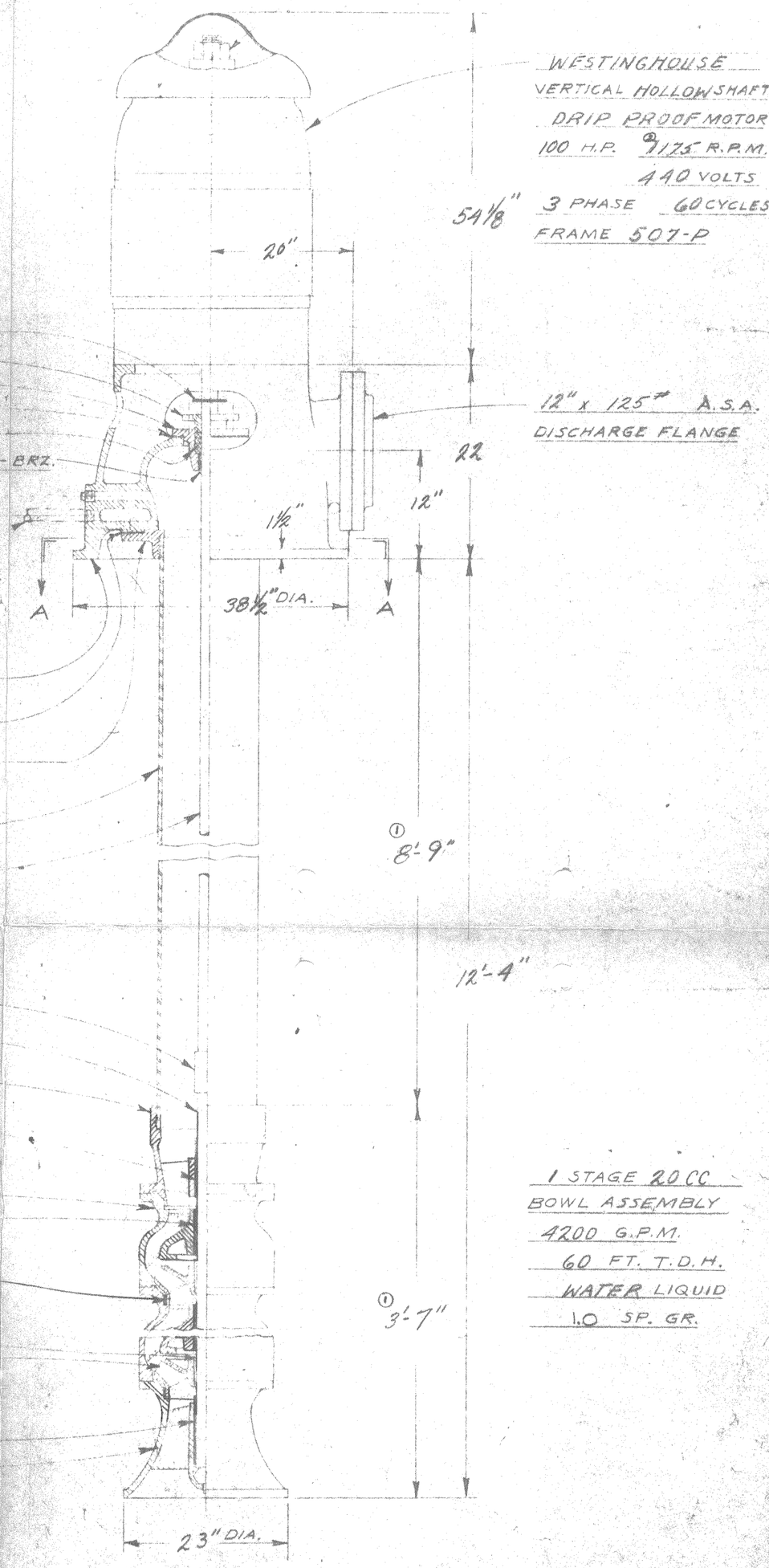

1 STAGE 20 CC
BOWL ASSEMBLY
4200 G.P.M.
60 FT. T.D.H.
WATER LIQUID
1.0 SP. GR.

THIS PRINT CERTIFIED CORRECT BY JOHNSTON PUMP COMPANY
A DIVISION OF THE YOUNGSTOWN SHEET AND TUBE COMPANY
Per _____

DEALER T.A. LOWING & COMPANY
P.O. # 870
JOHNSTON PUMP SERIAL NO. JD-3863
PUMP - W.L.

SECTIONAL ILLUSTRATION - VERTICAL TURBINE PUMP

NO.	REVISIONS	APP.	DATE
2	REVISED TO DATE	TDF	2-3-60
1	REVISED TO DATE	TDF	1-15-60

JOHNSTON TURBINE PUMPS
LOS ANGELES 11, CALIF., U.S.A.

JAN 15 1960

SCALE NONE
DRAWN UDF 8-9-59
CHECKED ST 8-13-59
APPROVED

MATERIAL
PATTERN NUMBER
PART NUMBER
DRAWING NUMBER H-7830-C

TOLERANCE
FRACTIONAL ± 1/64 UNLESS NOTED

OFFICE OF THE
RESIDENT OFFICER IN CHARGE OF CONSTRUCTION
CAMP LEJEUNE, NORTH CAROLINA

ENG. DEPT.
ISSUED

APPROVED

SUBJECT TO CONTRACT REQUIREMEMTS

CONTRACT NO. 12418 SPEC. NO. 24218/59

DATE: 25 March 60

N. C. HARVEY
CDR, CEC, USN
Resident Officer in
Charge of Construction

DEPARTMENT OF THE NAVY
RESIDENT OFFICER IN CHARGE
BUREAU OF YARDS AND DOCKS CONTRACTS
Marine Corps Base, Camp Lejeune, North Carolina

IN REPLY REFER TO:
4E-51:MDB:ajs
NBy-24218
13 October 1959

T. A. Loving and Company
P. O. Box 738
Goldsboro, North Carolina

Re: Contract NBy- 24218, Rehabilitation of Raw Water Supply, Marine Corps Base, Camp Lejeune, North Carolina

Gentlemen:

We are returning ___ herewith, _____ under separate cover the following shop drawings or data sheets with action indicated:

No. of Dwgs.	Dwg. No.	Description	Action
4	—	Westinghouse Electric Corp. dwg of controller wiring diagram on T. A. Loving's shop orders 19-X-27 and 19-Y-28.	Approved, as noted, subject to contract requirements

Note: Proper contacts should be included to afford remote control from the push-button station to be located in the water plant.

Very truly yours,

D. M. KLEIN
LTJG CEC USN
Assistant Resident Officer
in Charge of Construction

Copy to:
DPWO FIVE (C-320)(w/copy encl)

L. E. Wooten and Co. (w/copy encl)
306 So. Dawson St., Raleigh, N. C.

4E-520 (w/copy encl)
4E-51 (w/copy encl)
Records (w/2copies encl)
Board

OICC-ROICC
MARINE CORPS BASE, CAMP LEJEUNE, N. C.

No. 302

Date 10-8-59

From L. E. Wooten & Co.

Subject NBy-24218 Westinghouse Elec. Corp. Dwgs.

-CODE-

1. Action
2. Information
3. Prepare reply for OICC/ROICC
4. Prepare reply for MCB
5. Prepare estimate
6. Investigate
7. Retain copy
8. File
9. _____

ROUTING	CODE	SEQUENCE	INITIAL	DATE
CODE 4E-10				
CODE 4E-10A				
CODE 4E-15				
CODE 4E-16				
CODE 4E-20				
CODE 4E-40				
CODE 4E-50	1	1	Lem	
CODE 4E-51			RDP	
CODE 4E-100				
CODE 4E-200				
CODE 4E-300				
CODE 4E-400				
CODE 4E-500				
CODE 4E-510				
CODE 4E-520				
CONTR FILES				

REMARKS:

*(Routing slip will be returned to Central Office with correspondence attached unless otherwise indicated)

TAB PLACEMENT HERE

DESCRIPTION:

20

☐ Tab page did not contain hand written information

☒ Tab page contained hand written information
*Scanned as next image

Confidential Records Management, Inc.
New Bern, NC
1-888-622-4425
9/08

CIVIL, ELECTRICAL, MECHANICAL, STRUCTURAL AND SANITARY ENGINEERING SERVICES

L. E. WOOTEN AND COMPANY
CONSULTING ENGINEERS
RALEIGH, N. C.

October 7, 1959

Department of the Navy
Resident Officer in Charge
Bureau of Yards and Docks Contracts
Marine Corps Base
Camp Lejeune, North Carolina

RE: 4E-51:JFM:er, NBy-24218, Rehabilitation of Raw Water Supply, Marine Corps Base, Camp Lejeune, North Carolina

Gentlemen:

We return herewith Westinghouse Electric Corporation's drawing of controller wiring diagram transmitted to us by your letter dated 28 September 1959 subject as above. The two starters indicated are approved without objection, however the contractor should be notified that proper contacts should be included to afford remote control from the push-button station to be located in the water plant.

Very truly yours,

L. E. WOOTEN AND COMPANY

By L. E. Wooten
L. E. Wooten

RFR/apb
Enclosure

ROUTING ORDER

		INIT
1	4E-50	
2		
3		
4		
5		
	ORIG	IT

CIVIL, ELECTRICAL, MECHANICAL, STRUCTURAL AND SANITARY ENGINEERING SERVICES

L. E. WOOTEN AND COMPANY
CONSULTING ENGINEERS
RALEIGH, N. C.

October 7, 1959

COPY

Department of the Navy
Resident Officer in Charge
Bureau of Yards and Docks Contracts
Marine Corps Base
Camp Lejeune, North Carolina

RE: 4E-51:JFM:er, NBy-24218, Rehabilitation of Raw Water Supply, Marine Corps Base, Camp Lejeune, North Carolina

Gentlemen:

We return herewith Westinghouse Electric Corporation's drawing of controller wiring diagram transmitted to us by your letter dated 28 September 1959 subject as above. The two starters indicated are approved without objection, however the contractor should be notified that proper contacts should be included to afford remote control from the push-button station to be located in the water plant.

Very truly yours,

L. E. WOOTEN AND COMPANY

By_____
L. E. Wooten

RFR/apb
Enclosure

OICC-ROICC
MARINE CORPS BASE, CAMP LEJEUNE, N. C.

No. 270

Date 28 Sept 59

From T. A. Loving and Co.

Subject NBy-24218 - Westinghouse Electric Corp. dwgs

-CODE-

1. Action
2. Information
3. Prepare reply for OICC/ROICC
4. Prepare reply for MCB
5. Prepare estimate
6. Investigate
7. Retain copy
8. File
9. _____

ROUTING	CODE	SEQUENCE	INITIAL	DATE
CODE 4E-10				
CODE 4E-10A				
CODE 4E-15				
CODE 4E-16				
CODE 4E-20				
CODE 4E-40				
CODE 4E-50				
CODE 4E-51	1			
CODE 4E-100				
CODE 4E-200				
CODE 4E-300				
CODE 4E-400				
CODE 4E-500				
CODE 4E-510				
CODE 4E-520				
CONTR FILES				

REMARKS:

To Wooten

*(Routing slip will be returned to Central Office with correspondence attached unless otherwise indicated)

T. A. LOVING AND COMPANY

GENERAL CONTRACTORS

GOLDSBORO, N. C.

September 25, 1959

Resident Officer in Charge of Construction
Building 1005
U. S. Marine Corps Base
Camp Lejeune, North Carolina

Re NBY-24218 Rehabilitation of Raw Water
Supply, Camp Lejeune, N. C.

Gentlemen:

We are enclosing five (5) copies each of drawings submited by Westinghouse Electric Corp. for your approval. Also enclosed is a copy of their cover letter explaining the drawings.

Please review these drawings at your earliest convenience and return to us.

Very truly yours

T. A. LOVING AND COMPANY

By: Robert S. Hults
Office Mgr.-Utility Dept.

4 - Kr
1 - DP.WO
1 - Wooten
1 - 48-520
1 - 48-51
2 - Rell
B/

DEPARTMENT OF THE NAVY
RESIDENT OFFICER IN CHARGE
BUREAU OF YARDS AND DOCKS CONTRACTS

IN REPLY REFER TO:

Marine Corps Base, Camp Lejeune, North Carolina

28 September 1959

L. E. Wooten and Company
306 South Dawson Street
Raleigh, North Carolina

Re: Contract NBy-24218, Rehabilitation of Raw Water Supply, Marine Corps Base, Camp Lejeune, North Carolina

Gentlemen:

The below listed shop drawings/information on materials proposed for use on the referenced contract are forwarded for your review and comments. It is requested that they be reviewed and returned to this office within seven days from date of this letter.

Dwg No.	No. of Copies	Description
None	1	Westinghouse Electric Corp. dwg of controller wiring diagram on T. A. Loving's shop orders 19-X-27 and 19-X-28 with Westinghouse Electric Corp. letter of transmittal

Very truly yours,

D. M. KLEIN
LTJG CEC USN
Assistant Resident Officer
in Charge of Construction

Westinghouse

ELECTRIC CORPORATION

414 FAYETTEVILLE ST.
P.O. BOX 2146, RALEIGH, N.C.

September 25, 1959

Mr. Frank Shannon
T. A. Loving Company
Utilities Department
P. O. Box 738
Goldsboro, North Carolina

Subject: Your Purchase Order 892
Raw Water Supply
Camp Lejeune
NBY 24218
Our CH-32611-L1

Dear Mr. Shannon:

I am attaching six copies each of drawings covering Items 1 and 1A, our Shop Orders 19-X-27 and 28. The two sets of drawings are identical, but for manufacturing purposes one starter was entered on Shop Order 19-X-28 and two were entered on Shop Order 19-X-27.

Please review these drawings and if they meet with your approval, mark them approved and return to me as soon as possible. As soon as the approved drawings are returned to the factory we will be able to advise you a shipping date.

We shall appreciate your cooperation very much.

Very truly yours,

Larry G. Deal
Sales Assistant

LGD:jq
Attachments.
cc: Wilmington Electrical Supply Company
P. O. Box 906
Wilmington, North Carolina
Attention: Mr. H. Ross Troth, Manager

DRAWING TRANSMITTAL

Westinghouse

ELECTRIC CORPORATION

9/17/59
(DATE)

PROJECT NO.	WESTINGHOUSE O.O. NO.	CUSTOMER REQUISITION NO.	CUSTOMER ORDER NO.
	CH-32611-L1		892

CUSTOMER
WILMINGTON ELECTRICAL SUPPLY CO., INC.
1110-1112 CHESTNUT ST.
WILMINGTON, N.C.

ULTIMATE USER & LOCATION OR STATION
T. A. LOVING & CO.
CAMP LEJEUNE, N.C.

PRINTS ARE:

[X] FOR APPROVAL — NOTE: Design changes or delay in approval will extend shipment promise. Maintenance of the scheduled shipping date depends on receipt of approval by Westinghouse not later than 10/1/59

[ ] FOR CONSTRUCTION OR INSTALLATION [ ] FOR REFERENCE [ ]

ITEM 1 S.O. 19-X-27

QUANTITY 2

APPARATUS CLASS 11-600 SIZE 4, REDUCED VOLTAGE, AUTO TRANSFORMER STARTERS, OPEN TRANSITION, NEMA I ENCLOSURE

11-600-NS-47	432-C-387	SUB	DIAGRAM
11-600-NS-47	225-A-519	SUB	OUTLINE

7 PRINTS TO RALEIGH, NC - L. G. NEAL
1 PRINT TO CHARLOTTE, NC. - H. P. HAMMETT

COPIES TO:
CC BUFFALO CONTROL O.S. - F. BUTLER
CC BUFFALO CONTROL VAULT, FILE IN SO FOLDER 19-X-27

SEND APPROVAL OR INQUIRIES TO WESTINGHOUSE C/O:
DISTRICT ORDER CORRESPONDENT STREET ADDRESS CITY ZONE STATE

APPARATUS CLASS (11-600) AUTO-TRANSFORMER TYPE REDUCED VOLTAGE STARTER (WIRING DETAILS)

DWG. 432C387 SUB. 1 FINISH CHART

SYM.	ITEM	DESCRIPTION – MATERIAL – REF. DWG. DIMENSIONS IN INCHES	STYLE NO.	REQ	DWG SYM	TOOL RECORD SPACE
	01	CONTROL CONN. 150 IN OF 7-.024 CABLE 12277-15 (RED)		1	NONE	
	02	START AND TRANS. CONN. 350 IN. 7-.0486 CABLE 12277-3 (BLK)		1	Φ	
	03	START AND TRANS. CONN. 350 IN. 33-.0177 CABLE 12277-5 (BLK)		1	Φ	
	04	TERMINAL BLOCKS (25A)	1180942	3		
	05	END CLIPS	1490283	2		
	06	FLEX CONN. 75 IN OF 41-.010 CABLE #12277-15 (BLK)		1	F	

GRP	DESCRIPTION	ITEMS OF THIS DWG	REQ
01	FOR SIZE 3 STARTER	01-02-04-05-06	1
02	FOR SIZE 4 STARTER	01-03-04-05-06	1

ELEMENTARY CONTROLLER DIAGRAM

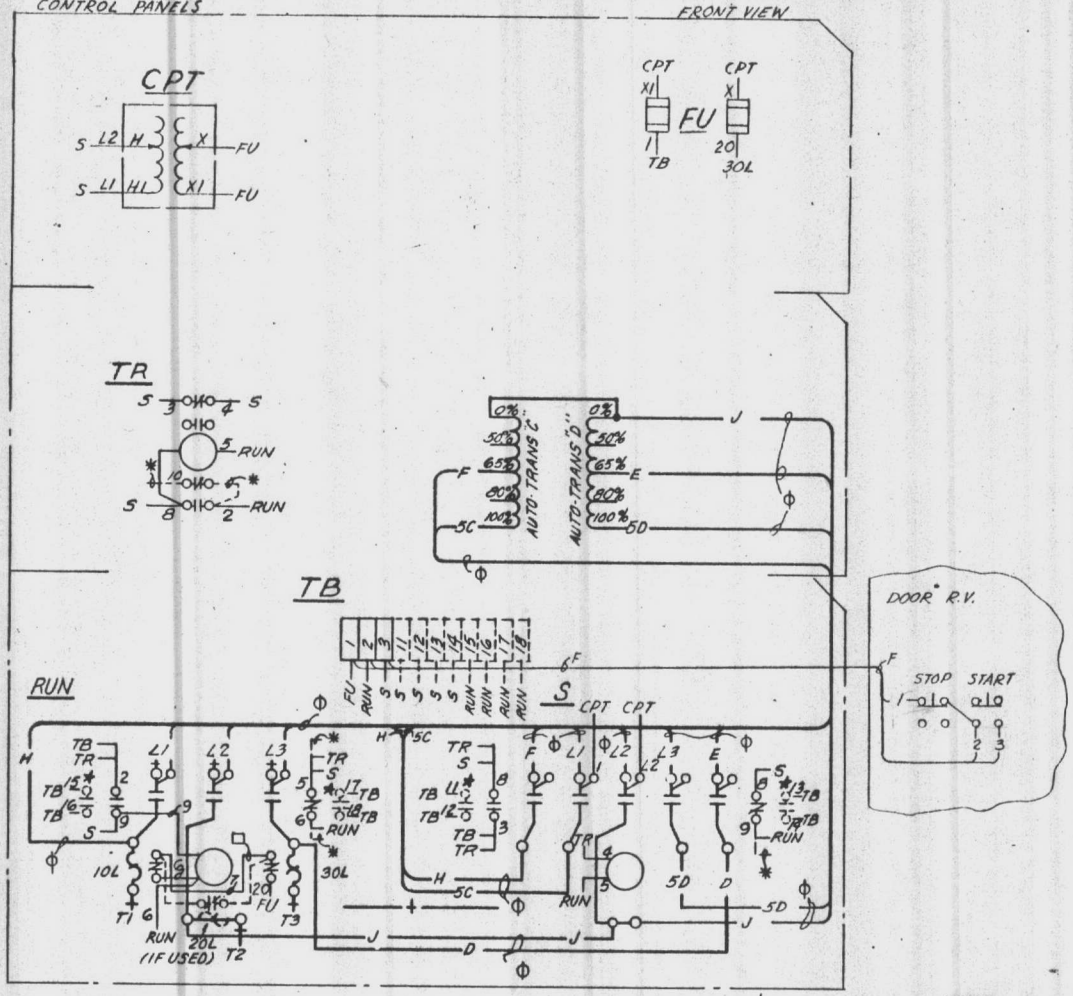

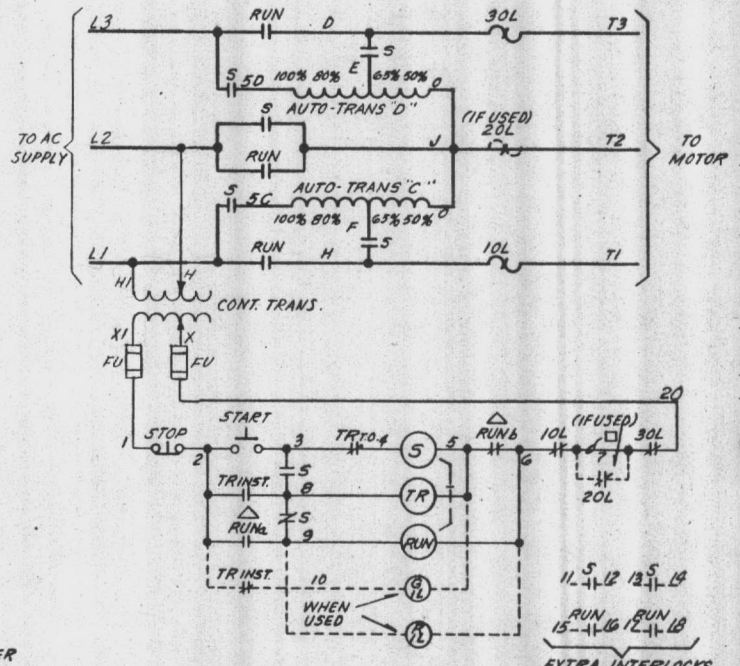

NOTES

1. WHEN THIRD OL IS USED OMIT LEAD 7 AND CONNECT PER DOTTED CONN.
2. OMIT DASHED WIRING WHEN IND. LIGHTS ARE NOT USED.
3. RUN 6 MUST CLOSE BEFORE RUN 6 OPENS
4. EXTRA INTERLOCKS MAY BE N.O. OR N.C.

INDICATING LIGHTS (WHEN USED)

IND. LIGHT LEGEND (NORMAL OPERATION)

GREEN ON – POWER AVAILABLE
GREEN & RED OFF – MOTOR ON TRANSFORMER (FOR TIME SET ON TR)
RED ON – MOTOR ON FULL VOLTAGE

COPY OF 425C832

WIRING LEGEND.

DEVICE DESIGNATION
WIRE MARKING
LEAD DESTINATION
WIRE SIZE
CUSTOMERS CONN.

TOOL REF. DWG.
ENG. REF. DWG. 211A278-SIZE 3, 211A279-SIZE 4

WESTINGHOUSE ELECTRIC CORPORATION

TITLE CONTROLLER WIRING DIAGRAM
CLASS (11-600) AUTO-TRANSFORMER TYPE REDUCED VOLTAGE STARTER

DFTM. P. FRAGALE 9-11-59 APPD. 9/14/59
CHKD. APPD. APPD. 9/14/59

DIV & PLANT LOCATION GEN. PUR. CONTROL

BUFFALO DIVISIONS, BUFFALO, N.Y., U.S.A.

432C387

SHEET #1 OF 8. OF HL MUST NOT EXTEND BELOW THIS SPACE. SEE BOOK IF MORE SHEETS ARE NEEDED.

S.O. 19X27 1 CHANGE

WPC INK TRACING CLOTH

[illegible] TRANSMITTAL

Westinghouse
ELECTRIC CORPORATION

9/17/59
(DATE)

PROJECT NO.	WESTINGHOUSE O.O. NO.	CUSTOMER REQUISITION NO.	CUSTOMER ORDER NO.
	CH-32611-L1		892

CUSTOMER
WILMINGTON ELECTRICAL SUPPLY CO., INC.
1110-1112 CHESTNUT ST.
WILMINGTON, N.C.

ULTIMATE USER & LOCATION OR STATION
T. A. LOVING & CO.
CAMP LEJEUNE, N.C.

PRINTS ARE:

[X] FOR APPROVAL

NOTE: Design changes or delay in approval will extend shipment promise. Maintenance of the scheduled shipping date depends on receipt of approval by Westinghouse not later than 10/1/59

[ ] FOR CONSTRUCTION OR INSTALLATION

[ ] FOR REFERENCE

[ ]

ITEM 1A S.O. 19-X-28

QUANTITY 1

APPARATUS CLASS 11-600-SIZE 4, REDUCED VOLTAGE, AUTO TRANSFORMER STARTER, OPEN TRANSITION, NEMA I, ENCLOSURE

CL-11-600NS47	432-C-387	SUB	DIAGRAM
"	225-A-519	SUB	OUTLINE

7 PRINTS TO RALEIGH, N.C. - L. G. DEAL
1 PRINT TO CHARLOTTE, N.C. - H. P. HAMMETT

COPIES TO

CC BUFFALO CONTROL O.S. - F. BUTLER
CC BUFFALO CONTROL VAULT, FILE IN SO FOLDER 19-X-28

SEND APPROVAL OR INQUIRIES TO WESTINGHOUSE %:
DISTRICT ORDER CORRESPONDENT STREET ADDRESS CITY ZONE STATE

APPARATUS CLASS (11-600) AUTO-TRANSFORMER TYPE REDUCED VOLTAGE STARTER (WIRING DETAILS)

DWG. 432C387 SUB. 1 FINISH CHART

SYM.	ITEM	DESCRIPTION – MATERIAL – REF. DWG. DIMENSIONS IN INCHES	STYLE NO.	REQ	DWG SYM	TOOL RECORD SPACE
	01	CONTROL CONN. 150 IN OF 7-.024 CABLE 12277-15 (RED)		1	NONE	
	02	START AND TRANS. CONN. 350 IN. 7-.0486 CABLE 12277-3 (BLK)		1	Φ	
	03	START AND TRANS. CONN. 350 IN. 33-.0117 CABLE 12277-15 (BLK)		1	Φ	
	04	TERMINAL BLOCKS (25A)	1180942	3		
	05	END CLIPS	1490283	2		
	06	FLEX CONN. 25 IN OF 41-.010 CABLE #12277-15 (BLK)		1		F

GRP	DESCRIPTION	ITEMS OF THIS DWG	REQ.
01	FOR SIZE 3 STARTER	01-02-04-05-06	1
02	FOR SIZE 4 STARTER	01-03-04-05-06	1

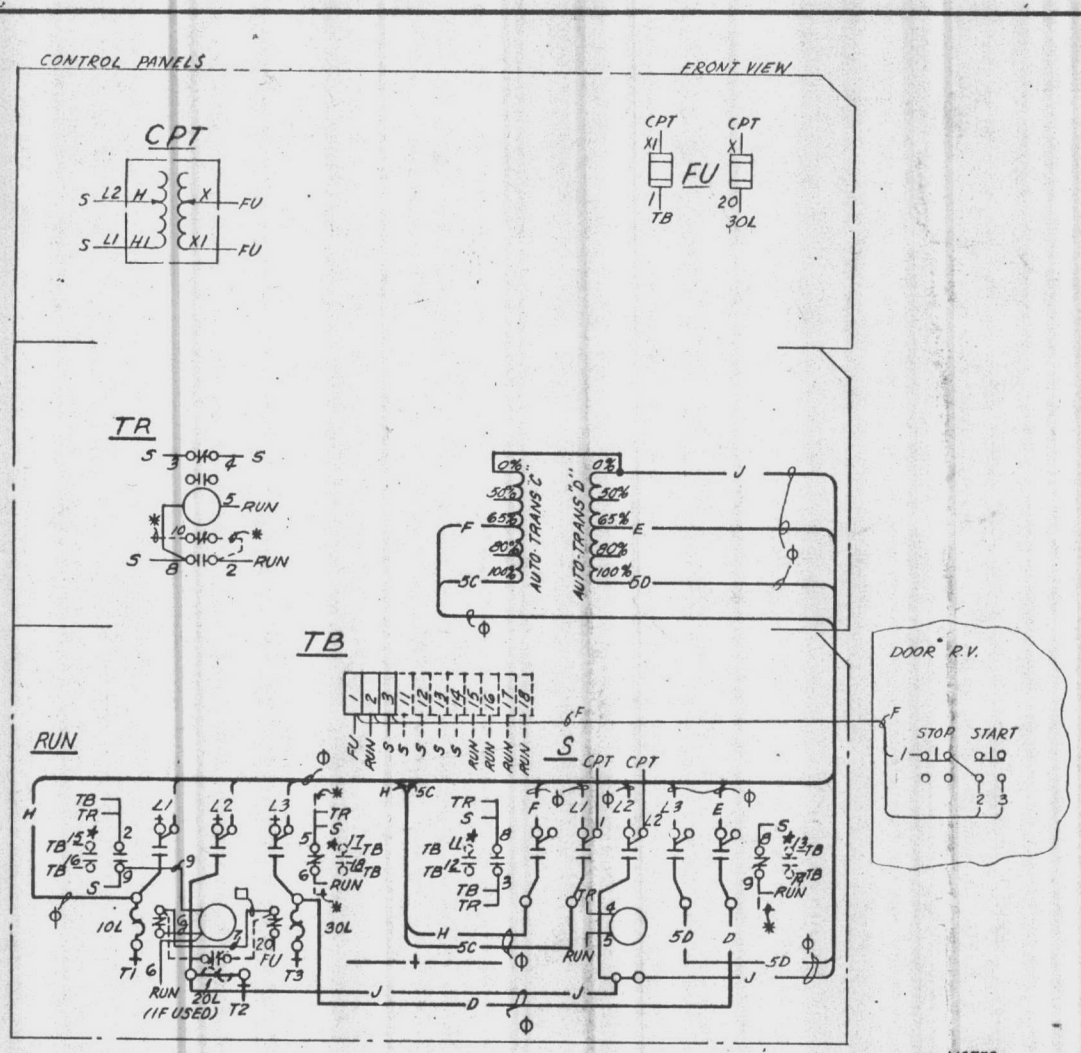

NOTES

1. WHEN THIRD OL IS USED OMIT LEAD 7 AND CONNECT PER DOTTED CONN.
2. OMIT DASHED WIRING WHEN IND. LIGHTS ARE NOT USED.
3. RUN a MUST CLOSE BEFORE RUN b OPENS
4. EXTRA INTERLOCKS MAY BE N.O. OR N.C.

IND. LIGHT LEGEND (NORMAL OPERATION)

GREEN ON – POWER AVAILABLE

GREEN & RED OFF – MOTOR ON TRANSFORMER (FOR TIME SET ON TR)

RED ON – MOTOR ON FULL VOLTAGE

ELEMENTARY CONTROLLER DIAGRAM

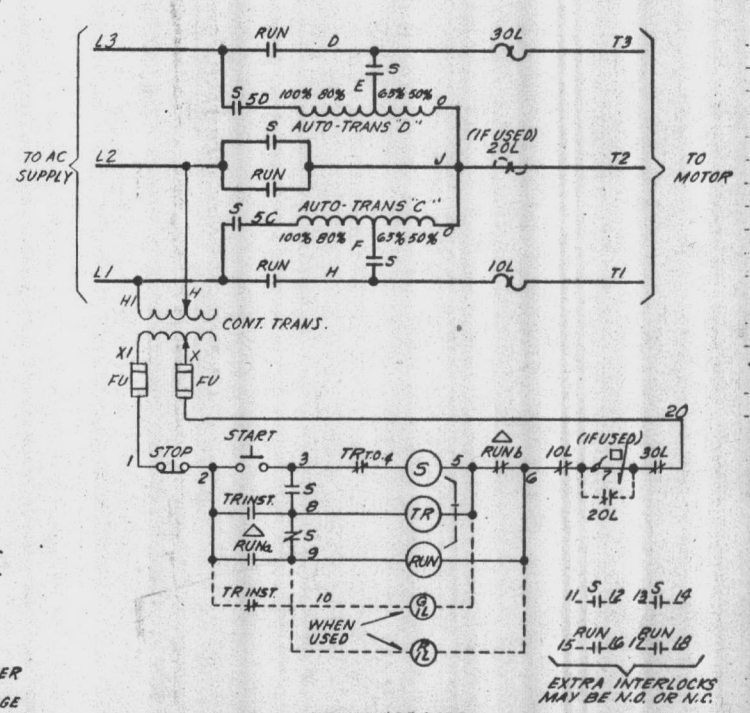

COPY OF 425C832

WIRING LEGEND

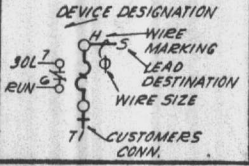

TOOL REF. DWG.

ENG. REF. DWG. 211A278-SIZE 3, 211A279-SIZE 4

WESTINGHOUSE ELECTRIC CORPORATION

TITLE CONTROLLER WIRING DIAGRAM

CLASS (11-600) AUTO-TRANSFORMER TYPE REDUCED VOLTAGE STARTER

DFT'D. P. FRAGALE 9-11-59 APPD. 9/14/59

CHKD. APPD. 9/14/59

DIV & PLANT LOCATION GEN. PUR. CONTROL

BUFFALO DIVISIONS, BUFFALO, N.Y., U.S.A.

432C387

S.O. 19X27 1 CHANGE

WPC INK TRACING CLOTH

SHEET #1 OF 8. OF 8. MUST NOT EXTEND BELOW THIS SPACE. SEE STD. BOOK IF MORE SHEETS ARE NEEDED.