AREA CODE 704 333-0774

POWER & PROCESS EQUIPMENT

B & M

BROWN & MORRISON

W. C. "BILL" MORRISON
HAROLD K. COUCH
DONALD H. JONES
ED B. MONTAGUE

1900 EAST 7TH STREET
P. O. BOX 4307
CHARLOTTE, N. C. 28204

April 2, 1968

U. S. Marine Corps
Camp Lejeune
North Carolina

Attention Mr. Melvin S. Witherow, Mechanic
Water Treatment Plant

Gentlemen:

Subject: Cochrane Division-Crane Company
Parts for S. O. 1172-64
Rifle Range Water Softener

We believe we now have a quotation on the parts which you actually are interested in. We regret that we sent you a quotation on the complete Eagle timer rather than the individual microswitches and clips.

We are pleased to quote as follows:

1 - Microswitch for 90 minute Eagle timer, per Drawing D-123942-2 ---------- $18.00 per switch

1 - Key for timer ---------- $ 1.00 each

Shipment can be made within approximately two to three weeks. Terms are net thirty days. All prices are f.o.b. shipping point. Note: Our minimum charge on all parts orders is $20.00.

We hope that you will find this information of value and that we may have the pleasure of handling your order made out to Cochrane Division, in care of Brown & Morrison as representatives.

Yours very truly,

BROWN & MORRISON, District Representatives
For: COCHRANE DIVISION - Crane Company

E. B. Montague

E. B. Montague

EBM:jb
Sent in duplicate

BROWN & MORRISON, 1900 E. [illegible] St. P. O. Box 4307 Charlotte, N. C. 28204 Area Code 704 Phone 333-0774

April 2, 1968

U. S. Marine Corps
Camp Lejeune
North Carolina

Attention Mr. Melvin S. Witherow, Mechanic
Water Treatment Plant

Gentlemen:

Subject: Cochrane Division-Crane Company
Parts for S. O. 1172-64
Rifle Range Water Softener

We believe we now have a quotation on the parts which you actually are interested in. We regret that we sent you a quotation on the complete Eagle timer rather than the individual microswitches and clips.

We are pleased to quote as follows:

1 -	Microswitch for 90 minute Eagle timer, per Drawing D-123942-2	$18.00 per switch
1 -	Key for timer	$ 1.00 each

Shipment can be made within approximately two to three weeks. Terms are net thirty days. All prices are f.o.b. shipping point. Note: Our minimum charge on all parts orders is $20.00.

We hope that you will find this information of value and that we may have the pleasure of handling your order made out to Cochrane Division, in care of Brown & Morrison as representatives.

Yours very truly,

BROWN & MORRISON, District Representatives
For: COCHRANE DIVISION - Crane Company

E. B. Montague

E. B. Montague

EBM:jb
Sent in duplicate

4

18.00

5

90.00

10.00

100.00

AREA CODE 704 333-0774

POWER & PROCESS EQUIPMENT

B & M

BROWN & MORRISON

W. C. "BILL" MORRISON
HAROLD K. COUCH
DONALD H. JONES
ED B. MONTAGUE

1900 EAST 7TH STREET
P. O. BOX 4307
CHARLOTTE, N. C. 28204

March 18, 1968

U. S. Marine Corps
Camp LeJeune
North Carolina

Attention Melvin S. Witherow
Water Plant Mechanic

Gentlemen:

Subject: Water Treatment Plant
Rifle Range
S. O. 1172-64
Your Letter of February 20, 1968

We are pleased to furnish the following information in accordance with your recent inquiry:

One (1) 90 minute Eagle Timer, 2089-5031 per dwg D123942-2

Price----------$95.00 each

Terms are net 30 days. Price is f. o. b. factory. Shipment, four weeks.

We appreciate this opportunity to quote and look forward to receiving your order made out to Cochrane Division-Crane Company in care of Brown & Morrison as representatives.

Yours very truly,

BROWN & MORRISON, District Representatives
FOR: COCHRANE DIVISION-Crane Company

E. B. Montague

(bfm)
Sent in duplicate

BROWN & MORRISON, 1900 E. 7th St., P. O. Box 4307, Charlotte, N. C. 28204 Area Code 704 Phone 333-0774

March 18, 1968

U. S. Marine Corps
Camp LeJeune
North Carolina

Attention Melvin S. Witherow
Water Plant Mechanic

Gentlemen:

Subject: Water Treatment Plant
Rifle Range
S. O. 1172-64
Your Letter of February 20, 1968

We are pleased to furnish the following information in accordance with your recent inquiry:

One (1) 90 minute Eagle Timer, 2089-5031 per dwg D123942-2

Price----------$95.00 each

Terms are net 30 days. Price is f. o. b. factory. Shipment, four weeks.

We appreciate this opportunity to quote and look forward to receiving your order made out to Cochrane Division-Crane Company in care of Brown & Morrison as representatives.

Yours very truly,

BROWN & MORRISON, District Representatives
FOR: COCHRANE DIVISION-Crane Company

E. B. Montague

(bfm)
Sent in duplicate

TABLE OF CONTENTS

SECTION 6 VENDORS INSTRUCTIONS

Barton Instrument Corporation
Black, Sivalls and Bryson Inc.
Eagle Signal Company
Neptune Meter Company

Cochrane Division
Crane CO.
King Of Prussia, Pa.

Sub: Cochrane Filters, Automatic Controls

Gentlement:

Please send at no extra cost to the Government a part list for (90 min. Timer-89-05068) on Water Filter Controls, Rifle Range Water Plant, Camp Lejeune,N.C. S.O.1172-64. We need to order a housing frame and shaft that the 90 min. Timer rides on.

Yours very truly,

Melvin S. Witherow, Mechanic
Water Treatment, Bldg. 20
Camp Lejeune,N.C.

D-123942-2

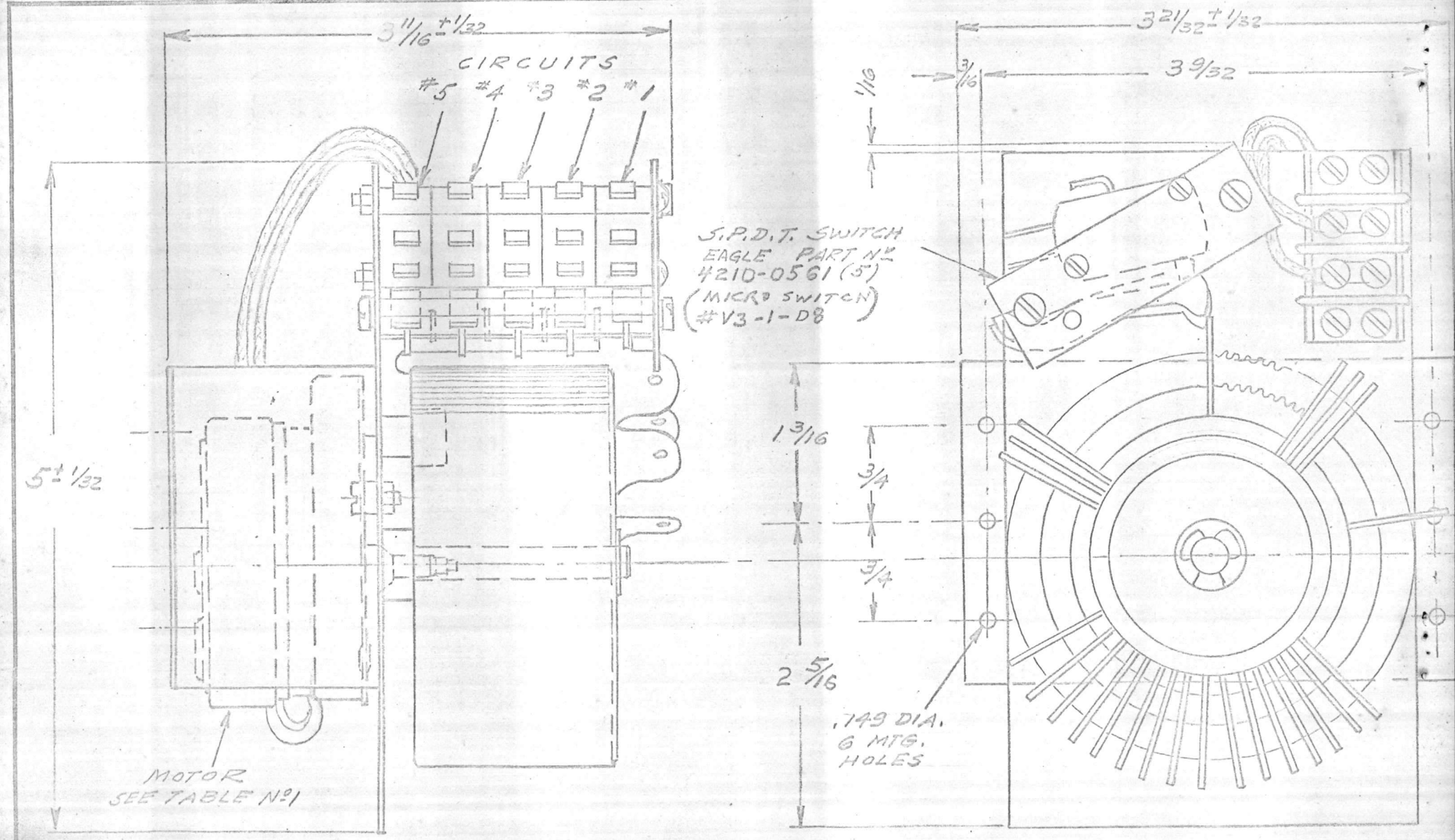

ADJUSTABLE

D-123942-2

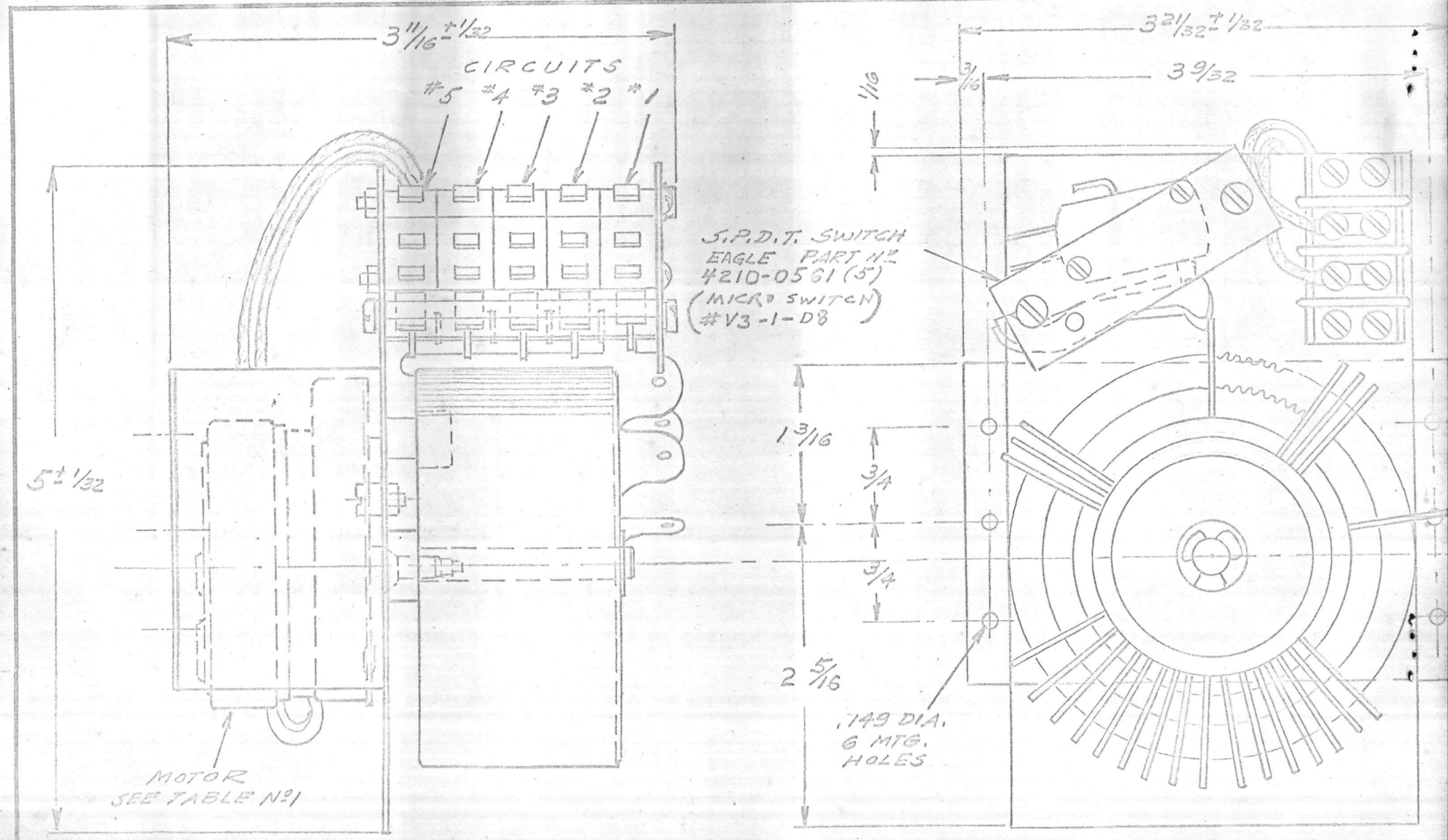
3 11/16 ± 1/32
CIRCUITS
#5 #4 #3 #2 #1
5 ± 1/32
MOTOR
SEE TABLE Nº1
S.P.D.T. SWITCH
EAGLE PART Nº
4210-0561 (5)
(MICRO SWITCH
#V3-1-D8)
1 3/16
3/4
3/4
2 5/16
.149 DIA.
6 MTG.
HOLES
3 21/32 ± 1/32
3 9/32
1/16
3/16

WORK ORDER NUMBER	QUANTITY
345379 0	1

PRODUCT NUMBER: 61B2N 600 800 138

THE SERIAL NUMBER OF THIS ITEM CONSISTS OF THE LAST TWO DIGITS OF THE CURRENT YEAR PLUS THE MILLER WORK ORDER NUMBER.

PARTS LIST

						PART NAME
886	FIRST	NSS	ORD 7	9583	400	
112	CP50A	N0600				CAP
112	FW011	600				FOLLOWER
112	FW061	600				FOLLOWER
112	HD50B	N0600	138			HEAD
112	PN011	600				PISTON
112	PR022	N0600	1475	138		PISTON ROD
112	TU002	600	975			TUBE
058	TR050	1425	100	100		TIE ROD
110	FL61B	600	138			FLNG PLATE
007	NU011	FC050	20			NUT
007	SC001	AA025	28	63		SCREW
008	RG013	100				O-RING
050	BU024	138				BUSHING
051	NB001	138				INNER BUSH
051	PG001	138				PRSR RING
051	RS005	138				ROD SEAL
051	WP001	138				WIPER
051	WS004	138				WAVE SPRNG
052	PS001	600				PSTN SEAL
110	ES006	600				END SEAL

6" Filter Valves

RR85 Filter Valve Controls

WHEN ORDERING REPLACEMENT PARTS, ALWAYS MAKE REFERENCE TO THE MILLER WORK ORDER/SERIAL NUMBER.

Miller

MILLER FLUID POWER CORPORATION
Subsidiary of Flick-Reedy Corporation
7N015 YORK RD., BENSENVILLE, ILLINOIS 60106
DUNS 00-507-1717
Area Code 312 — 766-3400 • Call Collect • Station to Station

FR®

AIR & HYD. CYLS. • PRESSES • FILTERS • REGULATORS • LUBRICATORS
BOOSTERS • TANKS • PUMPS • AIR VALVES • ACCUMULATORS • HYD. VALVES
AIR DRYERS • TRU-SEAL • AIR MOTORS • POWER UNITS

CRANE CO.

INDIAN ORCHARD, MASS. 01051

PACKING LIST

SALES ORDER

INVOICE DATE	INVOICE NO.	DATE SHIP'D.

CUST. ORDER NO.	CUST. REQ'N NO.	BRANCH ORD. NO.	ORDER DATE	PROMISE DATE	TYPE	CUST. CODE	ORIG	DEST	BR. & SLSM.	QUOTATION NO.	C. V. ORDER NO.
PO 44234		0906	30CT.73				3732		1170	Q	105495433

COPY TO. J.P. HANSARD, CRANE ATLANTA

VF 18942

SHIP TO

U.S. MARINE CORP.
FREIGHT TRAFFIC BRANCH
BUILDING 1011
CAMP LEJEUNE, N.C. 28542

MARK PKGS
P.O. NO. 44234
TAG-- P.O. NO. M67001-74-M-5027

SOLD TO (SAME AS SHIP TO UNLESS SHOWN)

COCHRANE DIVISION - CRANE CO.
P.O. BOX 191
KING OF PRUSSIA, PA. 19406

DELY. REQD. A.S.A.P.

SHIP VIA

BEST WAY

F.O.B.

I.O., MASS.

INSPECTION

SHIPPING MANIFEST		
	BOXES	
	PALLETS	
	CRATES	
	SKIDS	
	BDLS.	
	LOOSE	
TOTAL WEIGHT ▶		
SHIPPED VIA	TRANS. CHARGES	

REORDER BY PART NUMBER

ITEM NO.	QUAN. ORD'D.	DESCRIPTION
		PARTS FOR 6 INCH LIST 59-1/2 CYL. OPERATED GATE VALVE. REF. PA-127432
01	1	6 INCH MILLER CYLINDER P/N 127-435-001 17 R289589
		NO SPECIAL Q.C. ORDER INSTRUCTIONS

TAX DESCRIPTION	TERMS:	TAXABLE AMOUNT ▶
	2% 15TH PROX. NET 30TH PROX DAYS	TAX AMOUNT ▶
TRANSPORTATION DESCRIPTION	NO DISCOUNT ON FREIGHT OR TAXES	TRANSPORTATION CHARGES ▶

SPECIAL INSTRUCTIONS

Miller Cyl

127435001

LAB

CHECKED BOX APPLIES	[X] ORDER FOR SUPPLIES OR SERVICES	[ ] REQUEST FOR QUOTATIONS NO. RETURN COPY(IES) OF THIS QUOTE BY (THIS IS NOT AN ORDER. See DD Form 1155r)	PAGE 1 OF 2

1. CONTRACT/PURCH ORDER NO.	2. DELIVERY ORDER NO.	3. DATE OF ORDER	4. REQUISITION/PURCH REQUEST NO.	5. CERTIFIED FOR NATIONAL DEFENSE UNDER DMS REG 1 DO
M67001-68-M-1959		30 Nov 1967	M93058-7304-6507	

6. ISSUED BY: CODE
Purchasing & Contracting Branch
BMB, Bldg 1211, P.O. Box 15, MCB.,
Camp Lejeune, N. Carolina 28542

7. ADMINISTERED BY: (If other than 6) CODE

8. DELIVERY FOB
[ ] DESTINATION
PRIORITY: 19
[X] OTHER
(See Schedule if other)

9. CONTRACTOR/QUOTER CODE FACILITY CODE

NAME AND ADDRESS
Cochrane Div. Crane Co.
c/o Brown and Morrison
1900 E. Seventh St.
Charlotte, N C. 28202
HS/ebb

10. DELIVER TO FOB POINT BY: 22 Dec 1967

11. CHECK IF SMALL BUSINESS [X]

12. DISCOUNT TERMS Net 30 day

13. MAIL INVOICES TO: (In sextuplicate)
Same as Block 14

14. SHIP TO: CODE
Freight Traffic Branch
Bldg 1011, Camp Lejeune, N.Carolina 28542
M67001- 68-M-1959

15. PAYMENT WILL BE MADE BY: CODE
Base Disbursing Officer
MCB, Camp Lejeune, North Carolina 28542

MARK ALL PACKAGES AND PAPERS WITH CONTRACT OR ORDER NUMBER

16. TYPE OF ORDER

DELIVERY		This delivery order is subject to instructions contained on this side of form only and is issued on another Government agency or in accordance with and subject to terms and conditions of above numbered contract.
PURCHASE	X	Reference your telequote of 29 Nov 67, furnish the following on terms specified herein, including; for U. S. purchases, General Provisions of Purchase Order on DD Form 1155r (Except CLAUSE NO. 13 APPLIES ONLY IF THIS BOX [ ] IS CHECKED, and NO. 15 IF THIS BOX [ ] IS CHECKED); special provisions ; and delivery as indicated. This purchase is negotiated under authority of 10 USC 2304(a)(3) or as specified in the schedule if within the U. S., its possessions or Puerto Rico; if otherwise, under 2304(a)(6).

[ ] If checked, Additional General Provisions apply; Supplier shall sign "Acceptance" on DD Form 1155r and return copies.

17. ACCOUNTING AND APPROPRIATION DATA – ACCOUNTING CLASSIFICATION (REV. 7-65)

ITEM NO.	APPROPRIATION SYMBOL AND SUBHEAD	OBJECT CLASS	BUREAU CONT. NO.	SUB-ALLOT.	AUTH'N ACCT'G ACT'Y	TRANS. TYPE	PROPERTY ACCT'G ACT'Y	COUNTRY	COST CODE	AMOUNT
1	1781106.2710		13002		67001	2D	8CL50QP01500			$168.00 plus tran

18. ITEM NO.	19. SCHEDULE OF SUPPLIES/SERVICES	20. QUANTITY ORDERED/ ACCEPTED*	21. UNIT	22. UNIT PRICE	23. AMOUNT
	FAILURE TO COMPLY WITH SHIPPING INSTRUCTIONS MAY RESULT IN REJECTION OF MATERIAL. NO PARTIAL SHIPMENTS WILL BE ACCEPTED UNLESS SPECIFICALLY AUTHORIZED HEREIN.				
	PART for: 4" Hydromatic valve, Ser No. SO 1172-64, valve cat. No. 13525464, Automatic Cat. No. F118331 as follows:				
1	Diaphragm for inner valve assy. for top of valve, to be P/N 132760	12	ea	14.00	168.00

*If quantity accepted by the Government is same as quantity ordered, indicate by √ mark. If different, enter actual quantity accepted below quantity ordered and encircle.

24. UNITED STATES OF AMERICA
BY: ROGER L. BATTS
Roger L. Batts
CONTRACTING/ORDERING OFFICER

25. TOTAL $168.00

29. DIFFERENCES

26. QUANTITY IN COLUMN 20 HAS BEEN:
[ ] RECEIVED [ ] INSPECTED [ ] ACCEPTED, AND CONFORMS TO THE CONTRACT EXCEPT AS NOTED

Date (Signature of authorized Government representative)

27. SHIP. NO.

[ ] FINAL [ ] PARTIAL

28. D.O. VOUCHER NO.

30. INITIALS

31. PAYMENT
[ ] COMPLETE [ ] PARTIAL [ ] FINAL

32. PAID BY
67001-
SYM #5190
MCB CLNC

33. AMOUNT VERIFIED CORRECT FOR

34. CHECK NUMBER

35. BILL OF LADING NO.

36. I CERTIFY that this account is correct and proper for payment

(Signature and title of Certifying Officer)

37. RECEIVED AT	38. RECEIVED BY	39. DATE RECEIVED	40. TOTAL CONTAINERS	41. S/R ACCOUNT NUMBER	42. S/R VOUCHER NO.

THIS PARAGRAPH APPLIES ONLY TO QUOTATIONS [illegible]TTED: Supplies are of domestic origin unless otherwise indicated by quoter. T[illegible]ernment reserves the right to consider quotations or m[illegible]ifications thereof rece[illegible] after the date indicated should such action be in the interest of the Government. This is a request for information and quotations furnished are not offers. When quoting, complete blocks 11, 12, 22, 23, 25. If you are unable to quote, please advise. This request does not commit the Government to pay any cost incurred in preparation or the submission of this quotation or to procure or contract for supplies or services.

GENERAL PROVISIONS

1. INSPECTION AND ACCEPTANCE - Inspection and acceptance will be at destination, unless otherwise provided. Until delivery and acceptance, and after any rejections, risk of loss will be on the contractor unless loss results from negligence of the Government.

2. VARIATION IN QUANTITY - No variation in the quantity of any item called for by this contract will be accepted unless such variation has been caused by conditions of loading, shipping, or packing, or allowances in manufacturing processes, and then only to the extent, if any, specified elsewhere in this contract.

3. PAYMENTS - Invoices shall be submitted in quadruplicate *(one copy shall be marked "Original")* unless otherwise specified, and shall contain the following information: Contract or Order number, Item number, contract description of supplies or services, sizes, quantities, unit prices and extended totals. Bill of lading number and weight of shipment will be shown for shipments on Government Bills of Lading. Unless otherwise specified, payment will be made on partial deliveries accepted by the Government when the amount due on such deliveries so warrants.

4. DISCOUNTS - Discount time will be computed from date of delivery at place of acceptance or from receipt of correct invoice at the office specified by the Government, whichever is later. Payment is made, for discount purposes, when check is mailed.

5. DISPUTES - (a) Except as otherwise provided in this contract, any dispute concerning a question of fact arising under this contract which is not disposed of by agreement shall be decided by the Contracting Officer, who shall mail or otherwise furnish a copy thereof to the Contractor. This decision shall be final and conclusive unless, within 30 days from the date of receipt of such copy, the Contractor mails or otherwise furnishes to the Contracting Officer a written appeal addressed to the Secretary. The decision of the Secretary or his duly authorized representative for the determination of such appeals shall be final and conclusive unless determined by a court of competent jurisdiction to have been fraudulent, or capricious, or arbitrary, or so grossly erroneous as necessarily to imply bad faith, or not supported by substantial evidence. The Contractor shall be afforded an opportunity to be heard and to offer evidence in support of his appeal. Pending final decision of a dispute hereunder, the Contractor shall proceed diligently with the performance of the contract and in accordance with the Contracting Officer's decision. (b) This "Disputes" clause does not preclude consideration of law questions in connection with decisions provided for in (a) above, provided, that nothing in this contract shall be construed as making final the decision of any administrative official, representative, or board on a question of law.

6. FOREIGN SUPPLIES - This contract is subject to the Buy American Act *(41 U.S.C. 10 a-d)* as implemented by Executive Order 10582 of December 17, 1954, and any restrictions in appropriation acts on the procurement of foreign supplies.

7. CONVICT LABOR - The Contractor agrees not to employ for work under this contract any person undergoing sentence of imprisonment at hard labor.

8. OFFICIALS NOT TO BENEFIT - No member of or Delegate to Congress or resident commissioner, shall be admitted to any share or part of this contract, or to any benefit that may arise therefrom, but this provision shall not be construed to extend to this contract if made with a corporation for its general benefit.

9. COVENANT AGAINST CONTINGENT FEES - The Contractor warrants that no person or selling agency has been employed or retained to solicit or secure this contract upon an agreement or understanding for a commission, percentage, brokerage, or contingent fee, excepting bona fide employees or bona fide established commercial or selling agencies maintained by the Contractor for the purpose of securing business. For breach or violation of this warranty the Government shall have the right to annul this contract without liability or in its discretion to deduct from the contract price or consideration or otherwise recover, the full amount of such commission, percentage, brokerage or contingent fee.

10. GRATUITIES - (a) The Government may, by written notice to the Contractor, terminate the right of the Contractor to proceed under this contract if it is found after notice and hearing, by the Secretary or his duly authorized representative, that gratuities *(in the form of entertainment, gifts or otherwise)* were offered or given by the Contractor, or any agent or representative of the Contractor, to any officer or employee of the Government with a view toward securing a contract or securing favorable treatment with respect to the awarding or amending, or the making of any determinations with respect to the performing of such contract, provided, that the existence of the facts upon which the Secretary or his duly authorized representative makes such findings shall be in issue and may be reviewed in any competent court. (b) In the event this contract is terminated as provided in paragraph (a) hereof the Government shall be entitled (i) to pursue the same remedies against the Contractor as it could pursue in the event of a breach of the contract by the Contractor and (ii) as a penalty in addition to any other damages to which it may be entitled by law to exemplary damages in an amount *(as determined by the Secretary or his duly authorized representative)* which shall be not less than three nor more than ten times the costs incurred by the Contractor in providing any such gratuities to any such officer or employee. (c) The rights and remedies of the Government provided in this clause shall not be exclusive and are in addition to any other rights and remedies provided by law or under this contract.

11. RENEGOTIATION - This contract, and any subcontract hereunder, is subject to the Renegotiation Act of 1951, as amended *(50 U. S. C. App. 1211 et seq.)* and shall be deemed to contain all the provisions required by Section 104 thereof, and is subject to any subsequent act of Congress providing for the renegotiation of contracts.

12. CONDITION FOR ASSIGNMENT - This Purchase Order may not be assigned pursuant to the Assignment of Claims Act of 1940, as amended *(31 U.S.C. 203, 41 U.S.C. 15)*, unless or until the supplier has been requested and has accepted this order by executing the Acceptance hereon.

13. COMMERCIAL WARRANTY - The Contractor agrees that the supplies or services furnished under this contract shall be covered by the most favorable commercial warranties the contractor gives to any customer for such supplies or services and that the rights and remedies provided herein are in addition to and do not limit any rights afforded to the Government by any other cause of this contract.

14. PRIORITIES, ALLOCATIONS AND ALLOTMENTS DEFENSE MATERIALS SYSTEM - When the amount of the order is $500 or more the Contractor shall follow the provisions of DMS Reg. 1 and all other applicable regulations and orders of the Business and Defense Services Administration in obtaining controlled materials and other products and materials needed to fill this order.

15. FAST PA[illegible]ENT PROC[illegible]E -

a. **GENERAL** - This i[illegible] payment order. Invoices will be paid on the basis of the Contractor's certification thereon that articles listed on the order were delivered on a specified date to a post office, common carrier, or, in shipment by other means, to the point of first receipt by the Government.

b. **RESPONSIBILITY FOR SUPPLIES** - Title to the supplies shall vest in the Government upon delivery to a post office or common carrier for shipment to the specified destination. If shipment is by means other than post office or common carrier, title to the supplies shall vest in the Government upon delivery to the point of first receipt by the Government. Notwithstanding any other provision of the purchase order, the Contractor shall assume all responsibility and risk of loss for supplies (i) not received at destination, (ii) damaged in transit, or (iii) not conforming to purchase requirements. The Contractor shall either replace, repair, or correct such supplies promptly at his expense, provided instructions to do so are furnished by the Contracting Officer within ninety (90) days from the date these supplies were delivered by the Contractor to a post office or common carrier. For supplies delivered by means other than post office or common carrier, such ninety (90) day period shall commence from the date these supplies were delivered to the point of first receipt by the Government.

c. **PREPARATION OF INVOICE** -

(1) Upon delivery of supplies to a post office, common carrier, or in shipments by other means, the point of first receipt by the Government, the Contractor shall prepare an invoice in accordance with Clause 3 of the General Provisions of Purchase Order, except that invoices under a blanket purchase agreement shall be prepared in accordance with the provisions of the agreement. In shipments by either post office or common carrier, the Contractor shall either (A) cite on his invoice the date of shipment, name and address of post office or carrier, bill of lading number or other shipment document number, or (B) attach copies of such documents to his invoices as evidence of shipment. In the case of delivery by other than post office or common carrier, a receipted copy of the Contractor's delivery document shall be attached to the invoice as evidence of delivery. Regardless of delivery method the invoice shall include the following signed certification.

> "I hereby certify that I did ship on *(date)* via the *(method of shipment)* or deliver on *(date)* in accordance with shipping instructions issued by the ordering officer, supplies in the quantities shown hereon and that such supplies are in the quantity and of the quality designated by the cited purchase order. This statement is furnished to support payment of invoice."

(2) If the purchase price excludes the cost of transportation, the Contractor shall enter the prepaid shipping cost on the invoice as a separate item. The cost of parcel post insurance will not be paid by the Government.

OUTER SHIPPING CONTAINERS SHALL BE MARKED "FAST PAY"

16. *(This clause applies if this contract is for services and is not exempted by applicable regulations of the Department of Labor)*
SERVICE CONTRACT ACT OF 1965 - The Contractor and any subcontractor hereunder shall pay all of their employees engaged in performing work on the contract not less than the minimum wage specified under Section 6(a)(1) of the Fair Labor Standards Act of 1938, as amended *($1.25 per hour as of January 20, 1966)* and are subject to the regulations of the Secretary of Labor thereunder *(29 C.F.R. Part 4)*.

ADDITIONAL GENERAL PROVISIONS

17. CHANGES - The Contracting Officer may at any time, by a written order, and without notice to the sureties, make changes, within the general scope of this contract, in (i) drawings, designs, or specifications, where the supplies to be furnished are to be specially manufactured for the Government in accordance therewith; (ii) method of shipment or packing; and (iii) place of delivery. If any such change causes an increase or decrease in the cost of, or the time required for performance of this contract, whether changed or not changed by any such order, an equitable adjustment shall be made by written modification of this contract. Any claim by the Contractor for adjustment under this clause must be asserted within 30 days from the date of receipt by the Contractor of the notification of change provided that the Contracting Officer, if he decides that the facts justify such action, may receive and act upon any such claim if asserted prior to final payment, under this contract. Failure to agree to any adjustment shall be a dispute concerning a question of fact within the meaning of the clause of this contract entitled "Disputes." However, nothing in this clause shall excuse the Contractor from proceeding with the contract as changed.

18. TERMINATION FOR DEFAULT - The Contracting Officer, by written notice, may terminate this contract, in whole or in part, for failure of the Contractor to perform any of the provisions hereof. In such event, the contractor shall be liable for damages, including the excess cost of reprocuring similar supplies or services; provided that, if (i) it is determined for any reason that the Contractor was not if default or (ii) the Contractor's failure to perform is without his or his subcontractor's control, fault or negligence, the termination shall be deemed to be a termination for convenience under paragraph 19.

19. TERMINATION FOR CONVENIENCE - The Contracting Officer, by written notice, may terminate this contract, in whole or in part, when it is in the best interest of the Government. If this contract is for supplies and is so terminated, the Contractor shall be compensated in accordance with Section VIII of the Armed Services Procurement Regulation, in effect on this Contract's date. To the extent that this contract is for services and is so terminated, the Government shall be liable only for payment in accordance with the payment provisions of this contract for services rendered prior to the effective date of termination.

20. ASSIGNMENT OF CLAIMS - Claims for monies due or to become due under this contract shall be assigned only pursuant to the Assignment of Claims Act of 1940, as amended *(31 U.S.C. 203, 41 U.S.C. 15)*. However, payments to an assignee of monies under this contract shall not, to the extent provided in said Act, as amended, be subject to reduction or set-off. *(See clause 12)*

ACCEPTANCE

The Contractor hereby accepts the offer represented by this numbered purchase order as it may previously have been or is now modified, subject to all of the terms and conditions set forth, and agrees to perform the same.

NAME OF CONTRACTOR	
SIGNATURE	
TYPED NAME AND TITLE	DATE SIGNED

REMARKS

Standard Form 36
Prescribed by General Services
Administration, Nov. 1949 Edition

CONTINUATION SHEET
(SUPPLY CONTRACT)

CONTRACT, ORDER, OR INVITATION NO. (*As applicable*): M67001-68-M-1959

PAGE NO. 2

ITEM NO.	SUPPLIES OR SERVICES	QUANTITY (*Number of units*)	UNIT	UNIT PRICE	AMOUNT
	F. O. B. KING OF PRUSSIA, PA. Show transportation charg e as separate item on invoice supported by prepaid transportation bill.				
	For obligation purposes only the transportation cost chargeable to the funds indicated are estimated not to exceed $10.00.				

NAME OF BIDDER OR CONTRACTOR

COCHRANE DIV. CRANE CO.

U. S. GOVERNMENT PRINTING OFFICE: 1962—O-206193 16—60675-1

REQUISITION

1. FROM: WTplant	ACCT. SER. NO.	SHEET NO. 1 / NO. OF SHEETS	5. REQUISITION DATE 8/19/69
2. TO	ACCT. SER. NO.	7. DATE MATERIEL REQUIRED	6. REQUISITION NUMBER / 11. SHIPPER'S VOUCHER NO.
3. SHIP TO—MARK FOR 261		8. PRIORITY	12. AMOUNT OBLIGATED ~~$570.00~~ $540.80
		9. AUTHORITY OR PURPOSE	
		10. SIGNATURE	

SECTION I

4. CLS'N	CLASS	FTC	S/A CODE	APPROPRIATION SYMBOL AND SUB-HEAD	BUREAU CONTROL NO.	JOB ORDER NO.	EAN	ACTIVITY ACCTG. NO.
						AA0-23-3023-2308T		

SECTION II

ITEM NO. (a)	STOCK NUMBER AND DESCRIPTION OF MATERIEL AND/OR SERVICES (b)	UNIT OF ISSUE (c)	QUANTITY REQUESTED (d)	SUPPLY ACTION (e)
1	Diaphragm, For Top,Bottom, Service Valve, Item 29 Large	ea 12	14.00 ea	
2	Diaphragm, For Backwash & Rinse Valve, Item 29 small	ea 12	10.00 "	
3	Screw, Clamping Ring, Item 31	ea 24	.20 ea	
4	Spring, Inner Valve, Item 5	ea 8	5.00 ea	?
5	Regulator, Item 45	ea 4	20.00 "	
6	Pressure Gauge & Pulsation Damper, Item 44	ea 4	15.00 ea	
7	Limit Switch, Valve Position, Item 105	ea 6	4.00 ea	
8	Regeneration Switch& Bracket Item 106	ea 6	4.00 "	
9	Motor, Pilot Valve, Item 101	ea 1	20.00	
	Repair Parts For Pressure Filters S.O. 1172-64, 4" Hydromatic Valve SS; Cochrane Division-Crane CO. King of Prussia, Penna.			

Spare parts

(RR 85)

Rec'd 9/4/02

DD FORM 1 JUL 56 1145 — U. S. GOVERNMENT PRINTING OFFICE 16—72889-1 — U. S. M. C.

KING OF PRUSSIA, PENNA.

COMPRESS DIVISION- TRUE CO.

?

REPORT STATE FOR PRESSURE LIFTERS S/O 1115-RT AN PN CONTROLLED (STAT

1	PRESSURE GAUGE & INDICATION DEVICE, ITEM 1A	68	
2	REGULATOR, ITEM 1B	68	
3	SPRING, INNER ASTAC, ITEM 2	68	
4	SPRING, CLAMPING BAND, ITEM 3A	68	
5	DIAPHRAGM, FOR RECEIVER & HIGHS ASTAC, ITEM 3A/	68	
6	DIAPHRAGM, FOR TOP BOTTOM, SPLATCH ASTAC, ITEM 3A	68	
7	MANUAL SWITCH, ASTAC POSITION, ITEM 3C	68	
8	REGENERATION SWITCH & BRACKET, ITEM 3D	68	
9	PORT, PILOT ASTAC, ITEM 3E	68	

RPS 5 Retention Utilities

CHECKED BOX APPLIES	[X] ORDER FOR SUPPLIES OR SERVICES	[ ] REQUEST FOR QUOTATIONS NO. RETURN COPY(IES) OF THIS QUOTE BY (THIS IS NOT AN ORDER. See DD Form 1155r)	PAGE 1 OF 3

1. CONTRACT/PURCH ORDER NO.	2. DELIVERY ORDER NO.	3. DATE OF ORDER	4. REQUISITION/PURCH REQUEST NO.	5. CERTIFIED FOR NATIONAL DEFENSE UNDER DMS REG 1 DO
M67001-69-M-2684		69 Mar 07	M67001-9030-W003	

6. ISSUED BY: CODE
Purchasing & Contracting Branch
BMB, Bldg 1211, P.O. Box 15, MCB.,
Camp Lejeune, N. Carolina 28542

7. ADMINISTERED BY: (If other than 6) CODE

8. DELIVERY FOB [ ] DESTINATION [X] OTHER (See Schedule if other)

9. CONTRACTOR/QUOTER CODE FACILITY CODE

NAME AND ADDRESS
Mechanical Equipment Co.
Box 4066
Charlotte, North Carolina 28204
H/ebb

PRIORITY:14

10. DELIVER TO FOB POINT BY: 69 Mar 21

11. CHECK IF SMALL BUSINESS [X]

12. DISCOUNT TERMS: Net 30 day

13. MAIL INVOICES TO: (In sextuplicate) Same as Block 14

14. SHIP TO: CODE
Freight Traffic Branch
Bldg 1011, Camp Lejeune, N.Carolina 28542
M67001-69-M-2684

15. PAYMENT WILL BE MADE BY: CODE
Base Disbursing Officer
MCB, Camp Lejeune, North Carolina 28542

MARK ALL PACKAGES AND PAPERS WITH CONTRACT OR ORDER NUMBER

16. TYPE OF ORDER
DELIVERY [ ] This delivery order is subject to instructions contained on this side of form only and is issued on another Government agency or in accordance with and subject to terms and conditions of above numbered contract.
PURCHASE [X] Reference your telequote of 69Mar07, furnish the following on terms specified herein, including; for U. S. purchases, General Provisions of Purchase Order on DD Form 1155r (Except CLAUSE NO. 13 APPLIES ONLY IF THIS BOX [ ] IS CHECKED, and NO. 15 IF THIS BOX [ ] IS CHECKED); special provisions ; and delivery as indicated. This purchase is negotiated under authority of 10 USC 2304(a)(3) or as specified in the schedule if within the U. S., its possessions or Puerto Rico; if otherwise, under 2304(a)(6).

[ ] If checked, Additional General Provisions apply; Supplier shall sign "Acceptance" on DD Form 1155r and return copies.

17. ACCOUNTING AND APPROPRIATION DATA – ACCOUNTING CLASSIFICATION (REV. 7-65)

ITEM NO.	APPROPRIATION SYMBOL AND SUBHEAD	OBJECT CLASS	BUREAU CONT. NO.	SUB-ALLOT.	AUTH'N ACCT'G ACT'Y	TRANS. TYPE	PROPERTY ACCT'G ACT'Y	COUNTRY	COST CODE	AMOUNT
all	17 x 4913	-	62436	-	67001	1C	150	53000 HV9320762434		$149.60

18. ITEM NO.	19. SCHEDULE OF SUPPLIES/SERVICES	20. QUANTITY ORDERED/ ACCEPTED*	21. UNIT	22. UNIT PRICE	AMOUNT
	FAILURE TO COMPLY WITH SHIPPING INSTRUCTIONS MAY RESULT IN REJECTION OF MATERIAL. NO PARTIAL SHIPMENTS WILL BE ACCEPTED UNLESS SPECIFICALLY AUTHORIZED HEREIN. THIS IS A CONFIRMING ORDER. Confirms telephonic order of same number and date given to your Mr. Bumgardener by our MR. HARRIS. DO NOT DUPLICATE SHIPMENT. M93058 - MMLF 99 Allitems 0900-000-0000 PARTS FOR: Chronoflo Telemetric Receiver Code No. 0232-ol, Order No. 30805A Receiver No. 13630:				plus tran

*If quantity accepted by the Government is same as quantity ordered, indicate by √ mark. If different, enter actual quantity accepted below quantity ordered and encircle.

24. UNITED STATES OF AMERICA
BY: ROGER L. BATTS Roger L. Batts
CONTRACTING/ORDERING OFFICER

25. TOTAL $149.60

29. DIFFERENCES

26. QUANTITY IN COLUMN 20 HAS BEEN:
[ ] RECEIVED [ ] INSPECTED [ ] ACCEPTED, AND CONFORMS TO THE CONTRACT EXCEPT AS NOTED

Date (Signature of authorized Government representative)

27. SHIP. NO. [ ] FINAL [ ] PARTIAL

28. D. O. VOUCHER NO.

30. INITIALS

32. PAID BY
67001-
SYM #5190
MCB CLNC

33. AMOUNT VERIFIED CORRECT FOR

31. PAYMENT [ ] COMPLETE [ ] PARTIAL [ ] FINAL

34. CHECK NUMBER

35. BIL. OF LADING NO.

36. I CERTIFY that this account is correct and proper for payment
(Signature and title of Certifying Officer)

37. RECEIVED AT	38. RECEIVED BY	39. DATE RECEIVED	40. TOTAL CONTAINERS	41. S/R ACCOUNT NUMBER	42. S/R VOUCHER NO.

DD FORM 1 AUG 66 1155 (8-PT) (NAVY)
S/N-0101-805-1204

Form Approved by Comptroller General, U. S., 27 May 66
Exception to SF 18 under $2,500 Approved by Budget Bureau Oct 66

THIS PARAGRAPH APPLIES ONLY TO QUOTATIONS SUBMITTED: Supplies are of domestic origin unless otherwise indicated by quoter. The Government reserves the right to consider quotations or modifications thereof received after the date indicated should such action be in the interest of the Government. This is a request for information and quotations furnished are not offers. When quoting, complete blocks 11, 12, 22, 23, 25. If you are unable to quote, please advise. This request does not commit the Government to pay any cost incurred in preparation or the submission of this quotation or to procure or contract for supplies or services.

GENERAL PROVISIONS

1. INSPECTION AND ACCEPTANCE - Inspection and acceptance will be at destination, unless otherwise provided. Until delivery and acceptance, and after any rejections, risk of loss will be on the contractor unless loss results from negligence of the Government.

2. VARIATION IN QUANTITY - No variation in the quantity of any item called for by this contract will be accepted unless such variation has been caused by conditions of loading, shipping, or packing, or allowances in manufacturing processes, and then only to the extent, if any, specified elsewhere in this contract.

3. PAYMENTS - Invoices shall be submitted in quadruplicate *(one copy shall be marked "Original")* unless otherwise specified, and shall contain the following information: Contract or Order number, Item number, contract description of supplies or services, sizes, quantities, unit prices and extended totals. Bill of lading number and weight of shipment will be shown for shipments on Government Bills of Lading. Unless otherwise specified, payment will be made on partial deliveries accepted by the Government when the amount due on such deliveries so warrants.

4. DISCOUNTS - Discount time will be computed from date of delivery at place of acceptance or from receipt of correct invoice at the office specified by the Government, whichever is later. Payment is made, for discount purposes, when check is mailed.

5. DISPUTES - (a) Except as otherwise provided in this contract, any dispute concerning a question of fact arising under this contract which is not disposed of by agreement shall be decided by the Contracting Officer, who shall mail or otherwise furnish a copy thereof to the Contractor. This decision shall be final and conclusive unless, within 30 days from the date of receipt of such copy, the Contractor mails or otherwise furnishes to the Contracting Officer a written appeal addressed to the Secretary. The decision of the Secretary or his duly authorized representative for the determination of such appeals shall be final and conclusive unless determined by a court of competent jurisdiction to have been fraudulent, or capricious, or arbitrary, or so grossly erroneous as necessarily to imply bad faith, or not supported by substantial evidence. The Contractor shall be afforded an opportunity to be heard and to offer evidence in support of his appeal. Pending final decision of a dispute hereunder, the Contractor shall proceed diligently with the performance of the contract and in accordance with the Contracting Officer's decision. (b) This "Disputes" clause does not preclude consideration of law questions in connection with decisions provided for in (a) above, provided, that nothing in this contract shall be construed as making final the decision of any administrative official, representative, or board on a question of law.

6. FOREIGN SUPPLIES - This contract is subject to the Buy American Act *(41 U.S.C. 10 a-d)* as implemented by Executive Order 10582 of December 17, 1954, and any restrictions in appropriation acts on the procurement of foreign supplies.

7. CONVICT LABOR - The Contractor agrees not to employ for work under this contract any person undergoing sentence of imprisonment at hard labor.

8. OFFICIALS NOT TO BENEFIT - No member of or Delegate to Congress or resident commissioner, shall be admitted to any share or part of this contract, or to any benefit that may arise therefrom, but this provision shall not be construed to extend to this contract if made with a corporation for its general benefit.

9. COVENANT AGAINST CONTINGENT FEES - The Contractor warrants that no person or selling agency has been employed or retained to solicit or secure this contract upon an agreement or understanding for a commission, percentage, brokerage, or contingent fee, excepting bona fide employees or bona fide established commercial or selling agencies maintained by the Contractor for the purpose of securing business. For breach or violation of this warranty the Government shall have the right to annul this contract without liability or in its discretion to deduct from the contract price or consideration or otherwise recover, the full amount of such commission, percentage, brokerage or contingent fee.

10. GRATUITIES - (a) The Government may, by written notice to the Contractor, terminate the right of the Contractor to proceed under this contract if it is found after notice and hearing, by the Secretary or his duly authorized representative, that gratuities *(in the form of entertainment, gifts or otherwise)* were offered or given by the Contractor, or any agent or representative of the Contractor, to any officer or employee of the Government with a view toward securing a contract or securing favorable treatment with respect to the awarding or amending, or the making of any determinations with respect to the performing of such contract, provided, that the existence of the facts upon which the Secretary or his duly authorized representative makes such findings shall be in issue and may be reviewed in any competent court. (b) In the event this contract is terminated as provided in paragraph (a) hereof the Government shall be entitled (i) to pursue the same remedies against the Contractor as it could pursue in the event of a breach of the contract by the Contractor and (ii) as a penalty in addition to any other damages to which it may be entitled by law to exemplary damages in an amount *(as determined by the Secretary or his duly authorized representative)* which shall be not less than three nor more than ten times the costs incurred by the Contractor in providing any such gratuities to any such officer or employee. (c) The rights and remedies of the Government provided in this clause shall not be exclusive and are in addition to any other rights and remedies provided by law or under this contract.

11. RENEGOTIATION - This contract, and any subcontract hereunder, is subject to the Renegotiation Act of 1951, as amended *(50 U. S. C. App. 1211 et seq.)* and shall be deemed to contain all the provisions required by Section 104 thereof, and is subject to any subsequent act of Congress providing for the renegotiation of contracts.

12. CONDITION FOR ASSIGNMENT - This Purchase Order may not be assigned pursuant to the Assignment of Claims Act of 1940, as amended *(31 U.S.C. 203, 41 U.S.C. 15)*, unless or until the supplier has been requested and has accepted this order by executing the Acceptance hereon.

13. COMMERCIAL WARRANTY - The Contractor agrees that the supplies or services furnished under this contract shall be covered by the most favorable commercial warranties the contractor gives to any customer for such supplies or services and that the rights and remedies provided herein are in addition to and do not limit any rights afforded to the Government by any other cause of this contract.

14. PRIORITIES, ALLOCATIONS AND ALLOTMENTS DEFENSE MATERIALS SYSTEM - When the amount of the order is $500 or more the Contractor shall follow the provisions of DMS Reg. 1 and all other applicable regulations and orders of the Business and Defense Services Administration in obtaining controlled materials and other products and materials needed to fill this order.

15. FAST PAYMENT PROCEDURE -

a. GENERAL - This is a fast payment order. Invoices will be paid on the basis of the Contractor's certification thereon that articles listed on the order were delivered on a specified date to a post office, common carrier, or, in shipment by other means, to the point of first receipt by the Government.

b. RESPONSIBILITY FOR SUPPLIES - Title to the supplies shall vest in the Government upon delivery to a post office or common carrier for shipment to the specified destination. If shipment is by means other than post office or common carrier, title to the supplies shall vest in the Government upon delivery to the point of first receipt by the Government. Notwithstanding any other provision of the purchase order, the Contractor shall assume all responsibility and risk of loss for supplies (i) not received at destination, (ii) damaged in transit, or (iii) not conforming to purchase requirements. The Contractor shall either replace, repair, or correct such supplies promptly at his expense, provided instructions to do so are furnished by the Contracting Officer within ninety (90) days from the date these supplies were delivered by the Contractor to a post office or common carrier. For supplies delivered by means other than post office or common carrier, such ninety (90) day period shall commence from the date these supplies were delivered to the point of first receipt by the Government.

c. PREPARATION OF INVOICE -

(1) Upon delivery of supplies to a post office, common carrier, or in shipments by other means, the point of first receipt by the Government, the Contractor shall prepare an invoice in accordance with Clause 3 of the General Provisions of Purchase Order, except that invoices under a blanket purchase agreement shall be prepared in accordance with the provisions of the agreement. In shipments by either post office or common carrier, the Contractor shall either (A) cite on his invoice the date of shipment, name and address of post office or carrier, bill of lading number or other shipment document number, or (B) attach copies of such documents to his invoices as evidence of shipment. In the case of delivery by other than post office or common carrier, a receipted copy of the Contractor's delivery document shall be attached to the invoice as evidence of delivery. Regardless of delivery method the invoice shall include the following signed certification.

> "I hereby certify that I did ship on *(date)* via the *(method of shipment)* or deliver on *(date)* in accordance with shipping instructions issued by the ordering officer, supplies in the quantities shown hereon and that such supplies are in the quantity and of the quality designated by the cited purchase order. This statement is furnished to support payment of invoice."

(2) If the purchase price excludes the cost of transportation, the Contractor shall enter the prepaid shipping cost on the invoice as a separate item. The cost of parcel post insurance will not be paid by the Government.

OUTER SHIPPING CONTAINERS SHALL BE MARKED "FAST PAY"

16. *(This clause applies if this contract is for services and is not exempted by applicable regulations of the Department of Labor)*
SERVICE CONTRACT ACT OF 1965 - The Contractor and any subcontractor hereunder shall pay all of their employees engaged in performing work on the contract not less than the minimum wage specified under Section 6(a)(1) of the Fair Labor Standards Act of 1938, as amended *($1.25 per hour as of January 20, 1966)* and are subject to the regulations of the Secretary of Labor thereunder *(29 C.F.R. Part 4)*.

ADDITIONAL GENERAL PROVISIONS

17. CHANGES - The Contracting Officer may at any time, by a written order, and without notice to the sureties, make changes, within the general scope of this contract, in (i) drawings, designs, or specifications, where the supplies to be furnished are to be specially manufactured for the Government in accordance therewith; (ii) method of shipment or packing; and (iii) place of delivery. If any such change causes an increase or decrease in the cost of, or the time required for performance of this contract, whether changed or not changed by any such order, an equitable adjustment shall be made by written modification of this contract. Any claim by the Contractor for adjustment under this clause must be asserted within 30 days from the date of receipt by the Contractor of the notification of change provided that the Contracting Officer, if he decides that the facts justify such action, may receive and act upon any such claim if asserted prior to final payment, under this contract. Failure to agree to any adjustment shall be a dispute concerning a question of fact within the meaning of the clause of this contract entitled "Disputes." However, nothing in this clause shall excuse the Contractor from proceeding with the contract as changed.

18. TERMINATION FOR DEFAULT - The Contracting Officer, by written notice, may terminate this contract, in whole or in part, for failure of the Contractor to perform any of the provisions hereof. In such event, the contractor shall be liable for damages, including the excess cost of reprocuring similar supplies or services; provided that, if (i) it is determined for any reason that the Contractor was not if default or (ii) the Contractor's failure to perform is without his or his subcontractor's control, fault or negligence, the termination shall be deemed to be a termination for convenience under paragraph 19.

19. TERMINATION FOR CONVENIENCE - The Contracting Officer, by written notice, may terminate this contract, in whole or in part, when it is in the best interest of the Government. If this contract is for supplies and is so terminated, the Contractor shall be compensated in accordance with Section VIII of the Armed Services Procurement Regulation, in effect on this Contract's date. To the extent that this contract is for services and is so terminated, the Government shall be liable only for payment in accordance with the payment provisions of this contract for services rendered prior to the effective date of termination.

20. ASSIGNMENT OF CLAIMS - Claims for monies due or to become due under this contract shall be assigned only pursuant to the Assignment of Claims Act of 1940, as amended *(31 U.S.C. 203, 41 U.S.C. 15)*. However, payments to an assignee of monies under this contract shall not, to the extent provided in said Act, as amended, be subject to reduction or set-off. *(See clause 12)*

ACCEPTANCE

The Contractor hereby accepts the offer represented by this numbered purchase order as it may previously have been or is now modified, subject to all of the terms and conditions set forth, and agrees to perform the same.

NAME OF CONTRACTOR	
SIGNATURE	
TYPED NAME AND TITLE	DATE SIGNED

REMARKS

STANDARD FORM 36, JULY 1966 GENERAL SERVICES ADMINISTRATION FED. PROC. REG. (41 CFR) 1-16.101	CONTINUATION SHEET	REF. NO. OF DOC. BEING CONT'D. M67001-69-M-2684	PAGE 2 OF 3

NAME OF OFFEROR OR CONTRACTOR

MECHANICAL EQUIPMENT CO.

ITEM NO.	SUPPLIES/SERVICES	QUANTITY	UNIT	UNIT PRICE	AMOUNT
	M67001-9030-W003				
1	Power Supply Module P/N 162700	2	ea	45.40	90.80
	M67001-9030-W004				
2	Etched circuit plug-in Board, P/N (C139532) No. 165869	1	ea	39.70	39.70
	PARTS FOR: Chronoflo Telemetric Transmitter Ser 4376, Model CTUAX:				
	M67001-9030-W005				
3	Motor, Sychronus, Type B-3, 110/120V, 60 cy, Model 6123195, RPM 4 W-4, P/N DM238	2	ea	9.55	19.10
		T O T A L			$149.60

TO APPLY TO Item 2: The superseding part number, equal number or items are acceptable providing they meet all specifications and can be utilized without any modification to parent equipment of installation.

F. O. B. PROVIDENCE, RI. Material to be shipped to Camp Lejeune, N.C. All transportation charges prepaid and listed on dealers invoice as a separate item. Charges in excess of $25.00 must be supported by copy of PAID carriers bill.FISCAL INFO: Transportation charges estimated not to exceed $10.00.

* U.S. GOVERNMENT PRINTING OFFICE : 1968 OF--285-145 (9-G)

REQUISITION

SHEET NO.	NO. OF SHEETS	5. REQUISITION DATE	6. REQUISITION NUMBER
1		8/23/68	

1. FROM: WTP-3**** 68-69 — ACCT. SER. NO.

2. TO — ACCT. SER. NO.

3. SHIP TO—MARK FOR: RR 85

7. DATE MATERIEL REQUIRED

8. PRIORITY

9. AUTHORITY OR PURPOSE

10. SIGNATURE

11. SHIPPER'S VOUCHER NO.

12. AMOUNT OBLIGATED: ~~$80.00~~ $61.80

SECTION I

4. CLS'N	CLASS	FTC	S/A CODE	APPROPRIATION SYMBOL AND SUB-HEAD	BUREAU CONTROL NO.	JOB ORDER NO.	EAN	ACTIVITY ACCTG. NO.
						AA9-2308-3003~~5~~4-00		

SECTION II

ITEM NO. (a)	STOCK NUMBER AND DESCRIPTION OF MATERIEL AND/OR SERVICES (b)		UNIT OF ISSUE (c)	QUANTITY REQUESTED (d)	SUPPLY ACTION (e)
	repair parts for Diaphragm Valve, normally closed, Series 427, 3 in. N.P.T. (Both ends) Max WKG. press. I25 psi.				
I	Gasket, Diaphragm washer	Part # 424-R	ea.	6	.20 ea
2	O-Ring Pa I-II4	Part # 326-P	"	6	.40 ea
3	Shaft	Part # 427-LL	"	4	8.00 ea
4	Nut, Hex Jam Brass 5/I6-24	Part # 4	"	6	.20 ea
5	Diaphragm	Part # 427-F	"	3	5.00 ea
6	Retainer - Disc.	Part # 427-H	"	2	5.00 ea
	Just; Repair parts for Water Softener Valve RR-85				
	SS; AquaMatic INC. Rockford, Illinois				

Item 3 short

Rec Item 1, 2, 4, 5, 6 on 9/24/68

Repair parts for Diaphragm Valve, normally closed, Series 127, 3 in.
M.P.T. (both ends) Max WP. press. 125 psi.

1	Gasket, Diaphragm washer	Part # 127-1	1
2	O-Ring #5 T-214	Part # 326-2	1
3	Shaft	Part # 127-2A	1
4	Nut, Hex Jam, Brass 5/16-24	Part # 4	8
5	Diaphragm	Part # 127-	1
6	Retainer - Inc.	Part # 127-1	1

Subj: Repair parts for Water Softener Valve RS-85

SS: Aquamatic INC.
Rockford, Illinois

TAB PLACEMENT HERE

DESCRIPTION:

2

☐ Tab page did not contain hand written information

☑ Tab page contained hand written information
*Scanned as next image

COCHRANE WATER CONDITIONING EQUIPMENT

2.0 FILTER OPERATION DATA AND INSTRUCTIONS

RR-85 Plant Sales order 1172-64

No. of Units Three S.O. 1172-64
Filter Size 8'-0" Dia. x 6'-0" Straight Side
Bed Type: Sand and Gravel

Valve cat. # 13525464
auto cat. No. F-118331

BED DEPTH AND SIZES

26"	Sand	20 - 35 Mesh
4"	Sand	6 - 10 Mesh
4"	Gravel	1/4" - 1/8"
4"	Gravel	1/2" - 1/4"
4"	Gravel	1" - 1/2"

SERVICE

Maximum flow rate (per unit) ---------- 143 gpm
Maximum allowable pressure drop across unit at full load 20 ft.

1. Hydromatic Valve in #1 position.
2. Inlet and outlet isolating valves open.
3. When pressure drop across unit is 20 ft. at full load, or every 24 hours, backwash is necessary.

BACKWASH

Rate ---------- 755 gpm
Time (Minimum) ---------- 7 ~~5.4~~ min.
Backwash regulator gauge setting ---------- 12.6 psi

RINSE

Rate ---------- 143 gpm
Time ---------- 4 ~~5.4~~ min.
Rinse regulator gauge setting ---------- 12.6 psi

6303.2000
11-2-64

COCHRANE WATER CONDITIONING EQUIPMENT

(S.O. 1172-64)

OPERATING INSTRUCTIONS

PRESSURE FILTER

The pressure filters are equipped with a single hydromatic valve and cylinder operated gate valves on each unit, for the purpose of controlling the sub-surface and the backwash function.

The backwashing of the filter bank can be initiated automatically by setting the pins in the tork timer for the time of day and the days of the week, which it is desired to have the filters backwashed.

The filters should be backwashed at least once a day or when the pressure drop across the filter bank has reached 20 feet.

The backwash operation should be continued until the water leaving the filter is as clear as the water coming into the bottom of it.

The operation of the automatic components is as follows:

The seven day time switch runs continually and when a pin from this time switch trips, it starts the backwashing operation for all three filters.

The step switch is arranged so that filter #1 is completely backwashed, rinsed, and returned to stand by first, followed by filter numbers 2, which backwash is done completely then filter #3.

When the pin trips and the backwash starts, the backwash timer starts and times the length of backwash and rinse.

As the backwash timer runs, T-4 pins on the timer drum actuate the step switch which moves the filters through the backwash operation.

Flow Rates

During the initial backwash the flow rate should be adjusted on the pressure regulators mounted on the hydromatic to agree with the pressure settings and flow rates shown on the Operation Data.

ROTARY SURFACE WASH - PALMER AGITATOR

In some filtering operations, the filtered solids form a mat on the top of the bed that is not easily broken up. Backwashing would crack the mat and perhaps turn over one portion, which would then remain in the filter bed as an unbroken clump or "mud ball", too big to be washed out. In these cases the mat has to be broken up mechanically before the unit is backwashed. The rotary surface wash (Palmer Agitator) plays pressure water jets on the top of the bed to break up the matted and caked solids.

The agitator consists of a supporting hub and two arms. Nozzles are installed in the arms so that the jet effect of the water leaving them is sufficient to cause the arms to rotate.

The arms are parallel to and one to three inches above the top layer of filtering material. The high velocity jet of water strikes the top of the filter bed and breaks up any deposits on the top of the bed, agitating and scrubbing the material on top of the filter bed.

A pressure of 40 to 75 lbs. per square inch must be maintained in the rotary surface washer nozzles for effective operation. If a pressure supply is not available, a separate booster pump must be provided. The volume of water needed will be approximately 1 gpm per square foot of filter area.

The agitator is to be operated for a period of 2 to 3 minutes with the backwash outlet valve open, before the backwashing of the filter.

There is an alternate method for the operation of the agitator. Operate the agitator with the backwash outlet valve open for 2 to 3 minutes. One minute before shutting off the agitator, start backwashing the filter. Then stop the agitator.

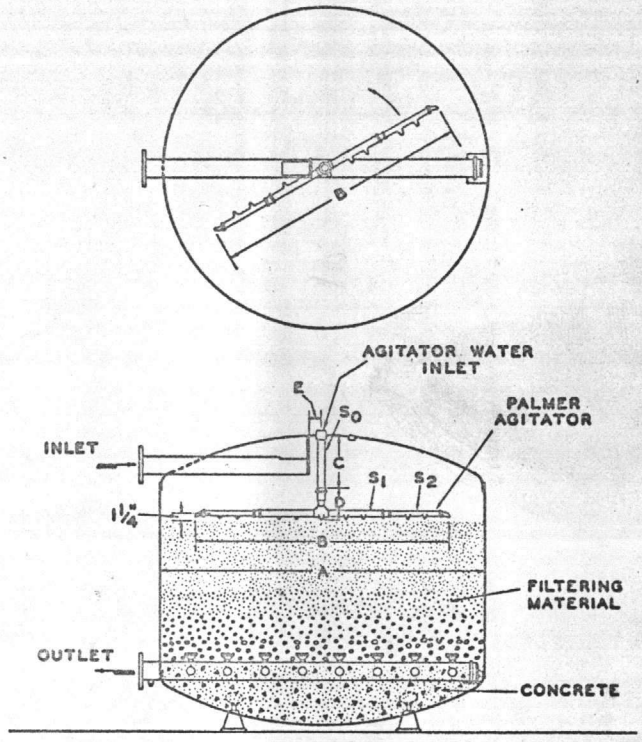

E-13119

OPERATION DATA

Rate - 30 Gpm

Pressure - 50 Psi

Time - 5.4 Minutes

Pressure Setting - 5 Psi Diff.

(S.O. 1172-64)

PRESSURE FILTER TIMER SETTINGS

OPERATION	ALLOTTED TIME	ACCUMULATED TIME	SLOT NUMBER
Lag	0.6	0.6	1
Backwash	5.4	6.0	10
Lag	0.6	6.6	11
Rinse	5.4	12.0	20
Lag	0.6	12.6	21
Backwash	5.4	18.0	30
Lag	0.6	18.6	31
Rinse	5.4	24.0	40
Lag	0.6	24.6	41
Backwash	5.4	30.0	50
Lag	0.6	30.6	51
Rinse	5.4	36.0	60
Overrun	24	60.0	100

A 60 minute timer containing 100 slots each slot equal to 0.6 minutes.

		FILTER #1					FILTER #2				FILTER #3							
		SERVICE	BACKWASH	LAG	RINSE	LAG	BACKWASH	LAG	RINSE	LAG	BACKWASH	LAG	RINSE					
COMMON CYCLE TIMER SWITCHES (60 MIN. = 1 REV.)	T1																	
	T4																	
	T3																	
APPR. TIME IN MIN'S																		
PERCENT ROTATION																		
CAM	STEP SWITCH STEP NO. → / EQUIPMENT:	1	2	3	4	5	6	7	8	9	10	11	12					
X.																		
1	HYDROMATIC VALVE MOTOR		2		4		2		4		2		4					
2		1		3		1		3		1		3						
3	SURFACEWASH VALVE SW-1																	
4	BOTTOM TANK VALVE BT-1																	
5	BACKWASHING LIGHT																	
6	SURFACEWASH VALVE SW-2																	
7	BOTTOM TANK VALVE BT-2																	
8	BACKWASHING LIGHT																	
	SURFACEWASH VALVE SW-3																	
	BOTTOM TANK VALVE BT-3																	
11	BACKWASHING LIGHT																	
12																		
13																		
14																		
15																		
16																		
17																		
18																		
19																		

FILTER #1 FILTER #2 FILTER #3

HYDROMATIC VALVE LIMIT SWITCH POSITION No.

S.O. 1172-64 DATE

THIS DRAWING IS FOR APPROVAL
RETURN ONE PRINT IMMEDIATELY
TO AVOID DELAY IN FABRICATION

CERTIFIED CONSTRUCTION DRAWING
FOR YOUR ORDER NO.

F. T. Haeussner Jr.

DESTROY PREVIOUS COPIES
THIS PRINT DUPLICATES PRINTS PREVIOUSLY FORWARDED YOU EXCEPT FOR CHANGES AS SPECIFIED IN REVISION BLOCK

NOTES:

1. X AREA INDICATES CAM SEGMENTS REMOVED.

SCALE	DRAWN	DATE	CHKD.	FIRST USED ON S.O.	APPD.	LTR.	DATE	REVISION	DFT. APP.	ENG. APP.
~	L.S.	4-23-64		1172-64	N.T.L.					

COCHRANE DIVISION
CRANE CO.
PHILADELPHIA 32, PA.

S.O. 1172-64

STEP SWITCH ARRANGEMENT
3-UNIT FILTER

SIZE	CHANGE	CHG. LTR.
D	140791	

124863

TALLY NO. 1 2 3 4 5 6 7 8 9 1 [redacted] 4 25 26 27 28 29 30 31 32 33 34 35 36 37 38 39 40 41 42 43 44 45 46 47 48 49 50

PG 2 OF 2	ORDER/REC'PT NO. (Or IFB/RFP/ [redacted] o.) M 67001- 67-M-3123	SCHEDULE CONTINUATION SHEET
ISSUED BY PURCHASING & CONTRACTING BRANCH		NAME OF CONTRACTOR (Or bidder) NEPTUNE METER COMPANY

MARK ALL PACKAGES AND PAPERS WITH CONTRACT AND/OR ORDER NUMBER

ITEM NO.	QUANTITY (No. of units)	UNIT	UNIT PRICE	SCHEDULE OF SUPPLIES OR SERVICES	AMOUNT	QUANTITY ACCEPTED
3	3	EA	.60	51 TEETH, P/N C-4A	$1.80	
4	2	EA	12.50	GEAR TRAIN, P/N C-6B	25.00	
5	1	SE	2.00	BUSHING, P/N C8A2	2.00	
6	1	EA	1.00	BUSHING, P/N C-8A5	1.00	
7	2	EA	69.00	IMPELLER, P/N C-8B	138.00	
8	2	EA	1.00	IMPELLER, P/N C-8B4	2.00	
9	2	EA	6.30	IMPELLER, P/N C-8A7	12.60	
					$191.40	
				LESS 22% DISCOUNT---	42.11	
				TOTAL----------	$149.29	

COCHRANE WATER CONDITIONING EQUIPMENT

2.1 OPERATION DATA FOR SODIUM ZEOLITE SOFTENERS

S.O. 1172-64

Units, Number and Size..... Two — 5'-0" Diam. x 5'-0" Straight Side

Exchange Material - Cochranex "CRZ" 2'6" DEEP..... 39.2 cu. ft/unit

Expected Capacity per Unit..... 108,500 Gal. or 1020 Kgr.

Total Hardness..... 9.35 Gr/gal.

Maximum Service Rate..... 195 gpm/unit

Total hardness of average treated water..... 2 ppm as $CaCO_3$

Total hardness at Run End Point..... Hard water per soap test
5 drops per 40 ml.

Backwash

Rate at 50 F..... 78 gpm

Time - Minimum..... 10 minutes

Pressure Setting at 50 F. (SEE ADJUSTABLE NOZZLE CHART) _____ psi

Brine Draw

Salt per regeneration..... 460 lbs.

Measuring Tank..... 4'-6" diameter

Draw depth..... 18.5 inches

Draw time..... 15 minutes

Eductor inlet pressure..... 50 psi

Eductor water rate..... 13 gpm

Total flow rate..... 13 gpm

Salt concentration entering unit..... 15 percent

Brine Displacement (Slow Rinse)

Time..... 55 minutes

Rate..... 13 gpm

Fast Rinse

Flow rate..... 98 gpm

Pressure setting. (SEE ADJUSTABLE NOZZLE CHART) _____ psi

Time..... 20 minutes

Rinse End Point

Chlorides..... No taste of salt in waste water

Total Hardness..... Soft water by soap test

IN-LINE INC.

2072 N. Church St.

Telephone 919/446-0248 • Rocky Mount, N. C. 27801 • P. O. Drawer 4505

Bill 424

1st Sign

Bill 427

3rd Sign

5023

2.2 OPERATORS INSTRUCTIONS

Semi-Automatic Operation

When the unit no longer delivers good water or when the gallon capacity has been treated, use procedure A to D for regeneration.

To start a regeneration, press "Start Regeneration" pushbutton located in control box.

Automatic Operation

Water Meter

The water meter should be set for the expected capacity of the unit. As water passes through the meter, the hand will move toward zero. The automatic regeneration will start when the hand reaches zero.

Time Clock

Units equipped with a Class 1 time controller will be regenerated on the days and at the time of day set on the A and B dial.

Regeneration is carried out using the following steps.

A. Backwash
B. Regeneration
C. Slow Rinse
D. Rinse
E. Return to Service

1. Automatic And/Or Semi-Automatic Operation

   A. Backwash

      The pilot solenoid valve will open for 30 seconds, then will close. The solomatic valve has been advanced one position and is now backwashing the unit.

Pilot water from the Solo-matic valve closes the diaphragm by-pass valves on the softener and the brine tank refill valve. The pilot water is also imposed on the Slow Rinse float control.

The adjustable backwash orifice should be set for the proper flow rate. (See Operation Data). After the proper length of time, the valve will proceed to the next position.

B. Regenerant Draw

The pilot solenoid valve opens, and closes after 30 seconds. The solo-maitc valve is now in Position #2 and the regenerant draw begins. The adjustable nozzle should be set for the proper Flow Rate. (See Operation Data).

Models 54 and 60 adjust the valve upstream of the eductor.

C. Slow Rinse

When the correct amount of brine has been drawn from the tank, the Slow Rinse float control closes the diaphragm valve in the brine suction line, which allows pressure water to pass through the eductor without drawing brine.

After the proper length of time the valve will proceed to the next position.

D. Rinse

The pilot solenoid valve opens for 30 seconds, then closes. The solomatic valve is now in Position #3 - Rinse.

The inlet water pressure should be adjusted to 30 p.s.i. If the water pressure is above or below this point, the rinse time will be reduced or extended above that shown in the Operation Data.

2" and 2-1/2" solomatic valves (Models 54 and 60) are equipped with adjustable rinse orifices. This orifice should be set for the proper flow rate.

When the rinse is completed, the solo-matic valve will return to service.

E. Return to Service

The pilot solenoid valve opens, then closes after 30 seconds. The solo-maitc valve has been advanced one position and is now back on the line as a source of treated water.

2. Manual Operation

The solomatic valve is supplied with a by-pass line around the pilot solenoid valve.

The valve can be advanced to any position by manually opening, waiting 30 seconds and then closing the by-pass valve. The operation of opening and closing the valve will advance the solomatic valve one position.

A pointer on the top of the valve indicates the position of the valve. Water comes out of drain line in all positions except service.

3. Rate

All flow rates, service, backwash, brine and fast rinse should be checked and agree with Operation Data

2.12 BACKWASH RATE

ZEOLITE MATERIAL - CRW - CRZ - CRJ
BACKWASH TIME - 10 MINUTES
PERCENT EXPANSION - 50%

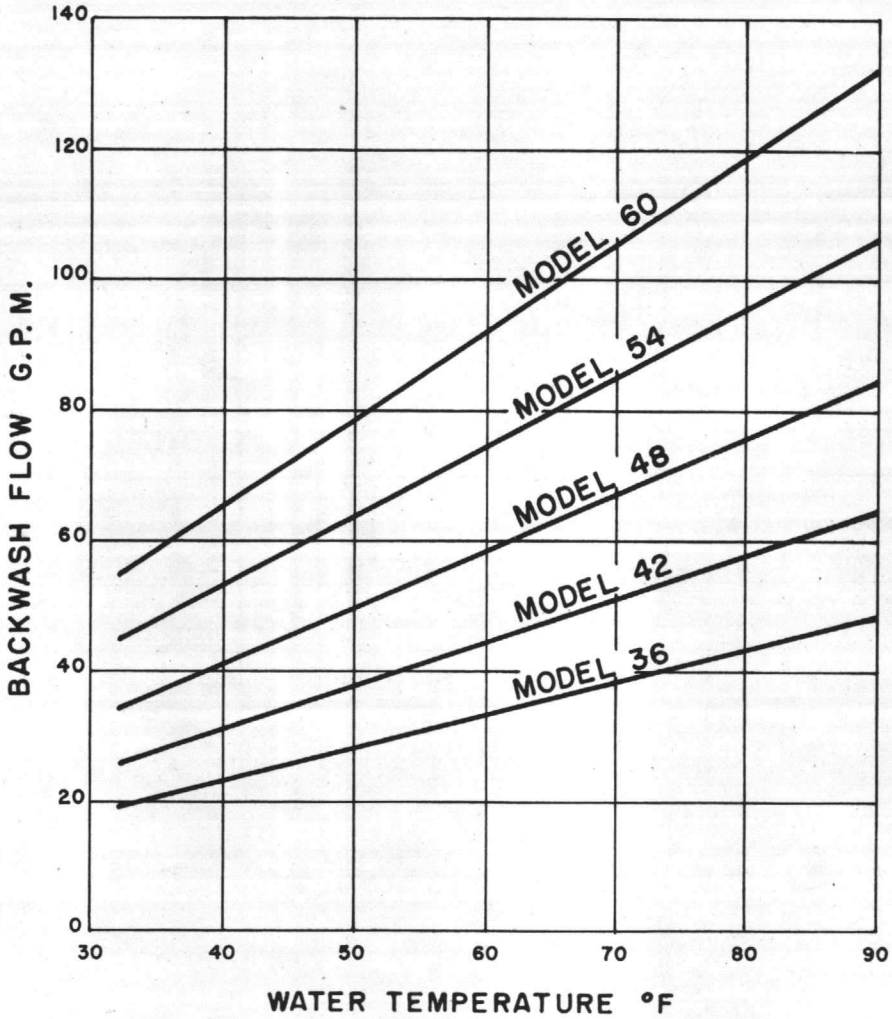

CAUTION - IF ZEOLITE WASHES OUT AT SETTING INDICATED, REDUCE THE SETTING AT ONCE.

RUN END POINT

All resin ratings except 30 Kgr./cu. ft.

5 drops B & B soap solution in 40 ml sample.

Resin ratings of 30 Kgr./cu. ft.

8 drops B & B soap solution in 40 ml sample.

SERIES 305
2 - 2 1/2" IPS SOLOMATIC VALVE
APPROX. FLOW RATES THRU RAPID RINSE
AND BACKWASH ADJUSTMENTS

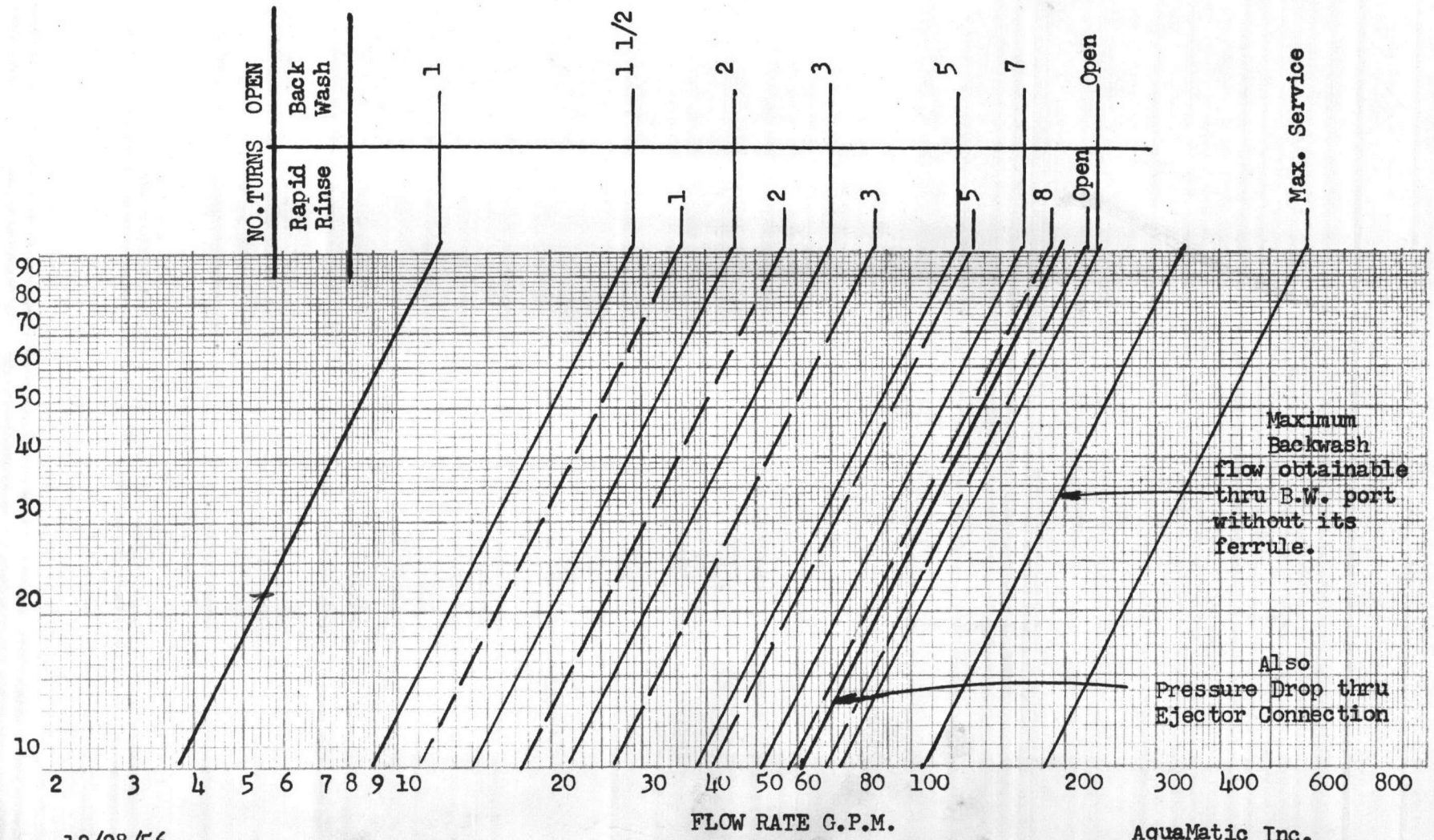

12/28/56

AquaMatic Inc.
Rockford, Illinois

SHEET 471

4552-2505
10-12-64

AUTOMATIC BYPASS PROPORTIONER

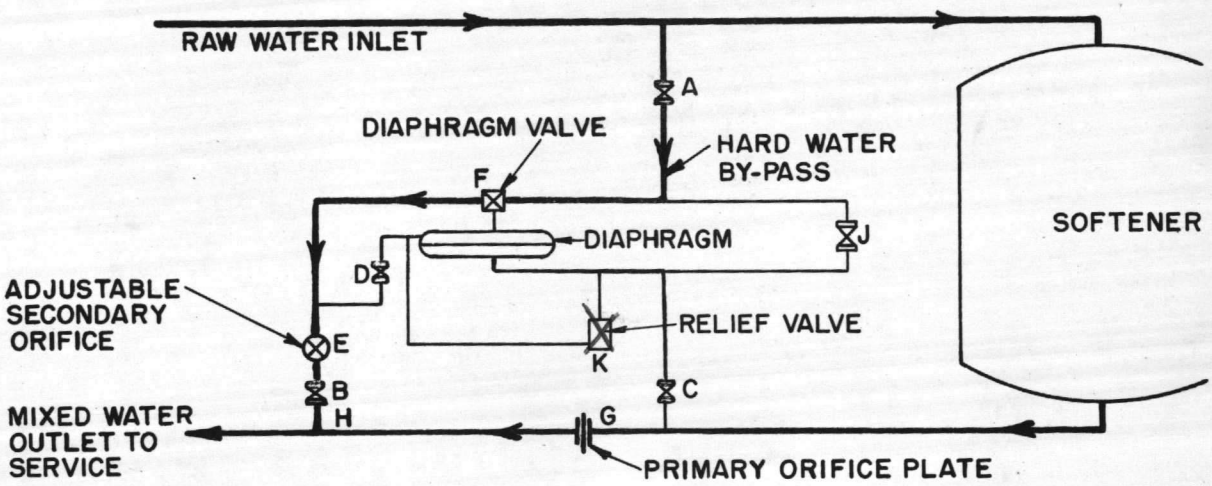

C-87295

METHOD OF OPERATION

The primary orifice and the secondary orifice have orifice areas proportional to the desired rates of flow. Diaphragm operated valve (F) reduces the pressure in the bypass until the pressure just ahead of secondary orifice (E) equals pressure ahead of primary orifice (G). Any variation in the pressure at (G) acts on the diaphragm to close or open valve (F) until pressure at G and E are equal. With a common pressure after both orifices (point H) and equalized inlet pressure, the drop in pressure through both orifices is the same, and therefore the rates of flow are in proportion to the orifice areas.

INSTALLATION

When installing the proportioner, observe the following precautions:

(1) Blow out all pipe, valves and fittings to remove scale and chips.

(2) Use good pipe compound on all male pipe threads and do not draw them up too severly.

(3) Make sure the flow through the valve body is in the same direction as indicated by the arrow on the casting.

START-UP

Follow these instructions carefully. The valves should be opened and closed slowly in the sequence given below in order to avoid damage to the main diaphragm.

(1) Close valves (C) and (D).

(2) *Slowly* open valves (A) and (B) and adjust secondary orifice valve (E) to pass the approximate flow required.

(3) *Slowly* open valves (C) and (D) at the same time.

OPERATION

With all valves open adjust the secondary orifice valve (E) until the desired blended water quality is obtained in the service water line.

To bypass during regeneration of softener, close valve C and open valve J.

TAB PLACEMENT HERE

DESCRIPTION:

3

☐ Tab page did not contain hand written information

☑ Tab page contained hand written information
*Scanned as next image

3.0 FILTRATION

Filtration is a means of clarifying moderately turbid waters. The suspended matter is filtered from the water by passing it through a medium such as a bed of graded sand or anthractie. The particles of suspended matter of a size too large to pass through the small spaces between the filtering medium is retained by a straining or screening action. The particles of a small size capable of passing through the small space between the porous screen is retained when the larger particles collect on the filtering surface forming a mat which itself acts as a type of filtering material on top of the filtering surface.

If the turbidity of the water is in excess of 50 ppm or it is colloidal in dimension and too small to be removed by straining or frictional resistance, the water should be treated by coagulation and most of the suspended matter removed by settling in a sedimentation tank preceding the filters.

Many materials are used for the filtering medium in the process of water filtration and their uses are generally governed by each application. Anthracite and sand are predominant in the majority of industrial installations of pressure filters, sand being primarily used for cold water and anthracite for hot water. Anthracite is used for hot water, generally regarded as above 125° because the hot water has a tendency to absorb silica from the sand, (especially when it is alkaline).

As the accumulation of solids on top of the filter surface increases, the frictional resistance of water passing through the mat and bed will increase. When the resistance, usually referred to as a pressure drop, builds up to a limiting value, the filter must be "backwashed" to clean the accumulation from the filtering surface. This is done by reversing the flow of water at an increased controlled rate. This backwashing washes out the suspended matter from between the filter bed particles to the top of the filter and then to waste by expanding the filter bed and releasing the suspended particles. If the filter is used for hot water service, the backwash water is returned to the sedimentation tank.

3.0 SODIUM ZEOLITE SOFTENING

3.1 WHAT IS SODIUM ZEOLITE SOFTENING

A hard water is a water containing dissolved salts of calcium and magnesium. The water dissolves these salts in flowing over limestone, gypsum, dolomite and other mineral deposits containing them.

If used for boiler feed or in hot water piping, a hard water will cause scale to form since most calcium and magnesium salts are less soluble at high temperatures than at normal temperatures.

Sodium salts are not hard scale forming, so that waters containing only sodium salts are called soft waters. To convert a hard water to a soft water the calcium and magnesium salts are removed or changed to sodium salts.

In the sodium zeolite softener the hard water flows through the bed of ion exchange (zeolite) material which causes the calcium and magnesium ions (dissolved salts) in the hard water to be exchanged for sodium ions, so that the treated water is then a soft water.

3.2 CHEMISTRY OF SODIUM ZEOLITE SOFTENING

The softening process may be illustrated by the following reactions.

$Ca(HCO_3)_2$	+	2NaZ		CaZ_2	+	$2\ NaHCO_3$
Calcium Bicarbonate		Sodium Zeolite		Calcium Zeolite		Sodium Bicarbonate
$MgSO_4$	+	2NaZ		MgZ_2	+	Na_2SO_4
Magnesium Sulfate		Sodium Zeolite		Magnesium Zeolite		Sodium Sulfate

The letter Z represents the zeolite material.

Obviously this softening process can continue only as long as the zeolite material can supply sodium to replace the calcium and magnesium in the raw water. Like the electric storage battery, the zeolite bed must be regenerated at certain intervals to replenish the sodium in the zeolite bed.

When the zeolite bed is no longer capable of softening, the sodium zeolite having been converted to calcium and magnesium zeolite, it must be returned to its original state by regeneration with dilute brine. Exhaustion of the zeolite bed is indicated by the gradual appearance of hardness in the effluent.

The regeneration process is indicated by the following reaction:

2 NaCl	+	CaZ_2		2NaZ	+	$CaCl_2$
2 NaCl	+	MgZ_2		2NaZ	+	$MgCl_2$
Sodium Chloride (Salt Brine)		Calcium & Magnesium Zeolites		Sodium Zeolite		Calcium & Magnesium Chlorides

The salt brine passes through the zeolite bed exchanging its sodium ions for the calcium and magnesium ions on the zeolite. The zeolite is returned to the sodium zeolite form for repeated use, while the spent brine containing the calcium and magnesium is rinsed from the bed and sent to waste.

3.3 INLET WATER QUALITY

Because the ion exchange materials must be kept clean to function efficiently, the water to be treated must be free of suspended matter, oil, algae, slime and other impurities that would collect on the zeolite particles and reduce their capacity for hardness removal. Certain waters may require coagulation or filtration before the zeolite softening. Waters that are pretreated in hot process softeners or solids contact reactors should be filtered before zeolite softening. Zeolite units can act as filters, but the softening ability and capacity will suffer, and the zeolite bed may then require frequent cleaning or replacement.

Although the zeolite will remove iron, the iron content of the influent must be in the ferrous form and must not be allowed to oxidize to the ferric form. Therefore, well water containing such ferrous irons should not be exposed to air in storage tanks or by meeting air sucked in by pumps before the zeolite. The well water should go directly through the sodium zeolite unit under pressure. If the iron is ferric it will coat the zeolite, and should therefore be filtered through sand filters ahead of the zeolite.

3.4 CAPACITY BETWEEN REGENERATIONS

The capacity of the zeolite for softening water will vary with the type and will also depend upon the amount of salt used for regeneration. The unit of measurement of capacity is the "grain" or the "kilograin" which equals 1000 grains. Unit of water hardness measurement is "grains per gallon as calcium carbonate".

1 grain per gallon (gpg or gr/gal)	=	17.1 ppm (parts per million)
1 Kilograin (Kgr)	=	1000 grains
7000 grains	=	One pound

The Operation Data Sheet gives the capacity of the zeolite softener in Kilograins (Kgr.). This value will not change greatly if the specified amount of salt is used for regeneration. The capacity is also given in "gallons treated" based on the inlet water hardness specified.

$$\frac{\text{Gallons x grain/gallon}}{1000} = \text{Kilograins}$$

Gallons treated x water hardness = Capacity

The influent water hardness may vary considerably during the year with an inverse effect on the gallon capacity. Higher hardness will mean less water treated between regenerations. The gallon capacity can be calculated from the formula below:

$$\text{Gallons treated per regeneration} = \frac{\text{Kgr. Capacity x 1000}}{\text{gr/gal. hardness}}$$

For measurement of influent water hardness, use the APHA method given on a later page.

3.5 TREATED WATER QUALITY

The treated water will be soft as measured by a standard B & B (Boutron and Boudet) soap test. The test requires that no more than 5 drops of the standard soap solution be needed to form a permanent lather (lasting 5 minutes without a break) in a 40 ml sample. This is considered as "zero hardness", although other test methods may indicate that a few ppm of hardness are still present.

Immediately after regeneration of the softener, the zeolite is rinsed with influent water to remove excess salt. The hardness removed from the zeolite in regeneration also rinses from the unit at this time. When the hardness of the rinse water is "zero" the rinse can be ended. The chlorides in the effluent at the end of this rinse will be slightly greater than influent chlorides but not appreciably so for the usual application.

After the rinse is ended and the softener run is started the treated water hardness will continue to drop as the water is used, eventually reaching a point of very low hardness requiring 2 to 3 drops of B & B soap solution to make a lather with 40 ml of softened water. Towards the end of the service run, as the available capacity of the unit is used up some hardness will begin to leak through the zeolite. The water will be acceptable for most uses until the leakage of hardness has increased to the 5 drop value "the end point" of the service run. The capacity of the zeolite material has been calculated for the 5 drop end point. If a 3 drop end point is used instead of 5 drops, the capacity will be reduced by 10%.

If the service run is continued beyond the 5 drop end point, the zeolite may become over exhausted. The service run which follows may thus be shorter than normal, or the quality of the treated water may be poorer than standard unless a larger than normal amount of salt is used for regeneration. The ratio of pounds of salt to kilograins capacity used should not be reduced below normal to maintain good treated water quality. In general the greater the amount of salt used per Kgr of hardness removed, the better the effluent quality.

3.6 SALT FOR REGENERATION

The salt used should be clean, coarse salt. Pea sized salt is preferred, although sizes down to a rice size may be used. Either rock salt or evaporated salt may be used, but in either case the salt should contain more than 98% sodium chloride. Rock salts should be examined carefully for dirt. Evaporated salt should be used in nugget form.

COCHRANE ION EXCHANGE *(ZEOLITE)* EQUIPMENT

LOG SHEET FOR SODIUM ZEOLITE SOFTENER

S.O. _____ *Unit No.* _____ *Date* _____

	Time	*Pressure*	_____
1. Start Backwash.....			
2.			
3.			
4. Stop Backwash			

5. Brine depth in measuring tank ..... _____

	Time	*Brine Depth*	*Pressure*	*Brine % in*	*Brine % Out*	_____
6. Start Brine Draw						
7.						
8.						
9.						
10.						
11.						
12.						
13.						
14.						
15.						
16. End Brine Displacement						

(Note above when Brine Draw was ended. Sample every 5 minutes during Brine Draw and Displacement)

	Time	*Pressure*	*Meter*	*Hardness*	*Chloride*	_____
17. Start Rinse (Sample every 10 min.) (Note below when rinse is ended)....						
18.						
19.						
20.						
21.						
22.						

COCHRANE ION EXCHANGE *(ZEOLITE)* EQUIPMENT

	Time	*Pressure*	*Meter*	*Hardness*	*Chloride*	
23.						
24.						
25.						
26.						
27.						
28.						
29.						
30.						
31.						
32.						
33.						
34.						
35.						
36.						
37.						
38.						
39.						
40.						
41.						
42.						
43.						
44.						
45.						
46.						
47.						
48.						

Sample every 30 minutes during Service Run (Note above when Service Run was discontinued)

4552.301-4
4-29-53

DETERMINATION OF HARDNESS

TEST FOR SOFT WATER (B & B SOAP TEST)

This method is designed only to indicate whether the water tested is suitable for use.

Test Kit Cat. No. 43822-21

Apparatus required:

1-Shaking bottle, calibrated at 40 ml.
1-Dropping type bottle

Indicator required:

Soap Indicator, Spec. IV-C-2 (Boutron and Boudet soap)

Procedure:

1. Rinse the shaking bottle thoroughly with the water to be tested.

2. Fill the shaking bottle to the calibration mark with the water to be tested.

3. Add soap indicator solution to the shaking bottle and replace the stopper.

   Use 5 drops from the dropping type bottle, or use 0.15 ml. (If 25 ml. sample is used, use 3 drops or 0.09 ml.)

4. Shake the bottle vigorously. If a heavy lather appears, the water is probably soft. If there is no lather, the water is hard.

5. Lay the bottle on its side. If no break appears in the lather for 5 minutes, the water is soft. If the lather breaks, the water is just slightly hard.

NOTE:

The water to be tested must be neutral. If the water is acidic (contains FMA), add 2-3 drops of phenolphthalein. Add sodium hydroxide solution to the sample until a pink color just appears, then run the soap test described above.

APHA SOAP TITRATION FOR TOTAL HARDNESS

The soap titration is a quantitative determination of the total hardness, used where close control of equipment operation is required.

Apparatus:

1-Automatic burette (10 ml.) and bottle assembly
1-Shaking bottle, 8 oz. (calibrated at 50 ml.)

Reagents:

Soap Solution - Spec. IV-C-1.

Procedure:

1. Using the graduated shaking bottle, measure a 50 ml. sample of the water to be tested.

*2. Add 2 or 3 drops of phenolphthalein indicator to the sample.

3. If the sample turns pink, add sulfuric acid solution until the pink color just disappears (the phenolphthalein end point). If the sample remains colorless, the acid is not required.

4. If the sample contains free mineral acidity (FMA), add sodium hydroxide solution until the pink color just appears and remains for one minute (the phenolphthalein endpoint).

   The water contains FMA if it turns red when methyl orange indicator is added.

5. Fill the automatic burette to the zero mark with soap solution.

6. Determine the Lather Factor (LF) as indicated on the label of the soap solution bottle.
   From the burette add soap solution equivalent to the Lather Factor.

7. Replace the stopper in the shaking bottle and vigorously shake the sample for ten seconds.

8. Continue the addition of the soap solution from the burette in 0.2 - 0.3 ml. increments, vigorously shaking the sample for ten seconds after each addition, until a lather is formed which will persist for 5 minutes. Lather is considered persistent when it covers the entire exposed surface of the water with the shaking bottle lying on its side.

9. Record the final burette reading (ml.).

10. Add 0.3 to 0.5 ml. of soap solution to the sample, stopper the bottle, and vigorously shake the sample for ten seconds. If a voluminous lather that persists for at least five minutes if formed, the final endpoint has been reached. If the lather does not persist for five minutes, the previous endpoint was a false or "ghost point" and the titration must be continued with 0.2 to 0.3 ml. additions of soap solution to the sample, vigorous shaking, and observance of the persistency of the lather formed. When a lather is formed which will persist for five minutes, the final endpoint has been reached.

11. Record the burette reading at the final endpoint (ml.).

12. From the final burette reading subtract the lather factor as indicated on the label of the soap solution reagent bottle. This difference is the volume of soap solution required to titrate the hardness in a 50 ml. sample.

13. The total hardness (ppm as $CaCO_3$) is equal to the volume of soap solution required to titrate the hardness in a 50 ml. sample multiplied by 20.

$$TH = (ml. - L.F.) \times 20$$

Where: TH = Total Hardness, ppm as $CaCO_3$
ml. = Final burette reading
L.F. = Lather Factor

The hardness as normally determined is reported as ppm hardness as $CaCO_3$. The soap solution (0.02N) has been standardized on the basis that 1 ml. of soap solution in 50 ml. of sample represents a hardness of 20 ppm as $CaCO_3$.

High Hardness Measurement

If the volume of soap solution used exceeds 5.0 ml., use a 25 ml. sample diluted with 25 ml. of distilled water. The total hardness is then equal to the volume of soap solution required to titrate the hardness multiplied by 40.

Whenever dilution of the sample is required, the hardness is indicated by the following formula:

$$TH = (ml.\ soap - L.F.) \times \frac{1000}{S.V.}$$

Where:

TH = Hardness, ppm as $CaCO_3$.

ml. = Final burette reading.

L.F. = Lather factor for the soap.

S.V. = Sample volume, actual volume in ml. of original sample which was diluted to 50 ml. If no dilution is required, S.V. = 50.

*Steps 2 to 5 are not required for determining the effluent from a sodium zeolite softener.

TAB PLACEMENT HERE

DESCRIPTION:

4

☐ Tab page did not contain hand written information

☑ Tab page contained hand written information
*Scanned as next image

PRINTED IN U. S. A. BY BUCHAN LOOSE LEAF RECORDS CO., CLIFTON HEIGHTS, PA. 820971

4.0 EQUIPMENT INSTALLATION, OPERATION AND MAINTENANCE - PRESSURE FILTER

4.1 EQUIPMENT

The equipment is illustrated on assembly drawings which are furnished under separate cover. Basically the equipment consists of:

(a) Tank containing upper water inlet distributor or backwash collector and the bottom underdrain for water collection.

(b) Filter bed of fine graded sand anthracite or other material, with supporting bed of coarse sand and graded gravel or equivalent sizes of graded anthracite.

(c) External piping with nest of gate valves for operation, or single control valves such as the Solo valve or Hydromatic valve which simplify operation by performing all the functions of the valve nest by the operation of a single lever.

4.2 OPERATION

Valve operations are described in the Operator's Instructions (Section 2.2). A valve chart is provided for valve nest filters. Simple instructions are provided for Solo Valves or Hydromatic Valves, if furnished, and maintenance is discussed elsewhere in this manual.

4.21 Filtering

With the filter in service, water enters at the top of the tank, passes down through the bed and the bed support, and leaves the tank through the underdrain.

Normal flow rate for sand or anthracite filter beds is 3 gpm per square foot of filter area. (In some states the rate is limited by State Regulation to 2 gpm per sq. ft. when the filtered water will be used for drinking purposes). Where two or more filters are run in parallel, a peak flow up to 50% overload (4.5 gpm per sq. ft.) is allowed for short periods. Double unit plants are normally operated with one unit taking the full load while the other is being backwashed. The units are sized so that the 50% overload maximum is not exceeded.

As suspended solid matter in the water filters out on the top of the bed, a mat forms which creates a resistance to the flow of water. This resistance is measured as a pressure drop from inlet to outlet. As flow continues, the pressure drop increases. The normal limiting pressure drop is 12 ft. or 5 psi at a normal flow rate of 3 gpm per sq. ft. of filter area. When this limit is reached, the filter should be backwashed.

Where a single control valve is furnished, the pressure drop limit should be increased to allow for pressure loss through the valve itself.

When filters are used with water containing very little suspended matter, or when they are operated considerably below their rated flow it might be several days before the maximum pressure drop is reached. *It is recommended that wherever practical the filters always be backwashed once every 24 hours* regardless of load conditions or pressure drop.

4.22 Backwashing

When the filter valves are arranged for backwash, water enters the filter tank through the underdrain, passes up through the bed, and leaves the tank through the upper distributor. The upward flow expands the bed and agitates and cleans the particles of filtering material.

In order to prevent loss of material out the top of the tank, a backwash rate control is furnished. This is usually an open orifice discharging to the sewer, or a closed orifice where the backwash waste water is returned to a clarifier or hot process sedimentation tank. Where a Solo valve is used, the rate is controlled by adjustment of the inlet pressure. Some systems use a pressure regulating valve before the orifice, or a float operated valve, such as a butterfly valve with the float operating behind a weir in the sump. The rates are usually measured by the pressure drop across the controlling orifice, or by a separate rate of flow indicator. The system used is shown on the drawings and discussed elsewhere in these instructions.

The proper backwash rates and control indications are given in the Operation Data. For sand filters the backwash rate will vary from 12 to 15 gpm per sq. ft. of filter area. For cold process anthracite filters the rate will be 10 to 12 gpm per sq. ft., and hot process anthracite filters the rate will be 12 to 14 gpm per sq. ft. Activated carbon will require 3 to 6 gpm per sq. ft.

In practice, the proper rate will vary with water temperature and with the effective size of the filter bed material. For example, a very fine sand will be backwashed at a lower rate than a coarser sand. If the water is warm, as during the summer months, a higher backwash rate is required to expand the bed. If the water is cold, the rate must be lower to avoid washing out the filter bed. The rate should be high enough to remove all dirt, but not wash out the filter bed.

When starting or ending the backwash of a filter, the backwash outlet valve must be opened and closed slowly. *Allow 2 to 5 minutes to arrive at the required rate* and to close the backwash valve after backwashing. This is important to avoid disturbance and upset of the filtering and supporting beds.

If the waste water is still not almost as clear as the inlet water after 5 to 10 minutes, continue the backwash. If the supply of backwash water is limited by the capacity of a storage tank, stop backwashing after the allotted time to allow the tank to refill. In this case, backwashing at more frequent intervals will prevent the filter from becoming too dirty and less backwash water will be used.

Where the waste water is returned to a clarifier or hot process sedimentation tank without storage compartments, stop backwashing after the allotted time and allow at least 30 minutes for the water in the sedimentation tank to settle back to normal before backwashing the filter again or before backwashing another filter.

If the filter bed remains fouled after backwash, the filtered water may not be as clear as desired. The backwash rate must be increased to the maximum possible, and the filter backwashed more often to clean the bed. If the bed cannot be cleaned by backwashing, pretreatment of the water may be necessary or an existing treatment may need improvement.

4.23 Rinsing

After backwash, a short rinse is sometimes desirable to remove the backwash water from the filter tank and reform the mat of suspended particles on the filter surface. The water is passed down through the filter bed as in service, but the filtered water is sent to waste until it has the desired quality.

In some filter plants the rinse is eliminated either because the backwash inlet water is filtered water, or because the normal filter inlet water forms its mat quickly and the run of turbid water is small as compared to a long filter run.

4.3 ERECTING THE FILTER

4.31 Setting Up The Unit

Transportation facilities permitting, the shell of the filter will be shipped in one piece after hydrostatic test. Unload the shell carefully and place it on a suitable foundation. Slings, blocks and handling rigging must be carefully placed. The piping, valves, and accessory parts are shipped separate, boxed or crated as necessary.

Suitable foundations must be provided for supporting the filter. Drawings supplied give dimensions of the supports and total weight of the filter on the foundations (including filter medium, supporting bed material, and water).

Level the filters carefully. Make certain that the faces of the inlet and outlet openings of all filters are in line, and all flanged faces are parallel.

Complete the piping (including single control valves, loss of head gauges, and other accessories) in accordance with the assembly drawings provided.

If the backwash water discharges into an open funnel or sump connecting to the sewer, the sewer piping must be of sufficient size and slope to handle the total volume of backwash water in addition to the normal volume of water handled by the sewer with the available head figured from the top of the open funnel or sump.

Occasionally the outlet piping leading to the sewer is a closed system, using the backwash water pressure for carrying away the wash water. In these cases, check the sewer size carefully to be sure it will be able to handle the backwash flow and pressure in addition to the volume normally handled. These closed systems however should be avoided wherever possible.

Flush out the inlet water line before connecting it to the filter.

4.32 Underdrain System

Where the underdrain is shipped in place, as in units provided with a radial slot type diffuser plate, examine the diffuser plate to make sure that it is properly centered and firmly held in place. If the piece is shipped separately, install as shown on the drawings, making sure it is centered and held down firmly. Be sure that all slots and openings are clear and that no dirt, tools etc. have been left in the bottom of the tank. Tanks less than 36" diameter will usually have a slotted diffuser attached to the outlet pipe. See that this piece is centered and held firmly and that all slots are clean and open.

In units where a manifold and lateral type underdrain is furnished, drawings are supplied to show installation of the parts. Where strainers and concrete subfull are required, detailed instructions are furnished. It is important in every case that the laterals themselves be horizontal, i.e. do not permit the laterals on one side of the manifold to project upward and those on the other side to project downward.

Be sure that all pieces are properly located and firmly held in place before loading the unit.

4.33 Loading the Filter Tank

The bottom main tank piping and the valves should be installed by this time. Flush the tank thoroughly to eliminate all metal pieces, dirt, scale, etc.

Add the four or five grades of bed support and filtering material to the tank, one layer at a time. Note that the coarsest grade is on the bottom and the upper layers are successively finer. Unless concrete is used, enough of the coarse grade is supplied to fill the bottom head. Grading and depth are given on the installation drawing. Add the material carefully by lowering it into the tank to avoid breaking and chipping. If neccessary to drop the material, use 12" of water as a cushion.

Each layer must be levelled carefully before the next layer is installed. The easiest way to level each of these layers is as follows:

(a) Mark with chalk in several places around the inside of the tank the height to which each layer will come.

(b) Add each layer and carefully level it up to the chalk marks. If desired, admit water slowly through the bottom of the tank to check whether the layers are level.

If the amount of anthracite or sand and gravel provided is not sufficient to load the unit as shown on the drawing and explained above, do not proceed further. Either obtain the necessary fill of graded anthracite or gravel and sand locally, or consult Cochrane's Representative or Service Department.

If the filter is not provided with a manhole of at least 11" x 15" in size load all layers except the top filtering layer through the lower handhole in the shell, replace the handhole cover, then load the top layer or filtering grade through the filling plug in the top head.

After the support bed of an activated carbon filter has been loaded the tank should be half filled with water and the carbon poured into the water. *Allow the activated carbon to soak for at least 24 hours before backwashing* to wet the carbon and release the air in the particles.

4.4 START UP

4.41 Filling the Filter

To fill the filter tank with water, put the valves in backwash position but with the inlet valve closed. Open the vent valve. Slowly let water into the bottom of the filter by

cracking open the inlet valve in the backwash water supply line. Ten minutes or more should be required to fill the tank in order to displace all of the air in the filtering material and to prevent upsetting the bed. When the filter has been filled, as shown by a steady stream of water flowing from the open vent, close the vent valve.

If the filter material is anthracite, continue to let the water flow to waste with the valves in backwash position *at the slow filling rate* for 15 minutes after closing the vent to remove any trapped air.

4.42 Initial Backwash

When the tank is full, open the backwash inlet valve very slowly until the full backwash rate is reached. Backwash until the waste water is almost as clear as the inlet water.

The purpose of the initial backwash is to rid the bed of any air or gas bubbles and to clean and classify the filtering material.

The filter may now be rinsed and put into service.

4.43 Hot Water Systems

The procedure for the initial filling given in paragraph 4.41 may be used *only when the filters are first installed*. In this case cold water is drawn by gravity from the hot process softener. The units are then brought up to temperature when the softener is started up by setting the inlet and outlet valves in the "Service" position and passing the water to the sewer. After the proper temperature is obtained the filters are backwashed to the sedimentation tank, then returned to the service position. The system is now ready to provide treated water.

Hot water system filters should be shut down *ONLY WHEN ABSOLUTELY NECESSARY*. If it is necessary to drain the unit, extreme care must be exercised to prevent flashing and upsetting the bed. To drain and refill one unit the following procedure should be followed:

To Drain

(a) Backwash the filter in accord with the normal procedure.

(b) Close all valves tightly to isolate the unit.

(c) Slowly open the outlet drain valve *one or two turns*. Allow the filter to drain until no more water comes out, then open the vent valve on the top of the unit and permit the remaining water to drain out.

(d) Cool the filter by connecting a cold water hose to the drain connection. *Slowly* admit cold water until it flows out the vent in the top head.

(e) Close and disconnect the cold water hose. Remove the top head access opening cover and drain the unit until the water level is just below the top of filtering material. If the bed is to be replaced, drain the remaining water from the unit.

To Refill

(a) Replace the top access opening cover and close the drain valve. Be sure the vent valve on the top of the unit is open.

(b) Open the hot water inlet valve *one or two turns*. Admit hot water *slowly* so as not to disturb the filtering bed and to permit the air to escape out of the vent.

(c) When water starts to flow from the vent, the filter is full. Close the hot water inlet and the vent.

(d) Open the backwash *inlet* valve wide, then *slowly* open the backwash *outlet valve two or three turns*. Allow the unit to backwash at about one half the normal rate (less than 1/4 the normal pressure drop) for 5 minutes to displace any trapped air.

(e) Gradually open the backwash outlet valve until the full rate is reached. Give the filter a normal backwash and return it to serviced.

4.5 REPAIR AND REPLACEMENT ORDERS

Repair and replacements can be handled more efficiently if the following procedure is used.

(a) Address all correspondence to our

"Parts Department".

(b) Give the Cochrane shop order number as it appears on the nameplate of the equipment.

(c) Designate the names of the parts required by referring to the assembly drawing of the unit.

(d) Specify the quantity of each part required.

(e) Give complete shipping instructions.

(f) In returning parts to the Cochrane Factory, be sure that each part is tagged with all information necessary for complete identification.

INSTALLATION OF HEADER-LATERAL UNDERDRAIN WITH STRAINERS

HEADER AND LATERALS

Install the header and laterals as shown on the drawings. The header should be firmly held in place and the laterals screwed into the tapped openings or crosses. Make certain that the tapped holes in the laterals face directly upward and the laterals are level.

STRAINERS

Screw the strainers into the tapped holes in the laterals and manifold and turn them tight with a wrench. All strainers should be vertical with outlet ports in a horizontal plane. There should be a strainer in every tapped hole.

CONCRETE FILL

Concrete is required to fill the bottom head of the tank and all the dead space around the laterals up to the lip of the strainers. Liquon strainers must be wrapped with the plastic tape supplied before any concrete is put into the tank.

Lifting head strainers are supplied with metal covers, which must be placed over the strainers before concreting. Press the cover down until it holds firmly on the strainer. After all the strainers are in place and covered, fill the bottom of the tank with 1:3:6 concrete, spading to fill all holes. Bring the concrete up to the level of the bottom of the hex portion of a Liquon type strainer, or up to the shoulder below the opening of a lifting head strainer as shown. The last inch should be added carefully and trowelled to a smooth finish.

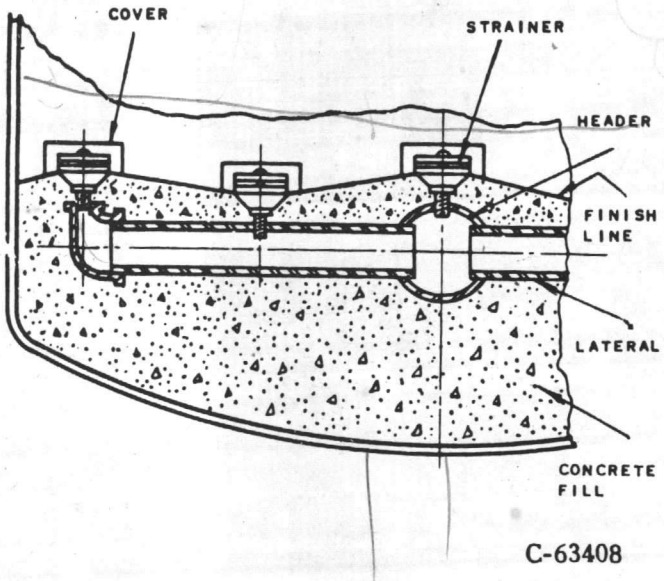

COCHRANE LIFTING-HEAD STRAINERS

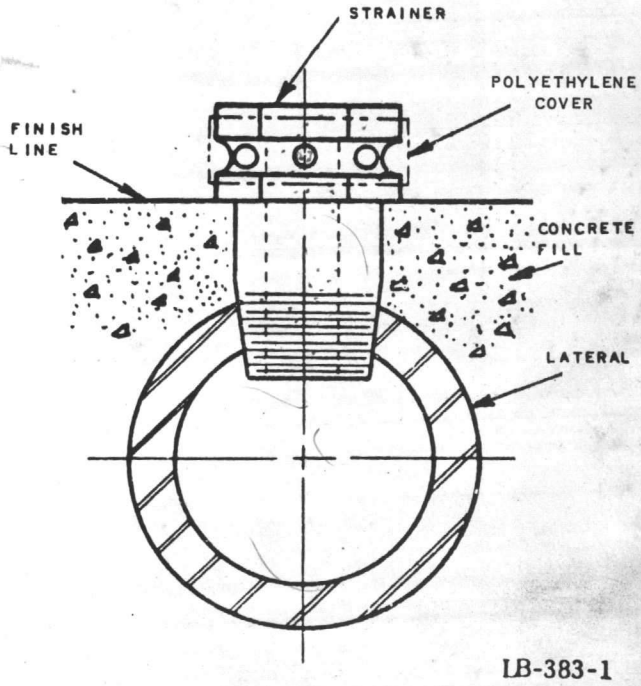

LIQUON FIXED ORIFICE STRAINER

Do not use cinder cement because it may corrode the tank. Crushed stone or gravel are suitable. Do not use the graded gravel which may have been shipped with the unit.

When the concrete has set, *remove* the plastic tape or metal covers from *all* of the strainers. Examine the strainers and clear any holes that may have been plugged. Remove all stray bits of concrete, and clean the bottom of the tank.

Suggestion:

(1) Count the strainers when they are installed.

(2) Count the covers when they are put on the strainers.

(3) Count the covers when they are removed.

All three tallies must be the same.

4.0 EQUIPMENT INSTALLATION, OPERATION, AND MAINTENANCE ZEOMATIC SOFTENER MODELS 54-60

4.1 EQUIPMENT

The equipment is illustrated on assembly drawings which are included in this manual.

Two types of zeo-matic systems are available, Type "A" and Type "B". The type "A" system is a standard unit, while the type "B" unit is a standard exchange tank with oversize piping for operation at higher flow rates or lower pressure drop conditions.

The regeneration of the type "A" or "B" units is the same and is carried out at normal flow rates.

Zeo-flo exchange units are provided with Solo valves which provide four positions; (1) Backwash, (2) Regenerate, (3) Rinse, (4) Service.

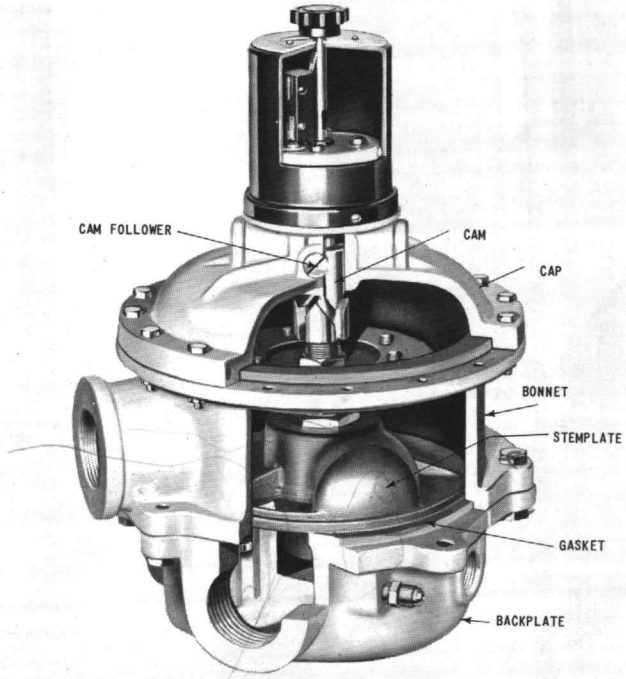

CUTAWAY OF A 305 SOLOMATIC VALVE

Solomatic valves provided will be the "305" series valves.

The units are equipped with diaphragm operated valves which are automatically closed during all steps of the regeneration. This prevents by-passing of raw water to service.

In the service position the by-pass valves are open to allow water to pass through the zeolite bed without having to go through the solo valve resulting in a lower pressure drop across the system.

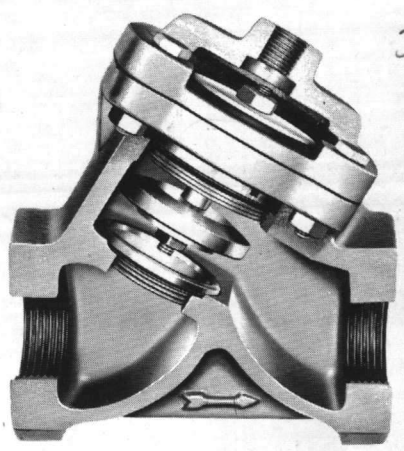

AQUAMATIC DIAPHRAGM VALVE

For limiting the-backwash rate, an adjustable nozzle is built into the solo valve. This should be adjusted to provide the proper backwash rate.

The brining rate of flow is controlled by the Gate Valve upstream of the eductor. This valve should be adjusted so the correct depth of brine will be drawn from the brine tank in the time shown in the Operation Data.

For limiting the Rinse Rate, an adjustable Nozzle is built into the Solo Valve. This should be adjusted to provide the proper backwash rate.

4.2 OPERATION

4.21 Service

With the Solomatic valve in the service position the diaphragm bypass valves are open so that inlet water is diverted to enter the top of the unit. The water passes downflow through the zeolite bed. Treated water from the bottom of the tank passes out to service through the diaphragm bypass valve.

The service run continues until the treated

water is no longer satisfactory (as discussed in Section 3), or until a meter indicates that the capacity between regenerations noted in Operation Data has been treated.

Class 1 units are regenerated on a time basis. The control timer removes the unit from service and starts a regeneration depending on the setting made on the timer.

The maximum flow rate indicated in the Operation Data is a practical maximum for the unit, and should not be exceeded for longer than 2 hours in any one service run. Peak flows up to 25% over-load are allowed for short periods. Higher flow rates may cause poor operation of the unit. Double unit plants are normally operated with one unit taking the full load while the other is being regenerated.

The units are sized so that the 25% overload maximum is not exceeded.

When the service run is ended, the unit must be regenerated by the following procedure.

1. Backwash to remove dirt.
2. Brine and slow Rinse to regenerate zeolite.
3. Rinse bed free of excess brine.

4.22 Backwashing

When the Solomatic valve is in the backwashing position (Wash - 1) the stem plate is seated so that the inlet water is diverted to the bottom connection. The water passes upflow, through the zeolite bed, and re-enters the solomatic valve top connection which is open (through an adjustable orifice) to the drain. The backwash water thus passes through the Solomatic Valve to waste.

The backwash nozzle should be adjusted to pass the proper backwash flow rate, for the pressure that will normally be imposed on the unit.

The backwash rate should be high enough to wash out all dirt and a small amount of very fine zeolites, but not high enough to cause large amounts (handfuls) of coarse zeolite to come over. An excessive rate may result in loss of exchange material and unit capacity. Insufficient backwash will, in time, cause the bed to become dirty, with resultant loss of capacity and quality, and excessible pressure losses.

When first adjusting the backwash rate, start with the adjustable nozzle closed. Slowly open the nozzle until the proper flow rate is reached. If zeolite grains come over in handful quantity, immediately reduce the flow. If no zeolite appears at all after 5 minutes of backwash, increase the flow. Continue to adjust the rate until a few grains of zeolite appear continually in the waste water.

The backwash should be continued until the waste water is as clear as the inlet water. A minimum of 10 minutes should be allowed for backwash.

4.23 Brine Injection

When the Solomatic valve is in the regeneration position (Brine - 2), inlet water is diverted through the Solomatic Valve to an enternal eductor. Water from the jet passes through a suction chamber, past a combining throat and is discharged into the piping leading to the top of the tank. The eductor pressure water, plus the brine drawn into the suction chamber by the eductor action flows downward through the zeolite bed and is discharged from the bottom of the tank. The brine and pressure water re-enters the solo valve through the bottom connection and is diverted to the drain connection.

To obtain the proper eductor action it is essential the supply pressure be a minimum of 40 p.s.i. To obtain the proper strength of brine for regeneration of the zeolite, adjust the gate valve ahead of the eductor to provide the flow rate shown in the Operation Data.

Improper operation of the eductor due to a supply pressure widely different (10-20 psi) from the indicated pressure required will result in inefficient regeneration of the unit with a resultant reduction in capacity.

Adjust the brine suction valve so that the proper amount of brine is drawn in the time indicated in the Operation Data.

4.24 Slow Rinse

With the solomatic valve on the exchange

unit in the normal position, which is service, and the brine tank filled to the high level, the suction and refill valves on the brine tank will be open.

When the solomatic valve moves from the service position pressure water is taken from the solomatic valve and placed on the controller and on the brine tank refill valve. This pressure causes the brine tank refill to close.

On multiple units, shuttle valves are installed in the tubing so that the pressure water from the solomatic valve on one unit will not pass through the controller or the refill valve back into the other units.

When brine is being drawn from the tank the float tends to follow the level of the brine down until it trips the lower stop on the brine float rod, causing the controller to trip. When the controller trips, it applies the pressure water from the controller to the valve in the brine suction line closing it.

With the brine suction valve closed, plain water passes through the eductor and through the exchange bed and slowly displaces the brine from the bed for the time shown in the Operation Data.

At the end of regeneration, when the unit has been rinsed and returned to service the pressure water placed on the controller and refill valve is removed allowing the refill valve and the brine suction valve to open.

4.25 Rinse

When the solo valve is in the rinse position (Rinse -3), water enters the top of the tank through a fixed orifice in the solomatic valve, passes downward through the bed and is discharged from the bottom of the tank. The rinse water re-enters the solomatic valve and is diverted to waste.

The Rinse Adjustable Nozzle should be adjusted to provide the flow rate shown in the Operation Data.

4.26 Returning To Service

The water going to waste will contain excess brine. Taste the water 10 minutes after the start of rinse. If the water is no longer salty, the unit can be returned to service. If the water is salty, continue the rinse, tasting at 5-10 minute intervals. The final rinse waste water should be soft by Soap Test. The fast rinse time given on the Data Sheet, is an approximate value for the time required. If operating experience indicates a shorter or longer rinse period is required, the timer should be adjusted accordingly.

4.27 Brine Tank

The salt used should be clean, coarse rock salt or nuggets of evaporated salt. Pea sized is preferred. Do not use salt finer than rice size. The tank will require more frequent cleaning if the salt is dirty.

The level of solid salt in the brine tank should not be allowed to fall more than 30 inches below the top of the tank. The best time for charging salt is immediately after brine draw when the water level is down. This will minimize splashing and avoid overflow. Add salt until the level is up to the lower brine draw indicator, then refill the tank with water.

4.28 Slow Rinse Float Controller

The brine tank should be allowed to fill to the upper level, so that the automatic refill has stopped the tank from filling any further. The upper stop on the Clayton Float Operated Controller, should be adjusted so that it will trip the controller approximately 1" before the brine has reached its highest level.

The lower stop on the float rod should be set to trip when the correct amount of brine has been drawn from the tank (See Operation Data Page).

The sensitivity of the controller should be adjusted by positioning the counter weight on its shaft, which method can also be used to make very minor corrections in the depth of brine drawn from the brine tank.

4.3 INSTALLATION

4.31 Tanks and Piping

The unit should be assembled as shown on the

drawings. Set up the tanks, and assemble valves and piping. Flush out the inlet water line before connecting to the unit.

A pressure gauge should be installed on the inlet line to the unit, *between the shut-off valve and the unit*. This gauge is an aid to efficient regeneration.

The drain piping should be led to an open funnel, sump or sewer. Do not restrict this drain line. If the sewer opens at an elevation above the unit, consult Cochrane to be sure the brine eductor will operate against the added back pressure. The sewer opening should be easily seen by the operator for checking on the backwash efficiency.

4.32 Brine Tank Supporting Bed

A supporting bed of 1/4" to 1/2" gravel is provided for installation in the brine tank to support the salt and prevent small particles of salt from being drawn into the unit.

A 6" depth of gravel should be placed gently into the bottom of the tank and levelled off.

4.33 Installing The Zeolite Material

Check to see that bottom collector pieces are firmly in place. The zeolite material is introduced through the manhole at the top of the zeolite tank. The proper amount of zeolite material called for on the data sheet is supplied with the unit. All of it should be used. Zeolite is best introduced dry, pouring it into a one foot depth of water. When the zeolite has been introduced, the manhole should be closed.

4.4 INITIAL OPERATION

4.41 Initial Filling Of Exchange Tanks

When filling the tank initially, the Solomatic Valve should be in the service position (#4), the valve in the treated water outlet line should be closed, and the vent in the top of the exchange tank should be open. Slowly open the inlet valve about 1/2 turn and admit water until the tank is full.

If the Solomatic Valve is in any of the other three positions, it should be advanced to the service position by slowly opening the inlet valve about 1/2 turn and closing off the waste line (use the palm of the hand). When sufficient pressure has built up, open and close the pilot by-pass valve as described above until the Solomatic Valve indexes to the service position (#4).

When the tank is full, the pipe plug should be replaced in the vent. The pilot by-pass valve should then be operated to index the Solomatic Valve into each position to displace any air remaining in the unit and piping.

4.42 Initial Backwash

With the Solomatic valve in the backwash position, slowly open the raw water inlet valve, 1/2 turn at a time, allowing 5 minutes between adjustments, until zeolite appears in the waste water.

The purpose of the initial backwash is to rid the exchange bed of any air or gas bubbles, wash out excessively fine zeolite, clean the bed and classify the zeolite. The time required is much longer than for a normal backwash.

Watch the waste wash water closely while increasing the backwash rate. Sample the waste water in a glass or jar, and examine the sample for zeolite particles. If large particles (coarser than 60 mesh) appear, reduce the rate slightly until they no longer appear. If large amounts of zeolite, or coarse zeolite particles continue to appear even though the rate is greatly reduced, air bubbles may be floating the material out of the unit. Put the Solomatic valve in rinse position and rinse rapidly for 5 minutes, then close the inlet valve, return to backwash position and start the backwash again.

Repeat this procedure as often as necessary until the amount of zeolite being washed over can be controlled by changing the backwash rate.

When fine zeolite particles (smaller than 60 mesh) appear, continue to backwash at a constant rate until the amount of fine particles is very small, then increase the rate.

Continue to examine samples and increase the flow rate until almost all of the fines are washed out and a small amount of coarse zeolite (60 mesh) appears continually. Then reduce the rate slightly until the coarse zeolite no longer appears.

Note the backwash rate and inlet pressure at this point for future use. The setting given in the Operation Data is an approximation of this value.

4.43 Filling Brine Tank

Set the brine draw indicator so that the upper pointer is 4" below the rim of the tank. Set the lower pointer below the upper by the distance given in the Operation Data as the Brine Draw Depth.

Add 12 inches of water over the gravel or anthracite, then load with salt up to the lower pointer.

Add water until the salt is just covered. In this initial filling, the salt will dissolve and the level will drop. Add more salt to bring the level up to the lower indicator, then fill with water. The initial filling will require approximately 200 lbs. of salt for each 10 lbs. of salt noted in the Operation Data. In addition to this amount, arrangements should be made to have a week's supply of salt on hand after the tank is filled.

4.44 Initial Regeneration

Draw the brine as described in Section 4.23, and 4.24.

Rinse the zeolite bed as directed in Section 4.25.

The unit is now ready for service.

4.5 MAINTENANCE

4.51 Storage Of Zeolite

If ion exchange material (zeolite) is to be stored out of the unit prior to installation, or for replacement, keep it in a cool, damp location. If the material is allowed to dry to a bone dry condition or allowed to freeze, excessive amounts of fines will be produced when the material is put into water for use. Soaking in brine prior to contact with water may reduce the amount of fines.

4.52 Loss Of Capacity

Should the unit capacity between regenerations be reduced below that specified on the data sheet, check the following points:

(a) Increase in exchangeable ions in the inlet water.

(b) Improper brine draw quantity and time.

(c) Improper inlet pressure during regeneration.

(d) Insufficient salt in brine tank.

(e) Insufficient backwash rate or time.

(f) High suspended matter in inlet water.

(g) Loss of exchange material.

4.53 Repair And Replacement Orders

Repairs and replacements can be handled more efficiently if the following directions are followed:

(a) Give the Cochrane Shop Order Number as it appears on the nameplate.

(b) Designate the names of the parts required by referring to the assembly drawing of the unit.

(c) Specify the quantity of each part required.

(d) Give complete shipping instructions.

4.54 Long Shut-Down Periods

When an ion exchange unit is to be shut down for a long period of time (more than one month), it should be regenerated well with salt (20 lbs. of salt or 8 gallons of saturated brine per cubic foot). After rinsing, drain the unit, then refill and cover the zeolite bed with a 0.5% solution of formaldehyde to prevent the growth of bacteria. Refill and rinse well before returning the unit to service. Regenerate as needed (see Initial Regeneration).

If formaldehyde is not used, the zeolite bed may have to be sterilized before starting up. Consult Cochrane for procedure.

4.55 Short Shut-Down Periods

Sterilization is not necessary for short shut-off periods, however, the unit should be rinsed rapidly to waste for 5-10 minutes before use. Regenerate only if necessary.

4.56 Solomatic Valve

MAINTENANCE AND TROUBLE PROCEDURE

(1) If the eductor fails to operate properly remove the nozzle adjusting screw of the Solomatic Valve and clean out the jet with a small wire. These orifices are very small and if they continually plug up, a strainer should be installed in the inlet piping.

(2) The amount of regenerant in the storage tank should be checked before each regeneration. Insufficient regenerant will cause a loss in capacity and a double regeneration will be necessary before the unit is placed back in service.

(3) Overflow of water from the measuring tank indicates a leak in the brine suction check valve. Do not jam this valve in trying to close it tightly. If the leak persists, remove the valve bonnet and examine the disc and seat. Some foreign matter may be caught on the seat, or the valve may need replacement.

FAILURE OF VALVE TO INDEX

1. *Water pressure too low.* Minimum pressure 20 lbs., preferably 30 lbs. for reliable operation.
2. *Back pressure in drain line.* Drain lines must be full drain tap size of the valve and should always discharge at a level lower than the Solomatic valve. Constriction in the mineral bed, screens, tank or piping may cause back pressure. Inserting pressure gauges in various places will indicate where constriction may be.
3. *Adequate pressure but not enough water.* Inlet line should be full Service tap size of the valve to maintain as high a pressure as possible.
4. *Valve not seating or seating very slowly.* Internal feed tube from inlet connection to top of bonnet plugged. Remove bonnet and stem plate assembly and clean out tube with small drill or wire. Check solenoid valve to see if it is closing. Ruptured diaphragm would also prevent valve from indexing.
5. *Valve leaks to drain during service (#4) position.* May be caused by foreign matter holding stem plate slightly open, permitting water to leak from bonnet side to drain port. A normal regeneration should flush this out, but if not, remove the four bonnet bolts and inspect and clean off gasket surface. Also check Solenoid valve for leakage.
6. *Valve fails to lift.* Foreign matter could lodge in cam track preventing free movement of the cam. Remove cap and clean off cam track and follower pins. Damaged or scaled-up center ferrule or drain valve may also prevent the moving member from lifting. Cleaning or replacing parts would remedy this situation.

NOTES

1. Timers should be connected to uninterrupted electrical source.
2. By-pass valve should be closed during normal softener service.
3. Occasionally, salt in the brine tank should be loosened to lessen the possibility of salt bridging or packing.

4.57 Automatic Reset Water Meter - Design 25 B

General:

The unit is equipped with a Neptune Water Meter, which has a Design 25B, Automatic Reset Register head. When the correct Volume of water has passed through the unit, the alarm Mercury switch closes, placing the unit into regeneration (automatic systems) or sounding an alarm (semi-automatic systems).

Setting The Register:

The register should not be set for more than 75% or less than 20% of the dial capacity. To obtain the correct percentage to set on the meter, proceed as follows:

$$\frac{\text{Expected capacity from Operation Data Page} \times 100}{\text{Total capacity of meter dial}} = \%\ \text{Setting}$$

When the correct percentage is obtained, set the meter as follows:

a. Loosen small brass locking screw adjacent to percentage dial.
b. Rotate large pointer around percent dial until the small indicator attached to the large pointer is in line with the desired percentage.
c. While holding the pointer and dial in relation to each other, tighten the

small brass locking screw.

Operation:

At some point in the course of regeneration, the meter head is reset to zero by the control system. Power is applied to the reset motor by the control system, which turns the meter pointer back to the percent reading indicated on the small percentage dial. When the pointer has reached this point, the reset Mercury Switch in the meter opens stopping the reset motor.

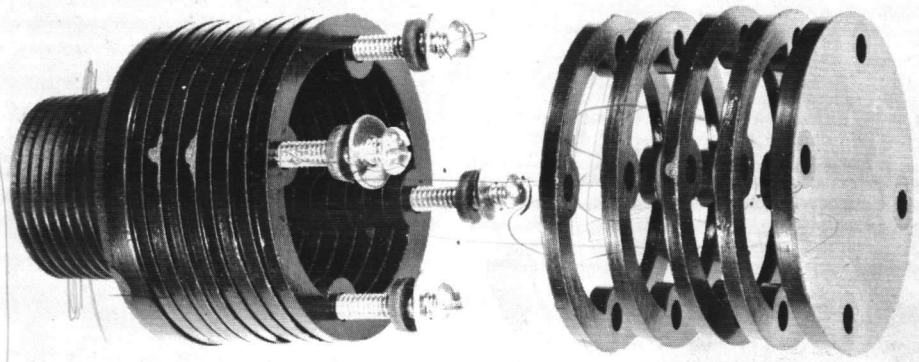

ZEO-FLO OUTLET DISTRIBUTOR

4

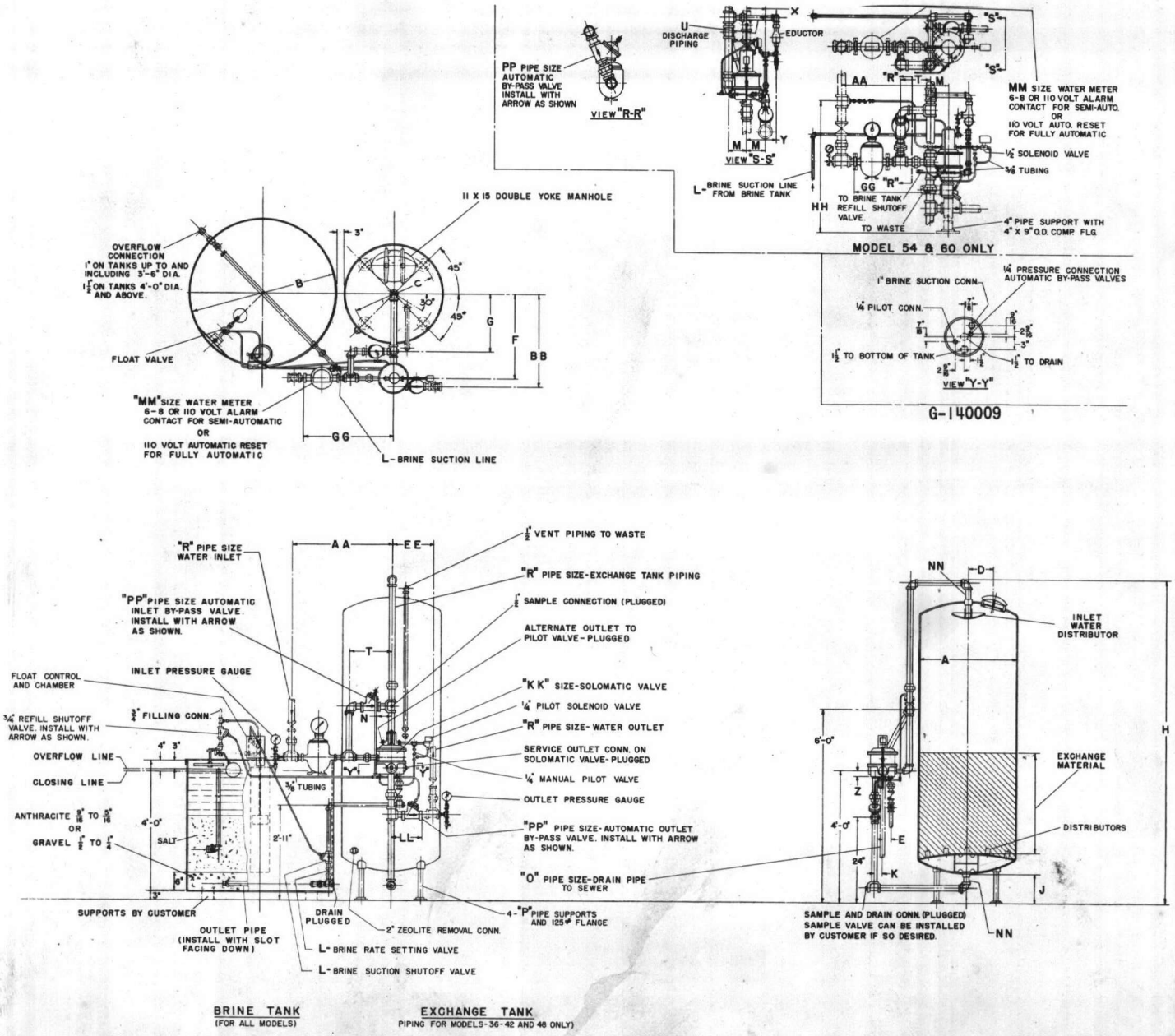

SINGLE UNIT ASSEMBLY

4552-4209-2
10-12-64

COCHRANE WATER CONDITIONING EQUIPMENT

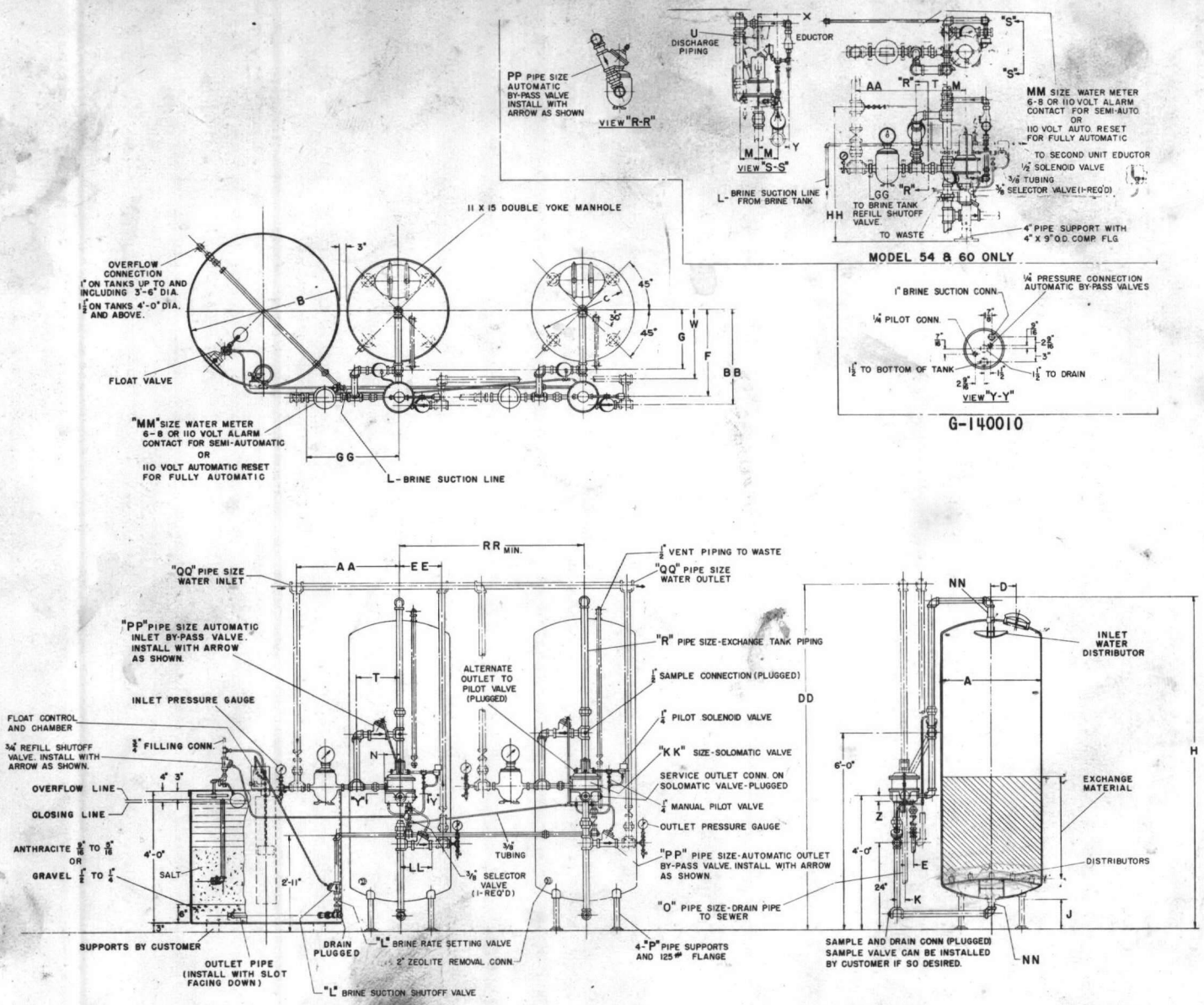

DOUBLE UNIT ASSEMBLY

SHEET 451 C

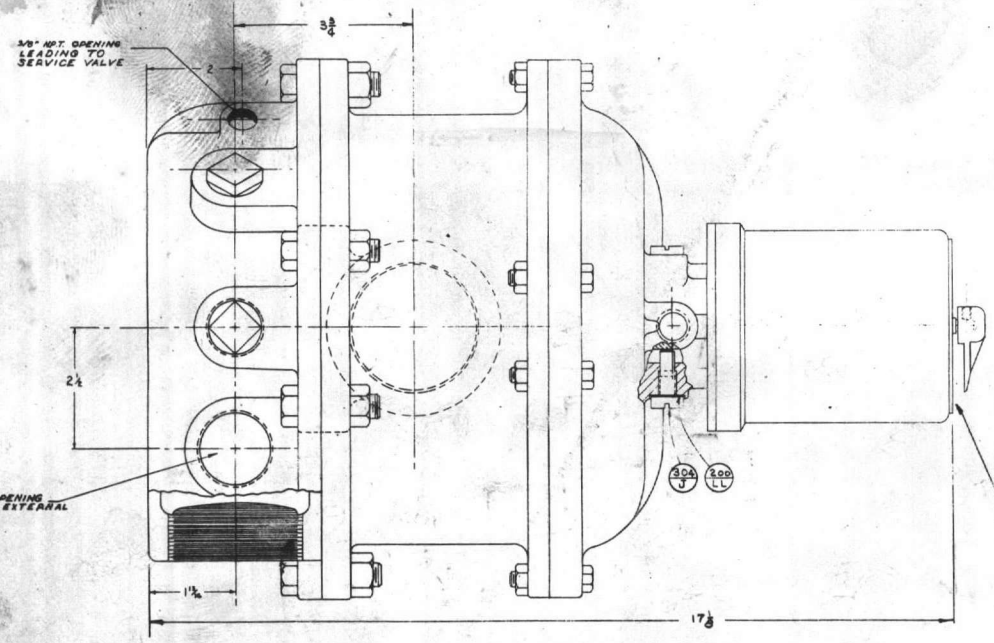

TOP OF CAP NUMBERED
#4 SERVICE
#1 BACKWASH
#2 BRINE
#3 RAPID RINSE
DIAL POINTER INDICATES POSITION

PART NO.	PART NAME	REQ.
	BACK PLATE ASSEMBLY	
305-A	BACK PLATE 2"	1
305-A	BACK PLATE 2 1/2"	1
305-H	VALVE SEAT	1
305-I	CENTER FERRULE	1
305-V	BACKWASH FERRULE	1
305-Y	RAPID RINSE FERRULE	1
17	PIPE PLUG COUNTERSUNK 1"	2
	STEM PLATE ASSEMBLY	
305-C	STEM PLATE	1
304-AK	STEM PLATE RELIEF VALVE	1
304-AN	RELIEF VALVE SEAT	1
304-AL	HOLDER PLATE	1
360-MJ	"O" RING 1820-15	2
304-AM	HOLDER PLATE SCREWS	3
	CAM-STEM SHAFT ASSEMBLY	
305-L	STEM SHAFT	1
304-U	CAM KEY PIN	1
304-E	CAM	1
304-AI	SHOULDER SCREW	1
304-T	LIFT PIN (STEM PLATE)	1
305-S	DRAIN VALVE	1
9	SET SCREW SOCKET HD. 10-32X1/2	1
	DIAPHRAGM ASSEMBLY	
305-F	DIAPHRAGM	1
305-N	DIAPHRAGM PLATE (UPPER)	1
305-R	DIAPHRAGM PLATE (LOWER)	1
304-Q	LOCK NUT	1
305-M	DIAPHRAGM PLATE BUSHING	1
1	CAP SC. HEX HD. BRASS 5/16-18X3/4	8
	CAP ASSEMBLY	
305-D	CAP WITH LINER (305-AB)	1
304-J	CAM FOLLOWER	2
200-LL	CAM FOLLOWER GASKET	2
305-O	COVER FOR CAP	1
304-X	COVER GASKET	1
360-MJ	"O" RING 1820-15	1
8	MACH. SCREW FILL. HD. 1/4-20X3/4	4
305-T	FLOW CONTROLLER 1.5 G.P.M.	1
305-U	FLOW CONTROLLER 3.0 G.P.M.	1

PART NO.	PART NAME	REQ.
	SWITCH ASSEMBLY	
305-AG	YZ-2RL LIMIT SWITCH	1
305-J	SWITCH BRACKET	1
305-MM	POINTER (POS. INDICATOR)	1
305-AG	DIAL PLATE	1
305-AJ	SWITCH COVER	1
305-G	POINTER ROD	1
305-E	CONDUIT BRACKET	1
10	SET SCREW SOC. HD. 10-24X5/16	3
11	MACH. SCREW FILL. HD. 10-24X1/2	2
7	MACH. SCREW RD. HD. 6-32X1/2	2
8	MACH. SCREW RD. HD. 4-40X1/2	2
6	MACH. SCREW RD. HD. 6-32X7/8	2
13	NUT REG. HEX 6-32	2
12	SET SC. HDLESS CUP PT. 10-32X1/4	1
	BONNET ASSEMBLY	
305-B	BONNET 2"	1
305-B	BONNET 2 1/2"	1
	BACKWASH ASSEMBLY	
305-P	CHOKE STEM (BACKWASH)	1
305-AY	GASKET 5/8" ID X 1" OD	1
308-H	STOP NUT 5/8-18	1
201-YY	O-RING 1820-10	1
	RAPID RINSE ASSEMBLY	
305-Z	CONE STEM (RAPID RINSE)	1
305-AY	GASKET 5/8" ID X 1" OD	1
308-H	STOP NUT 5/8-18	1
201-YY	O-RING 1820-10	1
2	CAP SCREW HEX HD. 5/16-18X1 1/2	16
14	NUT REG. HEX 5/16-18	16
4	CAP SCREW HEX HD. 1/2-13X1 3/4	8
15	NUT REG. HEX 1/2-13	8
3	CAP SC. HEX HD. BRASS 1/2-13 X 1	2
600-U	O-RING 1820-7	1
16	LOCKWASHER BRONZE 1/4" C'TSK.	3
18	NIPPLE 3/8 I.P.S.	2
19	BUSHING 3/8 X 1/2 I.P.S.	2

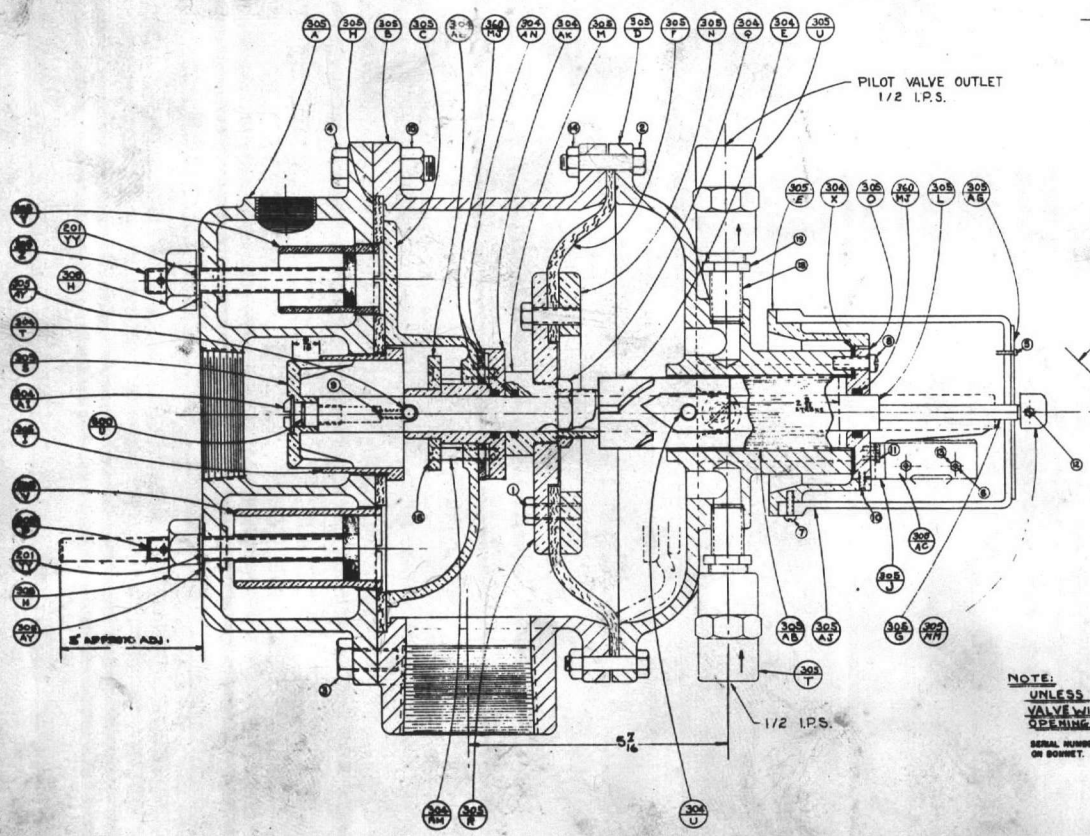

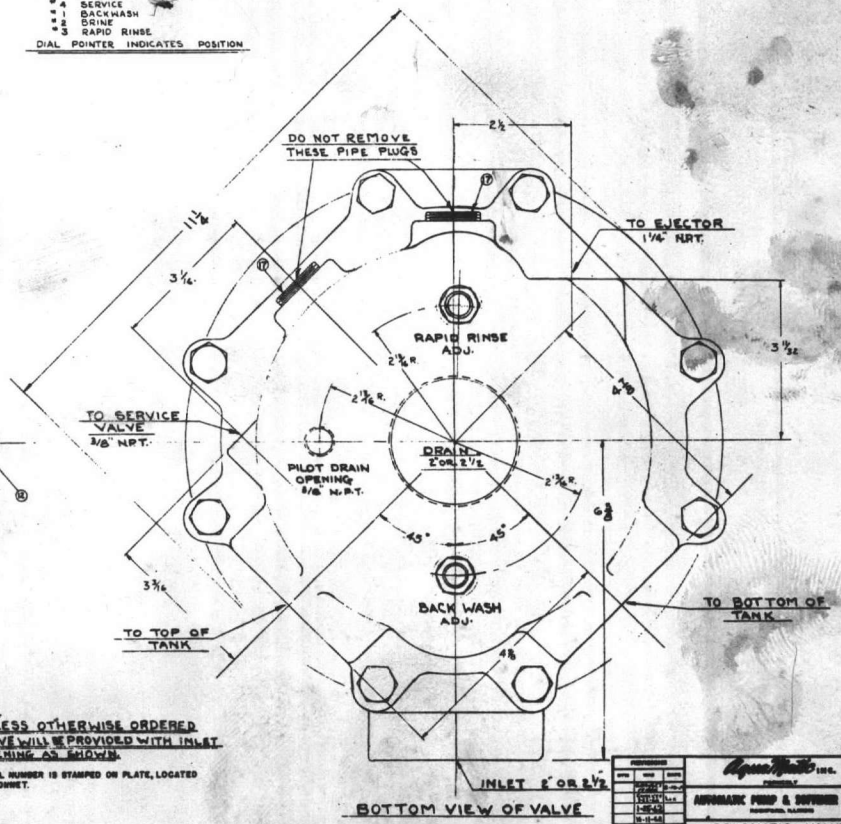

BOTTOM VIEW OF VALVE

NOTE:
UNLESS OTHERWISE ORDERED VALVE WILL BE PROVIDED WITH INLET OPENING AS SHOWN.

SERIAL NUMBER IS STAMPED ON PLATE, LOCATED ON BONNET.

REVISIONS		
DATE	NOTE	BY
	2-20-62	
	3-27-62	
	1-15-63	
	11-11-63	

AUTOMATIC PUMP & SUPPLIER CORP.

SOLOMATIC VALVE
SERIES 305. 2"-2 1/2"

DRAWN BY: JOHN
DATE: 6-20-54
APPROVED
DWG. NO. 5-305-1

4552, 4211
10-12-64

SHEET 854-3

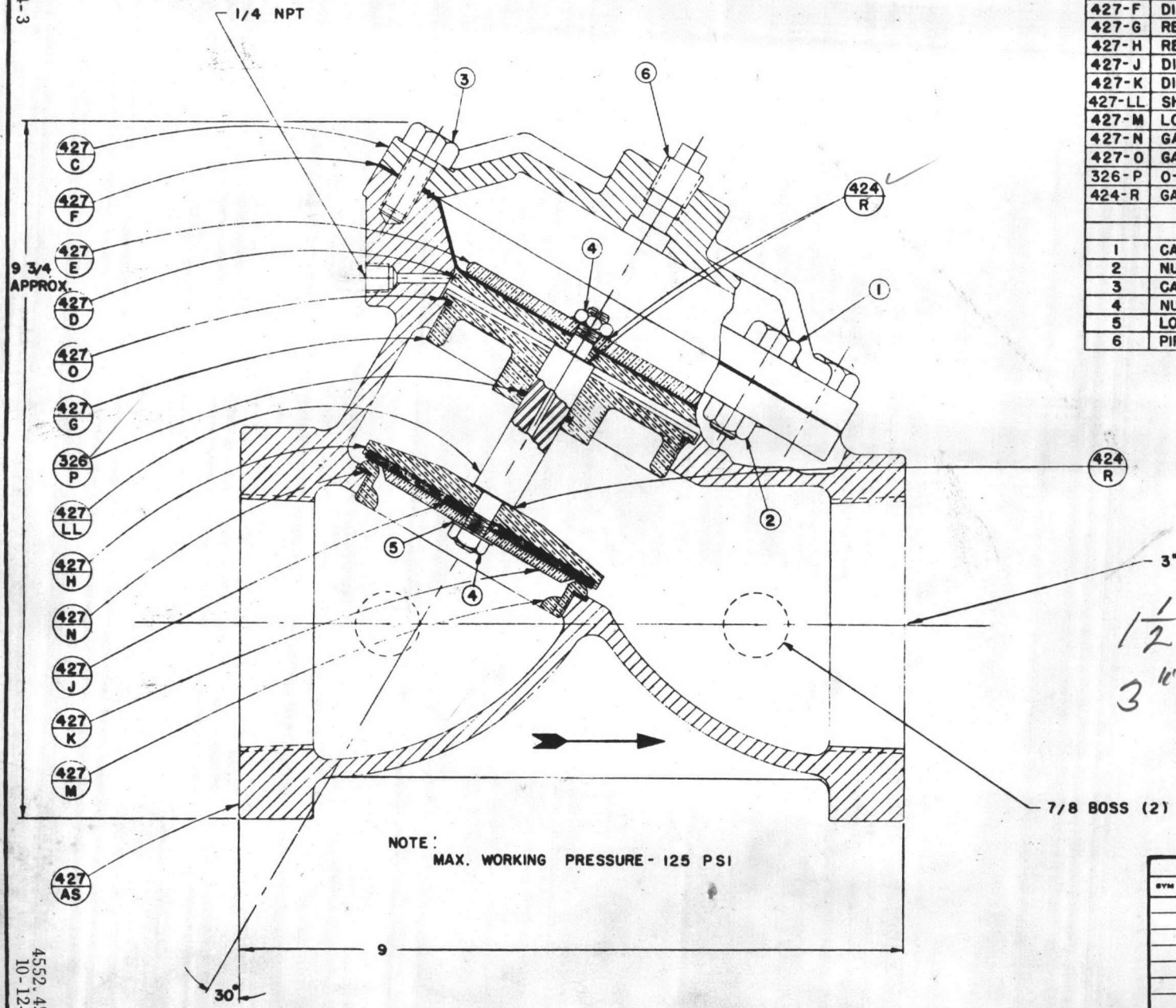

1½" Valves are Series 424
3" Valves are Series 427

PART NO.	PART NAME	REQ.
427-AS	BODY - SCREWED 3" IPS	1
427-C	CAP	1
427-D	LOWER DIAPHRAGM WASHER	1
427-E	UPPER DIAPHRAGM WASHER	1
427-F	DIAPHRAGM	1
427-G	RETAINER - O-RING	1
427-H	RETAINER - DISC	1
427-J	DISC	1
427-K	DISC WASHER	1
427-LL	SHAFT	1
427-M	LOWER SEAT	1
427-N	GASKET - LOWER SEAT	1
427-O	GASKET - O-RING RETAINER	1
326-P	O-RING PAI 1-114	1
424-R	GASKET - DIAPHRAGM WASHER	3
1	CAP SC. HEX HD. 3/8-16 X 1 1/2	6
2	NUT HEX SEMI-FIN 3/8-16	6
3	CAP SC. BRASS HEX HD. 3/8-16 X 7/8	2
4	NUT HEX JAM BRASS 5/16-24	2
5	LOCK WASHER INT. BRONZE 5/16	1
6	PIPE PLUG SQ. HD. GALV. 1/4 IPS	1

NOTE:
MAX. WORKING PRESSURE - 125 PSI

REVISIONS		
SYM	WAS	DATE

AquaMatic INC.
FORMERLY
AUTOMATIC PUMP & SOFTENER CORP.
ROCKFORD, ILLINOIS

DIAPHRAGM VALVE
NORMALLY CLOSED
SERIES 427 3" SCREWED

DRN. BY LON
CH'KD BY
DATE 12-9-60
APPROVED
SCALE
PART NO.
DR'G NO. A-427-22

4552.4212
10-12-64

COCHRANE WATER CONDITIONING EQUIPMENT

FLOAT CONTROL

Clayton **CF1**

CATALOG NUMBER	STOCK NUMBER
CF1-A1	TV-9246
CF1-A2	TV-9261
CF1-C1	TV-9250

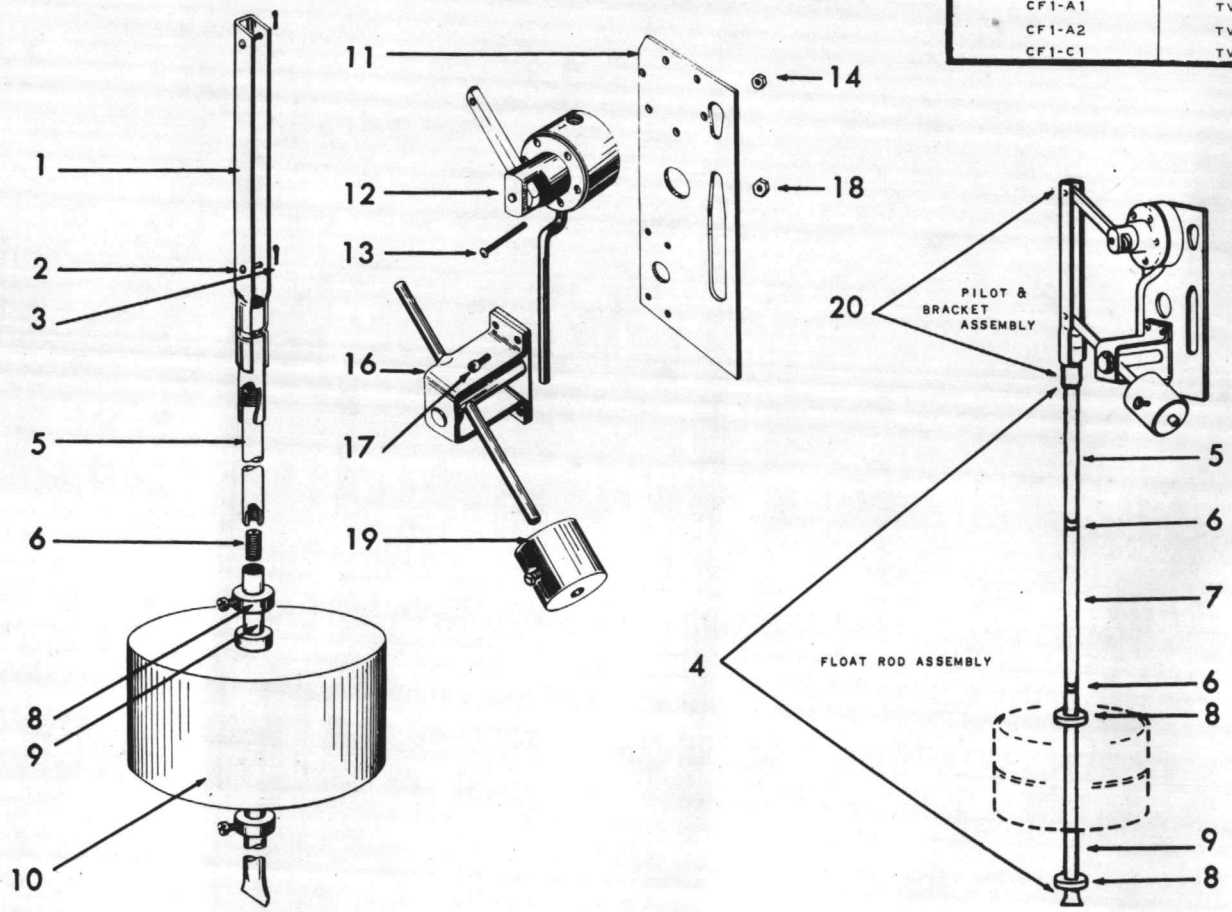

ITEM	DESCRIPTION	MATERIAL	PART NO.
1	LINK ASSEMBLY	BRASS	TV-8316
2	PIN-LINK (2 REQ'D)	BRASS	TV-6407
3	COTTER PINS 1/16" X ½" (2 REQ'D)	BRASS	NONE
4	FLOAT ROD ASSEMBLY (2 FT)	BRASS	TV-8048
	FLOAT ROD ASSEMBLY (2 FT)	STAINLESS STEEL	C-3535

BRASS AND STAINLESS STEEL FLOAT ROD IS AVAILABLE IN ADDITIONAL INCREMENTS OF ONE FOOT

FLOAT ROD ASSEMBLY BREAKDOWN — ITEMS 5 THROUGH 9

ITEM	DESCRIPTION	BRASS PART NO.	STAINLESS STEEL PART NO.
5	UPPER FLOAT ROD (1 FT)	TV-6880	C-3536
	UPPER FLOAT ROD (2 FT)	C-2744	C-4721
6	STUD (REQUIRED FOR CONNECTING UPPER AND LOWER RODS AND ONE FOR EACH EXTENSION ROD.)	TV-6881	C-3537
7	EXTENSION FLOAT ROD (1 FT)	TV-6882	C-6185
	EXTENSION FLOAT ROD (2 FT)	C-3661	C-7097
8	STOP COLLARS (2 REQ'D) INCLUDES SET SCREWS 8/32" X 3/8"	TV-274-1	TV-6871
9	LOWER FLOAT ROD (1 FT)	39940	39942
	LOWER FLOAT ROD (2 FT)	39944	39946

ITEM	DESCRIPTION	MATERIAL	PART NO.
10	FLOAT BALL	PLASTIC	C-9253
		COPPER	TV-3457
		STAINLESS STEEL	C-648
11	BASE & MOUNTING PLATE	STEEL	TV-6364
12	PILOT VALVE ASSEMBLY CF1-A1	BRASS, STEEL WITH STAINLESS STEEL	TV-8463
	CF1-A2		30038
	CF1-C1		TV-9594
13	MACHINE SCREW 6/32" X 1 7/16" RD. HD. (6 REQ'D)	BRASS	NONE
14	HEX NUT 6/32 (8 REQ'D)	BRASS	NONE
16	COUNTER BALANCE BRACKET ASSEMBLY	BRASS	45569
17	MACHINE SCREW 10/32 X ½" (4 REQ'D)	BRASS	NONE
18	HEX NUT 10/32 (4 REQ'D)	BRASS	NONE
19	COUNTERWEIGHT (CAD. PLATED STEEL) VARIES WITH ROD LENGTH, INCLUDES SET SCREWS.		
20	PILOT & BRACKET ASSEMBLY CF1-A1	BRASS, STEEL WITH STAINLESS STEEL	TV-9235
	CF1-A2		TV-9258
	CF1-C1		TV-9526

ROD LENGTH	SET SCREW	PART NO.
2' – 3'	1/4 – 20 X 3/4"	TV-69-3
4' – 6'	1/4 – 20 X 1"	TV-6230
7' – 12'	1/4 – 20 X 1 3/4"	TV-6231

5.0 AUTOMATIC REGENERATION CONTROLLER CLASS 2

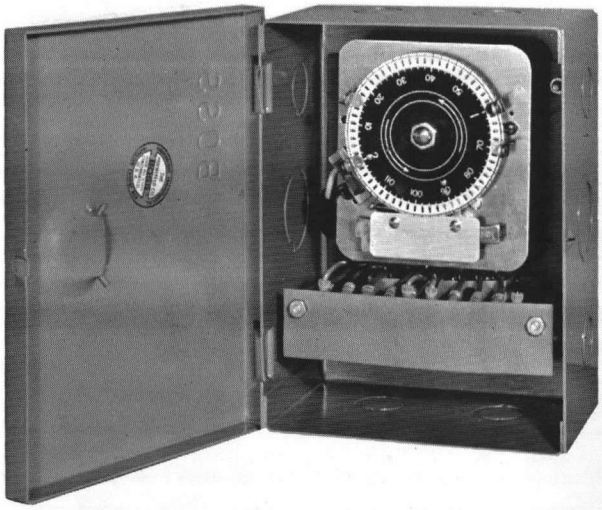

GENERAL

A compact program timer that controls the regeneration sequence of the Solomatic valves:

Four trippers on a two hour dial actuate the Solenoid pilot valve four times during the cycle, each tripper advancing the Solomatic valve one step. Three of these trippers are adjustable to allow proper time for backwash, brine-slow rinse, and fast rinse. A pin on the back of the dial stops the cycle timer two hours after initiation regardless of the sequence setting of the adjustable trippers.

The Solenoid pilot is held open thirty to forty seconds, by each tripper - ample time for the upstroke of the Solomatic valve. A fully enclosed microswitch is used to close this circuit.

Sequence of Operation

The electrical operation of the Class 2 controller is as follows:

When the water meter dial has worked its way back to zero, indicating that the unit has treated the number of gallons shown in the Operation Data, water meter contact LS, location 2, closes energizing relay R-1 through the normally closed contact of R-2.

Energizing relay R-1, closes relay R-1 contact at location 3, energizing the timer motor location 4, which starts to run.

When the regeneration has started and the timer motor has started running, the timer hold in contacts, location 4, are mechanically closed, keeping power on the timer motor.

When the meter contacts closed, power was also applied to the reset portion of the water meter.

Power was passed from the timer hold in contacts through the normally closed contacts of relay R-1, location 3, through the switch T-2, T-3, meter #1, location #1, driving the reset motor, which turns the indicator on the water meter, back to the setting, which has been placed on the meter.

When the hand reaches the set point, contact T-2 and T-3 of the water meter opens, opening the circuit to the reset motor and stopping the motor.

As the timer motor progresses through its cycle, the trippers on the time dial trip the timer switch, location 8, energizing the indexer through relay R-1. Each time the indexer is energized, the solomatic valve advances one position.

When relay R-1 coil is energized, relay contacts R-1, location 6, open preventing the Unit #2 from being regenerated, while Unit #1 is in the process of regeneration.

The timer motor continues to run through the regeneration and back to the zero point. When it arrives at the zero point, the timer hold in switch, location 4, is mechanically opened, stopping the timer at the zero point.

COCHRANE WATER CONDITIONING EQUIPMENT

FULLY AUTOMATIC REGENERATION SYSTEM CLASS 2

C-141175

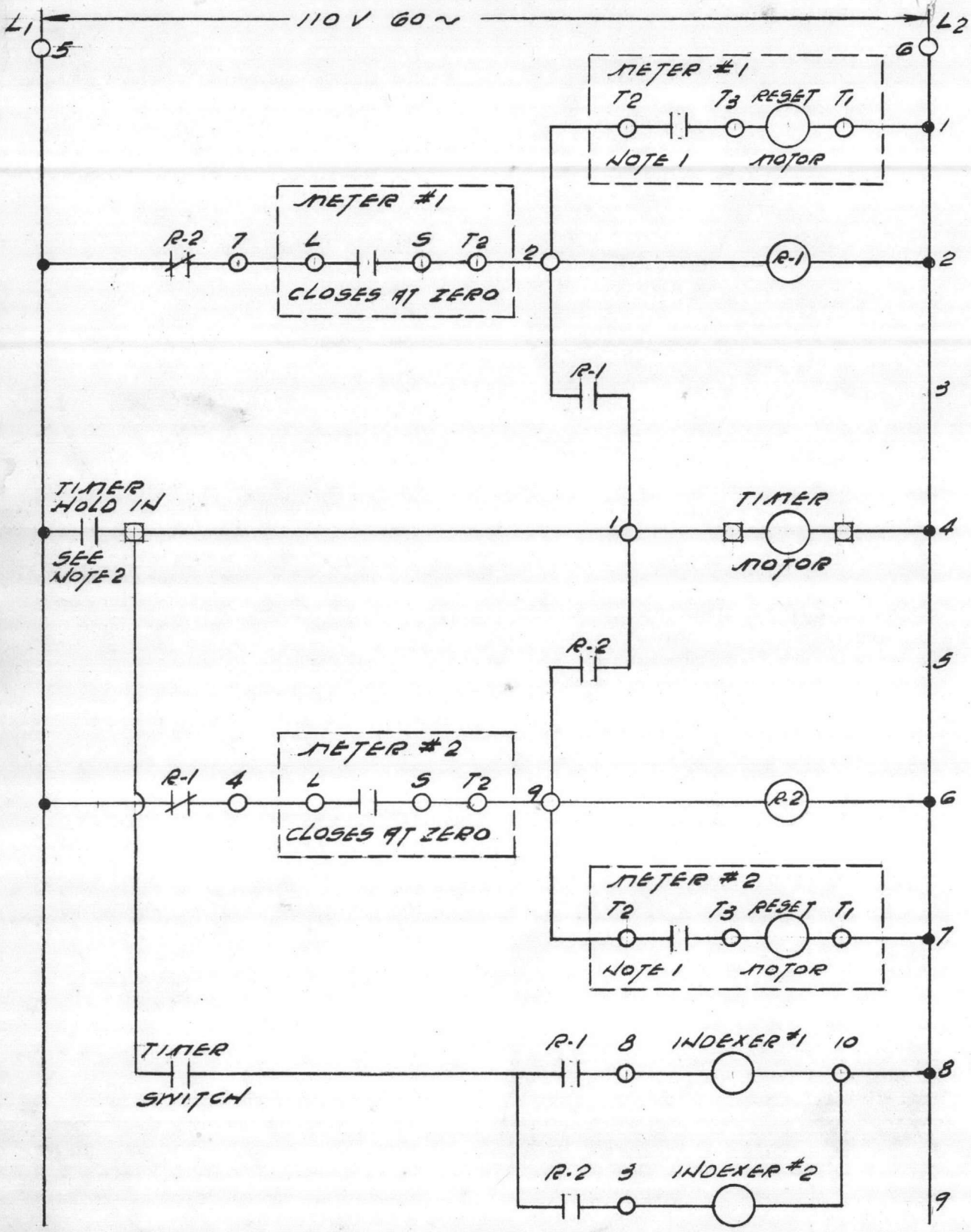

☐ Quick Disconnect

1. Meter Contact T2 - T3 opens when meter resets to set point.
2. Timer hold in contact closes mechanically when timer motor starts and remains closed until the timer completes its cycle.

4552.5102-2
5-20-64

TAB PLACEMENT HERE

DESCRIPTION:

5

☐ Tab page did not contain hand written information

☑ Tab page contained hand written information
*Scanned as next image