Pump and Lighting Company

ENGINEERED PRODUCTS DIVISION

926 2ND STREET N.E. · P.O. BOX 2504 · HICKORY, N.C. 28601

704/324-9705

OPERATION AND INSTRUCTION MANUALS

PROJECT: Utility Improvements
U.S. Marine Corps Base
Courthouse Bay Area
Camp Lejeune, NC 28542
Project Number B62470-81-C-1478

SUBJECT: Section 11210 Water Pumps
Paragraph 1.2.2 Filter Pumps

Conditions: 545 GPM @ 95'TDH

Two (2) Fairbanks Morse 6" x 4" Figure 2876A horizontal split case pumps with steel bases, flexible couplings, coupling guards, and U.S. Motors, 20 HP, 3-60-208 volt, 1770 RPM motors.

February 12, 1985

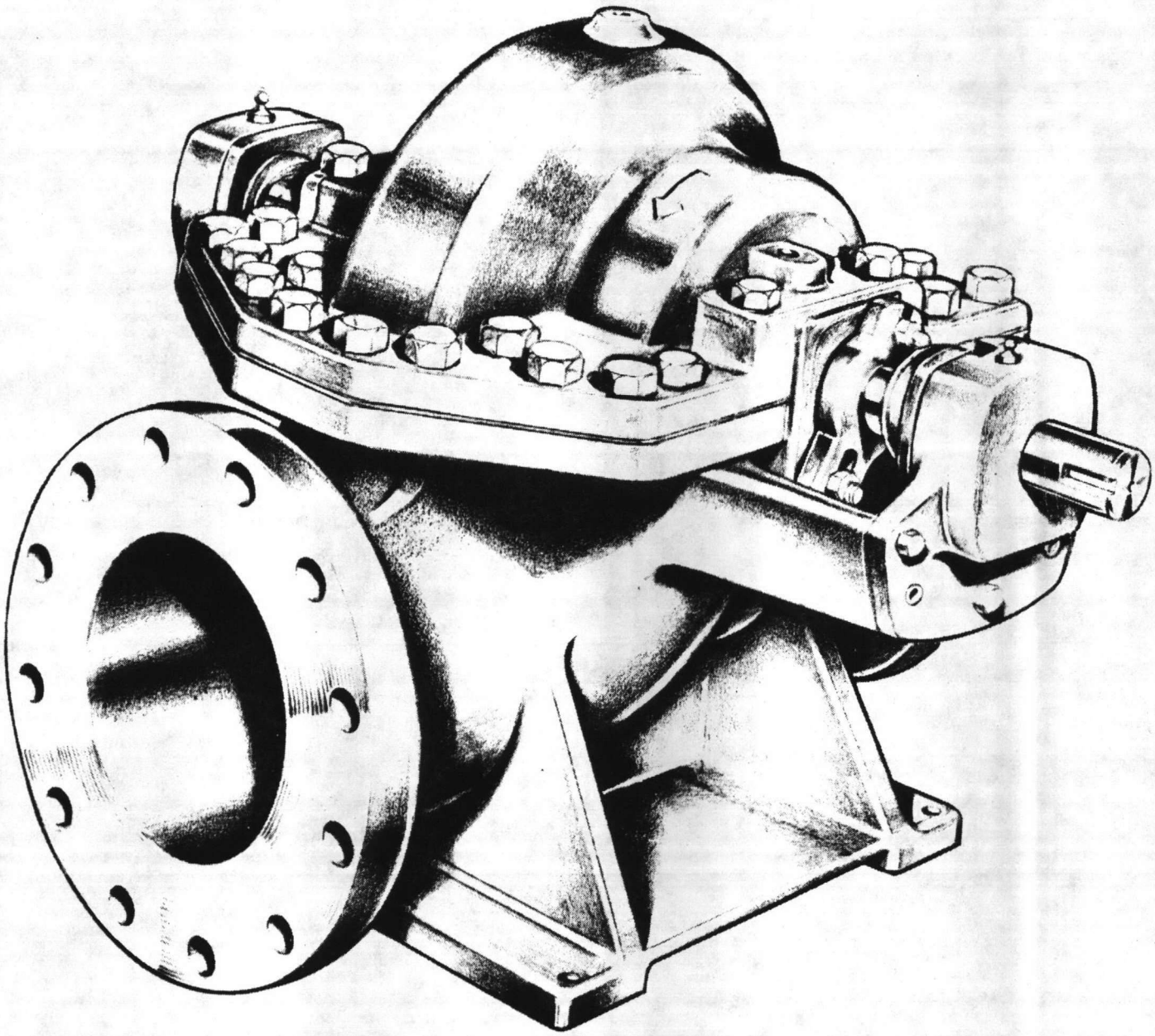

Ref.	Description
1	Impeller
2	Casing, Lower Half
*2A	Bolts, Casing
*2B	Pin, Casing Alignment
*2C	Plugs, Casing Pipe
3	Casing, Upper Half
4	Shaft
10	Ring, Water Seal
A14	Sleeve, Shaft
B14	Sleeve, Shaft, Keyed
16	Ring, Casing
17	Ring, Impeller
19	Gland, Split Packing
20	Washer, Stuffing Box
A31	Gland, Solid Packing
B31	Gland, Solid Mechanical Seal
*31A	Stud, Gland
*31B	Nut, Gland
102	Key, Impeller
126	Water Deflector
157	Gasket, Casing
A158	Housing, Inboard Grease Lube Bearing
B158	Housing, Outboard Grease Lube Bearing

Ref.	Description
*C158	Housing, Inboard Oil Lube Bearing
D158	Housing, Outboard Oil Lube Bearing
*E158	Housing, Inboard Water Cooled Bearing
F158	Housing, Outboard Water Cooled Bearing
*158A	Pin, Bearing Housing Alignment
*158B	Bolts, Housing
158C	Lipseal
*158D	Plug, Housing Pipe
A159	Cover, Grease Lube Bearing Housing
B159	Cover, Oil Lube Bearing Housing
C159	Cover, Water Cooled Bearing Housing
159A	"O" Ring, Oil Lube Cover
159B	"O" Ring, Water Cooled Cover
159C	Lipseal
*159D	Bolts, Housing Cover
163	Bearing, Inboard
168	Bearing, Outboard
212	Packing
213	Nut, Shaft Sleeve
272	Key, Coupling
345	Ring, Snap
452	"O" Ring, Shaft Sleeve
456	Seal, Mechanical

***Not shown on sectional drawing.**

STANDARD CONSTRUCTION

The full sectional drawing shows all standard features: grease lubricated bearings, one piece packing glands, straight shaft sleeves held in place by threaded shaft sleeve nuts and sealed with loctite, 7 rings of packing, internal cored water passage to packing box from volute, integral impeller wear rings, and casing wear rings.

OPTIONAL CONSTRUCTION

Oil Lubricated Bearing Housing. This partial section shows the oil lubricated bearing housing with its larger lubricant capacity. Lip seals and "O" rings are provided to prevent both loss of oil and entrance of foreign material. The bearing is the same as used in the grease lubricated design. This housing and cover assembly is interchangeable with the standard grease lubricated housing assembly and may be field installed. A constant level oiler provides additional reservoir to maintain the proper oil level within the housing.

Water Cooled Bearing Housing. This partial section shows the water cooled bearing housing. This arrangement is oil lubricated and is field interchangeable with all other bearing housing. It has an additional cavity for circulation of a cooling medium to protect the bearings when pumping liquids at elevated temperatures. A pipe tap is provided for insertion of a thermometer or probe to monitor bearing temperature.

Typical Mechanical Seal. This partial section shows an inside mechanical seal with a solid gland. Various types, materials, arrangements and manufactures of mechanical seals may be used.

Impeller With Wear Rings. This partial section shows the optional impeller wear ring. If pump is originally supplied with these optional rings, they can be replaced in the field. The standard impeller is designed with an integral wear ring which can be machined to accept the optional rings.

Optional Shaft Sleeve And Water Seal Ring. This partial section shows two options that may be furnished separately or together. The shaft sleeve has both a keyway to engage the impeller key for positive mechanical drive and an "O" ring seal at the sleeve nut for operation at elevated temperatures. When suction pressure drops, the addition of a water seal ring is recommended both to provide lubrication/cooling for the box and to seal against the entrance of air. The standard ¼" pipe tap at the top of the packing box, in conjunction with the optional water seal ring, may be used for injection of liquid from an outside source, or as a bleedoff when suction pressure exceeds 175 PSI. Note that the internal cored passageway should be blocked when using the external connection.

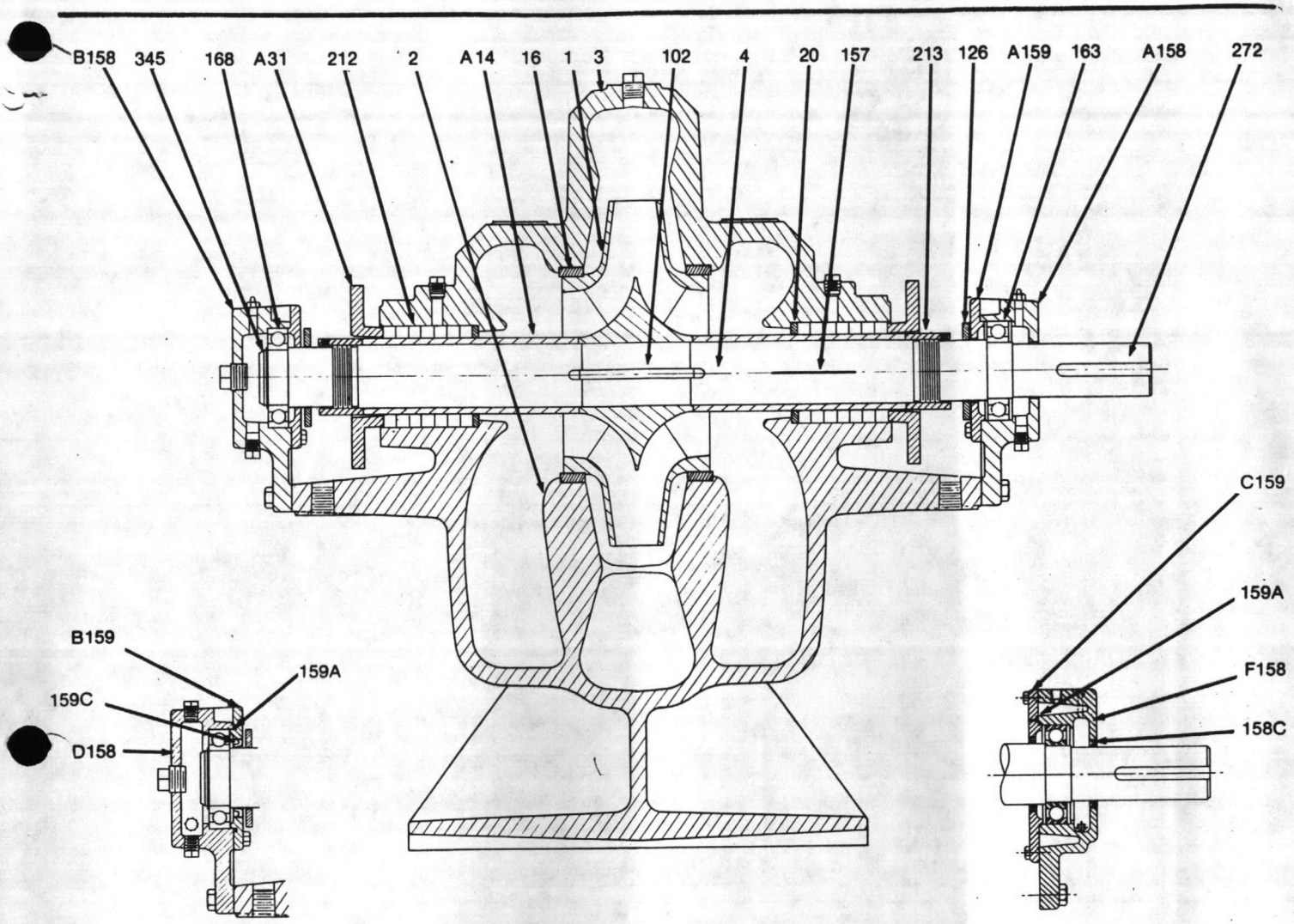

OIL LUBRICATED BEARING HOUSING

STANDARD CONSTRUCTION

WATER COOLED BEARING HOUSING

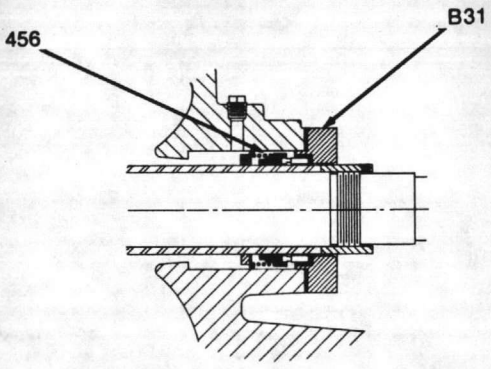

TYPICAL MECHANICAL SEAL

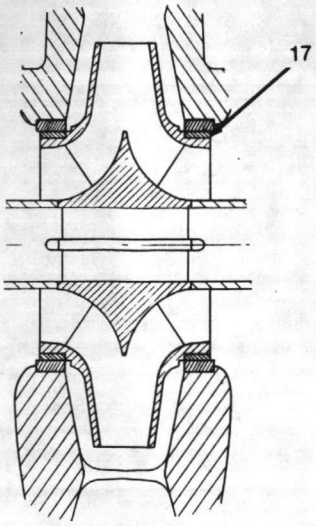

IMPELLER WITH WEAR RINGS

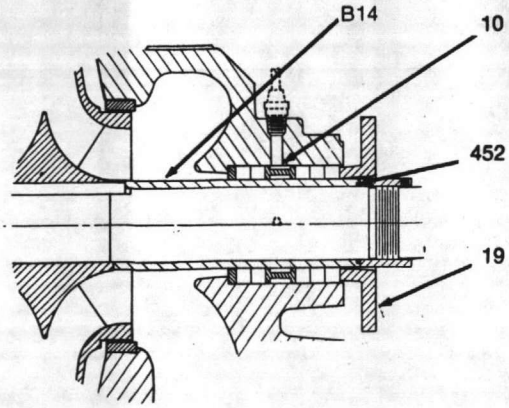

OPTIONAL SHAFT SLEEVE AND WATER SEAL RING.

Reference Number	Standard Materials	All Iron	Ductile Iron	All Bronze	Zincless Bronze	Carbon Steel	316 Stainless Steel	Alloy 20 Stainless Steel
1	Bronze B584 AL836	Cast Iron A48 CL30	Bronze B584 AL836	Bronze B584 AL836	Bronze B584 AL937	Cast Iron A48 CL30	Stainless Steel A296 CF8M	Stainless Steel A296 CN7M
2	Cast Iron A48 CL30	Cast Iron A48 CL30	Ductile Iron A536 65-45-12	Bronze B584 AL836	Bronze B584 AL937	Steel A216 GR WCB	Stainless Steel A296 CF8M	Stainless Steel A296 CN7M
2A	Steel A449	Steel A449	Steel A449	Stainless Steel A276 303	Stainless Steel A276 303	Steel A449	Stainless Steel A276 316	Stainless Steel A276 316
2B	Steel Commercial	Steel Commercial	Steel Commercial	Stainless Steel A276 303	Stainless Steel A276 303	Steel Commercial	Stainless Steel A276 316	Stainless Steel A276 316
2C	Iron Commercial	Iron Commercial	Iron Commercial	Bronze Commercial	Zincless Bronze	Steel Commercial	Stainless Steel A276 316	Monel Commercial
3	Cast Iron A48 CL30	Cast Iron A48 CL30	Ductile Iron A536 65-45-12	Bronze B584 AL836	Bronze B584 AL937	Steel A216 GR WCB	Stainless Steel A296 CF8M	Stainless Steel A296 CN7M
4	Steel A576 GR1141	Steel A576 GR1141	Steel A576 GR1141	Stainless Steel A582 416	Stainless Steel A276 316	Steel A576 GR1141	Stainless Steel A276 316	Stainless Steel B473
10	Teflon	Teflon	Teflon	Teflon	Teflon	Teflon	Teflon	Teflon
A14	Bronze B505 AL932	Stainless Steel A582 416	Bronze B505 AL932	Bronze B505 AL932	Stainless Steel A276 316	Bronze B505 AL932	Stainless Steel A276 316	Stainless Steel B473
B14	Bronze B505 AL932	Stainless Steel A582 416	Bronze B505 AL932	Bronze B505 AL932	Stainless Steel A276 316	Bronze B505 AL932	Stainless Steel A276 316	Stainless Steel B473
16	Bronze B505 AL932	Cast Iron A48 CL30	Bronze B505 AL932	Bronze B505 AL932	Bronze B505 AL937	Bronze B505 AL932	Stainless Steel A296 CF8M	Stainless Steel A296 CN7M
17	Bronze B505 AL932	Cast Iron A48 CL30	Bronze B505 AL932	Bronze B505 AL932	Bronze B505 AL937	Bronze B505 AL932	Stainless Steel A296 CD4MCU	Stainless Steel A296 CN7M
19	Cast Iron A48 CL30	Cast Iron A48 CL30	Cast Iron A48 CL30	Bronze B584 AL836	Bronze B584 AL937	Cast Iron A48 CL30	Stainless Steel A296 CF8M	Stainless Steel A296 CN7M
20	Steel A108 GR1015	Steel A108 GR1015	Steel A108 GR1015	Bronze B505 AL932	Bronze B505 AL937	Steel A108 GR1015	Stainless Steel A276 316	Stainless Steel B473
A31	Cast Iron A48 CL30	Cast Iron A48 CL30	Cast Iron A48 CL30	Bronze B584 AL836	Bronze B584 AL937	Cast Iron A48 CL30	Stainless Steel A296 CF8M	Stainless Steel A296 CN7M
B31	Cast Iron A48 CL30	Cast Iron A48 CL30	Cast Iron A48 CL30	Bronze B584 AL836	Bronze B584 AL937	Cast Iron A48 CL30	Stainless Steel A296 CF8M	Stainless Steel A296 CN7M
31A	Bronze B98 651	Stainless Steel A276 303	Bronze B98 651	Stainless Steel A276 303	Stainless Steel A276 303	Bronze B98 651	Stainless Steel A276 316	Stainless Steel A276 316
31B	Bronze B98 651	Stainless Steel A276 303	Bronze B98 651	Stainless Steel A276 303	Stainless Steel A276 303	Bronze B98 651	Stainless Steel A276 316	Stainless Steel A276 316
102	Steel A108 GR1018	Steel A108 GR1018	Steel A108 GR1018	Stainless Steel A582 416	Stainless Steel A582 416	Steel A108 GR1018	Stainless Steel A276 316	Stainless Steel A276 316
126	Neoprene Commercial	Neoprene Commercial	Neoprene Commercial	Neoprene Commercial	Neoprene Commercial	Neoprene Commercial	Neoprene Commercial	Neoprene Commercial
157	Sheet Packing D1170P3313B	Sheet Packing D1170P3313B	Sheet Packing D1170P3313B	Sheet Packing D1170P3313B	Sheet Packing D1170P3313B	Sheet Packing D1170P3313B	Sheet Packing D1170P3313B	Sheet Packing D1170P3313B
A158	Cast Iron A48 CL30	Cast Iron A48 CL30	Cast Iron A48 CL30	Cast Iron A48 CL30	Cast Iron A48 CL30	Cast Iron A48 CL30	Cast Iron A48 CL30	Cast Iron A48 CL30
B158	Cast Iron A48 CL30	Cast Iron A48 CL30	Cast Iron A48 CL30	Cast Iron A48 CL30	Cast Iron A48 CL30	Cast Iron A48 CL30	Cast Iron A48 CL30	Cast Iron A48 CL30
C158	Cast Iron A48 CL30	Cast Iron A48 CL30	Cast Iron A48 CL30	Cast Iron A48 CL30	Cast Iron A48 CL30	Cast Iron A48 CL30	Cast Iron A48 CL30	Cast Iron A48 CL30
D158	Cast Iron A48 CL30	Cast Iron A48 CL30	Cast Iron A48 CL30	Cast Iron A48 CL30	Cast Iron A48 CL30	Cast Iron A48 CL30	Cast Iron A48 CL30	Cast Iron A48 CL30
E158	Cast Iron A48 CL30	Cast Iron A48 CL30	Cast Iron A48 CL30	Cast Iron A48 CL30	Cast Iron A48 CL30	Cast Iron A48 CL30	Cast Iron A48 CL30	Cast Iron A48 CL30
F158	Cast Iron A48 CL30	Cast Iron A48 CL30	Cast Iron A48 CL30	Cast Iron A48 CL30	Cast Iron A48 CL30	Cast Iron A48 CL30	Cast Iron A48 CL30	Cast Iron A48 CL30

NOTE: All material specifications are ASTM unless otherwise noted.

Colt Industries Fairbanks Morse Pump Division

CERTIFIED CURVE

PUMP NO. K3M1-054884-1 STAGES ONE SIZE-FIGURE 4-2876A

TESTED 8/15/84 DRIVER DYNO-28 MTR IMPELLER J4E1A2

IMPELLER DIAMETER 10.2"

Certified Correct By _____ Engineer _____ Date RPM 1755

CERTIFIED PUMP PERFORMANCE CURVE

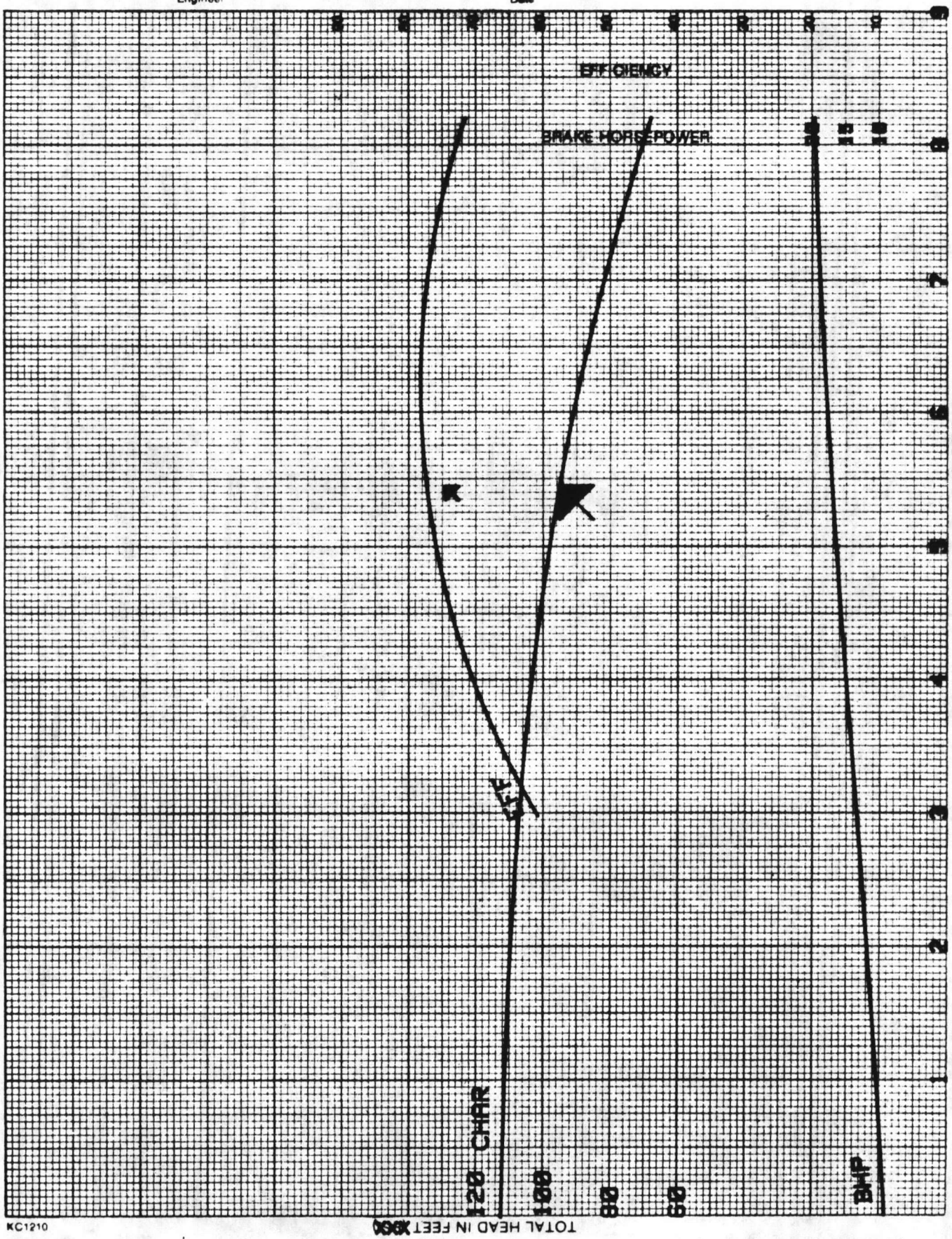

KC1210

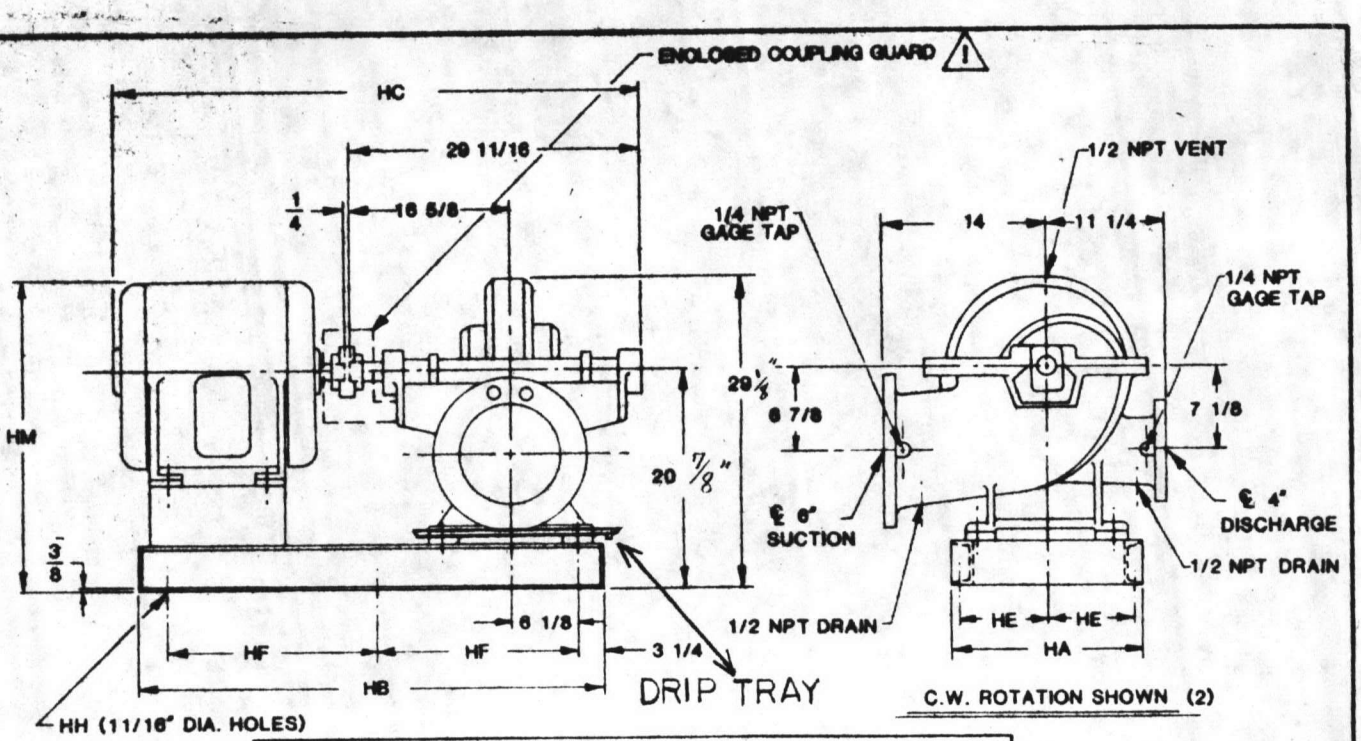

UNIT DIMENSIONS							
MOTOR FRAME SIZE	BASE					MOTOR (1)	
	HA	HB	HE	HF (3)	HH	HM	HC
184 T	19	42 1/2	8 3/4	36 *	4	25 1/2	45 3/4
213 T	19	42 1/2	8 3/4	36 *	4	26 1/4	48 1/4
215 T	19	48 1/2	8 3/4	21	6	26 1/4	49 3/4
~~254 T~~	~~19~~	~~48 1/2~~	~~8 3/4~~	~~21~~	~~6~~	~~27 1/8~~	~~52 3/8~~
256 T	19	48 1/2	8 3/4	21	6	27 1/8	54
~~284 TS~~	~~19~~	~~48 1/2~~	~~8 3/4~~	~~21~~	~~6~~	~~27 3/4~~	~~53 3/8~~
286 TS	19	48 1/2	8 3/4	21	6	27 3/4	53 1/2
324 TS	19	54 1/2	8 3/4	24	6	28 3/4	56 1/8
326 TS	19	54 1/2	8 3/4	24	6	28 3/4	56 1/8
364 TS	25	54 1/2	11 3/4	24	6	29 3/4	57 5/8
365 TS	25	54 1/2	11 3/4	24	6	29 3/4	57 5/8
404 TS	25	54 1/2	11 3/4	24	6	30 3/4	61 1/8
405 TS	25	54 1/2	11 3/4	24	6	30 3/4	61 1/8
444 TS	25	60 1/2	11 3/4	27	6	31 3/4	66 1/8
445 TS	25	60 1/2	11 3/4	27	6	31 3/4	66 1/8

NOTES:

(1) HM AND HC DIMENSIONS ARE APPROXIMATE AND ARE BASED ON STANDARD OPEN DRIPPROOF MOTORS.

(2) FOR C.C.W. ROTATION, SUCTION AND DISCHARGE WILL BE ON OPPOSITE SIDE THAN SHOWN AND DIMENSIONS WILL BE REVERSED.

(3) * ONLY 1 (ONE) HF SPACE IS USED.

SUCTION AND DISCHARGE FLANGE DIMENSIONS				
125 lb STANDARD				
SIZE	THICK	BOLTS	O.D.	B.C.
4	1 1/4	8-5/8"	10	7 1/2
6	1	8-3/4"	11	9 1/2
250 lb OPTIONAL				
~~4~~	~~1 1/4~~	~~8-3/4"~~	~~10~~	~~7 7/8~~
~~6~~	~~1 7/16~~	~~12-3/4"~~	~~12 1/2~~	~~10 5/8~~

⚠ WARNING

DO NOT OPERATE THIS MACHINE WITHOUT PROTECTIVE GUARD IN PLACE.
ANY OPERATION OF THIS MACHINE WITHOUT A PROTECTIVE GUARD CAN RESULT IN SEVERE BODILY INJURY.

ER 1-10717

			CUSTOMER PUMP & LIGHTING CO.				P.O. 3924012D		Colt Industries — Fairbanks Morse Pump Division
			JOB NAME CAMP LEJEUNE, NC.						SETTING PLAN
			PUMP SIZE & MODEL 4"2876A	STAGES	GPM 545	TDH 95	RPM 1755	ROT CW	4" 2876 A&C
			MOTOR USELEC	HP 20	FRAME 256T	PHASE 3	HERTZ 60	VOLTS 1800	ENCL ODP — MOTOR DRIVE
REV.	DATE	ECN NO.	CERTIFIED FOR K3MI-054804		CERTIFIED BY VL Davidson		DATE 5-1-84		SIZE C — DWG. NO. 24 LYA 2397J

DRAWN BY D. SCHOCK — DATE 9/14/81
CHECKED BY WJT — DATE 9/14/81
ENGINEERING APPROVAL — DATE 9/18/81
MARKETING APPROVAL — DATE
DRAWING NUMBER 24 LYA 2397J

INSTALLATION, OPERATION AND MAINTENANCE INSTRUCTIONS

2800

HORIZONTAL SPLIT CASE PUMPS

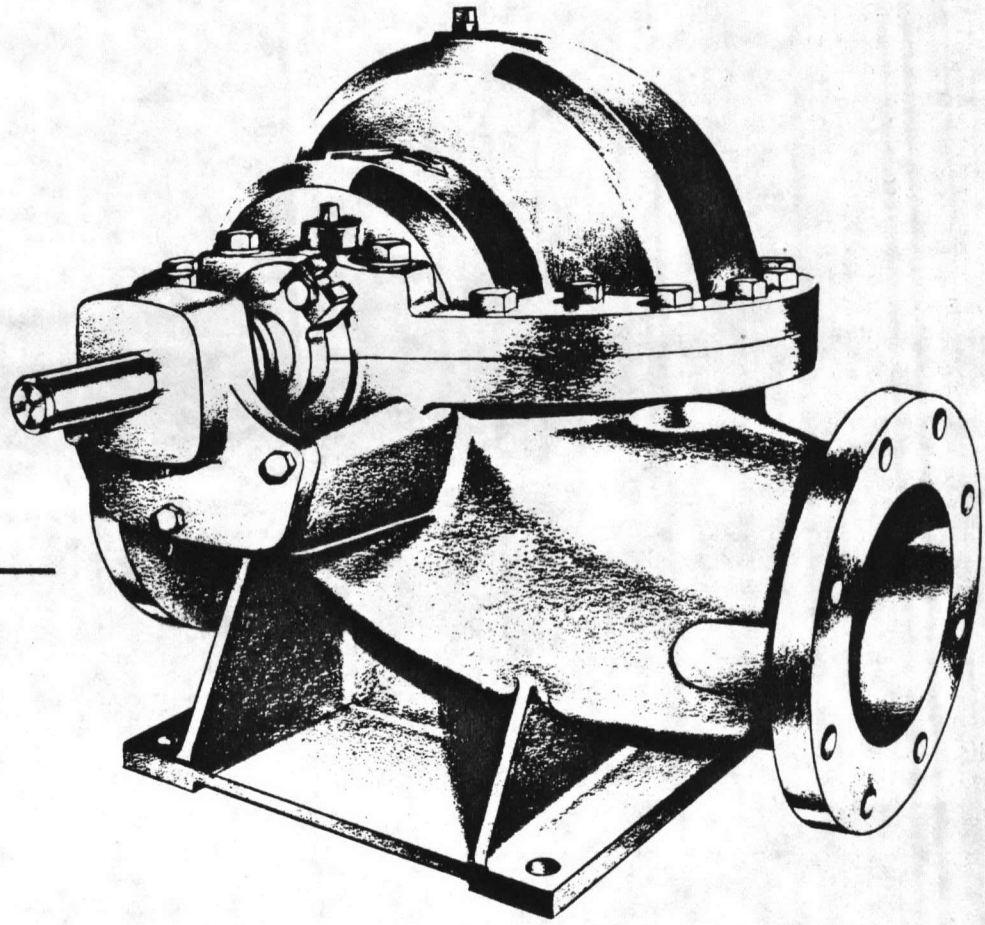

Colt Industries

Fairbanks Morse

2800
TABLE OF CONTENTS

PUMP IDENTIFICATION

Congratulations! You are the owner of one of the finest pumps commercially available. If you give it the proper care as outlined and recommended by this manual, it will provide you with reliable service and long life ...

2800 and 2800F SPLIT CASE PUMPS

Your Fairbanks Morse 2800 is a split case pump with the casing split on the horizontal centerline. This new compact design, with a shorter bearing span, has less deflection under hydraulic load which results in less wear on the sleeves, bearings and packing. It is ideally suited for applications such as water systems, boosters, liquid transfer, irrigation and fire protection systems. These pumps are available with a variety of options, including mechanical seals, impeller wear rings, oil lubricated and water cooled bearings.

This manual applies to:

28XX Horizontal pumps with removable bearing arms

PUMP IDENTIFICATION

Example: 6" 2823AF

- A — Fire pump (all other models use no identification)
- A — Impeller design
- 3 — Medium head (1, 2, 3, 4, 5 or 6 indicate progressively higher head)
- 2 — Indicates 1800 RPM (7 indicates 3600 RPM)
- 2 — Figure (model)
- 6" — Discharge size (inches)

Carefully record all of the following data from your pump nameplate. It will aid in obtaining the correct replacement parts for your pump.

PUMP

FIGURE (MODEL): _____, SERIAL NUMBER: _____

IMPELLER DIAMETER: _____, SIZE: _____

CAPACITY: _____ GPM, TOTAL HEAD: _____ FT., RPM: _____

DRIVER

H.P.: _____ SERIAL NUMBER: _____

FRAME: _____ SPEED: _____ VOLTAGE: _____

To obtain additional data on hydraulics and pump selection and operation, we suggest you obtain both of the following reference books:

1. Fairbanks Morse "Hydraulic Handbook," available from the factory.
2. Hydraulic Institute Standards

   Hydraulic Institute
   1230 Keith Building
   Cleveland, Ohio 44115

STORAGE OF PUMPS AND CAUTION NOTES

THESE INSTRUCTIONS APPLY TO THE PUMP ONLY. THEY ARE INTENDED TO BE GENERAL AND NOT SPECIFIC. IF YOUR OPERATING CONDITIONS EVER CHANGE, ALWAYS REFER TO THE FACTORY FOR REAPPLICATION. ALWAYS REFER TO THE MANUALS PROVIDED BY MANUFACTURERS OF THE OTHER EQUIPMENT FOR THEIR SEPARATE INSTRUCTIONS.

CAUTION
IMPORTANT SAFETY NOTICE

THE INSTALLATION, USE AND OPERATION OF THIS TYPE OF EQUIPMENT IS AFFECTED BY VARIOUS FEDERAL, STATE AND LOCAL LAWS AND THE REGULATIONS CONCERNING OSHA. COMPLIANCE WITH SUCH LAWS RELATING TO THE PROPER INSTALLATION AND SAFE OPERATION OF THIS TYPE OF EQUIPMENT IS THE RESPONSIBILITY OF THE EQUIPMENT OWNER AND ALL NECESSARY STEPS SHOULD BE TAKEN BY THE OWNER TO ASSURE COMPLIANCE WITH SUCH LAWS BEFORE OPERATING THE EQUIPMENT.

STORAGE OF PUMPS

IF THE EQUIPMENT IS NOT TO BE IMMEDIATELY INSTALLED AND OPERATED, STORE IT IN A CLEAN, DRY, WELL VENTILATED PLACE, FREE FROM VIBRATIONS, MOISTURE, AND RAPID OR WIDE VARIATIONS IN TEMPERATURE.

SPECIAL INSTRUCTIONS FOR:

OIL LUBRICATED PUMPS: FILL THE BEARING RESERVOIRS WITH OIL. PRIOR TO START UP, DRAIN THE STORAGE OIL AND FILL THE RESERVOIRS TO THE PROPER LEVEL WITH NEW OIL.

GREASE LUBRICATED PUMPS: ROTATE THE SHAFT FOR SEVERAL REVOLUTIONS AT LEAST ONCE EVERY TWO WEEKS TO:

1. COAT THE BEARING WITH LUBRICANT,
2. RETARD OXIDATION OR CORROSION AND,
3. PREVENT POSSIBLE FALSE BRINELLING.

CONSIDER A UNIT IN STORAGE WHEN:

1. IT HAS BEEN DELIVERED TO THE JOBSITE AND IS AWAITING INSTALLATION.
2. IT HAS BEEN INSTALLED BUT OPERATION IS DELAYED PENDING COMPLETION OF CONSTRUCTION.
3. THERE ARE LONG (30 DAYS OR MORE) PERIODS BETWEEN OPERATION CYCLES.
4. THE PLANT (OR DEPARTMENT) IS SHUT DOWN FOR PERIODS OF LONGER THAN 30 DAYS.

NOTE: STORAGE REQUIREMENTS VARY DEPENDING ON THE LENGTH OF STORAGE, THE CLIMATIC ENVIRONMENT AND THE EQUIPMENT. FOR STORAGE PERIODS OF THREE MONTHS OR LONGER, CONTACT THE MANUFACTURER FOR SPECIFIC INSTRUCTIONS. IMPROPER STORAGE COULD DAMAGE THE EQUIPMENT WHICH WOULD RESULT IN NON-WARRANTY COVERED RESTORATION REQUIREMENTS OR NON-WARRANTY COVERED PRODUCT FAILURES.

STANDARD WARRANTY: Seller warrants products of its own manufacture against defects in materials and workmanship under normal use, and service for one (1) year from date of installation or startup, but not more than eighteen (18) months after date of shipment. Accessories and components not manufactured by Seller are warranted only to the extent of the original manufacturer's warranty. Notice of the alleged defect must be given to Seller in writing with all identifying details including serial number, type of equipment and date of purchase within thirty (30) days of the discovery of same during the warranty period. Seller's sole obligation on this warranty shall be, at its option, to repair or replace or refund the purchase price of any product or part thereof which proves to be defective as alleged. No allowances will be made for repairs or alterations effected without specific written authorization from Seller.

If requested by Seller, such product or part thereof must be promptly returned to the manufacturer prior to any attempted repair; or sent to an authorized service station designated by the manufacturer. All shipping expenses are to be prepaid by the buyer. Seller accepts no responsibility for loss or damage in transit of goods, nor will any warranty claim be considered unless the returned goods are received intact and undamaged as a result of shipment. Repaired or replaced material returned to customer will be shipped F.O.B. the manufacturer's factory.

Seller warrants repaired or replaced parts of its own manufacture against defects in materials and workmanship under normal use and service for ninety (90) days or for the remainder of the warranty on the product being repaired. This warranty applies to the repaired or replaced part and is not extended to the product or any other component of the product being repaired.

Under the terms of this warranty, Seller shall not be responsible nor liable for:

a. Consequential, collateral or special losses or damages.
b. Equipment conditions caused by fair wear and tear, abnormal conditions of use, accident, neglect, or misuse of said equipment.
c. Labor charges, loss or damage resulting from the supplying of defective part(s) or improper repairs by unauthorized person(s).
d. Damage caused by abrasive materials, chemicals, scale deposits, corrosion, lightning, improper voltage or mishandling.

Seller reserves the right to substitute new equipment and/or improve the part(s) on any equipment judged defective without further liability. All repairs and/or services performed by Seller, not adjusted as covered by this warranty, will be charged in accordance with the current equipment and service prices.

This warranty is VOID unless the purchaser provides protective storage, installs and maintains the equipment in accordance with manufacturer's instructions.

Credit will NOT be allowed nor shipment accepted on any part(s) or equipment returned unless prior approval in writing has been obtained.

THIS WARRANTY IS THE SOLE WARRANTY OF SELLER AND ANY OTHER WARRANTIES EXPRESS, IMPLIED IN LAW OR IMPLIED IN FACT, INCLUDING ANY WARRANTIES OR MERCHANTABILITY AND FITNESS FOR USE, ARE HEREBY SPECIFICALLY EXCLUDED.

No employee of the Seller and no agent, dealer or distributor has any authority to change or enlarge the terms of this warranty to obligate the Seller to other than strictly the terms of this written warranty.

LIABILITY LIMITATIONS: Under no circumstances shall the Seller have any liability for liquidated damages or for collateral, consequential or special damages or for loss of profits, or for actual losses or for loss of production or progress of construction, whether resulting from delays in delivery or performance, breach of warranty, negligent manufacture or otherwise. The aggregate total liability of Seller in connection with the performance of this order, whether for breach of contract or warranty, negligence, or otherwise shall in no event exceed the contract price. Buyer agrees to indemnify and hold harmless Seller from all claims by third parties in excess of these limitations.

Since the compliance with the various Federal, State and Local laws and regulations concerning occupational health and safety and pollution are affected by the use, installation and operation of the equipment and other matters over which the Seller has no control, the Seller assumes no responsibility for compliance with those laws and regulations, whether by way of indemnity, warranty or otherwise.

INTRODUCTION

This manual contains information which is the result of carefully conducted engineering and research efforts. It is designed to supply adequate instructions for the safe and efficient installation, operation and maintenance of your pump. Failure or neglect to properly install, operate or maintain your pump may result in personal injury, property damage or unnecessary damage to the pump.

Variations exist in both the equipment used with these pumps and in the particular installation of the pump and driver. Therefore, specific operating instructions are not within the scope of this manual. The manual contains general rules for installation, operation and maintenance of the pump.

Observe all caution or danger tags attached to the equipment or included in this manual.

INSTALLATION

1. GENERAL

CAUTION: CAREFULLY READ ALL SECTIONS OF THIS MANUAL AND ALL OTHER INSTRUCTION MANUALS PROVIDED BY MANUFACTURERS OF OTHER EQUIPMENT SUPPLIED WITH THIS PUMP.

Upon receipt of the shipment, unpack and inspect the pump and driver assemblies and individual parts to insure none are missing or damaged. Carefully inspect all boxes and packing material for loose parts before discarding them. Report immediately to the factory, and to the transportation company involved, any missing parts or damage incurred during shipment, and file your "damaged and/or lost in shipment" claim with the carrier.

Horizontal pump and driver assemblies mounted on a structural steel base are aligned at the factory. However, alignment may be disturbed in transit or during installation. It must be checked after the unit is leveled on the foundation, after the grouting has set and the foundation bolts are tightened, and after piping is completed.

Tapped mounting blocks are furnished with horizontal pumps when the driver is to be field mounted. After the alignment of the driver is completed, the mounting blocks must be welded to the base and the alignment rechecked.

When the pump and driver are mounted on separate base structures, the pump should be leveled and aligned first, and then the driver leveled and lined up with the pump. With separate bases, a flexible shaft between pump and driver must be used.

2. NET POSITIVE SUCTION HEAD (NPSH)

NPSH can be defined as the head (energy) that causes liquid to flow through the suction pipe and enter the eye of the impeller.

NPSH is expressed in two values: (1) NPSH required (NPSHR) and, (2) NPSH available (NPSHA). It is essential that NPSHA always be greater than NPSHR to prevent cavitation, vibration, wear and unstable operation.

NPSHR is a function of the pump design and therefore varies with the make, size, capacity and speed of the pump. The value for your pump can be obtained from your pump performance curve or the factory.

NPSHA is a function of your system and may be calculated as follows:

A. When the source of liquid is above the pump:

NPSHA = barometric pressure (feet) + static suction head (feet) - friction losses in suction piping (feet) - vapor pressure of liquid (feet)

B. When the source of liquid is below the pump:

NPSHA = barometric pressure (feet) - static suction lift (feet) - friction losses in suction piping (feet) - vapor pressure of liquid (feet)

3. MINIMUM SUBMERGENCE OF SUCTION PIPE AND PIT DESIGN

For installations where the pump draws the fluid from a sump, the hydraulic characteristics of the pump, the suction inlet submergence and NPSH must be considered. Generally, it is required that an evenly distributed flow of non-aerated water be supplied to the suction bell. Improper pit design or insufficient suction pipe submergence can result in intake vortexing which reduces the pump's performance and can result in severe damage to the pump.

We recommend that you secure the advice of a qualified Consulting Engineer for the analysis and design of the suction pit. Significant engineering data on design is provided in the Hydraulic Institute Standards.

Upon request, Fairbanks Morse will review plans and give general comments on the installation, but will not approve such plans for a specific installation and will accept no responsibility or liability for the performance of the pump intake structure.

4. LOCATION AND HANDLING

The pump should be installed as near the fluid as possible so a short direct suction pipe can be used to keep suction losses at a minimum. If possible, locate the pump so the fluid will flow to the suction opening by gravity. The discharge piping should be direct and with as few elbows and fittings as possible. The total net positive suction head available (NPSHA), which includes the suction lift and pipe friction losses, must be equal to or greater than the net positive suction head required (NPSHR) by the pump.

The pump and driver should be located in an area that will permit periodic inspection and maintenance. Head room and access should be provided and all units should be installed in a dry location with adequate drainage.

WARNING: DO NOT PICK UP THE COMPLETE UNIT BY THE DRIVER OR PUMP SHAFTS OR EYE BOLTS.

To lift a horizontal mounted unit, a chain or suitable lifting device should be attached to each corner of the base structure. The individual driver may be lifted using the proper eye bolts provided by the manufacturer, but these should not be used to lift the assembled unit.

5. FOUNDATION

The foundation should have a level surface and be of sufficient mass to prevent vibration and form a permanent rigid support for the unit. The most satisfactory foundations are concrete with anchor bolts of adequate size imbedded in the foundation in pipe sleeves with an inside diameter 2½ times larger than the bolt diameter. This will allow for final accurate positioning of the unit.

6. LEVELING OF THE UNIT

Lower the unit onto the foundation, positioning it so the anchor bolts are aligned in the middle of the mounting holes in the base. On all units, always disconnect the coupling halves and never reconnect them until all the alignment operations are complete.

The base should be supported on metal shims or metal wedges placed directly under the part of the base carrying the greatest weight, and spaced close enough to give uniform support and stability (see Figure 1).

Adjust the metal supports or wedges until the shaft of the pump and driver are level. Alignment corrections can be accomplished by adjusting the supports under the base. When proper alignment is obtained, tighten the foundation bolts snugly, but not too firmly, and recheck the alignment before grouting.

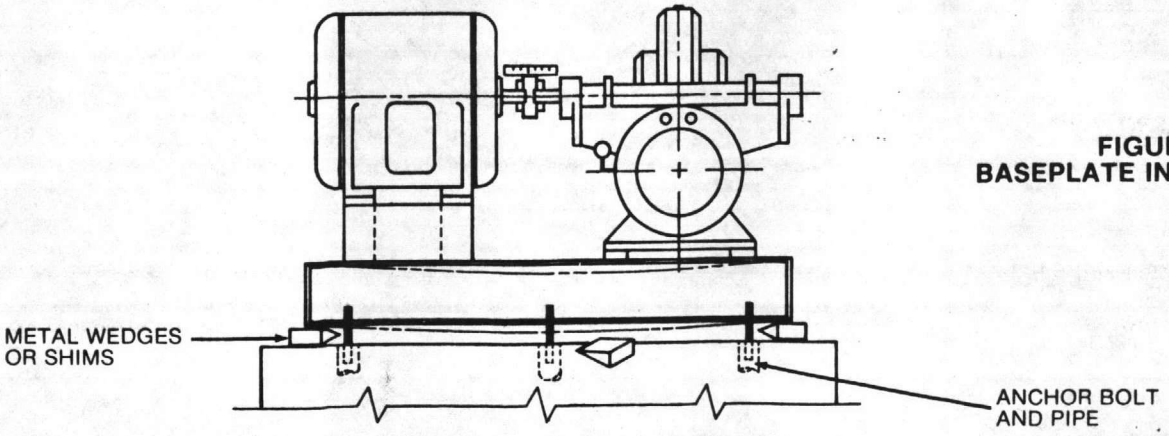

FIGURE 1
BASEPLATE INSTALLATION

7. GROUTING

When the alignment is correct, the unit should be grouted using a high grade nonshrinking grout. The entire base should be filled with grout. Be sure to fill all gaps and voids. **Allow the grout to fully cure before firmly tightening the foundation bolts. Then recheck the alignment before connecting the piping.**

8. PIPING

CAUTION: ALL PIPING CONNECTIONS MUST BE MADE WITH THE PIPE IN A FREE SUPPORTED STATE, AND WITHOUT THE NEED TO APPLY VERTICAL OR SIDE PRESSURE TO OBTAIN ALIGNMENT OF THE PIPING WITH THE PUMP FLANGE.

CAUTION: AFTER ALL THE PIPING IS CONNECTED, THE PUMP AND DRIVER ALIGNMENT MUST BE RECHECKED.

All piping should be independently supported near the pump so that pipe strain will not be transmitted to the pump casing. The suction and discharge piping should be one or two sizes larger than the pump flange sizes, especially where the piping is of considerable length. Any flexible joints installed in the piping must be equipped with tension rods to absorb piping axial thrust. Care must be exercised in arranging elbows not to generate vortexing in the pump inlet.

The suction pipe must be air tight and sloped upward to the pump flange to avoid air pockets which will impair satisfactory pump operation. The discharge pipe should be as direct as possible with a minimum of valves to reduce pipe friction losses.

A check valve and closing valve should be installed in the discharge line and a closing valve in the suction line. The check valve, between the pump and closing valve, protects the pump from water hammer and prevents reverse rotation in the event of power failure. The closing valves are used in priming, starting and when the pump is shut down. The pump must never be throttled by the use of a valve in the suction line.

9. AUXILIARY PIPING CONNECTIONS AND GAUGES

In addition to the primary piping connections, your pump may require mechanical seal and seal filter connections, connections to the lantern ring (see the "stuffing box" and "mechanical seal" sections of this manual), stuffing box drain, discharge and suction flange gauges, or baseplate drain connections. All these lines and gauges should now be installed.

10. CONSTANT LEVEL OILERS — Oil Lubricated Pumps

If your pump has oil lubricated bearings, it will be equipped with constant level oilers which will be shipped loose to prevent damage in shipment. The oilers must be installed in the tapped holes in the side of the bearing housings. To provide proper lubrication, the pipe connecting the oiler to the bearing housing must be level (see Figure 2).

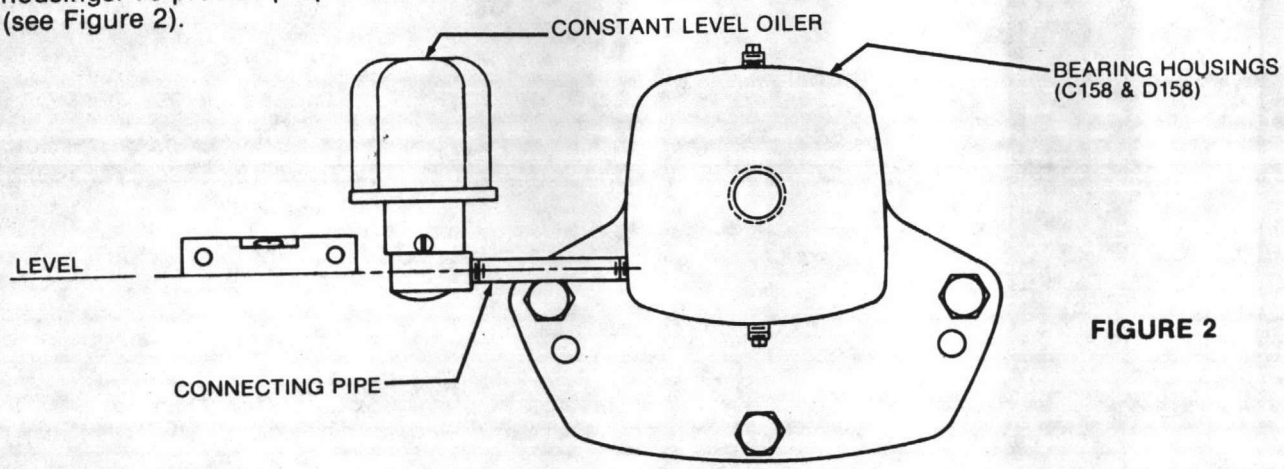

FIGURE 2

When the oiler is level, fill the bottle and screw it onto the lower reservoir of the oiler. Allow the oil to flow into the bearing reservoir. Several fillings of the bottle may be required before the oil level for which the oiler is set is reached and the oil stops flowing. After filling the bearing reservoir, check the oil level to make sure it is as specified in the following table (see page 7).

BEARING HOUSING OIL LEVEL CHART

PUMP FIGURE (Model)	2" 2873	3" 2823 3" 2874	4" 2823 4" 2874 4" 2876 5" 2823 6" 2821 6" 2822 8" 2821	5" 2824 5" 2874 6" 2823 6" 2824 8" 2822 8" 2823 10" 2822	5" 2876 6" 2825 8" 2824 10" 2824 10" 2823
℄ OF SHAFT TO OIL LEVEL	3/4	7/8	1 3/16	1 1/2	1 13/16

Adjust the oil level, if necessary, by loosening the set screws on the side of the dust cap, raising the bottle, and tightening the screws. Refer to the manufacturer's instructions supplied with this manual for specific instructions.

11. FINAL COUPLING ALIGNMENT

The alignment of the coupling must be carefully checked during the installation and as the last step before starting the pump. If realignment is required, the piping should be disconnected first. After aligning, reconnect the piping in accordance with the previous instructions and again recheck the alignment.

A flexible coupling must not be used to compensate for misalignment resulting from poor installation or temperature changes.

Fairbanks Morse pumps are supplied with several different types of commercial couplings. The following instructions apply to units supplied with a Woods coupling. If your unit has a different make coupling, a loose leaf instruction sheet will be attached to this manual and should be thoroughly studied before proceeding.

NOTE: FOR MAXIMUM LIFE, KEEP MISALIGNMENT VALUES AS NEAR TO ZERO AS POSSIBLE.

MAXIMUM ALLOWABLE MISALIGNMENT — WOODS COUPLINGS (Dimensions In Inches)

Sleeve Size	G Dimension	Types E & N		Type H*	
		Parallel	Angular	Parallel	Angular
4	5/8	.005	.021	—	—
5	3/4	.007	.028	—	—
6	7/8	.007	.035	.005	.008
7	1	.010	.040	.006	.010
8	1 1/8	.010	.047	.007	.012
9	1 7/16	.012	.054	.008	.014
10	1 5/8	.012	.064	.010	.016
11	1 7/8	.016	.075	.011	.018
12	2 5/16	.016	.087	.012	.021
13	2 11/16	.020	.092	.015	.025
14	3 1/4	.022	.121	.017	.030
16	4 3/4	.031	.165	—	—

The coupling type is printed on the sleeve.
***Type H sleeves SHOULD NOT be used as direct replacements for EPDM or Hytrel sleeves.**

A. Use a blunt screwdriver to slip the wire ring out of its groove and remove the two piece sleeve.

Check the G dimension. If it is not as listed in the preceeding table, loosen one flange of the coupling and reposition it to achieve the specified G dimension.

NOTE: On a sleeve bearing electric motor, the armature should be at it's electrical center when the G dimension is measured.

B. Check parallel alignment by placing a straightedge across the two coupling flanges and measuring the maximum offset at various points around the periphery of the coupling. **DO NOT ROTATE THE COUPLING.** If the maximum offset exceeds the figure shown under "Parallel" in the preceeding table, realign the coupling.

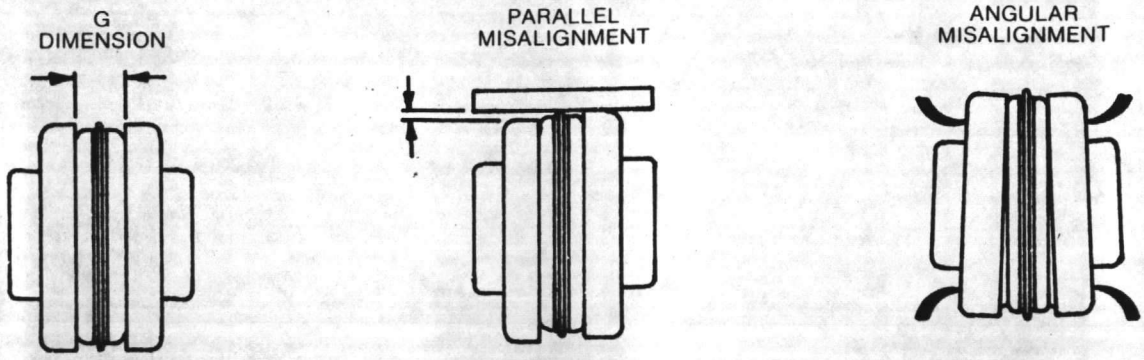

11. FINAL COUPLING ALIGNMENT (continued)

C. Check angular alignment with a micrometer or caliper. Measure from the outside of one flange to the outside of the other at intervals around the periphery of the coupling. Determine the maximum and minimum dimensions. **DO NOT ROTATE THE COUPLING.** The difference between the maximum and minimum must not exceed the figure shown under "Angular" in the preceeding table. If a correction is required, you must recheck the parallel alignment.

D. If the coupling employs the two-piece sleeve with the wire ring, force the ring into its groove in the center of the sleeve. It may be necessary to pry the ring into position with a blunt screwdriver.

WARNING: CHECK SAFETY CODES, AND ALWAYS INSTALL PROTECTIVE GUARD OR SHIELD AS REQUIRED BY THE VARIOUS FEDERAL, STATE, AND LOCAL LAWS AND THE REGULATIONS CONCERNING OSHA.

WARNING: COUPLING SLEEVES MAY BE THROWN FROM THE ASSEMBLY WHEN SUBJECTED TO A SERVICE SHOCK LOAD.

12. DOWELLING

After the piping is connected and the final coupling alignment completed, the pump and driver should be drilled, reamed and dowelled to the baseplate using a minimum of two dowels each for the pump and driver.

13. FLEXIBLE SHAFTING ALIGNMENT

For installation and alignment of intermediate flexible shafting, refer to the manufacturer's manual.

14. ROTATION

Before connecting the coupling halves, bump start the driver and verify rotation is in the proper direction. The correct pump rotation is indicated by a directional arrow on the pump casing.

15. MECHANICAL SEALS

CAUTION: DRY OPERATION OF THE PUMP MAY CAUSE DAMAGE TO THE MECHANICAL SEAL AND IMPELLER.

These pumps can be supplied with optional single face mechanical seals. Mechanical seals are installed and adjusted in the factory and require no further adjustments in the field.

For further information, refer to the seal manufacturer's instructions supplied with this manual.

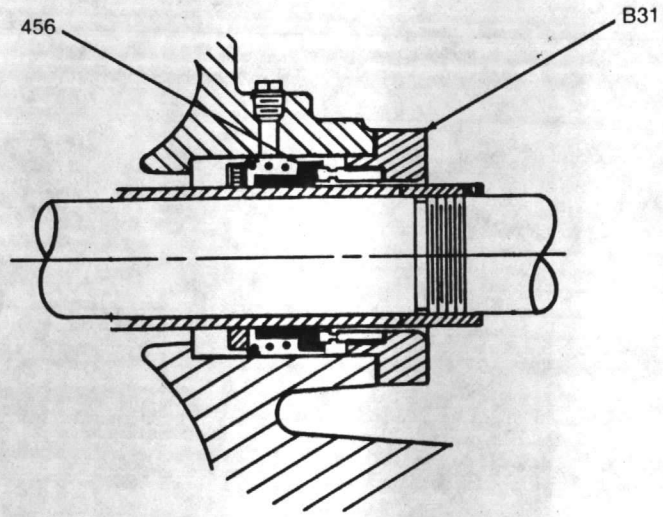

FIGURE 6
TYPICAL MECHANICAL SEAL

Because variations may exist in both the equipment used with these pumps, and in the particular installation of the pump and driver, specific operating instructions are not within the scope of this manual. However, there are general rules and practices that apply to all pump installations and operation.

CAUTION: BEFORE STARTING OR OPERATING THE PUMP, READ THIS ENTIRE MANUAL, ESPECIALLY THE FOLLOWING INSTRUCTIONS:

A. BEFORE STARTING THE PUMP, INSTALL CLOSED GUARDS AROUND THE COUPLING.

B. BEFORE STARTING THE PUMP, ROTATE THE UNIT OR ASSEMBLY BY HAND TO ASSURE ALL MOVING PARTS ARE FREE.

C. OBSERVE ALL CAUTION OR DANGER TAGS ATTACHED TO THE EQUIPMENT.

D. NEVER RUN THE PUMP DRY AS THE CLOSE RUNNING FITS WITHIN THE PUMP ARE WATER LUBRICATED. RUNNING DRY MAY RESULT IN PUMP SEIZURE.

E. BEFORE STARTING THE PUMP, FILL THE CASING AND SUCTION LINE WITH LIQUID. THE PUMP MAY BE PRIMED BY USING AN EJECTOR OR VACUUM PUMP.

F. BEFORE STARTING A PACKED BOX PUMP, ADJUST THE PACKING GLAND SO THERE IS SUFFICIENT LEAKAGE TO LUBRICATE THE PACKING AND ASSURE A COOL STUFFING BOX (SEE MAINTENANCE INSTRUCTIONS).

G. IF EXCESSIVE VIBRATION OR NOISE OCCURS DURING OPERATION, SHUT THE PUMP DOWN AND CONSULT A FAIRBANKS MORSE REPRESENTATIVE.

1. OPERATING AT REDUCED CAPACITY

Although these pumps are applicable over a wide range of operating conditions, care should be exercised when doing so, especially when the actual conditions differ from the sold for conditions. You should always contact your nearest Fairbanks Morse sales office before operating the pumps at any condition other than that for which they were sold.

2. PRIMING

Since the pumped medium is used to lubricate various internal parts, running a centrifugal pump dry can result in extensive damage and possible seizing. It is therefore imperative that the pump be primed prior to initial start up and that that prime be maintained through subsequent start-stop cycles.

The priming procedure is different for positive and negative suction head systems and the following procedures should be followed:

A. Positive suction head —

1. Open the vent on the highest point on the pump casing.
2. Open all suction valves.
3. Allow the liquid to flow from the vent hole until all air bubbles are vented, and then close the vent.
4. The pump is now primed.

B. Negative suction head —

1. Install an ejector or vacuum pump on the vent on the highest point on the pump casing.
2. Close the discharge valve.
3. Open the suction valve.
4. Start ejector or vacuum pump.
5. Allow the liquid to flow until a continuous flow is exhausted from the ejector, and then close the valve to the vent.
6. The pump is now primed.

3. STARTING THE PUMP

A. After the pump is primed, and with the discharge valve closed and the suction valve open, start the driver according to the driver manufacturer's instructions.

B. Open the discharge valve slowly to prevent water hammer.

3. STARTING THE PUMP (continued)

C. After the pump has been started, check bearing temperature, stuffing box lubrication and operation and pump noise level for a period of several hours.

CAUTION: START THESE CHECKS IMMEDIATELY ON STARTING THE PUMP AND CONTINUOUSLY MONITOR THEM FOR THE FIRST SEVERAL HOURS OF OPERATION.

4. BEARING OPERATING TEMPERATURE

These pumps are designed to operate over a wide ambient temperature range. The bearing temperature, when measured on the outside surface of the bearing housing, should not exceed 190°F. Temperatures in excess of 190°F may indicate a lack of lubricant, bearing overload or incipient bearing failure. If the temperature exceeds this limit, the pump should be stopped and the cause investigated and corrected.

5. TROUBLESHOOTING OPERATING PROBLEMS

If you have followed the installation and start up procedures outlined in this manual, your pump should provide reliable service and long life. However, if operating problems do occur, significant time and expense can be saved if you use the following check list to eliminate the most common causes of those problems.

INSUFFICIENT DISCHARGE PRESSURE OR FLOW

1. Pump not primed.
2. Speed too low. Check driver.
3. Discharge head too high.
4. Suction lift too high.
5. Wrong direction of rotation.
6. Air leaks into suction piping, stuffing box or gaskets.
7. Impeller passage partially plugged.
8. Impeller damaged.
9. Impeller running clearance too large.
10. Insufficient suction line submergence.
11. Air in liquid.
12. Impeller diameter too small.
13. Insufficient net positive suction head.

LOSS OF SUCTION DURING OPERATION

1. Suction line leaks.
2. Water seal line plugged.
3. Suction lift too high.
4. Air or gases in liquid.
5. Air leaks into suction piping, stuffing box or gaskets.
6. Wrong direction of rotation.
7. Insufficient suction line submergence.

EXCESSIVE POWER CONSUMPTION

1. Speed too high.
2. Head lower than rating, pumps too much liquid.
3. Specific gravity or viscosity of liquid pumped is too high.
4. Mechanical defects:
   - *Shaft bent.
   - *Rotating element binds.
5. Misalignment.
6. System head lower than design.
7. Incorrect diameter impeller.

VIBRATION OR NOISE

1. Misalignment between driver and pump.
2. Foundation bolts loose or defect in grouting.
3. Mechanical defects:
   - *Shaft bent.
   - *Rotating element binds.
4. Head lower than rating, pumps too much liquid.
5. Pipe strain — improperly supported or aligned.
6. Pump running at shut-off condition.
7. Insufficient suction line submergence
8. Air in liquid.

OVER-HEATING

1. Bearings:
   - *Excessive grease.
   - *Shaft bent.
   - *Rotating element binds.
   - *Pipe strain.
   - *Insufficient bearing lubrication.
   - *Incorrect type grease.
2. Packing box:
   - *Packing gland too tight.
   - *Water seal line plugged.
   - *Air not vented out of mechanical seal.
   - *Flushing water not circulating for mechanical seal.

1. MAINTENANCE HISTORY

DATE	MAINTENANCE PERFORMED	PART(S) USED	SYMBOL NUMBER(S)

2. INSPECTIONS AND PREVENTATIVE MAINTENANCE REQUIREMENTS

To assure satisfactory operation of the pump, daily inspections and periodic maintenance are required. We suggest that an inspection and maintenance log be kept and that the inspector immediately report any problems. A guide for preventative maintenance for normal applications is given below. Unusual applications with abnormal heat, moisture, dust, etc., may require more frequent inspections and service.

ITEM	ACTION REQUIRED	FREQUENCY (HOURS OF OPERATION)
Packing Box	Adjust gland, inspect packing for possible replacement	150 hours
Pump Alignment	Check for change in alignment	ANNUALLY
Vibration	Check for change in vibration	ANNUALLY
Bearings	Lubricate	
Grease lubricated		Every 2,000 hours of operation, but at least once a year
Oil lubricated		As required to maintain proper level — drain & replace oil every 2,000 hours of operation, but at least once a year.

3. BEARING LUBRICATION

A. Grease Lubricated Bearings

Under normal operating conditions, the bearings must be lubricated after every 2,000 hours of running time, but at least once a year regardless of total operating hours.

CAUTION: ANY APPLICATION WITH ABNORMAL HEAT, MOISTURE, DUST, ETC., MAY REQUIRE A CHANGE IN THIS SCHEDULE AND YOU SHOULD REFER TO A LUBRICATION ENGINEER OR THE FACTORY FOR SPECIFIC INSTRUCTIONS.

CAUTION: THE GREASES RECOMMENDED IN THIS MANUAL WILL PROVIDE SATISFACTORY LUBRICATION OVER A WIDE TEMPERATURE RANGE. THERE IS, HOWEVER, A PRACTICAL LIMIT, AND OPERATION OF THE PUMP SHOULD BE DISCONTINUED AND THE FACTORY CONSULTED IF THE TEMPERATURE, WHEN MEASURED ON THE OUTSIDE OF THE BEARING HOUSING, EXCEEDS 190°F.

RECOMMENDED GREASE: N.L.G.I. No. 2 lithium base multi-purpose with a mineral oil viscosity of 950-1250 SUS at 100°F., and 80-82 SUS at 210°F.

Proceed as follows for bearing lubrication:

WARNING: KEEP HANDS, FINGERS, CLOTHING AND ANY TOOLS AWAY FROM THE COUPLING. FAILURE TO DO SO COULD RESULT IN SERIOUS PERSONAL INJURY.

1. Stop the pump and remove the pipe plug at the bottom of the bearing housing.
2. Connect a grease gun to the lubrication fittings.
3. Inject grease until it relieves at the bearing housing cover and drain hole.
4. Remove the grease gun.
5. Start the pump. NOTE: Immediately after lubrication, bearing temperatures may rise above the normal level. Continue running the unit until bearing temperatures stabilize at the normal level.
6. Stop the unit, wipe off the relieved grease and replace the drain plug.
7. Start the unit and resume normal operation.

B. Oil Lubricated Bearings

Fill the constant level oiler and add additional oil as required. Replace the old oil with new every 2,000 hours, but at least once a year. Drain the oil by removing the plug at the bottom of the bearing housings (C158 and D158).

3. BEARING LUBRICATION (continued)

Check the oiler setting periodically to insure the setting is correct. Refer to the following table for correct setting.

BEARING HOUSING OIL LEVEL CHART

PUMP FIGURE (Model)	2" 2873	3" 2823 3" 2874	4" 2823 4" 2874 4" 2876 5" 2823 6" 2821 6" 2822 8" 2821	5" 2824 5" 2874 6" 2823 6" 2824 8" 2822 8" 2823 10" 2822	5" 2876 6" 2825 8" 2824 10" 2824 10" 2823
℄ OF SHAFT TO OIL LEVEL	3/4	7/8	1 3/16	1 1/2	1 13/16

RECOMMENDED OILS: The oil used should be a non-detergent type containing rust and oxidation inhibitors, supplied by a reputable manufacturer.

Depending on bearing/pump operating temperature, the grade and viscosity should be as follows:

Below 120°F — ISO Vg Grade 40-70 (SAE 20)
120°F to 250°F — ISO Vg Grade 70-100 (SAE 30)
Above 250°F — Consult the factory for a recommendation.

4. STUFFING BOX

CAUTION: DO NOT TIGHTEN THE GLAND TO STOP ALL LEAKAGE. LEAKAGE IS NECESSARY TO INSURE THE COOLING, FLUSHING AND LUBRICATION OF THE PACKING AND TO PREVENT SHAFT SLEEVE DAMAGE.

The stuffing boxes on Fairbanks Morse pumps are packed at the factory. All packing is subject to wear and should be given regular inspections and, if necessary, periodic adjustments. Generally, packed box pumps require inspection of the packing and adjustment of the gland after each 150 hours of operation.

Adjustment is accomplished by lightly tightening the gland nuts, and then loosening them so they can be adjusted with finger pressure to allow a small flow of liquid to lubricate the packings. If the flow of liquid has increased and cannot be reduced by a slight tightening of the gland, add one ring of packing to the stuffing box and readjust the gland. If this fails to reduce the flow, replace the packing and/or shaft sleeve.

The stuffing boxes may be fitted with water seal rings. When a seal ring is furnished, the sealing chamber should be connected to a source of clear, fresh water.

5. PACKING REPLACEMENT

Use a good grade of soft, square, long fiber packing, thoroughly graphited. The replacement procedure should be as follows:

A. Stop the pump.

B. Unbolt and remove the glands away from the packing.

C. Use a packing hook to remove the worn packing and water seal rings. Note the location of the water seal rings relative to the amount of packing on each side of the rings. (See sectional drawings, page 25.)

D. Clean the packing boxes and shaft sleeves.

E. Inspect the shaft sleeves for wear or rough finish and replace if necessary.

F. Install the new packing and water seal rings.

CAUTION: STAGGER THE PACKING END JOINTS 180° AND FIRMLY SEAT THE PACKING. THE FOLLOWING TABLE GIVES THE PERTINENT STUFFING BOX, SEAL CAGE AND PACKING DIMENSIONS (see page 14).

5. PACKING REPLACEMENT (continued)

	PUMP FIGURE (Model)					
	2" 2873	3" 2823	3" 2874	4" 2823 4" 2874 4" 2876 5" 2823 6" 2821 6" 2822 8" 2821	5" 2824 5" 2874 6" 2823 6" 2824 8" 2822 10" 2822	5" 2876 6" 2825 8" 2824 10" 2824 10" 2823
STUFFING BOX						
O.D. Sleeve	1 5/8	2	2	2 1/2	3	3 1/2
I.D. Box	2 7/16	2 15/16	2 15/16	3 9/16	4 3/16	4 13/16
Box Depth	2 15/16	3 3/8	2 15/16	3 7/8	4 5/16	4 3/4
PACKING SIZE	3/8	7/16	7/16 x 3/8	1/2	9/16	5/8
RINGS OF PACKING PER BOX (No Seal Cage)	7	7	7	7	7	7
SEAL CAGE WIDTH	3/4	3/4	3/4	1	1 1/8	1 1/4
PACKING ARRANGEMENT WITH WATER SEAL RING (Packing Rings-Seal Cage-Packing Rings)*	2-C-3	2-C-3	2-C-3	2-C-3	2-C-3	2-C-3

*(See sectional drawings on page 25.)

G. Reinstall the gland and tighten the gland nuts.

H. Loosen the gland nuts so they can be adjusted with finger pressure to obtain correct leakage for lubrication after start-up.

6. PUMP DISASSEMBLY

CAUTION: READ THIS ENTIRE DISASSEMBLY PROCEDURE AND REFER TO THE SECTIONAL DRAWINGS IN THIS MANUAL BEFORE PROCEEDING.

Major maintenance will require disassembly of the pump. The following are step by step instructions.

A. Lock out the power to the driver and close the suction and discharge valves. Drain the pump, disconnect and remove the coupling or flexible shafting. Disconnect and remove all auxiliary piping to the upper casing (3) and bearing housings (C158 and D158) (stuffing box injection line, lubricators on oil lubricated pumps, cooling water lines on pumps with cooled bearings, etc.).

B. Remove the capscrews (2A) securing the upper casing half (3) to the lower half (2). Remove the gland nuts (31B) and slide the glands (A31 or B31) off the gland studs (31A). Install jackscrews in the tapped holes in the upper half casing flange and use them to separate the flanges. Carefully lift the upper casing half using the long shank eyebolts in the tapped holes in the upper casing half.

CAUTION: THE USE OF A CRANE OR HOIST OF ADEQUATE CAPACITY IS RECOMMENDED. THE LIFTING HOOK SHOULD BE NO LESS THAN 3-4 FEET ABOVE THE EYE OF THE EYEBOLTS TO AVOID BENDING OF THE BOLTS. THE USE OF THE SHORT EYEBOLTS IS NOT RECOMMENDED SINCE THE UPPER CASING HALF WILL TEND TO TIP WHILE BEING LIFTED, RESULTING IN POSSIBLE DAMAGE.

C. Remove the capscrews (158B) and pins (158A) that secure the bearing housings (158) to the lower casing. The pins may be removed using the threaded holes in the pins.

D. Lift the rotor assembly from the lower casing using a double rope sling.

WARNING: BE CAREFUL WHEN POSITIONING THE ROPES TO AVOID THE ROTOR SLIPPING AND CAUSING POSSIBLE SERIOUS PERSONAL INJURY.

6. PUMP DISASSEMBLY (continued)

E. Remove the capscrews (159D) that secure the bearing housing covers (159) to the bearing housings and remove the housings from the rotating assembly.

F. Remove the outer snap ring (345) from the outboard bearing end of the rotating assembly, and use a wheel/bearing puller to remove the outboard (168) and inboard (163) bearings.

WARNING: TO PREVENT POSSIBLE SERIOUS PERSONAL INJURY, EXTREME CARE SHOULD BE EXERCISED TO SELECT THE PROPER PULLER AND APPROVED SAFETY GLASSES SHOULD BE WORN.

CAUTION: BECAUSE OF POSSIBLE DAMAGE OR CONTAMINATION DURING REMOVAL, BEARINGS SHOULD NOT BE REUSED AND NEW BEARINGS SHOULD ALWAYS BE INSTALLED.

G. Remove bearing housing covers (159), water deflectors (126), casing wearing rings (16), water seal rings (10) and packing (212). If the pump is equipped with mechanical seals (456), refer to the seal manufacturer's instructions supplied with the pump.

If the pump is equipped with an oil lubrication system, remove the lip seals (158C) from the inboard and outboard bearing housing covers and the inboard bearing housing.

H. Remove the shaft sleeves (A14 or B14). Depending on the pump service, shaft sleeves are supplied in two different configurations. The removal procedure for each configuration differs:

Sleeves Affixed With Loctite: Remove the shaft sleeve nuts (213) (if they are provided), heat the sleeves to approximately 450°F to break the bond and then tap them with a brass or copper mallet.

WARNING: TO PREVENT POSSIBLE SERIOUS PERSONAL INJURY, HEAT RESISTANT GLOVES MUST BE WORN WHEN HANDLING HEATED PARTS.

Sleeves Keyed To Shaft: Remove the shaft sleeve nuts (213), shaft sleeves (B14) and the shaft sleeve o-rings (452).

CAUTION: BECAUSE OF POSSIBLE DAMAGE DURING DISASSEMBLY, O-RINGS SHOULD NOT BE REUSED AND NEW O-RINGS SHOULD ALWAYS BE INSTALLED.

I. Slide the impeller (1) off the shaft (4) and remove the impeller key (102).

J. If your pump has impeller wear rings (17) and if they require replacement, they will be secured by one of two methods, and you should proceed as follows:

Wearing Rings Secured With Loctite: Heat the rings to approximately 450°F to break the bond and then tap them with a brass or copper mallet. If heating fails to affect removal, the rings may be ground off.

Wearing Rings Secured With Set Screws: Remove the set screws (17A) and chisel cut or grind the rings in two at the set screw hole location.

WARNING: TO PREVENT POSSIBLE SERIOUS PERSONAL INJURY, HEAT RESISTANT GLOVES MUST BE WORN WHEN HANDLING HEATED PARTS.

WARNING: TO PREVENT POSSIBLE SERIOUS PERSONAL INJURY, EXTREME CARE SHOULD BE EXERCISED TO SELECT THE PROPER GRINDING EQUIPMENT AND APPROVED SAFETY GLASSES SHOULD BE WORN WHEN GRINDING.

K. The pump disassembly is now complete. All parts should be thoroughly cleaned and inspected for wear or damage and replaced if required.

7. PUMP ASSEMBLY

CAUTION: READ THIS ENTIRE PROCEDURE BEFORE PROCEEDING.

The following are step by step instructions for assembly of the pump and are essentially the reverse order of the instructions for disassembly.

A. Thoroughly clean all parts to remove all oil, grease and any foreign material, and inspect for wear or damage and replace if required. Remove all parts to a clean and dust-free location for assembly. Gaskets, grease seals and bearings should not be reused and should always be replaced with new parts.

B. If the impeller wear rings (17) require replacement, they are a light press fit and will be secured by one of the following methods. You should proceed as follows:

Rings Secured With Loctite: Apply a light film of Loctite No. 290 to the impeller part of the impeller/wear ring fit and install the rings.

Rings Secured With Set Screws: Press the rings in place and drill and tap them using the same size and number of set screws as originally provided. The new holes should be 15° to 20° from the old holes. Install and tighten the set screws.

CAUTION: BE CAREFUL NOT TO DRILL THROUGH THE IMPELLER AND BE SURE TO PRESS THE WEAR RINGS COMPLETELY IN PLACE. THEY SHOULD BE FIRMLY BUTTED AGAINST THE CORRESPONDING IMPELLER SHOULDER.

C. Install the impeller key (102) in the shaft (4) and slide the impeller (1) over the key centering it between the shaft shoulders as shown in Figure 7.

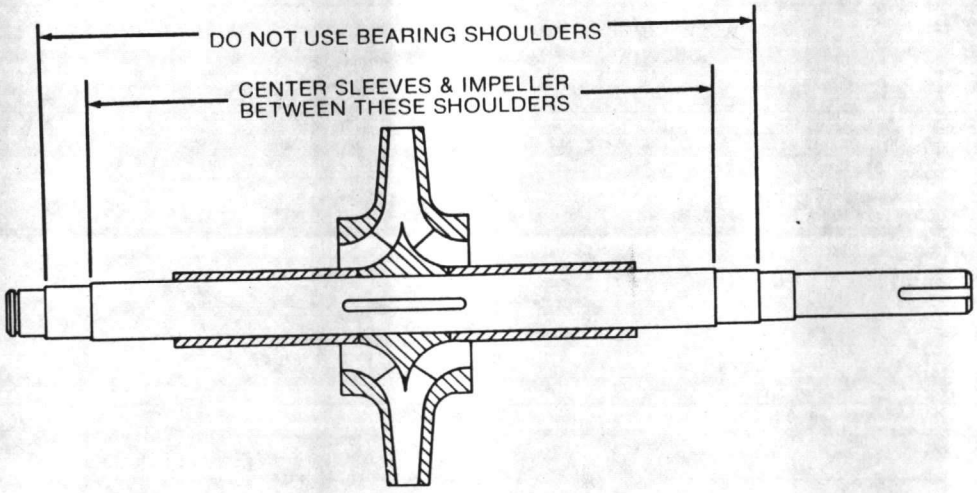

FIGURE 7

CAUTION: IF THE SHAFT SLEEVES ON YOUR PUMP ARE SECURED WITH LOCTITE ONLY, REFER TO THE SHAFT SLEEVE INSTALLATION INSTRUCTIONS BEFORE INSTALLING THE IMPELLER.

D. Install the shaft sleeves (A14 or B14), shaft sleeve nuts (213) and o-rings (452), if your pump uses them, on the shaft. The shaft sleeves will be secured by one of three methods and you should proceed as follows:

Sleeves Secured With Loctite And Sleeve Nuts: Apply two beads of Loctite No. 601 around the shaft on the shaft/shaft sleeve fit, one approximately 2 inches from the impeller hub and the second at the threaded end. Slide the shaft sleeves part way onto the shaft and rotate them at least one full revolution to evenly spread the Loctite, then slide the sleeves over the shaft until they butt firmly against the impeller hub. Install and tighten the shaft sleeve nuts (213) and the set screws (213A).

7. **PUMP ASSEMBLY (continued)**

Sleeves Secured With Loctite Only: Clean the shaft, the bore of the sleeves and the bore of the impeller with Loctite "Safety Solvent" #75559.

Install the impeller key in the shaft and coat the impeller area of the shaft with Loctite 601 and press the impeller onto the shaft, centering it between the shoulders as shown in Figure 7.

Coat the shaft on the shaft/shaft sleeve fit and the bore of the sleeves with Loctite 601. Slide the sleeves part way onto the shaft and rotate them at least one full revolution to evenly spread the Loctite, then slide the sleeves over the shaft until they butt firmly against the impeller hub. Check the sleeve location again and let the Loctite cure for 8 hours before completing the pump assembly.

Sleeves Installed With O-Rings: Slide the shaft sleeves over the shaft until they engage the key and butt firmly against the impeller hub. Install the o-rings in the outboard shaft sleeve nut end of the sleeve and tighten the shaft sleeve nuts and set screws.

CAUTION: THE LINEAR POSITION OF THE IMPELLER MUST BE OBTAINED AND THE SHAFT SLEEVES MUST BE PROPERLY LOCATED. REFER TO FIGURE 7 ON PAGE 17 OF THIS MANUAL. IF PROVIDED, SHAFT SLEEVE NUTS MUST BE TIGHTENED WITHIN 10 MINUTES AFTER THE LOCTITE IS APPLIED. TO ACCOMPLISH LINEAR POSITIONING OF THE IMPELLER, LEAVE AN EQUAL AMOUNT OF SHAFT OR SHAFT THREADS EXPOSED ON EACH END OF THE SHAFT AFTER THE ASSEMBLY IS COMPLETED. ALLOW 4 HOURS FOR THE LOCTITE TO CURE BEFORE COMPLETING THE PUMP ASSEMBLY.

CAUTION: THIS PUMP MAY BE SUPPLIED IN SEVERAL DIFFERENT CONFIGURATIONS. EACH USES DIFFERENT BEARING COVERS AND HOUSINGS WITH DIFFERENT DRAWING REFERENCE NUMBERS. DESPITE THE FOLLOWING INSTRUCTIONS, ALWAYS REFER TO THE SECTIONAL DRAWINGS CONTAINED IN THIS MANUAL BEFORE PROCEEDING, TO INSURE YOU HAVE INSTALLED ALL REQUIRED LIP SEALS, O-RINGS, ETC.

E. If your pump is oil lubricated, install the lip seals (159C) in the outboard and inboard bearing covers (B159) and the lip seal (158C) in the inboard bearing housing (C158). Assemble the o-rings (159A) on the bearing covers prior to installing the bearings.

F. If your pump is equipped with mechanical seals or solid packing glands, install the seals (156) and mechanical seal glands (B31) or solid packing glands before proceeding. Refer to the seal manufacturer's instructions supplied with your pump.

G. Install the water deflectors (126) on each end of the shaft.

H. Install the outboard and inboard bearing covers (A159 or B159) on the shaft.

I. Install the outboard (168) and inboard bearings (163).

WARNING: TO PREVENT POSSIBLE SERIOUS PERSONAL INJURY AND DAMAGE TO THE BEARINGS, PRESSURE SHOULD BE APPLIED TO THE INNER BEARING RACE ONLY.

NOTE: The pump is designed to have a .000 to .001 interference fit between the bearings and the shaft.

J. Install the snap ring (345) on the outboard end of the shaft. Pack both bearings approximately one-half full of a lithium base NGLI2 all-purpose bearing grease.

K. Install the bearing housings (A158 and B158 if grease lubricated, or C158 and D158 or E158 and F158) over the bearings and securely bolt the bearing covers to the bearing housings using the appropriate capscrews (159D).

L. Using a double rope sling, carefully lower the rotor assembly into position in the lower casing (2).

WARNING: BE CAREFUL WHEN POSITIONING THE ROPES TO AVOID THE ROTOR SLIPPING AND CAUSING POSSIBLE SERIOUS PERSONAL INJURY.

CAUTION: WHEN LOWERING THE ROTOR, BE CAREFUL TO PROPERLY POSITION THE WEARING RINGS. FAILURE TO DO SO COULD SERIOUSLY DAMAGE THE RINGS.

7. PUMP ASSEMBLY (continued)

M. Attach the bearing housings to the lower casing, using the appropriate dowel pins (158A) and capscrews (158B).

CAUTION: BE SURE THE BEARING HOUSING/CASING MATING SURFACES ARE CLEAN AND FREE FROM BURRS, AS THIS WILL AFFECT ALIGNMENT OF THE ROTOR/CASING.

N. Inspect the upper casing (3) to assure the water passage is clean and free from foreign material. Apply a light coat of grease to the upper and lower casing mating surfaces and install a new casing gasket (157) on the lower casing, making sure the holes are aligned. Position the pins in the casing wearing rings to align with the slots in the lower casing. Lower the upper casing into position, install the casing alignment pins (2B) and securely bolt the upper and lower casing together using the capscrews (2A).

O. Install the packing (212), water seal rings (10), split glands (19), and gland nuts (31B).

The pump assembly is now complete except for packing adjustment, which should be accomplished after the pump is installed, primed and started up. Refer to the maintenance section of this manual for specific packing adjustment instructions.

ORDERING PARTS

There are a variety of options available for this pump. When ordering parts, give pump serial number, size, and figure number and a complete description and item number of each part. Refer to the drawing and parts list in the back of this manual. You may order parts from your local Fairbanks Morse Distributor or directly from the factory. Consult your local telephone yellow pages for the office nearest you.

RETURNING PARTS

Unnecessary delays and wasted effort will be avoided if you use the proper procedure to return parts or equipment. All materials or parts returned to the factory must have prior approval and a "Returned Goods Tag".

Contact your nearest Fairbanks Morse distributor, listing the material to be returned and the reasons for the return. He will contact the factory to obtain the required approval and "Returned Goods Tag". All material to be returned should be carefully packed to avoid damage in route from rough handling or exposure to weather. The "Returned Goods Tag" will give shipping instructions. All material to be returned freight prepaid.

Fairbanks Morse makes improvements on its products from time to time and reserves the right to furnish improved parts for repairs. A part that is received and is not identical in appearance, or has a different symbol from the original part, may be interchangeable. Examine the part carefully before contacting your Fairbanks Morse representative. The parts should never be returned to the factory without first obtaining proper authorization from your Fairbanks Morse representative.

RECOMMENDED SPARE PARTS
For Normal Duty:

REF. NO.	DESCRIPTION
10	SLEEVE, SHAFT
14	SLEEVE SHAFT
16	WEAR RINGS, CASING
17	WEAR RINGS, IMPELLER (IF ON ORIGINAL CONSTRUCTION)
163	BEARING, INNER
168	BEARING, OUTER
212	PACKING (OR MECHANICAL SEAL)
	GASKETS, COMPLETE SET

For Severe Duty, Add The Following:

REF. NO.	DESCRIPTION
	COMPLETE ROTATING ASSEMBLY

8/82

HYDRAULIC INSTITUTE 1917 MEMBER

PUMP & LIGHTING CO.
ENGINEERED PRODUCTS DIV.
P. O. BOX 2504
HICKORY, NC 28603

HEADQUARTERS OFFICE AND MAIN PLANT

KANSAS CITY
3601 Fairbanks Avenue
Kansas City, Kansas 66110
(913) 371-5000

CONSULT YOUR LOCAL TELEPHONE DIRECTORY
FOR THE WARRANTY SERVICE CENTER OR DISTRICT SALES OFFICE NEAREST YOU.

Colt Industries

Fairbanks Morse
Pump Division

HORIZONTAL MOTORS

DIMENSIONS

FRAMES 182T THRU 286T -- TYPE A (OPEN DRIPPROOF)

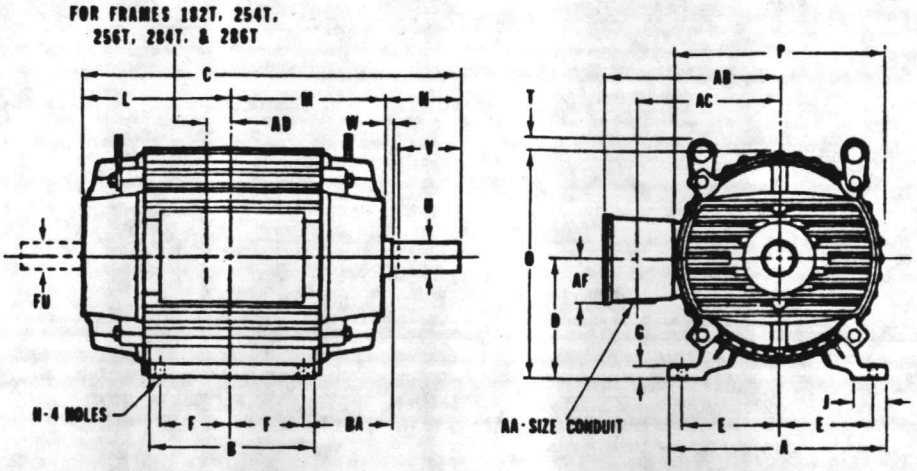

OPTIONAL ASSEMBLY POSITIONS

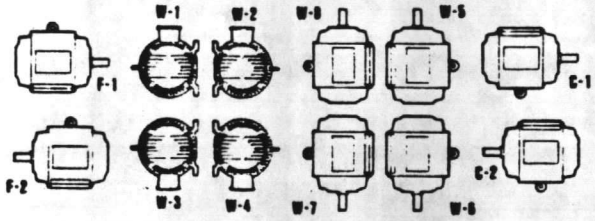

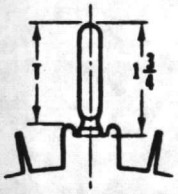

FRAME 280 ONLY

ALL DIMENSIONS ARE IN INCHES

BASIC FRAME	A	D	E	G	H	J	N	O	P*	T	U
180	8-1/2	4-1/2	3-3/4	7/16	13/32	1-3/8	2-7/8	8-15/16	8-7/8	–	1-1/8
210	9-5/8	5-1/4	4-1/4	1/2	13/32	1-1/2	3-3/4	10-7/16	10-9/16	3/8	1-3/8
A250	11-1/8	6-1/4	5	1/2	17/32	1-3/4	4-5/8	10-15/16	9-11/32	7/8	1-5/8
250	11-3/8	6-1/4	5	17/32	17/32	1-15/16	4-7/16	12-7/16	12-13/16	1/32	1-5/8
280●	12-3/8	7	5-1/2	1/2	17/32	2-1/16	5-1/16	13-13/32	12-13/16	1-5/8	1-7/8

BASIC FRAME	V MIN.	W	AA	AB	AC	AF	BA	ES MIN.	FU	SQ. KEY
180	2-1/2	1/8	3/4	6-5/16	5-3/8	2	2-3/4	1-3/4	7/8	1/4
210	3-1/8	3/8	1	7-9/16	6-1/2	1-7/8	3-1/2	2-3/4	1-1/8	5/16
A250	3-3/4	5/8	1-3/4	7-31/32	6-25/32	2-11/32	4-1/4	2-7/8	1-1/8	3/8
250	3-3/4	7/16	1-1/4	8-15/16	7-3/4	1-15/16	4-1/4	2-7/8	1-3/8	3/8
280●	4-15/32	7/16	1-1/2	9-1/8	7-9/16	2-15/16	4-3/4	3-5/16	1-3/8	1/2

FRAME	B	C	F	L	M	AD
182T	6-5/16	13-5/8	2-1/4	5-7/8	4-7/8	1/2
184T	6-5/16	13-5/8	2-3/4	5-3/8	5-3/8	–
213T	6-7/16	15-1/2	2-3/4	5-7/8	5-7/8	–
215T	7-15/16	17	3-1/2	6-5/8	6-5/8	–

FRAME	B	C	F	L	M	AD
A254T	9-1/2	20-1/8	4-1/8	7-3/4	7-3/4	2-1/8
254T	9-1/2	20-5/16	4-1/8	7-15/16	7-15/16	7/16▲
256T	11-1/4	22-1/16	5	8-13/16	8-13/16	7/16▲
284T	10-27/32	23-3/16	4-3/4	9-1/16	9-1/16	1/4
286T	12-11/32	24-11/16	5-1/2	9-13/16	9-13/16	–1/4▼

Dimension "D" will never be exceeded, but may be less than values shown. When exact dimensions are required, shims up to 1/16" may be necessary.

Conduit box can be located on either side and opening may be located in steps of 90 degrees regardless of location. Standard as shown with conduit down.

*Largest motor width.

All rough casting dimensions may vary by 1/4" due to casting variations.

Shaft Extension Diameter Tolerance: +.0000"; –.0005" up to 1-1/2" inclusive." Larger: +.000"; –.001.

▲ "AD" is a negative value on 250 frame motors in F–2, C–1, W–1, W–4, W–5, and W–7 assembly positions.

▼ Minus Dimension indicates outlet box is on opposite side of center line.

● Ratings apply only to 4P. 25H.P. (284T) and 4P. 30H.P. (286T).

OPERATING CHARACTERISTICS
OPEN DRIPPROOF -- NORMAL EFFICIENCY ★

H.P.	SPEED R.P.M. SYN.	SPEED R.P.M. FULL LOAD	% EFFICIENCY ↑▲ FULL LOAD	% EFFICIENCY ↑▲ 3/4 LOAD	% EFFICIENCY ↑▲ 1/2 LOAD	% POWER FACTOR ↑ FULL LOAD	% POWER FACTOR ↑ 3/4 LOAD	% POWER FACTOR ↑ 1/2 LOAD	CURRENT IN AMPERES 230 VOLTS■ FULL LOAD	TORQUE AT FULL VOLTAGE: FULL LOAD TORQUE AT FULL LOAD SPEED (LB. FT.)	TORQUE AT FULL VOLTAGE: LOCKED (STARTING) PERCENT OF FULL LOAD	TORQUE AT FULL VOLTAGE: PULL OUT (BREAKDOWN) PERCENT OF FULL LOAD	CODE
3/4	1200	1150	73.0	72.0	67.0	64.0	54.0	42.5	3.0	3.4	175	275	J
	900	860	68.0	65.5	58.5	54.5	46.0	36.0	3.8	4.6	135	220	J
1	1800	1755	79.0	76.5	71.5	68.5	59.0	46.5	3.5	3.0	275	300	N
	1200	1145	73.0	72.0	67.5	66.5	56.5	43.5	3.9	4.6	170	265	K
	900	855	68.0	65.0	58.0	53.5	44.5	34.5	5.2	6.1	135	215	K
1-1/2	3600	3435	78.0	77.5	73.5	85.5	78.5	66.0	4.2	2.3	175	250	K
	1800	1745	78.5	77.5	72.5	72.0	61.5	48.0	5.0	4.5	250	280	L
	1200	1155	77.0	77.0	72.5	66.5	57.0	44.5	5.5	6.8	165	250	L
	900	860	72.0	69.0	63.0	51.5	43.0	33.0	7.6	9.3	130	210	K
2	3600	3485	78.5	79.5	77.0	88.5	83.0	72.0	5.4	3.0	170	240	L
	1800	1740	78.5	77.0	72.5	72.0	62.0	48.0	6.6	6.0	235	270	L
	1200	1150	76.0	77.0	73.5	69.0	60.0	47.0	7.2	9.1	160	240	L
	900	860	77.5	77.0	73.0	67.0	58.0	45.5	7.2	12.2	130	210	L
3	3600	3490	81.5	82.0	80.0	89.0	83.5	73.0	7.8	4.5	160	230	K
	1800	1740	80.0	80.0	76.5	79.5	71.5	58.0	8.8	9.0	215	250	K
	1200	1160	80.0	80.0	77.5	67.5	59.5	47.5	10.5	13.6	155	230	K
	900	855	80.0	79.0	74.5	61.0	52.0	40.0	11.5	18.5	130	205	K
5	3600	3495	82.5	83.5	82.0	85.5	80.0	68.5	13.3	7.5	150	215	J
	1800	1715	81.5	83.0	82.0	84.5	78.0	66.0	13.6	15.5	185	225	J
	1200	1145	81.0	82.5	81.0	69.0	61.0	49.0	16.8	23.0	150	215	J
	900	870	84.5	85.5	84.5	75.5	70.5	60.5	15.0	30.0	130	205	J
7-1/2	3600	3495	86.0	87.0	86.0	88.0	84.0	75.5	19.0	11.3	140	200	H
	1800	1735	84.0	85.0	83.5	82.5	76.5	65.0	20.5	22.5	175	215	H
	1200	1165	86.5	87.0	85.0	81.0	75.5	65.0	20.0	34.0	150	205	H
	900	870	83.5	84.0	82.0	71.5	63.5	51.0	23.5	45.5	125	200	H
10	3600	3500	86.5	87.5	86.5	87.5	84.5	77.5	25.0	15.0	135	200	H
	1800	1730	84.5	86.0	83.0	84.0	79.5	65.5	26.5	30.5	165	200	H
	1200	1165	86.5	87.5	86.5	82.5	77.5	67.5	26.5	45.0	150	200	H
	900	875	86.0	86.5	85.0	71.0	64.0	52.5	31.0	60.0	125	200	H
15	3600	3495	87.0	88.5	89.0	88.5	87.0	82.0	36.5	22.5	130	200	G
	1800	1750	87.5	88.5	88.0	80.0	75.0	64.5	40.0	45.0	160	200	G
	1200	1170	83.0	84.0	81.5	76.5	68.0	53.5	44.5	67.0	140	200	G
	900	875	84.0	83.5	81.0	64.0	55.0	42.5	52.5	90.0	125	200	H
20	~~3600~~	~~3520~~	~~85.5~~	~~87.0~~	~~86.5~~	~~87.5~~	~~84.0~~	~~76.0~~	~~50.0~~	~~29.8~~	~~130~~	~~200~~	~~G~~
	1800	1755	85.5	86.5	86.0	82.0	75.5	63.0	53.5	60.0	150	200	G
	~~1200~~	~~1170~~	~~85.0~~	~~86.0~~	~~85.0~~	~~78.5~~	~~71.0~~	~~57.5~~	~~56.5~~	~~90.0~~	~~135~~	~~200~~	~~G~~
	900	875	85.5	86.0	85.0	78.0	70.0	57.0	56.5	120.0	125	200	G
25	3600	3515	87.0	88.5	88.5	89.5	87.5	82.0	60.5	37.5	130	200	G
	1800	1755	88.0	89.5	89.0	83.0	78.5	68.5	64.0	75.0	160	200	G
	1200	1170	87.0	88.5	88.5	85.0	82.0	73.5	63.5	112.0	135	200	G
	900	875	86.5	87.5	86.5	73.0	66.0	54.0	74.0	150.0	125	200	G
30	3600	3525	89.0	90.0	89.5	87.5	85.0	78.0	72.5	44.5	130	200	G
	1800	1750	88.5	90.0	89.5	82.0	77.5	67.0	77.5	90.0	150	200	G
	1200	1170	87.0	89.0	89.5	86.0	84.0	77.5	75.0	134.5	135	200	G
	900	875	89.5	90.0	89.5	79.0	74.0	64.5	79.5	180.0	125	200	G
40	3600	3525	90.5	91.5	91.0	89.0	87.5	82.0	93.0	59.5	125	200	G
	1800	1770	90.0	91.0	91.0	86.0	84.0	77.0	96.5	118.5	140	200	G
	1200	1175	88.0	89.0	87.5	84.0	78.5	67.0	101.5	179.0	135	200	H
	900	875	90.0	90.5	90.0	78.0	73.0	63.0	107.0	240.0	125	200	G
50	3600	3535	88.5	90.0	89.5	86.0	83.0	75.5	123.0	74.5	120	200	G
	1800	1770	90.5	91.5	92.0	87.5	86.0	80.5	118.5	148.5	140	200	G
	1200	1170	88.5	90.0	89.5	86.5	83.5	75.0	122.5	224.5	135	200	G
	900	870	89.0	90.5	90.0	80.0	76.0	66.5	131.5	302.0	125	200	G

See Page 3 for larger horsepowers, footnotes, and general information.

GENERAL INSTALLATION, OPERATION & MAINTENANCE INSTRUCTIONS

SAFETY FIRST

High voltage and rotating parts can cause serious or fatal injury. Safe installation, operation and maintenance must be performed by qualified personnel. Familiarization with and adherence to NEMA MG2, the National Electrical Code, and local codes is recommended. It is important to observe safety precautions to protect personnel from possible injury. Personnel should be instructed to:

1. Avoid contact with energized circuits or rotating parts.
2. Disconnect and lock out all power sources before initiating any maintenance or repair.
3. Act with care in accordance with prescribed procedures in handling and lifting this equipment.
4. Be sure unit is electrically grounded in accordance with code requirements.
5. Be sure equipment is properly enclosed to prevent access by children or other unauthorized personnel in order to prevent possible accidents.
6. Be sure shaft key is fully captive before unit is energized.
7. Avoid contact with capacitors until safe discharge procedures have been completed.
8. Most units are shipped without oil. Always be sure oil lubricated units are filled with correct oil to proper level before operating.
9. Provide proper safeguards for personnel against rotating parts and applications involving high inertia loads which can cause overspeed.
10. Avoid extended exposure to equipment with high noise levels.
11. Be familiar with the equipment and read all instructions thoroughly before installing on equipment.

INSPECTION AND HANDLING

Inspect unit to make sure no damage has occurred during shipment. Check Nameplate for correct speed, horsepower, voltage, Hertz and phase for conformance with power supply and equipment. **WARNING:** Units should be lifted using all eyebolts or lugs if provided. These eyebolts or lugs are provided for lifting this unit only and must not be used to lift any additional weight. Lifting angle must not exceed 15 degrees with shank of eyebolt. If not provided, eyebolts to be used must be per ASTM A489 or equivalent. All eyebolts must be securely tightened. Be careful not to touch overhead power lines with lifting equipment. Failure to observe this warning may result in serious personal injury or property damage.

STORAGE

Units should be stored indoors, in a clean, dry location. Winding should be protected from excessive moisture absorption. **NOTE:** If motors are to be stored for over one year, refer to U.S. Electrical Motors. If gear and belt transmission units are to be stored for over six months, refer to U.S. Electrical Motors.

LOCATION

Units should be located in a clean, well-ventilated area for maximum life. **WARNING:** Units should be located in a suitable enclosure to prevent access by children or other unauthorized personnel to prevent possible accidents.

MOUNTING

Mount units on a firm, flat surface sufficiently rigid to prevent vibration.

Drive belts and chains should be within recommended limits of tightness. Couplings should be properly aligned and balanced. For drive recommendations, refer to drive or equipment manufacturers or U.S. Electrical Motors. For application of drive equipment, refer to NEMA MG1.

Motors have been dynamically balanced using a half key the same length as the full key shipped with the motor. If pulley length is less than this key length, rework long key by removing one-half of excess length between pulley and end of key to maintain balance.

Do not restrict motor ventilation. Unless otherwise specified on Nameplate, motor is designed for operation in 40°C (104°F) maximum ambient temperature. **NOTE:** Motors operating under rated load and ambient conditions may feel hot when touched; this is normal and should not be cause for concern. When in doubt, measure frame temperature and confer with nearest office. Standard grease lubricated units can be operated in minimum ambient of -30°F. Special lubricants are required for temperature outside this range.

If unit has been stored in a damp location, dry out thoroughly before operating.

WARNING: Guards should be provided for all exposed rotating parts to prevent possible personal injury. Keep fingers and foreign objects away from ventilation and other openings. Applications involving HIGH INERTIAL LOADS may damage this equipment due to motor overspeed during shut down. Such application should be referred to U.S. Electrical Motors.

CAUTION: Do not force drive coupling or other equipment onto shaft, as bearing damage may result.

POWER SUPPLY AND CONNECTIONS

The power supply must agree with values on Nameplate. Terminal voltage should not vary more than ±10% of Nameplate voltage at rated frequency. Unbalanced line voltage, even a small amount, will cause overheating. Do not exceed the continuous rated operating current on the Nameplate. Starting controls and overload protection should be properly sized in accordance with the National Electrical Code and the control manufacturer's recommendations.

Motor connections should be made by following instructions on connection diagram. Determine direction of rotation before connecting driven equipment. Note direction of rotation label if supplied. Rotation may be reversed on three phase motors by interchanging any two line connections. On two phase motors, interchange A-1 and A-2; and on single phase motors interchange leads per connection diagram on motor. Wiring of units, controls and grounding shall be in accordance with local and National Electrical Code requirements. **WARNING:** Failure to properly ground unit may cause serious injury to personnel. Where unexpected starting could be hazardous to personnel, do not use automatic reset starting devices.

OIL LUBRICATION

Most oil lubricated units are shipped without oil. Add oil of the correct viscosity for the ambient temperature, per Nameplate on unit, to proper level.

Make certain an oil with mild EP additives is used on wormgear units.

Refer to Nameplate or Lubrication Instruction Plate for oil viscosity and oil change interval. **WARNING:** For applications in the food and drug industry (including animal food), consult the petroleum supplier for lubricants that are acceptable to the Food and Drug Administration and other governing bodies.

MAINTENANCE

Inspect units at regular intervals. Keep units clean and ventilation openings clear of dust, dirt or other debris. Lubricate units per this operating instruction folder and instruction plate on unit. Excessive lubrication may damage the unit. Do not over grease! **WARNING:** Disconnect all power sources to the unit and discharge all parts which may retain an electrical charge before attempting any maintenance or repair. Screens and covers must be maintained in place when unit is in operation. Motor for use in hazardous locations — class I & II Installation: Repairs of these motors must be made by the manufacturer or authorized service station approved by the manufacturer and U.L. to maintain the U.L. Listing. The U.L. Listing applies to the electrical motor only and not to the belt or gear transmissions or other devices that may be connected to the motor.

VARIDRIVE® UNITS

Do not turn control wheel while unit is not operating as this may cause damage to the unit. Handwheel position is a relative speed indication only. Use direct speed sensing accessory for precise speed indication. Units equipped with electric remote speed indicator accessory are not calibrated at the factory and must be calibrated at site. Refer to calibration instructions with meter.

VARIDRIVES equipped with ENDOLUBE® construction do not require lubrication of the sliding Varidiscs and do not require weekly operation through speed range.

VARIDRIVES equipped with splined shafts require monthly lubrication for 8 hour/day service, and semi-monthly for 24 hour/day service. (For complete instructions for entire drive, refer to the lubrication instruction plate on unit.) Operate VARIDRIVE through its entire speed range weekly. **WARNING:** Do not force control wheel beyond speed limits shown on Nameplate. The mechanism and belt are designed for the rated speed and horsepower shown on the Nameplate. Operation beyond these limits may result in damage to the belt and mechanism and possible injury to personnel. The covers on the frame case must not be removed or left off while unit is in operation. Do not attempt to disassemble or repair the driven pulley discs as high spring force may be released, causing injury to personnel. Refer to authorized Service Center. Refer to VARIDRIVE Installation and Maintenance Manual for compalete belt changing instructions.

For additional detailed information, request specific product installation and maintenance manual from U.S. Electrical Motors, Milford, Conn. 06460.

RENEWAL PARTS AND WARRANTY SERVICE

When inquiring for renewal parts, call the U.S. Electrical Motors Service Department (Milford, Conn.) or Parts Stocking Distributors. For warranty service call the nearest U. S. Electrical Motors Service Station. Give them complete Nameplate data including serial number, etc.

LUBRICATION INSTRUCTIONS

Some small motors have sealed-for-life bearings which require no relubrication. Regreasable bearings are shipped with a high quality, wide temperature-range grease in the bearings.

Motors can be regreased by stopping the motor, removing drain plug and pumping new grease into fillhole. Run motor with drain plug removed to discharge excess grease. Replace drain plug.

Units that operate at speeds greater than 1800 RPM should be lubricated on a more frequent maintenance schedule depending on duty cycle. Use a low pressure grease gun and avoid overgreasing.

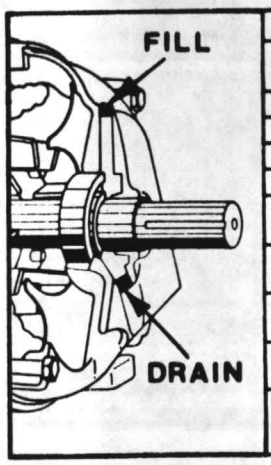

SUGGESTED REGREASING INTERVALS			
SERVICE	MOTOR HORSEPOWER		
	UNDER 50	50-100	100 Up
A	1-2 Yrs.	1-2 Yrs.	1 Yr.
B	1 Yr.	1 Yr.	6 Mos.
C	1 Yr.	6 Mos.	3 Mos.
D	4 Mos.	3 Mos.	3 Mos.

SERVICE SYMBOL	TYPES OF SERVICE
A	Infrequent operation or light duty in clean atmosphere.
B	8-16 Hrs/Day in clean, relatively dry atmosphere.
C	12-24 Hrs/Day, heavy duty, or if moisture is present.
D	Heavy duty in dirty, dusty locations; high ambients; moisture laden atmosphere; vibration.

OFFICES

WORLD HEADQUARTERS CONNECTICUT	125 Old Gate Lane, MILFORD, CT 06460 (203) 878-9311
CALIFORNIA	1740 West Katella Ave., Suite G., Orange, CA 92667 (714) 632-9752
ILLINOIS	1505 Birchwood Ave., Des Plaines, IL 60018 (312) 296-9300
TENNESSEE	3276 Democrat Road, Memphis, TN 38118 (901) 365-2360
TEXAS	1400 South Sherman, Suite 216, Richardson, TX 75081 (214) 644-0470

U.S. ELECTRICAL MOTORS
DIVISION OF EMERSON ELECTRIC CO.
125 OLD GATE LANE
MILFORD, CONNECTICUT 06460

Prices, construction and ratings subject to change without notice.

Printed in U. S. A.

DURAGAUGE® Pressure Gauge 1279/1379

1279

The solid front Ashcroft phenol case gauge is truly an industry first. Offered in the weather-proof version, it is obtainable lower connected or back connected. As a convertible gauge, lower connection only, it is easily field converted to a hermetically sealed or liquid filled gauge with a special kit. The kit is described on page 17. Molded threads at the front and rear of the case provide axial seals with the use of threaded rings. The ring is glass filled polypropylene. In the weather-proof version, the pressure relief back is polypropylene, fastened with stainless steel screws. For additional information on this remarkable three-way solid front gauge, please request Bulletin DU-2.

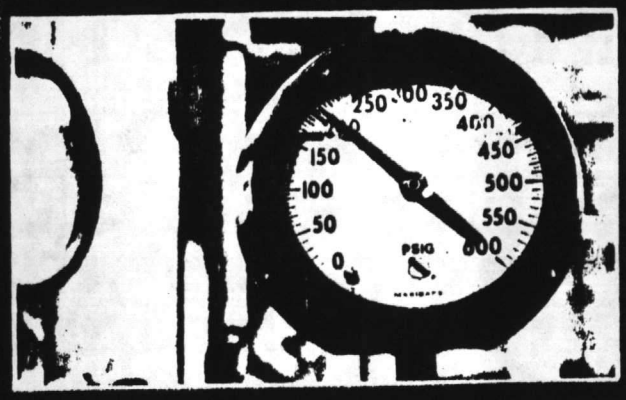

1379

This classic rugged solid front design pressure gauge is tops in its field. The 1379 is a versatile gauge that can be mounted in a variety of ways to fit any application. The black epoxy finished aluminum case stands up extremely well in most environmental conditions. It's easy to maintain and difficult to damage.

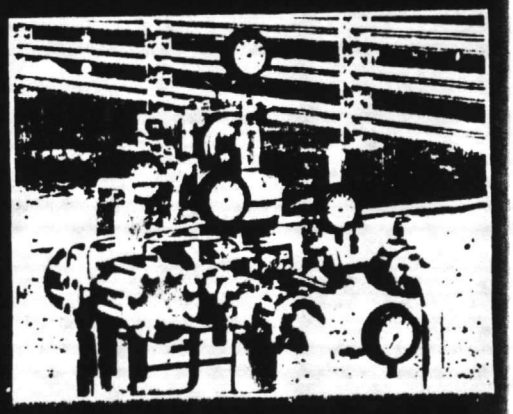

DURAGAUGE®
Pressure Gauge

The Ashcroft® Stainless Steel Rotary Geared Teflon® S Movement is another "first" in gauge manufacture. It was released in 1971 after more than two years of development and one year of exhaustive field testing.

It is truly innovative with its thinner plates and segment, elimination of bushings, and low friction Teflon S coating on wearing parts.

The Teflon S coating is applied to the pinion gear, pinion shaft, and segment shaft. These critical components translate the motion of the Bourdon tube tip into the rotating pointer motion. Minimal friction is essential for reduced wear. The coating also serves to protect wear surfaces from outside ambient conditions.

A specially formulated lubricant is applied to all wear points. Wear is further reduced because the moving parts are light weight.

The curved tail segment provides easy calibration by minimizing the effect of the span adjustment on the linearity adjustment. (Span adjustment is the positioning of the link in the curved tail slot and linearity adjustment is the rotation of the movement with the pinion shaft as the center of rotation.)

This movement, like all other Ashcroft "firsts", has met with outstanding acceptance in the marketplace. Over four million gauges have been shipped with the Stainless Steel Rotary Geared Teflon S Movement since its release.

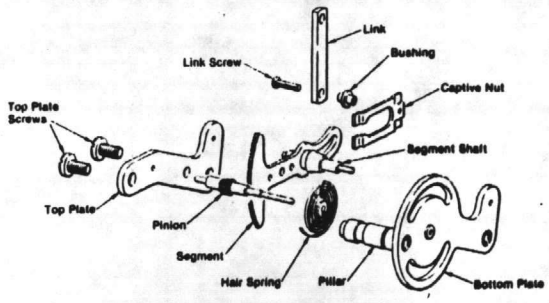

Ashcroft® Stainless Steel Rotary Geared Teflon® S Movement

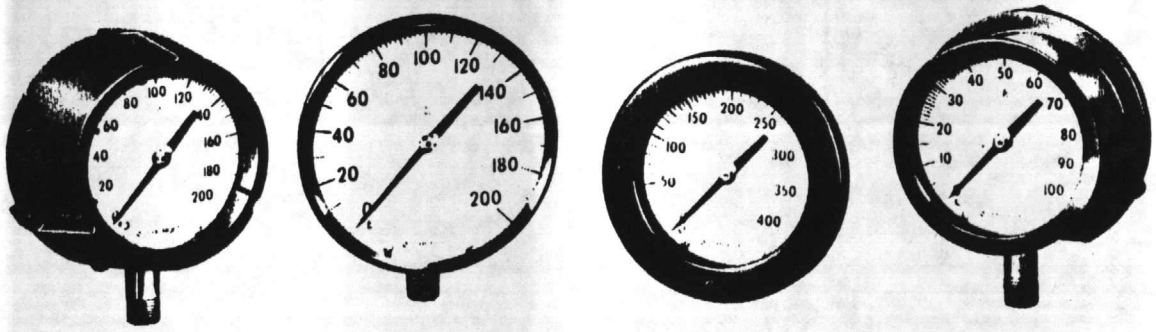

1279 2462 1377 1379

Case Types

Several important variables must be considered when selecting the type of case for the application. A gauge is subject to environmental and atmospheric conditions, and the gauge internals must be protected from these elements.

All Duragauge gauges have solid front cases which provide maximum safety for all gauge locations, type of processes, or mediums being monitored. Viewing ease and readability from a distance will determine the dial size of the gauge.

Type of mounting — stem, surface, or flush — is important, as is the pressure connection location, lower or back.

General characteristics of case style are described briefly here. A comprehensive reference table of case styles, materials, and physical characteristics of Duragauge gauges is on page 8; case dimensional drawings are on pages 18 and 19.

Case Type Number 1279 Black phenol turret design. Integrally molded threads front and back of gauge. Ring threaded, glass filled polypropylene, back cover polypropylene with stainless steel screw. Available with lower or back connection. Only the lower connection is field convertible to hermetically sealed or liquid filled versions. Stem or surface mounted; can be flush panel mounted with an accessory ring.

Case Type Number 1377 Aluminum case. Steel ring hinged at top, retained by a clamp screw at the bottom. Case and ring are black epoxy coated. Flush mounted, back connection only.

Case Type Number 1379 Aluminum case, threaded aluminum ring (bronze in 8½"). Case and ring are black epoxy coated. Stem or surface mounted. Wide flange flush mounting ring supplied on back connected gauges.

Case Type Number 2462 Polypropylene, fiberglass reinforced, black. Bayonet lock polypropylene ring. Features 6" dial readability using 4½" internals. Available for stem, surface, or flush mounting.

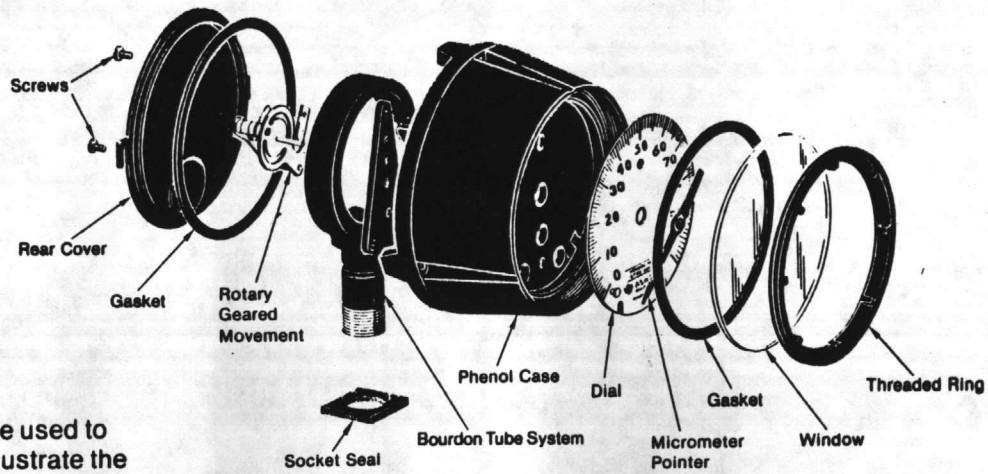

1279 case used to clearly illustrate the gauge components

WARNING: All gauge components should be selected considering media and ambient operating conditions to prevent misapplication. Improper application can be detrimental to the gauge, cause failure and possibly personal injury or property damage.

The information contained in this bulletin is offered as a guide to assist in making the proper selection of a pressure gauge.

Additional information is available from the Dresser Industrial Instrument Operations.

Pressure Ranges — Select a gauge with a full scale pressure range of approximately twice the normal operating pressure. The maximum operating pressure should not exceed approximately 75% of the full scale range. Failure to select a gauge range within these criteria may ultimately result in fatigue failure of the Bourdon tube component.

Operating Conditions — The operating conditions to which a gauge will be subjected must be considered. If the gauge will be subjected to severe vibrations or pressure pulsations, liquid filling the gauge may be necessary to obtain normal product life. Other than discoloration of the dial and hardening of the gasketing that will occur as ambient temperatures exceed 150°F, metal case Duragauges (that are not liquid filled) can withstand continuous ambient temperatures as high as 350°F. Phenol and polypropylene case gauges can withstand ambient temperatures up to 250°F. Accuracy will be affected by approximately 1.5% per 100°F. Gauges with welded joints will withstand 750°F (450°F with silver brazed joints) for short times without rupture, although other parts of the gauge will be destroyed and calibration will be lost.

Movement — All gauges feature a stainless steel, rotary geared movement capable of withstanding severe vibration and pulsation. Developed and used in Ashcroft gauges since 1924, it is the most efficient and positive method of transmitting mechanical motion. Moving parts are designed and protected to reduce friction and extend wear life. A unique curved tail segment and captive link nut facilitate calibration. Each movement is ultrasonically cleaned and lubricated to resist wear associated with high frequency vibration and/or pulsation.

Bourdon Tube — Available for a wide variety of media applications, materials include: phosphor bronze, alloy steel, AISI 316 stainless steel, and K-monel. Proper selection of the Bourdon system material is dependent on the process fluid to which the system will be subjected. If the correct Bourdon system material is not available, the use of a diaphragm seal may be necessary to protect the Bourdon system from the process fluid.

Case — Four case styles and three different materials are offered — aluminum alloy, fiberglass reinforced polypropylene, and phenol. All cases are a solid front design which provides maximum safety with a solid wall between the Bourdon tube and the window. The entire rear of the gauge is covered with a gasketed pressure relief back. Should the Bourdon tube fail due to overpressure, corrosion, or fatigue, the wall directs the buildup of case pressure through the rear — away from the dial and window.

Dial — Aluminum dials have highly legible black markings on a white background. They are printed using a special ultraviolet light-cured ink which is extremely durable, will not corrode, and allows cleaning the dial without damage. Dial scales are uniformly graduated. Receiver gauge and false reading dials are marked to indicate the actual input pressure to which the gauge is subjected.

Micrometer Pointer — The indicating pointer permits easy reading as well as easy adjustment. Readily accessible from the front of the gauge, the self-locking micrometer adjustment permits repositioning the pointer without removing it from the shaft. Since it is balanced and made of aluminum, it imposes negligible wear force on the movement.

Window — The standard window for the Duragauge Pressure Gauge is glass. Non-glare glass is optional. Acrylic windows, also optional, are more resistant to impact breakage than glass windows. Laminated safety glass, offered as an optional safety precaution, will not fracture into many pieces as will ordinary or heat treated glass.

Ring — The ring, which encloses the window, is threaded, bayonet (cam), or hinged design, depending upon case type. All windows and backs have gaskets to protect the internal mechanisms from weather, dust, and fumes.

DURAGAUGE®
Pressure Gauge

Maximum pressure at which a gauge is continually operated should not exceed 75% of full scale range.

To Order A Gauge:

Select:

1. Case type number — Table A
2. Dial size — Table A
3. Bourdon System (*) (ordering code) — Table B
4. Connection: Location — Table A: Size — Table B
5. Mounting accessory or variation (if required) — Table A
6. Pressure Range — page 9
7. Accessories and optional features — pages 12-17

Example:

1279(*)S	4½"	TA	Back ½ NPT	w/1278M Ring	0/2000 psi
phenol-solid front	4½"	AISI 316 st. st. system	Back Conn. ½" NPT	with 1278 Ring	0/2000 psi

TABLE A — CASE SELECTION

Case Type Number	Dial Size — in.	Case Style	Case: Material Finish	Ring: Style Material Finish	Mounting and Connection
1279(*)S**	4½	Solid Front	Phenol Black	Threaded Reinforced Polypropylene Black	Stem — Lower or Back Surface — Lower or Back Flush — Back: order 1278M ring. (see page 16)
1377(*)S	4½, 6, 8½	Solid Front	Aluminum Black epoxy coated	Hinged Steel Black wrinkle enamel coated	Flush — Back connection only
1379(*)S	4½, 6, 8½	Solid Front	Aluminum Black epoxy coated	Threaded Aluminum: 4½, 6 Bronze: 8½ Black epoxy coated	Stem — Lower or Back Surface — Lower or Back Flush — Back
2462(*)	6	Solid Front	Polypropylene (fiberglass reinforced) Black	Bayonet Lock Polypropylene Black	Stem — Lower or Back Surface — Lower or Back: Specify XBF Flush — Back: Specify XBQ

For all Liquid Fill Gauges see Bulletin LF-1

(*)Bourdon tube designation.
**Available Liquid Filled or Hermetically Sealed — see page 17.

TABLE B — BOURDON SYSTEM SELECTION (1)

Ordering Code	Bourdon Tube and Tip Material (all joints TIG welded except "A")	Socket Material	Tube Type: Drawn or Bored	Pressure Range (PSI)	NPT Connection (2)
A	Grade A Phosphor Bronze Tube— Brass Tip, Silver brazed	Brass	Drawn	12/1000	½
B	AISI 4130 alloy steel	AISI 1019 steel	Drawn	12/1000	½
D	AISI 4130 alloy steel	AISI 1019 steel	Bored	1000/20,000	½
		AISI 316 stainless steel	Drawn (spiral)	100,000 (3)	¼ high pressure (lower conn. only)
R	AISI 316 stainless steel	AISI 1019 steel	Drawn	12/1000	½
RT	AISI 316 st. st. tube AISI 1019 steel tip	AISI 1019 steel	Bored	1000/20,000	½
S	AISI 316 stainless steel	AISI 316 stainless steel	Drawn	12/1000	½
TA	AISI 316 stainless steel	AISI 316 stainless steel	Bored	1000/20,000	½
			Drawn (spiral)	30,000/80,000 (3)	¼ high pressure
P	K Monel	R Monel (4)	Drawn	12/1000	½
Q	K Monel	R Monel (4)	Bored	1000/20,000	½

(1) For selection of the correct Bourdon system material, see the media application table on Page 10.
(2) Optional connections available: ¼ NPT where ½ NPT is standard
(3) 30,000-80,000 psi available in 6" lower & back and 8½" back connection only. Type 1377-1379 solid front cases. 100,000 psi available in 6" lower connection only Type 1379 solid front case.
(4) For applications where NACE standard MR-01-75 is specified the socket material will be Monel 400.

TABLE C

Standard PSI Ranges

pressure (psi)

total graduation	figure interval	minor graduation
0/15	1	0.1
0/30	5	0.2
0/60	5	0.5
0/100	10	1
0/160	20	1
0/200	20	2
0/300	50	2
0/400	50	5
0/600	50	5
0/800	100	10
0/1000	100	10
0/1500	200	10
0/2000	200	20
0/3000	500	20
0/5000	500	50
0/10,000	1000	100
0/20,000	2000	200
0/30,000	5000	200
0/40,000	5000	500
0/50,000	5000	500
0/80,000	10,000	1000
0/100,000	10,000	1000

compound

range	figure interval		minor graduation	
	inches mercury	psi	inches mercury	psi
30" Hg/0/ 15 psi	5	3	0.5	0.2
30" Hg/0/ 30 psi	10	5	1	0.5
30" Hg/0/ 60 psi	10	10	1	1
30" Hg/0/100 psi	10	10	2	1
30" Hg/0/150 psi	10	20	5	2
30" Hg/0/300 psi	30	25	5	2

combination

range		figure interval		minor graduation	
inner scale psi	outer scale feet water	psi	feet water	psi	feet water
0/15	0/34	3	5	0.5	0.5
0/30	0/70	5	10	0.5	1
0/60	0/140	5	20	0.5	5
0/100	0/230	10	20	1	2
0/160	0/370	20	50	2	5
0/200	0/460	20	50	5	5
0/300	0/690	25	100	5	10

vacuum

total graduation	figure interval	minor graduation
30/0 inches Mercury	5 inches	0.2 inch
34/0 feet Water	5 feet	0.5 foot

retard

total graduation	figure interval	minor graduation
0/10 psi retard to 30 psi	1 psi 30 psi	0.1 psi 5 psi
0/20 psi retard to 60 psi	2 psi 60 psi	0.2 psi 10 psi
0/40 psi retard to 100 psi	5 psi 100 psi	0.5 psi 10 psi
30" Hg vac/75 psi retard to 150 psi	5" Hg/15 psi 150 psi	1" Hg/1 psi 5 psi
10" Hg vac/5 psi retard to 30" Hg Vac retard to 30 psi	2" Hg/1 psi 30" Hg 30 psi	0.2" Hg/0.1 psi 5" Hg 5 psi

DIAL ARC = 270°, except ranges over 20,000 psi are supplied with 210° dial arc.

Standard Metric Ranges

RANGE		DIAL GRADUATIONS		RANGE	DIAL GRADUATIONS		Outer scale when dual range specified psi
kg/cm² (Kilograms per sq. cm.)	bar	figure interval	minor graduation	kPa (kilopascal)	figure interval	minor graduation	
pressure							
0/1	0/1	0.1	0.01	0/100	10	1	0/14
0/1.6	0/1.6	0.2	0.02	0/160	20	2	0/22
0/2.5	0/2.5	0.5	0.02	0/250	50	2	0/35
0/4	0/4	0.5	0.05	0/400	50	5	0/55
0/6	0/6	0.5	0.05	0/600	50	5	0/85
0/10	0/10	1	0.1	0/1000	100	10	0/140
0/16	0/16	2	0.2	0/1600	200	20	0/220
0/25	0/25	5	0.2	0/2500	500	20	0/350
0/40	0/40	5	0.5	0/4000	500	50	0/550
0/60	0/60	5	0.5	0/6000	500	50	0/850
0/100	0/100	10	1	0/10 000	1000	100	0/1400
0/160	0/160	20	2	0/16 000	2000	200	0/2200
0/250	0/250	50	2	0/25 000	5000	200	0/3500
0/400	0/400	50	5	0/40 000	5000	500	0/5500
0/600	0/600	50	5	0/60 000	5000	500	0/8500
0/1000	0/1000	100	10	0/100 000	10 000	1000	0/14,000
0/1600	0/1600	200	20	0/160 000	20 000	2000	0/22,000
0/2500	0/2500	500	20	0/250 000	50 000	2000	0/35,000
0/4000	0/4000	500	50	0/400 000	50 000	5000	0/55,000
0/6000	0/6000	1000	50	0/600 000	100 000	10 000	0/85,000
compound							
-1/0/1.5	-1/0/1.5	0.5	0.02	-100/0/150	50	5	30" Hg/0/20
-1/0/3	-1/0/3	0.5	0.05	-100/0/300	50	5	30" Hg/0/40
-1/0/5	-1/0/5	0.5	0.05	-100/0/500	50	10	30" Hg/0/70
-1/0/9	-1/0/9	1	0.1	-100/0/900	100	10	30" Hg/0/125
				-100/0/1500	200	20	30" Hg/0/215
				-100/0/2400	500	20	30" Hg/0/340
vacuum							
-1/0	-1/0	0.1	0.01	-100/0	10	1	30" Hg

Gauge Accuracy
Duragauge gauges are made in accordance with ANSI B40.1 (Gauges, Pressure and Vacuum, Indicating Dial Type — elastic element), Accuracy Grade 2A (±0.5% of span). Because of hysteresis, the accuracy of gauges over 20,000 psi, through 100,000 psi, is 1 to 2% depending on range and Bourdon tube material. The accuracy of a retard range gauge applies only to the expanded portion of the scale. The error in the compressed portion is −10 to +20 percent of the span.

Crispin

MIDGET AIR VALVES

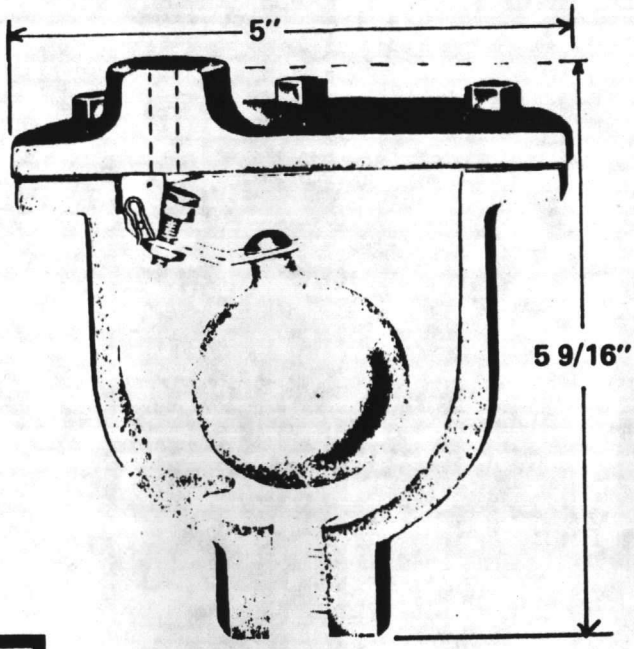

ORIFICE SIZING INFORMATION

ORIFICE DIA.	RANGE OF WORKING PRESSURE
5/32"	0 TO 25 LBS.
1/8"	0 TO 40 LBS.
3/32"	0 TO 75 LBS.
1/16"	0 TO 125 LBS.
3/64"	0 TO 150 LBS.
1/32"	0 TO 225 LBS.
.028 - #70 DRILL	0 TO 300 LBS.

Crispin Midget Air Valves are chosen for use in venting trapped air in hot water systems being installed at the high points of the line, thereby resulting in an increase of the B.T.U. output. The Crispin Midget Air Valve is equally well designed for venting cold water, petroleum products and many other liquids of varying specific gravities. The Midget is also ideal for automatic priming of vacuum primed pumps. A vacuum check is available if desired for attachment to the valve outlet to prevent air from re-entering the system.

PARTS LIST

PART NO.	ITEM	MATERIAL	QTY. PER UNIT
1	VALVE SEAT	STAINLESS STL.	1
2	PLUNGER VALVE	STAINLESS STL.	1
3	PLUNGER NUT	STAINLESS STL.	1
4	VALVE LEVER	STAINLESS STL.	1
5	SCREW (DRIVE)	STAINLESS STL.	1
6	BALL FLOAT	STAINLESS STL.	1
7	HINGE PIN	STAINLESS STL.	1
7A	PIN CLIP	STAINLESS STL.	1
8	HINGE BUTT	STAINLESS STL.	1
9	BOLT	STEEL	6
10	SCREW	STAINLESS STL.	1
11	FLANGE	CAST IRON	1
12	BODY	CAST IRON	1
13	FLANGE GASKET	ACCOPAC	1
*14N	NIPPLE	STEEL	1
*14V	VACUUM CHECK VALVE	BRASS	1

*Part No's. 14N & 14V Are Optional At Customer's Request.
Approximate Weight—6 Lbs.

MODEL INFORMATION

Size of Valve	3/8"	1/2"	3/4"	1"
Model No.	M3	M5	M8	M10
NPT-OUTLET	3/8"	3/8"	3/8"	3/8"

NOTE: MATERIALS AND PRICES SUBJECT TO CHANGE WITHOUT NOTICE.

MULTIPLEX Manufacturing Co.
600 Fowler Ave., P.O. Box 427, BERWICK, PA 18603
717-752-4524

WARNING
AIR COMPRESSOR
INFLATION PROCEDURE

An air compressor can be used to pressurize Solo sprayers equipped with a built-in inflation valve. Compressors pressurize sprayers much more rapidly than hand pumping; for this reason extra caution must be exercised when using compressed air. **Sprayers must be functioning properly, unmodified and have all component parts.** The following procedures must be followed. Failure to do so could result in serious injury to the operator or others.

1) Before **each** use of a compressor with the sprayer be certain that:
   a) The umbrella valve (or valve cone on older models) is present, installed and functioning properly. The valve is located on the bottom of the cylinder (see owner's manual, page 2, "Pump Maintenance" item #7).
   b) The pump assembly is screwed snug to the sprayer tank.
   c) The pressure relief valve is functioning properly. Check by pulling up on the valve until the red stem shows. The valve stem should move freely and spring back to its original position when released. The O-ring and the valve stem must be greased (see page 2, "Maintenance" in the owner's manual).

If any of the above items or other components is malfunctioning, STOP!, do not use an air compressor to pressurize. Repairs must be made prior to use.

2) Additional Precautions:
   a) Fill the sprayer with liquid formula.
   b) Do not stand over the sprayer handle while pressurizing with an air compressor.
   c) Do not stand over the sprayer while releasing the handle from the locked position. Compressed air can cause the pump handle to pop upward if the valve cone or umbrella valve is worn, damaged or if the pressure relief valve is not functioning (see item 1c above).

3) When pressurizing, place pump handle in the unlocked position, resting on top of the pump assembly. Begin pressurizing slowly. If the pump handle rises...**STOP!, DISCONTINUE PRESSURIZING.** Pull up on the pressure release valve and hold until all the pressure is released; then remove the pump, check and replace the umbrella valve (or valve cone). Compressed air can cause the pump handle to pop upward if the valve cone or umbrella valve is worn, damaged or not installed completely. Do not pressurize until the worn or damaged part has been replaced, installed properly and the handle does not rise during pressurization. Should you have questions, please call Solo (800) 296-7656.

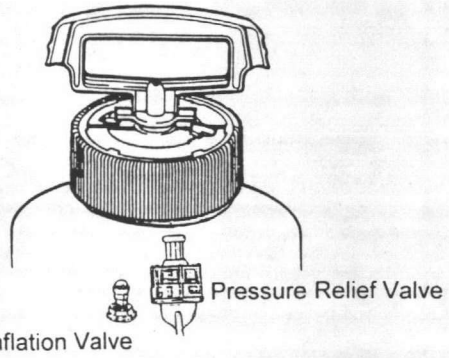

Figure 1 – Handle in the unlocked, resting position.

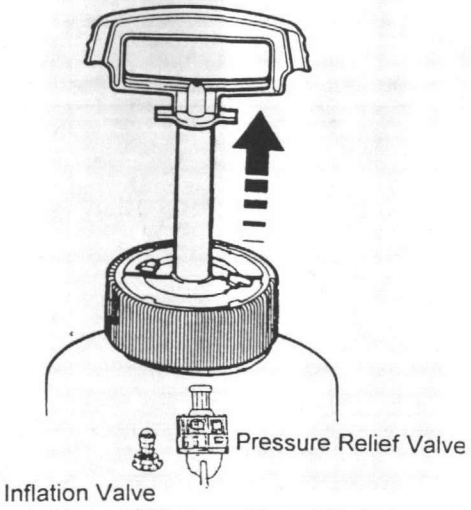

Figure 2 – Handle rising during pressurization; indicating a potentially unsafe condition.