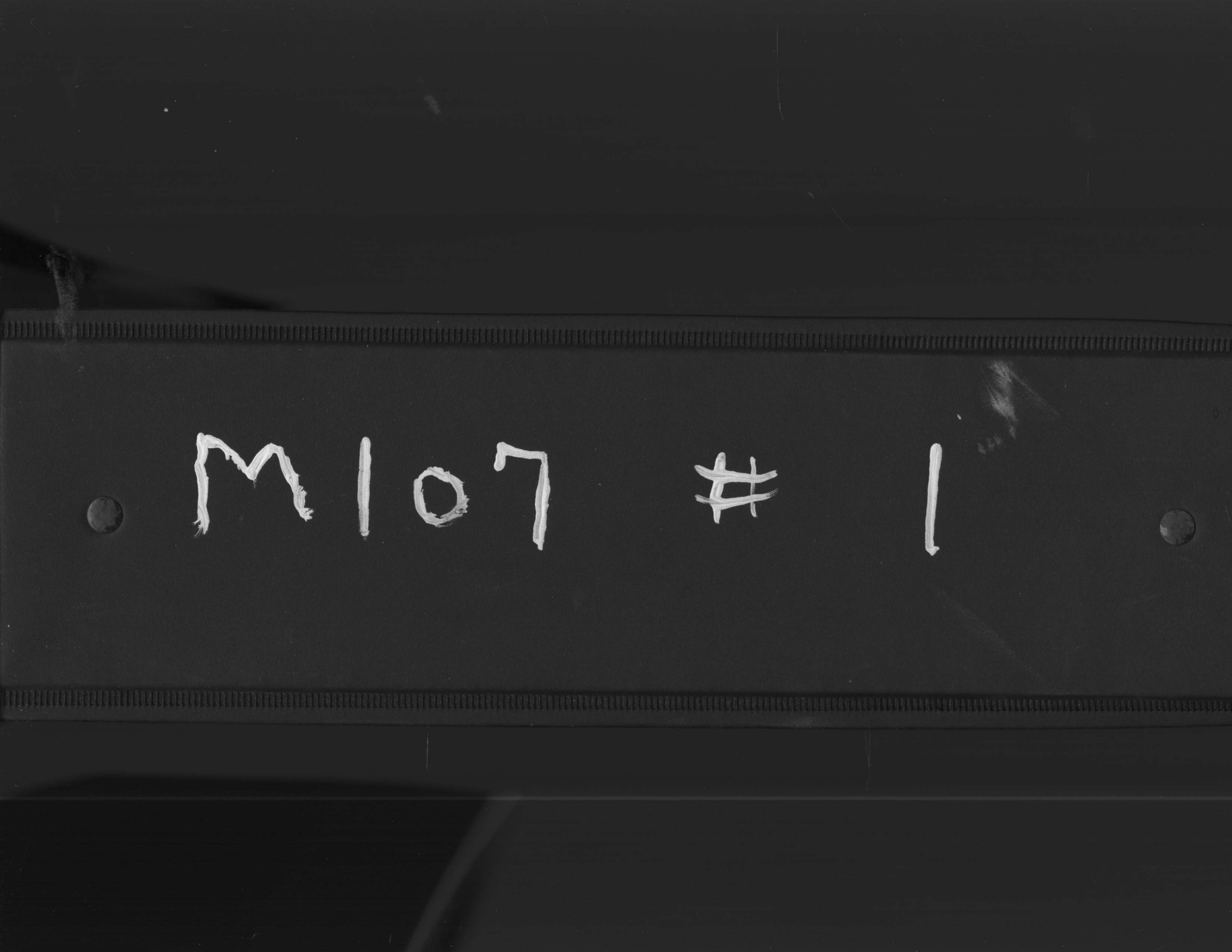
M107 # 1

FROM SNEEDEN, INC. 11-10-7

Mechanical Contractors

P. O. BOX 3548 • WILMINGTON, NORTH CAROLINA 28406-3548

RETURN REQUESTED - THIRD OR FOURTH CLASS

TO

OPERATION AND MAINTENANCE MANUAL
FOR
APPLIED INSTRUCTION BUILDING
MARINE CORPS BASE
CAMP LEJEUNE, NC

TRANE™

SPHA-M-2B
22-5303-1
1st Printing 1985

OPERATION/MAINTENANCE GUIDE

Self-Contained Heat Pumps

Library	Service Literature
Product Section	Unitary
Product	Heat Pump, Self-Contained
Model	SPHA
Literature Type	Operation/Maintenance
Sequence	2B
Date	June 1985
File No.	SV-UN-PKGP-SPHA-M-2B-685
Supersedes	SPHA-M-2A (4/84)

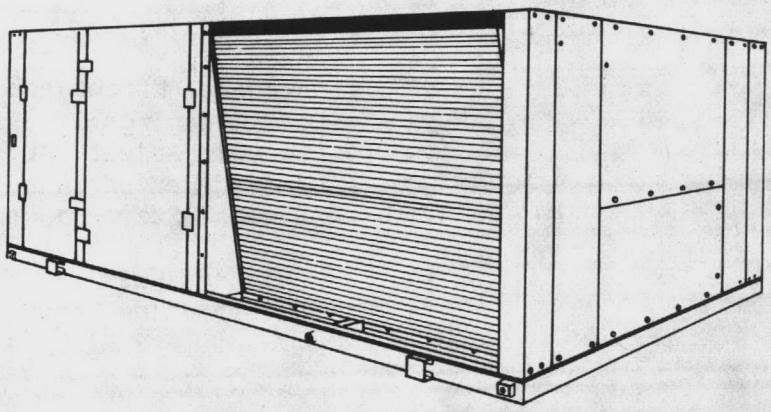

Models: SPHA-200 and SPHA-250

Since The Trane Company has a policy of continuous product improvement, it reserves the right to change specifications and design without notice. The installation and servicing of the equipment referred to in this booklet should be done by qualified, experienced technicians.

Table of Contents

3 **Model Number Description**

4 **General Information**
4 Literature Change History
4 Unit Nameplate
4 Warnings and Cautions
6 Unit Specifications
6 Unit Description

14 **Operation**
14 System Operation
14 --Cooling
14 --Heating
16 --Defrost
16 Thermostat
17 Remote Control Panel
19 Safety Controls
20 --High Pressure Cutout
21 --Low Pressure Cutout
21 --Compressor Motor Protectors
21 --Reset Relays
22 --Filter Switch
22 --Electric Heat High-Limit Switch

23 **Maintenance**
23 Periodic Maintenance
23 --Monthly
23 --Semiannually
24 --Annually
28 Maintenance Procedures
28 --Coil Cleaning
29 --Fan Belt Adjustment
30 --Limited-Period Shutdown and Start-Up Procedures
31 --Seasonal Start-Up Procedure

33 **Trouble Analysis**
35 Troubleshooting Chart

The Trane Company
La Crosse, Wisconsin 54601
Printed In U.S.A.

©American Standard Inc. 1985

Model Number Description

Trane products are identified by a multiple-character model number that precisely identifies a particular type of unit. An explanation of this alphanumeric identification code is shown below. It will enable the owner or service engineer to define the operation, components and appropriate accessories for a specific unit.

Note: This unit may also carry a second identifying number, such as "BWC240L2***A". This subsidiary number is used **only** for initial ordering purposes. For unit parts or service information, always use the model nomenclature described below and used throughout this manual.

Model No.:	S	P	H	A	200	6	D	E	2	0	F	2	1	D	B	0
Digit No.:	1	2	3	4	5,6,7	8	9	10	11	12	13	14	15	16	17	18

Digit 1
Self-Contained

Digit 2
Unit Function
P = Heat Pump, Air-to-Air

Digit 3
Unit Airflow
H = Single-Zone

Digit 4
Development Sequence

Digits 5, 6, 7
Nominal Tonnage (Cooling)
200 = 20 Tons
250 = 25 Tons

Digit 8
Main Power Supply
3 = 230/60/3 (XL)
4 = 460/60/3 (XL)
5 = 575/60/3 (XL)
6 = 200/60/3 (XL)

(XL = Across-the-Line Start)

Digit 9
Electric Heat Capacity
D = 30 KW
F = 40 KW
H = 50 KW
K = 60 KW
M = 80 KW
P = 100 KW
0 = No Electric Heat

Digit 10
Design Sequence

Digit 11
Exhaust Section
0 = None
1 = Barometric Relief
2 = Power (1.5 HP)

Digit 12
Power Exhaust Air Fan Drive Selection
0 = None

Digit 13
Filter Option
F = Hi-Efficiency Throwaway

Digit 14
Supply Air Fan HP
2 = 5 HP (20-Ton Only)
3 = 7.5 HP (25-Ton Only)

Digit 15
Supply Air Fan Drive Selection
1 = Drive #1
2 = Drive #2

Digit 16
Outdoor Air Option
A = No Outdoor Air
B = 0-25% Manual Control
D = Economizer Cycle

Digit 17
System Control
A = ACO/MCO T'stat Only
B = ACO/MCO T'stat and Remote Panel
C = No T'stat or Remote Panel

Digit 18
Agency Approval
0 = None
4 = UL-Approved
5 = CSA-Approved

General Information

Literature Change History

SPHA-M-2 (July 1979)
Original issue of manual. Covers "B" design sequence for all SPHA units.

SPHA-M-2A (April 1984)
Added additional general unit data; expanded "Maintenance" section to provide more complete maintenance information, as well as seasonal and limited-period start-up and shutdown procedures. Provided a troubleshooting chart, and added "C", "D", and "E" design sequences to cover.

SPHA-M-2B (June 1985)
Changed design of front cover; changed format of model number breakdown and added information about possible second unit ordering number in "Unit Model Number Description".

Unit Nameplate

The nameplate of each SPHA unit is located on the exterior left-hand access door of the main control panel; see Figure 1. Also illustrated in Figure 1, the nameplate provides the following information: model and serial numbers, refrigerant charge, minimum circuit amps, maximum fuse size, component electrical data, and minimum clearances from combustible materials.

Warnings and Cautions

"Warnings" and "Cautions" appear in bold typeface at appropriate places in this instruction manual. WARNINGS are provided to alert operating and maintenance personnel to potential hazards that could result in personal injury or death; they do **not** replace manufacturer recommendations. CAUTIONS are designed to alert operating/maintenance personnel to conditions that could result in equipment damage.

Your personal safety and the proper operation of this machine depend upon the strict observance of these precautions. The Trane Company assumes no liability for installations or service procedures performed by unqualified personnel.

Figure 1
SPHA Unit Nameplate

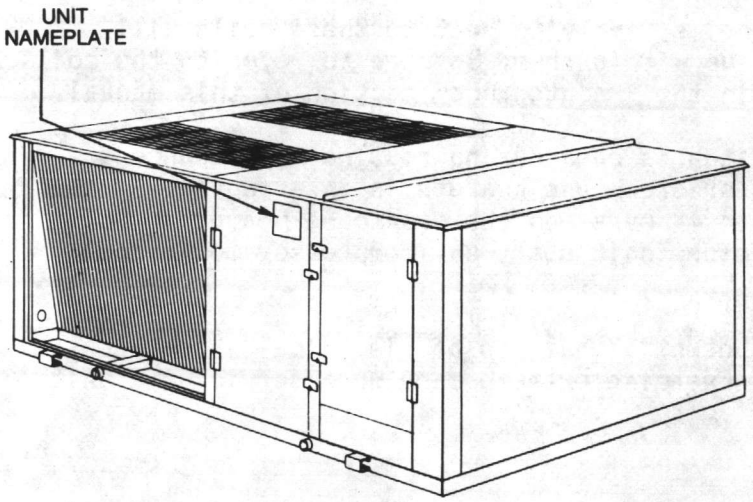

TRANE™ HEAT PUMP FOR OUTDOOR USE

MODEL NO.

SERIAL NO.

ITEM NO.

UNIT POWER SUPPLY

RATED VOLTAGE ____ HZ ____ PHASE ____

UTILIZATION VOLTAGE RANGE ____

THIS UNIT IS SUITABLE FOR OPERATION ON THE FOLLOWING NOMINAL SYSTEM VOLTAGES ____

MINIMUM CIRCUIT AMPACITY ____ AMPS

RECOMMENDED DUAL ELEMENT FUSE ____ AMPS

MAXIMUM FUSE SIZE ____ AMPS

	QTY	VOLTS	HZ	PH	RLA, EA.	LRA, EA.
COMPRESSOR MOTOR COOLING						
COMPRESSOR MOTOR HEATING						

	QTY	VOLTS	HZ	PH	FLA, EA.	HP
OUTDOOR FAN MOTOR						
INDOOR FAN MOTOR						
EXHAUST AIR MOTOR						
ELECTRIC HEATER						KW

MINIMUM CLEARANCES TO COMBUSTIBLE MATERIALS

FURNACE CABINET ____ INCH WARM AIR PLENUM ____ INCH

DEGAGEMENTS MINIMAUX AUX MATIERES COMBUSTIBLES

BLINDAGE de FOURNAISE ____ POUCE PLENUM a AIR CHAUD ____ POUCE

MAXIMUM OUTPUT AIR TEMPERATURE ____ °F

MAXIMUM EXTERNAL STATIC PRESSURE ____ INCHES WC

FACTORY CHARGED EACH SYSTEM ____ LBS OF R-22

FOR INSTALLATION SEE PACKAGE ____

TEST PRESSURE HIGH — 300 PSIG LOW — 300 PSIG

UNIT WEIGHT ____ LBS

FOR NONRESIDENTIAL INSTALLATION ONLY

The Trane Company La Crosse WI 54601-7599 Made in U.S.A. X39660154-01

Drwg. X39660015

Safety and Operating Precautions

1. Never open any access panels to service or inspect the unit without first disconnecting the unit from the electrical power source. Lock the disconnect in the open position to prevent accidental unit start-up.

2. Keep hands, tools, clothing, etc. away from the unit fans when the unit is operating.

3. Never attempt repairs or inspection of electrical circuitry unless the unit disconnect switch is open. High voltage is present in some areas of the control panels when the disconnect switch is closed.

4. Do not steam-clean refrigerant coils; applying heat to these coils will cause unsafe pressures to build up within them. Be sure to refer to the coil cleaning instructions provided in the "Maintenance" section of this manual.

5. Whenever the unit disconnect switch is open during routine maintenance or servicing, power to the compressor crankcase heaters is interrupted. If the unit disconnect is open more than 4 hours and the crankcase heater is NOT recycled for at least 8 hours before unit start-up, compressor mechanical damage may result.

6. Rainy weather can increase the potential hazards of electrical shock when servicing electrical equipment. Exercise extreme care when servicing a unit located near standing water.

Unit Specifications

Several tables are provided here to summarize important, general information about SPHA 20 and 25-ton heat pump units. Table 1 includes coil information, filter sizes, and fan data, while Tables 2 and 3 provide unit electrical data.

Unit Description

Each SPHA 20 and 25-ton heat pump is a self-contained unit with factory-installed internal piping and wiring. Two compressors and outdoor coils, and a dual-circuited indoor coil provide two-stage cooling between 70 F and -20 F. Factory-installed supplementary electric heat is available on an optional basis.

Hinged access doors are provided to enhance the serviceability of the unit filters, controls, indoor coil, indoor fans, fresh air dampers (optional), and exhaust air options. Refer to Figures 2 and 3 for access panel locations. Figure 4 illustrates the placement of the major unit components, while Figures 5 and 6 illustrate the control panel assemblies.

Figure 2
Compressor End of SPHA Unit

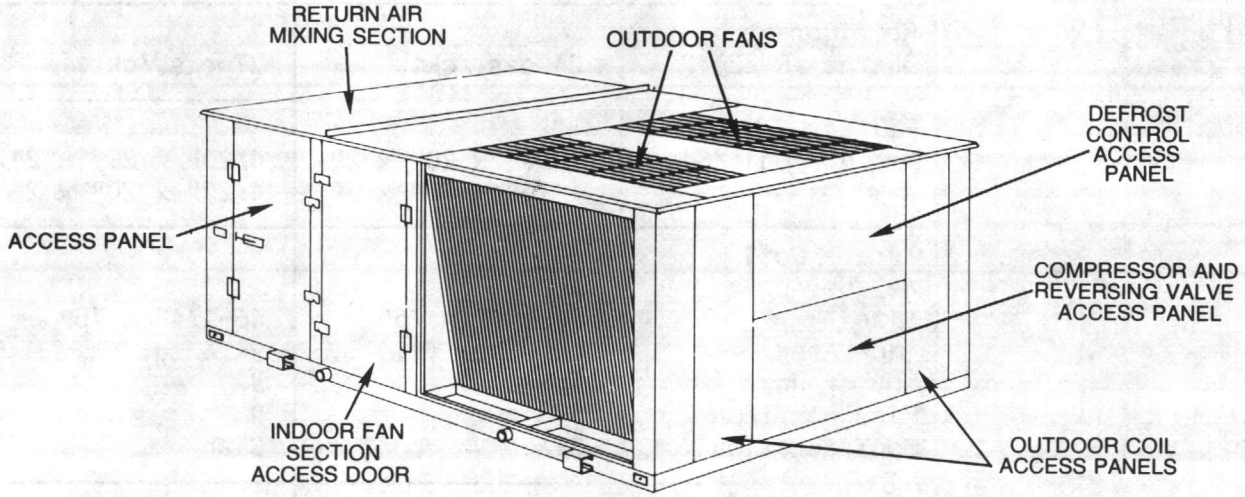

Figure 3
Fresh Air Option End of SPHA Unit

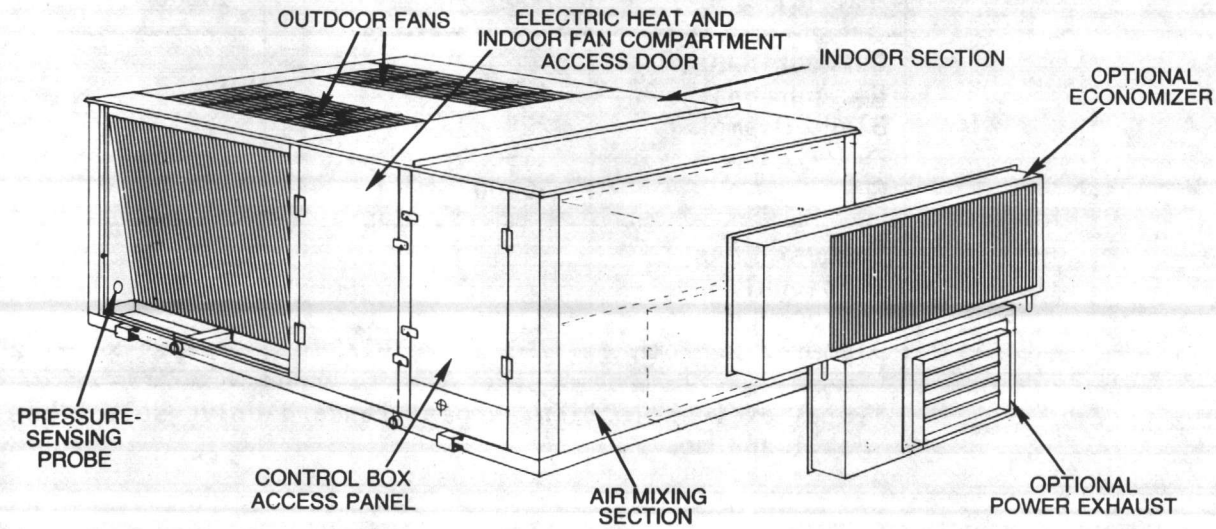

Table 1
SPHA General Unit Data

Unit Characteristic(s)	SPHA-200	SPHA-250
Refrigerant Charge (R-22)	24 ozs./ckt.	27 ozs./ckt.
Filters		
No. per Unit/Size	4/20" x 20" x 2", 4/16" x 20" x 2"	4/20" x 25" x 2", 4/20" x 20" x 2"
Indoor Coil		
No. per Unit	1	1
Size	35-5/8" x 76"	46-1/4" x 76"
Face Area	18.8 sq. ft.	24.4 sq. ft.
No. of Rows	3	3
Fins per Inch	9	9
Configuration	Slab	Slab
Outdoor Coils		
No. per Unit	2	2
Size	35-5/8" x 60"	46-1/4" x 60"
Face Area per Coil	14.8 sq. ft.	19.3 sq. ft.
No. of Rows	3	3
Fins per Inch	12	14
Configuration	Slab	Slab
Indoor Fan		
No. per Unit	2	2
Diameter x Width	12" x 12"	15" x 15"
RPM Range*	735 - 1100	735 - 1100
Nominal CFM	8000	10000
Outdoor Fans		
No. per Unit	4	4
Blade Diameter	22"	22"
RPM	1150	1150
CFM	16400	17400
Exhaust Fans (Optional)		
No. per Unit	2	2
Diameter x Width	7-1/2" x 7-1/2"	7-1/2" x 7-1/2"

*Total drive selection across standard drive selections no. 1 and no. 2.

Table 2
SPHA Unit Electrical Data

Unit Size	w/Accessory	Rated Voltage	MCA	RFS	MFS
SPHA-2006	Unit Only	200/60/3	117.4	125	150
	Unit w/Power Exhaust		123.4	125	150
	Unit w/30 Kw Heater		208.6	175	200
	Unit w/40 Kw Heater		243.3	225	250
	Unit w/50 Kw Heater		278.0	250	250
	Unit w/60 Kw Heater		312.7	250	300
	Unit w/80 Kw Heater		382.1	300	350
SPHA-2003	Unit Only	230/60/3	102.0	110	125
	Unit w/Power Exhaust		107.2	110	125
	Unit w/30 Kw Heater		191.3	175	200
	Unit w/40 Kw Heater		221.3	200	225
	Unit w/50 Kw Heater		251.4	225	250
	Unit w/60 Kw Heater		281.5	250	250
	Unit w/80 Kw Heater		341.6	300	300
SPHA-2004	Unit Only	460/60/3	51.0	50	60
	Unit w/Power Exhaust		53.6	50	60
	Unit w/ 30 Kw Heater		91.4	80	90
	Unit w/ 40 Kw Heater		106.4	90	110
	Unit w/ 50 Kw Heater		121.4	110	110
	Unit w/ 60 Kw Heater		136.5	110	125
	Unit w/ 80 Kw Heater		166.5	125	150
	Unit w/100 Kw Heater		196.6	150	175
SPHA-2005	Unit Only	575/60/3	40.8	40	50
	Unit w/Power Exhaust		42.9	45	50
	Unit w/ 30 Kw Heater		73.1	70	70
	Unit w/ 40 Kw Heater		85.1	80	80
	Unit w/ 50 Kw Heater		97.1	80	90
	Unit w/ 60 Kw Heater		109.1	90	100
	Unit w/ 80 Kw Heater		133.2	110	125
	Unit w/100 Kw Heater		157.2	125	125

(Table 2 continued on next page . . .)

Table 2
(Continued from Previous Page)

Unit Size	w/Accessory	Rated Voltage	MCA	RFS	MFS
SPHA-2506	Unit Only	200/60/3	144.3	150	175
	Unit w/Power Exhaust		150.0	150	175
	Unit w/30 Kw Heater		233.9	225	250
	Unit w/40 Kw Heater		268.6	250	250
	Unit w/50 Kw Heater		303.3	250	300
	Unit w/60 Kw Heater		337.9	300	300
	Unit w/80 Kw Heater		407.3	350	350
SPHA-2503	Unit Only	230/60/3	125.4	125	150
	Unit w/Power Exhaust		130.4	125	150
	Unit w/30 Kw Heater		215.4	200	225
	Unit w/40 Kw Heater		245.5	225	250
	Unit w/50 Kw Heater		275.5	250	250
	Unit w/60 Kw Heater		305.6	250	300
	Unit w/80 Kw Heater		365.7	300	350
SPHA-2504	Unit Only	460/60/3	62.7	60	80
	Unit w/Power Exhaust		65.2	70	80
	Unit w/ 30 Kw Heater		102.6	90	110
	Unit w/ 40 Kw Heater		117.7	110	125
	Unit w/ 50 Kw Heater		132.7	110	125
	Unit w/ 60 Kw Heater		147.7	125	125
	Unit w/ 80 Kw Heater		177.8	150	150
	Unit w/100 Kw Heater		207.9	175	175
SPHA-2505	Unit Only	575/60/3	50.5	50	60
	Unit w/Power Exhaust		52.6	50	70
	Unit w/ 30 Kw Heater		82.5	80	90
	Unit w/ 40 Kw Heater		94.5	90	100
	Unit w/ 50 Kw Heater		106.5	90	110
	Unit w/ 60 Kw Heater		118.6	100	110
	Unit w/ 80 Kw Heater		142.6	126	125
	Unit w/100 Kw Heater		166.7	125	150

Notes:

1. All wiring data is calculated in accordance with NEC 440 guidelines.
2. Data given reflects maximum simultaneous loads that can occur. Unit-only and unit-with-power-exhaust data reflects concurrent load during cooling. Unit-with-electric-heat data is based on the maximum concurrent load during heating when the power exhaust is not operating.

Table 3
SPHA Motor Electrical Data

Motor Electrical Charac.	200/60/3		230/60/3		460/60/3		575/60/3	
	SPHA -200	SPHA -250	SPHA -200	SPHA -250	SPHA -200	SPHA -250	SPHA -200	SPHA -250
Voltage Utilization Range	187-253		187-253		414-506		517-633	
Compressor								
No. per Unit	2	2	2	2	2	2	2	2
Motor Kw Each (1)	11.9	14.1	11.9	14.1	11.9	14.1	11.9	14.1
Type Start	XL	XL	XL	XL	XL	XL	XL	XL
RLA Each (1)	40.3	48.8	35.0	42.4	17.5	21.2	14.0	17.0
LRA Each (2)	185.0	220.0	185.0	220.0	93.0	110.0	75.0	88.0
Indoor Fan								
No. per Unit	1	1	1	1	1	1	1	1
Motor Kw (1)	2.6	3.7	2.6	3.7	2.6	3.7	2.6	3.7
BHP	5	7.5	5	7.5	5	7.5	5	7.5
FLA (2)	17.5	25.3	15.2	22.0	7.6	11.0	6.1	9.0
Outdoor Fan								
No. per Unit	4	4	4	4	4	4	4	4
Motor Kw Each (1)	0.6	0.6	0.6	0.6	0.6	0.6	0.6	0.6
BHP Each	0.5	0.5	0.5	0.5	0.5	0.5	0.5	0.5
FLA Each (2)	2.3	2.3	2.0	2.0	1.0	1.0	0.8	0.8
Exhaust Fan (Optional)								
Motor Kw (1)	1.4	1.4	1.4	1.4	1.4	1.4	1.4	1.4
BHP	1.5	1.5	1.5	1.5	1.5	1.5	1.5	1.5
FLA (2)	6.0	6.0	5.2	5.2	2.6	2.6	2.1	2.1

Notes:
1. Rated at ARI cooling conditions (i.e., 95 F ambient, 80 F dry bulb/67 F wet bulb indoor).
2. Full load amps (FLA) and rated load amps (RLA) as listed on unit nameplate per NEC.

Figure 4
SPHA Unit Components
(Overhead View of Unit
w/Top Cover Removed)

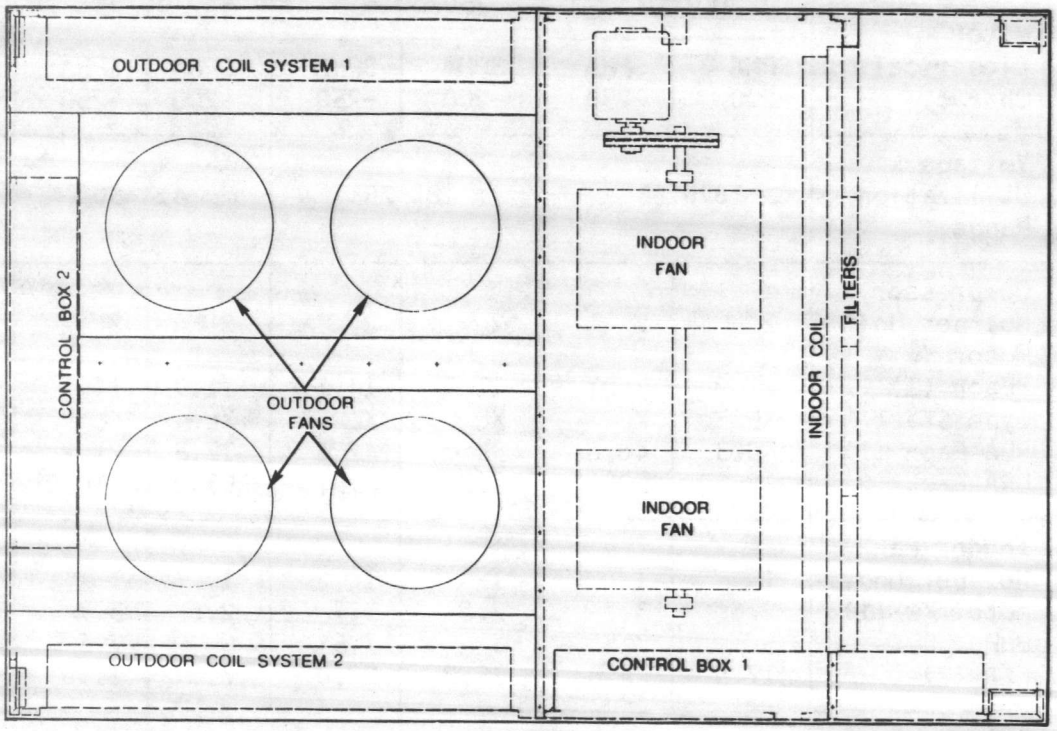

Drwg. 4450-0608A

Figure 5
Control Panel Assembly:
Control Panel No. 1

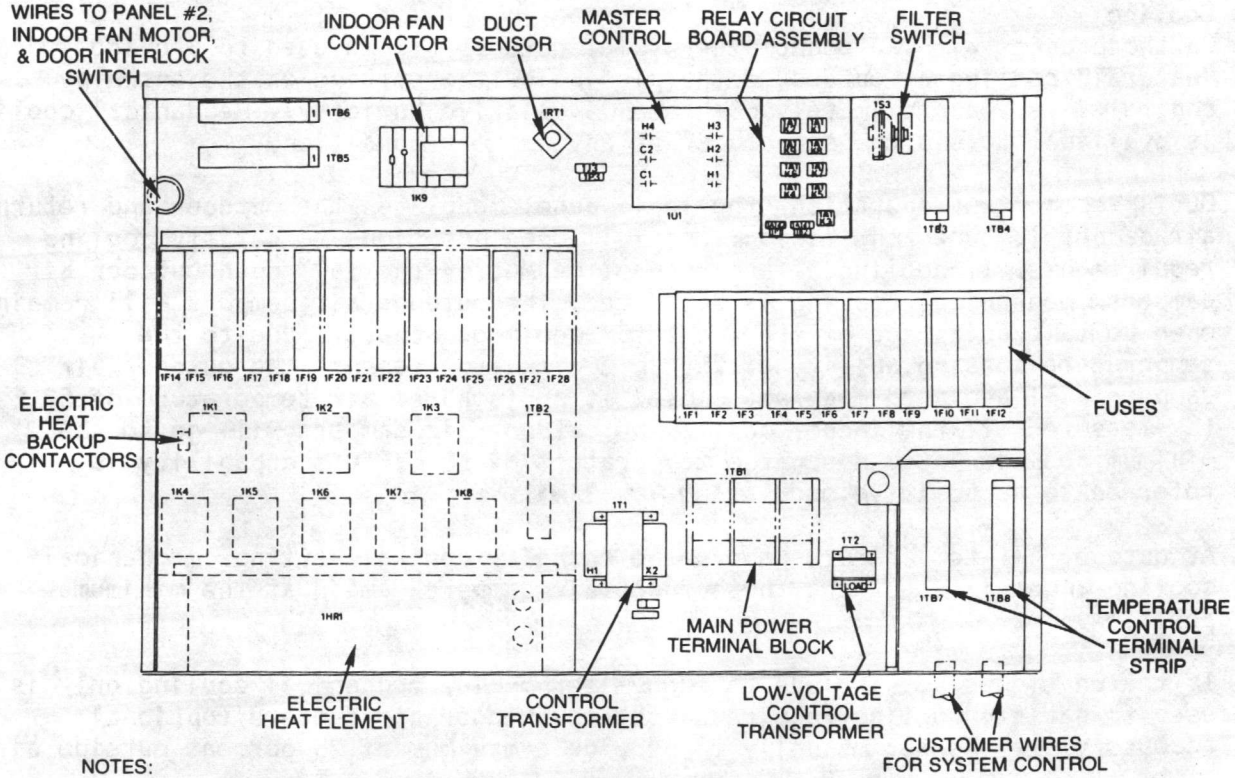

NOTES:

1. SEE UNIT WIRING DIAGRAMS FOR SPECIFIC WIRE CONNECTIONS.
2. FILTER SWITCH (1S3) IS USED WITH OPTIONAL REMOTE CONTROL PANEL ONLY.
3. CONTROL COMPONENTS ILLUSTRATED ARE TYPICAL OF SPHA UNITS EQUIPPED WITH 5-CIRCUIT ELECTRIC HEAT, ECONOMIZER AND POWER EXHAUST.
4. SEE FIGURE 4 FOR LOCATION OF THIS PANEL IN THE UNIT.

Figure 6
Control Panel Assembly:
Control Panel No. 2

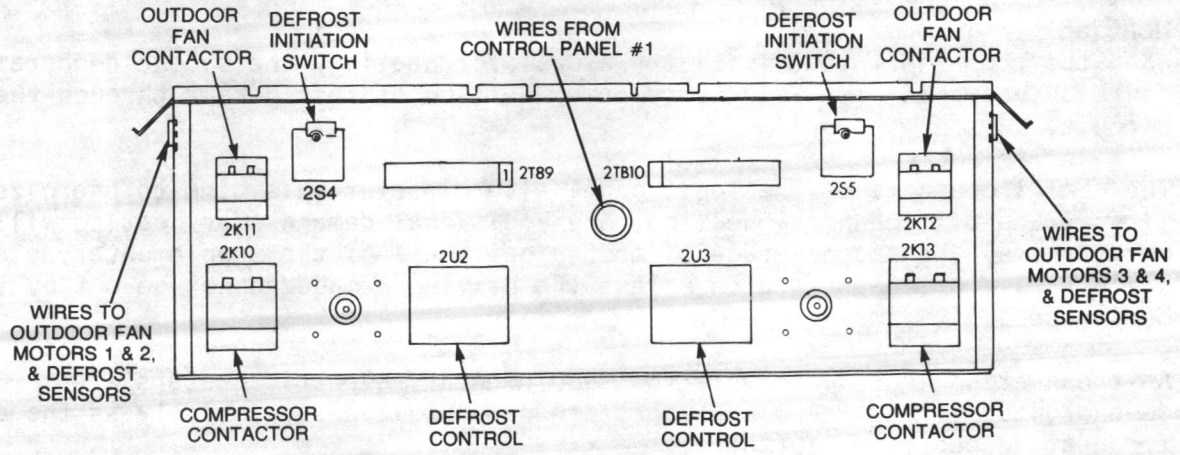

NOTES:

1. SEE UNIT WIRING DIAGRAMS FOR SPECIFIC WIRE CONNECTIONS.
2. SEE FIGURE 4 FOR LOCATION OF THIS PANEL IN THE UNIT.

System Operation

Cooling

On those units with an economizer cycle, outdoor air is used to provide "natural" cooling at outdoor enthalpies below the setting on the enthalpy control (i.e., approximately 63 F at 50% relative humidity). Mechanical cooling is available to aid the economizer at any ambient condition.

During economizer operation, the logic panel modulates the outdoor and return air dampers between the minimum and full open positions to satisfy cooling requirements. If cooling demands cannot be met by the full open outdoor air dampers, mechanical cooling is activated. The outdoor air dampers will remain open to take advantage of free, natural cooling. However, due to the temperature-sensing ability of the unit discharge sensor, the outdoor air dampers will begin to modulate closed at a discharge air temperature of 62 F (as measured off the indoor coil). The outdoor air dampers will go to the minimum position at a discharge temperature of 50 F; this capability is referred to as **positive modulating low limit.**

At outdoor air temperatures above the enthalpy control setting, mechanical cooling alone is used, and the outdoor air dampers remain at the minimum position.

If the unit does not include an economizer cycle, mechanical cooling only is used to satisfy cooling requirements. The outdoor air dampers (optional accessory) may be set manually to provide a maximum of 25 percent outside air.

As the demand for cooling decreases, individual stages of mechanical and economizer cooling are deactivated until no further cooling requirements exist.

Refer to Figure 7 for a schematic representation of the heat pump operating in the mechanical cooling mode.

Heating

When the room thermostat initiates a call for heating, the solenoid-operated four-way valve is energized to reverse the flow of refrigerant through the circuit.

The HEAT 1 contacts of the logic panel also close at this time to energize the first stage of mechanical heating. Any additional demands for heating will be met first by the second stage of mechanical heating; the supplementary electric heaters will not be staged on unless the heating demand cannot be met by the compressors.

As the heating load decreases, the supplementary electric heaters are de-energized first. The compressors are de-energized sequentially as the demand for heating decreases further.

See Figure 8 for a schematic illustrating heat pump operation in the mechanical heating mode.

Figure 7
SPHA Mechanical Cooling Operation

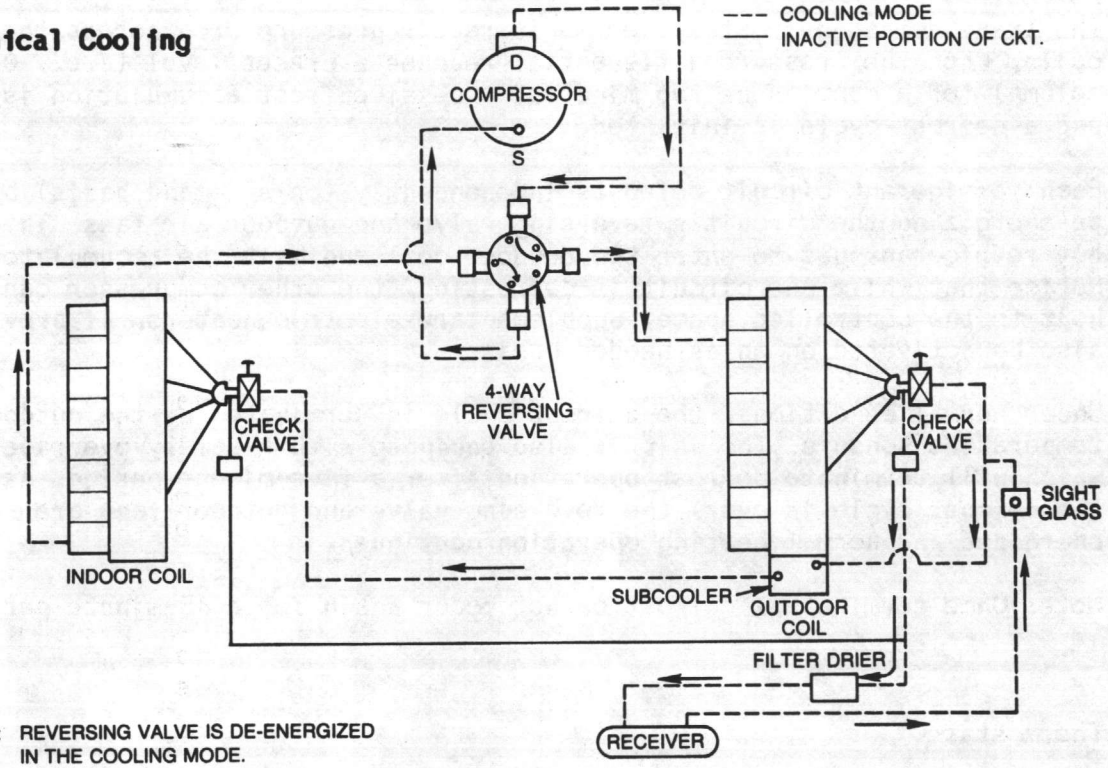

NOTE: REVERSING VALVE IS DE-ENERGIZED IN THE COOLING MODE.

Figure 8
SPHA Mechanical Heating Operation

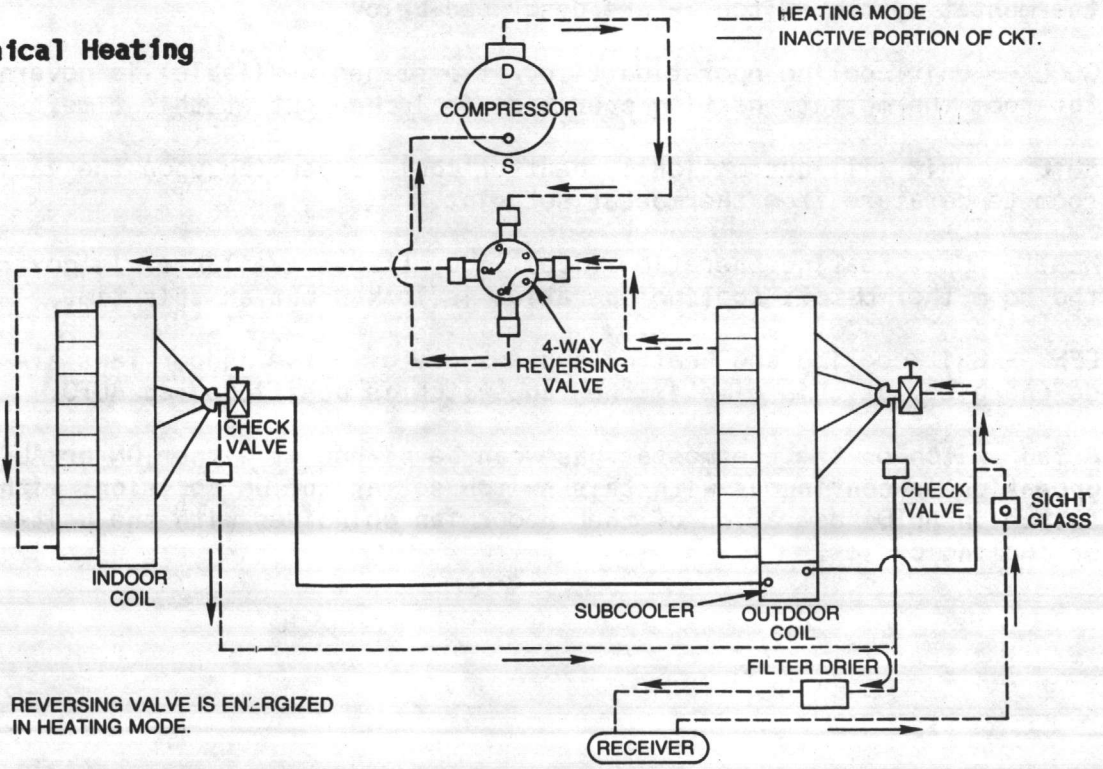

NOTE: REVERSING VALVE IS ENERGIZED IN HEATING MODE.

Defrost

The Trane demand-defrost system monitors air pressure drop across the outdoor coils. When the pressure differential reaches a preset level (i.e., 0.6" water column) for a continuous two minutes, excessive frost accumulation is indicated and a defrost cycle is initiated.

Each refrigerant circuit defrosts independently (on a demand basis) by de-energizing the circuit's reversing valve and outdoor air fans. This allows hot refrigerant gas to enter the outdoor coil and melt the accumulated frost. Notice that while one circuit is defrosting, the other compressor can supply heat to the controlled space. Supplementary electric heaters, if provided, can also be activated on an as-needed basis.

Under normal conditions, the defrost cycle is terminated by the outdoor coil temperature sensors. The unit is also equipped with a safety override timer which will terminate defrost operation after a five-minute period. As soon as the defrost cycle is over, the reversing valve and outdoor fans are again energized and normal heating operation continues.

Note: Once terminated, defrost cannot occur again for a 45-minute period.

Thermostat

Operation of SPHA 20 and 25-ton units is governed by a remote, four function room thermostat specifically designed for use with Trane heat pumps. See Figure 9. These four functions -- which are determined by the position of the thermostat system switch -- are described below.

COOL -- Unit cooling operation (i.e., two stages available) is governed by the room thermostat; heating operation is locked out at this time.

AUTO -- Unit will automatically heat or cool, depending upon the variation of room temperature from thermostat setpoint.

HEAT -- Unit heating operation (i.e., four stages available) is governed by the room thermostat; cooling operation is locked out at this time.

OFF -- Unit cooling and heating systems are off; the indoor fans are also de-energized at this time if the fan switch is positioned at AUTO.

A fan switch on the thermostat base can be placed at either ON or AUTO. Fan operation is continuous with this switch set at the ON position; with the switch in AUTO, operation of the indoor fan coincides with the unit's heating or cooling cycles.

Remote Control Panel

An optional remote control panel (shown in Figure 10) is available for use in conjunction with the room thermostat, and allows the owner/operator to monitor system functions from a remote location. Notice that when the remote control panel is provided, the fan and system switch are included there rather than on the thermostat; the functions of these switches will not change. (Refer to "Thermostat" for the descriptions of these switch functions.)

Figure 9
Room Thermostat Terminal Identification

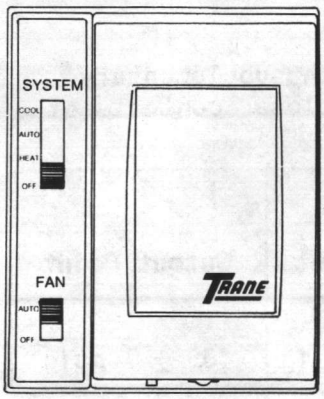

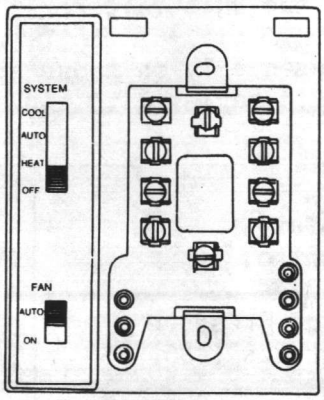

TERMINAL IDENTIFICATION

1 - (-) 20 VDC regulated (neutral) to thermostat
2 - (+) 20 VDC regulated (hot) to thermostat
3 - duct sensor input to thermostat
4 - cooling output signal to logic panel
5 - heating output signal to logic panel
6 - not used at this time
7 - not used at this time
8 - not used at this time
9 - 24 VAC input
10 - fan switching to indoor fan relay

Figure 10
Remote Control Panel (Optional)

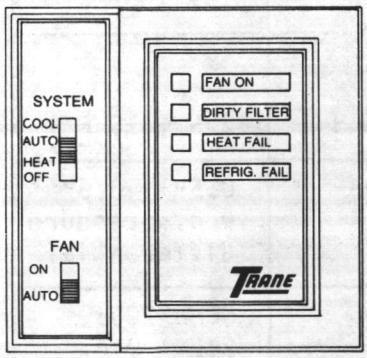

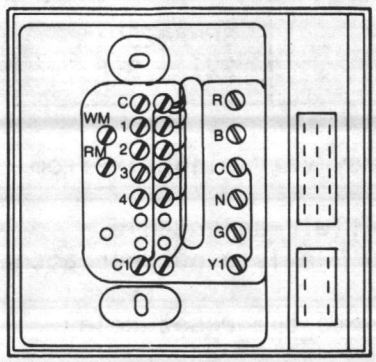

REMOTE PANEL (BACK VIEW)

TERMINAL DESIGNATIONS

R - 24 VAC INPUT
G - FAN SWITCHING TO INDOOR FAN RELAY
N - HEATING INPUT SIGNAL FROM ROOM THERMOSTAT, HEAT, AUTO SWITCHING
B - HEATING OUTPUT SIGNAL TO LOGIC PANEL; HEAT, AUTO SWITCHING
WM - COOLING INPUT SIGNAL FROM ROOM THERMOSTAT; COOL, AUTO SWITCHING
RM - COOLING OUTPUT SIGNAL TO LOGIC PANEL; COOL, AUTO SWITCHING
O - JUMPERED - NO WIRING CONNECTIONS NECESSARY
Y1 - JUMBERED - NO WIRING CONNECTIONS NECESSARY
1 - "FAN ON" LIGHT
2 - "DIRTY FILTER" LIGHT
3 - "HEAT FAIL" LIGHT
4 - "REFRIG. FAIL" LIGHT
C - COMMON TERMINAL FOR PANEL LIGHTS, JUMPERED
C1 - COMMON TERMINAL FOR PANEL LIGHTS, JUMPERED

SCHEMATIC WIRING DIAGRAM

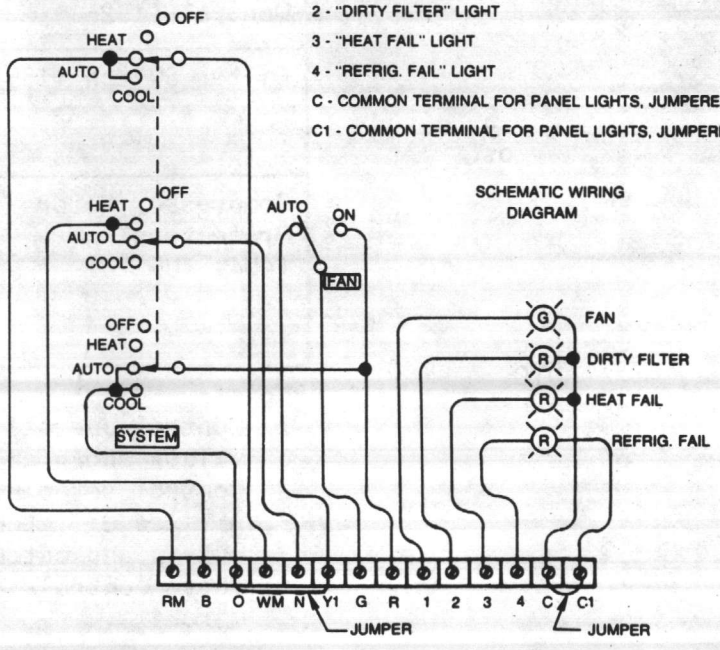

Note: Operation of the remote control panel interrupts the heating and cooling signals from the room thermostat.

In addition to the system and fan switches, the remote control panel is equipped with four signal lights:

1. The green **FAN ON** light monitors indoor fan operation and is illuminated whenever the indoor fans are running; it is wired in parallel with the indoor fan relay.

2. The red **DIRTY FILTER** light illuminates whenever the filter switch (which is normally open, and wired in series with the signal light) closes due to a preset pressure drop across the unit filters.

3. The red **HEAT FAIL** light is used only on those systems with supplementary electric heat, and is wired in series with the normally-closed contacts of

Table 4
Safety Control Settings

Safety Control	Cut-In Point	Cutout Point
High Pressure Cutouts (4S6, 4S8)[4]	300 ± 10 psig	405 ± 7 psig
Low Pressure Cutouts (4S7, 4S9)	@ 22 psig	@ 7 psig
Electric Heat Limit Control (1S1)	105 ± 6 F	139 ± 5 F
Electric Heat Linear Limit Control (1S2)	See Note 3	225 ± 15 F
Filter Switch (1S3)	----------	0.5" ± 0.5" w.c. pressure differential
Compressor Motor Protectors (4U4, 4U5)[4]		SPHA-200: 212 ± 9 F SPHA-250: 221 ± 9 F

Notes:
1. Control operating points may vary slightly from values shown above.
2. Control setpoints are not field-adjustable.
3. A fixed differential of 40 F exists between actual cut-in and cutout points.
4. These controls are wired into the reset relay circuits.

one of the backup contactors for the electric heat coils. The backup contactors are always energized (i.e., so the normally-closed contacts are open and the light remains off), but cycle on the coil bank high-limit switches. Therefore, if a high-limit switch opens, the HEAT FAIL light will illuminate.

4. The red **REFRIG. FAIL** light illuminates whenever the first or second-stage reset relay energizes; this indicates that the unit has tripped out on either the compressor motor protector, high pressure cutout, or low pressure cutout.

   CAUTION: To avoid possible equipment damage, do NOT reset the unit until the condition which caused the motor protector to trip is determined and corrected.

Safety Controls

The following paragraphs briefly describe the safety controls used to protect each SPHA unit from a number of abnormal operating conditions. Refer to Table 4 for a summary of the safety control setpoints.

High Pressure Cutout
(4S6, 4S8)

A high pressure cutout is located on the discharge line of each compressor, as shown in Figure 11. Designed to stop compressor operation at high condensing pressures, the normally-closed contacts of this cutout open when the discharge pressure reaches 405 ± 7 psig, and close when the pressure drops to 300 ± 10 psig. Because the contacts of this device are located in the reset relay circuit of each compressor, operation of the affected refrigerant circuit cannot resume until the unit is manually reset.

CAUTION: To avoid possible equipment damage, do NOT reset the unit until the condition which caused the high pressure cutout to trip is determined and corrected.

Figure 11
High and Low Pressure
Cutout Locations

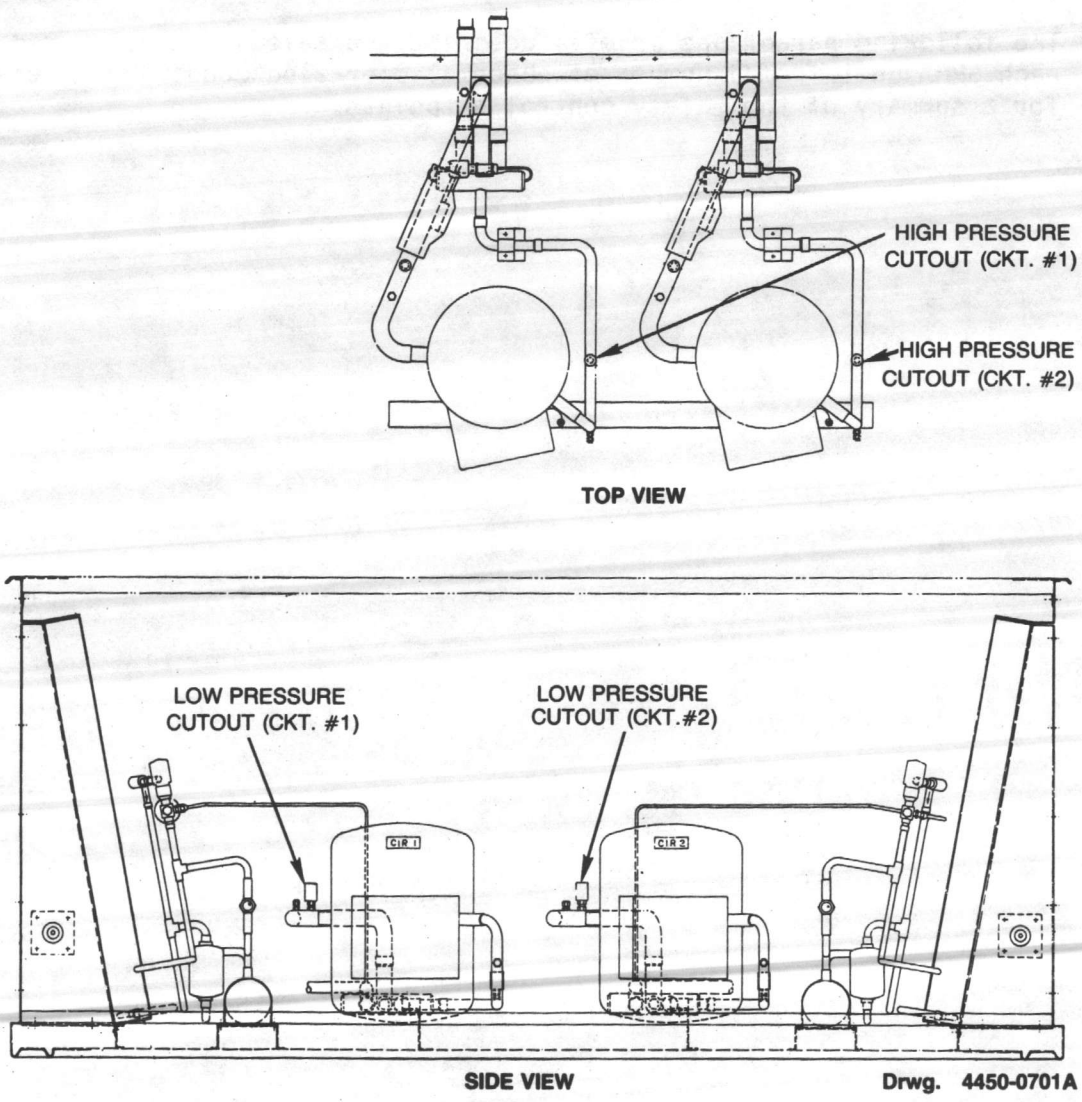

Low Pressure Cutout
(4S7, 4S9)

Low pressure cutouts are installed near the compressor on the suction line of each refrigerant circuit; see Figure 11. The normally-closed contacts of each cutout close when the suction pressure reaches approximately 22 psig, and open if the pressure drops to approximately 7 psig. Because the contacts of this device -- like those of the high pressure cutouts -- are located in the reset relay circuit of each compressor, operation of the affected refrigerant circuit cannot resume until the unit is manually reset.

CAUTION: To avoid possible equipment damage, do NOT reset the unit until the condition which caused the low pressure cutout to trip is determined and corrected.

Compressor Motor
Protectors (4U4, 4U5)

Compressor motor protectors are solid-state devices designed to protect the compressor motor from operating at high temperatures. Each motor protector package is installed in the compressor junction box, and consists of an automatic reset protection module and three electrothermal PTC (i.e., positive temperature coefficient) sensors which are embedded in the motor windings. These sensors are characterized by a relatively flat temperature-versus-resistance curve until a predetermined temperature is reached. At that point, any additional increase in temperature causes a sharp increase in the sensor's resistance value.

The protection module monitors the increase in sensor resistance until the cutout point is reached (i.e., 212 $\pm$ 9 F for SPHA 20-ton units, and 221 $\pm$ 9 F for SPHA 25-ton units). At that time, the module opens the circuit between Terminals M1 and M2, causing the unit to lock out. Since the motor protector is wired into the reset relay circuit, the unit must be reset manually before unit operation can resume.

CAUTION: To avoid possible equipment damage, do NOT reset the unit until the condition which caused the motor protector to trip is determined and corrected.

Reset Relays
(1A1K1, 1A1K2)

A set of reset relay contacts is wired into the safety circuit of each compressor. These contacts open automatically whenever the high pressure cutout, low pressure cutout, or compressor motor protector trips out. Be sure to diagnose and correct the condition that caused the trip-out before resetting the control circuit.

To reset the 1A1K1 or 1A1K2 contacts, adjust the system switch on the room thermostat (or remote control panel) from AUTO (or HEAT/COOL) to OFF and back to AUTO.

Filter Switch
(1S3)
The optional filter switch is factory-installed on those SPHA units with the remote control option, and is located in the upper right-hand corner of Unit Control Panel No. 1. See Figure 5.

This switch is a differential pressure-sensing device that compares the airflow entering the filters against that leaving the filters. If the device senses a pressure drop above the acceptable limit (i.e., 0.5" ± .05" water column), its normally-open contacts close and the red DIRTY FILTER light on the remote control panel illuminates. This signal indicates that the unit filter section should be checked for obstructions, dirty filters, etc.

Electric Heat High-Limit
Switches (1S1, 1S2)
The supplementary electric heaters (optional) consist of multiple banks of elements with automatic reset high-limit controls. High-limit protection for the entire electric heat section is provided by independent backup contactors. Electric heat limit control 1S1 and linear limit control 1S2 are wired in series with these backup contactors, and open at different temperature setpoints. Refer to Table 4 for the specific cut-in and cutout points of these high-limit controls.

Periodic Maintenance

Perform all of the indicated maintenance procedures at the intervals scheduled. This will prolong the life of the unit and reduce the possibility of costly equipment failure.

Monthly

Conduct the maintenance inspections outlined below once each month on a year-round basis:

WARNING: OPEN AND LOCK UNIT DISCONNECT TO PREVENT INJURY OR DEATH FROM ELECTRICAL SHOCK OR CONTACT WITH MOVING PARTS.

[] Inspect air filters; if necessary, the filters should be replaced. See Table 1 for filter sizes.

[] Check drain pans and condensate piping to ensure that they are clean and leak-free.

[] Manually rotate fans to ensure proper operation. Inspect fan mounting hardware for tightness.

[] Inspect indoor (and exhaust, if applicable) fan belts. If frayed or worn, replace them using the instructions provided in the "Maintenance Procedures" section of this manual.

Note: If belt replacement is necessary, be sure to install a new **set** to ensure equal belt length. Do not stretch the belts over the sheaves -- loosen the adjustable motor mounting base.

[] Inspect indoor and outdoor coils for dirt and foreign debris. If coils appear dirty, clean them according to the instructions provided in "Maintenance Procedures". (Typically, coils must be cleaned at least once each year.)

[] Verify that optional economizer operates properly and smoothly.

Semiannually

WARNING: OPEN AND LOCK UNIT DISCONNECT TO PREVENT INJURY OR DEATH FROM ELECTRICAL SHOCK OR CONTACT WITH MOVING PARTS.

[] Perform all monthly maintenance inspections.

[] Remove any accumulation of dust and dirt from the unit casing.

[] Inspect control panel wiring to ensure that connections are tight, that insulation is intact, and that no water damage is evident.

[] Check unit operating pressures and superheat; record readings in the "Maintenance Log". (Typical unit operating pressures for unit operation in the mechanical cooling and heating modes are provided in Tables 5 and 6 for your reference.)

[] At the beginning of the heating season, inspect the optional electric heat elements and control panel. Tighten any loose connections. (**Note:** Discoloration of the insulation indicates an excessive heat condition probably caused by a loose connection or moisture.)

Annually
Perform the following maintenance operations once every year (i.e., usually at the beginning of the cooling season):

WARNING: OPEN AND LOCK UNIT DISCONNECT TO PREVENT INJURY OR DEATH FROM ELECTRICAL SHOCK OR CONTACT WITH MOVING PARTS.

[] Perform all monthly and semiannual maintenance inspections.

[] Remove corrosion from unit surfaces and repaint.

[] Check condition of gasket around control panel door; it must fit correctly and be in good condition to prevent water leakage.

[] Inspect all refrigerant piping and fittings for leaks.

[] Check fan assemblies for loose sheaves, excessive end play, abnormal vibration and noise (i.e., could indicate wornout sheaves).

[] Determine whether or not lubrication of fan motor bearings is needed.

SPHA fan motor bearings are permanently sealed and do not require greasing; all motor bearing housings are packed with the proper amount of grease before leaving the factory. The length of time allowed to elapse before adding grease must be determined by the motor user since it depends upon the severity of the operating conditions. Typically, motors of 1 to 7-1/2 horsepower are relubricated at 7-year intervals, while those of 10 to 40 horsepower are relubricated at 4-year intervals.

Blower motors and shaft bearings should be greased once each year. Remove the vent plugs and clean out the openings. Add fresh grease (i.e., G.E. Specification D6A2C5, Chevron SR12, Alvania #2, or equivalent), using a hand grease gun, until a light bead appears all around the seal. **Do not over-lubricate!**

After greasing (and with the unit de-energized and the fan stationary), check the bearing locking setscrews -- or other locking device -- to ensure that the shaft is held securely. Make sure that all bearing braces are tight.

Table 5
Cooling Mode Compressor Suction and Discharge Pressures (Psig)

Model	Entering Indoor Coil (F)		Outdoor Temp.	Standard Air Volumes									
				7000 Cfm		8000 Cfm		9000 Cfm		10000 Cfm		11000 Cfm	
	DB	WB		Sct.	Dsch.	Sct.	Dsch.	Sct.	Dsch.	Sct.	Dsch.	Sct.	Dsch.
SPHA-200	75	61	85 F	60	239	62	241	62	243	----	----	----	----
	80	67		67	247	69	249	71	251	----	----	----	----
	85	73		76	257	78	259	80	260	----	----	----	----
	75	61	95 F	62	272	63	273	65	275	----	----	----	----
	80	67		69	279	72	282	73	283	----	----	----	----
	85	73		79	289	80	288	81	293	----	----	----	----
	75	61	105 F	64	306	66	309	67	310	----	----	----	----
	80	67		72	314	73	317	75	318	----	----	----	----
	85	73		81	325	83	326	85	329	----	----	----	----
	75	61	115 F	67	343	69	346	70	348	----	----	----	----
	80	67		75	352	77	354	78	356	----	----	----	----
	85	73		84	364	86	366	87	367	----	----	----	----
SPHA-250	75	61	85 F	----	----	----	----	61	239	63	241	63	242
	80	67		----	----	----	----	69	248	71	249	72	250
	85	73		----	----	----	----	78	257	79	259	81	260
	75	61	95 F	----	----	----	----	63	271	65	272	66	274
	80	67		----	----	----	----	71	279	73	283	74	282
	85	73		----	----	----	----	81	289	82	291	83	291
	75	61	105 F	----	----	----	----	66	306	67	307	68	309
	80	67		----	----	----	----	73	314	75	316	76	317
	85	73		----	----	----	----	83	325	84	326	86	327
	75	61	115 F	----	----	----	----	68	344	69	345	70	346
	80	67		----	----	----	----	74	352	80	356	79	355
	85	73		----	----	----	----	86	363	87	364	88	365

Note: Suction pressure is accurate to within ± 5 psi; discharge pressure is accurate to within ± 11 psi.

CAUTION: Do not use these pressures to determine unit refrigerant charge! Correct unit operating charge is shown on unit nameplate. To charge system accurately, Trane recommends use of a temperature-compensated refrigerant charging cylinder, or equivalent.

CAUTION: Never use sight glass method of charging unit with refrigerant! To ensure that unit is properly charged, any refrigerant added to system must be measured by weight. Failure to charge unit correctly will result in inefficient unit operation and possible equipment damage.

Table 6
Heating Mode Compressor
Suction and Discharge
Pressures (Psig)

Model	Outdoor Temp.	Standard Air Volumes									
		7000 Cfm		8000 Cfm		9000 Cfm		10000 Cfm		11000 Cfm	
		Sct.	Dsch.	Sct.	Dsch.	Sct.	Dsch.	Sct.	Dsch.	Sct.	Dsch.
SPHA-200	70 F	77	297	75	279	75	267	----	----	----	----
	60 F	63	270	63	256	62	246	----	----	----	----
	50 F	52	248	52	237	52	228	----	----	----	----
	47 F	49	243	49	232	49	224	----	----	----	----
	40 F	42	227	42	218	41	211	----	----	----	----
	30 F	35	212	35	205	35	199	----	----	----	----
	20 F	28	197	28	191	27	186	----	----	----	----
	17 F	26	193	26	187	26	182	----	----	----	----
	10 F	20	184	20	179	21	174	----	----	----	----
	0 F	15	174	15	170	15	166	----	----	----	----
SPHA-250	70 F	----	----	----	----	78	284	77	272	76	261
	60 F	----	----	----	----	64	261	64	251	64	243
	50 F	----	----	----	----	53	240	53	231	52	225
	47 F	----	----	----	----	50	235	47	233	49	221
	40 F	----	----	----	----	42	221	42	214	41	236
	30 F	----	----	----	----	35	208	35	202	35	197
	20 F	----	----	----	----	28	194	28	189	27	185
	17 F	----	----	----	----	26	190	23	186	26	182
	10 F	----	----	----	----	21	180	21	177	21	174
	0 F	----	----	----	----	15	172	15	169	15	166

Notes:
1. Suction pressure is accurate to within ± 5 psi; discharge pressure is accurate to within ± 11 psi.
2. All data assumes 70 F entering indoor coil.

CAUTION: Do not use these pressures to determine unit refrigerant charge! Correct unit operating charge is shown in unit nameplate. To charge system accurately, Trane recommends use of temperature-compensated refrigerant charging cylinder, or equivalent.

CAUTION: Never use sight glass method of charging unit with refrigerant! To ensure that unit is properly charged, any refrigerant added to system must be measured by weight. Failure to charge unit correctly will result in inefficient unit operation and possible equipment damage.

Operator's Maintenance Log (Sample)

Unit Operating Conditions			Date of Inspection			
Ambient Temperature (F)						
Evaporator Entering Air	Dry Bulb (F)					
	Wet Bulb (F)					
No. of Outdoor Fans Running						
Cooling Mode Operating Pressures (Psig)	Comp. #1	Suct.				
		Disch.				
	Comp. #2	Suct.				
		Disch.				
Heating Mode Operating Pressures (Psig)	Comp. #1	Suct.				
		Disch.				
	Comp. #2	Suct.				
		Disch.				
Superheat (4)	Circuit #1					
	Circuit #2					

Notes:

1. Check operating pressures (for each circuit) and superheat every six months or more frequently, if desired. The unit must be running and stabilized while these readings are taken.
2. Record operating pressures in psig; compare these readings with the values in Tables 5 and 6.
3. Do not operate the unit in the cooling mode at ambient temperatures below 45 F, or in the heating mode at ambient temperatures above 70 F.
4. To determine superheat, be sure to measure suction line temperature at the expansion valve bulb. (Typically, superheat ranges between 12 and 15 F, regardless of the operational mode.)

Maintenance Procedures

The remainder of this section is devoted to describing specific maintenance procedures which must be performed as a part of the unit's maintenance program. Before performing any of these operations, however, be sure that power to the unit is disconnected unless otherwise instructed.

WARNING: OPEN AND LOCK UNIT DISCONNECT TO PREVENT INJURY OR DEATH FROM ELECTRICAL SHOCK OR CONTACT WITH MOVING PARTS.

Coil Cleaning

Coils must be cleaned **at least once each year**, or more frequently if the unit is located in a "dirty" environment, to help maintain proper unit operating efficiency. Specific instructions for cleaning refrigerant coils are provided in the paragraphs which follow. Be sure to follow these instructions as closely as possible to avoid potential damage to the coils.

To clean refrigerant coils, the following equipment is required: a soft brush and either a garden pump-up sprayer or a high-pressure sprayer. In addition, a high-quality detergent must be used; suggested brands include "SPREX A.C.", "OAKITE 161", OAKITE 166", and "COILOX".

Note: If the detergent is strongly alkaline (i.e., has a pH value greater than 8.5) after mixing, an inhibitor must be added.

[] Cleaning Procedure:

1. Disconnect power to the unit.

   WARNING: OPEN AND LOCK UNIT DISCONNECT(S) TO PREVENT INJURY OR DEATH DUE TO ELECTRICAL SHOCK OR CONTACT WITH MOVING PARTS.

2. Remove enough panels and parts from the unit to gain access to the coil.

3. Straighten the coil fins with a fin rake, if necessary.

4. Use a soft brush to remove loose dirt and debris from both sides of the coil.

5. Mix the detergent with water according to the manufacturer's instructions. The detergent-and-water solution may be heated to a maximum of 150 F to improve its cleansing ability.

   WARNING: SPRAYING COIL WITH A SOLUTION HOTTER THAN 150 F MAY CAUSE COIL TO BURST, RESULTING IN POSSIBLE INJURY AND EQUIPMENT DAMAGE.

Figure 12
Belt Tension Gauge

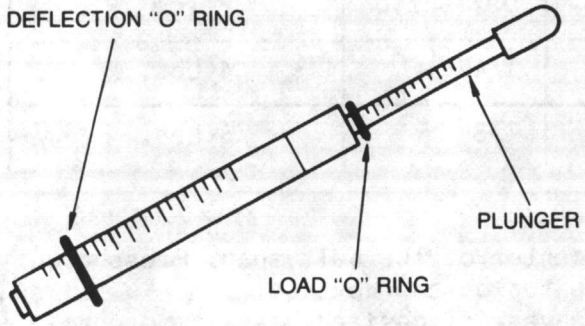

Figure 13
Using Belt Tension Gauge

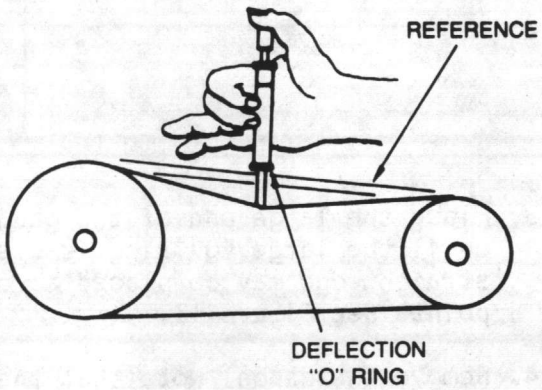

6. Place the detergent-and-water solution in the sprayer. **Be sure to follow these guidelines if a high-pressure sprayer is used:** (1) minimum nozzle spray angle is 15 degrees; (2) spray solution at 90 degrees to the coil face; (3) keep sprayer nozzle at least six inches from the coil; and, (4) sprayer pressure must not exceed 600 psi.

7. Spray the leaving air side of the coil first, then spray the entering air side of the coil. Allow the detergent-and-water solution to stand on the coil for five minutes.

   CAUTION: Do not spray motors or other electrical components. Moisture can cause equipment failure.

8. Rinse both sides of the coil with cool, clean water.

9. Inspect the coil. If it still appears to be dirty, repeat Steps 7 and 8.

10. Replace all unit panels and parts, and restore electrical power to the unit.

Fan Belt Adjustment

Fan belts on both the supply and exhaust air fans must be inspected periodically to assure proper unit operation. If frayed or worn, the belts must be replaced. **Be sure to install a matched set of belts to ensure equal belt length.** Do not stretch belts over the sheaves; instead, loosen the adjustable motor mounting base.

Adjust fan belt tension using either a Browning or Gates gauge, or equivalent. (See Figure 12.) These instruments are used as follows:

1. Measure the belt span between the sheaves and set the large "O" ring at 1/64 inch for each inch of belt span.

2. Set the load "O" ring at zero.

Table 7
Belt Tensioning

Air Handler	Deflection	Force
Indoor Fan	1/4"	4 Lbs.
Exhaust Fan	1/8"	3 Lbs.

3. Place the large end of the gauge at the center of the belt span. Press down until the large "O" ring is even with the top of the next belt. A straightedge may be placed across the sheaves, if desired, as a reference point. See Figure 13.

4. Remove the gauge. Note that the load "O" ring moved from zero and now indicates a number on the plunger scale. This number represents the pounds of force required to deflect the belt.

5. Check the reading against the "Deflection/Force" values shown in Table 7. If necessary, readjust the belt tension or call a qualified service organization.

CAUTION: Proper adjustment of fan belt tension is important to ensure optimal unit operation. Over or undertightening of the fan belt can result in belt slippage and excessive wear, sheave misalignment, and possible failure of fan motor mounts.

Note: Whenever a new fan belt is installed, be sure to check fan belt tension at least twice during the first day of operation. Normally, there will be a rapid decrease in belt tension until the belt is "run in". After the first day of operation, the belt should be checked on a monthly basis.

Limited-Period Shutdown and Start-Up Procedures

Use the procedure outlined below when the unit must be shutdown for **limited** periods of time:

1. Turn the thermostat system switch to the OFF position. (Leave the fan switch set at AUTO.)

2. Verify that the unit disconnect switch is closed; this will permit the continued operation of the compressor crankcase heater.

WARNING: THIS PROCEDURE IS NOT APPROVED FOR MAINTENANCE OR SERVICE SHUTDOWN! OBSERVE THE SAFETY WARNINGS PROVIDED IN THE "MAINTENANCE" SECTION OF THIS MANUAL; FAILURE TO DO SO MAY RESULT IN HAZARDOUS CONDITIONS AND POSSIBLE INJURY OR DEATH DUE TO ELECTRICAL SHOCK OR ENTANGLEMENT IN MOVING PARTS.

To restart the unit after a brief shutdown, simply adjust the thermostat system switch to the desired mode of operation (i.e., AUTO, HEAT, or COOL).

Seasonal Start-Up Procedure

Whenever the unit has been inoperative **with the disconnect switch open for four hours or more,** use this procedure to start the SPHA unit:

1. Complete the prestart-up checks listed below:

   WARNING: OPEN AND LOCK UNIT DISCONNECT TO PREVENT INJURY OR DEATH FROM ELECTRICAL SHOCK OR CONTACT WITH MOVING PARTS.

   [] Trace unit circuitry to ensure that actual wiring agrees with the "as built" wiring diagrams provided with the unit. The information in the title block of the wiring diagram should match the data appearing on the unit nameplate.

   [] Verify that actual line voltage at the unit falls within the utilization range specified on the compressor and unit nameplates.

   [] Ensure that unit fuse protection, all field-installed wiring, and the unit disconnect switch are sized properly (i.e., per all applicable codes, unit wiring diagram, unit nameplate, and the recommendations in the "Installation" section of this manual).

   [] Inspect all wiring connections; connections should be clean and tight.

   [] Rotate all fans manually to ensure that they move freely. Blower wheels and fans should be properly positioned and securely attached to the shaft. Airflow must be unobstructed.

   [] Inspect fan drives for proper alignment, and fan belts for proper tension; check sheave setscrews for tightness.

   [] Check refrigeration circuits for leaks; the entire length of each refrigerant circuit should be leak-free. (If leaks are found, correct the problem and weigh in a new charge of refrigerant.)

   [] Verify that all ductwork is properly insulated and lined with a vapor barrier.

   [] Ensure that the unit filter is in place, or that properly sized filters are installed in the return air duct system (or return air filter grilles).

   [] Inspect the condensate drain pans and drain piping to be sure that they are clear and will carry away all water.

2. Adjust the thermostat system switch to the OFF position.

3. Close the unit disconnect switch.

4. Allow the compressor crankcase heater to operate for a minimum of eight hours.

   CAUTION: Whenever the unit disconnect switch is opened during routine maintenance or servicing, power to the compressor crankcase heaters is interrupted. If the crankcase heaters are NOT recycled for eight hours before start-up, compressor mechanical damage may result.

5. Adjust the thermostat temperature indicator to the desired setpoint.

6. Set the thermostat system switch to the AUTO position (i.e., or HEAT/COOL as desired).

Trouble Analysis

Troubleshooting Chart

The chart on the following page(s) is provided to serve as an aid for identifying the cause of any system malfunctions that may occur. To use this chart properly, find the appropriate complaint or symptom listed across the top of the chart. Then trace down that column to the letters listed there. To the left of each letter is a brief description of one of the possible causes of the problem; to the right of the letter is a suggested action for correcting the problem.

Notice that the symptoms are grouped according to type: refrigeration cycle complaints are listed first, followed by defrost problems, electric heat problems, and economizer complaints.

The probable causes listed on the left-hand side of the chart are also grouped by type. Electrical malfunctions are listed first, followed by electric heat, economizer, refrigeration, compressor, and fan-related problem origins. Notice, too, that the items within each group of causes are arranged from most to least likely to occur.

As mentioned earlier, letters are used to key the symptoms, causes and recommended actions to one another. These letters represent the unit's modes of operation:

C = Mechanical Cooling Cycle
H = Mechanical Heating Cycle
E = Optional Electric Heat Cycle
O = Optional Economizer Cyicle
B = Both Mechanical Cooling and Heating Modes

For your reference, this legend is provided at the top of the chart. Along with the legend is a note indicating that the charts assume that the thermostat system selector and fan switches are positioned at AUTO.

If operating difficulties are encountered, be sure to make the following preliminary checks before referring to the troubleshooting chart:

[] Check the room thermostat to ensure that it is properly set and receiving control power.

[] Verify that the unit is receiving electrical supply power, and that the fuses are intact.

[] Check the filters; they should be positioned properly, and be free of dirt and debris.

After completing the checks listed above, be sure to inspect the unit for other obvious causes of trouble such as broken fan belts, a clogged coil, restricted air ducts, and the like. If everything appears to be in order--but the unit still fails to operate properly--refer to the appropriate section of the troubleshooting chart.

Note: The troubleshooting chart that follows is provided solely as a guide for determining the cause of mechanical failure or malfunction. When mechanical problems do occur, however, Trane recommends that trained service personnel be contacted to help ensure proper diagnosis and repair of the unit.

WARNING: OPEN AND LOCK UNIT DISCONNECT TO PREVENT INJURY OR DEATH FROM ELECTRICAL SHOCK OR CONTACT WITH MOVING PARTS.

LEGEND

C = MECHANICAL COOLING
H = MECHANICAL HEATING
E = OPTIONAL ELECTRIC HEAT
O = OPTIONAL ECONOMIZER
B = BOTH HEATING & COOLING (MECHANICAL)

* THERMOSTAT SYSTEM SELECTOR & FAN SWITCHES ARE POSITIONED AT "AUTO"

COMPLAINT/SYMPTOM*

PROBABLE CAUSE	Refrigeration Cycle: Unit Will Not Start	Compressor Off/Indoor Fan Off/Outdoor Fans(s) On	Compressor Off/Indoor Fan On/Outdoor Fan(s) On	Compressor Off/Indoor Fan On/Outdoor Fan(s) Off	Compressor On/Indoor Fan Off/Outdoor Fan(s) Off	Compressor On/Indoor Fan Off/Outdoor Fan(s) On	Compressor On/Indoor Fan On/Outdoor Fan(s) Off	Compressor Hums But Will Not Start	Compressor Runs, Then Cycles Off	Only One of Two Compressors Runs	Compressor Is Noisy	High Discharge Pressure	Low Discharge Pressure	High Suction Pressure	Low Suction Pressure	Unit Not Functioning In Proper Operating Mode	Unit Not Up To Capacity	Liquid Refrigerant Floodback	Outdoor Fan Motor Runs Slow	Defrost Cycle: Unit Will Not Defrost after 45-min. Inhibit Period Expires	Defrost Cycle Does Not Terminate After 5 Minutes	Erratic Defrost Operation	Electric Heat Cycle: Electric Heat Does Not Cycle Off	Electric Heat Functioning During Cooling Cycle	Electric Heat Does Not Cycle On And/Or Stage	Economizer Cycle: Unit Will Not Economize or Modulate	O/A Dampers Will Not Go To Minimum Position	RECOMMENDED ACTION
ELECTRICAL MALFUNCTIONS																													
Disconnect Open; Fuses Blown or Faulty	B							B																					Check for Grounded Circuits, Faulty Wiring, etc.
Unit Power Circuit Fuse(s) Blown	B							B																		E			Check for Grounded Circuits
Control Circuit Fuse(s) Blown	B																												
Control Power Transformers(s)	B																												Check for Grounded Circuits
Loose Connections; Faulty Wiring	B	B	B	B	B	B	B	B	B			B				B			B	H									Repair or Tighten as Necessary
Low Voltage Condition	B							B	B																				
Voltage Imbalance (Single-Phasing)								B	B																				Maximum Acceptable Voltage Imbalance Is 2%
Wrong or Defective Room Thermostat	B			B		B										B							E						Use SPHA Thermostats Only; Replace If Necessary
Faulty Compressor Contactor		B	B	B			B	B	B																				
Faulty Indoor Fan Contactor				B		B						H	C	H	C														
Faulty Reversing Valve/Cooling Relay																B				H									Check Operating Pressure; Replace As Necessary
Faulty Reversing Valve Solenoid(s)																B				H	H								Replace Reversing Valve Solenoid(s)
Faulty Low Ambient Cutout				B																									
Faulty Low-Temp. Heating Relay																													Do NOT Manually Reset w/o Checking Cause
Discharge Line High-Temp. Cutout Tripped				B					B																				
Faulty Defrost Circuit Control Board								B												H	H	H			E			
Faulty Defrost Relay								B				B								H	H	H						
Faulty Thermistor Sensor(s)								B												H	H	H						
ELECTRIC HEAT MALFUNCTIONS																							E		E				
Faulty Electric Heat Contactor(s)																							E	E	E				
Faulty Electric Heat Time Delay Relay(s)																													
ECONOMIZER MALFUNCTIONS																											O		
Enthalpy Control Failed/Faulty				O																							O	O	
Faulty Economizer Mixed Air Controller				CO																									
Faulty Economizer Comp. Lockout Thermostat													C		C												O	O	
Faulty Economizer Actuator																											O	O	
Economizer Damper Linkage Damaged/Binding																													
REFRIGERATION MALFUNCTIONS													B		B		B						H						Charge Only by Weight
Undercharge of Refrigerant												B	B		B		B												Re-Evacuate and Charge by Weight
Overcharge of Refrigerant													B	B	B	B	B		B	B									Use Only R-22
Wrong Type of Refrigerant in System												B	B		B		B												Evacuate and Weigh In Correct Charge
Noncondensibles in System												B																	Remove Compressor; Drain Oil; Recharge to Correct Oil Level
Oil Overcharge												B																	
Liquid Refrigerant Floodback												B																	Check Crankcase Heater(s) for Proper Operation
Liquid Refrigerant in Compressor(s) at Start-up												B																	Replace; Evacuate and Recharge by Weight
Plugged Filter Drier(s)													B		B		B												
Expansion Valve Faulty or Improperly Adjusted														B	B		B	B											Replace Power Element
Faulty Expansion Valve Sensing Bulb													B		B														
Expansion Valve Sensing Bulb Improperly Insulated or Installed													B		B					B									
Faulty Check Valve (Stuck Open/Closed or Leaking)																													
Plugged Circuits or Distributors														B		B		B											
Faulty Reversing Valve													B	B	B	B		B			H	H							Replace Reversing Valve
Unit Operating in Defrost Mode								B																E	E				Observe Normal Operation; See "Electrical Sequence of Operation"
COMPRESSOR MALFUNCTIONS				B						B																			Allow Time for Control to Reset
Compressor Internal Motor Protector(s) Open				B					B																				Replace Compressor
Compressor Motor Windings Open				B					B																				Replace Compressor
Compressor Mechanical Failure				B					B			B		B	B														Tighten Isolator to Proper Torque
Compressor Isolator(s) Loose												B																	
INDOOR/OUTDOOR FAN MALFUNCTIONS							B						H	C	H	C			C										Allow Motor to Cool; Check Continuity; Replace if Necessary
Indoor Fan Motor Failure							B						H	C	H	C			C										Correct Belt Tension; Replace if Necessary
Loose or Broken Fan Belt							B						H	C	H	C			C										Reverse Motor Power Leads
Indoor Fan Running Backwards													H	C	H	C			C										Check Filters; Clean Coil if Necessary
Indoor Airflow Low													H	C	H	C		B	C										Allow Motor to Cool; Check Continuity; Replace if Necessary
Outdoor Fan Motor(s) Failed								B					C	H	C	H			H										
Faulty Outdoor Fan Motor Capacitor(s)																			H	B									
Outdoor Fan(s) Running Backwards													C	H	C	H			H										Clean Coil if Necessary
Outdoor Airflow Low													C	H	C	H		B	H				H						

MODEL K SERIES AIR COMPRESSOR
(Model KU With Intake Valve Unloading Head)
Two Cylinder Single Stage Bore 2½", Stroke 2"

MODEL K, KU - 10 3/8" DIA. FLYWHEEL				
HP	PRESSURE (PSI)	RPM	C.F.M. DISPL.	1725 RPM Motor Pulley "A" Pitch
3/4	50	530	5.9	3.0
1	50	790	9.0	4.5
	125	560	6.4	3.2
	150	500	5.7	2.8
1 1/2	50	1150	13.1	6.7
	125	870	9.9	5.0
	150	860	9.8	5.0
2	125	1150	13.1	6.7
	150	1060	12.0	6.2

MODEL KC - 13 1/2" DIA. FLYWHEEL

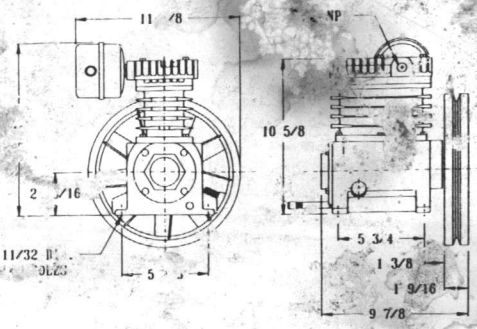

Shipping Carton [illegible] x 1[illegible]/2 x 12 (approx.

INSTALLATION AND STARTING

INSPECTION: Check for possible damage in transit and see that flywheel turns freely by hand. Flywheel run-out or wobble may be due to a flywheel cracked in handling. Report any damage to delivering carrier at once.

MOUNTING: Locate to provide the compressor intake and flywheel fan with cool, clean, dry air. Remove all shipping skids. Place the unit on a solid base with the flywheel at least 6 inches from a wall.

HORIZONTAL TANKS: Use one of the following: 1) Mount legs on properly selected vibration isolators (consult dealer for recommendations). 2) Mount and level the assembly using Emglo tank levelers. 3) Carefully shim legs to level and allow the assembly to stand free (not bolted to floor).

VERTICAL TANKS: Level the assembly and bolt the legs directly to the floor.

AIR PIPING: For maximum noise isolation, include a section of rubber or flex-metal hose between the tank and shop air system.

LUBRICATION: **Compressor is shipped without oil.** Before starting compressor, fill the crankcase to the upper or full oil level mark. Compressor must be reasonably level for proper lubrication.

Crankcase capacity. Approx. 1/2 Qt. (1/2 Liter)

For heavy duty operation, the use of Emglo Compressor Oil will provide superior lubrication and extend the life of your compressor. Emglo Compressor Oil is availabe from the factory or your local Emglo Distributor.

Emglo Compressor Oil:

Napthenic Base
N-100 for ambient temperatures above 32° (0°C)
N-68 for ambient temperatures below 32° (0°C)

For normal duty, including intermittent operation, a quality grade of non-detergent automotive oil will provide suitable lubrication:
SAE 30 for 55 to 120°F ambient.
SAE 20 for 32 to 55°F ambient.
SAE 10 for 0 to 32°F ambient.

Multi-viscosity oils are not recommended for compressors.

ROTATION: Facing the pulley side of pump, direction of rotation should be counter-clockwise (see arrow on pulley) for efficient cooling action.

OPERATION AND CARE

SPEED: Never operate pump at speeds in excess of those recommended by the factory. A safety valve must be installed in every pump or assembly.

Listen for any unusual noise, failure to unload, vibration or belt slippage and correct any of a serious nature can develop.

WEEKLY: Examine filter elements and if dirty, remove, tap filters on hard surface to remove dust. Replace if necessary.

Check oil level and if necessary add sufficient oil to bring level in base to the upper mark on oil gauge. Keep compressor clean for efficient operation.

MONTHLY: Check and tighten all bolts as required. Check air connections and joints for leaks — tighten if necessary.

EVERY THREE MONTHS: Drain and refill base with new oil. Continuously operating compressors in daily use and units subject to heavy duty should have oil changed monthly.

NOTE: TROUBLE SHOOTING GUIDE LOCATED ON BACK COVER

MODEL K & KU

TWO CYLINDER-SINGLE STAGE
2½" BORE x 2" STROKE

8/95

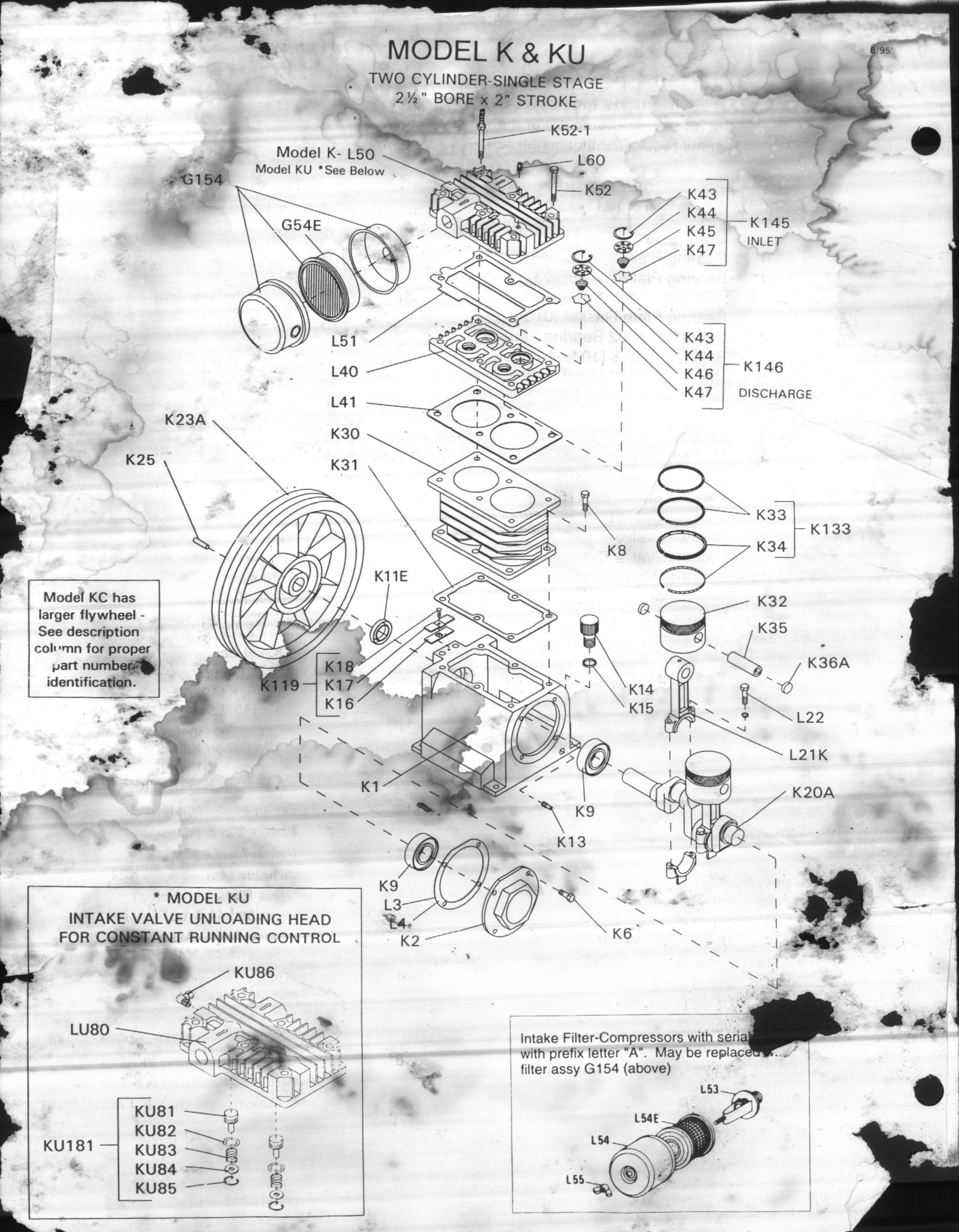

Model KC has larger flywheel - See description column for proper part number identification.

* MODEL KU
INTAKE VALVE UNLOADING HEAD
FOR CONSTANT RUNNING CONTROL

Intake Filter-Compressors with serial ... with prefix letter "A". May be replaced ... filter assy G154 (above)

PARTS LIST MODEL K & KU

Includes Model KC with larger diameter flywheel

When ordering parts, please give compressor model, serial number, and parts number. Order assemblies when possible. Quantity required indicates pieces required fo a complete pump repair.

PART NO.	QTY. REQ'D.	DESCRIPTION (Torque specs)
K1	1	Crankcase
K2	1	Bearing Plate
L3	1	Bearing Plate Gasket .031
L4	1	Bearing Plate Gasket .016
K6	4	Use **#120-1002** Bearing Plate Bolt 1/4-20x5/8 [10 ft.-lb]
K8	6	Use **#120-1017** Crankcase Bolt 5/16-18x3/4 [15 ft.-lb]
K9	2	Main Bearing
K11E	1	Oil Seal 1 1/2"
K13	1	Use **#122-1045** Oil Drain Plug 1/4 NPT
K14	1	Fill Cap (Includes K15)
K15	1	Fill Cap Gasket
K16	1	Breather Valve
K17	1	Breather Valve Retainer
K18	1	Breather Valve Stud
K20A	1	Crankshaft
L21K	2	Connecting Rod (Includes L22)
L22	4	Rod Bolt w/Lock Washer 1/4-20 x 1 1/4 [10 ft.-lb]
K23A	1	10 3/8" Flywheel (Includes K25) (s/n "B")
*K23	1	10" Flywheel (Includes K25) (s/n "A")
+EQ23	1	13 1/4" Flywheel (Model KC only, s/n "A")
+G23	1	13 1/2" Flywheel (Model KC only, s/n "B")
K25	1	Flywheel Key (spirol)
K30	1	Cylinder
K31	1	Cylinder Gasket
K32	2	Piston
K33	4	Compression Ring (chamfer on top side)
K34	2	Oil Ring with Expander
K35	2	Piston Pin
K36A	4	Pin Retainer
L40	1	Valve Plate
L41	1	Valve Plate Gasket
K43	4	Valve Retainer
K44	4	Valve Bumper
K45	2	Valve Spring Intake
K46	2	Valve Spring Discharge
K47	4	Valve Disc

PART NO.	QTY. REQ'D.	DESCRIPTION
L50	1	Head (Start-Stop Type)
L51	1	Head Gasket
K52	4	Head Bolt 5/16-18x2 1/4 [2ft.-lb]
K52-1	2	Stud Bolt 5/16 x 18 x 2 1/4 x 5/8
*L53	1	Filter Mount (Obsolete - use G154)
G54E	1	Filter Element Only
G54EP	1	Package of Four Filter Elements
*L54	1	Filter Cover (Obsolete – use G154)
*L54E	1	Filter Element
*L55	1	Filter Nut
L60	1	Use **#122-1044** 1/8
LU80	1	Head-Unloader Ty
KU81	2	Unloader Piston
KU82	2	"O" Ring
KU83	2	Unloader Spring
KU84	2	Unloa asher
KU85	2	Unloader Retainer
KU86	1	Use **#121-1032** 1/4 x 1/8 Tube Elbow

ASSEMBLIES

K100A	1	Gasket Set L3, L4, K31, L41, L51
K101	1	Basic Repair Kit-Model K includes K100A, K119, K133, (2) K145, (2) K146, L54E
K101G	1	Kit contains G54E Filter Element
KU101	1	Basic Repair Kit-Model KU same as K101 w/(2) KU
KU101G	1	Kit contains G54E Filter Element
K119	1	Breather Assembly
K132	2	Piston, Pin & Rings
K133	1	Piston Ring Set includes (4) K33 & (2) K34
L140	1	Valve Plate with Valves includes L41 & L51 Gaskets
K145	2	Suction Valve Assembly includes K47, K45, K44, K43
K146	2	Discharge Valve Assembly includes K47, K46, K44, K43
G154	1	Filter Assembly
LU180	1	Unloading Head LU80 w/Unloaders
KU181	2	Unloader Assembly includes KU81, KU82, K&83, KU84 & KU85
LO	1	Oil Level Sight Gauge, Factory Inst.

pumps with serial number starting with prefix letter "A", pumps manufactured after 5/92 have serial
prefix "B"
shown on drawing

URRENT PRICING MAY BE OBTAINED BY CONTACTING YOUR LOCAL EMGLO DISTRIBUTOR OR BY CALLING THE FACTORY.

AIR COMPRESSOR MAINTENANCE AND TROUBLE SHOOTING

A COMPRESSOR "NOT MAKING ENOUGH AIR"

1. Drain air tank and measure pump up time. Compare with proper time for compressor model (see factory guide). If time is O.K., compressor may be too small for application. Increasing operating pressure will exaggerate the problem.
2. Test for leaks in air lines, tank, and compressor fittings. Soap suds solution works well.
3. Clogged filter element — remove, clean or replace. Intake air must be free of contamination such as paint mist.
4. Hot air blows out of intake. Intake valves not seating. Remove and clean. Polish disc on fine emery cloth (#400). Replace worn parts. A complete valve plate assembly can be obtained as a factory exchange at low cost.
5. Check valve or discharge tubing clogged. Clean or replace.

B. EXCESSIVE OIL CONSUMPTION (More than 1 oz. oil consumed per hour of operation.)

1. Clogged air intake filter. Clean or replace.
2. Inferior or dirty oil — see recommendations in instructions.
4. Piston rings worn or sticking. Remove rings, clean grooves. Check ring wear by pushing ring into cylinder bore. New ring end gap is approximately .007 to .017 inches. (Operation is O.K. to .060.) Stagger ring gaps when installing.
5. Deep scratches on cylinder wall. Caused by lack of oil or dirt in oil. Hone (.015 max. on diameter) or replace.
6. Oil mist in the air. Some oil is always present. Clean accumulation in air lines and tank. Add air line filter or clean element.
7. Head or valve plate gasket leaking between cylinders. Remove head and check.
8. Crankcase breather not operating properly (Part #K16) — oil blowing out breather or crankcase bolts. Clean breather valve by blowing or washing away oil or dirt. Valve should move freely in retainer with about 1/16" travel. Replace if necessary.
9. Compressor with constant running control unloaded more than 60% of the time. Consider start-stop or dual control.

C. MILKY OIL IN RESERVOIR

1. Normal result of water mixing with oil in tank or possibly in crankcase. Change oil and/or drain tank. Move compressor air intake to lower humidity source or cooler area. Increase intake pipe one size for every 3 feet - keep short.
2. Water is a normal by-product when compressing moist air. A compressor does not "make water". Cooler & dryer intake air or use of aftercooler/dryer devices on discharge air will reduce "water".

F. NOISE, KNOCK OR VIBRATION

1. Assembly-vibrating. See mounting instruction.
2. Flywheel wobbles. Cracked flywheel or bent shaft. Replace.
3. Flywheel or pulley loose. Remove, apply locktite on shaft. Re-install with new key.
4. Loose or worn connecting rod or piston pin. Tighten or replace.
5. Pressure switch or magnetic starter chatter. Adjust switch for greater differential or replace.
6. Loose drive belt. Adjust tension on slotted platform.
7. Foreign matter (carbon, dirt, piece of gasket) on top of piston. Remove cylinder head and check. To increase head clearance, add crankcase gaskets . . . not head gaskets.

G. RUNS HOT (Head and discharge line normally are hot enough to burn if touched.)

1. Compressor operating in excess of rated discharge pressure. Reset pressure control.
2. Poor ventilation. Provide cooler location. Allow minimum 6" flywheel clearance.
3. Incorrect rotation. Check flywheel arrow. Reverse motor.
4. Discharge valve or head gasket leak. Remove and clean valve. Replace. (Head bolt 22/25 ft. lb torque)
5. Restriction in discharge line or checkvalve. Clean or replace.
6. Low oil. Check!!!

H. COMPRESSOR "SLOWDOWN" OR "FROZE UP"

1. Check that supply voltage matches motor, i.e., 115 volt supply with motor connected for 230 volts or 208 supply with 230 volt motor.
2. Measure actual voltage at the motor while the compressor is under load (starting up or at high pressure). If voltage is more than 10% below motor nameplate rating, relocate compressor closer to main switch panel and/or provide heavier wiring. Check with electric power company.
3. Vee belt slipping. Adjust tension by moving motor. Clean oil from belt.
4. Operating pressure set higher than design pressure. Reset control.
5. If flywheel cannot be turned by hand (drain tank to eliminate back pressure), check oil level. If "frozen condition exists after cooling down and adding oil, disassemble compressor and replace damaged components. After compressor "run in" period, freezing is caused by lack of adequate clean lubrication.
6. Gas Engine Driven Compressors: If engine stalls during acceleration, increase engine idle speed. On engines equipped with a clutch, maintain idle speed below clutch engagement speed, (approx. 1900 RPM).

Emglo Air Compressors
303 Industrial Park Road, Johnstown, PA 15904
814/269-1
FAX 814/269-

Copyright 1992 EMGLO AIR COMPRESSORS. Details subject to change without notice.

Bldg. M-107

OPERATION AND MAINTENANCE MANUAL

APPLIED INSTRUCTION BUILDING

MARINE CORPS BASE

CAMP LEJEUNE, NORTH CAROLINA

CONTRACT NO. N62470-84-C-4087

MECHANIAL CONTRACTOR

SNEEDEN, INC.

P. O. BOX 3548

WILMINGTON, NC 28406

TAB PLACEMENT HERE

DESCRIPTION:

Table of Contents

☐ **Tab page did not contain hand written information**

☒ **Tab page contained hand written information**
***Scanned as next image**

Confidential Records Management, Inc.
New Bern, NC
1-888-622-4425
9/08

TABLE OF CONTENTS

1. Local Representatives

2. Subcontractors

3. Sewage Lift Station

4. Plumbing Fixtures, H.W. Heater, Electric Water Coolers and Eye/Face Wash

5. Air Compressor and Air Dryer

6. Trouble Shooting and Maintenance

7. Rooftop Air Conditioning Unit, Make-up Air Unit, VAV Terminal Units, Unit Heaters, and Wall-fin Radiation

8. Circulating Pumps, Condensate Pumps, Heat Exchanger, Air Controls and Steam Flow Meter

9. Exhaust Fans

10. Cotnrols and Control Diagrams

TAB PLACEMENT HERE

DESCRIPTION:

None

☐ **Tab page did not contain hand written information**

☒ **Tab page contained hand written information**
***Scanned as next image**

Confidential Records Management, Inc.
New Bern, NC
1-888-622-4425
9/08

LOCAL REPRESENTATIVE

1.	Roof Top Untis, Air Handling Units, Unit Heaters, Coils and Radiation	The Trane Company 5214 Western Blvd. Raleigh, NC 27606 919-851-4131
2.	Plumbing Fixtures, Steam Meter, Hot Water Heater, and Electric Water Cooler	Noland Company P. O. Box 3069 Kinston, NC 28501 800-682-7736
3.	Pumps, Convertor, Steam Specialties and Sewage Lift Station	Heat Trnasfer Sales, Inc. 901-G Norwalk Street Greensboro, NC 27407 919-294-3838
4.	Pipe and Duct Insulaiton	Ellington Insulation Co., Inc. 2013 North Kerr Avenue Wilmington, NC 28405 919-291-7223
5.	Control System	Honeywell, Inc. P. O. Box 220487 Charlotte, NC 28222 704-364-4770
6.	Testing and Balancing of Air and Water System	T. A. Services, Inc. 539 Armour Circle, N.E. Atlanta, Georgia 30324
7.	Air Compressor and Air Dryer	Jones and Frank, Inc. 622 Maywood Avenue Raleigh, NC 919-832-3081
8.	Exhaust Fans and CO_2 Exhaust System	W. A. Wood & Associates 10835 Monroe Road Matthews, NC 704-847-5377

TAB PLACEMENT HERE

DESCRIPTION:

2. Subcontractors

☐ **Tab page did not contain hand written information**

☑ **Tab page contained hand written information**
***Scanned as next image**

Confidential Records Management, Inc.
New Bern, NC
1-888-622-4425
9/08

SUBCONTRACTORS

1. Control System	Honeywell, Inc. P. O. Box 220487 Charlotte, NC 28222 704-364-4770
2. Pipe and Duct Insulation	Ellington Insulation Co.,Inc. 2013 North Kerr Avenue Wilmington, NC 28405 919-291-7223
3. Testing and Balancing Air and Water	TAB Services, Inc. 539 Armour Circle, N.E. Atlanta, GA 30324 404-872-1864

TAB PLACEMENT HERE

DESCRIPTION:

3.

☐ Tab page did not contain hand written information

☒ Tab page contained hand written information
*Scanned as next image

Confidential Records Management, Inc.
New Bern, NC
1-888-622-4425
9/08

P.O. # 1566-5570

Project: Applie[illegible] Instruction

Peabody Barnes

This job includes the following Peabody Barnes Equipment.

Quantity of two (2) Model 4SE304 Submersible Pump 4.5 HP., 460 volt, 3 phase, 1150 RPM with 8.13 Dia., trimmed impeller rated for 200 GPM @ 19.5 Ft. TDH.

Quantity of two (2) Model BAF-4 Break Away Fitting, P/N 72638.

Quantity of one (1) Model H6D Aluminum Access Door, P/N 79273.

Quantity of two (2) Lifting Chain 4/0, P/N 39238 in 15 ft., lengths.

Quantity of four (4) Stainless Steel Guide Rails 15 ft., each,P/N 42536.

Quantity of one (1) Nema 4X Duplex Junction Box, P/N 76622.

Quantity of one (1) Cable Rack, P/N 59720.

Quantity of four (4) Mercury Level Controls,P/N 73612.

Quantity of one (1) Duplex Nema 3R Control Panel, P/N 65628 with;

64672 - Shileded Weatherproof Flashing Red Light.
64674 - Weatherproof Alarm Horn with Silence Switch.
75634 - Time Delay.

Quantity of one (1) Fused Disconnect in Nema 4X Enclosure.

4" Discharge Medium Head

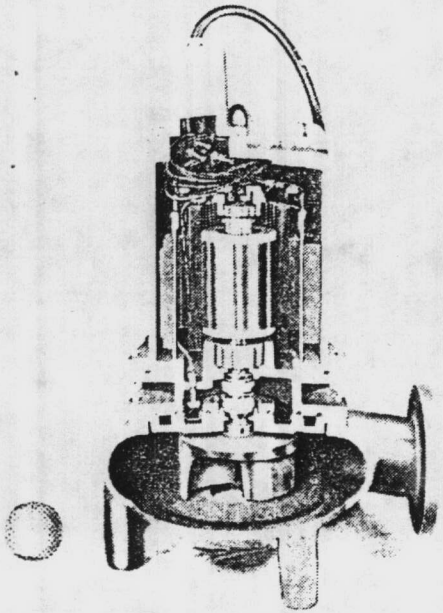

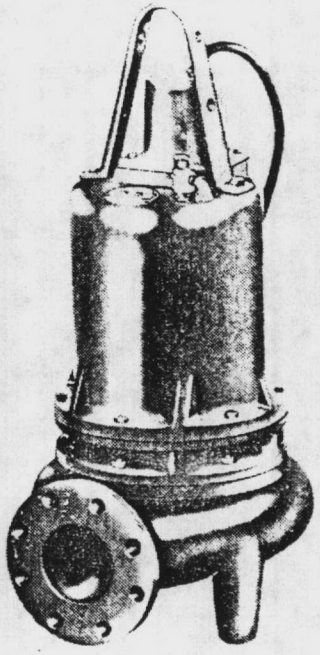

Models

4SE301
4SE302
4SE304
4SE502
4SE504
4SE752
4SE754

Size

4" Discharge

3" Spherical Solids Handling

NOTE: Pump can operate dry for extended periods without damage to motor and/or seals.

Pump Specifications

Size: 4" Discharge, 3½" Suction Opening
Impeller: 2 Vane, Cast Iron with Pressure Vanes on Back Side
Seal: Double Mechanical Type in Patented Oil-Filled, Pressure Equalized Chamber. Motor End of Seal, Ceramic and Carbon, Pump End of Seal, Carbon and Ceramic
Pump Body: Cast Iron
Motor Housing: Cast Iron
Hardware: 300 Series Stainless Steel
Suitable for: 160°F Liquids
Power Cord: 25' of 10/4 SO Cable
Standard Equipment: All Models Equipped with Legs and Lifting Bail, Moisture and Temperature Sensors

Optional Equipment: Additional Cable, Carbide Seal Faces,

Motor Specifications

Model **4SE301**:	4.5 HP, 200,230 Volt,	Single Phase
Model **4SE302**:	4.5 HP, 200,230 Volt,	Three Phase
Model **4SE304**:	4.5 HP, 460 Volt,	Three Phase
Model **4SE502**:	7.5 HP, 200,230 Volt,	Three Phase
Model **4SE504**:	7.5 HP, 460 Volt,	Three Phase
Model **4SE752**.	11.5 HP, 200,230 Volt,	Three Phase
Model **4SE754**.	11.3 HP, 460 Volt,	Three Phase

Single Phase: Completely Oil-Filled, Overload Protection provided in Control Box
Three Phase: Completely Oil-Filled, Overload Protection provided in Magnetic Starter
Motor Speed: 1150 RPM
Shaft: 416 Stainless Steel
Thrust Bearing: Ball
Radial Bearing: Ball

SECTION	4B
PAGE	82
ISSUED	9/85
SUPERSEDES	1/85

AMPERAGE				
200V			230V	
MAX. RUN AMPS	LOCKED ROTOR AMPS	MODEL NO.	MAX. RUN. AMPS	LOCKED ROTOR AMPS
25.3	67.8	4SE301	22.0	59.0
16.6	51.3	4SE302	14.4	59.0
---	---	4SE304	7.2	29.5
25.3	74.7	4SE502	22.0	86.0
---	---	4SE504	11.0	43.0
32.2	107.8	4SE752	28.0	124.0
---	---	4SE754	14.0	62.0

Models

4SE301
4SE302
4SE304
4SE502
4SE504
4SE752
4SE754

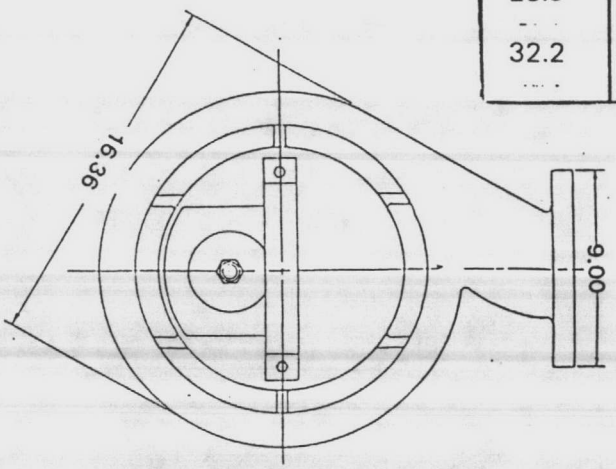

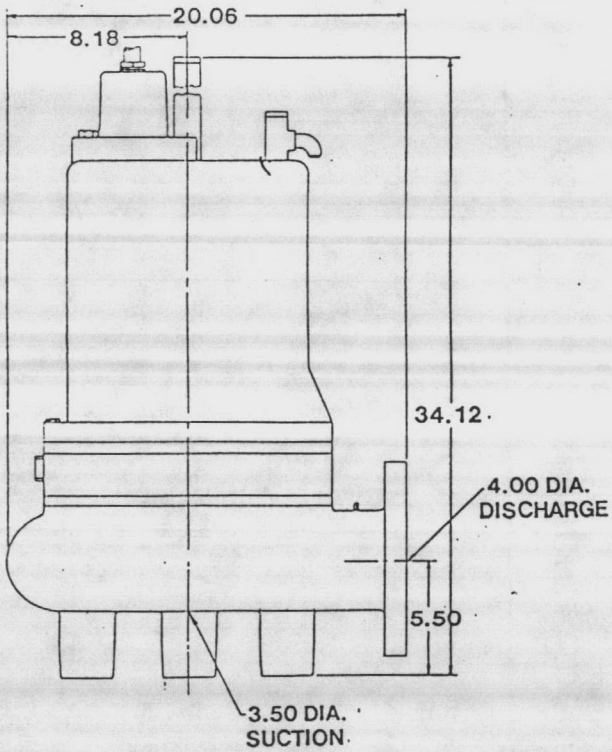

Submersible Wastewater Pump Association
SWPA
MEMBER

Peabody Barnes

651 North Main Street Mansfield Ohio 44902
Phone 419 522-1511

MADE IN THE U.S.A.

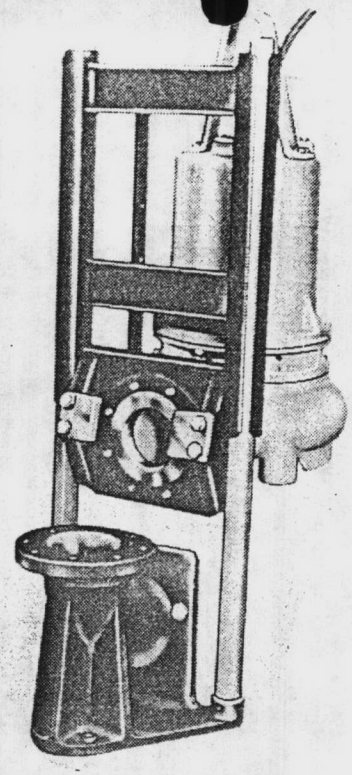

Models
"BAF 4"
"BAF 6"

Peabody Barnes

FEATURES

This coupling is designed to allow the submersible wastewater pump to be installed or removed without requiring personnel to enter the wet well.

1¼" Schedule 40 galvanized pipe should be used for guides on both the BAF 4 and BAF 6. An intermediate guide pipe bracket should be used for pipe lengths of 20' or more.

The stationary portion of the coupling consists of a specially designed base elbow which is bolted to the floor of the wet well. A stainless steel face on this elbow mates with a cast iron face on the moveable portion of the coupling. This metal to metal seal eliminates troublesome gaskets, and the dissimilar metals prevent corrosion which would cause the faces to stick.

The pump bolts to the moveable portion of the coupling and is then free to ride up and down the guide rails which are attached to the base elbow at one end and the underside of the wet well cover at the other end. The guide rails serve only to guide; they carry none of the pump weight.

SECTION	15
PAGE	48
ISSUED	10/85
SUPERSEDES	4/83

Specification Data

Model BAF 4

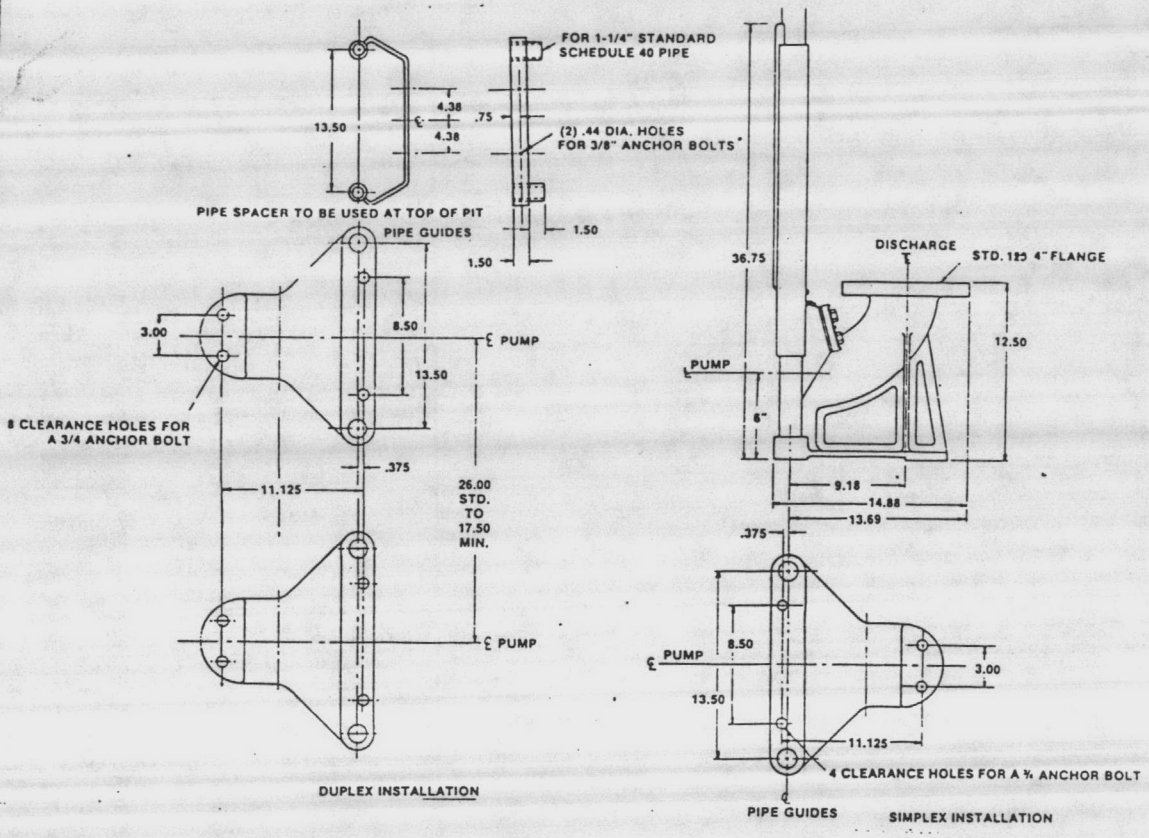

Model BAF 6

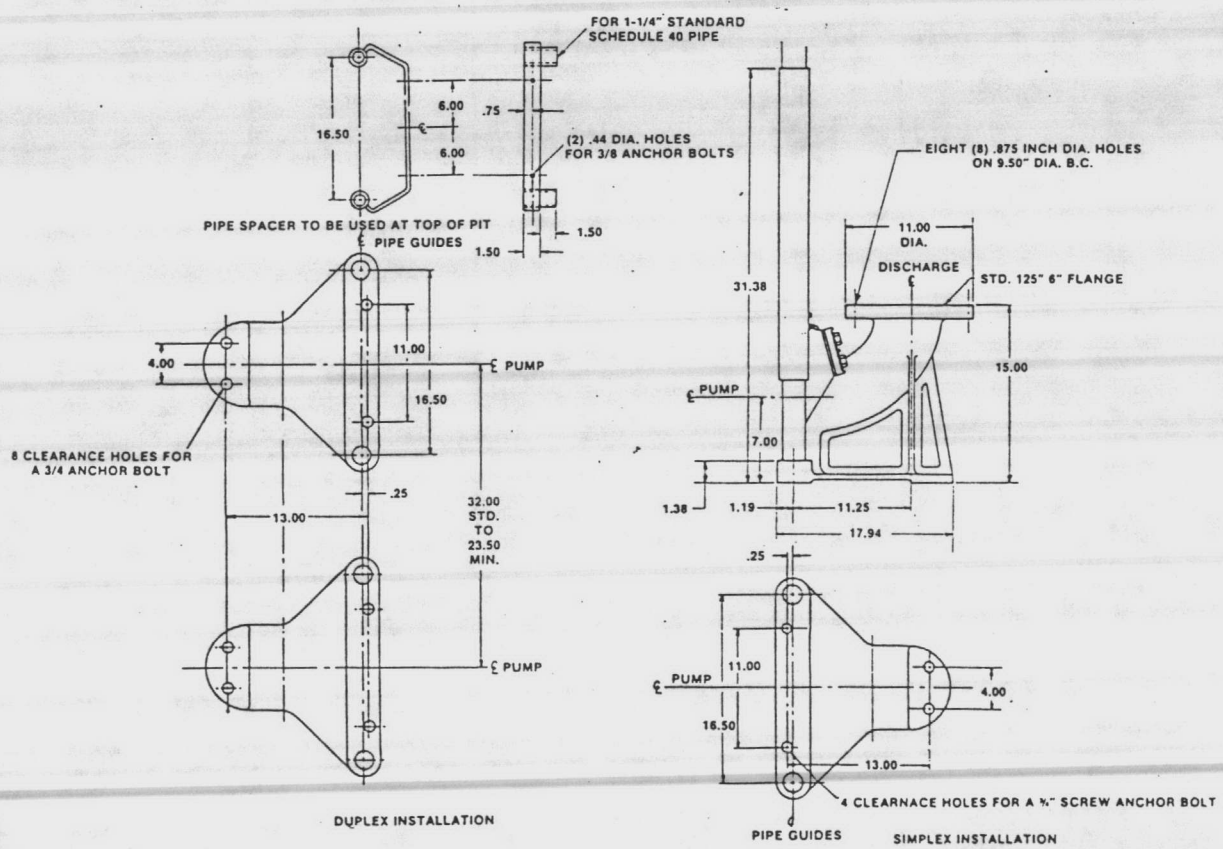

Peabody Barnes
651 North Main Street, Mansfield, Ohio 44902
Phone: 419/522-1511

MADE IN THE U.S.A.

Model
BAF 4

(Models 4SE301 Thru 4SEH1004)

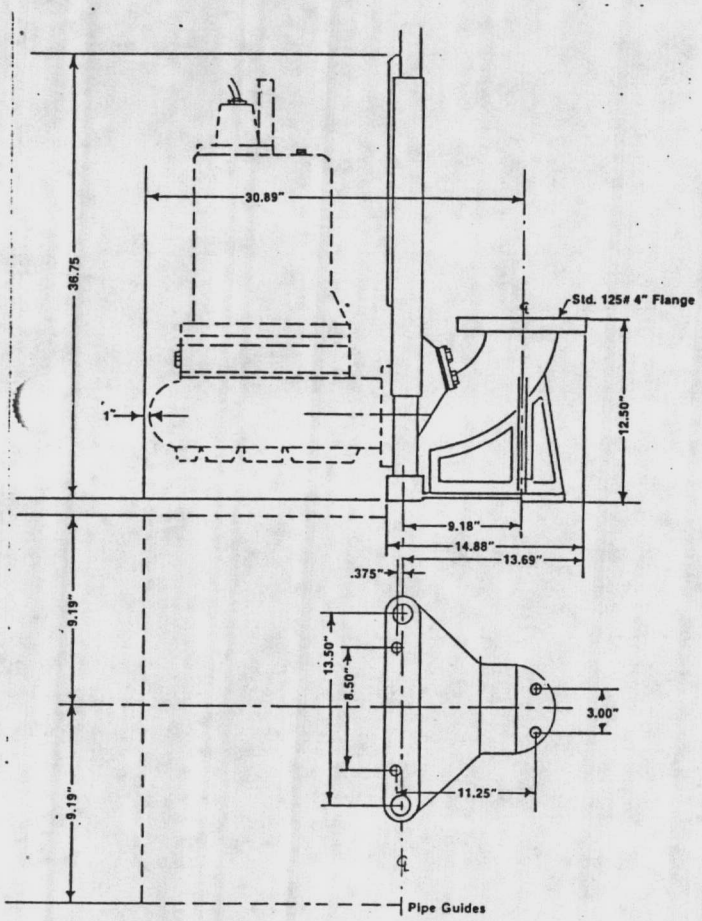

Model
BAF 6

(Models 6SE1002 Thru 6SEH4004)

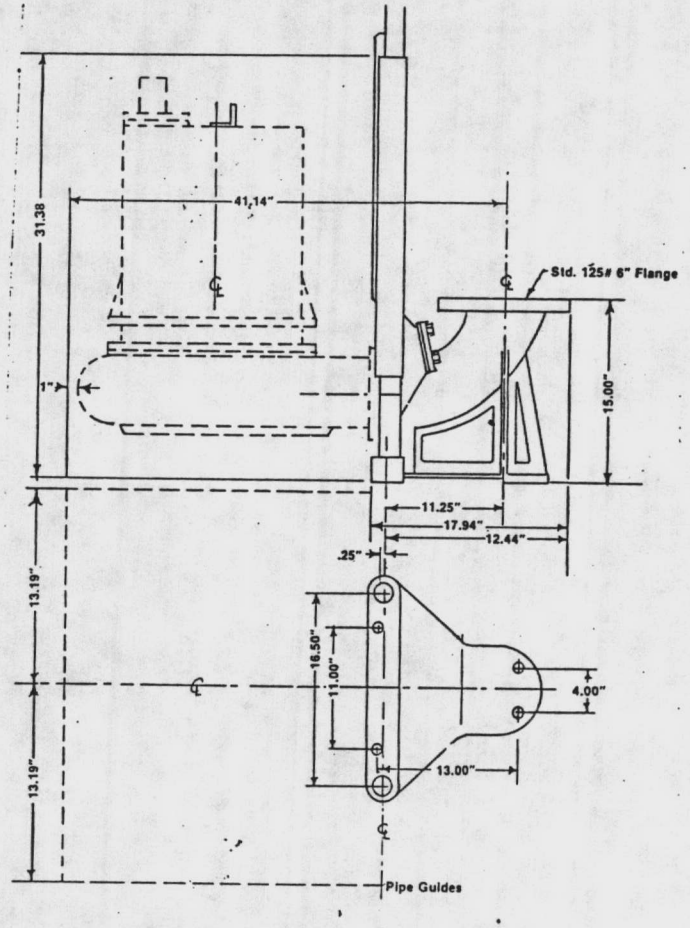

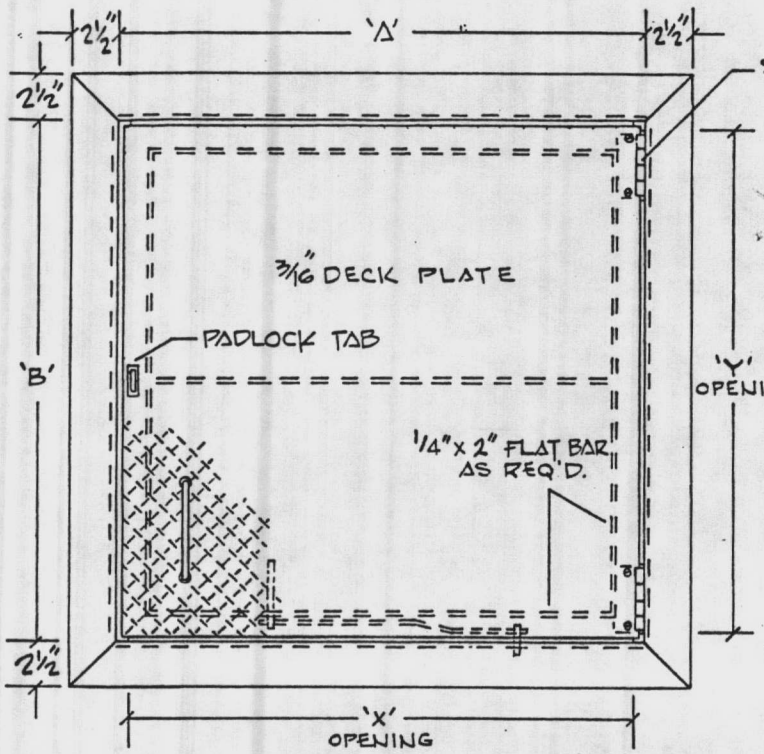

PLAN VIEW

NOMINAL SIZE	DIMENSIONS					
	A	B	X	Y	OVERALL	
30x30	31	31	30	30	36	36
30x48	31	49	30	48	36	54
36x36	37	37	36	36	42	42
36x48	37	49	36	48	42	54
36x60	37	61	36	60	42	66

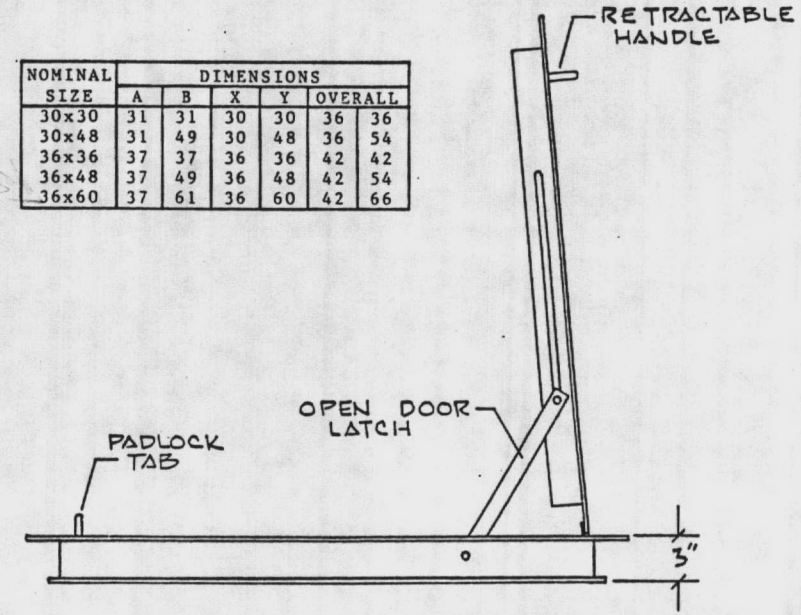

SIDE VIEW

NOTES:

1-MATERIAL TO BE 6061T6 ALUMINUM EXCEPT AS NOTED
2-LIVE WEIGHT RATING 150 LBS. PER SQ. FT.
3-ALL FRAME AND DOOR PARTS TO BE WELDED

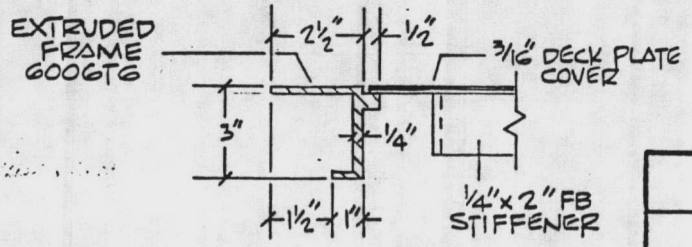

FRAME DETAIL

PROPRIETARY

ELECTRIC SPECIALTY, INC.-ORLANDO

SINGLE DOOR ACCESS COVER
ALUMINUM 150LB/SQ. FT. RATED

A 9/12/06 REV.	SCALE: NONE	DRAWN BY: JCP	DRAWING NUMBER: ES-1608
	DATE: 10/22/85	SHEET NO: 1 OF 1	

SECTION	15
PAGE	32
ISSUED	10/85
SUPERSEDES	2/85

Duplex Junction Box

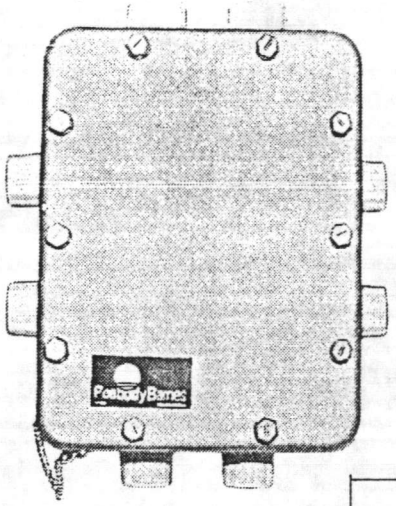

NEMA 4X watertight junction box for combining all pump and level control cables. The box is constructed of self-extinguishing molded fiberglass with a minimum wall thickness of 3/16-inch. The cover is screwed on with captive stainless steel fasteners and sealed with a neoprene gasket. Included are individual corrosion-resistant and liquid-tight cable connectors constructed of thermoplastic with neoprene bushing and sealing ring. The box and all connections are watertight and are capable of withstanding an external liquid pressure of 10 PSI. A 1½-inch PVC electrical conduit hub is provided on the back of the box.

Inside box size: 8" x 6" x 4⅜".

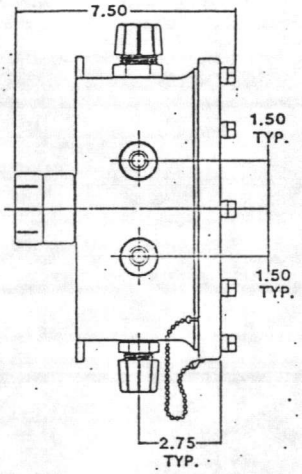

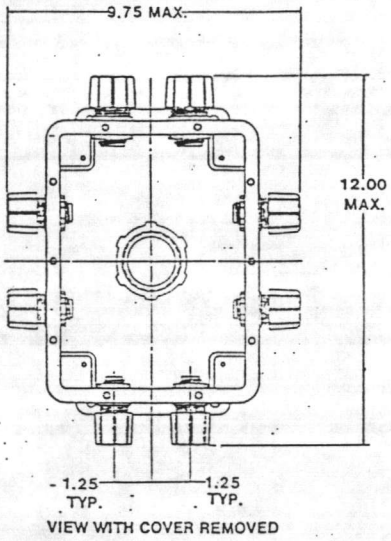

VIEW WITH COVER REMOVED

Part No.	Cable Connector Qty.	Cable Dia. Range	Hub Size	Type of Connection	MODELS WHERE USED: Box as Built	MODELS WHERE USED: *Using Extra Grommet & Nylon Washer Provided
76622	4	.250-.312	½"	Level Control Cordsd	3SE151DS-MS-	SGV200-754
	2	.375-.437	½"	Moisture/Temp.	204DS-MS,	
		.500-.562		Sensors Control Cords	4SEL101MS-104MS, 4SE151MS-204MS	
	2	.625-.750	¾"	Pump Power Cords	4SE301-754 4SEH301-304 4SEH502-754 SGV200MS-754MS	
76627	4	.250-.312	½"	Level Control Cords	3SE151-204	3SE55-56, 3SE73-74
	2	.625-.750	¾"	Pump Power Cords	3SEH101-206	3SE103-104
		.500-.625			4SE151-204, 3SE151DS-204DS, E202, 4SEL101-104	4SE55-56, 4SE73-74
76628	4	.250-.312	½"	Level Control Cords	4SEH501	
	2	.375-.437	½"	Moisture/Temp. Sensors Control Cords	4SEH1002, 4SEH1004	
	2	.750-.875	1"	Pump Power Cords		
78158	4	.250-.312	½"	Level Control Cords	3SE53-54, 3SE75,	
	2	.375-.437	½"	Pump Power Cords	3SE101, 4SE53-54, 4SE75, 4SE101	

Peabody Barnes

651 North Main Street, Mansfield, Ohio 44902

MADE IN THE U.S.A.

INSTALLATION INSTRUCTIONS FOR CABLE RACK

P/N 59720

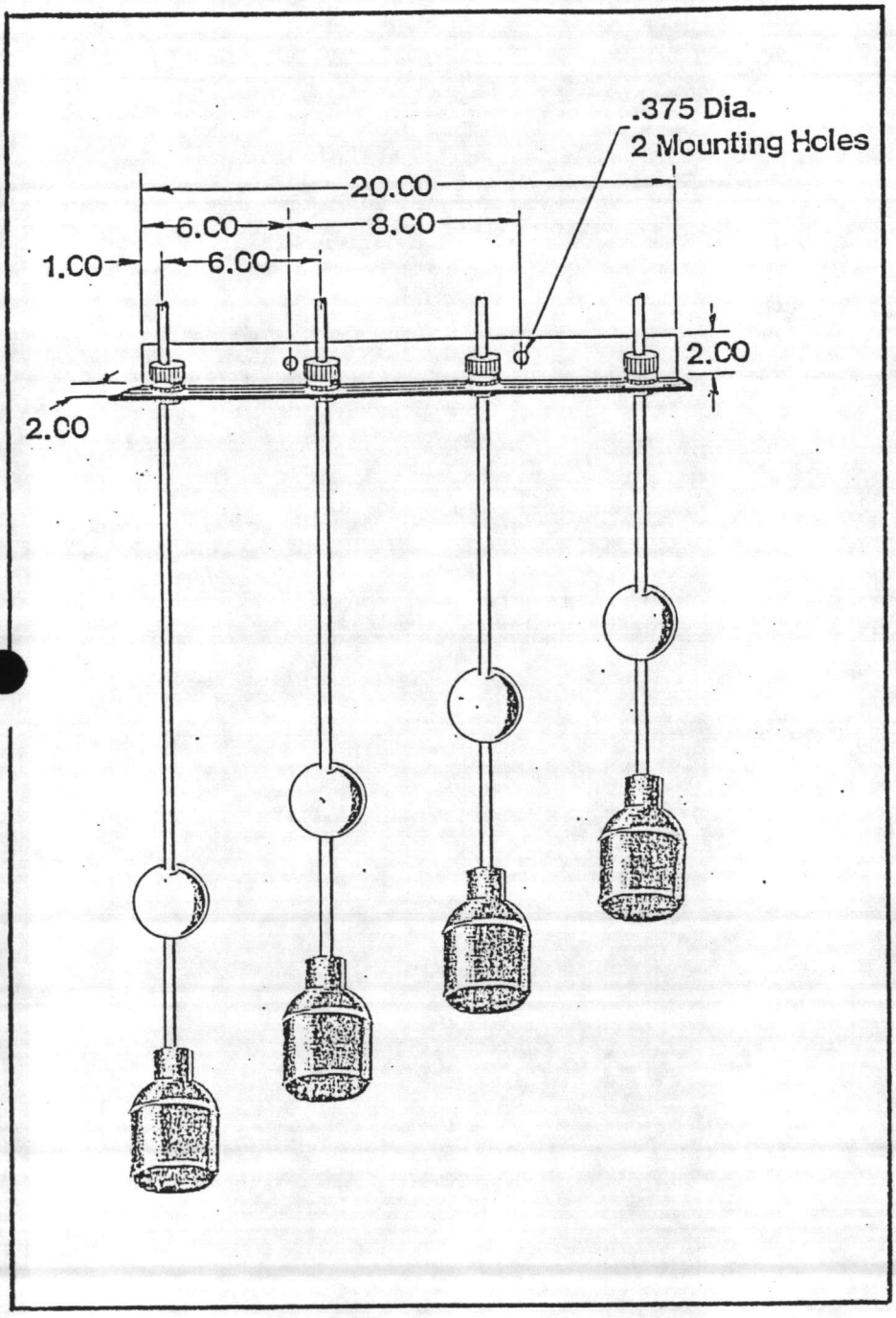

1. Install Cord Grips in Bracket.
2. Feed Cord through Cord Grip in Bracket and Cord Grip in Junction Box. Make all splices.
3. Fasten Bracket to Junction Box with (2) 5/16x7/8 screws in place of (2) 5/16x5/8 Cover Screws.
4. Set level by loosening Knurled Nut on Cord Grip in bracket, adjusting Float level
5. and retightening Cord Grip finger tight.

Peabody Barnes

MANSFIELD, OHIO
Form No. 59723-285

SECTION	15
PAGE	24
ISSUED	10/85
SUPERSEDES	12/84

73612 73614 73616
73613 73615 73617

TYPICAL INSTALLATION

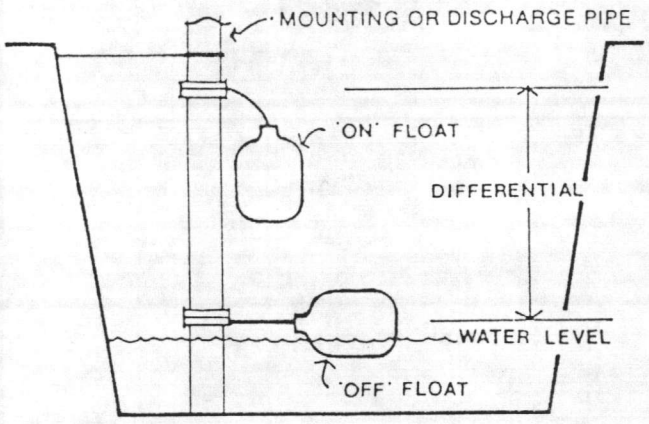

General Comments

1. Never work in the sump with the power on.
2. Attach the Level Controls to the mounting pipe or the pump discharge pipe. The 'off' float should be below the 'on' float in a 'pump out' application.
3. Arrange the Level Controls so they do not tangle or hang up.
4. In pipe mount installations, thread the cable strap through the buckle with the ratchet pawl; cinch up tightly; thread excess strapping through outer buckle slot.
5. Measuring the difference between mounting points gives the 'pump down' differential.

***Important Notes** — Mercury Level Controls are pilot duty devices. They cannot be used to directly power pump motors. Also, do not use Mercury Level Controls in gasoline or other combustibles.

Specifications

Cable	PVC 18-2 SJTOW-A, 41 Strand, 60°C
	DIAMETER .30
Float	Polypropylene
Clamp	Nylon, Stainless Steel
Certified	125V @ 120V.
Switch Rating	4.5A @ 120V.
	2.2A @ 230V.
Temperature Rating	60°C

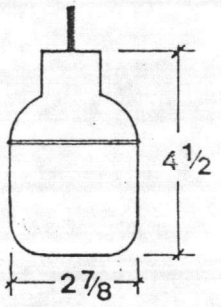

Float Dimensions

Typical Simplex Wiring Schematic

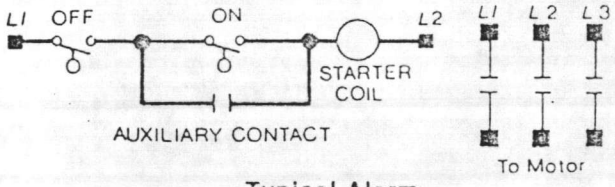

Typical Alarm Wiring Schematic

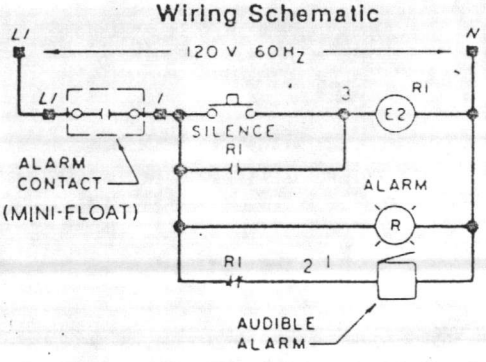

Peabody Barnes
651 North Main Street, Mansfield, Ohio 44902
Phone: 419/522-1511

MADE IN THE U.S.A.

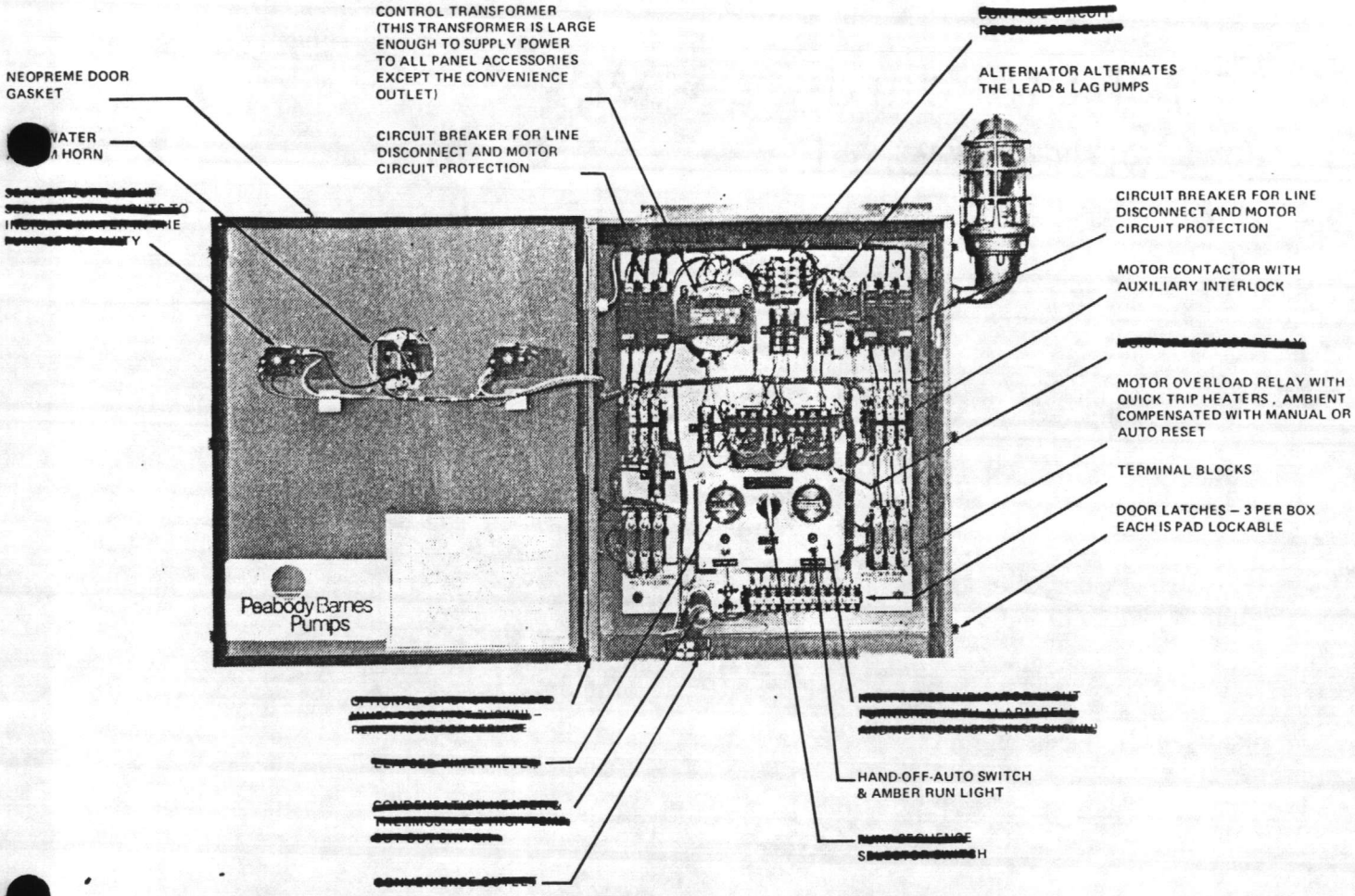

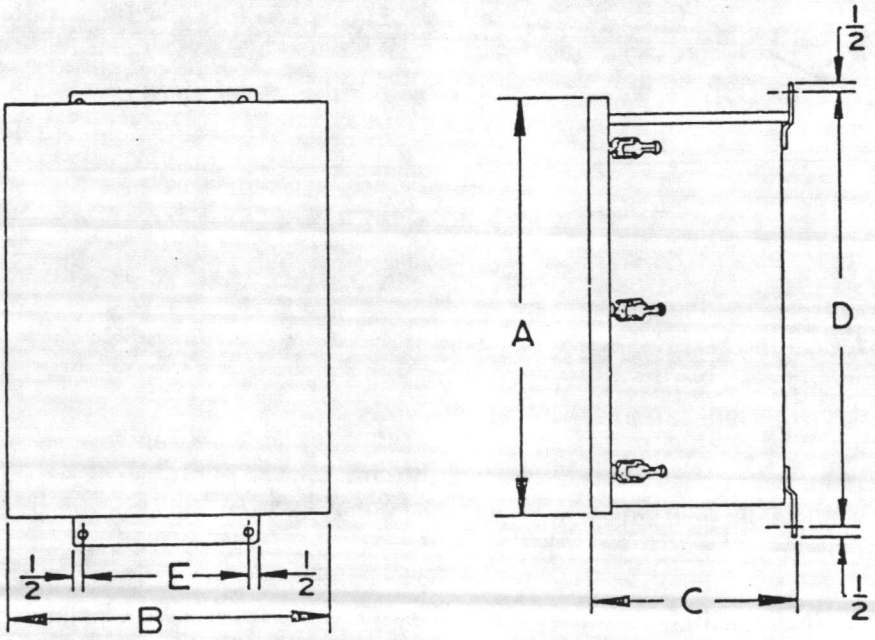

STYLE	A	B	C	D	E	MTG HOLES
SIMPLEX	16 13/16	12 1/2	6 1/8	17 1/4	8	9/32
DUPLEX	24 7/8	20 1/2	8 1/8	25 1/4	14	9/32

Peabody Barnes

Versatrol Standard Pump Control Panels

TYPICAL DUPLEX PANEL WITH OPTIONS

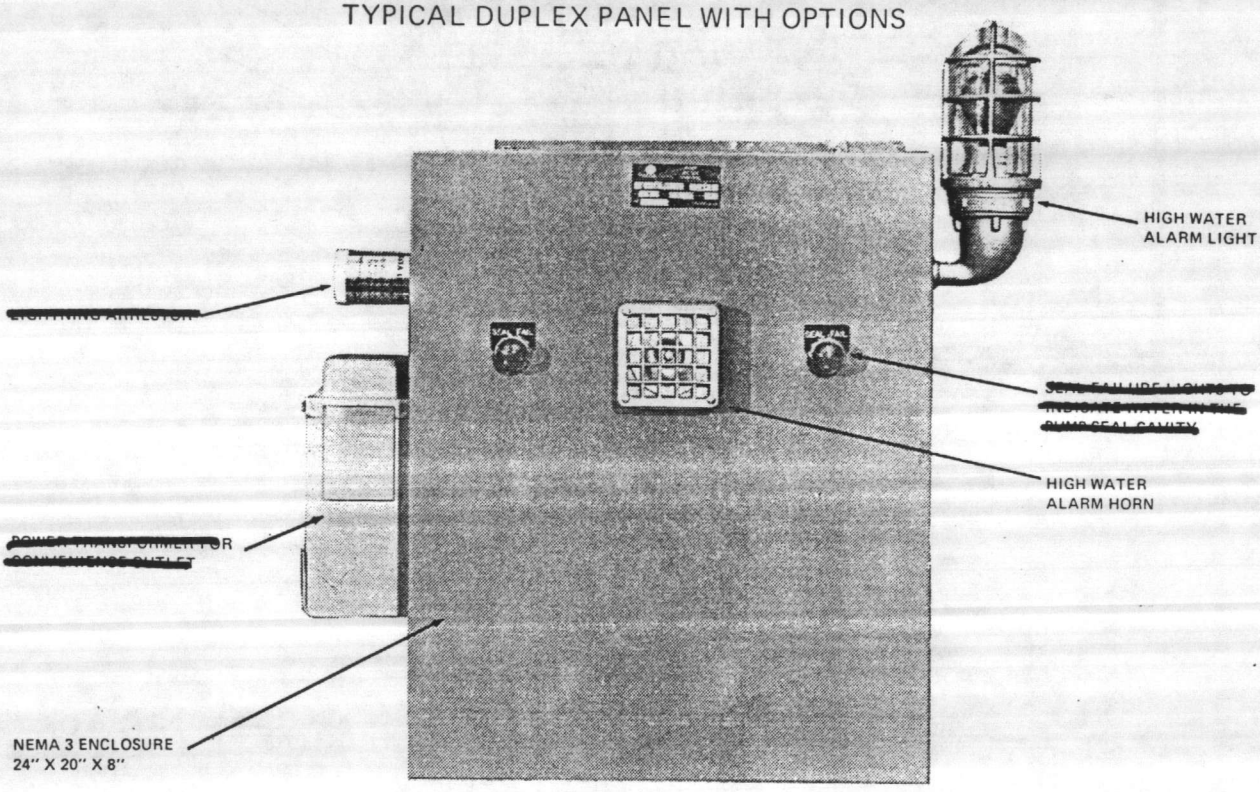

PEABODY BARNES VERSATROL STANDARD PUMP CONTROLS

Peabody Barnes pump controls provide both short circuit protection and overload protection in a Nema 3 enclosure. Each control includes —

- A circuit breaker sized for the application
- Tamper-proof door
- Run Lights
- Magnetic contactor for single phase, or magnetic starter with three ambient compensated quick-trip overloads for 3-phase
- Manual-Off-Automatic selector switch

All Components U/L Listed

Available in sizes for ½ HP — 10 HP

- 115 and 230 volt AC, 1-phase
- 230 and 460 volt AC, 3-phase

All models include transformer for 115 volt AC control circuits. All 230 volt panels are stamped "200/230 Volts" and may be used throughout this voltage range.

*NOTE: Three and five horsepower single phase panels are designed for use with Peabody Barnes special single phase models (SE-301, SEH-301, and SEH-501) ONLY and are not to be used in other applications.

DUPLEX PUMP CONTROL WIRING SCHEMATIC

1/2 THROUGH 60 HP 200/230/460 VOLT 3 Ø 50/60 HZ.

1 CONNECT PUMP LEADS TO OVERLOAD TERMINALS T1 - T2 - T3 CONNECT GREEN WIRE TO GROUND LUG
2 CONNECT STOP FLOAT FS1 TO TERMINALS 1 & 5
3 CONNECT START FLOAT FS2 TO TERMINALS 1 & 7
4 CONNECT START LAG FLOAT FS3 TO TERMINALS 34 & 35
5 CONNECT HIGH WATER ALARM FLOAT FS4 TO TERMINALS 11 & 12
6 CONNECT LINE TO C B TERMINALS L1 - L2 - L3

NOTE ALL FLOAT SWITCHES ARE TO BE INSTALLED BY THE CUSTOMER

FUSE CHART

F1	AMP
F2	AMP
F3	AMP
F4	AMP
F5	AMP
F6	AMP

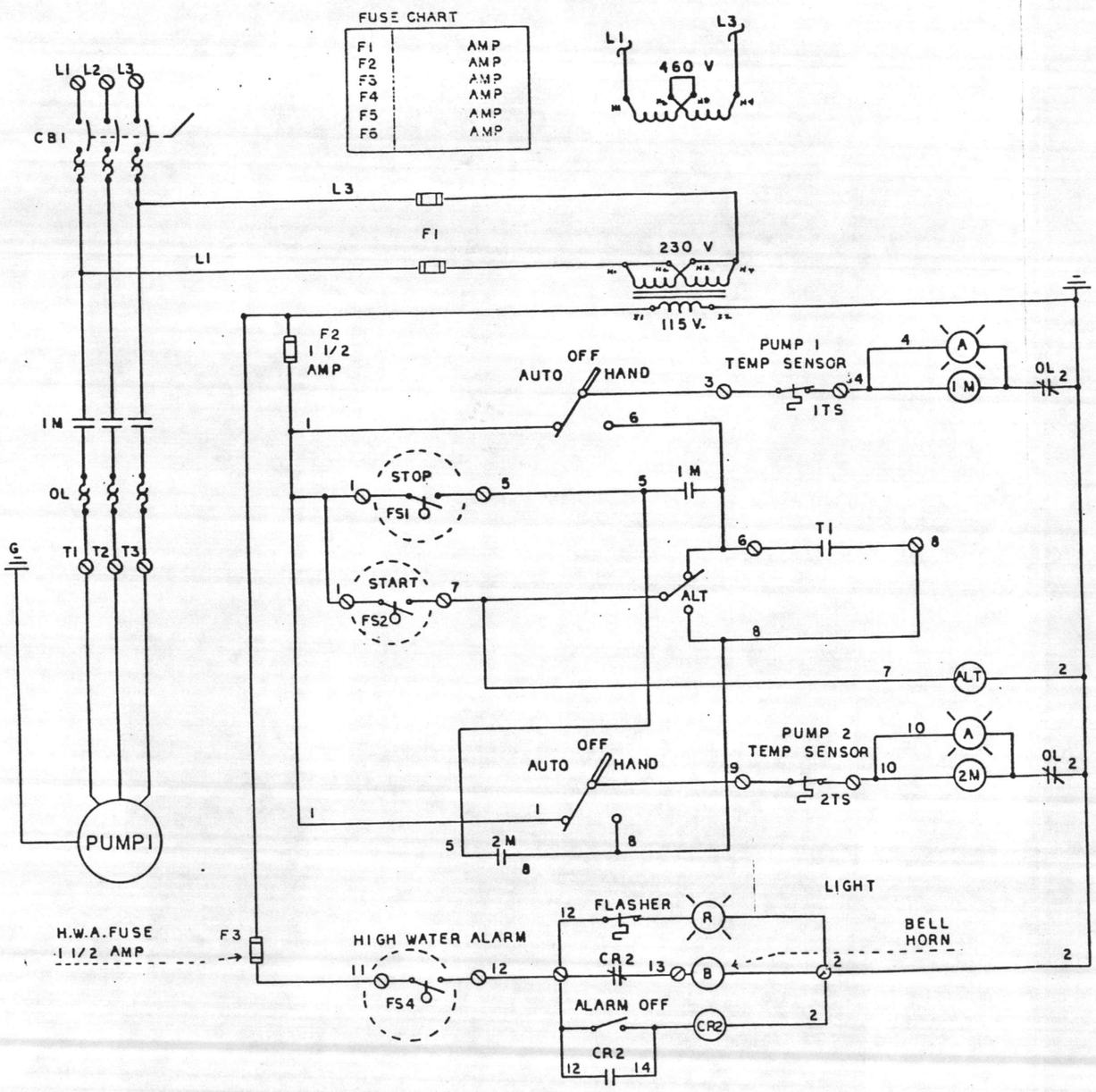

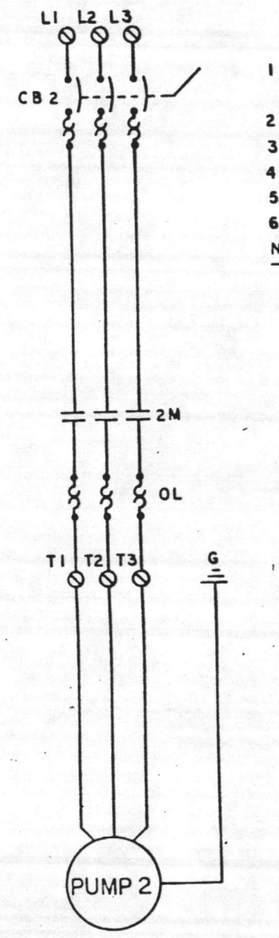

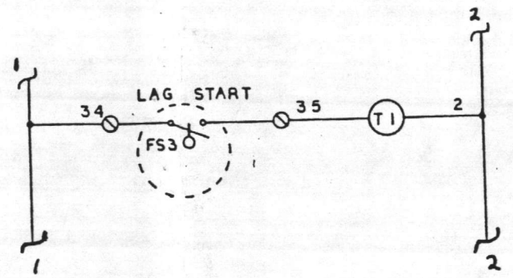

LAG START TIMER FS3 CONNECTS TO TERMINALS 34 & 35

CAUTION

CONNECT A GOOD EARTH GROUND TO CONTROL BOX

2112 B

PEABODY BARNES
MANSFIELD OHIO

OCT. 1983

VERSATROL STANDARD CONTROL PANEL

5 HP 460 VOLT 3 PHASE

NEMA 3R DUPLEX

P/N: 65628

SCHEMATIC: 2112B

QTY	DESCRIPTION
1	Hoffman Enclosure A24R208HCLO
1	Hoffman Backpanel A24P20
2	Furnas Contactor 42BE35AF
2	Furnas Overload 48DC38AA4
6	Furnas Heaters
2	Furnas Auxilary Interlocks 49D221251
1	Furnas Alternator 47AB10AF
1	Micron Transformer C150BTZ13 or V150BTZ13
2	G.E. Circuit Breaker TED134030WL
1	Underwriters Fuse Block 11425-1S
2	Buss Fuses BAF 1-1/2
2	McGill Hand-Off-Auto Switch 31910001
2	LeeCraft Run Light 32-1113
2	Sherman or Mercury Ground Lugs 508/D704
2	Connectron Terminal Block KT3
1	Connectron Terminal Block End KAD
1	Connectron Terminal Block Label MT 12-1/2
2	Anthoney Lee H-O-A Name Plate
1	Anthoney Lee Panel Name Plate
1	Alum.Sub Panel
1	NNC TIK-00060-461 Timer on lag start
1	Idec RH2BUAC120V Relay Alarm Off
1	McGill 31900001 Alarm Off Switch
1	Federal 350-120 with back box horn
1	Rab B100GG HWA Light & Red dot back box
1	G.E. TH3361SS Fused Disconnect 30 Amp 600V S.S.

NOTE: - Due to availibility, manufacturer and part number may change without notice.

Peabody Barnes

Spec-Setter™ Safety Switches Heavy Duty Type TH

30-1200 Amperes
480 and 600 Volts ac,
600 Volts dc

Schematic Diagram	Max. Ampere Rating	Indoor, Type 1① Cat. No.	Indoor, Type 1① List Price, GO-131	Outdoor, Type 3R② Cat. No.	Outdoor, Type 3R② List Price, GO-131	Water- & Dust-tight Types 4 & 4X Stainless Steel Cat. No.	Water- & Dust-tight Types 4 & 4X Stainless Steel List Price, GO-131	Drip- & Dust-tight Type 12 & JIC Without Knockouts Cat. No.	Drip- & Dust-tight Type 12 & JIC Without Knockouts List Price, GO-131	Horsepower Ratings ac NEC Std 480V 3-ph	ac NEC Std 600V 3-ph	ac Time Delay 480V 3-ph	ac Time Delay 600V 3-ph	dc 125 Volts	dc 250 Volts	dc 600 Volts
600 Volts—Fusible																
Two-pole, 600 Volts dc																
	30	TH2261DC	$ 179.00	TH2261RDC	$ 303.00	TH2261SSDC	$ 765.00	TH2261JDC	$ 256.00							15
	60	TH2262DC	218.00	TH2262RDC	355.00	TH2262SSDC	859.00	TH2262JDC	267.00							25
	100	TH2263DC	400.00	TH2263RDC	554.00	TH2263SSDC	1684.00	TH2263JDC	442.00							25
Three-pole, 480, 480Y/277④ and 600 Volts ac—250 Volts dc																
	30	TH3361■	179.00	TH3361R■	303.00	TH3361SS□	802.00	TH3361J⊡	295.00	5	7½	15	20		5	
	60	TH3362■	218.00	TH3362R■	355.00	TH3362SS□	884.00	TH3362J⊡	303.00	15	15	30	50		10	
	100	TH3363■	400.00	TH3363R■	554.00	TH3363SS	1760.00	TH3363J□	466.00	25	30	60	75		20	
	200	TH3364■	578.00	TH3364R■	765.00	TH3364SS	2465.00	TH3364J□	749.00	50	60	125	150		40	
	400	TH3365■	1502.00	TH3365R⊡	1789.00	TH3365SS	4805.00	TH3365J□	1653.00	100	125	250	350		50	
	600	TH3366□	2527.00	TH3366R□	3530.00	TH3366SS	6835.00	TH3366J	2784.00	150	200	400	500		50	
	800③	TC72367□	4400.00	TC72367R③□	5450.00											
	1200③	TC72368□	5780.00	TC72368R③□	7080.00											
Four-pole, 480 and 600 Volts ac⑧										2-ph	2-ph	2-ph	2-ph			
	30	TH6661	1208.00	TH6661	1208.00			TH6661	1208.00	7½	10	20	25		5	
	60	TH6662	1446.00	TH6662	1446.00			TH6662	1446.00	15	20	40	50		10	
	100	TH6663	1760.00	TH6663	1760.00			TH6663	1760.00	25	30	50	50		20	
	200	TH6664	3958.00	TH6664	3958.00			TH6664	3958.00	50	50				40	
600 Volts—No Fuse																
Two-pole, 600 Volts dc										240V 1-ph	240V 3-ph	480V 3-ph	600V 3-ph			
	30	THN2261DC□	93.00	THN2261RDC	169.00	THN2261SSDC	618.00	THN2261JDC□	166.00							15
	60	THN2262DC	171.00	THN2262RDC	295.00	THN2262SSDC	744.00	THN2262JDC	189.00							25
	100	THN2263DC	267.00	THN2263RDC	412.00	THN2263SSDC	1619.00	THN2263JDC	301.00							25
Three-pole, 480 and 600 Volts ac—250 Volts dc or Two-pole with Switching Neutral																
	30	THN3321⑥■	89.50							3	10			3	5	
	30	THN3361■	93.00	THN3361R■	169.00	THN3361SS⊡	675.00	THN3361J■	207.00	3	10	20	30	3	5	
	60	THN3362■	170.00	THN3362R■	295.00	THN3362SS□	802.00	THN3362J⊡	255.00	10	20	50	60	5	10	
	100	THN3363■	267.00	THN3363R■	412.00	THN3363SS□	1637.00	THN3363J⊡	367.00	20	40	75	100		20	
	200	THN3364■	407.00	THN3364R■	500.00	THN3364SS□	2234.00	THN3364J⊡	489.00	30	60	125	150		40	
	400	THN3365⊡	910.00	THN3365R⊡	1244.00	THN3365SS□	4482.00	THN3365J	1260.00		125	250	350		50	
	600	THN3366□	1619.00	THN3366R	2490.00	THN3366SS	6015.00	THN3366J	2028.00		200	400	500		50	
	800③	TC36367□	3300.00	⑦												
	1200③	TC36368	4430.00	⑦												
Four-pole, 480 and 600 Volts ac⑧											2-ph	2-ph	2-ph			
	30	THN6661□	1072.00	THN6661□	1072.00			THN6661□	1072.00		10	20	25		5	
	60	THN6662□	1240.00	THN6662□	1240.00			THN6662□	1240.00		20	40	50		10	
	100	THN6663□	1530.00	THN6663□	1530.00			THN6663□	1530.00		30	50	50		20	
	200	THN6664□	3439.00	THN6664□	3439.00			THN6664□	3439.00		50				40	

■ = Service Class 1
⊡ = Service Class 2
□ = Service Class 3

① 200-600 amp devices available factory reversed for bottom feed. Add "B" suffix to Cat. No. (e.g., TH3365B). **List price adder $21.00, GO-131.** UL Listed.

② 30-200 amp devices have removable closing cap. Larger ampere devices require field cut openings. Order hubs separately, see page 12.

③ Type TH electrical performance does not apply to Type TC switches. Class "L" fuses are ac only.

④ Order neutral kits from pages 10 and 11.

⑤ Not UL Listed.

⑥ 250 volts ac or 250 volts dc only. Compact enclosure.

⑦ Use molded case switch in circuit breaker enclosure.

⑧ Use four poles of six-pole switch.

References:

Accessories and Lug Sizes ..... Pages 10-12
Descriptive Bulletin GEA-10675
Dimensions and Knockouts ..... Pages 13-16
Replacement Parts Bulletin GEF-4452

Safety Switches Dimensions

TH
Type 4 & 4X, 12 and Mill Duty Enclosures

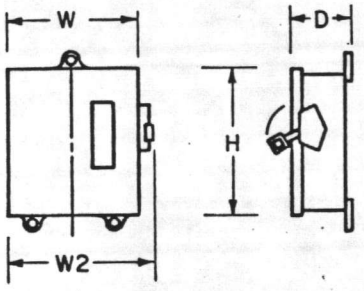

Fig. 1.

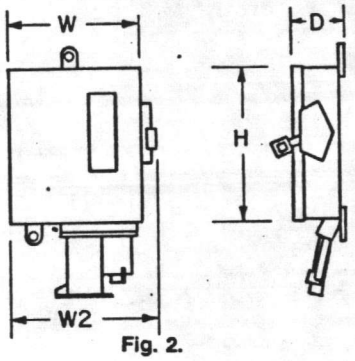

Fig. 2.

Approximate Dimensions In inches

Switch Cat. No.	W	H	D	W2
TH, Type 4 & 4X — Figure 1				
TH2221SS	7⅜	11⅜	5 1/16	8⅛
TH2222SS	9⅜	19⅜	5 1/16	10¼
TH2261SSDC	9⅜	13⅜	5 5/16	10¼
TH2262SSDC	9⅜	19⅜	5 5/16	10¼
TH2263SSDC	13½	25⅜	5 5/16	14¼
TH3221SS	7⅜	11⅜	5 1/16	8⅛
TH3222SS	9⅜	19⅜	5 1/16	10¼
TH3223SS	13½	25⅜	5 1/16	14¼
TH3224SS	14½	35⅛	5 5/16	15¼
TH3225SS	24⅝	59 9/16	8⅜	25¾
TH3226SS	24⅝	59 9/16	8⅜	25¾
TH3321SS	7⅜	11⅜	5 5/16	8⅛
TH3322SS	9⅜	19⅜	5 5/16	10¼
TH3361SS	9⅜	13⅜	5 5/16	10¼
TH3362SS	9⅜	19⅜	5 5/16	10¼
TH3363SS	13½	25⅜	5 5/16	14¼
TH3364SS	14½	35⅛	5 5/16	15¼
TH3365SS	24⅝	59 9/16	8⅜	25¾
TH3366SS	24⅝	59 9/16	8⅜	25¾
TH4321SS	7⅜	11⅜	5 1/16	8⅛
TH4322SS	9⅜	19⅜	5 1/16	10¼
TH4323SS	13½	25⅜	5 1/16	14¼
TH4324SS	13½	35⅛	5 5/16	15¼
TH4325SS	24⅝	59 9/16	8⅜	25¾
TH4326SS	24⅝	59 9/16	8⅜	25¾
THN2261SSDC	9⅜	13⅜	5 1/16	10¼
THN2262SSDC	9⅜	19⅜	5 1/16	10¼
THN2263SSDC	13½	25⅜	5 5/16	14¼
THN3361SS	9⅜	13⅜	5 1/16	10¼
THN3362SS	9⅜	19⅜	5 1/16	10¼
THN3363SS	13½	25⅜	5 5/16	14¼
THN3364SS	14½	35⅛	5 5/16	15¼
THN3365SS	24⅝	59 9/16	8⅜	25¾
THN3366SS	24⅝	59 9/16	8⅜	25¾
TH, Type 12 — Figure 1				
TH2221J	7⅜	11⅜	5 1/16	8⅛
TH2222J	9⅜	19⅜	5 1/16	10¼
TH2261JDC	9⅜	13⅜	5 5/16	10¼
TH2262JDC	9⅜	19⅜	5 5/16	10¼
TH2263JDC	13½	25⅜	5 5/16	14¼
TH3221J	7⅜	11⅜	5 1/16	8⅛
TH3222J	9⅜	19⅜	5 1/16	10¼
TH3223J	13½	25⅜	5 1/16	14¼
TH3224J	14½	35⅛	5 5/16	15¼
TH3225J	24⅝	59 9/16	8⅜	25¾
TH3226J	24⅝	59 9/16	8⅜	25¾
TH3321J	7⅜	11⅜	5 5/16	8⅛
TH3322J	9⅜	19⅜	5 5/16	10¼
TH3361J	9⅜	13⅜	5 5/16	10¼
TH3362J	9⅜	19⅜	5 5/16	10¼
TH3363J	13½	25⅜	5 5/16	14¼
TH3364J	14½	35⅛	5 5/16	15¼
TH3365J	24⅝	59 9/16	8⅜	25¾
TH3366J	24⅝	59 9/16	8⅜	25¾
TH4321J	7⅜	11⅜	5 1/16	8⅛
TH4322J	9⅜	19⅜	5 1/16	10¼
TH4323J	13½	25⅜	5 1/16	14¼
TH4324J	14½	35⅛	5 5/16	15¼
TH4325J	24⅝	59 9/16	8⅜	25¾
TH4326J	24⅝	59 9/16	8⅜	25¾
THN2261JDC	9⅜	13⅜	5 1/16	10¼
THN2262JDC	9⅜	19⅜	5 1/16	10¼
THN2263JDC	13½	25⅜	5 5/16	14¼
THN3361J	9⅜	13⅜	5 1/16	10¼
THN3362J	9⅜	19⅜	5 1/16	10¼
THN3363J	13½	25⅜	5 5/16	14¼
THN3364J	14½	35⅛	5 5/16	15¼
THN3365J	24⅝	48 1/16	8⅜	25¾
THN3366J	24⅝	48 1/16	8⅜	25¾

Approximate Dimensions In inches

Switch Cat. No.	W	H	D	W2
TH, Type Mill Duty — Figure 1				
TH2221M, MSS	7⅜	11⅜	5 1/16	9¼
TH2222M, MSS	9⅜	19⅜	5 1/16	11¼
TH2223M, MSS	13½	25⅜	5 1/16	15¼
TH2224M, MSS	14½	35⅛	5 5/16	16¼
TH2261MDC, MSSDC	9⅜	19⅜	5 1/16	11¼
TH2262MDC, MSSDC	9⅜	19⅜	5 1/16	11¼
TH2263MDC, MSSDC	13½	25⅜	5 5/16	15¼
TH3321M, MSS	7⅜	11⅜	5 1/16	9¼
TH3322M, MSS	9⅜	19⅜	5 1/16	11¼
TH3323M, MSS	13½	25⅜	5 1/16	15¼
TH3324M, MSS	14½	35⅛	5 5/16	16¼
TH3325M, MSS	24⅝	59 9/16	8⅜	26¾
TH3326M, MSS	24⅝	59 9/16	8⅜	26¾
TH3361M, MSS	9⅜	19⅜	5 1/16	11¼
TH3362M, MSS	9⅜	19⅜	5 1/16	11¼
TH3363M, MSS	13½	25⅜	5 1/16	15¼
TH3364M, MSS	14½	35⅛	5 5/16	16¼
TH3365M, MSS	24⅝	59 9/16	8⅜	26¾
TH3366M, MSS	24⅝	59 9/16	8⅜	26¾
THN2261MDC, MSSDC	9⅜	19⅜	5 1/16	11¼
THN2262MDC, MSSDC	9⅜	19⅜	5 1/16	11¼
THN2263MDC, MSSDC	13½	25⅜	5 5/16	15¼
THN3361M, MSS	9⅜	19⅜	5 1/16	11¼
THN3362M, MSS	9⅜	19⅜	5 1/16	11¼
THN3363M, MSS	13½	25⅜	5 1/16	15¼
THN3364M, MSS	14½	35⅛	5 5/16	16¼
THN3365M	24⅝	48 1/16	8⅜	26¾
THN3365MSS	24⅝	59 9/16	8⅜	26¾
THN3366M	24⅝	48 1/16	8⅜	26¾
THN3366MSS	24⅝	59 9/16	8⅜	26¾
TH, Copper Lug — Figure 1				
TH3361JCL	9⅜	19⅜	5 1/16	10¼
TH3362JCL	9⅜	19⅜	5 1/16	10¼
TH3363JCL	13½	25⅜	5 1/16	14¼
TH3364JCL	14½	35⅛	5 5/16	15¼
TH3365JCL	24⅝	59 9/16	8⅜	25¾
TH3366JCL	24⅝	59 9/16	8⅜	25¾
THN3361JCL	9⅜	19⅜	5 1/16	10¼
THN3362JCL	9⅜	19⅜	5 1/16	10¼
THN3363JCL	13½	25⅜	5 1/16	14¼
THN3364JCL	14½	35⅛	5 5/16	15¼
THN3365JCL	24⅝	48 1/16	8⅜	25¾
THN3366JCL	24⅝	48 1/16	8⅜	25¾
TH, 6-pole — Figure 1				
TH6621	19	14⅜	6	19¾
TH6622	19	24⅛	6	19¾
TH6623	19	24⅛	6	19¾
TH6624	26¼	35⅜	6	27
TH6661	19	14⅜	6	19¾
TH6662	19	24⅛	6	19¾
TH6663	19	24⅛	6	19¾
TH6664	26¼	35⅜	6	27
THN6661	19	14⅜	6	19¾
THN6662	19	24⅛	6	19¾
THN6663	19	24⅛	6	19¾
THN6664	26¼	35⅜	6	27
TH, Receptacle — Figure 2				
TH3322JCH	9⅜	19⅜	5 1/16	10¼
TH3362JCH	9⅜	19⅜	5 1/16	10¼
THN3362JCH	9⅜	19⅜	5 1/16	10¼

Prices and data subject to change without notice

TAB PLACEMENT HERE

DESCRIPTION:

4.

☐ **Tab page did not contain hand written information**

☑ **Tab page contained hand written information**
***Scanned as next image**

Confidential Records Management, Inc.
New Bern, NC
1-888-622-4425
9/08

AMERICAN STANDARD

Pure luxury.

P1

water-saver Madera toilet

Vitreous China

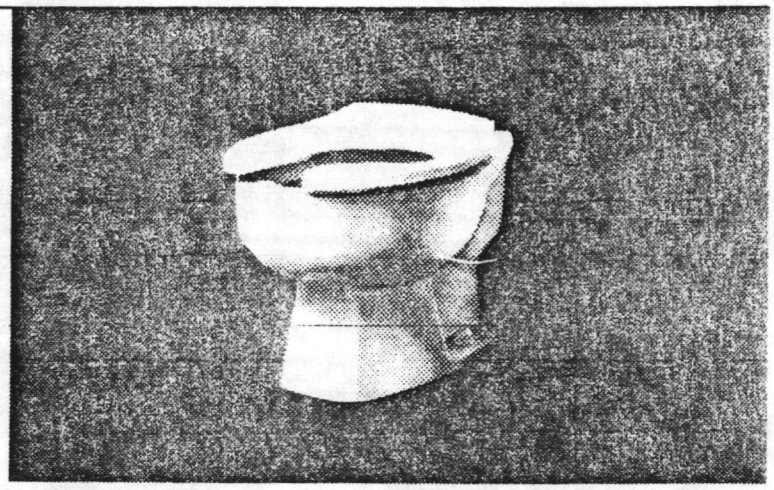

☐ **2221.026**
Water-saver Madera siphon jet toilet, vitreous china, elongated bowl, with slotted rim for bedpan holding.
Fixture only, less seat, and bolt caps.
Suggested water-saving flush valve: Sloan 110-3
Seat suggested: Olsonite #95.

☐ **2221.018** Same, less slotted rim.

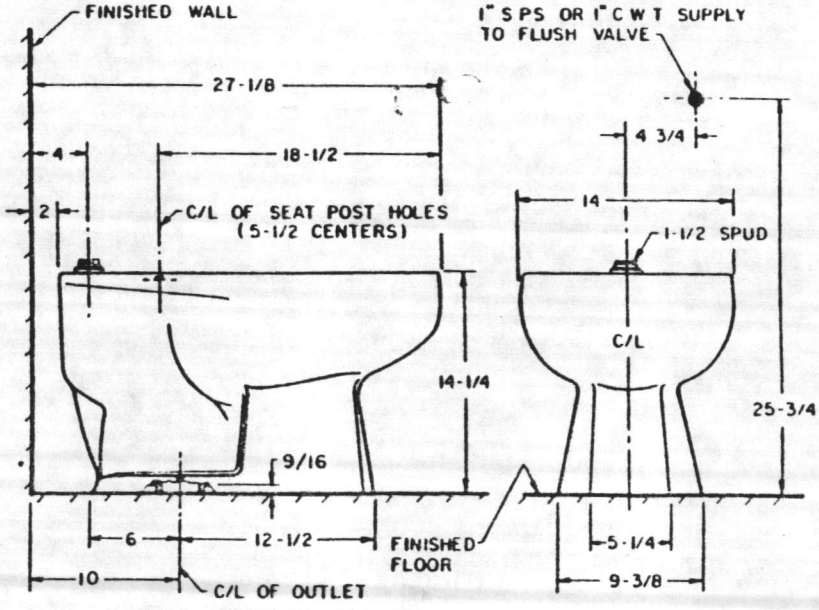

NOTE: TO COMPLY WITH AREA CODE GOVERNING THE HEIGHT OF VACUUM BREAKER ON FLUSH VALVE, THE PLUMBER MUST VERIFY DIMENSIONS SHOWN FOR SUPPLYING ROUGHING.

IMPORTANT: Dimensions of fixtures are nominal and may vary within the range of tolerances established by ANSI Standards A112.19.2.

These measurements are subject to change or cancellation. No responsibility is assumed for use of superseded or voided pages.

Copyright © 1986 American Standard Inc.

SPS 2221

P1

CHURCH
THE BEST SEAT IN THE HOUSE

SOLID PLASTIC HIGH-IMPACT POLYSTYRENE COMMERCIAL WEIGHT

295/397

Elongated / Round

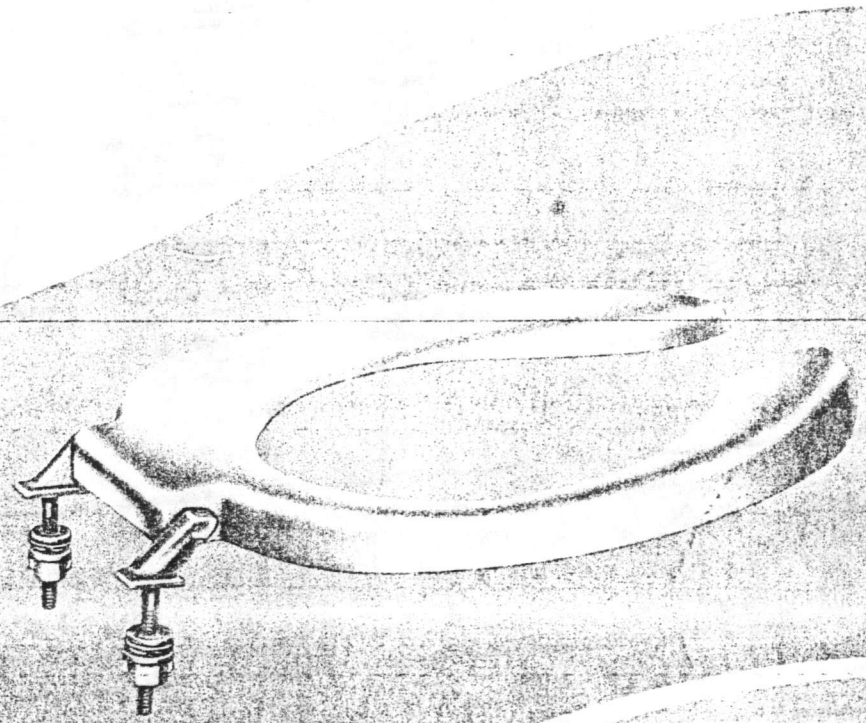

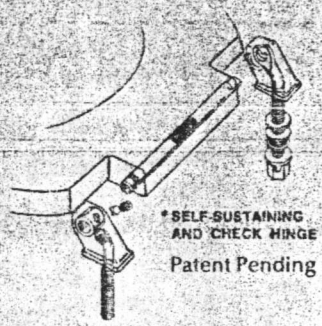

*SELF-SUSTAINING AND CHECK HINGE
Patent Pending

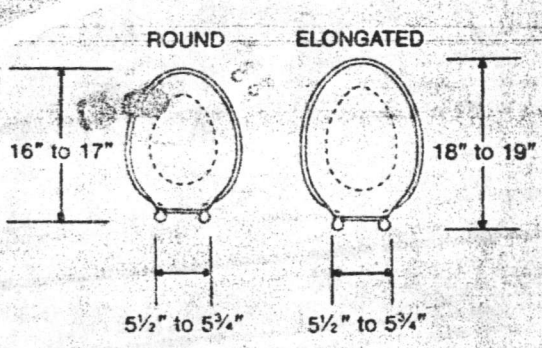

☐ **295** (5334.016)
Commercial weight, solid plastic elongated, open front toilet seat; 310B anodized aluminum hinge posts, no check.
☐ White ☐ Black

☐ **295C** (5334.024)
Commercial weight, solid plastic elongated, open front toilet seat; 3150 stainless steel hinge posts with check.
☐ White ☐ Black
☐ Code 1 Colors *See Color Chart*

☐ **295NSSC*** (5334.107)
Commercial weight, solid plastic elongated, open front toilet seat; 3150/3155 stainless steel hinge posts with combination self-sustaining and check.
☐ White ☐ Black

☐ **397** (5330.147)
Commercial weight, solid plastic round, open front toilet seat; 310B anodized aluminum hinge posts, no check.
☐ White ☐ Black

☐ **397C** (5333.356)
Commercial weight, solid plastic round, open front toilet seat; 3150 stainless steel hinge posts with check.
☐ White ☐ Black
☐ Code 1 Colors *See Color Chart*

☐ **397NSSC*** (5330.220)
Commercial weight, solid plastic round, open front toilet seat; 3150/3155 stainless steel hinge posts with combination self-sustaining and check.
☐ White ☐ Black

P1

SLOAN
Flush Valves

ROYAL 115

CODE NUMBER 3010300

Quiet Exposed Closet Flush Valve, Chrome Plated, metal oscillating non-hold-open handle, 1-inch I.P.S. screw driver Bak-Chek angle stop with protective cap, adjustable tailpiece, vacuum breaker flush connection and spud coupling for 1½-inch top spud, wall and spud flanges.

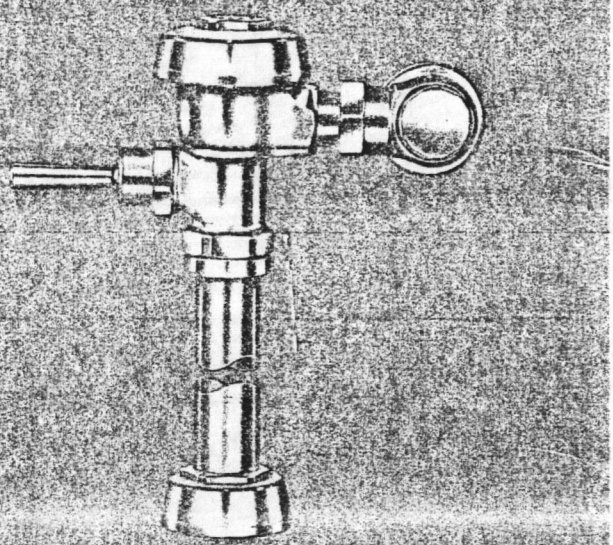

NOTE: Specify pipe supports if desired. See page 127.

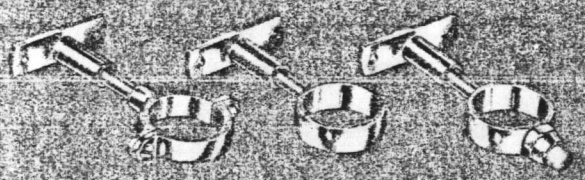

ORDERING PROCEDURE

a Name of valve—Royal, Crown or Naval.

b Installation number—**115.**

c Letters designating variations, if any. (Extend **PAGE 127** for reference to variations).
Example—**Royal 115YB**

d Convert to Code Number using table below:

To order Royal Flush Valves
Insert **1** in box [1].

To order Crown Flush Valves
Insert **2** in box [2].

To order Naval Flush Valves
Insert **4** in box [4].

Example—Code number for
Royal 115YB is 3010311

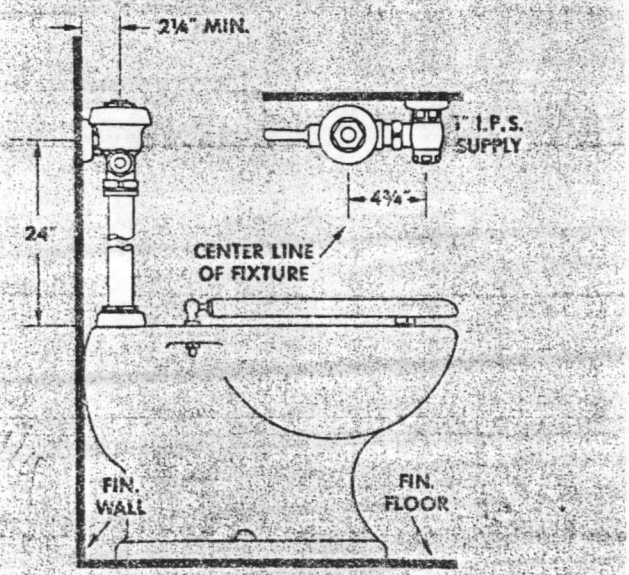

Installation No.	Variations	Code Number
115		30 ☐ 0300
115	YA	30 ☐ 0306
115	YI	30 ☐ 0308
115	YB	30 ☐ 0311
115	YBYA	30 ☐ 0312
115	YBYI	30 ☐ 0314
115	YBHL-3	30 ☐ 0320
115	YC	30 ☐ 0323
115	YCYA	30 ☐ 0324
115	YCYI	30 ☐ 0326
115	HL-3	30 ☐ 0330

AMERICAN STANDARD

Pure luxury.

P2

elongated water-saver Cadet toilet

18" (457mm) high for elderly
Vitreous China

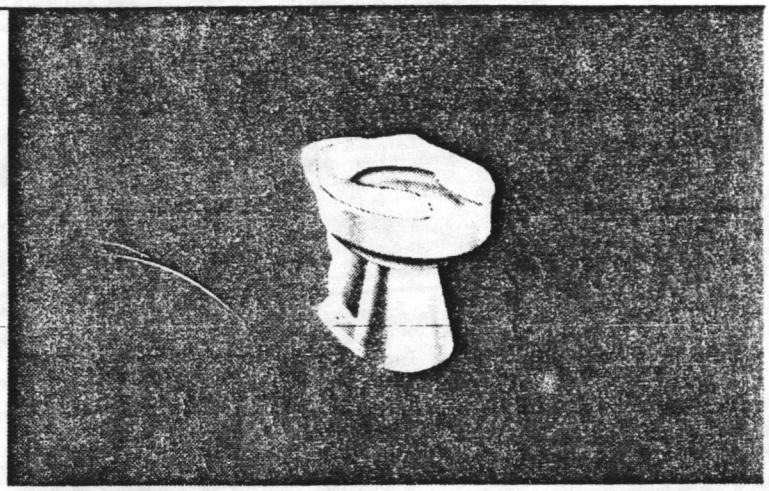

9468.018
Elongated water-saver Cadet 18" (457mm) high siphon jet toilet, vitreous china, elongated bowl, 1½" top spud.
Fixture only, less seat and bolt caps.

Suggested flush valve: Sloan Royal 115-3
Seat shown: Olsonite #95

water surface, seal, ballpass and operation meets or exceeds ANSI A112.19.2M code requirements.

minimum working pressure—20 psi at valve while flushing.

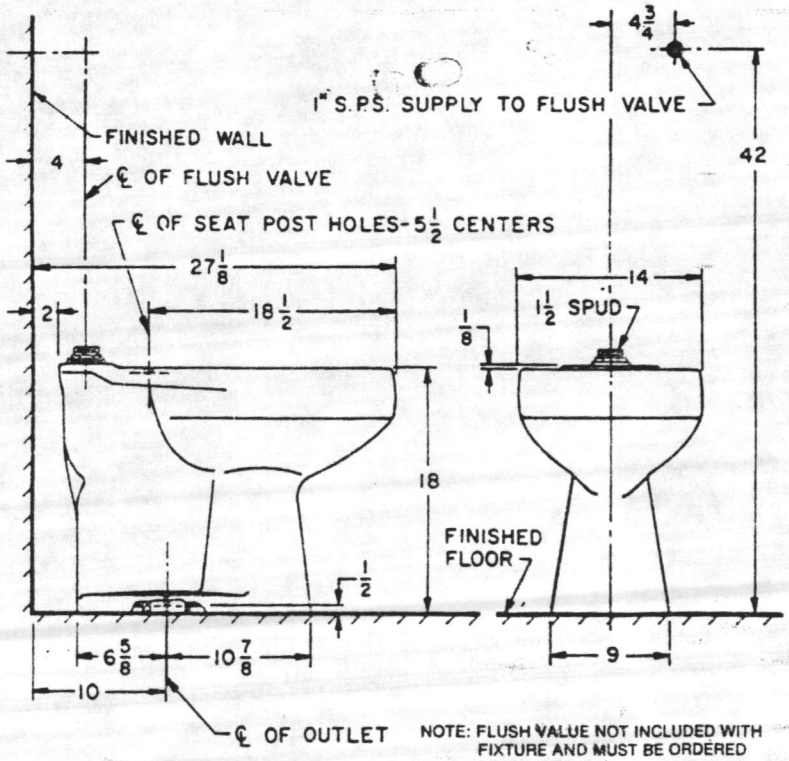

NOTE: TO COMPLY WITH AREA CODE GOVERNING THE HEIGHT OF VACUUM BREAKER ON FLUSH VALVE, THE PLUMBER MUST VERIFY DIMENSIONS SHOWN FOR SUPPLY ROUGHING.

NOTE: FLUSH VALUE NOT INCLUDED WITH FIXTURE AND MUST BE ORDERED SEPARATELY.

IMPORTANT: Dimensions of fixtures are nominal and may vary within the range of tolerances established by ANSI Standards A112.19.2.

These measurements are subject to change or cancellation. No responsibility is assumed for use of superseded or voided pages.

Copyright © 1986 American Standard Inc.

SPS 9468

SLOAN
Flush Valves

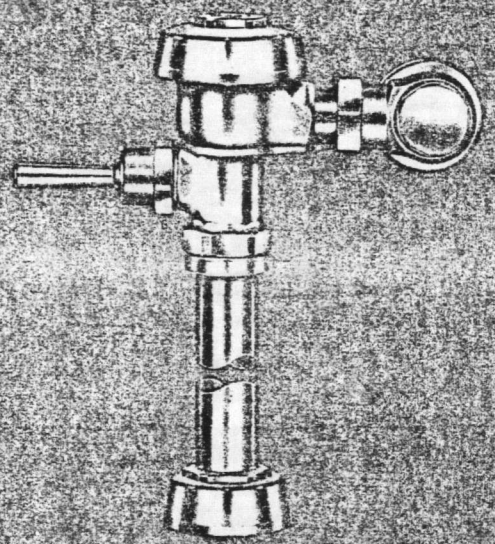

NOTE: Specify pipe supports if desired. See page 127.

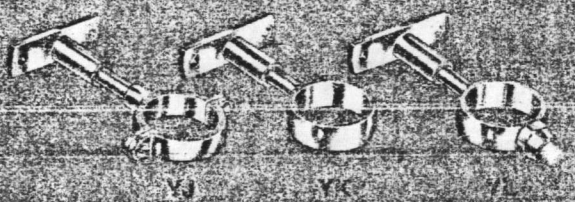

ROYAL 115

CODE NUMBER 3010300

Quiet Exposed Closet Flush Valve, Chrome Plated, metal oscillating non-hold-open handle, 1-inch I.P.S. screw driver Bak-Chek angle stop with protective cap, adjustable tailpiece, vacuum breaker flush connection and spud coupling for 1½-inch top spud, wall and spud flanges.

ORDERING PROCEDURE

a Name of valve—Royal, Crown or Naval.

b Installation number—**115.**

c Letters designating variations, if any. (Extend **PAGE 127** for reference to variations).
Example—**Royal 115YB**

d Convert to Code Number using table below:

To order Royal Flush Valves
Insert **1** in box [1].

To order Crown Flush Valves
Insert **2** in box [2].

To order Naval Flush Valves
Insert **4** in box [4].

Example—Code number for **Royal 115YB** is **3010311**

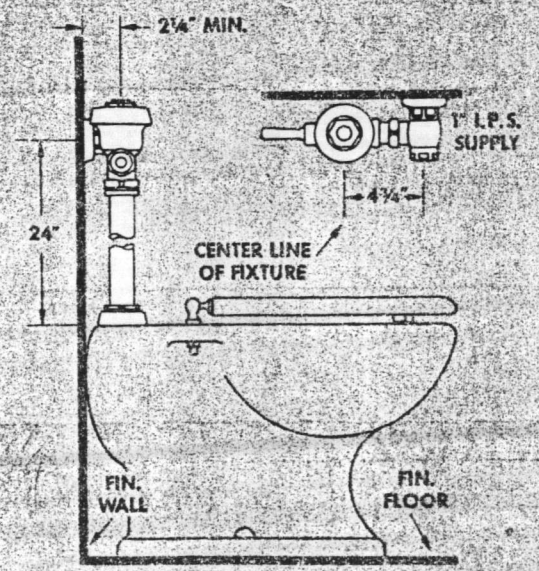

Installation No.	Variations	Code Number
115		30 ☐ 0300
115	YA	30 ☐ 0306
115	YI	30 ☐ 0308
115	YB	30 ☐ 0311
115	YBYA	30 ☐ 0312
115	YBYI	30 ☐ 0314
115	YBHL-3	30 ☐ 0320
115	YC	30 ☐ 0323
115	YCYA	30 ☐ 0324
115	YCYI	30 ☐ 0326
115	HL-3	30 ☐ 0330

P2

CHURCH
"THE BEST SEAT IN THE HOUSE"

SOLID PLASTIC HIGH-IMPACT POLYSTYRENE COMMERCIAL WEIGHT

295/397
Elongated / Round

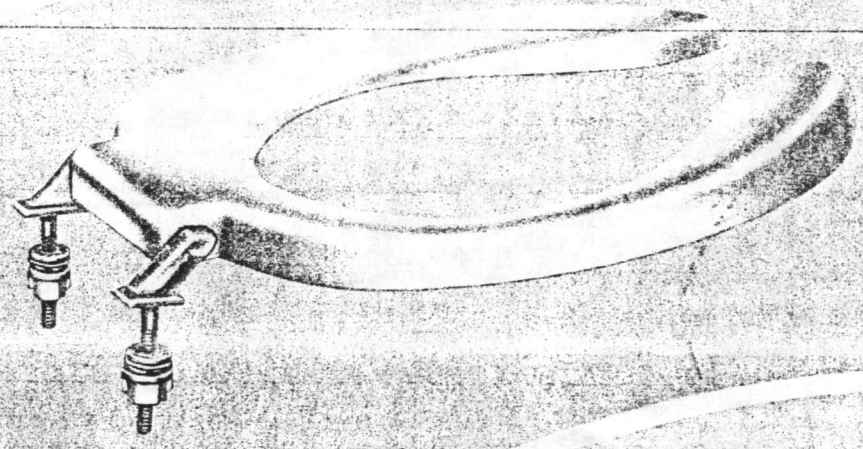

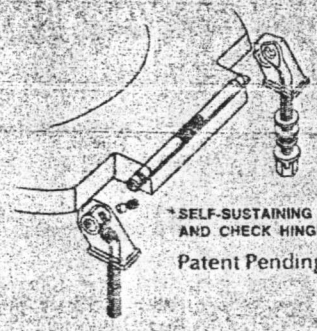

*SELF-SUSTAINING AND CHECK HINGE
Patent Pending

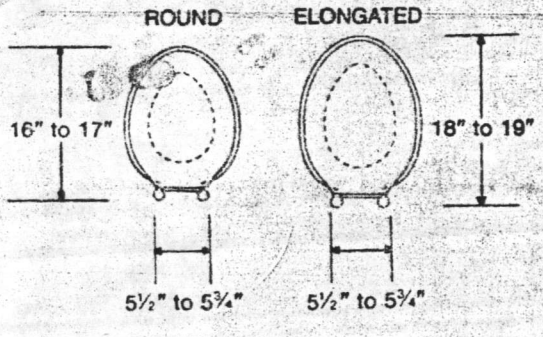

☐ **295** (5334.016)
Commercial weight, solid plastic elongated, open front toilet seat; 310B anodized aluminum hinge posts, no check.
☐ White ☐ Black

☐ **295C** (5334.024)
Commercial weight, solid plastic elongated, open front toilet seat; 3150 stainless steel hinge posts with check.
☐ White ☐ Black
☐ Code 1 Colors *See Color Chart*

☐ **295NSSC*** (5334.107)
Commercial weight, solid plastic elongated, open front toilet seat; 3150/3155 stainless steel hinge posts with combination self-sustaining and check.
☐ White ☐ Black

☐ **397** (5330.147)
Commercial weight, solid plastic round, open front toilet seat; 310B anodized aluminum hinge posts, no check.
☐ White ☐ Black

☐ **397C** (5333.356)
Commercial weight, solid plastic round, open front toilet seat; 3150 stainless steel hinge posts with check.
☐ White ☐ Black
☐ Code 1 Colors *See Color Chart*

☐ **397NSSC*** (5330.220)
Commercial weight, solid plastic round, open front toilet seat; 3150/3155 stainless steel hinge posts with combination self-sustaining and check.
☐ White ☐ Black

AMERICAN STANDARD

Pure luxury.

P3

water-saver Trimbrook urinal

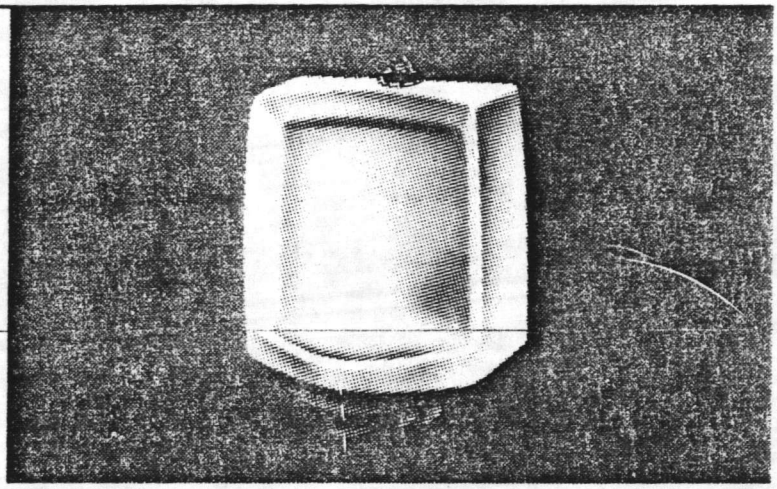

6561.017
top spud

Trimbrook vitreous china watersaver (1.5 gallons per flush) siphon jet urinal, with 3/4" inlet spud, flushing rim, extended stall side for privacy, outlet connection threaded 2" inside, wall hangers. Fixture only.
Suggested flush valve: Sloan Royal 186.

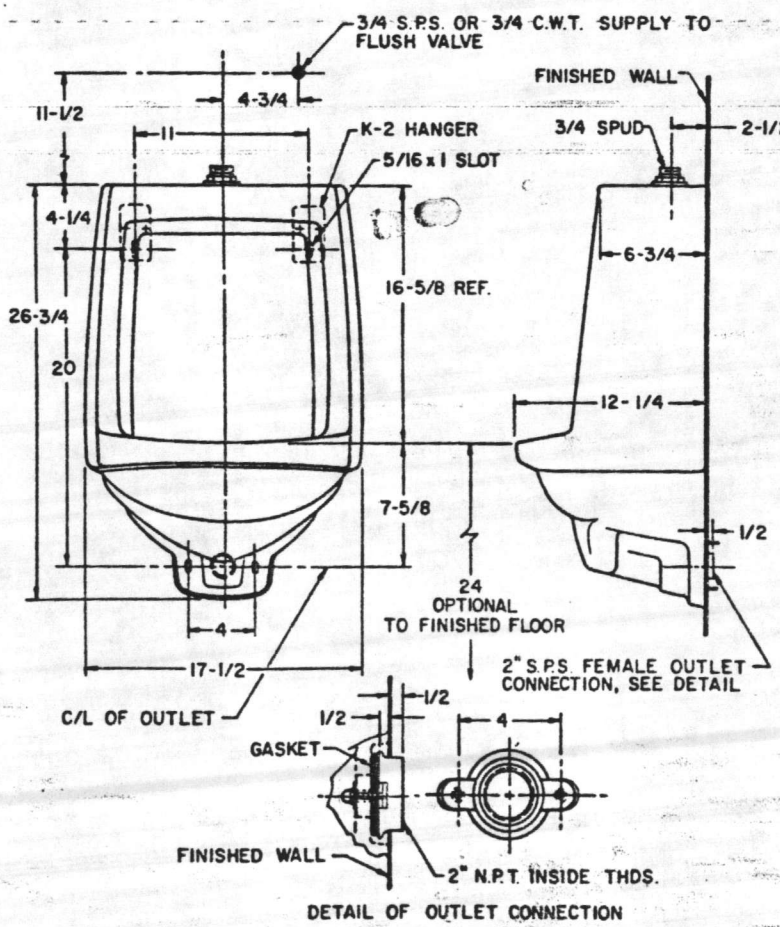

DETAIL OF OUTLET CONNECTION

NOTE: FLUSH VALVE NOT INCLUDED WITH FIXTURE AND MUST BE ORDERED SEPARATELY.

PLUMBER NOTE—Provide suitable reinforcement for all wall supports.

IMPORTANT: Dimensions of fixtures are nominal and may vary within the range of tolerances established by ANSI Standards A112.19.2

These measurements are subject to change or cancellation. No responsibility is assumed for use of superseded or voided pages.

Copyright © 1986 American Standard Inc.

SPS 6561

SPECIFICATION SHEET

SLOAN
Flush Valves

P3

ROYAL 186

Quiet Exposed Urinal Flush Valve, Chrome Plated, metal oscillating non-hold-open handle, ¾-inch I.P.S. screw driver Bak-Chek angle stop with protective cap, adjustable tailpiece, vacuum breaker flush connection and spud coupling for ¾-inch top spud, wall and spud flanges.

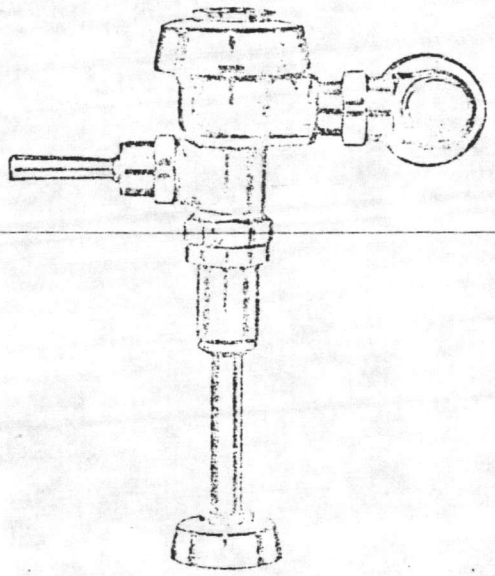

Check variations to the standard specification in the appropriate box below.

✓	Variations	Description
	K	Wheel handle stop
	YA	Nickel-silver handle
	YB	Sweat-solder adaptor kit
	YC	Cast wall flange with set screw
	XYV	Less vacuum breaker

OTHER (describe below)

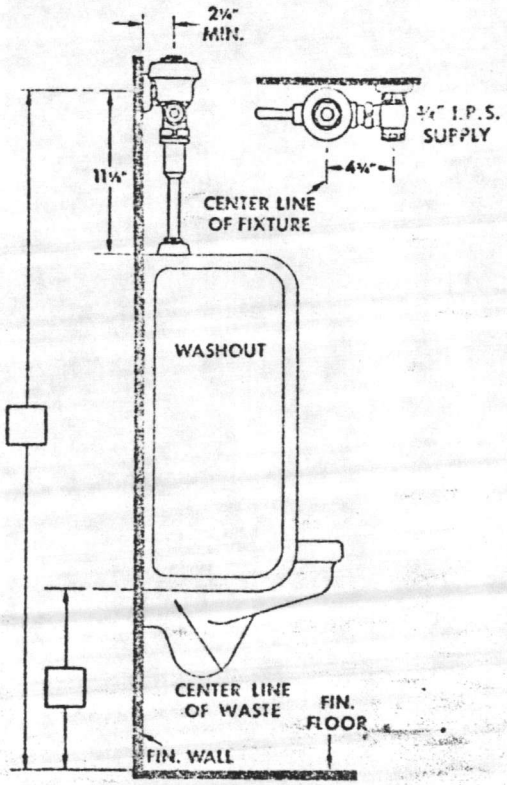

This space for Architect / Engineer approval

SLOAN VALVE COMPANY
10500 SEYMOUR AVE. • FRANKLIN PARK, ILL.

PRINTED IN U. S. A.

AMERICAN-STANDARD WALL HUNG LAVATORIES

P4

REGALYN LAVATORY

" spread faucet holes. 19" x 17" 4867.016
8" spread faucet holes. 20" x 18" 4867.024
4" center faucet holes. 19" x 17" 4869.012
4" center faucet holes. 20" x 18" 4869.020

Acid-resisting enameled cast iron. Front overflow. Supplied with wall hanger.
Shown with 2248.714 faucet with brass crown handles and pop-up drain.

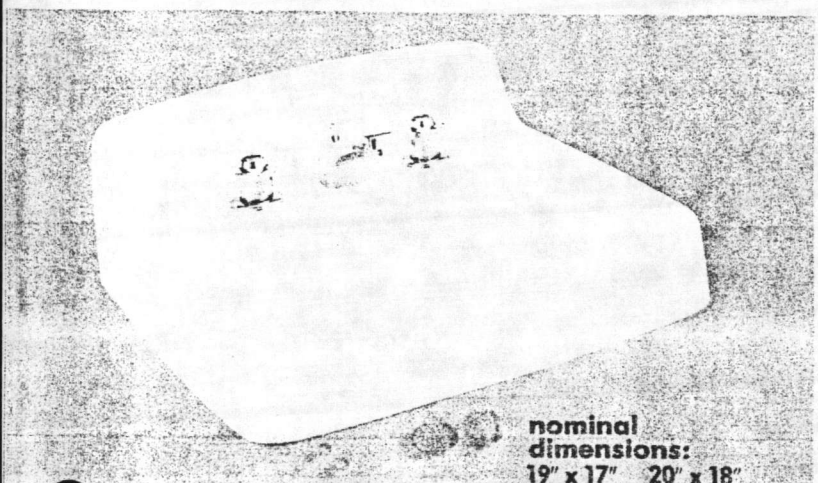

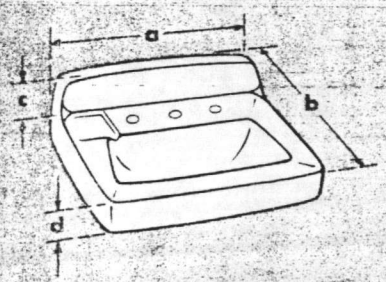

nominal dimensions:

19" x 17"	20" x 18"
a-19"	a-20"
b-17"	b-18"
c-3½"	c-3¾"
d-4"	d-4"

bowl sizes:
19" x 17"
14½" wide
8⅞" front to back
6" deep

20" x 18"
15½" wide
9⅞" front to back
6" deep

(fixture only)

LEDGEMERE LAVATORY

13" x 13" 5300.033
16" x 14" 5300.124
18" x 15" 5300.215

Acid-resisting enameled cast iron. Front overflow. Integral soap depression. Supplied with wall hanger and factory installed 2605.293 faucet with pop-up drain.

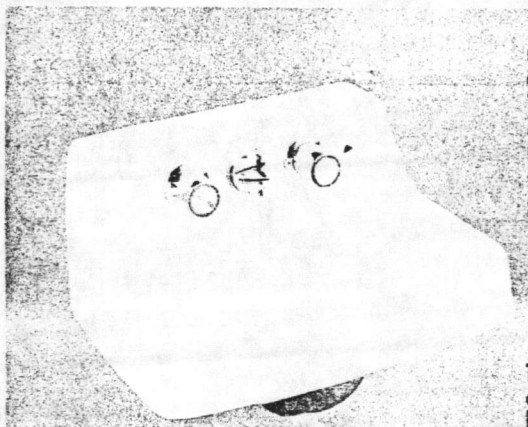

nominal dimensions:
13" x 13"
a-13"
b-13"
c-3⅝"
d-3"

16" x 14"
a-16"
b-14"
c-4"
d-3"

18" x 15"
a-18"
b-15"
c-4"
d-3"

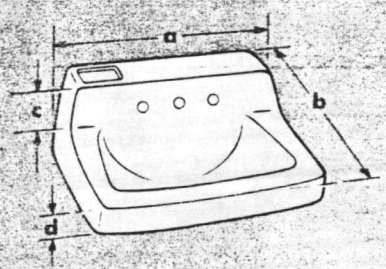

bowl sizes:
13" x 13"
10" wide
8½" front to back
5" deep

16" x 14"
12¾" wide
8⅞" front to back
6" deep

18" x 15"
14½" wide
9¾" front to back
6" deep

(fixture complete with faucet and wall hanger)

SUGGESTED FITTINGS

For Detailed Information See Fittings Section

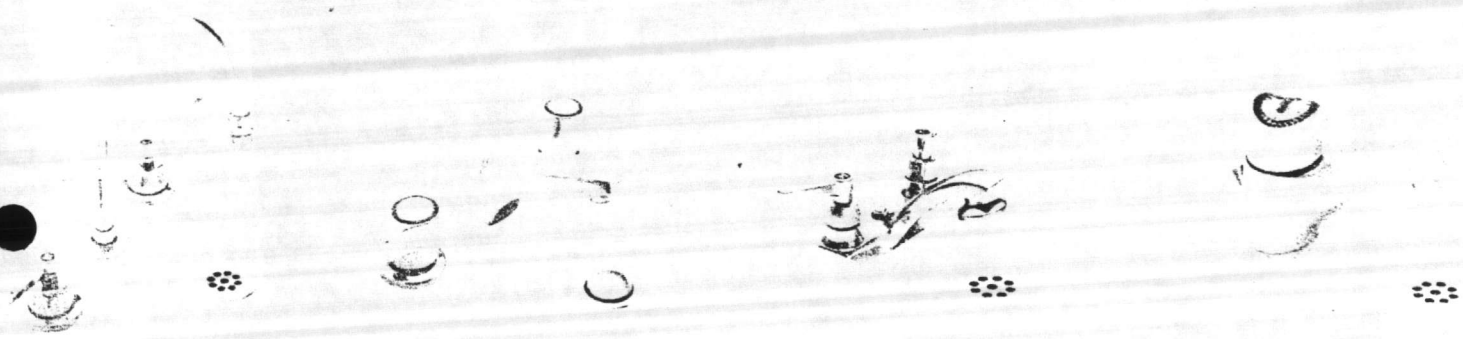

2238.202 **2248.185** **2103.620 w/ 2411.015** **2000.100 w/ 2411.015**

CHICAGO FAUCETS

THE SYMBOL OF QUALITY

2100 SOUTH NUCLEAR DRIVE • DES PLAINES, ILLINOIS 60018
312 694-4400

FILE NUMBER	FITTING NUMBER
P.4	802A-408
	SECTION: A — PAGE: 28

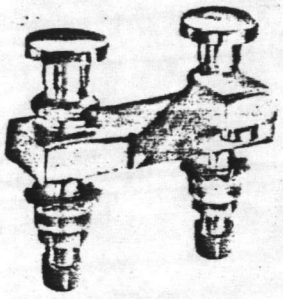

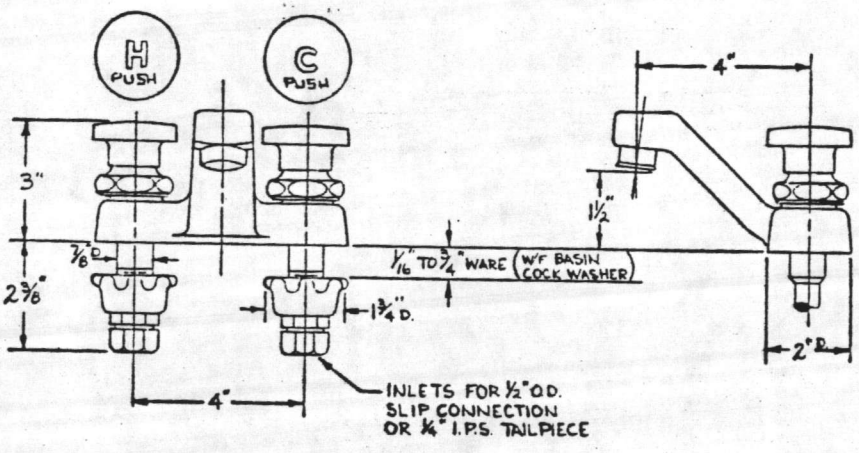

Rough in dimensions may vary ¼" plus or minus.

TECHNICAL DATA

DESCRIPTION:	No. 802A-408 Palm button centerset adjustable slow closing lavatory faucet with 4" spout and E12 Softflo.
OPERATING UNIT:	Self-contained and interchangeable.
MATERIAL:	Casting - commercial red brass alloy.
CHROME PLATE:	Exceeds U. S. Government specifications.
C.S.I. SECTION:	15

McGUIRE

P4

SINK STRAINERS, TRAY PLUGS and P.O. PLUGS (cont'd)

McGuire Cat. Number	SIMILAR				Standard Carton	Weight per C
	Am. Std. No.	Crane No.	Eljer No.	Kohler No.		
152	4311.015	8-5243	803-0570	K-8807	50	100

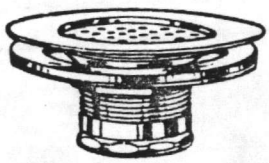

Chrome plated wrought wide top sink strainer with 1½"x4" 20 gauge tailpiece.

McGuire Cat. Number	SIMILAR				Standard Carton	Weight per C
	Am. Std. No.	Crane No.	Eljer No.	Kohler No.		
155	2440.014	8-5221	803-0542	K-7712	44	75

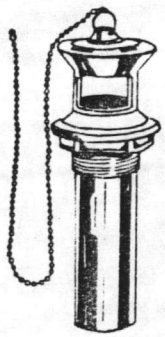

Chrome plated cast brass p.o. plug with chain and stopper and 1¼" O.D. tailpiece.

McGuire Cat. Number	SIMILAR				Standard Carton	Weight per C
	Am. Std. No.	Crane No.	Eljer No.	Kohler No.		
155-A	2411.015	8-5222	803-0552	K-7715	44	82

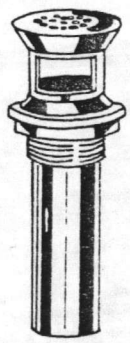

Chrome plated cast brass p.o. plug with open grid strainer and 1¼" O.D. 17 gauge tailpiece.
Available with 1½" O.D. tailpiece.

McGuire Cat. Number	SIMILAR				Standard Carton	Weight per C
	Am. Std. No.	Crane No.	Eljer No.	Kohler No.		
155MP					50	100

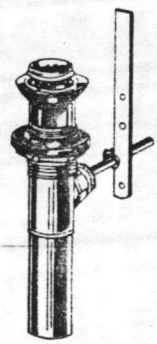

Chrome plated cast brass p.o. plug with 1¼" lavatory drain.

McGuire Cat. Number	SIMILAR				Standard Carton	Weight per C
	Am. Std. No.	Crane No.	Eljer No.	Kohler No.		
155-WC	7723.018		803-0530	K-13885	41	170

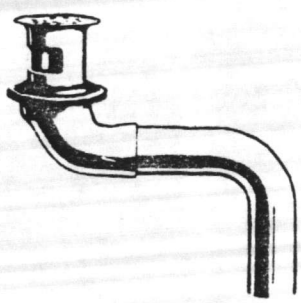

Chrome plated wheelchair lavatory strainer. Cast grid drain plug with strainer and offset drain assembly with 1¼" O.D. tailpiece. 17 gauge.
Note . . . For wheelchair lavatory supply see page 6 Cat. Number 158-WC.

AMERICAN STANDARD

Pure luxury.

PS

Wheelchair patient's lavatory

Vitreous China

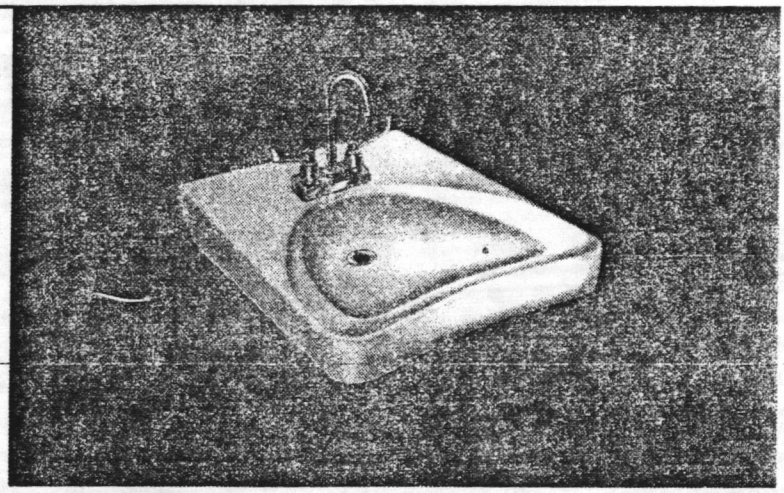

9141.011

Wheelchair lavatory with faucet holes on 4" (102mm) centers, front overflow, for concealed arm support. Fixture only.

Shown with 7516.172 lavatory fitting with 4" brass wrist handles and 7723.018 drain assembly, 3/8 flex supplies and 1¼ O.D. "P" trap.

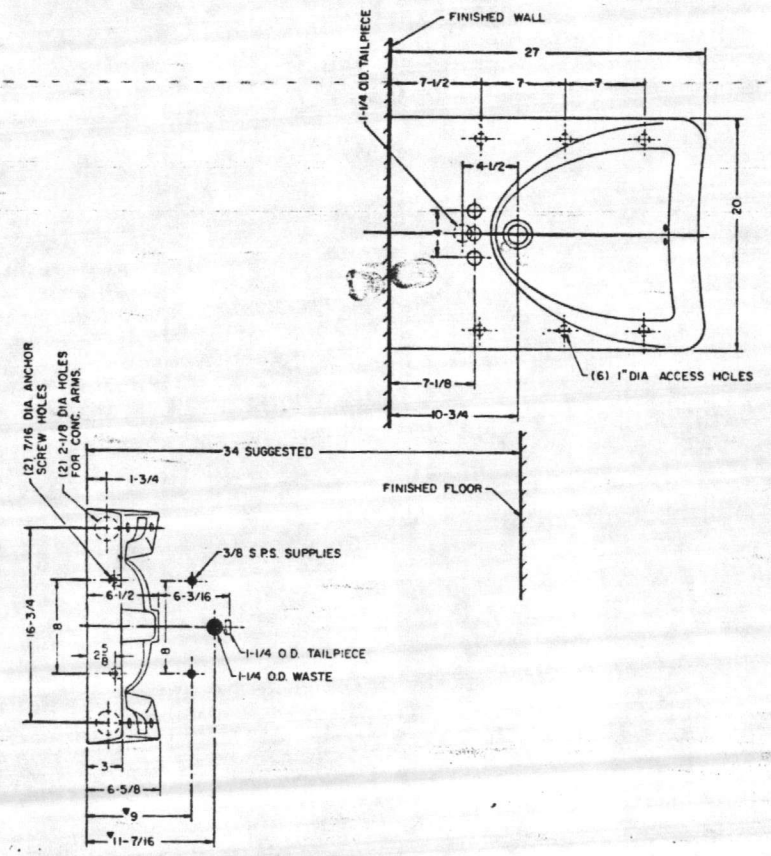

NOTE: CONCEALED ARM SUPPORT AS REQUIRED TO BE FURNISHED BY OTHERS.

ROUGHING-IN MEAS. FOR 9141.011 WHEELCHAIR LAVATORY SHOWN WITH CTR. SET FITTING, 3/8 FLEX. SUPPLIES, 7723.018 DRAIN ASSEMBLY AND 1¼ x 1¼ O.D. "P" TRAP.

NOTE: METHOD AND MEANS OF SUPPORT TO BE FIGURED AND FURNISHED BY OTHERS.

*DIMENSIONS SHOWN FOR LOCATION OF SUPPLIES AND "P" TRAP ARE SUGGESTED.

IMPORTANT: Dimensions of fixtures are nominal and may vary within the range of tolerances established by ANSI Standards A112.19.2.

These measurements are subject to change or cancellation. No responsibility is assumed for use of superseded or voided pages.

Copyright © 1986 American Standard Inc.

SPS 9141

CHICAGO FAUCETS

THE SYMBOL OF QUALITY

2100 SOUTH NUCLEAR DRIVE • DES PLAINES, ILLINOIS 60018
312 694-4400

FILE NUMBER	FITTING NUMBER
P-5	895-317
SECTION: H	PAGE: 54

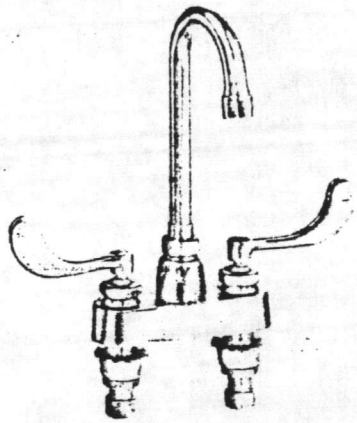

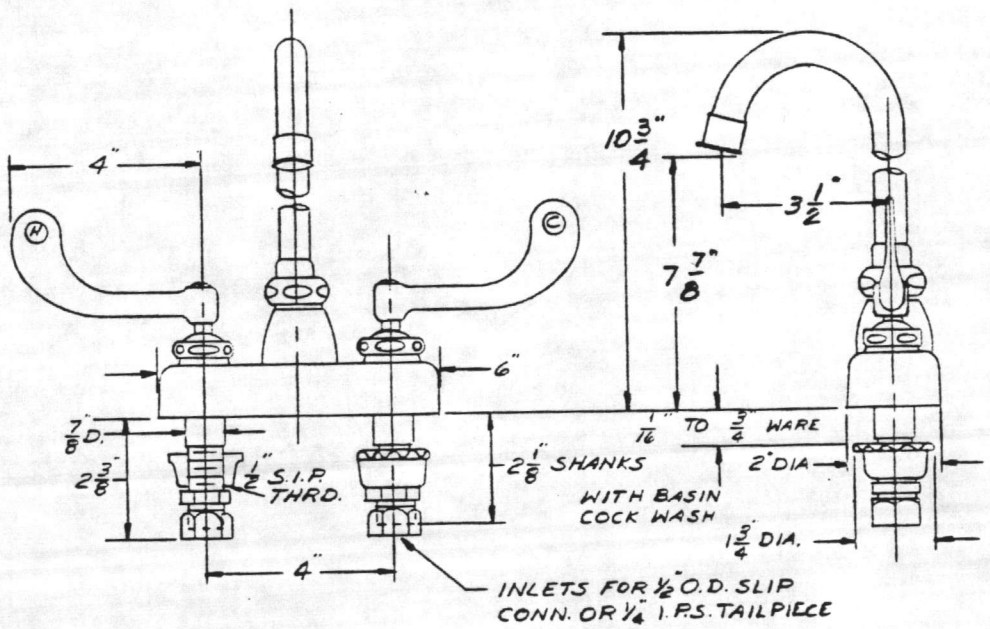

Rough in dimensions may vary ¼" plus or minus.

TECHNICAL DATA

DESCRIPTION: No. 895-317 Hi-Lite centerset lavatory faucet with #317 4" wrist blade handles, GN1A-E3 rigid/swing convertible gooseneck spout with E3 Softflo outlet.

OPERATING UNIT: Self-contained and interchangeable.

MATERIAL: Casting - commercial red brass alloy.

CHROME PLATE: Exceeds U. S. Government specifications.

C.S.I. SECTION: 15

p 7

OASIS®

Against-A-Wall and Free-Standing Water Coolers

- ☐ ODP8A
- ☐ ODP8AH (Hot 'N Cold)
- ☐ ODP14A
- ☐ ODP20
- ☐ ODP20-SCP

These coolers are designed to be installed flush to a wall with plumbing connections concealed within the cabinet. Flush installation conserves space and simplifies housekeeping. Their design also permits the traditional free-standing installation.

Big capacity. That's what the Model ODP20 offers: Up to 20 gallons per hour of chilled water for high traffic locations.

Mocha Tan cabinet is handsome, yet ruggedly built. Easy-to-clean polished type 304 stainless steel top has anti-splash ridge. Dial-A-Drink® Bubbler with built-in pressure regulator, furnishes smooth, steady flow of water.

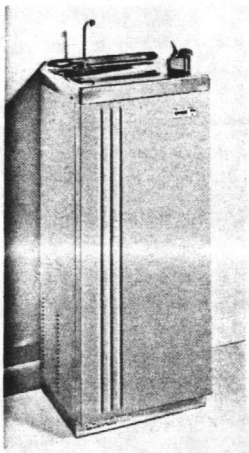

ODP8AH

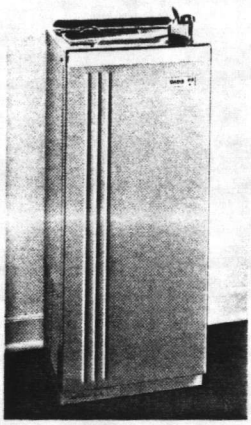

ODP20-SCP

Hot 'N Cold Model ODP8AH puts instant hot water beverages where people are. Saves time for coffee breaks; makes refreshment available to customers.

Corrosion Resistant Model ODP20-SCP has stainless steel cabinet, frame, base parts and fasteners. Plus a special protective coating applied to compressor and condenser.

SUGGESTED SPECIFICATIONS

Cooler(s) shall deliver at least ____ gph of 50°F. water at 80°F. inlet water and 90°F. room temperature.

Bubbler shall have lever handle and built-in pressure regulator to deliver smooth, steady flow at supply pressures from 20 to 125 psi.

Cooling tank shall be red brass with copper refrigerant coils. Refrigerant flow controlled by capillary tube. Temperature controlled by adjustable thermostat.

All water carrying lines shall be copper.

Water cooler(s) shall have limited five-year warranty on the sealed refrigeration system and most component parts.

Cooler(s) shall meet specifications of U.S. Department of Commerce Bureau of Standards; Public Health, Sanitary and Plumbing Codes; and be Certified to ARI, Listed by Underwriters' Laboratories, and Approved by CSA. Water cooler(s) shall be OASIS Model(s) _____ .

OASIS Against-A-Wall and Free-Standing Water Cooler Specifications

Model	Capacity in GPH of 50°F.* Drinking Water Ambient Air Temperature 70°F.	80°F.	90°F.*	100°F.	Base Rate GPH	Pre-Cooler	115 Volts, 60Hz. Compr. HP	Full Load Amps	Net Weight, Approx.
ODP8A	9.2	8.6	8.0	7.2	8.0	No	1/5	5.0	94 Lbs.
ODP8AH+	9.2	8.6	8.0	7.2	8.0	No	1/5	9.35	96 Lbs.
ODP14A	17.0	15.4	14.0	12.6	8.0	Yes	1/5	5.0	96 Lbs.
ODP20	22.0	21.0	20.0	19.0	12.0	Yes	1/3	7.5	97 Lbs.
ODP20-SCP	22.0	21.0	20.0	19.0	12.0	Yes	1/3	7.5	99 Lbs.

Number of People Served (Bubbler) Per One Gallon of Capacity At ARI Standard Rating Condition	
Offices, Hospitals, Schools, Stores, and Lobbies	40
Light Manufacturing	20
Heavy Manufacturing	15
Hot, Heavy Manufacturing	10

Note: Since ARI Standard 1010-82 contains no application guide, this table was developed by our Engineering Department.

*Air Conditioning and Refrigeration Institute Standard Rating Condition 80°F. inlet water temperature.

+Hot 'N Cold model delivers 45 six-ounce cups of hot water per hour in addition to cold water.

Dial-A-Drink® Bubbler: Built-in pressure regulator assures a smooth, steady flow at line pressures from 20 to 125 psi. All metal parts of either stainless steel or brass.

Stainless Steel Top: One-piece type 304 polished stainless steel with effective anti-splash ridge. Easy-to-clean integral strainer grid.

Cabinet: Structural steel framework fabricated from 13-gauge type 2 aluminized steel. Steel panels have standard finish of cathodically electrocoated acrylic enamel in Mocha Tan. Also available in optional baked enamel colors (see Color Selector Guide), no extra charge. Satin finish stainless steel cabinet available at extra cost. Front panel is removable for easy access to plumbing and electrical connections. Recessed, rust-resistant stainless steel base for corrosion protection.

Model ODP20-SCP has stainless steel cabinet, frame, base parts and fasteners. Plus a special protective coating applied to compressor and condenser.

Pre-Cooler: Cools incoming water with cold waste water. Double wall construction meets codes. All copper construction. Hot-tin bonded.

Tank and Cooling Coil: High efficiency tank-type cold water storage system reduces starts and operating time of compressor. Two metal walls between drinking water and refrigerant. All water carrying lines are constructed of copper tubing. Connection provided for remote fountain.

Cooling Tank Insulation: Removable, molded, expanded bead polystyrene.

Cold Water Thermostat: Adjustable thermostat controls cold water temperature.

Refrigeration Unit: Fan cooled condenser. Internally spring mounted, hermetically sealed compressor with automatic overload protector. No lubrication needed. Refrigerant is controlled by accurately calibrated capillary tube.

Electrical: Furnished with 3-wire service cord and polarized plug.

Hot Water System (Model ODP8AH only): 85-15 red brass. Fiberglass insulated. 500 watt tubular copper sheathed, externally bonded heating element. Thermostat with "off" position and adjustable to 185°F. Self-closing valve vented to atmosphere to eliminate need for pressure/temperature relief devices in hot water system. Polished chrome-plated faucet, red plastic handle.

Accessory Glass Fillers: Push-down (A550R), push-back (A525R), push button (A500R). Adapter kit for the above is available for field installation.

Foot Pedal: Factory installed on special request, or available in kit form for field installation.

Limited 5-Year Warranty (Continental limits of the United States and Canada): Five years on the sealed refrigeration system and most component parts. Detailed warranty certificate enclosed with each water cooler; sample copy available upon request.

Models covered by these specifications comply with all known Plumbing Codes. Listed by Underwriters' Laboratories, Approved by Canadian Standards Association, and Certified to Air Conditioning and Refrigeration Institute.

EXPORT

Special Export Models: ODP14A-50/60 and ODP20-50/60 are operable on 220 volts, 50/60 Hertz without transformer. Compressor hp 1/4 and 1/3, respectively. UL, CSA and ARI not applicable to special export models.

Warranty: One year on the sealed refrigeration system and most component parts. Four-year replacement contract on sealed refrigeration system. Detailed warranty certificate enclosed with each water cooler; sample copy available upon request.

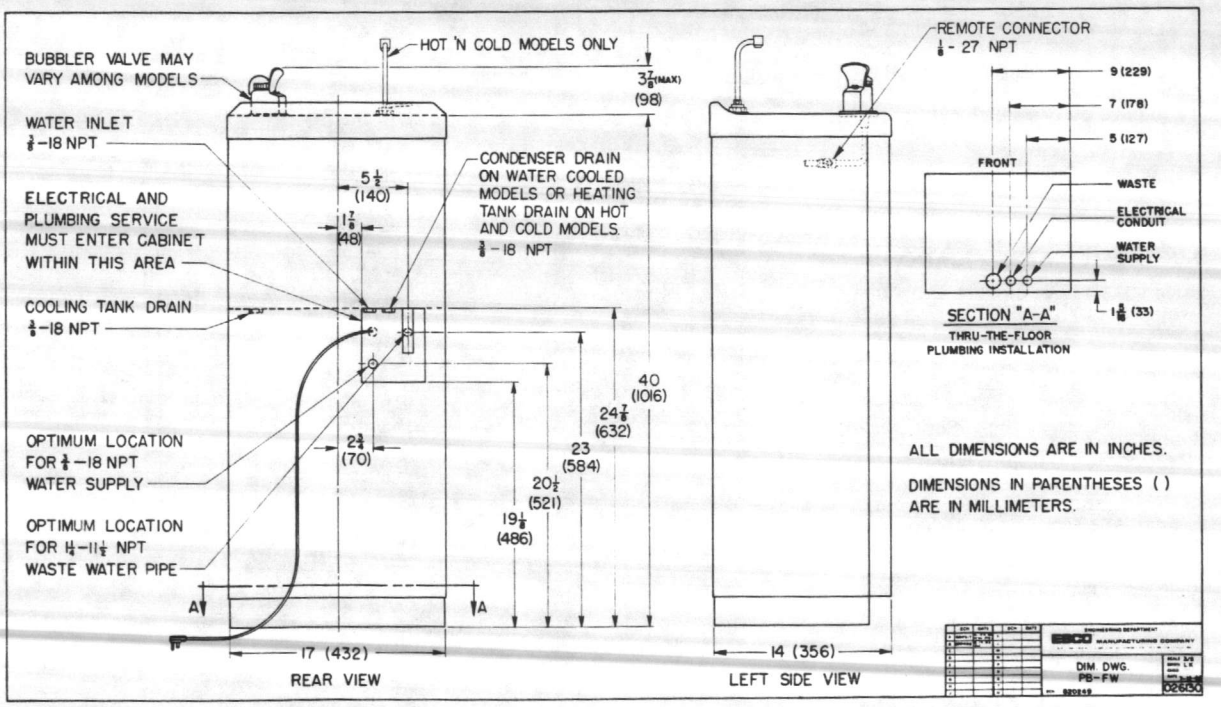

EBCO® MANUFACTURING COMPANY
265 N. HAMILTON RD. • COLUMBUS, OHIO 43213-1383

Specifications are subject to change without notice.

Printed in U.S.A.

P8

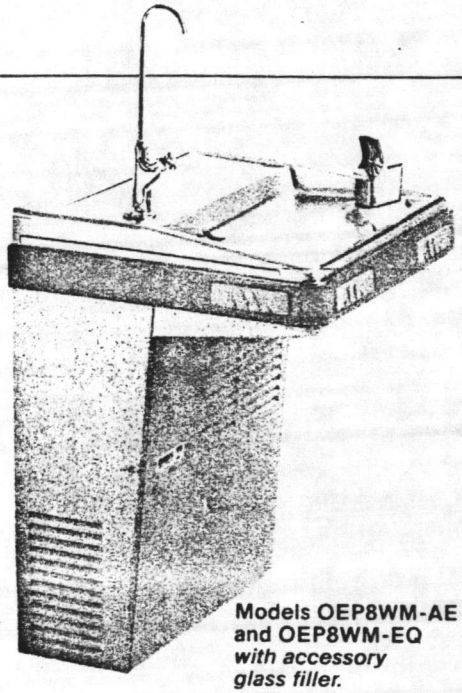

Models OEP8WM-AE and OEP8WM-EQ ***with accessory glass filler.***

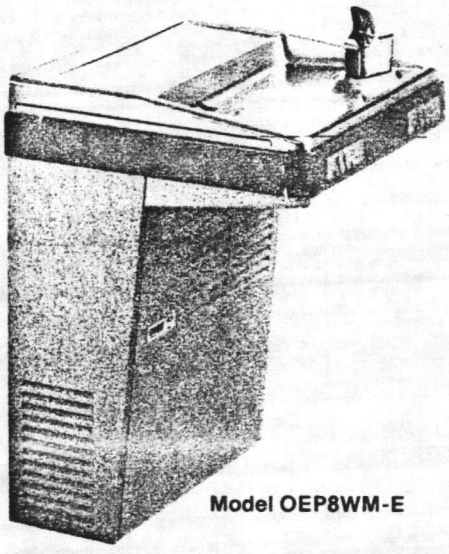

Model OEP8WM-E

Model OEP8WM

OASIS Wheelchair Water Cooler Specifications

Model	Capacity in GPH of 50°F.* Drinking Water — Ambient Air Temperature				Base Rate GPH	Pre-Cooler	115 Volts, 60 Hz.		Net Weight, Approx.
	70°F.	80°F.	90°F.*	100°F.			Compr. HP	Full Load Amps	
OEP8WM-AE	9.0	8.4	7.8	7.1	7.8	No	1/5	5.5	59 Lbs.
OEP8WM-EQ	9.0	8.4	7.8	7.1	7.8	No	1/5	5.5	59 Lbs.
OEP8WM-E	9.0	8.4	7.8	7.1	7.8	No	1/5	5.5	59 Lbs.
OEPWM	9.0	8.4	7.8	7.1	7.8	No	1/5	5.5	59 Lbs.
OEPWM	FOUNTAIN ONLY								27 Lbs.

Number of People Served (Bubbler) Per One Gallon of Capacity at ARI Standard Rating Condition	
Offices, Hospitals, Schools, Stores, and Lobbies	25
Light Manufacturing	15
Heavy Manufacturing	12
Hot, Heavy Manufacturing	10

Note: The table above is in accordance with ARI Drinking Water Cooler Application Standard 1020.

*Air Conditioning and Refrigeration Institute Standard Rating Condition 80°F inlet water temperature.

Bubbler Valve: Built-in pressure regulator assures a smooth, steady flow at line pressures from 20 to 125 psi. All metal parts are either stainless steel or brass.

Electronic Bubbler Valve Control: Membrane switch activates an electronic solid-state circuit control.

One-Piece Top and Receptor: Satin finish Type 304 stainless steel. Effective anti-splash ridge with easy-to-clean integral strainer.

Cabinet: The separate unitized (welded) framework of heavy-gauge steel that provides rigidity is enamel coated for corrosion protection. Panels have standard finish of Sandstone vinyl laminated to steel. Optional colors available in vinyl and baked enamel on steel (see Color Selector Guide). Also available in stainless steel and Regency Bronze at extra cost.

Units feature removable front and side panels, are shipped with mounting bracket.

Tank and Cooling Coil: High-efficiency, tank-type cold water storage system reduces starts and operating time of compressor. Two metal walls between drinking water and refrigerant. All water carrying lines are constructed of copper tubing.

Cooling Tank Insulation: Removable, molded, expanded bead polystyrene.

Cold Water Thermostat: Adjustable thermostat controls cold water temperature.

Refrigeration Unit: Fan-cooled condenser. Internally spring mounted, hermetically sealed compressor with automatic overload protector. No lubrication needed. Refrigerant is controlled by accurately calibrated capillary tube.

Electrical: Furnished with 3-wire service cord and polarized plug.

Accessory Glass Filler: Factory installed. Push down (A550R), push back (A525R), push button (A500R).

Limited 5-Year Warranty (Continental limits of the United States and Canada): Five years on the sealed refrigeration system and most component parts. Detailed warranty certificate enclosed with each water cooler; sample copy available upon request.

Models covered by these specifications comply with all known Plumbing Codes. Listed by Underwriters' Laboratories, Certified by Canadian Standards Association, and Certified to Air Conditioning and Refrigeration Institute.

EXPORT

Special Export Models: Models OEP8WM-AE-50 and OEP8WM-50 are operable on 220-240 volts, 50 Hertz without transformers UL, CSA and ARI not applicable.

Warranty: One year on the sealed refrigeration system and most component parts. Four-year replacement contract on sealed refrigeration system. Detailed warranty certificate enclosed with each water cooler; sample copy available upon request.

G-1750 — Wall Mounted Eye/Face Wash with Stainless Steel Bowl and Stay-Open Valve.

G-1751 — Same as G-1750 except with Self-Closing Valve.

Receptor: 11½" stainless steel bowl with forged brass waste fitting and aluminum wall bracket.

Outlet Assembly: Two fine spray outlet heads, each with a self-regulating volume control, removable Delrin spray cover and reticulated polyurethane filter to remove particles from the water.

Valve: ½" IPS full flow ball valve operated by flag handle. Eye/face wash operates until valve is manually closed.

Inlet: ½" IPS female.

Outlet: 1¼" IPS female.

Available Options:

* Stainless steel protective covers for outlet heads (add suffix "-1334"). Water flow swings the hinged cover away from outlet head.
* Corrosion-resistant vinyl coating (add suffix "-VC").
* Hand-held eye, face and body spray attachment (add suffix "-5014-GS"). Furnished with tee for attaching to eye/face wash inlet, self-closing valve operated by squeeze handle and 6 ft. high pressure hose.

GUARDIAN EQUIPMENT

CHICAGO

P.9

G-1750 PANEL MOUNTED EMERGENCY EYE/FACE WASH WITH STAINLESS STEEL BOWL, TWO FINE SPRAY OUTLET HEADS AND STAY-OPEN BALL VALVE.

G-1751 SAME AS ABOVE EXCEPT WITH SELF-CLOSING VALVE.

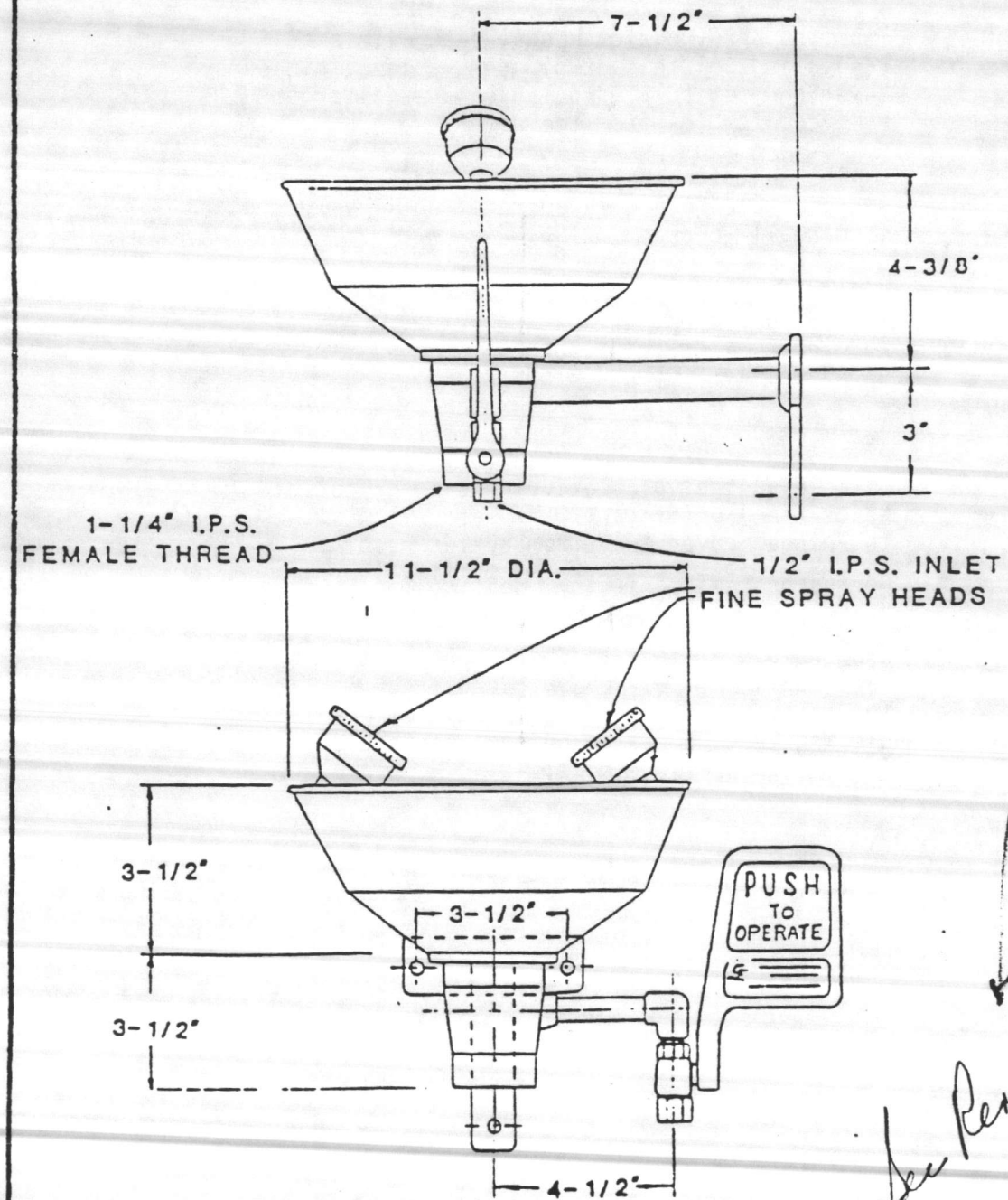

See Reverse Side

MEASUREMENTS MAY VARY 1/4 INCH (PLUS OR MINUS)

FILE NUMBER 40582BF	PLATE NUMBER G-1750	DRAWING NUMBER B-2050-A

VERTICAL HEATE

445 Actual / 445 No[illegible] Gallon STORAGE

MIL-T-12295-E: TANKS, HW STORAGE
TYPE II (Cement) CLASS 3 (ASME 125) STYLE B (Vertical)
MIL-H-12322 C: Heaters, water, steam, hw Heaters
CLASS 1 (steam)
*: NOTE: ALL Nozzles FEM IPS SIZE, NON-FERROUS or COPPER SILICONE

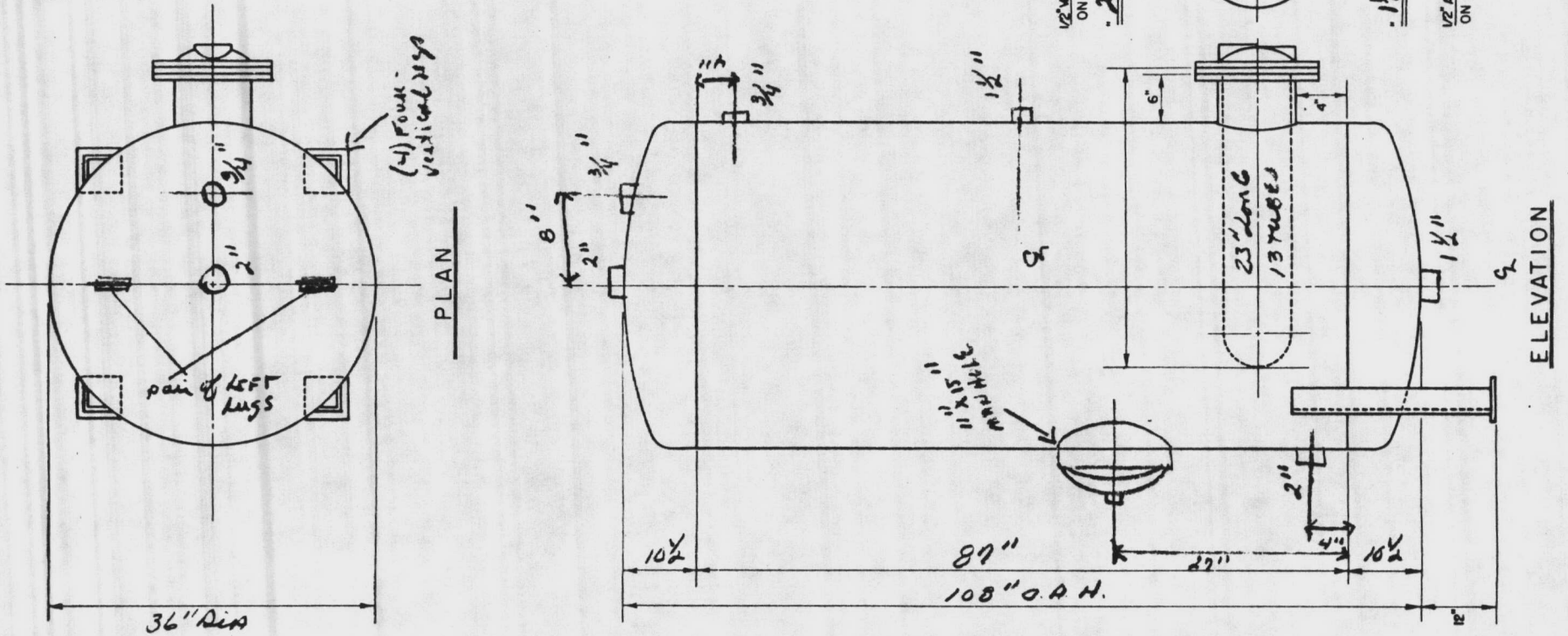

P-10

1. NUMBER REQUIRED (1) one
2. DESIGN PRESSURE 125 P.S.I. TEST PRESSURE 187.5 P.S.I.
3. CONSTRUCTION ASME CONSTRUCTED AND STAMPED
4. MATERIAL BLACK CARBON STEEL PLATE
5. PAINT STEEL TANK EXTERIOR ONE COAT METAL PRIMER RED CHROMATE PRIMER
6. INTERIOR LINING Cement
7. WEIGHT EACH #1397

1. ELEMENT U-6-8.9 [3/4 O.D. # 18 BWG] SEAMLESS COPPER TUBES
2. HEATING SURFACE 8.7 SQ. FT. HEATING CAPACITY 436 G.P.H.
3. TEMPERATURE RANGE 40 °F TO 140 °F
4. HEATING MEDIUM 10 PSIG
5. WITH Copper CAST TUBE SHEET AND Copper Silicone parts

ENGINEER DEPT OF NAVY

RECO RICHMOND ENGINEERING CO.
Richmond, Virginia

VERTICAL STORAGE HEATER

CUSTOMER Noland Co., Inc P.O. NO. 2601-E-E5416
JOB Applied Instruction Bldg. Camp Lejeune, NC.
REPRESENTATIVE Dozier & Sa Sales CITY Charlotte, NC.

JOB NO. _____ DRAWN BY CGT
DATE 12/8/86 APP'D BY _____

DRAWING NO

REV: REV:

C-59-399

TAB PLACEMENT HERE

DESCRIPTION:

5

☐ Tab page did not contain hand written information

☒ Tab page contained hand written information
*Scanned as next image

Confidential Records Management, Inc.
New Bern, NC
1-888-622-4425
9/08

CHAMPION OWNERS GUIDE

TWO STAGE/FOUR CYLINDER AIR COMPRESSORS

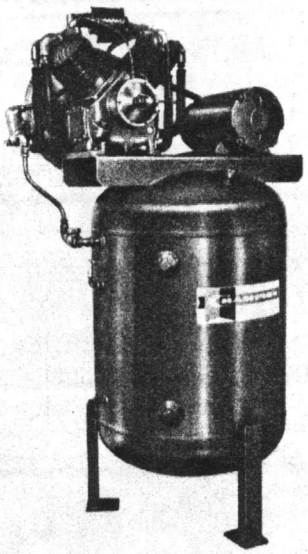

VR10-12

VERTICAL UNITS

HORIZONTAL UNITS

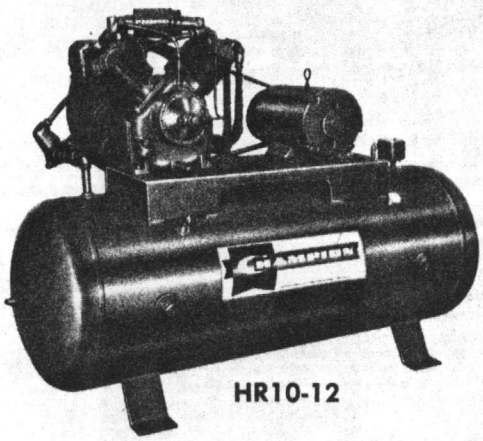

HR10-12

BASE MOUNTED UNITS

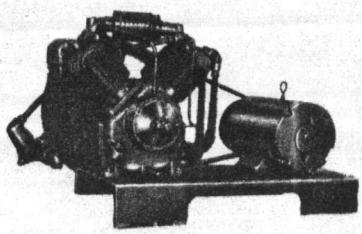

TYPE AND MODEL NUMBER — ELECTRIC DRIVEN WITH MODEL R-30B PUMP

HORIZONTAL UNITS			
Model HR7-8	Model HR10-8		
Model HR7-12	Model HR10-12		
VERTICAL UNITS		**BASE MOUNTED UNITS**	
Model VR7-12	Model VR10-12	Model BR7	Model BR10

CHAMPION PNEUMATIC MACHINERY CO., INC.

1301 N. Euclid Ave. • Princeton, Illinois 61356-9990 • (815) 875-3321 • TLX 404471 • Cable: "CHAMP PNE PCTN"

Manufacturing Plants in Princeton, Illinois • Montgomery, Alabama • Manteca, California

COMPLETE NATION-WIDE ORGANIZATION OF CHAMPION REPRESENTATIVES AT YOUR SERVICE

AN EQUAL OPPORTUNITY EMPLOYER

Form No. 476-3137 Rev. 886

SPECIFICATIONS

COMPONENT IDENTIFICATION

1. Electric Motor
2. Motor Pulley
3. V-Belt
4. Compressor Pump (Model R-30B)
5. Air Receiver (Tank)

Following are common to all units:

6. Pressure Switch P/N M-1227
7. Globe Valve P/N M-524
8. Check Valve P/N P-5822A
9. Pressure Gauge M-519C
10. Safety Valve P/N Z-206-200
11. Drain Cock P/N M-521
12. Tank Drain Z-1542 Horizontal Tank
    Z-1541 Vertical Tank

*Items 6 thru 10 optional with Base Mounted Units.

Belt Guard (not shown) Z-650
(all R-30B Electric Driven Units)

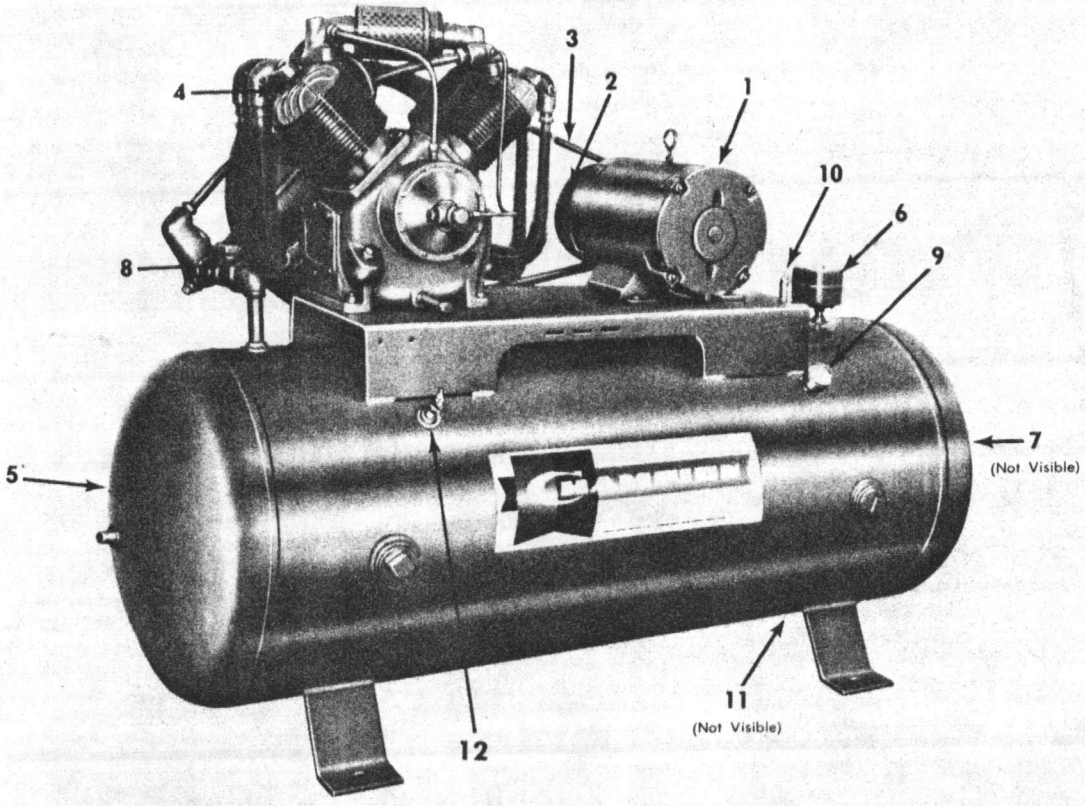

Model	1. Motor H.P.	2. Pulley	3. V-Belt	5. Air Tank	9. Gauge
HR-7-8	7½	M-7011D	B-81 (2)	P-1400D	M-519C
HR-7-12	7½	M-7011D	B-81 (2)	P-1596D	M-519C
HR-10-8	10	M-2076	B-83 (2)	P-1400D	M-519C
HR-10-12	10	M-2076	B-83 (2)	P-1596D	M-519C
VR-7-12	7½	M-7011D	B-81 (2)	P-2212D	M-519C
VR-10-12	10	M-2076	B-83 (2)	P-2212D	M-519C
BR-7	7½	M-7011D	B-81 (2)	P-3970C Baseplate	
BR-10	10	M-2076	B-83 (2)	P-3970C Baseplate	

Compressor Pump Model R-30B

TROUBLE SHOOTING CHECK LIST

SERVICE PROBLEM

A	Motor or Engine will not Start
B	Motor or Engine is Noisy or Overheats
C	Motor or Engine Stops
D	Compressor Runs Hot
E	Compressor Pumps Too Slowly
F	Compressor Won't Shut Off
G	Noisy Check Valve
H	Excessive Belt Wear
I	Abnormal Pressure Fluctuation
J	Air Escapes From Unloaden Muffler When Running
K	Air Escapes From Unloader Muffler When Stopped
L	Safety Valve in Subbase Pops Off Continuously
M	Compressor Cycles (runs) too Often
N	Starter Kicks Out

POSSIBLE CAUSE OF PROBLEM

			N	M	L	K	J	I	H	G	F	E	D	C	B	A	
E	1	Check Main Switch and Fuses												●		●	1
E	2	Check Magnetic Starter Heater Coils												●		●	2
E	3	Reset Magnetic Starter												●		●	3
E	4	Check Points in Pressure Switch									●			●		●	4
E	5	Check Diaphragm in Pressure Switch		●							●			●		●	5
E	6	Check for Low Voltage	●											●	●		6
E	7	Lubricate Motor													●		7
	8	Drain Water From Air Receiver		●													8
	9	Clean Aftercooler; Cylinder and Intercooler												●			9
	10	Check "V" Belts for Proper Tension							●			●	●		●		10
	11	Check for Proper Flywheel Rotation											●				11
	12	Check Compressor Pump Valves			●							●	●		●		12
	13	Check Pipe Lines for Leaks		●				●			●	●					13
	14	Check Adjustment of Unloader Valve		●				●			●						14
	15	Check Unloader Valve For Leaks		●				●			●	●					15
	16	Centrifugal Unloader Valve is Leaking		●			●	●			●	●					16
	17	Check Valve is Leaking		●		●											17
	18	Check Valve is Worn								●							18
	19	Check Valve or Line to Tank is Plugged			●			●									19
	20	Align Belts							●								20
	21	Clean Intake Muffler										●	●				21
	22	Check Crankcase Oil Level											●	●	●		22
	23	Clean Oil Bath Air Cleaner											●				23
G	24	No Fuel In Tank or Shut-off Valve Closed												●		●	24
G	25	Water, Dirt in Gasoline												●		●	25
G	26	Faulty Ignition Cable or Spark Plug												●		●	26
G	27	Spark Timing Wrong												●	●	●	27
G	28	Carburetor Incorrectly Adjusted													●	●	28
G	29	Remove Carbon From Engine												●	●	●	29
			N	M	L	K	J	I	H	G	F	E	D	C	B	A	

E = Electric Motor Driven Unit (Items 1-23)

G = Gasoline Engine Driven Units (Items 8-29)

FOR EXPLANATION SEE REVERSE SIDE

SPECIFICATIONS

COMPONENT IDENTIFICATION

1. Electric Motor
2. Motor Pulley
3. V-Belt
4. Compressor Pump (Model R-30B)
5. Air Receiver (Tank)

Following are common to all units:

6. Pressure Switch P/N M-1227
7. Globe Valve P/N M-524
8. Check Valve P/N P-5822A
9. Pressure Gauge M-519C
10. Safety Valve P/N Z-206-200
11. Drain Cock P/N M-521
12. Tank Drain Z-1542 Horizontal Tank
    Z-1541 Vertical Tank

*Items 6 thru 10 optional with Base Mounted Units.

Belt Guard (not shown) Z-650
(all R-30B Electric Driven Units)

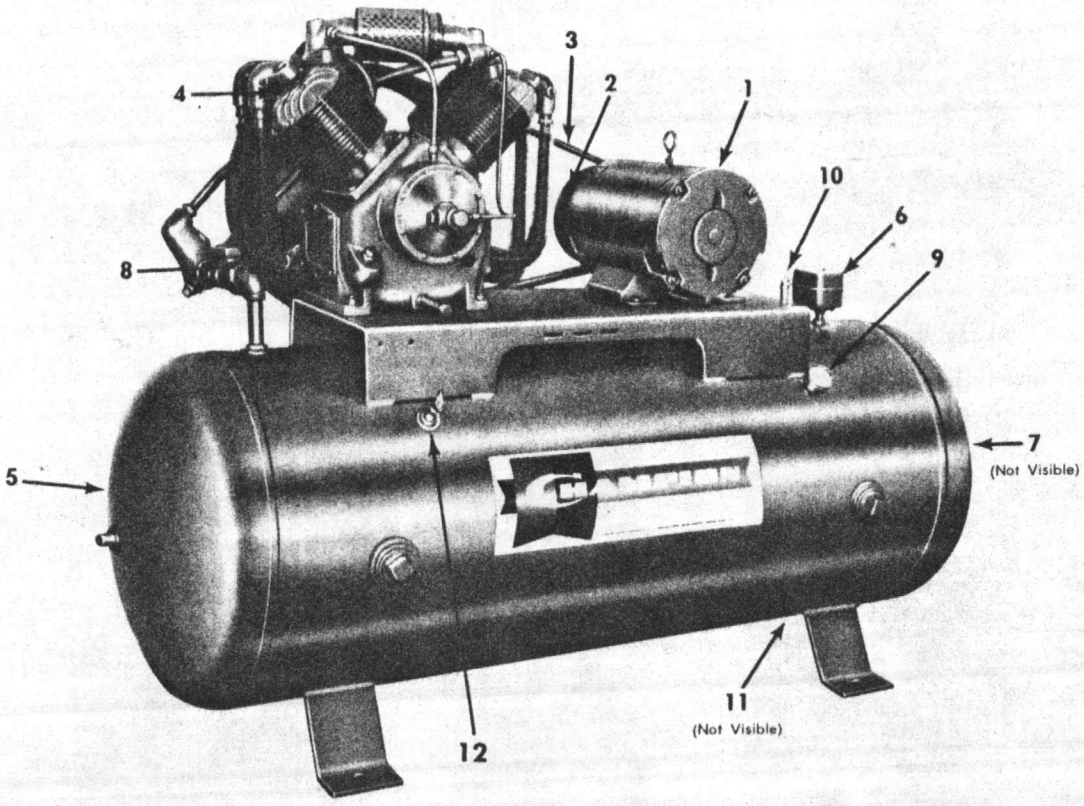

Model	1. Motor H.P.	2. Pulley	3. V-Belt	5. Air Tank	9. Gauge
HR-7-8	7½	M-7011D	B-81 (2)	P-1400D	M-519C
HR-7-12	7½	M-7011D	B-81 (2)	P-1596D	M-519C
HR-10-8	10	M-2076	B-83 (2)	P-1400D	M-519C
HR-10-12	10	M-2076	B-83 (2)	P-1596D	M-519C
VR-7-12	7½	M-7011D	B-81 (2)	P-2212D	M-519C
VR-10-12	10	M-2076	B-83 (2)	P-2212D	M-519C
BR-7	7½	M-7011D	B-81 (2)	P-3970C Baseplate	
BR-10	10	M-2076	B-83 (2)	P-3970C Baseplate	

Compressor Pump Model R-30B

EXPLANATION OF CHECK LIST

1. & 2. Check all fuses and switches on lines to motor to be sure it is receiving power. Check for broken wire.

3. A magnetic starter embodies a reset button which may be used to place the motor back in service after some unusual power conditions.

4. & 5. A pressure switch uses a diaphragm to open and close a set of points. Points may become pitted or dirty thru use. Clean by "touching" up with sandpaper or replace. See instructions in pressure switch cover. Disconnect unit from power source before servicing pressure switch.

6. Low voltage is prime cause of motor trouble. Ask your power company to test for low voltage.

7. Most electric motors are of the sealed bearing type. Check motor manufacturer's recommendation.

8. Water in the form of vapor is compressed along with incoming air and condenses in tank. Tank must be drained periodically so that full storage capacity of tank may be used. To drain, open pet cock on end of horizontal tank or on side of vertical tank. This is unnecessary if compressor is equipped with automatic tank drain.

9. The fins on the cylinder and tubing should be free of dirt which acts as an insulation. This is easily done by periodically blowing them clean or thru the use of a wire bristle brush.

10. "V" belts must be tight enough to transmit the necessary power to the compressor. If too tight they will overload the motor. If, by pushing down on one belt, its top lines up with the bottom of the belt next to it the tension is correct. Should it be necessary to change the tension, disconnect unit from power source and slide the motor in slots provided in tank baseplate to desired position.

11. The fan blade flywheel must rotate in the direction shown by the arrows.

12. Compressor valves may become fouled by carbon or other foreign matter. To service, disconnect unit from power source and remove manifold and extract valve. Remove screw in center of valve and clean all parts. Seat and disc may be lapped in on fine sandpaper if badly carboned. If a smooth finish cannot be obtained, replace with new parts. Reassemble and install, taking caution that all parts are returned to their original position with screw head up.

13. All air lines from compressor to tank and from tank to air operated devices should be tight. A soap solution will show bubbles when put on a leaky joint. At 175 PSI a 1/32" hole will allow almost 3 cubic feet per minute to escape.

14. The unloader valve has one adjustment which controls cutout pressure. Unload pressure is regulated by piston rod nut tension.

15. Check unloader valve for loose connections.

16. The centrifugal unloader valve may become fouled by foreign matter. To clean, disconnect unit from power source and unscrew hex cap on end of unloader, remove spring and ball, to remove ball rock flywheel. Clean and replace. Should ball not be seating properly in body it may be tapped lightly to form a better seat in soft brass body.

17. & 18. Before servicing check valve be sure pressure in tank is ZERO and power is disconnected. Remove check valve cap and extract disc. Disc should be clean and free from scratches. It may be lapped in on fine sandpaper or merely turned over to other side or replaced.

19. Badly worn compressors which are pumping oil may deposit carbon within after-cooler tube and check valve, restricting flow of air and possibly plugging these parts completely. These parts should be cleaned or replaced.

20. Motor pulley and flywheel must be in line to prevent wear on sides of belts. If misaligned, disconnect unit from power source, move pulley in or out by loosening set screw on key and tapping pulley in appropriate direction.

21. Intake muffler should be cleaned periodically to allow unrestricted flow of entering air. To service muffler, remove from manifold by loosening set screw on side of manifold, disassemble muffler by removing bolt passing from end to end, clean element, dry thoroughly and replace in manifold.

22. Cool running and long life can be assured by careful attention to crankcase oil. Check frequently and change as indicated on compressor data sheet.

23. Intake muffler should be cleaned periodically to allow unrestricted flow of entering air. To service muffler, remove from manifold, disassemble muffler, clean element, dry thouroughly, and read instructions on filter.

WARNING: Disconnect unit from power source before performing any maintenance. Never operate compressor with belt guard removed. Failure to adhere to these warnings may result in equipment damage or personal injury.

OWNERS GUIDE

AIR COMPRESSORS

TWO STAGE/FOUR CYLINDER AIR COMPRESSORS

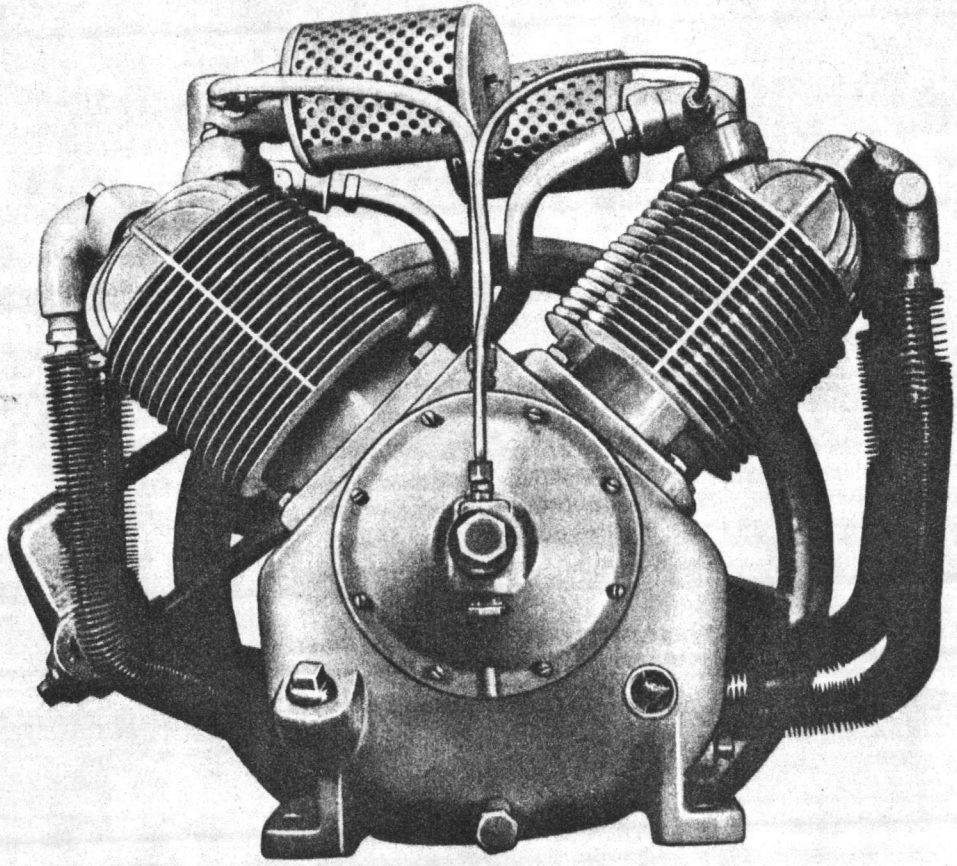

MODEL R-30A COMPRESSOR PUMP

AIR COMPRESSORS FOR HOME — COMMERCIAL AND INDUSTRIAL APPLICATIONS

Form No. 272-3086 Rev. 785

INSTALLATION AND OPERATING INSTRUCTIONS

Your new Air Compressor is constructed to exacting standards of materials and workmanship. Following the instructions below will provide trouble-free operation and long service life.

LOCATION AND MOUNTING

1. Portable air compressors of course can be located anywhere, however, if possible use **only in clean, cool, dry place.** Permanently installed **compressors must be located in a clean, well ventilated dry room so compressor receives adequate supply of fresh, clean, cool, and dry air.** It is further recommended that a compressor, used for painting, be located in a separate room from that area wherein body sanding and painting is done. Abrasive particles or paint, found to have clogged the air intake filters and intake valves, shall automatically void warranty.
2. Compressors should never be located so close to a wall or other obstruction that flow of air through the fan bladed flywheel, which cools the compressor, is impeded. **Permanently mounted units should have flywheel at least 12" from wall.**
3. Place portable or stationary compressors on firm level ground or flooring. **Permanent installations seldom require bolting to floor**, however, bolt holes in tank or base feet are provided. Before bolting or lagging down, **shim compressor level. Avoid putting a stress on a tank foot by pulling it down to floor**. This will only result in abnormal vibration, and possible cracking of Air Receiver. Suggest leave unit on shipping skid. As an alternative, install unit on vibro-isolator pads. Tanks bolted directly to a concrete floor without padding will not be warranted against cracking.

WIRING

1. **CAUTION:** Be sure electric service matches compressor specifications.
2. Compressor is pre-wired at factory. It is necessary only to bring lines from external power source to motor control device mounted on compressor, and attach to terminals as indicated on schematic diagram located inside cover of control. **Be sure that power circuit and voltage corresponds with the specifications.**
3. Connections should always be made by a qualified electrician.

LUBRICATION

1. **Tank or base mounted compressors are shipped with special break-in oil in crankcase.** Compressors not mounted (pump only) are shipped without oil in crankcase. Before operating compressor, fill crankcase with a high quality grade of non-detergent industrial oil containing rust and oxidation inhibitors. (Tank or base mounted compressors are shipped with this type of oil in the crankcase; simple pumps are shipped dry.) For temperatures above 32° F use the equivalent of SAE 30 viscosity oil; and in temperatures below 32° F use the the equivalent of SAE 20 viscosity oil.

   An acceptable alternative would be a high quality grade of straight weight motor oil, using the viscosity weights mentioned above.

   CAUTION: Do not mix oil types, weights, or brands. Synthetic lubricants are not recommended in any Champion Compressor.

   CAUTION: During break-in, careful and regular check of oil level should be exercised. Maintain oil level at full line.
2. Fill engine crankcase, if gasoline engine operated, in accordance with engine manufacturers recommendations found in engine manual.
3. Electric motors are equipped with sealed for life bearings and require no additional lubrication.

CARE AND MAINTENANCE

WARNING: DISCONNECT UNIT FROM POWER SOURCE BEFORE PERFORMING ANY MAINTENANCE. FAILURE TO DO SO MAY RESULT IN MACHINERY DAMAGE OR PERSONAL INJURY.

DAILY CARE

1. **Check oil level of both compressor and engine if so equipped.** Add quality lubricating oil as required. See paragraphs 1 & 2 under lubrication above.
2. **Drain moisture** from tank by opening tank drain cock located in bottom of tank.
3. Turn off compressor at the end of each day's operation. Shut off air supply by closing globe valve. Turn off power supply at wall switch.

EVERY 90 DAYS OR 500 HOURS

1. **Change crankcase oil.** Use type and grade oil as specified in paragraph 1 & 2 under lubrication.
2. **Check entire system** for air leakage around fittings, connections, and gaskets, using soap solution and brush.
3. **Tighten nuts and capscrews as required.**
4. **Check and clean compressor valves**, replace springs, discs, and seats when worn or damaged.

   CAUTION: Valves must be replaced in original positions. Valve gaskets should be replaced each time valves are serviced.

   ELECTRIC MOTOR OR GAS ENGINE: For service refer to separate manual or chart attached to equipment.

SAFETY VALVE: The safety valve is an automatic pop valve. Each valve is properly adjusted for the maximum pressure permitted by tank specifications and working pressure of the unit on which it is installed. If it should pop, it will be necessary to drain all the air out of the tank in order to reseat properly. Do not readjust.

TANK DRAIN VALVE: Drain valve is located at end of tank. Open drain valve at least once a week or oftener to drain condensation. The automatic tank drain equipped compressor makes this unnecessary.

PRESSURE SWITCH: The pressure switch is automatic and will start compressor at the low pressure and stop when the maximum pressure is reached. It is adjusted to start and stop compressor at the proper pressure for the unit on which it is installed. Do not readjust.

BELTS: Drive belts must be kept tight enough to prevent slipping. If belts slip or squeak, disconnect unit from power source and loosen the four nuts which hold the motor and slide back on base, then tighten the four nuts. **CAUTION:** If belts are too tight, overload will be put on motor and motor bearings.

COMPRESSOR VALVES: If compressor fails to pump air or seems slow in filling up tank, disconnect unit from power source, remove valves and seats and clean thoroughly. After cleaning exceptional care must be taken that all parts are replaced in exactly the same position and all joints must be tight or the compressor will not function properly. When all valves are replaced and connections tight, close globe valve at tank outlet for final test.

CENTRIFUGAL UNLOADER AND PRESSURE RELEASE VALVE: The centrifugal unloader is operated by two governor weights. It is totally enclosed and lubricated from the crankcase of the compressor. When compressor starts the governor weights automatically open compressing the main spring, allowing the release valve to close. When the compressor stops, the main spring returns the governor weights to normal position opening the release valve and unloading the compressor. This prevents overloading the motor when starting. If air continues to escape through the governor or pressure release valve while operating this is an indication that the release valve is not closing tightly and may be held open by foreign substance which has lodged on the seat. In order to correct this, remove governor release valve cap, giving access to release valve spring and ball. Clean thoroughly and return parts in the same order in which they were removed.

CHECK VALVE: The check valve closes when the compressor stops operating, preventing air from flowing out of the tank through the pressure release valve. After the compressor stops operating, if air continues to escape through the release valve it is an indication that the check valve is leaking. This can be corrected by removing check valve cap and cleaning disc and seat. If check valve disc is worn badly, replace same. **CAUTION:** Before opening check valve be sure all air is drained out of tank and power is disconnected.

LUBRICATION OF COMPRESSOR: Fill crankcase to proper level as indicated by oil gauge. Keep crankcase filled as required by usage.

THE INTERSTAGE SAFETY VALVE is provided to protect against interstage overpressure, and is factory set for a maximum pressure of 75 P.S.I.

DO NOT RESET

If the safety valve pops, it indicates trouble. Shut down the unit immediately and determine and correct the malfunction. Inspect the head valves. Serious damage can result if not corrected, and can lead to complete destruction of the unit. Tampering with the interstage safety valve, or plugging the opening destroys the protection provided and voids all warranty. **CAUTION:** Normal maintenance requires 90 day inspection and cleaning of head valves. This includes the safety valve.

MODEL R-30A COMPRESSOR PUMP

DIMENSIONS

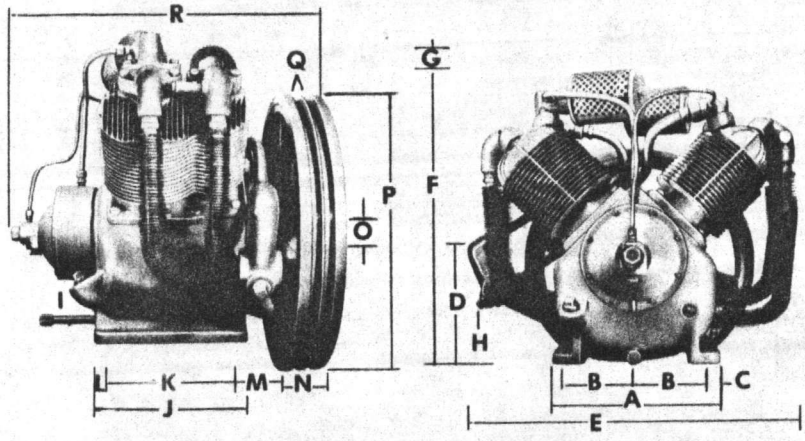

A	Base - Width	11-1/8
B	Bolt Down - Width	4-13/16
C	Bolt Down To Edge	¾
D	Base To Crank Ctr	7
E	Overall Width	24
F	Overall Height	20½
G	Add For Head Unloaders	1
H	HP Exhaust At Opening	¾ NPT
I	Bolt Down Hole Dia	17/32
J	Base - Depth	9¾
K	Bolt Down - Depth	8-1/16
L	Bolt Down To Edge	27/32
M	Bolt Down To Wheel (Max)	3-1/16
N	Flywheel Width	2-23/32
O	Crank Diameter	1¾
P	Flywheel Diameter	19¼
Q	Flywheel Grooves	2VB
R	Overall Depth	21-1/8

Flywheel Rotation; Clockwise When Viewed From Front - Flywheel To Rear

SPECIFICATIONS

BORE & STROKE	NO. CYLS.	CU. FT./REV.	OIL CAPY.	WT.	MAX. PRESS.	MIN. PRESS.
4-5/8 (2) & 2½ (2)x3	4	.05828	4 Qt.	248	175 PSI	10 PSI

PERFORMANCE

OUTPUT PRESS.	MOTOR HP	DISPL. CFM	DEL'Y. CFM	PUMP RPM	APPROX. PULLEY O.D.
175	7½	33.50	26.20	575	7—2VB
PSI	10	42.60	34.10	730	8-1/2—2VB

All data based on 1800 R.P.M. electric motors as a power source.

TO DETERMINE PULLEY SIZE: Select a compressor which will deliver the required CFM at the desired pressure. Note the speed (RPM) compressor must run at to meet above requirements and the flywheel diameter of compressor. Determine RPM, shaft and keyway size of motor or engine. To determine pulley diameter, use this formula:

$$\text{Pulley Dia. (approx.)} = \frac{\text{Pump RPM x Flywheel Dia.}}{\text{Motor or Engine RPM}}$$

R-30A CRANKCASE, SUBBASE, CYLINDERS & CENTRIFUGAL UNLOADER ASSEMBLY

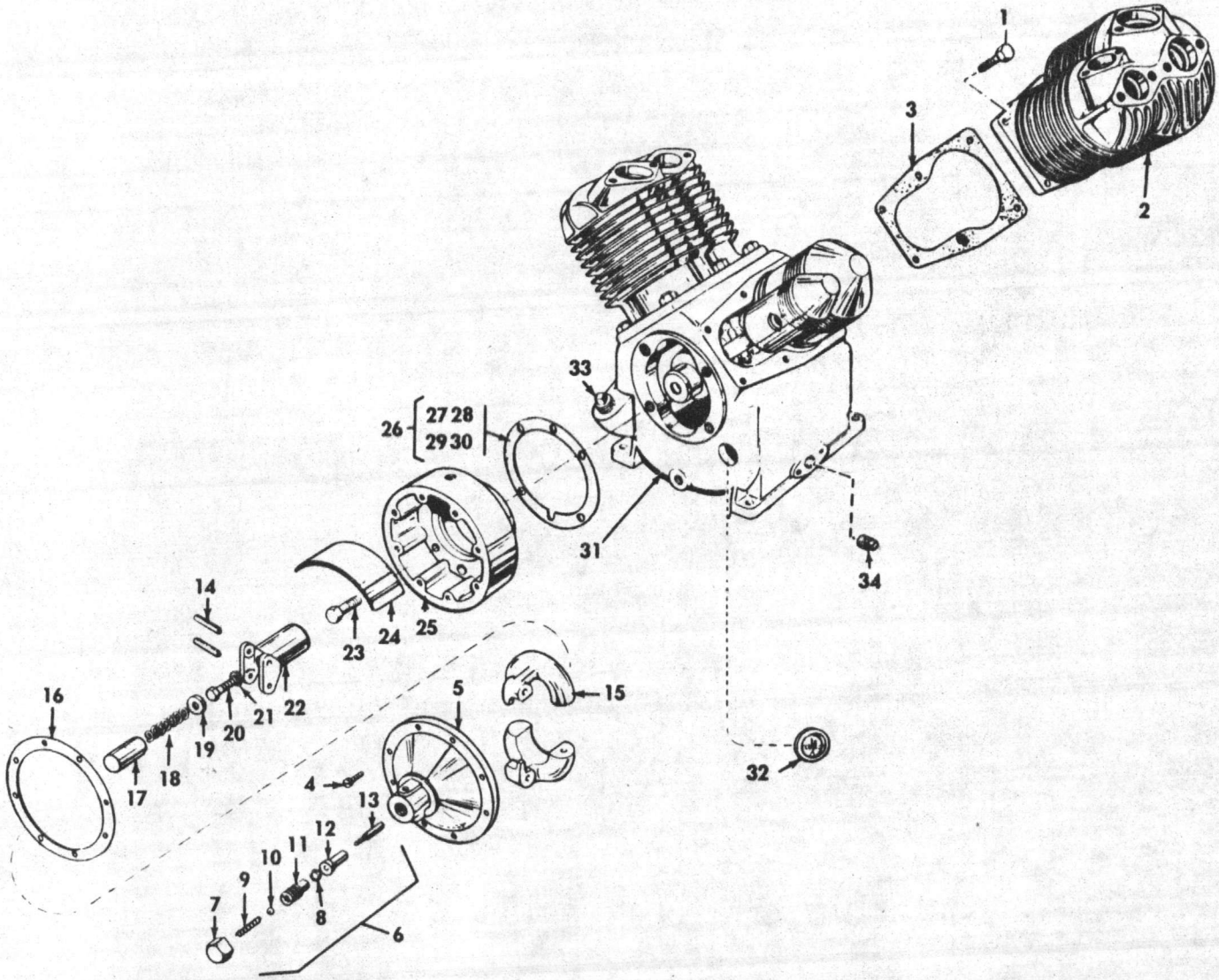

ITEM	PART NO.	NAME	REQ.
1	M-2345	Screw, Hex Steel Cap	12
2	NR-14-6A	Cylinder	2
3	NR-29-A	Gasket, Cylinder Flange	2
4	M-2400	Screw, Hex Head Mach.	8
5	SE-30-100	Cover, Gov. Housing	1
6	Z-124B	KIT, RELEASE VALVE ASS'Y. (Includes Items 7 thru 13	1
7	SE-5-85	Cap, Release Valve	1
8	H-122	Gasket, Release Valve Body	1
9	SE-5-91	Spring, Release Valve	1
10	SE-5-95	Ball, Release Valve	1
11	SE-30-101	Body, Release Valve	1
12	SE-5-97	Sleeve, Plunger	1
13	SE-5-86B	Plunger, Release Valve	1
14	SE-5-92A	Pin, Gov. Wt.	2
15	SE-5-82	Wt., Governor	2
16	SE-30-89	Gasket, Gov. Cover	1
17	SE-5-87	Sleeve, Spring	1
18	SE-5-90	Spring, Gov. Main	1

ITEM	PART NO.	NAME	REQ.
19	M-912A	Washer, Flat Steel	1
20	RE-14-94	Screw, Hex Steel Cap	1
21	M-466	Washer, Spring Lock	1
22	SE-5-83B	Spindle, Gov. Wt.	1
23	RE-20-106	Screw, Hex Steel Cap (Upper Gov. Housing)	4
24	NR-36-104	Plate, Gov. Baffle	1
25	NR-36-113	Housing, Gov.	1
26	Z-30-30	GASKET SET, GOV. HOUSING (Includes Items 27-28-29-30)	1
27	SE-30-30	Gasket, Gov. Housing 1/32 Thick)	1
28	SE-30-30A	Gasket, Gov. Housing .005 Thick)	1
29	SE-30-30B	Gasket, Gov. Housing .010 Thick)	1
30	SE-30-30C	Gasket, Gov. Housing .015 Thick)	1
31	M-1898	Crankcase	1
32	RE-7-14	Gauge, Visible Oil Sight	1
33	M-459	Plug, Pipe (Oil Filler)	1
34	M-484	Plug, Pipe	1
35	Z-765	GASKET SET, COMPLETE PUMP	1

NOTE: NSS means Not Sold Separately.

R-30A CRANKSHAFT, RODS, PISTONS, ETC.

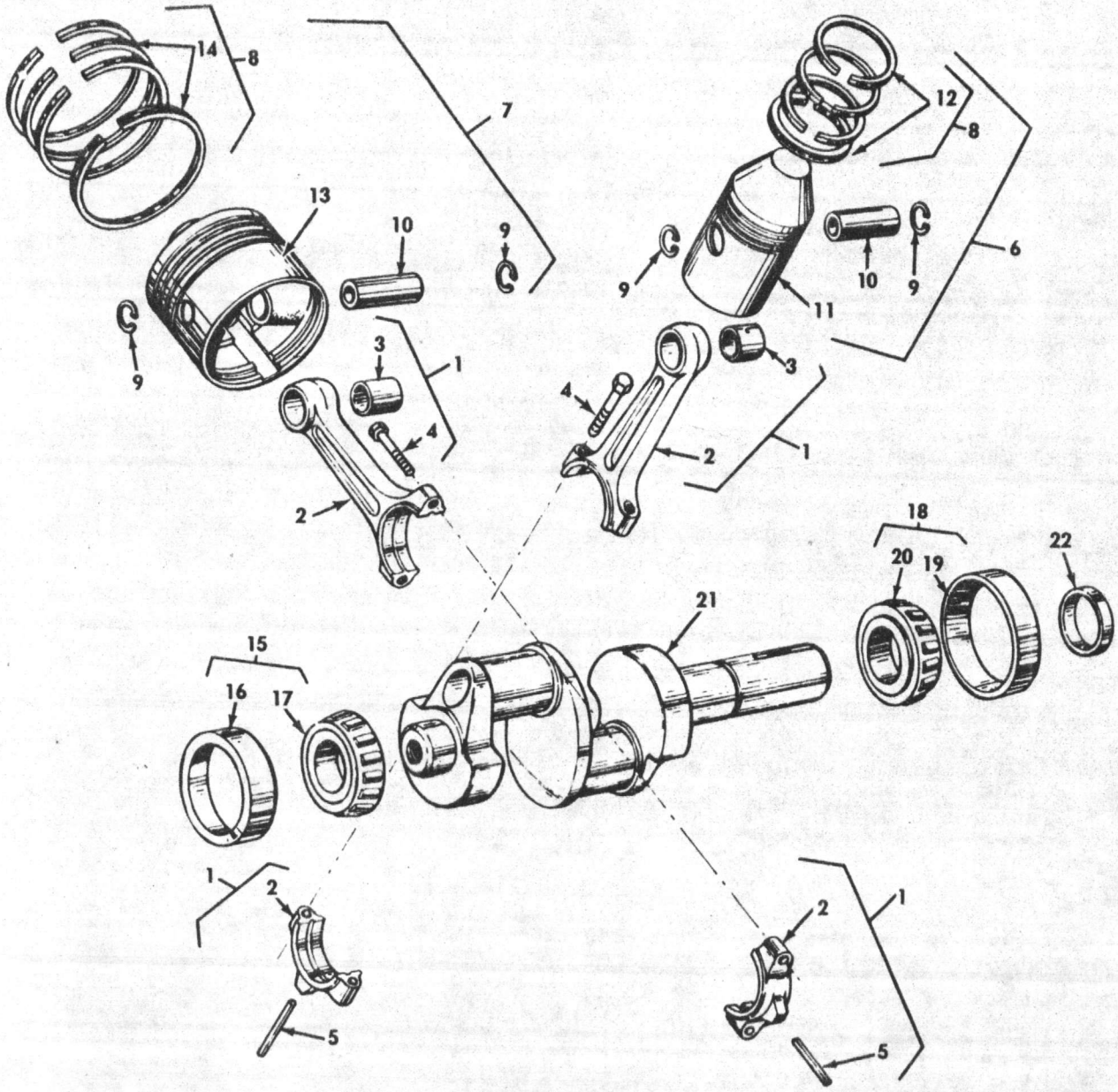

ITEM	PART NO.	NAME	REQ.
1	Z-752	KIT, ROD ASS'Y., CONNECTING (Includes 2-3-4-5)	4
3	R-10-37	Bearing, Piston Pin	4
4	M-1583	Bolt, Connecting Rod	8
5	R-10-24	Dipper, Oil	4
6	ZR-10-4	KIT, PISTON ASS'Y., H.P. (Includes Items 9-10-11-12)	2
7	ZR-15-4	KIT, PISTON ASS'Y., L.P. (Includes Items 9-10-13-14)	2
8	ZR-30	KIT, RING SET, COMPLETE PUMP	1
9	R-10-102	Ring, Piston Pin Retaining	8

ITEM	PART NO.	NAME	REQ.
10	R-10-21	Pin, Piston	4
11	R-10-4	Piston, High Pressure	2
12	Z-189B	Ring Set, High Pressure Piston	2
13	R-15-4	Piston, Low Pressure	2
14	Z-179C	Ring Set, Low Pressure Piston	2
15	ZNR-36-16	ASS'Y., MAIN BEARING (GOV. END) (Includes Items 16-17)	1
18	ZNR-20-16	Ass'y., Main Bearing (Flywheel End) (Includes Items 19-20)	1
21	R-30-5	Crankshaft	1
22	OS-N36A	Seal, Oil	1

R-30A VALVE ASSEMBLY, TUBING, ETC.

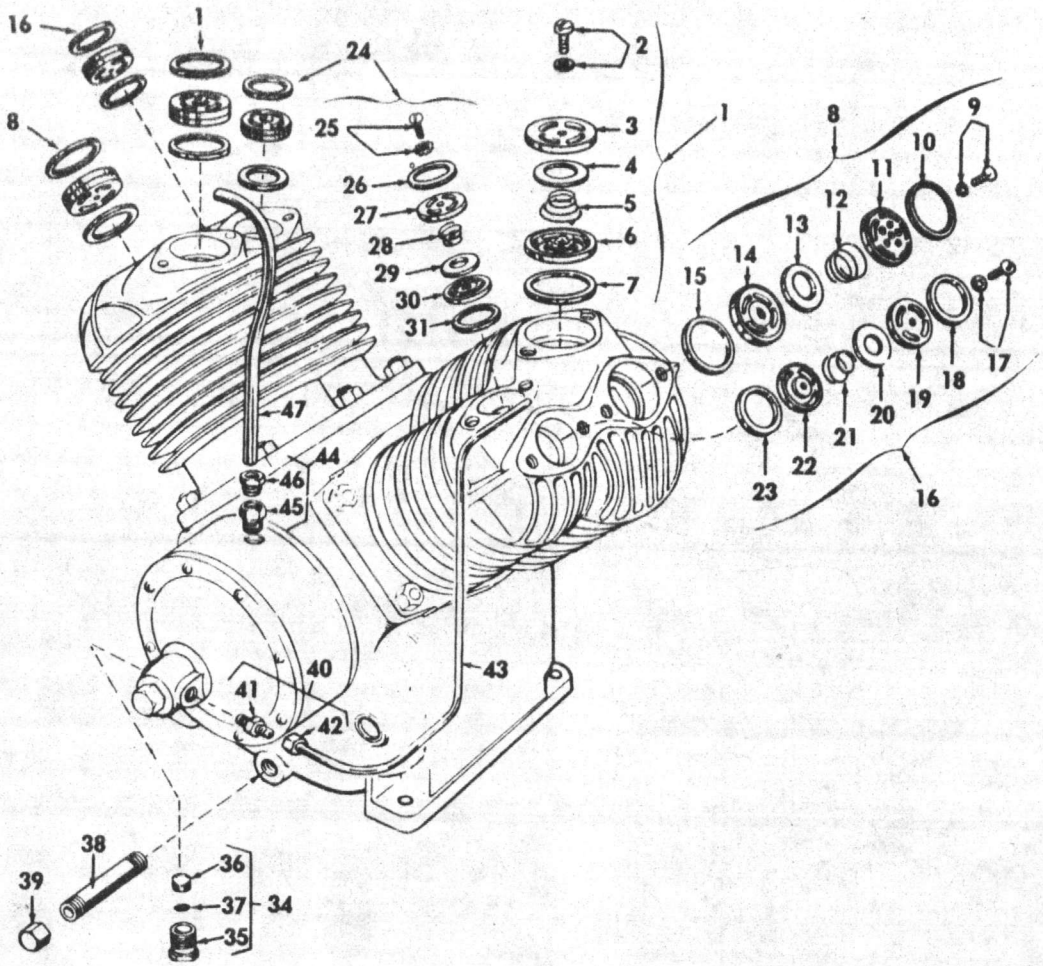

ITEM	PART NO.	NAME	REQ.
1	Z-812	VALVE ASS'Y., LOW PRESS. INTAKE (Includes Items 2-3-4-5-6-7)	2
2	P-4544A	Screw, Fillister Head Steel Machine w/Washer	2
3	RE-14-71	Seat, Intake Valve	2
4	RE-14-70	Disc, Valve	2
5	RE-14-58	Spring, Valve	2
6	M-2098	Cage, Intake Valve	2
7	P-4134A	Gasket, Valve	2
8	Z-813	VALVE ASS'Y., L.P. EXHAUST (Includes Items 9-10-11-12-13-14-15)	2
9	P-4543A	Screw, Fillister Hd., Steel Machine	2
10	P-4135A	Gasket, Valve	2
11	M-2099	Cage, Exhaust Valve	2
12	RE-10-59	Spring, Valve	2
13	RE-10-61	Disc, Valve	2
14	M-2097	Seat, Exhaust Valve	2
15	P-4135A	Gasket, Valve	2
16	Z-113	VALVE ASS'Y., H.P. INTAKE (Includes Items 17-18-19-20-21-22-23)	2
17	RE-7-81	Screw, Fillister Hd., Steel Machine	2
18	P-4137A	Gasket, Valve	2
19	RE-7-56A	Seat, Intake Valve	2
20	RE-10-62	Disc, Valve	2
21	RE-7-60	Spring, Valve	2
22	M-2101	Cage, Intake Valve	2
23	P-4136A	Gasket, Valve	2

ITEM	PART NO.	NAME	REQ.
24	Z-115	VALVE ASS'Y., H.P. EXHAUST (Includes Items 25-31)	2
25	RE-7-81	Screw, Fillister Hd., Steel Machine	2
26	P-4137A	Gasket, Valve	2
27	M-2100	Cage, Exhaust Valve	2
28	RE-7-60	Spring, Valve	2
29	RE-10-62	Disc, Valve	2
30	RE-7-57A	Seat, Exhaust Valve	2
31	P-4136A	Gasket, Valve	2
32	Z-104	KIT, COMPLETE VALVE SET w/Gaskets (Includes Items 1-8-16-24)	1
33	Z-104G	KIT, COMPLETE VALVE GASKET SET (Includes Items 7-10-15-18-23-26-31)	1
34	Z-60A	MUFFLER ASS'Y., UNLOADER (Inlcudes Items 35-36-37)	1
38	M-492	Pipe, Oil Drain	1
39	M-461	Cap, Oil Drain	1
40	Z-508	STRAIGHT COUPLING (Includes Items 41 & 42)	1
43	SB-250B	Tube, Release Valve	1
44	Z-509	STRAIGHT COUPLING (Includes Items 45 & 46)	1
47	UB-375B	Tube, Breather	1

R-30A MANIFOLD, TUBING, ETC., & FLYWHEEL

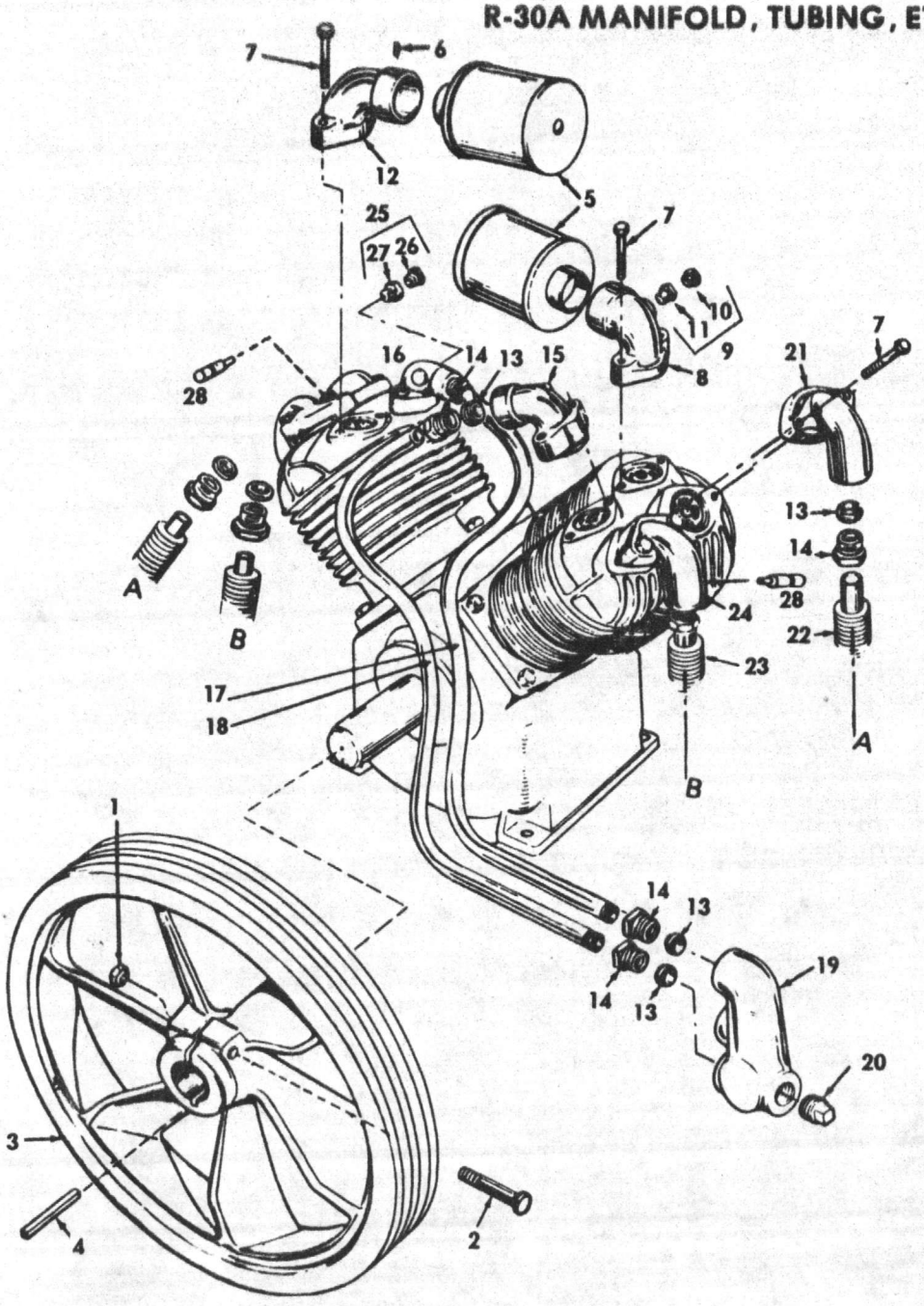

ITEM	PART NO.	NAME	REQ.
1	M-465	Nut, Hex Steel (Flywheel)	1
2	M-738	Cap Screw	1
3	NR-36-7B	Flywheel	1
4	RE-20-8	Key, Square Machine	1
5	Z-828	Muffler Ass'y., Intake	2
6	M-432	Screw, Slotted Set	2
7	P-5005	Screw, Hex Steel Cap (All Manifolds)	16
8	R-10B-2	Manifold, L.P. Intake (Left Bank)	1
9	Z-509	STRAIGHT COUPLING (BREATHER TUBE) (Includes Items 10-11)	1
12	R-10-B2	Manifold, L.P. Intake (Right Bank)	1
13	SE-5-42	Ferrule	12
14	SE-5-41	Nut, Compression	12
15	SE-5-2A	Manifold, Exhaust	1

ITEM	PART NO.	NAME	REQ.
16	SE-5-2B	Manifold, Exhaust (Release Valve Tube)	1
17	M-1591	Tube, Aftercooler (Right)	1
18	M-1592	Tube, Aftercooler (Left)	1
19	NR-36-44	Manifold, Aftercooler	1
20	M-459	Plug, Pipe (Aftercooler M'fld.)	1
21	RE-10-2E	Manifold Exhaust	2
22	M-1480	Tube, Intercooler w/Fittings	1
23	M-1481	Tube, Intercooler w/Fittings	1
24	NR-2B	Manifold, Intake	2
25	Z-441	STRAIGHT COUPLING (Includes Items 26-27)	1
28	Z-67-75	Safety Valve	2
	Z-837	Filter Element for Z-828	2

CONSTANT SPEED HEAD UNLOADER KIT HUK-502
FOR AIR COMPRESSOR PUMP MODEL R-30A

NOTE: This is optional equipment and may not be included on your unit.

The purpose of constant speed unloading is to provide a means of stopping or starting the compression of air by the compressor without stopping or starting the electric motor or gasoline engine after each cycle.

To accomplish this, an air pilot valve is used to replace the pressure switch used for stop-start operation. The pilot valve senses storage tank pressure, and when the pressure is raised to a predetermined setting, this air is released to an intake valve hold-open mechanism. The compressor stops compressing air and runs free until the pilot valve senses that the pressure in the tank has dropped to the predetermined setting. At this time the air is released from the intake valve hold-open mechanism, and the compressor starts compressing air again.

The parts called out below replace or are substituted for those found in the regular parts list of the Owner's Guide for this compressor.

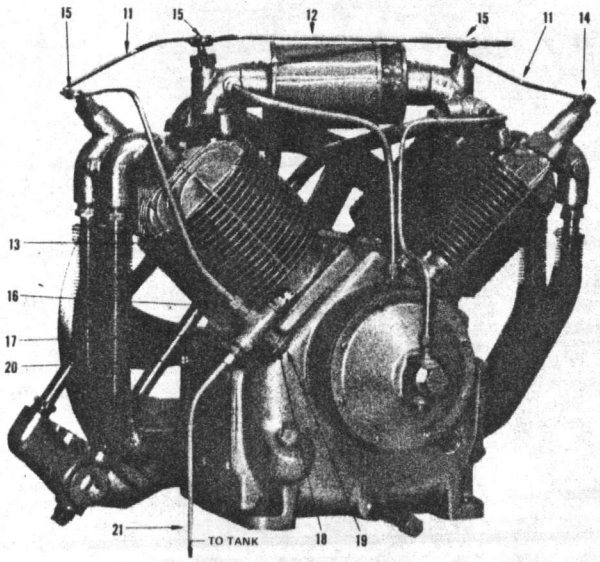

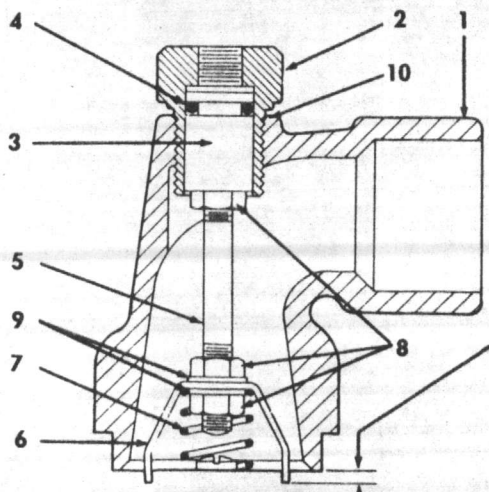

TYPICAL MANIFOLD ASSEMBLY

HUK-504

FIG. REF. NO.	PART NO.	NAME	TOTAL REQ'D.
1	P-2750A	LP Intake Manifold (Replaces R-10B-2)	2
	P-2357B	HP Intake Manifold (Replaces NR-2-B)	2
2	P-2306B	Cylinder	4
3	P-2287A	Piston	4
4	P-2547A	O-Ring	4
5	P-2286A	Piston Rod	4
6	P-2308B	Claw-LP	2
	P-2307A	Claw-HP	2
7	P-1882A	Spring	4
8	M-926A	Nut, Hex 1/4—28	12
9	M-919A	Lockwasher 1/4"	8
10	P-746A	Gasket-HP Only	2
11	M-666A	Manifold Tube	2
12	M-667A	Intermediate Tube	1
13	M-665A	Actuating Tube	1
14	Z-513	Compression Fitting 1/4"x1/8"x90°	1
15	Z-535	Compression Tee 1/4"x1/4"x1/8"	3
16	Z-508	Compression Fitting 1/4"x1/8"xSt	1
17	Z-180	Pilot Valve	1
18	M-807	Mounting Bracket	1
19	M-695	Cap Screw 3/8—16x3/4	1
20	Z-441	Compression Fitting 1/4"x1/4"xSt	1
21	——	Sensing Tube, 1/4" O.D., To Suit Installation	1

Z-596	L.P. Assembly (Items 2-9)
Z-597	H.P. Assembly (Items 2-10)

3/32"WHEN PISTON IS UP.

CAUTION — WHEN INSTALLING HEAD UNLOADER MANIFOLD ASSEMBLY, BE CERTAIN THAT THE ACUATING CLAW (#6) PROTRUDES 3/32" BELOW THE BOTTOM OF THE MANIFOLD (#1) AS SHOWN. CLAW MUST BE POSITIONED SO THAT IT WILL ENTER TWO SLOTS IN THE COMPRESSOR VALVE. FAILURE TO FOLLOW THIS PROCEDURE WILL RESULT IN AN INOPERATIVE HEAD UNLOADER.

OPERATION AND ADJUSTMENT OF PILOT VALVES

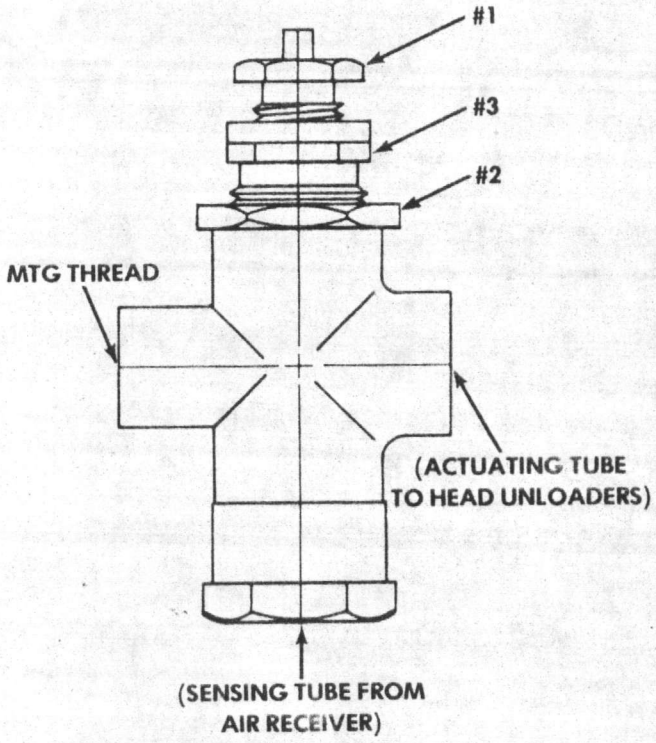

The Pilot Valve is designed to act as an automatic "on" and "off" air switch. When in the "on" position it allows air to flow from the tank thru the valve to some device such as a compressor head unloader mechanism, thus actuating it. In the "off" position this valve stops the flow of air thru the valve and releases the pressure in the line to the device.

The pilot Valve works as follows: Tank air pressure acts on the bottom of the valve. When pressure is great enough to overcome spring force holding valve down on lower seat, it lifts off seat and allows air to flow around valve and out through side opening in Pilot Valve. When valve lifts off lower seat it moves up and seats on upper seat where it is held by tank air pressure. When pressure in tank and on valve drops, spring forces valve back down on lower seat. Air in line to device being actuated can then escape through upper seat and out vent hole. The pressure at which the Pilot Valve is "on" or "off" is controlled by the spring which has been installed at the factory. A small adjustment can be made in the field by changing the spring force by compressing the spring more or less with the adjusting screw provided on the Pilot Valve.

PILOT VALVES

ASSEMBLY PART NO.	PRESSURE RANGE
Z-180B	80 - 100
Z-180A	120 - 140
Z-180	140 - 170

ADJUSTING PRESSURE

The unload pressure is adjusted by turning the pressure adjusting nut #1 clockwise to increase, and counter-clockwise to decrease, pressure.

Changing the differential (difference there is between load and unload pressure) is accomplished by holding the lock nut closest to the body of the valve #2 so it does not move, then turning the large nut #3 next to it very slightly clockwise to increase the differential, and counter-clockwise to decrease it.

RECORD OF MAINTENANCE SERVICE

WEEKLY CLEAN FILTER CLEAN COMPRESSOR TEST SAFETY VALVE						MONTHLY INSPECT AIR SYSTEM INSPECT OIL CHECK BELTS		EVERY 3 MONTHS CHANGE OIL INSPECT VALVE ASSEMBLY

GENERAL INSTALLATION INSTRUCTIONS

1. Compressor Location and Connection to Air Main

Locate in a clean well ventilated room. A cool location is advantageous due to increased efficiency of compressors.

Allow a minimum of 14" between compressor flywheel and wall. Allow room around compressor for maintenance and servicing.

Mount compressors on a solid floor, preferably concrete. It is not necessary to lag to floor. Mount level.

Connect compressor to air main or lines through a pipe union, and shut-off valve to allow removal of unit if required. See sketch below. Never connect multiple compressors directly together. Connect each compressor to air main individually.

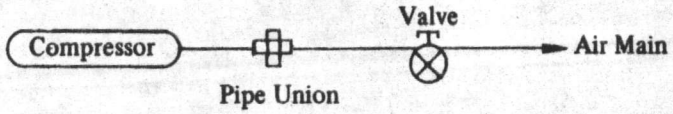

2. Pipe Sizes for Air Mains or Lines: "Table A"

Air mains and lines must be of adequate size and strength for the systems requirements. Either pipe or copper tubing may be used. Consult the factory for recommended sizes, or see Table "A" below.

Slope all air lines toward compressor receiver tanks. This will help prevent moisture in branch lines.

Valves should be provided in various branches and loops of air systems to allow separation from main system in event of failure or reason for shut-down. These valves should normally be open.

Branch lines to various air tools, and appliances *should be brought off top or side of mains to prevent entry of moisture* as it condenses in mains. *Never connect a branch line at bottom of main.*

3. Electrical Service Wiring: "Table B"

Check Table "B" for proper wire size for motor horsepower, phase and voltage on compressor unit installed. Improper wire size will cause excessive motor loads and possible motor burn-outs.

4. Oil and Moisture Extractors, Oilers and Dryers

Some air tools, spray guns, air appliances require air in a special condition, i. e., extremely dry, oil laden. These accessories for maximum benefit should be installed as close to tool as possible. Consult your tool supplier for recommendations.

TABLE "A"

pipe sizes for compressed air lines:

Air c.f.m.	Length of Pipe Lines in Feet							
	25	50	75	100	150	200	250	300
1	½	½	½	½	½	½	½	½
2	½	½	½	½	½	½	½	½
3	½	½	½	½	½	½	½	½
5	½	½	½	½	½	½	½	½
10	½	½	½	¾	¾	¾	¾	¾
15	½	¾	¾	¾	¾	¾	¾	¾
20	¾	¾	¾	¾	¾	¾	¾	¾
25	¾	¾	¾	¾	¾	1	1	1
30	¾	¾	¾	¾	1	1	1	1
35	¾	¾	1	1	1	1	1	1
40	¾	1	1	1	1	1	1	1
50	1	1	1	1	1	1	1	1
60	1	1	1	1	1¼	1¼	1¼	1¼
70	1	1	1	1	1¼	1¼	1¼	1¼
80	1¼	1¼	1¼	1¼	1½	1½	1½	1½
100	1¼	1¼	1¼	1¼	1½	1½	1½	1½

Check all piping and fittings regularly to avoid "leaks" in the system.

electrical wiring

TABLE "B"

All electrical connections should be made by a licensed electrician and in accordance with the electrical code for the particular area. Wiring must be such that full motor nameplate voltage plus or minus 10% is available at the motor terminals during starting. Recommended wire sizes are as follows:

WIRE SIZE (RUBBER COVERED) – B & S GAUGE NO.

Motor H. P.	Max. Length of Line (Ft.)	Single Phase			2 or 3 Phase			
		115	208	230	208	220	440	550
1/4	150	14	14	14	14	14	14	14
1/3	100	14	14	14	14	14	14	14
1/2	70	14	14	14	14	14	14	14
3/4	50	14	14	14	14	14	14	14
1	50	12	14	14	14	14	14	14
1-1/2	50	10	14	14	14	14	14	14
2	70	8	12	12	14	14	14	14
3	70	6	10	10	14	14	14	14
5	100	2	6	6	12	12	14	14
7-1/2	150	00	4	4	8	8	14	14
10	150	0000	2	2	6	6	12	12
15	150	—	—	—	4	4	10	10
20	150	—	—	—	3	3	8	8
25	150	—	—	—	2	2	6	8

Wiring hook-up must be made so that flywheel will turn as indicated by arrow on flywheel.

CHAMPION PNEUMATIC MACHINERY CO., INC.

1301 N. EUCLID AVE. • PRINCETON, ILLINOIS 61356-9990 • Phone 815-875-3321 • TLX 404471

Owner's Responsibilities

INSTALLATION:

Compressor must be located in a clean, well-ventilated, dry room to insure an adequate supply of fresh, clean, cool and dry air.

Compressor flywheel should have a minimum clearance of 12" from any obstruction to insure proper cooling of unit.

Lagging compressor to the floor is not recommended. When lagging is necessary, it is essential to shim the legs to avoid undue stress on the tank welds. For 5 year warranty to apply tank must be mounted on vibro isolator pads.

Necessary electrical wiring and connections should be made by a qualified electrician and must be installed in accordance with all NEMA and local electrical codes.

MAINTENANCE:

Refer to owner's manual for detailed maintenance instructions and service schedule.

Keep oil level at the full mark.

Change oil as required.

Keep complete unit clean.

Keep intake filters and valves clean. Inspect valves every 90 days.

Keep belts adjusted properly.

Keep nuts, bolts, capscrews and all fittings tight.

Failure of owner to comply with installation and maintenance procedures outlined above will void warranty

DISCOUNT COUPON (see over)

Pump Model	Coupon Savings
R10C	$5.00 per set
R15A	5.00 per set
R30B	10.00 per set
R40 & R40A	30.00 per set
R70 & R70A	60.00 per set

Redeemable at any CHAMPION distributor or send with check or money order when ordering from factory.

Cut on dotted line

DISCOUNT COUPON (see over)

Pump Model	Coupon Savings
R10C	$5.00 per set
R15A	5.00 per set
R30B	10.00 per set
R40 & R40A	30.00 per set
R70 & R70A	60.00 per set

Redeemable at any CHAMPION distributor or send with check or money order when ordering from factory.

CARE AND MAINTENANCE OF YOUR AIR COMPRESSOR

CAUTION TURN POWER OFF BEFORE START OF ANY MAINTENANCE ON THIS AIR COMPRESSOR

DISCONNECT UNIT FROM POWER SOURCE AND RELIEVE ALL AIR PRESSURE FROM TANK BEFORE PERFORMING ANY MAINTENANCE ON AIR COMPRESSOR

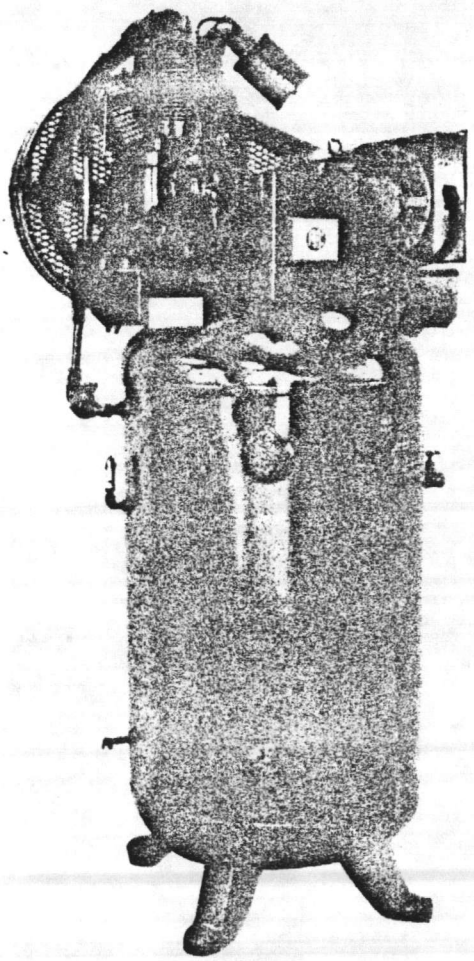

The following instructions are based on normal operation. Refer to manufacturer's manual for detailed instructions. If the unit is in excessively dusty area increase frequency of all checks.

DAILY	• Check for proper oil level. • Drain any condensate from receiver and traps. • Check for any unusual noise or vibration.
WEEKLY	• Clean air filter. • Clean all external parts of compressor and driver. • Safety valve should be tested manually to see that it does not stick.
MONTHLY	• Inspect entire air system for leaks. • Inspect oil for contamination and change if necessary. • Check belt tension and wear.
EVERY 3 MONTHS	• Change oil. • Inspect valve assemblies.

Loss of air pressure, when machine is idle and no air is being used, usually indicates that the check valve is not seating. This is caused by dirt or other foreign matter between seat and disc. With power off and air drained from tank, service check valve by removing plug, cleaning valve interior and check valve disc.

FOR MODELS WITHOUT OIL MONITOR: If motor fails to cut in or cut out at normal pressure range indicated on decal adjacent to pressure switch, malfunction is traceable to the Automatic Pressure Switch. Replace with new switch of like type (see make and part no. on switch cover) or consult your local electrician.

FOR MODELS WITH OIL MONITOR: If motor fails to cut in, check oil level in crankcase. If low, add oil and depress reset button on Oil Monitor. If oil level is satisfactory and Oil Mointor has not cut off, follow instructions in paragraph above.

AUTHORIZED SERVICE ORGANIZATION

FOR SERVICE CALL

PARTS **SERVICE**

Form No. 1172-2087A Rev. 686

1541 - 1.2.1.3 13.2.2

REFRIGERATED AIR DRYERS for compressed air systems

TECHNICAL MANUAL

MODELS 35NCA-400NCA

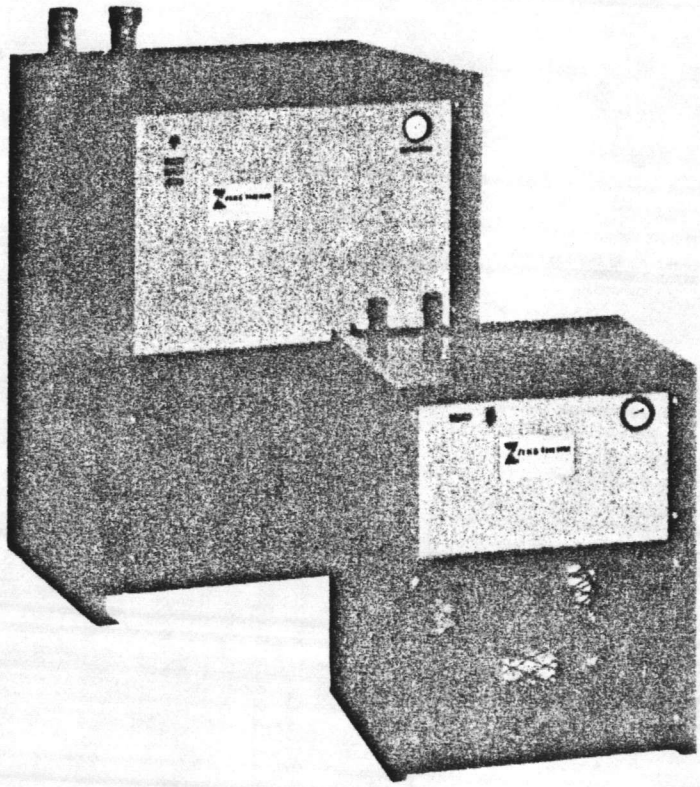

PERMEA (SM)
A MONSANTO COMPANY

ZEKS AIR DRIER CORPORATION

Malvern Industrial Park, Box 396
Malvern, Pennsylvania 19355
(215) 647-1600—Telex 83-4832
800-345-1156
All States East of Mississippi River 800-424-3867

MODEL NUMBER DESIGNATION AND SPECIFICATIONS

EXAMPLE: MODEL 200, 230/208-1-60, AIR COOLED, WEATHERPROOF, INSTRUMENT PKG.

200	NCA	A	2	H	O
NOMINAL CAPACITY	MODEL TYPE	CONDENSER OPTION	VOLTAGE OPTION	CABINET OPTION	ACCESSORY OPTIONS
35		A - Air Cooled	1-115-1-60	E - NEMA 7 Explosionproof	Consult Factory
50		W - Water Cooled**	2-230/208-1-60	H - NEMA 4 Weatherproof Indoors/Outdoors	
75			3-240/200-1-50	R - NEMA 3 Weatherproof Outdoors	
100			4-460-3-60	D - NEMA 12 Dustproof/ (Industrial Use)	
150			5-230/208-3-60		
200			6-575-3-60		
250					
300					
400					

MODEL	REFRIGERANT TYPE	REFRIGERANT CHARGE OZ.	VOLTAGE	ELECTRICAL COMPRESSOR RLA	ELECTRICAL COMPRESSOR LRA	ELECTRICAL FAN MOTOR RLA	ELECTRICAL FAN MOTOR LRA	WEIGHT LBS	WEIGHT KG	MAX.* WORKING PRES. PSIG
35NCAA1	R12	6	115-1-60;100-1-50	4.40	24.00	0.50	--	103	47	200
35NCAA2	R12	6	230/208-1-60;200-1-50	2.80	14.40	0.30	--	103	47	200
35NCAA3	R12	6	240/220-1-50	2.00	11.20	0.30	--	103	47	200
50NCAA1	R12	6	115-1-60;100-1-50	5.00	28.00	0.80	--	115	52	200
50NCAA2	R12	6	230/208-1-60;200-1-50	2.80	14.40	0.30	--	115	52	200
50NCAA3	R12	6	240/220-1-50	2.30	12.40	0.30	--	115	52	200
75NCAA1	R22	31	115-1-60;100-1-50	7.70	34.00	1.90	2.60	143	65	200
75NCAA2	R22	31	230/208-1-60;200-1-50	4.00	20.00	0.95	1.30	143	65	200
75NCAA3	R22	31	240/220-1-50	3.32	16.00	0.95	1.30	143	65	200
100NCAA1	R22	34	115-1-60;100-1-50	7.70	34.00	1.90	2.60	190	86	200
100NCAA2	R22	34	230/208-1-60;200-1-50	4.00	20.00	0.95	1.30	190	86	200
100NCAA3	R22	34	240/220-1-50	4.00	21.20	0.95	1.30	190	86	200
150NCAA1	R22	34	115-1-60;100-1-50	10.40	46.00	1.90	2.60	320	145	200
150NCAA2	R22	34	230/208-1-60;200-1-50	5.50	26.00	0.95	1.30	320	145	200
150NCAA3	R22	34	240/220-1-50	5.00	31.00	0.95	1.30	320	145	200
150NCAA5	R12	34	230/208-3-60;240/200-3-50	2.70	19.90	0.95	1.30	375	170	200
200NCAA2	R22	34	230/208-1-60;200-1-50	8.50	41.00	1.86	3.90	365	165	200
200NCAA3	R22	34	240/220-1-50	10.20	51.00	1.86	3.90	365	165	200
200NCAA4	R22	32	460-3-60;420/380-3-50	3.20	24.00	0.89	1.70	370	168	200
200NCAA5	R22	32	230/208-3-60;240/200-3-50	5.00	49.00	1.86	3.90	370	168	200
200NCAA6	R22	32	575-3-60 Transformed	3.20	24.00	0.89	1.70	370	168	200
250NCAA2	R22	61	230/208-1-60;200-1-50	11.10	56.00	1.86	3.90	445	202	200
250NCAA3	R22	61	240/220-1-50	10.50	52.50	1.86	3.90	445	202	200
250NCAA4	R22	61	460-3-60;420/380-3-50	3.20	24.00	0.89	1.70	453	205	200
250NCAA5	R22	61	230/208-3-60;240/200-3-50	5.00	49.00	1.86	3.90	453	205	200
250NCAA6	R22	61	575-3-60 Transformed	3.20	24.00	0.89	1.70	453	205	200
300NCAA2	R22	65	230/208-1-60;200-1-50	11.10	56.00	(2)1.86	(2)3.90	505	229	200
300NCAA3	R22	65	240/220-1-50	10.50	52.50	(2)1.86	(2)3.90	505	229	200
300NCAA4	R22	65	460-3-60;420/380-3-50	3.20	24.00	(2)0.89	(2)1.70	515	234	200
300NCAA5	R22	65	230/208-3-60;240/200-3-50	5.00	49.00	(2)1.86	(2)3.90	515	234	200
300NCAA6	R22	65	575-3-60 Transformed	3.20	24.00	(2)0.89	(2)1.70	515	234	200
400NCAA2	R22	68	230/208-1-60;200-1-50	14.40	71.00	(2)1.86	(2)3.90	585	265	200
400NCAA3	R22	68	240/220-1-50	15.50	68.80	(2)1.86	(2)3.90	585	265	200
400NCAA4	R22	68	460-3-60;420/380-3-50	4.50	27.00	(2)0.89	(2)1.70	585	265	200
400NCAA5	R22	68	230/208-3-60;240/200-3-50	8.50	65.00	(2)1.86	(2)3.90	585	265	200
400NCAA6	R22	68	575-3-60 Transformed	4.50	27.00	(2)0.89	(2)1.70	585	265	200

* Maximum Working Pressure limited by Trap - Consult factory for details.

** For watercooled machines, refrigerant charge will be different than aircooled - Refer to the machine nameplate for the correct charge.

TABLE I

GENERAL

The Zeks-Therm air dryer removes moisture, dirt, oil vapor, and other contaminants from the compressed air. This is accomplished by cooling the air with a refrigeration unit to below its dewpoint causing the moisture to condense. This dependable, highly efficient dryer can be easily installed in any pneumatic system in which dry air is required or desired. Refer to Principle of Operation for complete operating details.

INSTALLATION

Inspection - The unit should be inspected upon receipt for any signs of damage during transit. Any signs of damage should be reported immediately to the carrier.

Locating and Mounting - The dryer should not be located in an area where ambient temperature is likely to exceed 113°F(45°C) or be less than 50°F(10°C).

For locations where this maximum ambient temperature is exceeded for prolonged periods of time, a watercooled refrigeration unit must be furnished.

On installations with relative steady flow rate, the dryer is normally connected after the air receiver. But if loads fluctuate widely as in sand blasting, sufficient storate capacity downstream of the dryer should be available to prevent excessive airflow through the dryer.

The dryer may be mounted on any substantial floor that is free of excessive vibration.

The dryer must be sufficiently clear of walls and adjoining equipment so that the access panels may be easily removed, and also to provide free circulation of air through the ventilating louvers and grills. Make sure that sufficient space is available on the condenser inlet and outlet side. A minimum of 12in.(300mm) should be allowed.

In floor mounting, make certain that the dryer is level before anchoring the unit to the floor. If necessary, insert shims under the mounting rails to level.

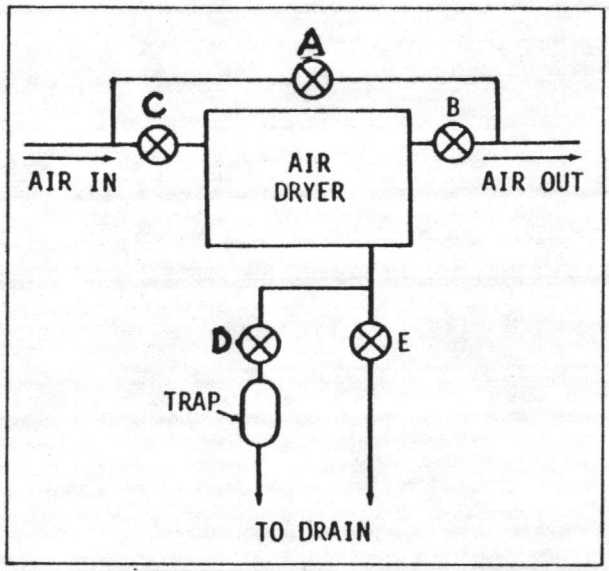

FIGURE 1. TYPICAL PIPING ARRANGEMENT

Electrical Connection - Connect wires located inside electrical junction box on dryer to power source. The nameplate on the dryer identifies the voltage requirements. A suitable fused disconnect switch in accordance with national and local code requirements is recommended. See Table 1 for full load amps requirement of unit.

Zeks-Therm air dryers are equipped with an on-off power switch. The dryer is designed to run continuously while the air system is being used. Dryer may be turned off during night time or weekend shutdown periods. This should be done with the on-off switch.

IMPORTANT: Maximum allowable voltage variation is +15% and -10% from rated voltage.

Piping - Install piping, fittings and accessory items as indicated in Figure 1. For bypass and isolating purposes, valves A,B, and C must be installed (not furnished). An automatic draintrap, preferably of the ball and float type, (std. 35 thru 400 must be installed in the drain line. For testing and isolating this trap for servicing purposes, valves D and E must be installed (not furnished).

Valves - To operate dryer all valves shown in Figure 1 are to be closed except valves (B), (C), and (D). Valve (A) used for by pass purposes; Valve (E) is for test and drain purposes.

OPERATION (Refer to Figure 2)

Compressed Air System - Compressed air entering dryer goes first to the precooler/reheater where it is cooled by the cool air leaving the separator. The air then goes into the evaporator where it is further cooled to the desired dewpoint by the freon in the refrigeration circuit. The air continues to the separator where the condensed moisture is separated from the air by centrifugal force and the condensate goes out the drain while dry compressed air goes to the precooler/reheater where it is reheated by the incoming hot moist air. The air then goes back into the compressed air system.

Cooling in the refrigeration circuit is accomplished by the continuous circulation and evaporation of a fixed supply of refrigerant, either R12 or R22. The hermetically sealed compressor delivers the gas thru the discharge tube under pressure to the condenser. Here the combined action of the fan and the finned tubes releases the heat to the air. When the gas loses heat it reverts to a liquid.

The flow of liquid refrigerant into the evaporator is controlled by the capillary tube. As the refrigerant enters the evaporator it is subject to much lower pressure due to the suction of the compressor. Therefore it will boil and evaporate picking up heat from the compressed air and lowering its temperature. The temperature of the refrigerant entering the evaporator is controlled by a by-pass valve. This valve meters the amount of hot gas which is allowed to bypass the condenser and mixes with the refrigerant, thus controlling the temperature of the freon entering the evaporator.

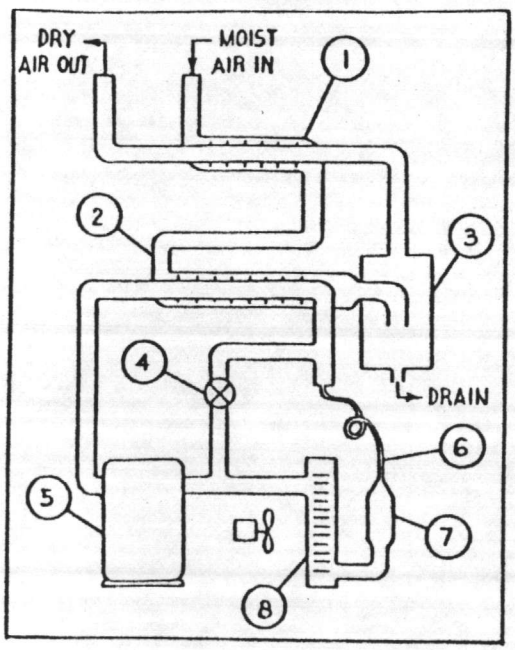

(1) PRECOOLER/REHEATER
(2) AIR CHILLER EVAPORATOR
(3) SEPARATOR
(4) HOT GAS BYPASS VALVE
(5) COMPRESSOR
(6) CAPILLARY TUBE
(7) FILTER/DEHYDRATOR
(8) CONDENSER (AIR OR WATER COOLED)

FIGURE 2 SCHEMATIC

ROUTINE INSPECTION AND MAINTENANCE

The Zeks-Therm refrigerated air dryer requires little maintenance. Fan motor bearings are prepacked and sealed. However it is recommended to inspect and service your dryer at regular intervals to obtain maximum benefit out of your dryer.

Lubrication - These dryers are constant running hermetically sealed condensing units. Units do not require any lubrication.

1. Inspect Refrigerant Condenser - For proper operation, it is essential that the condenser fins are free of dirt and dust. Regular cleaning is therefore required. If the dryer is located in an area where dust is excessive, a condenser ambient air filter should be fitted.

2. Blow Down and Test Condensate Drainage System - Refer to figure 1 - Open test valve (E) occasionally to test operation of the automatic drain trap. Should water blow through the test valve, the automatic trap is inoperative and should be inspected and cleaned. To service trap, isolate it from the system by closing valve (D). Recheck the operation of the drain trap with the test valve after several days of operation.

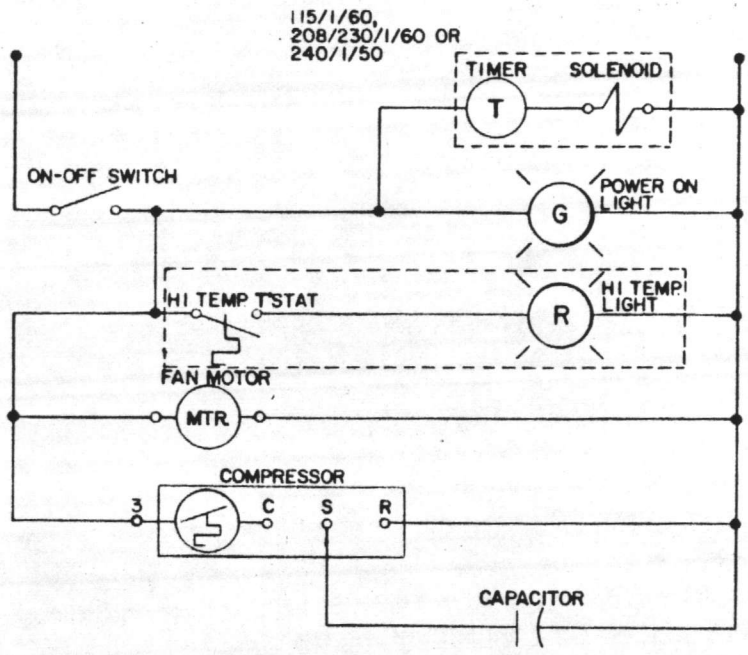

MODELS
35 NCAA1
35 NCAA2
35 NCAA3
50 NCAA1
50 NCAA2
50 NCAA3
75 NCAA1
75 NCAA2
75 NCAA3
100 NCAA1
100 NCAA2
100 NCAA3

– – – – – OPTIONAL

* NOTE - FAN CYCLE SWITCH USED ON MODELS 125, 150, 200 ONLY
NOTE 2 - NCA200 FAN MOTOR LEADS; RED WIRE 208V, WHITE WIRE COMMON, TAPE UNUSED WIRE

AIR COOLED MODELS

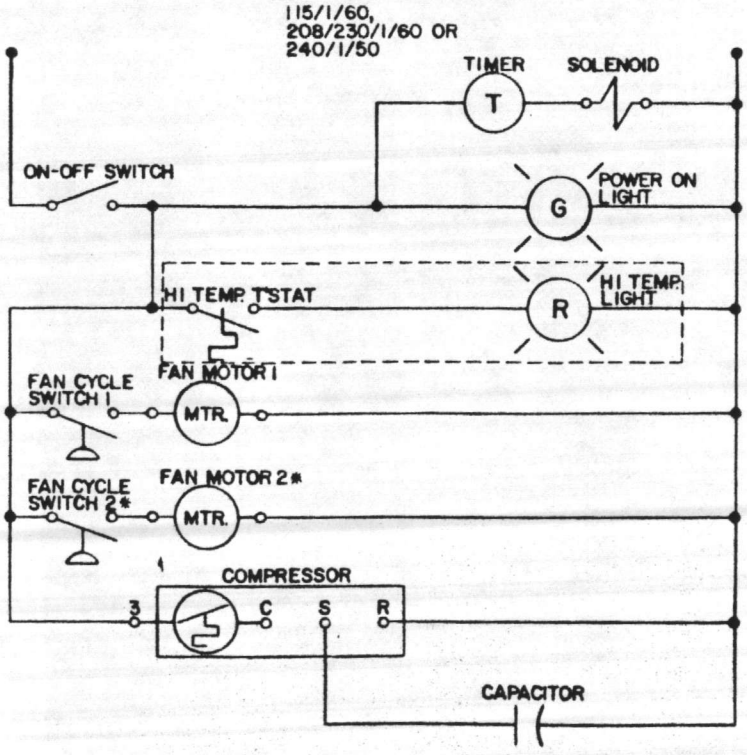

MODELS
150 NCAA1
150 NCAA2
150 NCAA3
200 NCAA2
200 NCAA3
250 NCAA2
250 NCAA3
300 NCAA2
300 NCAA3
400 NCAA2
400 NCAA3

* NOTE - MOTOR 2 AND FAN CYCLE SWITCH 2 USED ON MODELS 300 AND 400 ONLY

– – – – – OPTIONAL

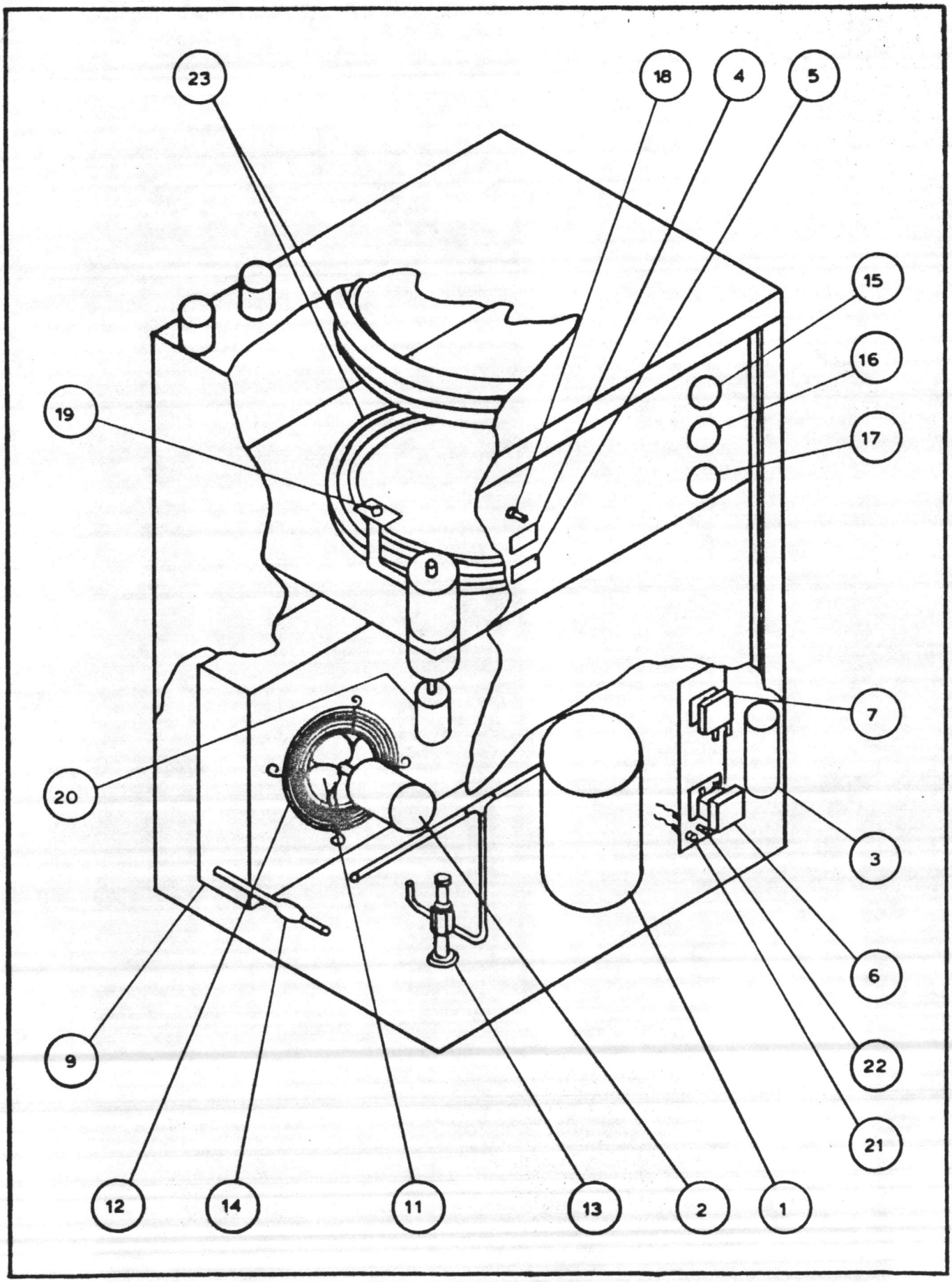

PARTS LIST ITEM NUMBERS

PARTS LIST NCA

ITEM	1	2	3	4	5	6	7
DESCRIPTION	COM-PRESSOR	FAN MOTOR	RUN CAP-ACITOR	POWER ON LIGHT	HI TEMP. LIGHT	CON-TACTOR	TRANS-FORMER
35NCAA1	600029	--	--	697299	697297	--	--
35NCAA2	697354	--	--	697302	697300	--	--
35NCAA3	697365	--	--	697302	697300	--	--
50NCAA1	600005	--	--	697299	697297	--	--
50NCAA2	697354	--	--	697302	697300	--	--
50NCAA3	697355	--	--	697302	697300	--	--
75NCAA1	697191	697304	697310	697299	697297	--	--
75NCAA2	697192	600083	697310	697302	697300	--	--
75NCAA3	697190	600083	697311	697302	697300	--	--
100NCAA1	697191	697304	697310	697299	697297	--	--
100NCAA2	697192	600083	697310	697302	697300	--	--
100NCAA3	697193	600083	697310	697302	697300	--	--
150NCAA1	697194	697304	697310	697299	697297	--	--
150NCAA2	697195	600083	697310	697302	697300	--	--
150NCAA3	697196	600083	697311	697302	697300	--	--
150NCAA5	697361	600083	--	697302	697300	697289	--

PARTS LIST NCA

ITEM	DESCRIPTION	35NCA	50NCA	75NCA	100NCA	150NCA
8	Water Valve	--	--	600561	600561	600561
9	Condenser (Air Cooled)	--	--	697172	697172	697168
10	Condenser (Water Cooled)	--	--	600554	600554	600555
11	Fan Blade	--	--	697186	697186	697186
12	Motor Mount	--	--	697223	697223	697223
13	Hot Gas Valve	600403	600403	697341	697341	600405 230-3-60 697341 A1,A2,A3
14	Dryer	698044	698044	698044	698044	698045
15	Suction Pressure Gauge	697358	697358	697306	697306	697306
16	Leaving Air Pressure Gauge	697285	697285	697285	697285	697285
17	Entering Air Temp. Gauge	697284	697284	697284	697284	697284
18	Switch	697303	697303	697303	697303	697303
19	Hi Temp. T'Stat	697277	697277	697277	697277	697277
20	Trap	697360	697360	697360	697360	600569
						697362 A1,A2,A3
21	Fan Cycle Switch #1	--	--	--	--	600097 230-30-60
22	Fan Cycle Switch #2	--	--	--	--	--
23	Exchanger	700908	700909	700910	700911	700912

IOM-36
March 1976

owner's manual

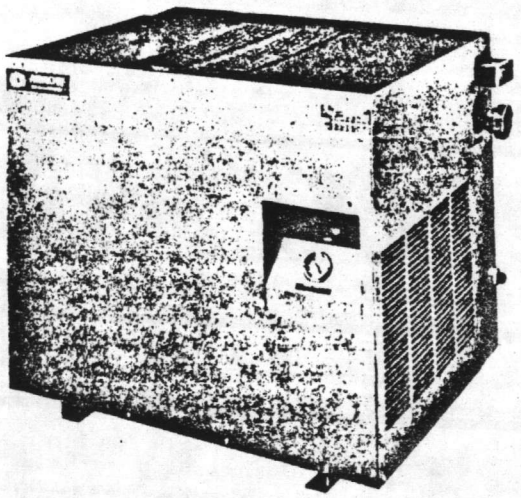

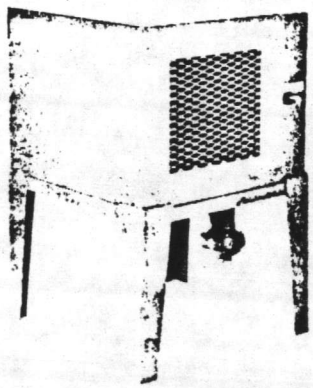

Installation
Operation
Maintenance

INSTRUCTIONS FOR ARROW MODELS
A-15 A-30 A-50 A-75 3510
A-125 3530 3531 5030
NON-CYCLING REFRIGERATED AIR DRYERS

Introduction

Compressed Air Dryer units are carefully prepared for shipment at the factory to protect dryer from damage in transit. All units are shipped in heavy duty corrugated cartons.

Receiving/Inspection

Dryer is shipped F.O.B. factory. Immediately upon arrival, unit should be checked for possible shipping damage. If damage is found, report it to the carrier and file damage claim.

Suction pressure gauge should be checked. If gauge reads zero, it indicates possible refrigerant leak. Notify dealer immediately and file claim with carrier.

Location

Dryer should be installed so there is sufficient room around the unit to permit circulation of air through refrigeration condensing unit.

Locate dryer indoors, in a protected area, where ambient temperature will range between 55 and 100°F.

15 and 30 SCFM dryer use drain trap installed into separator directly under dryer. Unit to be mounted on floor stand or on wall to provide clearance for trap. All other units can be mounted on the floor.

Installation

Connect compressed air lines to inlet and outlet connections marked on the cabinet. Be certain air passes through Air Dryer in proper direction. Air line should be connected with standard pipe fittings. To avoid piping stress from vibration transmission, flexible connections are recommended.

It is recommended that a by-pass line be piped around the Air Dryer. Shutoff valves should be installed at both inlet and outlet with another valve in the by-pass line. This would permit dryer to be removed from system, or serviced without turning off the air.

An automatic DRAIN TRAP is to be used with every dryer. Trap for 50, 75, 125 SCFM is packaged in carton and shipped inside metal enclosure of dryer.

On 15 and 30 SCFM units, drain trap must be assembled into bottom of separator at job site. **Caution:** Use wrench to hold fitting while assembling trap. Use piping compound on threads to guarantee air tight fit. On larger units, trap must be connected to union on outside of dryer. It is recommended that a shut-off valve be installed between dryer and trap so trap can be serviced without shutting off dryer.

When ready to install trap, follow the instructions from the manufacturer.

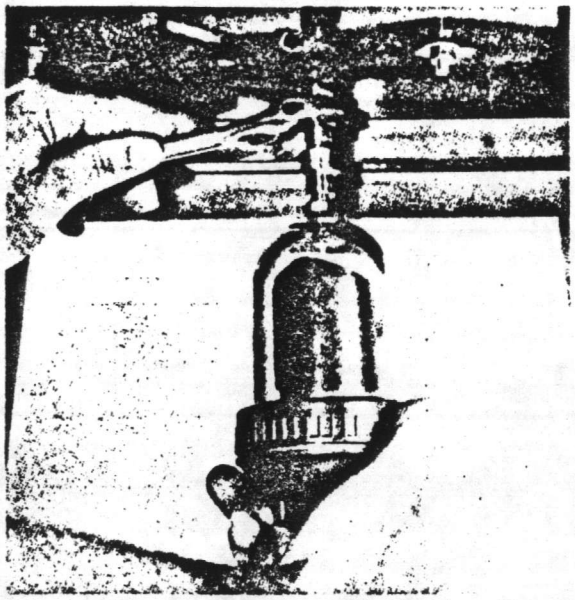

TRAP ASSEMBLED ON 15 OR 30 SCFM UNIT

Operating Conditions

The Arrow dryer is non-cycling and is designed to run continuously even under light loads. If a compressed air system remains pressurized and the air compressor cycles on and off to maintain line pressure, the Air Dryer should remain in operation to keep the lines dry. The Air Dryer MUST NOT be cycled with the air compressor.

Design Conditions are as follows:

Inlet Air Temperature	100°F
Line Pressure	100 psig
Ambient Air Temperature	100°F

Start Up

Check nameplate voltage and amperage. Provide fused line disconnect switch with time delay fuses in accordance with local codes.

ROTATION - All compressors will run properly in either direction. Fans are pull through design.

Before operating, fan should be turned by hand to be certain blade clears condenser housing. Blade can be bent if necessary to clear.

Check refrigerant suction pressure gauge. With dryer "off", gauge should read close to room temperature. (i.e. 70°F room and 70 psi gauge). If gauge reads below 30 psi with dryer "off", call your dealer.

Maintenance

Be certain there is a free flow of water from the DRAIN TRAP. A considerable amount of dust can be drawn into a system. The air and water, which is separated, may become emulsified with oil from the air compressor. Accumulated sludge can be removed by "blowing down" through the drain plug in the bottom of the trap.

The drain trap mechanism should be inspected periodically and all dirt and deposits removed from working parts. Worn parts should be replaced. When mechanism is reassembled make sure all parts are properly aligned and move freely.

Be certain there is a free flow of air over the CONDENSER coils. The fans on air cooled units, are "pull through" so the condenser fins should be checked periodically to prevent a build up of dust deposits. If condenser is coated with dust, use vacuum cleaner or blow compressed air through fins to clean.

Dryer is furnished with refrigerant analyzer gauge. Normal reading is 30-36 when dryer is in operation.

Frosting on refrigerant lines is an indication of too much refrigeration capacity resulting in frozen air passages so air will not go through the dryer. Adjustment can be made to hot gas by-pass valve to increase temperatures.

15 and 30 CFM

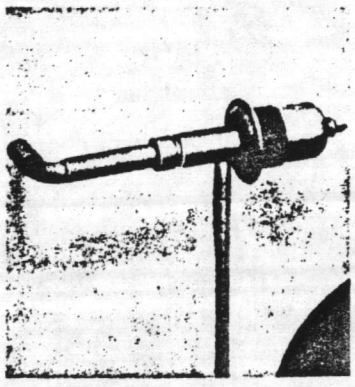

Loosen locknut on hot gas by-pass valve. Screw can be turned with screwdriver. Turning screw "in" (clockwise) reduces refrigeration effect. A ¼ turn will normally be sufficient. Tighten locknut.

50, 75, 125 CFM

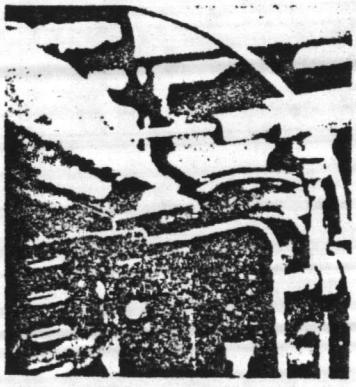

Trouble Analysis

If trouble should develop, it will be evident in one or a combination of the following conditions.

WATER IN AIR LINE

Dirty condenser

Clogged drain trap

Low refrigerant charge
Suction pressure gauge low

Defective expansion valve
Suction pressure gauge normal

Piped backwards

Air by-pass valve open

After cooler not working

Too much air flow

HIGH PRESSURE DROP

Too much air flow

Line pressure too low

Drain trap not working - water in dryer

Suction pressure gauge too low

UNIT WILL NOT RUN or CONTINUES TO CYCLE

No power to machine

Low refrigerant charge - unit stays off

Dirty condenser, cuts out on high head pressure

Ambient temperature too high

Too much air flow combined with high temperature

Burned out compressor

Defective expansion valve, unit running on hot gas only.

Cutting out on overloads

Notes:

1. If dryer should cycle off and on for any reason, TURN UNIT OFF. Check for source or trouble.
2. Before calling factory for instructions, have following data to report:

   a. Model No._____ Serial No._____

   b. Refrigerant suction pressure

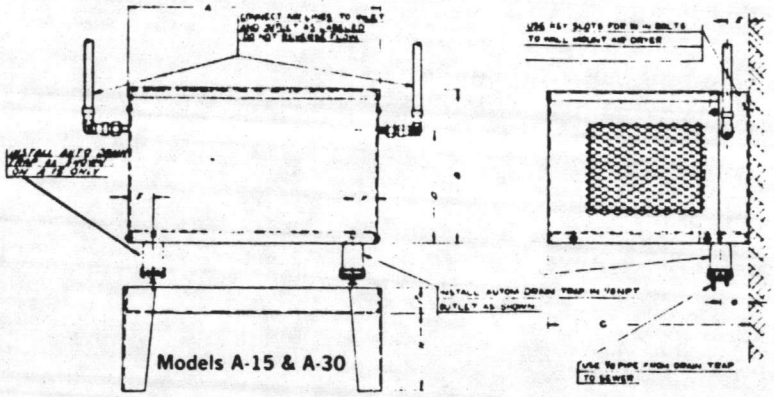

STANDARD AIR DRYERS									
SIZE	CONNECTIONS	DIMENSIONS							
	STANDARD	A	B	C	D	E	F	G	H
A-15	⅜ O.D.	22¼	15	15 1/16	9⅞	2	3 1/16	2	11
A-30	⅜ O.D.	22¼	15	18 7/8	11⅞	2	3 3/16	2	11

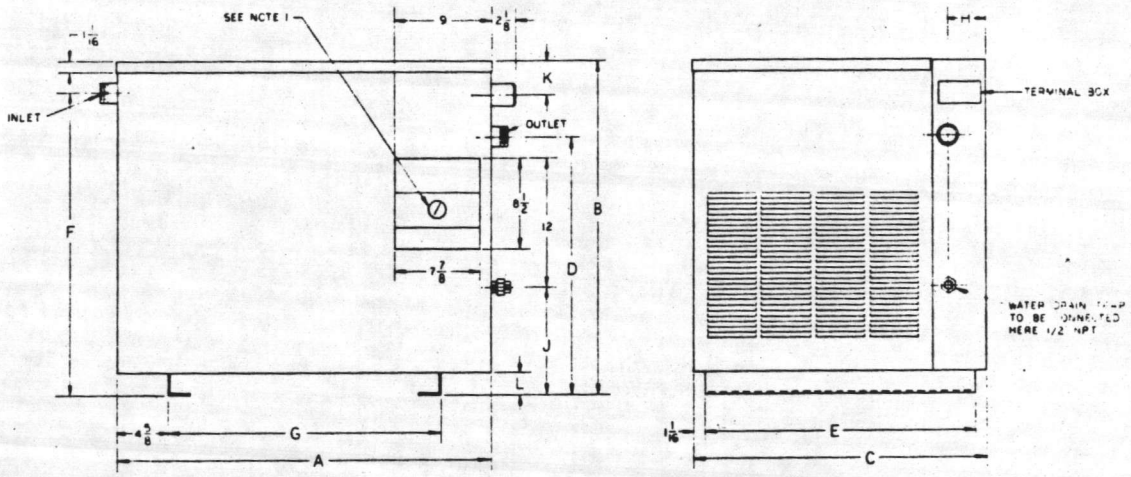

NOTES:

1—INSTRUMENT PANEL OPTION NOT INCLUDED WITH MODEL A-50.

2—TOLERANCE ON DIMENSIONS INDICATED IN TABLE IS ±¼.

STANDARD AIR DRYERS																		
Model	Airline Connection	DIMENSIONS											H. P. Rating	Power Supply	Full Load Amp.	L. R. Amp.	Refrig. Charge	Net Wt.
		A	B	C	D	E	F	G	H	J	K	L						
A-50	1" N.P.T.	28¼	23⅛	24⅛	15⅝	22	21⅜	19	1⅜	7⅛	2⅛	1¼	½	115/1/60	9.5	47.7	3 lbs.	150
A-75	1½" N.P.T.	34¼	31⅛	27⅛	24⅛	25	28⅜	25	3½	10⅛	3⅛	2⅛					5 lbs.	210
3510														115/1/60	14.2	69.0		
3530													¾	230/1/60	7.6	35.0		
5030														220/3/60	3.5	19.9		375
A-125													1	440/3/60	3.6	13.5		400
3531													1	230/1/60	8.0	40.0		
														220/3/60	5.5	21.5		390
														440/3/60	3.6	13.5		

ARROW PNEUMATICS, INC.

P. O. Box 739, Mundelein, Illinois 60060

Phone: (312) 566-9100

TAB PLACEMENT HERE

DESCRIPTION:

10.

☐ **Tab page did not contain hand written information**

☒ **Tab page contained hand written information**
***Scanned as next image**

TROUBLE SHOOTING AND MAINTENANCE

The following information on trouble shooting a complaint of no heating or cooling is given as a guide for someone to use. It does not list all possible troubles but does list the most common ones.

The following information on maintenance is given as a guide for the owner to use in setting up a specific maintenance schedule that will fit his particular system. This guide should be used in conjunction with and to supplement the respective manufacturer maintenance data.

The owner should note that the guide enclosed most likely contains information on some equipment that was not used in his system. This information might be useful to the owner on other buildings or systems that he maintains.

For any heating and air conditioning system to continue to operate in an energy efficient manner it is very important that the temperature control system continue to operate properly. To insure this, it is very important to perform maintenance checks on the system.

Trouble Shooting

The list described below is not meant to be an exact and comolete list but is intended to give the maintenance personnel a place to start. The items listed below are the most common causes of trouble.

(A) Complete Heating and Cooling System Not Operating

1. If the system is time clock controlled, check the following:
   a. Be sure the time clock setting is correct.
   b. Be sure time clock is indexed for "Day" or "On" operation.
   c. Check to be sure control power is present.
   d. Check any safety or outside air limit control to be sure it is operating and set properly.
   e. Check indexing switches if used.

(B) A.H.U. Not Operating

1. Check to be sure it is indexed to operate from respective time clock or system control.
2. If it is, check any safety controls used (Firestat, Freezerstat, Smoke detector, etc.)
3. Check starter over loads. (Also, check to be sure the control power disconnect switch, if used, is on.)
4. Check to be sure power is present and that starter operates.
5. Check to be sure control or indexing voltage is present.

(C) Entire Zone or Unit Not Heating or Cooling

1. Check to be sure unit is running.
2. If not running, check as described in "B" above.
3. Check setting of respective thermostat and sub-bases switches if used.
4. Check to be sure that heating or cooling medium is available. (Hot water, steam, chilled water, electric heat or condensing unit operation.)
5. Check to see that respective heating or cooling control operates as it should.
6. If electric controls, check to see if control power is available.

If pneumatic controls, check to see if air pressure is available.

(D) A Single Zone Not Heating or Cooling

1. Check to be sure unit is running.
2. If not running, check as described in "B" above.
3. Check setting of zone thermostat and sub-base switch if used.
4. Check to be sure heating or cooling medium is available.
5. Check to see that zone control device operates (Variable volume motor on mixing box motor; H. W., steam, or C. W. valve motor; zone damper motor) operates from respective thermostats.
6. If electrical controls, check to be sure power is available to that particular zone control. If pneumatic controls, check to be sure air pressure is available.

(E) Boiler Will Not Operate

1. Check to be sure main power and control power is available.
2. Check to be sure it is indexed to operate from system controls, time clock, operating control, outside air thermostat, etc..
3. Check safety controls (L.W.C.O., High Limit, Flame Safety Controls). Note that sometimes 2, LWCO and/or High Limits are provided and one may be manual reset type.
4. Check to see if H. W. pump is operating. Sometimes boiler operation is interlocked with H. W. pump operation.
5. Check outdoor thermostat if used.
6. Check to be sure fuel is available.

(F) Chiller Will Not Operate

1. Check to be sure main power and control power is present.
2. Check to be sure it is indexed to operate from system controls, time clock, operating control, outside air thermostat, etc..
3. Check safety controls, especially the the flow switches. (Chilled & condenser water)
4. Check chilled water and condenser pump operation. Sometimes chiller operation is interlocked with C. W. and/or condenser water pump operation.

4. Check circuit breaker or fuses that are installed in unit.

5. Check control power and/or control fuse if used.

6. Check safety controls (firestat, freezerstat, smoke detector, etc.)

I - Fan Coil Unit or Unit Ventilator Will Not Operate

1. Check to be sure it is indexed to operate from respective time clock, or system controls, if used.

2. Check respective wall thermostat and subbase switch, if used.

3. Check power to unit.

4. Check circuit breaker or fuses that are installed in unit.

5. Check control power and/or control fuse if used.

6. Check safety controls (firestat, freezerstat, smoke detector, etc.)

7. Check position of fan speed switch if used.

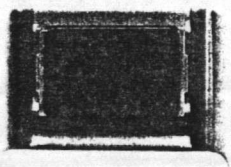

(F) Heat Pump or Condensing Unit

1. Check to be sure it is indexed to operate from respective time clock, or system controls if used.
2. Check respective wall thermostat and sub-base switches.
3. Check power to unit.
4. Check circuit breaker or fuses that are installed in unit.
5. Check control power and/or control fuse if used.
6. Check safety controls (Firestats, Freezerstats, smoke detectors, High & Low pressure switches, Timers, etc.).
7. If they are water cooled units, they may have a water flow switch and a low temperature switch.

(G) Electric Duct Heater

1. Check to be sure it is indexed to operate from respective controller and/or thermostat.
2. Check to be sure respective supply air fan is operating.
3. Check to be sure main power and control power is present.
4. Check air flow switch if provided.
5. Check auto and manual reset High Limits.
6. Check melting type High Limits in power legs inside heater.
7. Check to be sure heater coils are not open.

MAINTENANCE

Temperature Controls

The control system needs bo be checked for complete and proper operation at least once each year. It is recommended that at least the following be done:

Daily- If the system is pneumatic, do the following: If no auto traps are used on the air compressor, the air tank and filter must be drained daily to prevent moisture from getting into the system.

Weekly- Check time clock operation and system indexing switches to be sure that they are set properly.

If the system is pneumatic, do the following:

1. Check oil level in air compressor.
2. Check air drier to be sure it is operating.
3. Check air filter glass to be sure it is dry. If not, check air drier operation and auto traps on drier and compressor.
4. If oil appears in air filter glass, check air compressor. It is imperative that no oil or water get into the control air system. If excess oil continues to appear, either rebuild or replace the compressor or an oil filter can be installed in the line.

Quarterly

If the system is pneumatic, do the following:

1. Check air compressor operation.
2. Change oil in air compressor.
3. Check air and oil filter, if used, in air line. Replace oil filters as needed.
4. Check drain traps if used.
5. If two compressors are used check to be sure alternater is working. If no alternater was supplied, readjust pressure switch to change lead compressor. Check to be sure a manual alternating switch was not installed before changing PE switch setting.

Annually

1. Operate each thermostat and switch to be sure it operates its respective valve, damper motor, or electric motor as required.

2. Visually check all control valves for leaks around bonnett and packing nuts. Replacement packing is available from control manufacturers.

3. Check settings on all remote thermostats to be sure they are set properly.

4. Check all safety controls and smoke detectors for proper operation.

5. Check operation of each automatic damper to be sure it operates freely and that linkage is adjusted properly.

6. Lubricate control damper bearings as required.

7. If pneumatic, check the safety relief valve on the compressor and the low pressure side of the PRV.

TAB PLACEMENT HERE

DESCRIPTION:

7.

☐ **Tab page did not contain hand written information**

☑ **Tab page contained hand written information**
***Scanned as next image**

Confidential Records Management, Inc.
New Bern, NC
1-888-622-4425
9/08

TRANE™

Installation Operation Maintenance

SAHC-IOM-2

Library	Service Literature
Product Section	Unitary
Product	Rooftop Air Conditioning
Model	Commercial Single-Zone
Literature Type	Inst.-Oper.-Main.
Sequence	2
Date	July 1985
File No.	SV-UN-RT-SAHC-IOM-2-785
Supersedes	

Commercial Rooftop Single-Zone Air Conditioners

For Variable Air Volume Applications

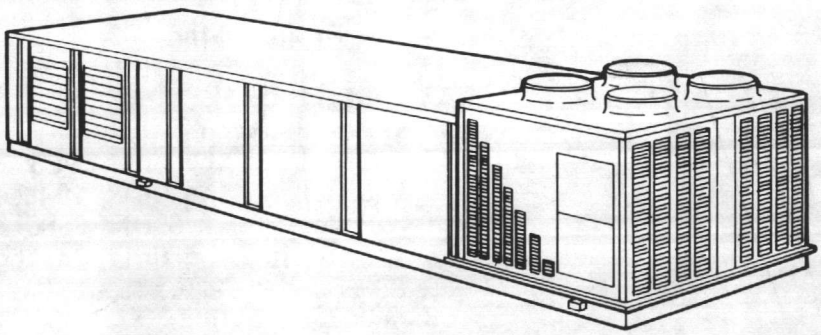

Models

SAHC C20, C25, C30, C40, C50, C55, C60, C75
SBHC C20, C25, C30, C40, C50, C55, C60, C75
SEHC C20, C25, C30, C40, C50, C55, C60, C75
SFHC C20, C25, C30, C40, C50, C55, C60, C75
SLHC C20, C25, C30, C40, C50, C55, C60, C75
SSHC C20, C25, C30, C40, C50, C55, C60, C75
SXHC C20, C25, C30, C40, C50, C55, C60, C75

Since The Trane Company has a policy of continuous product improvement, it reserves the right to change specifications and design without notice. The installation and servicing of the equipment referred to in this booklet should be done by qualified, experienced technicians.

Table of Contents

4 Model Number Description

5 Unit Nameplate

6 General Information
6 Unit Inspection
17 Roofcurb
17 Supply and Return Air Ductwork
17 Clearances

19 Installation
19 Setting the Unit
19 Rigging
21 Condensate Drain Connections
21 Compressor Cap Screws and Spacer Angles
21 Supply and Exhaust Air Fan Shipping Isolators
22 Discharge Line Clamps
22 Power Supply Wiring
32 Electrical Service Sizing
34 Control Power Wiring
34 System Optimization Connections
34 Gas Piping (SBHC, SFHC)
37 Gas Pressure
37 Flue
38 Piping for Heating Coils
41 Night Setback/Morning Warm-Up Thermostat
43 Electronic Night Setback Panel
43 --Displays
44 --Programming

47 Start-Up
47 Preparation
47 Starting the Unit in the Cooling Mode
49 Starting the Unit in the Night Setback/Morning Warm-Up Mode (SEHC, SLHC, SSHC)
55 Starting the Unit in the Heating Mode (SBHC, SFHC)
55 --Burner Adjustment
58 Oil Level
58 Liquid Line Sight Glass
58 Operating Pressures
58 Balancing Supply and Exhaust Air
58 Determining CFM
58 Fresh Air Dampers
69 Low Ambient Dampers
69 Direct Space Pressurization (Statitrac) Control
70 Variable Inlet Vanes
72 Discharge Air Controller Checkout Procedure
72 Final Checkout

74 Installation Checklist

The Trane Company
La Crosse, Wisconsin 54601-7599
Printed in U.S.A.

©American Standard Inc. 1985

76 Operation
76 General
76 Unit Operation in the Cooling Mode
78 System Optimization
78 Gas Heating Functions (SBHC, SFHC)
78 --Fenwal Ignition System
79 --Honeywell Ignition System
80 Condenser Fan Sequencing
82 Safety Controls

85 Maintenance
85 Weekly
85 Monthly
86 Annually - Cooling Season
87 Annually - Heating Season
87 Maintenance Procedures
87 --Air Filters
87 --Lubrication
89 --Fan Belt Adjustment
89 --Gas Furnace Section (SBHC, SFHC)
90 --Coil Cleaning
91 --System Pumpdown

93 Trouble Analysis

Unit Model Number Description

Trane products are identified by a multiple character model number that precisely identifies a particular type of unit. An explanation of the Rooftop Single-Zone model number is shown below. It will enable the owner or Service Engineer to define operation, components and accessories.

Model Number: S E H C C25 1 H C 0 0 B 3 2 A 1 A 1 0 L

Digit Number: 1 2 3 4 5,6,7 8 9 10 11 12 13 14 15 16 17 18 19 20 21

Digit 1
Unit Type
S = Self Contained

Digit 2
Unit Function
A = DX Cooling, No Heat
B = DX Cooling, Propane Gas Heat
E = DX Cooling, Electric Heat
F = DX Cooling, Natural Gas Heat
L = DX Cooling, Hot Water Heat
S = DX Cooling, Steam Heat
X = DX Cooling, No Heat, Extended Casing

Digit 3
Unit Air Flow
H = Single-Zone

Digit 4
Development Sequence
C = Third

Digits 5, 6, 7
Nominal Capacity
C20 = 20 Tons
C25 = 25 Tons
C30 = 30 Tons
C40 = 40 Tons
C50 = 50 Tons
C55 = 55 Tons
C60 = 60 Tons
C75 = 75 Tons

Digit 8
Power Supply
1 = 460/60/3 PWS
2 = 575/60/3 PWS
3 = 230/60/3 PWS
4 = 460/60/3 XL
6 = 200/60/3 PWS
A = 380/50/3 PWS
B = 415/50/3 PWS

Digit 9
Heating Capacity (See Note 1)
H = High Heat
L = Low Heat
0 = No Heat

Digit 10
Design Sequence
A = First
B = Second
C = Third

Digit 11
Exhaust
0 = None
1 = Barometric
2 = 100% - 1.5 HP
3 = 100% - 3 HP
4 = 100% - 5 HP
5 = 100% - 7.5 HP
6 = 100% - 10 HP
7 = 100% - 15 HP
8 = 100% - 20 HP
A = 50% - 1.5 HP
B = 50% - 3 HP
C = 50% - 5 HP
D = 50% - 7.5 HP

Digit 12
Exhaust Air Fan Drive Selection
0 through 9

Digit 13
Filter
A = Throwaway
B = Cleanable Wire Mesh
C = Hi Efficiency Throwaway
D = Bag

Digit 14
Supply Air Fan Horsepower
1 = 3 HP
2 = 5 HP
3 = 7.5 HP
4 = 10 HP
5 = 15 HP
6 = 20 HP
7 = 25 HP
8 = 30 HP
9 = 40 HP

Digit 15
Supply Air Fan Drive Selection
0 through 9

Digit 16
Fresh Air Section
A = No Fresh Air
B = 0 - 25% Manual
D = 0 - 100% Economizer

Digit 17
System Control
1 = Electronic Room Thermostat
3 = Electronic Supply Air VAV

Digit 18
Accessory Panel
A = None
B = Signal Light Connections for Field Supplied Panel
C = Remote Panel
D = Remote Panel with Night Setback

Digit 19
Ambient Control
0 = Standard
1 = 0 F

Digit 20
Agency Approval
0 = None
1 = UL
2 = CSA

Digit 21
Miscellaneous (See Note 2)
A = Unit Disconnect Switch
B = Hot Gas Bypass
C = Omit Decorative Grilles
D = High Altitude Gas Heat (CSA)
E = Low Leak Fresh Air Dampers
F = Firestat
G = High Capacity Evaporator Coil
H = Copper Fins
J = Remote Setpoint (VAV Only)
K = Zone Reset (VAV Only)
L = High Efficiency Motors
N = Inlet Vanes - Supply Fan with Control
Q = 100% Exhaust Actuator, Less Controls
R = Extended Grease Lines
T = Access Doors
U = Ship With 100% Exhaust Control
V = System Optimization
W = T.E.N.V. Condenser Fan Motors
X = Compressor Lockout Thermostat (Economizer Only)

Notes:

1. When Digit 2 indicates an "E" for electric heat, the following values apply for Digit 9.

   60 HZ Units

D = 30 KW	L = 70 KW	Q = 110 KW	U = 150 KW	
H = 50 KW	N = 90 KW	R = 130 KW	V = 170 KW	W = 190 KW

   50 HZ, 380 Volt Units

D = 31 KW	L = 69 KW	Q = 107 KW
H = 52 KW	N = 94 KW	R = 119 KW

   50 HZ, 415 Volt Units

D = 32 KW	L = 72 KW	Q = 112 KW	
H = 52 KW	N = 91 KW	R = 127 KW	U = 142 KW

2. When Digit 2 indicates "L" or "S", one of the following valve sizes must be in Digit 21 (Miscellaneous).

   1 = 1/2", 2 = 3/4", 3 = 1", 4 = 1-1/4", 5 = 1-1/2", 6 = 2".

Unit Nameplate

The unit nameplate (Figure 1) is located in the upper left-hand corner of the control box end of the unit. It lists the unit model number, electrical information, refrigerant charge and type, unit weight, and other important unit information.

Figure 1
Unit Nameplate

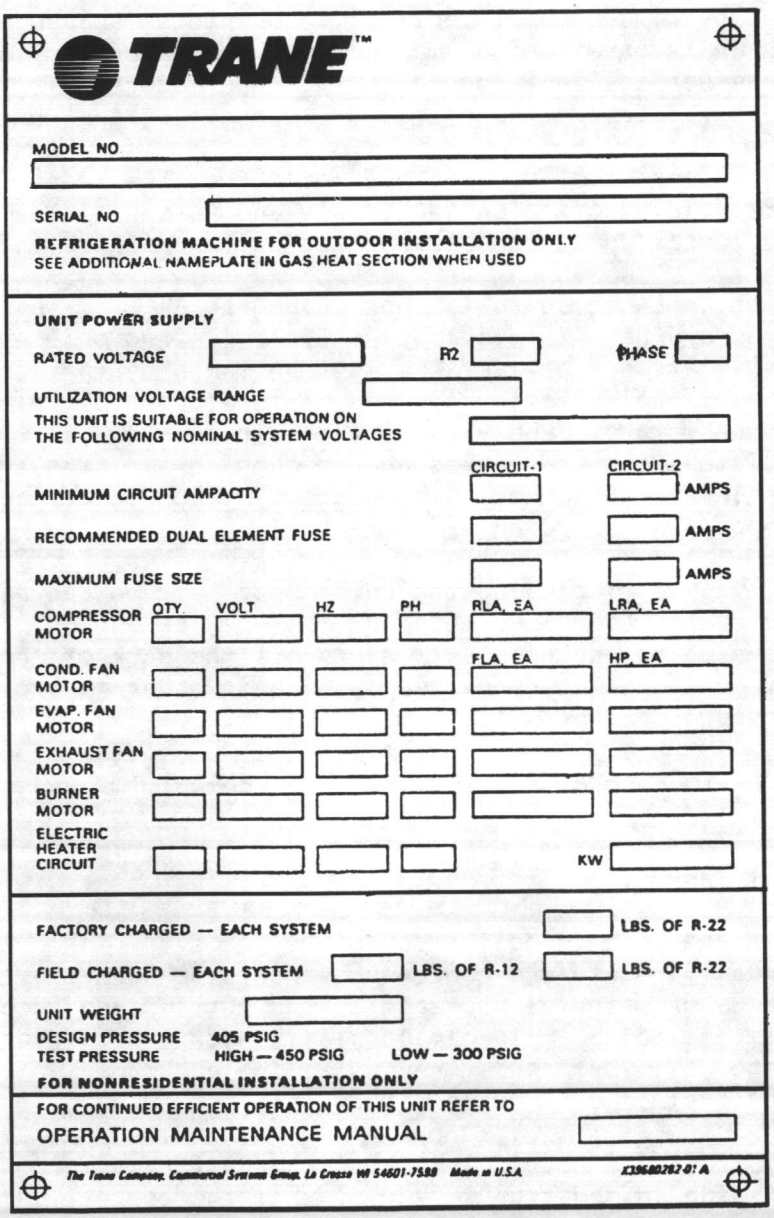

General Information

The Trane 20 through 75 ton Commercial Single-Zone Rooftop Air Conditioners (Models SAHC, SBHC, SEHC, SFHC, SLHC, SSHC and SXHC) covered by this manual are designed for Variable Air Volume applications only. The heating sections of Models SBHC, SEHC, SFHC, SLHC and SSHC are provided only for night setback or morning warm-up.

As shipped, each rooftop unit is fully assembled, with internal piping and factory wiring completed. Unit components include a hermetic compressor(s) (75 ton units have semi-hermetic Model R compressors), evaporator coil(s), condenser coil(s), condenser fans and motors, air handling supply fans, filters and a full operating charge of refrigerant and compressor oil.

An optional roof curb is available from The Trane Company for use with the Commercial Rooftop units. Supply and return air ductwork must be field supplied and installed to run between the unit roof curb and the building interior.

Note: On those installations where the unit is set on the roof curb and temporary heat is provided in the building (or the unit is in storage before installation), precautions must be taken by the installing contractor to prevent the formation of condensate within the unit electrical compartments and on the motors. Supply and return air openings must be effectively sealed off or isolated from the heated and/or outside air. The Trane Company cannot be held liable for equipment damage caused by condensate accumulation on electrical components before unit start-up.

All valves, including the compressor suction and discharge service valves, are backseated (open) as shipped. The only exception is the liquid line service valve which is shipped 1/4 turn off the backseat position. This valve must remain in an intermediate position in order to provide pressure to the fan pressure control switch at all times.

Refer to Figures 2 through 11 and Table 1 for unit dimensions and weights.

Unit Inspection

When the unit is delivered to the job site, inspect all components for damage. Manually rotate the condenser fans to be sure they revolve freely. Report any damage or material shortage to the carrier and record this information on the bill of lading. File damage claims with the carrier and notify the appropriate Trane Sales Office before installing a damaged unit. Any material shortage should also be reported directly to the Trane Sales Office.

Compare the electrical data on the unit nameplate with the ordering and shipping information to verify that the correct unit has been shipped.

The appropriate service literature is attached to the back of the unit control panel door. Before unit start-up, be sure to read the provided literature to become familar with the unit and its operation.

Figure 2
SAHC C20 and C25
Unit Dimensions

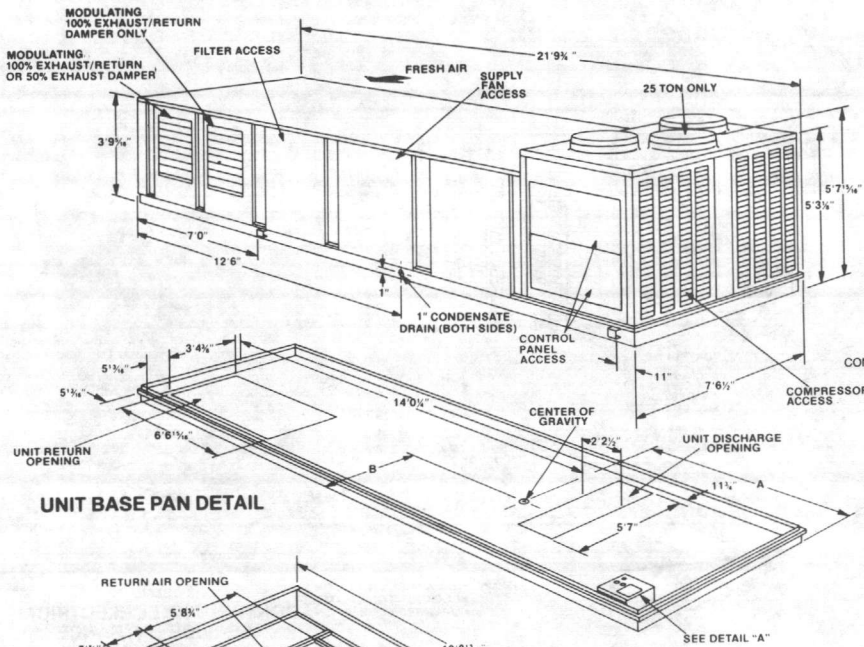

UNIT BASE PAN DETAIL

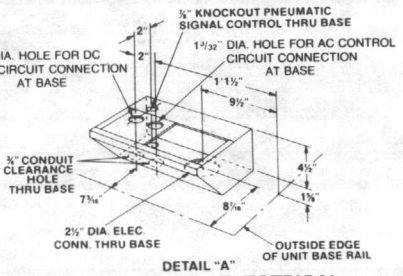

CONTROL PANEL ELECTRICAL SERVICE ENTRANCE

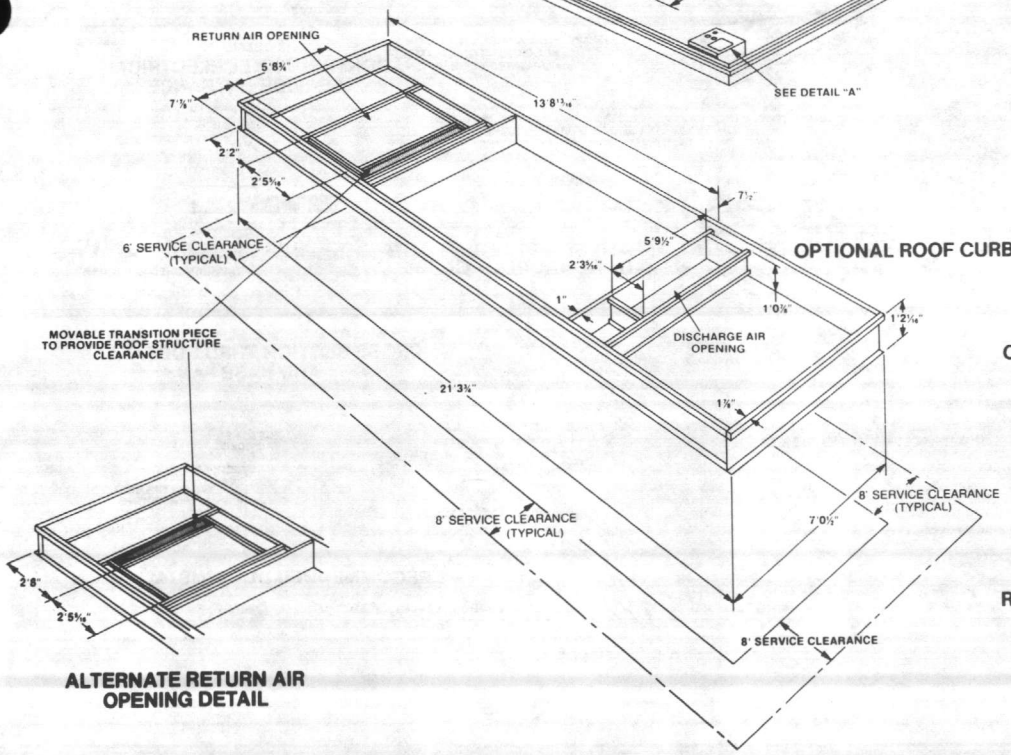

OPTIONAL ROOF CURB

ALTERNATE RETURN AIR OPENING DETAIL

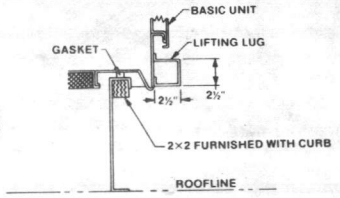

CROSS SECTION THRU ROOF CURB AND BASE PAN

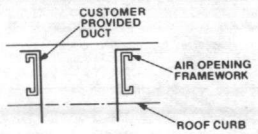

RECOMMENDED DUCT INSTALLATION

Figure 3
SBHC, SEHC, SFHC, SLHC,
SSHC and SXHC C20 and C25
Unit Dimensions

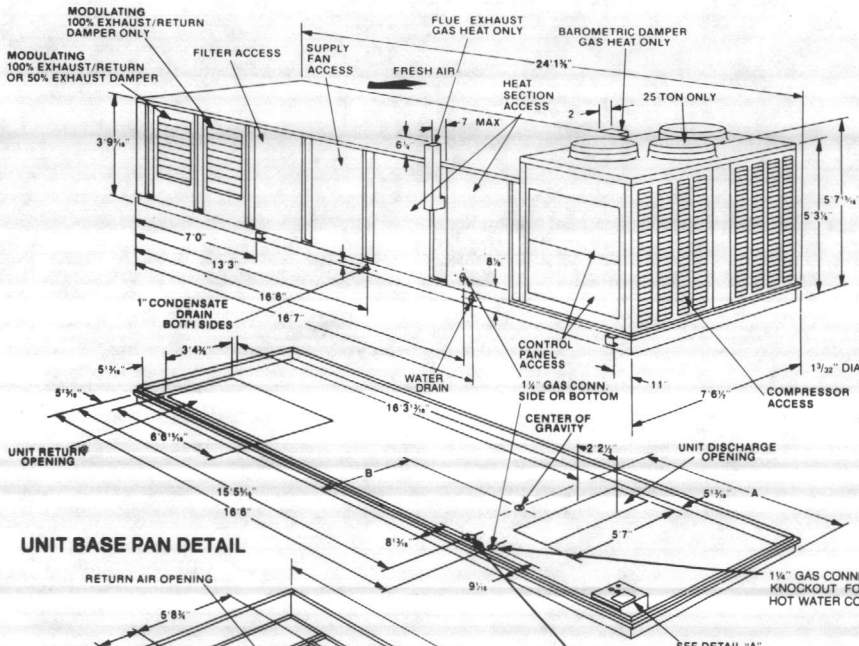

UNIT BASE PAN DETAIL

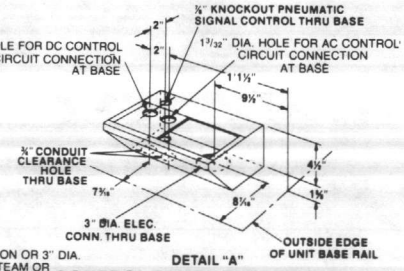

CONTROL PANEL ELECTRICAL SERVICE ENTRANCE

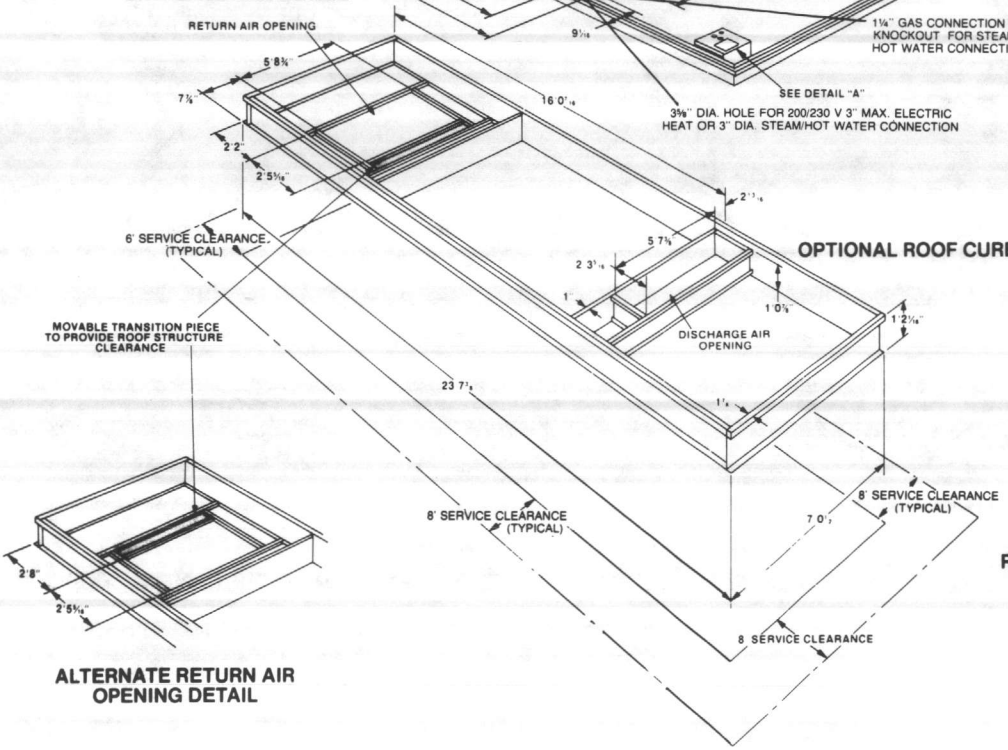

OPTIONAL ROOF CURB

ALTERNATE RETURN AIR OPENING DETAIL

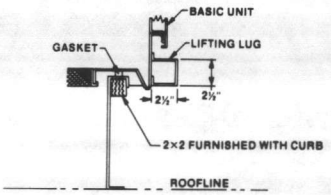

CROSS SECTION THRU ROOF CURB AND BASE PAN

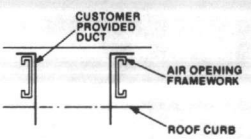

RECOMMENDED DUCT INSTALLATION

Figure 4
SAHC C30
Unit Dimensions

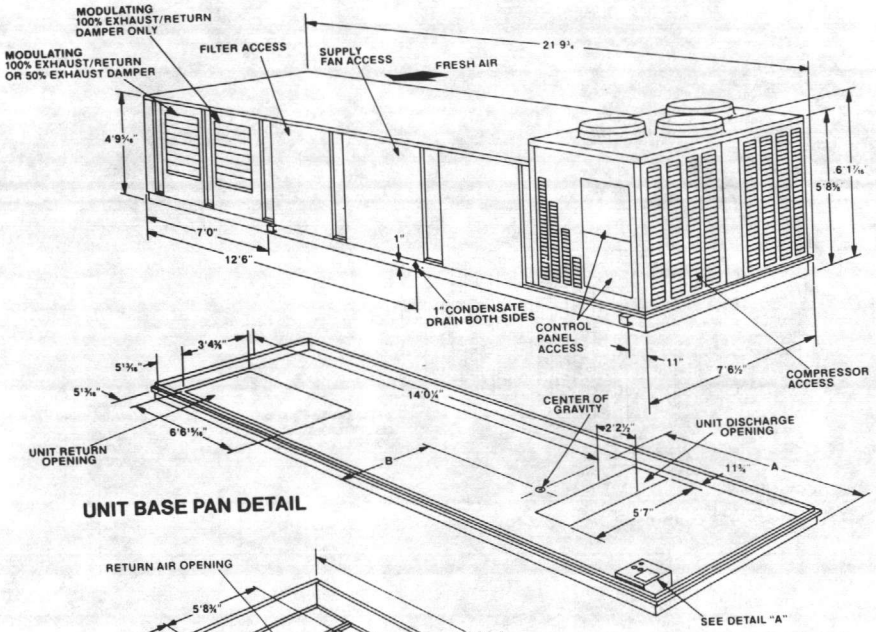

UNIT BASE PAN DETAIL

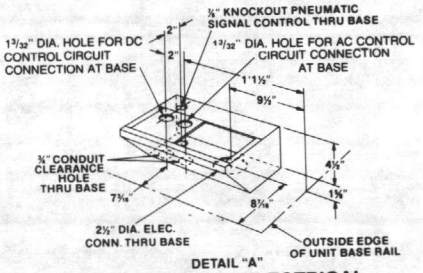

CONTROL PANEL ELECTRICAL SERVICE ENTRANCE

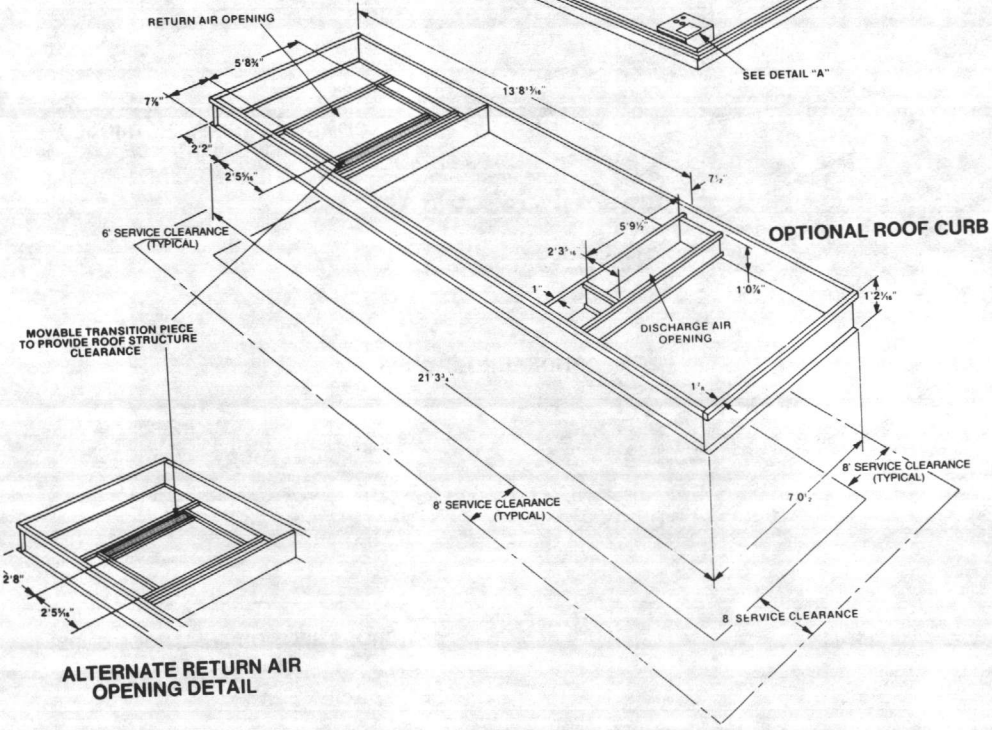

OPTIONAL ROOF CURB

ALTERNATE RETURN AIR OPENING DETAIL

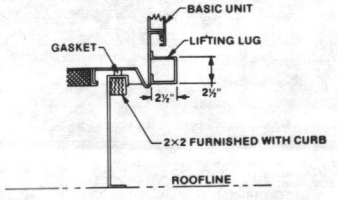

CROSS SECTION THRU ROOF CURB AND BASE PAN

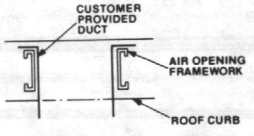

RECOMMENDED DUCT INSTALLATION

Figure 5
SBHC, SEHC, SFHC, SLHC,
SSHC and SXHC C30
Unit Dimensions

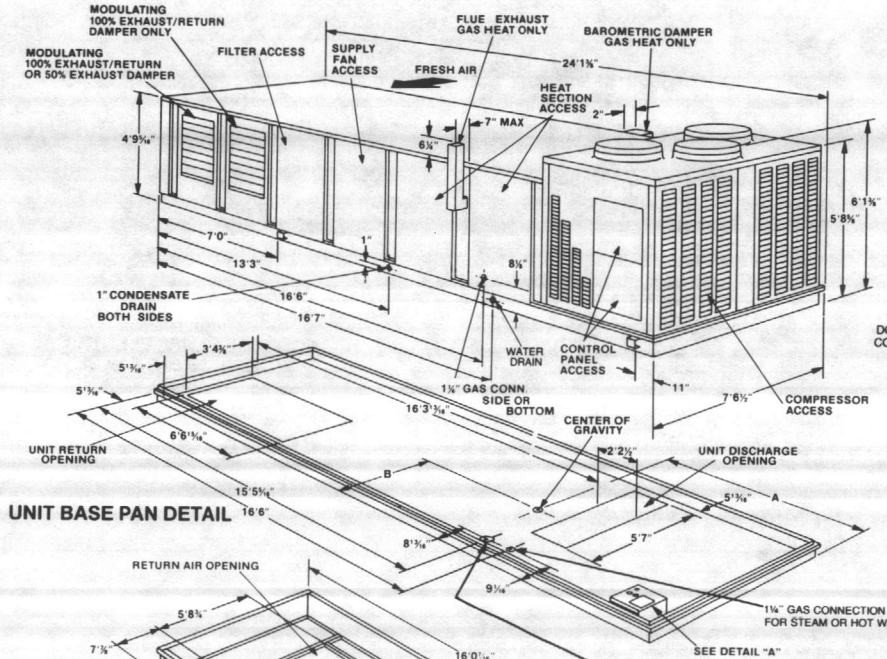

UNIT BASE PAN DETAIL

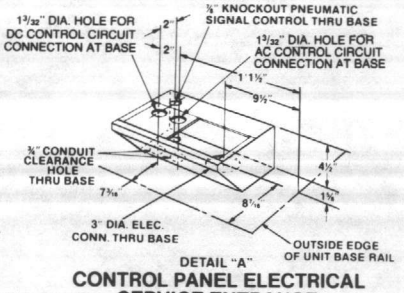

CONTROL PANEL ELECTRICAL SERVICE ENTRANCE

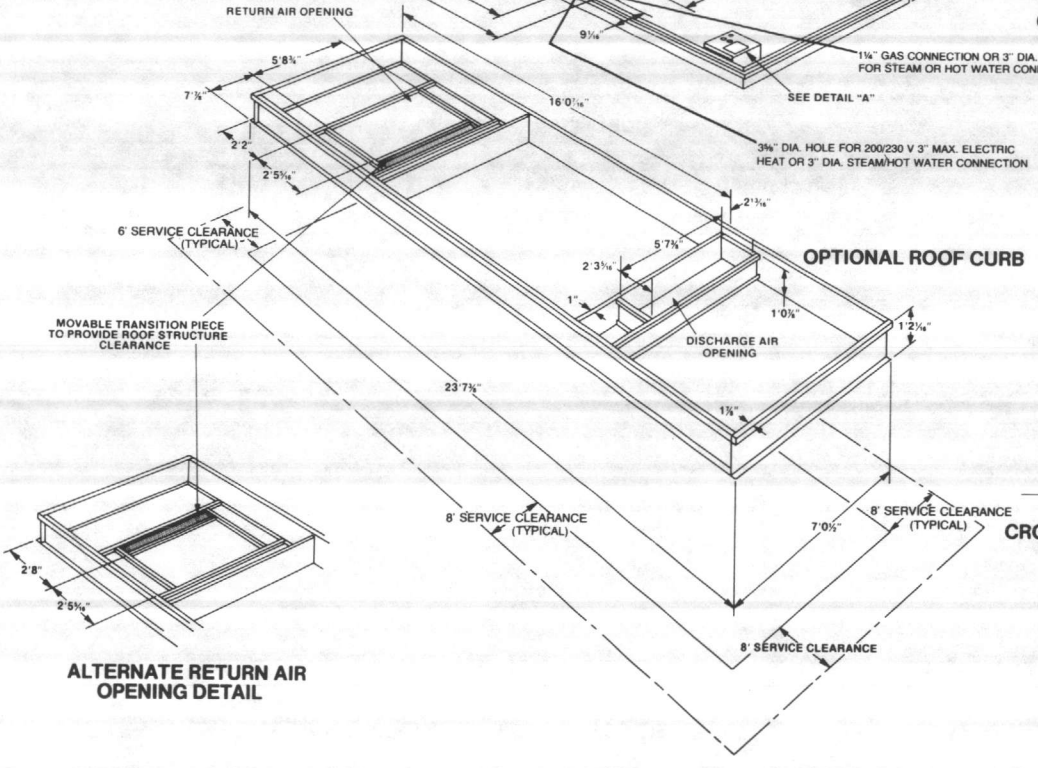

OPTIONAL ROOF CURB

ALTERNATE RETURN AIR OPENING DETAIL

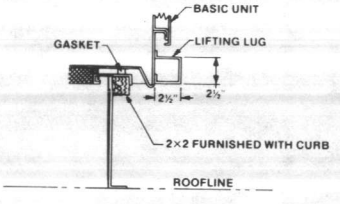

CROSS SECTION THRU ROOF CURB AND BASE PAN

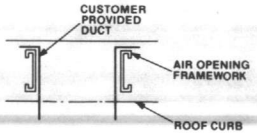

RECOMMENDED DUCT INSTALLATION

Figure 6
SAHC C40
Unit Dimensions

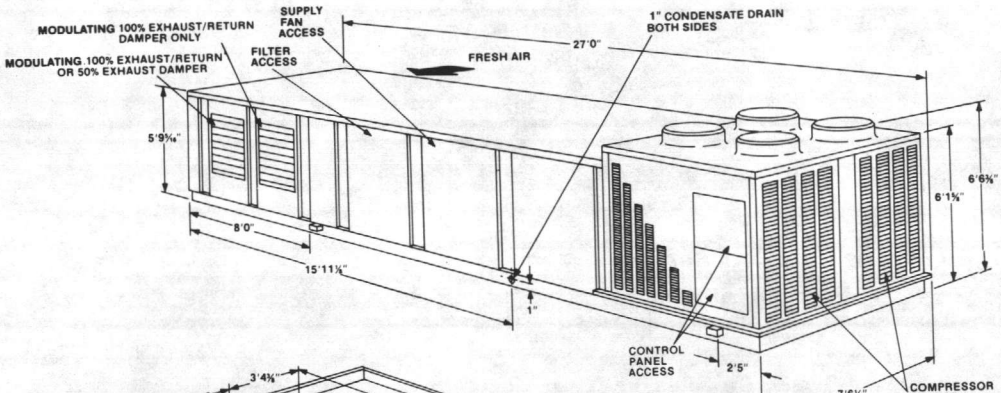

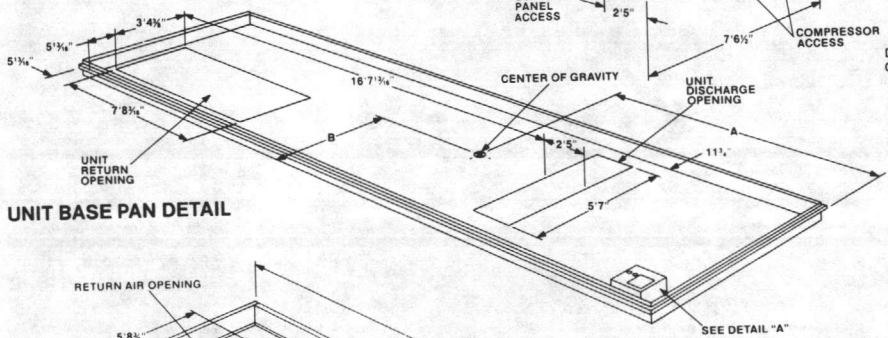

UNIT BASE PAN DETAIL

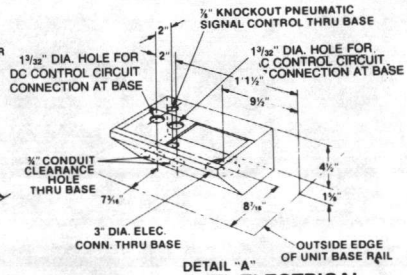

DETAIL "A"

CONTROL PANEL ELECTRICAL SERVICE ENTRANCE

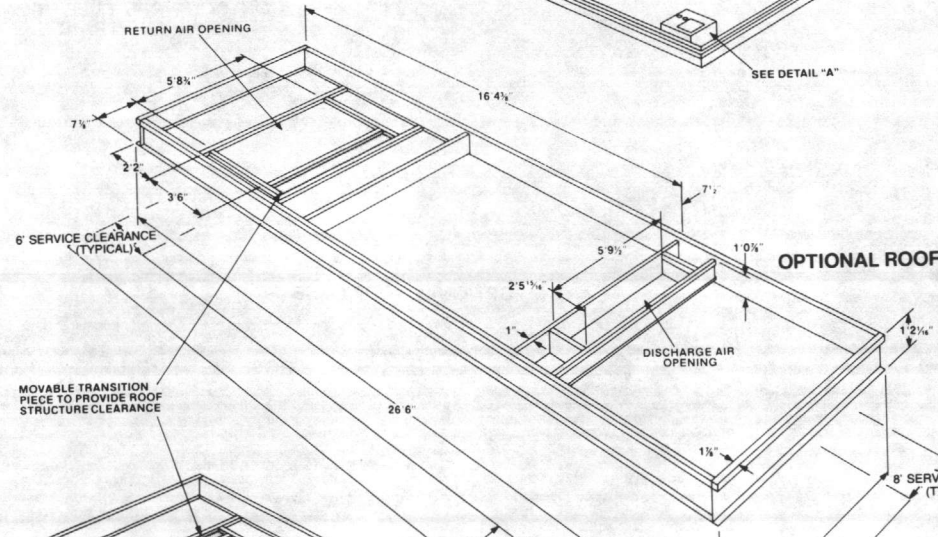

OPTIONAL ROOF CURB

ALTERNATE RETURN AIR OPENING DETAIL

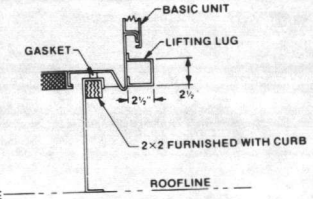

CROSS SECTION THRU ROOF CURB AND BASE PAN

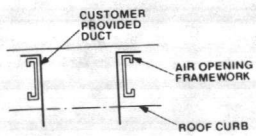

RECOMMENDED DUCT INSTALLATION

Figure 7
SBHC, SEHC, SFHC, SLHC,
SSHC and SXHC C40
Unit Dimensions

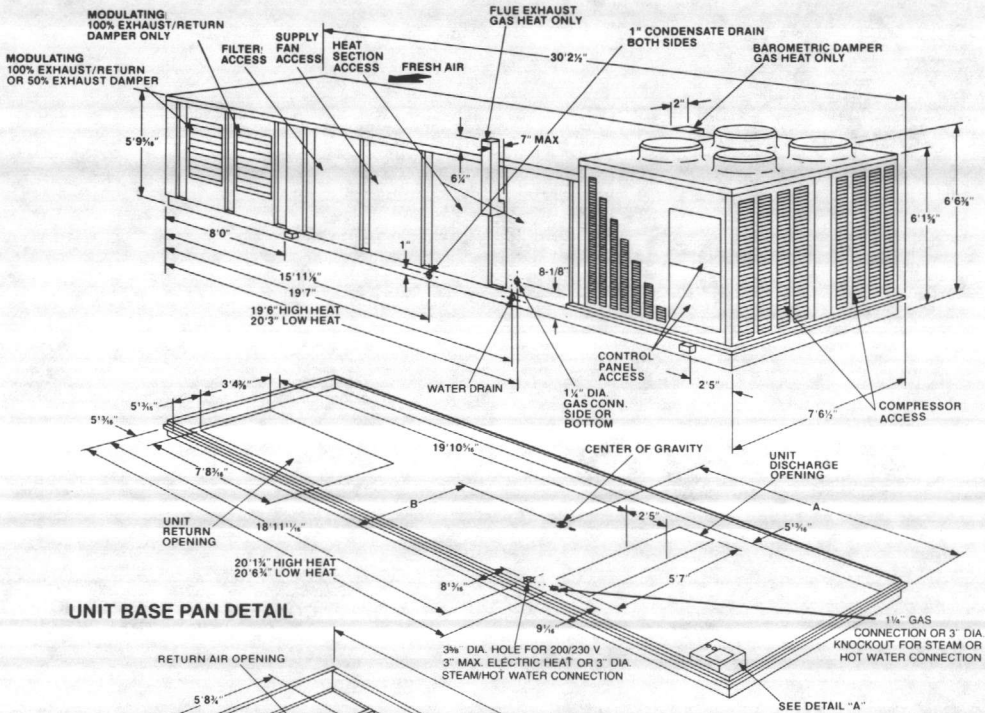

UNIT BASE PAN DETAIL

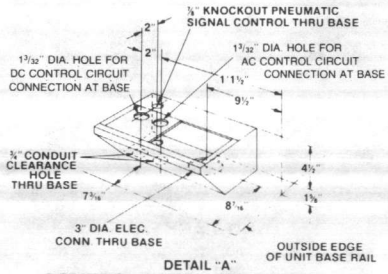

CONTROL PANEL ELECTRICAL SERVICE ENTRANCE

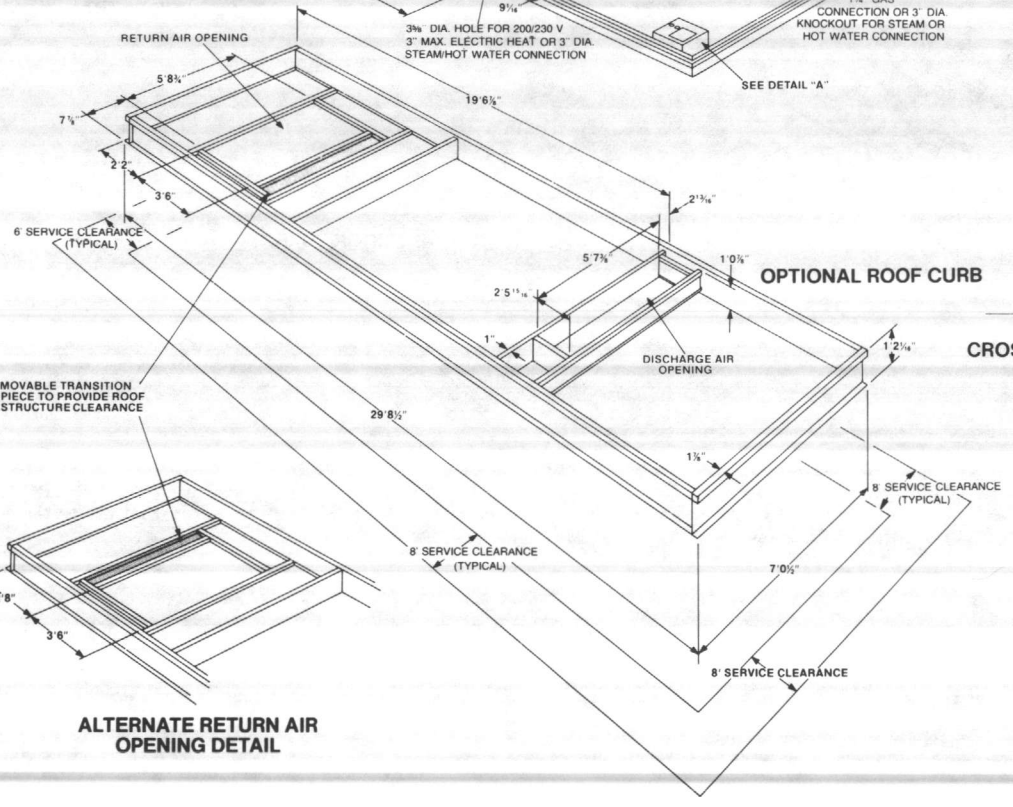

OPTIONAL ROOF CURB

ALTERNATE RETURN AIR OPENING DETAIL

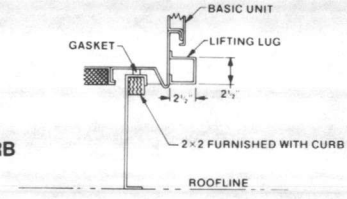

CROSS SECTION THRU ROOF CURB AND BASE PAN

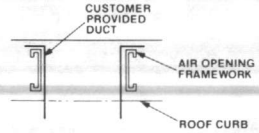

RECOMMENDED DUCT INSTALLATION

Figure 8
SAHC C50 and C55
Unit Dimensions

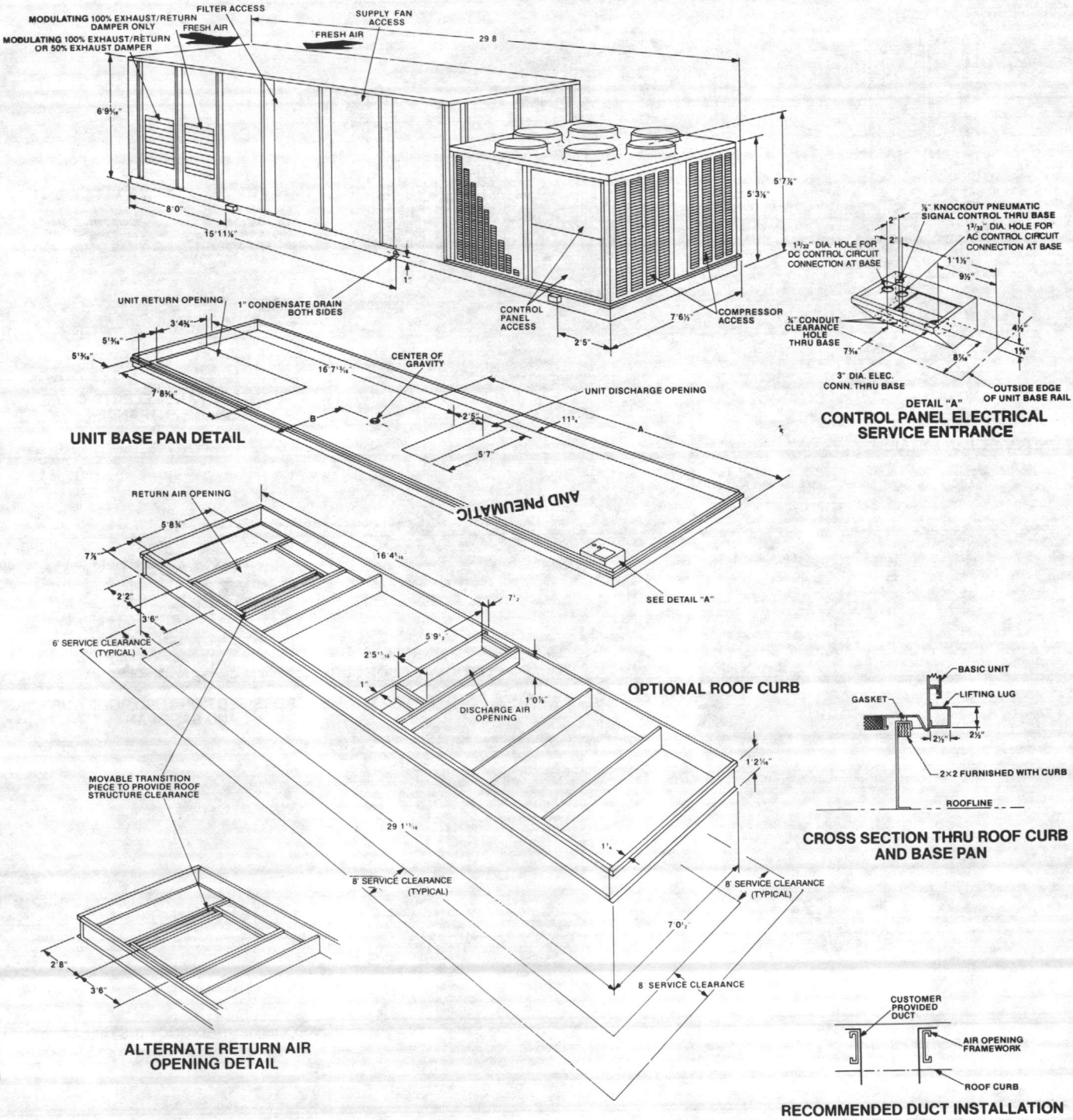

Figure 9
SBHC, SEHC, SFHC, SLHC,
SSHC and SXHC C50 and C55
Unit Dimensions

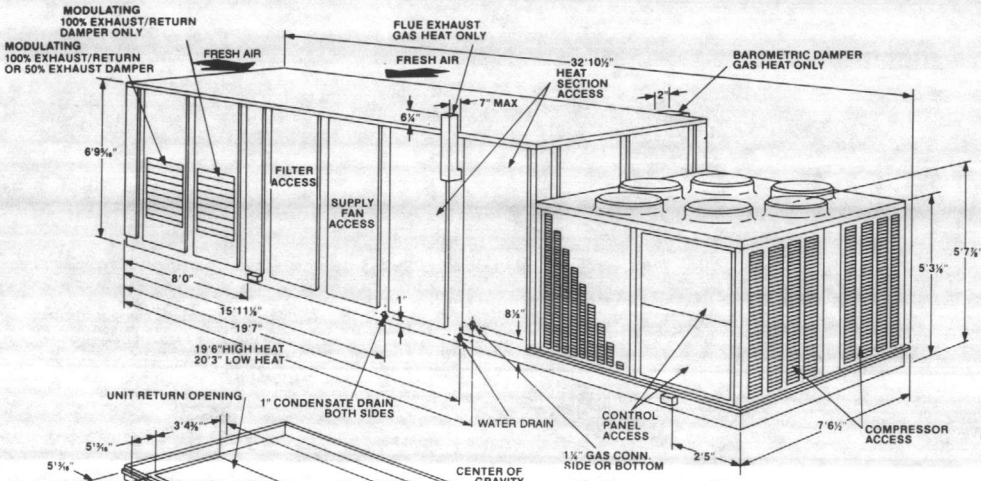

UNIT BASE PAN DETAIL

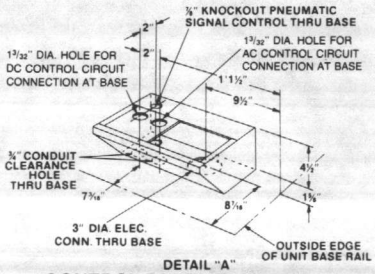

DETAIL "A"
CONTROL PANEL ELECTRICAL
SERVICE ENTRANCE

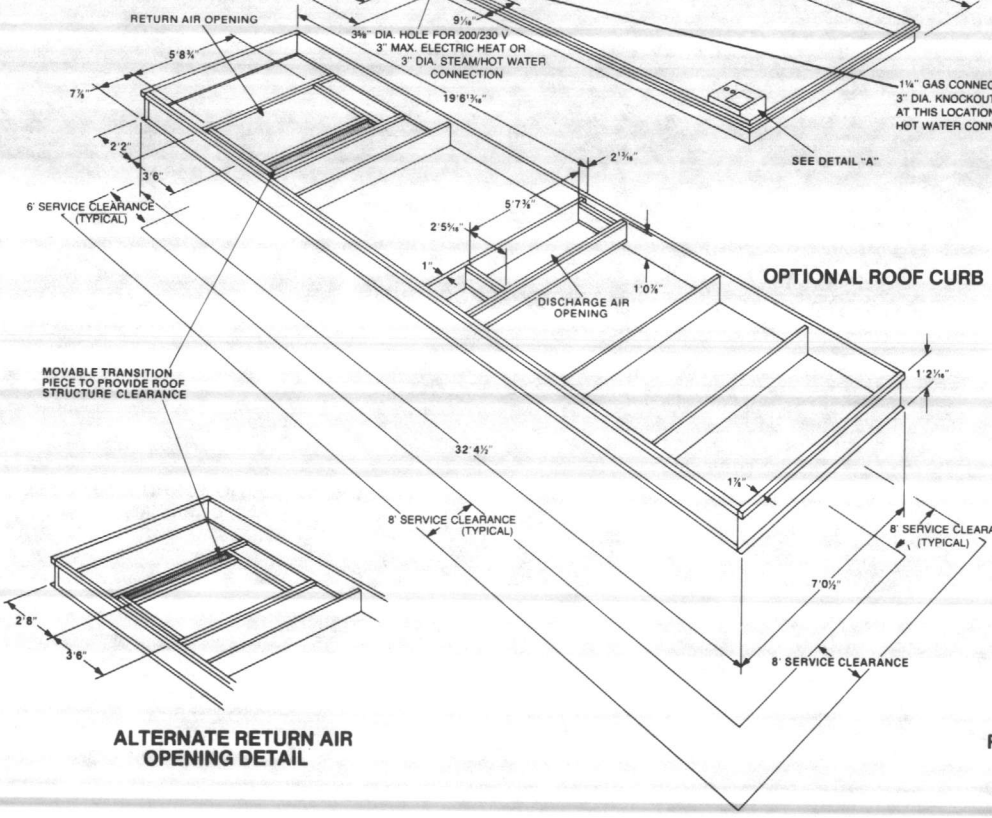

OPTIONAL ROOF CURB

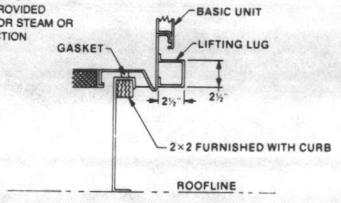

CROSS SECTION THRU ROOF CURB
AND BASE PAN

ALTERNATE RETURN AIR
OPENING DETAIL

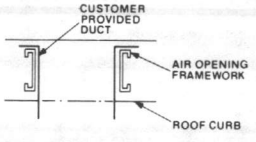

RECOMMENDED DUCT INSTALLATION

Figure 10
SAHC C60 and C75
Unit Dimensions

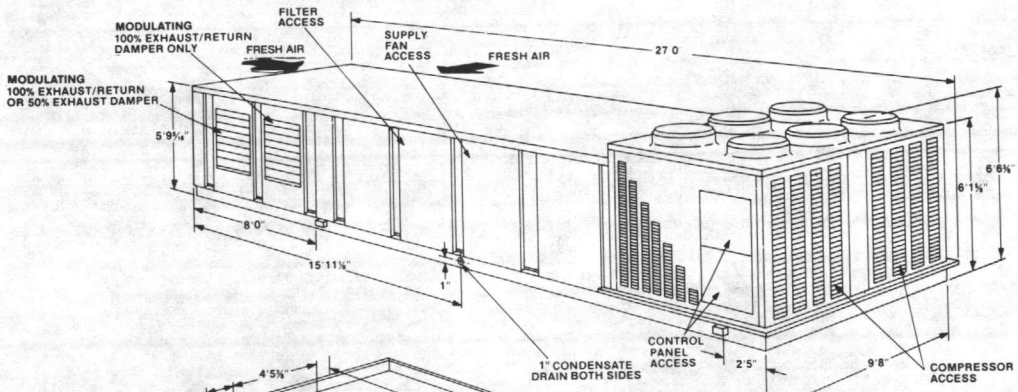

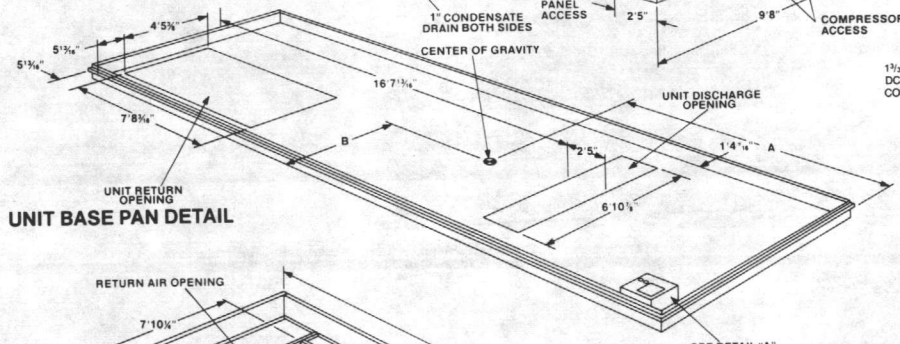

UNIT BASE PAN DETAIL

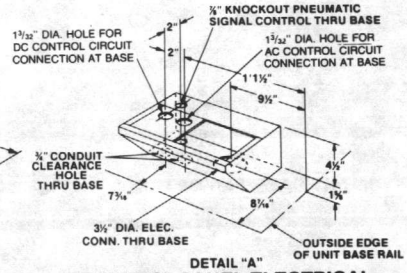

CONTROL PANEL ELECTRICAL SERVICE ENTRANCE

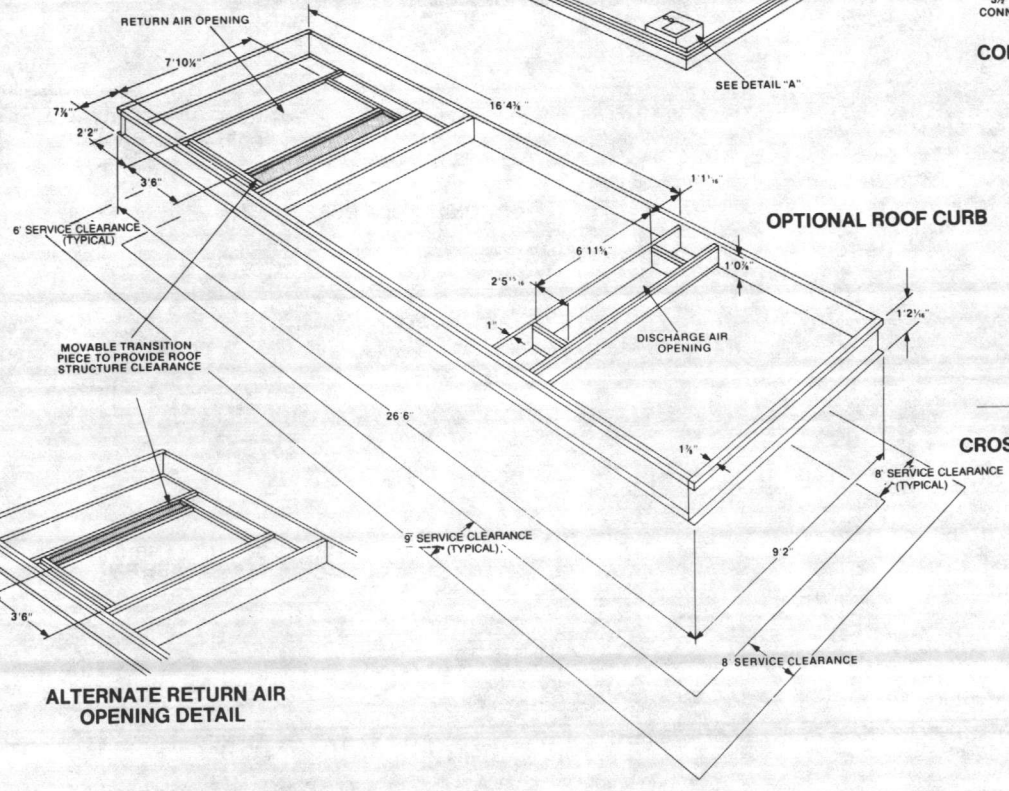

OPTIONAL ROOF CURB

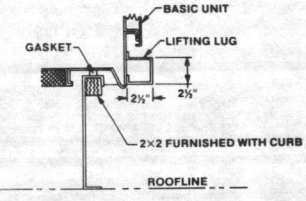

CROSS SECTION THRU ROOF CURB AND BASE PAN

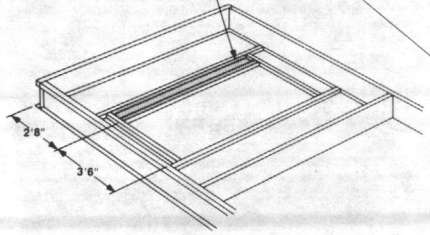

ALTERNATE RETURN AIR OPENING DETAIL

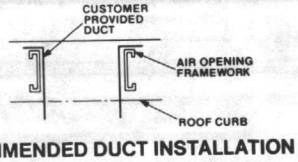

RECOMMENDED DUCT INSTALLATION

Figure 11
SBHC, SEHC, SFHC, SLHC,
SSHC and SXHC C60 and C75
Unit Dimensions

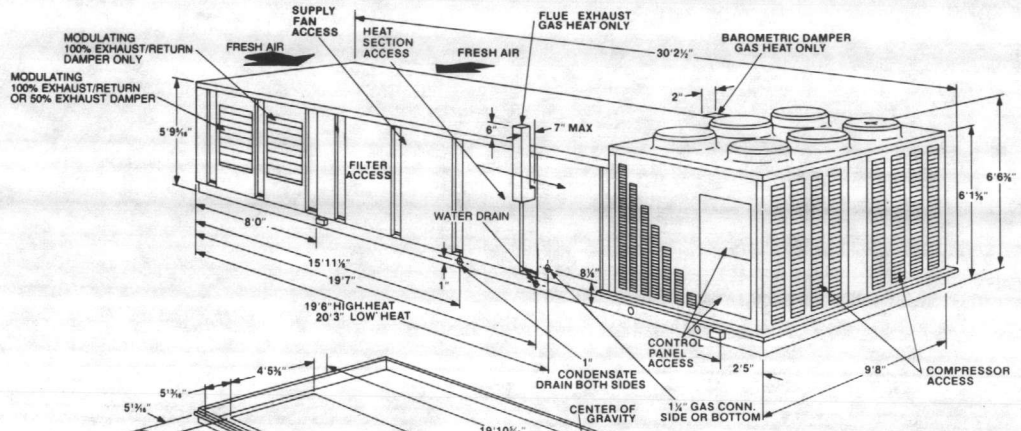

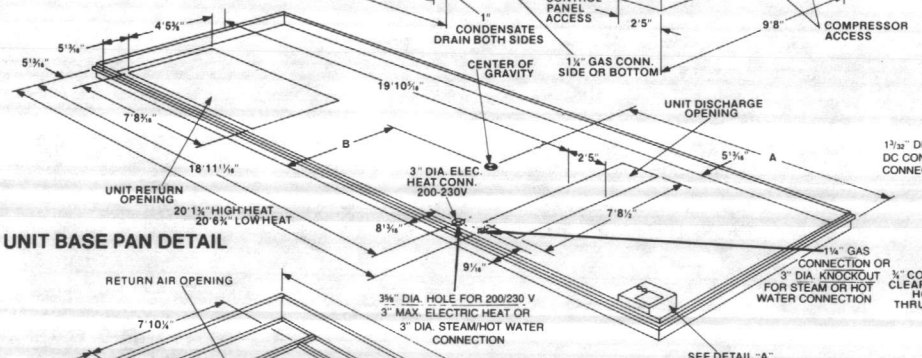

UNIT BASE PAN DETAIL

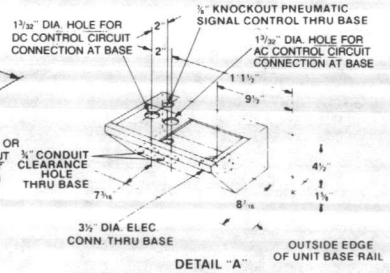

CONTROL PANEL ELECTRICAL SERVICE ENTRANCE

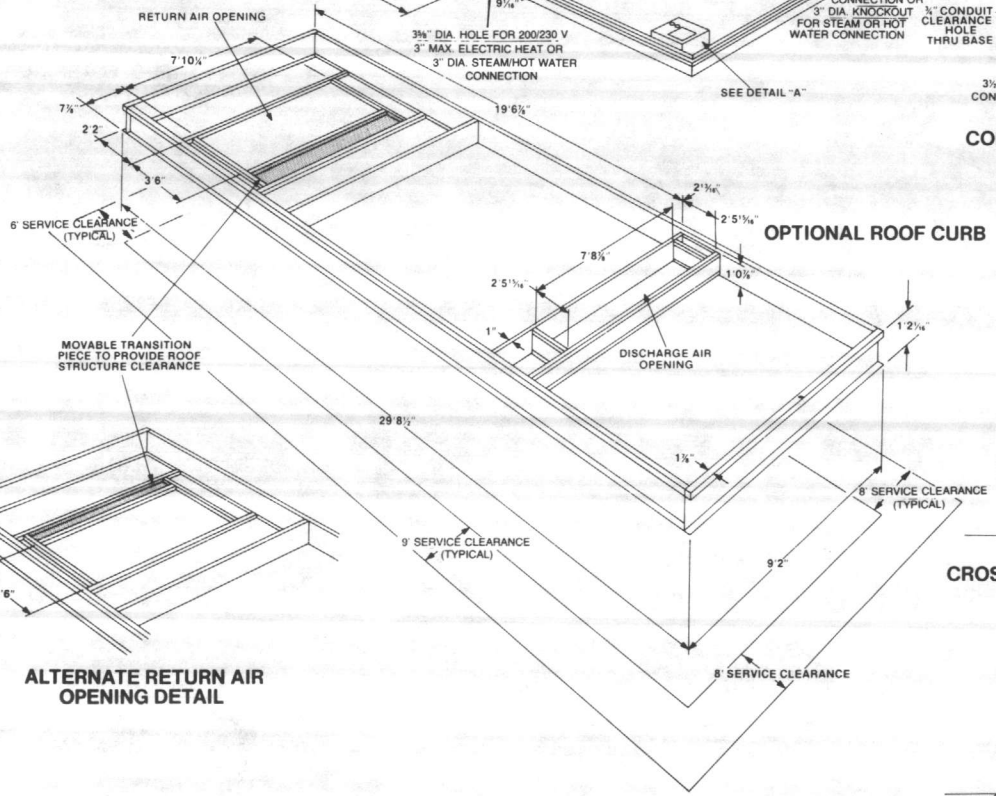

OPTIONAL ROOF CURB

ALTERNATE RETURN AIR OPENING DETAIL

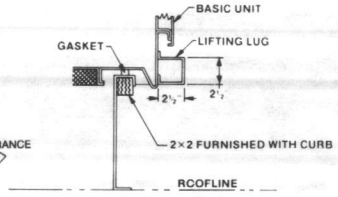

CROSS SECTION THRU ROOF CURB AND BASE PAN

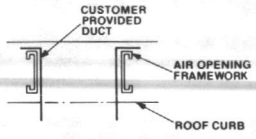

RECOMMENDED DUCT INSTALLATION

Table 1
Maximum Unit
Operating Weights

Unit Size	SAHC	Weight (lbs.) SBHC, SFHC	Weight (lbs.) SEHC, SLHC, SSHC, SXHC
C20	4600	5250	4950
C25	4700	5300	5050
C30	5500	6200	6050
C40	7500	8500	8200
C50	8350	9200	9100
C55	8500	9350	9200
C60	9600	10400	10300
C75	10500	11300	11200

Note: Actual units weights are stamped on the unit nameplate.

Roof Curb

The location of the roof curb (optional) and the clearances around the unit are very important when planning unit installation. Follow the detailed installation instructions provided with the roof curb to be sure of proper fit-up when the unit is set into place.

Supply and Return Air Ductwork

Supply and return air flanges are provided on the roof curb. All ductwork must be run and attached to the roof curb before setting the unit into place. Ductwork for all units is to be fabricated and installed by the installing contractor. Refer to the instructions provided with the roof curb.

Clearances

The recommended clearances for single and multiple unit installations are illustrated in Figures 12 and 13. These minimum requirements are essential to insure adequate serviceability, maximum capacity and peak operating efficiency.

A reduction in unit clearance may result in condenser coil starvation, or the recirculation of warm condenser air. Actual clearances which appear to be inadequate should be reviewed with a local Trane sales engineer.

Figure 12
Unit Clearances for
Single Unit Installations

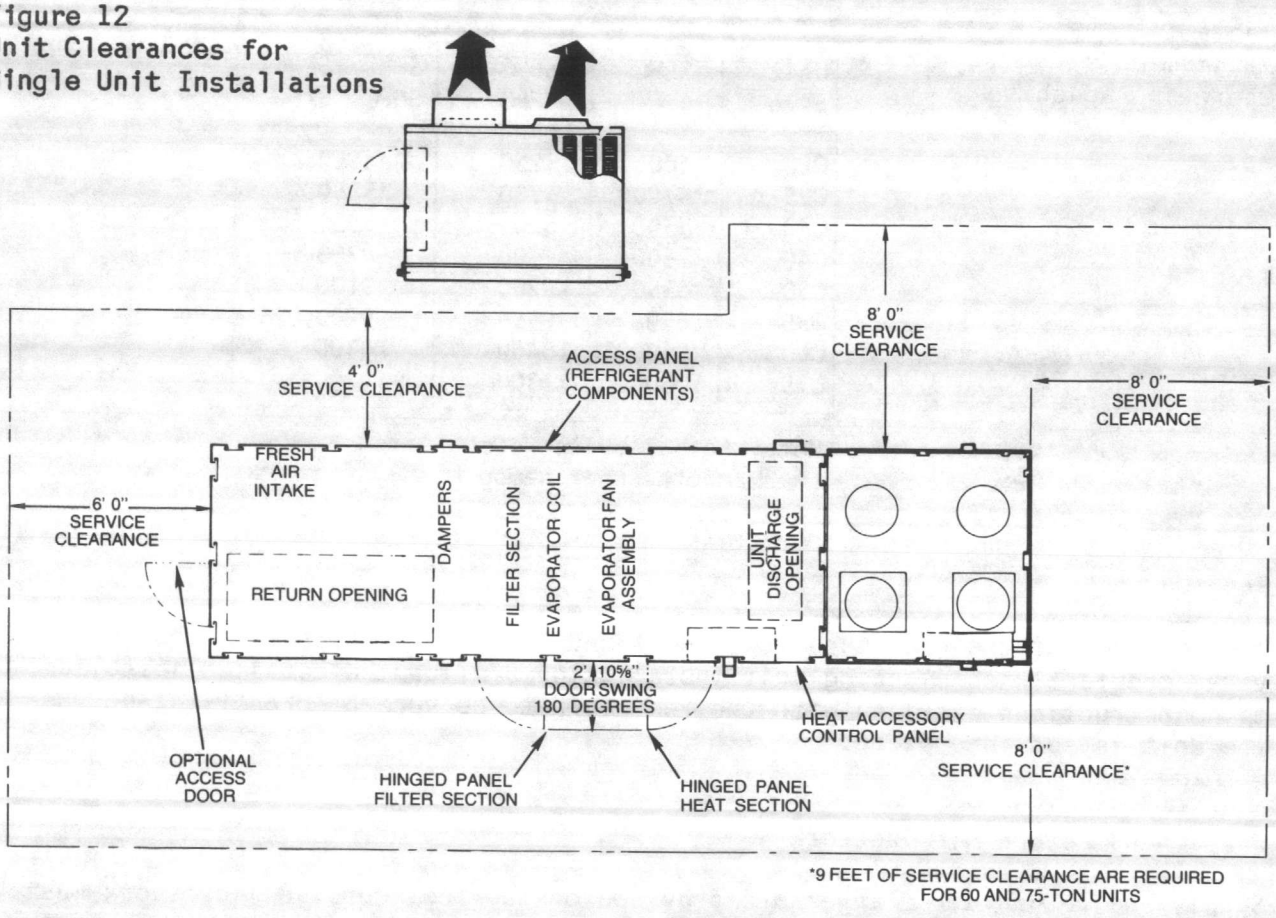

Figure 13
Unit Clearances for
Multiple Unit Installations

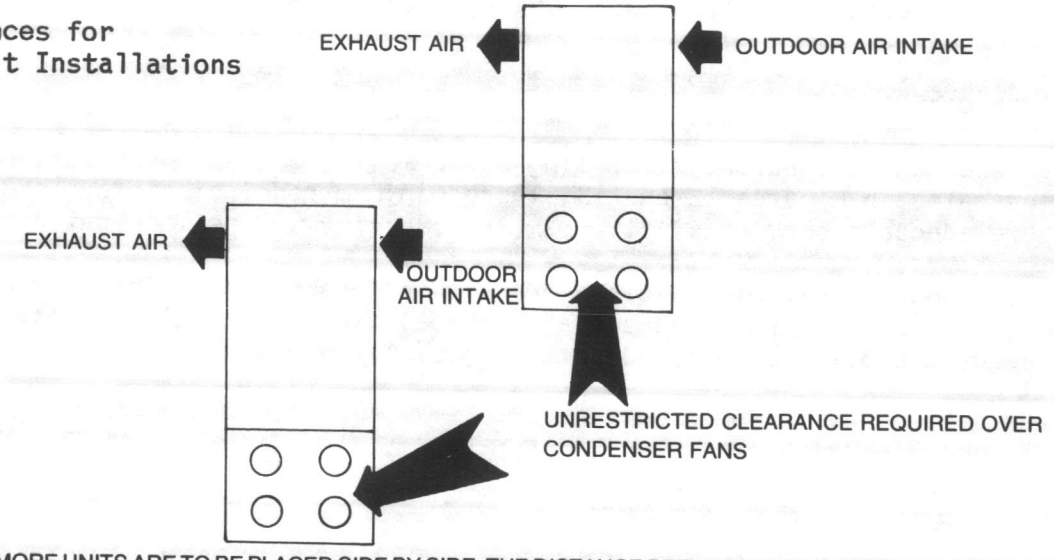

NOTE: WHEN TWO OR MORE UNITS ARE TO BE PLACED SIDE BY SIDE, THE DISTANCE BETWEEN THE UNITS SHOULD BE INCREASED TO 150 PERCENT OF THE RECOMMENDED SINGLE-UNIT CLEARANCE (SEE FIGURE 12). THE UNITS ALSO SHOULD BE STAGGERED AS SHOWN ABOVE TO —

1. MINIMIZE SPAN DEFLECTION IF MORE THAN ONE UNIT IS PLACED ON A SINGLE SPAN. MINIMIZING DEFLECTION DISCOURAGES SOUND TRANSMISSION.
2. ASSURE PROPER DIFFUSION OF EXHAUST AIR BEFORE CONTACT WITH THE OUTSIDE AIR INTAKE OF ADJACENT UNIT.

Setting the Unit

Adhesive-backed gasketing is provided with the roof curb and is to be applied around the perimeter of the supply and return air openings. Factory-applied gasketing is provided at the bottom of the unit base rail.

Be sure that the unit is set level to assure proper condensate flow during unit operation. As a maximum, all units (except those with steam heating coils) may slope 4 inches end-to-end or 2 inches side-to-side. Units with steam heating coils must be set level. The top mounting surface of the roof curb must be true to provide an acceptable sealing surface for the unit. Before setting the unit on the curb, check the installed curb to be sure it is level and square. Also check the length and width dimensions.

Lift the unit over the roof curb and lower it into position after checking the unit base rail gasket. See Figure 14. When lowering the unit, be sure the gasketing remains intact.

Rigging

WARNING: LIFT UNIT ONLY AT DESIGNATED LIFTING POINTS TO PREVENT INJURY, DEATH, OR EQUIPMENT DAMAGE.

WARNING: DO NOT LIFT UNIT WITHOUT TEST-LIFTING FOR BALANCE AND RIGGING TO PREVENT INJURY, DEATH, OR EQUIPMENT DAMAGE.

Figure 15 illustrates the proper method of rigging the unit. Cable slings must be attached to lifting lugs on the unit base and spreader bars must be used to insure uniform lift and to protect the unit. The point where the slings meet the lifting hook must be at least 7 feet above the top of the unit. Unit weights and center of gravity information are given in Table 1 and Figure 16.

Figure 14
Factory Applied
Base Rail Gasketing

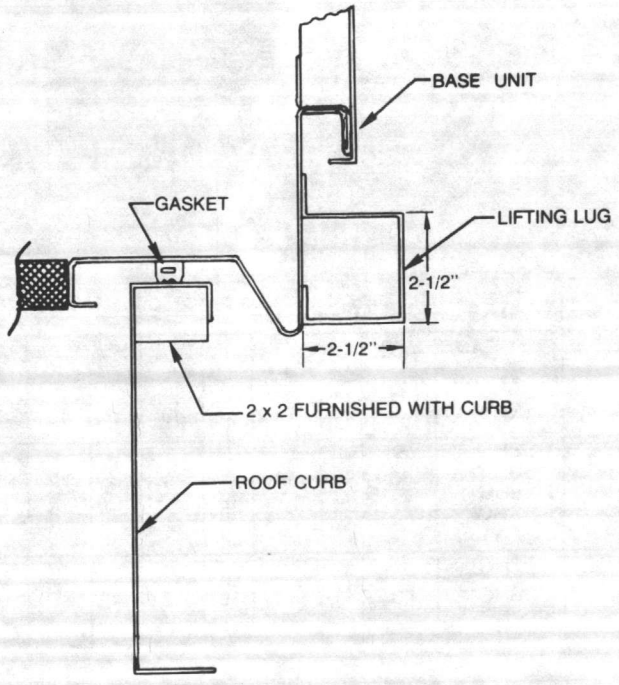

Figure 15
Unit Rigging

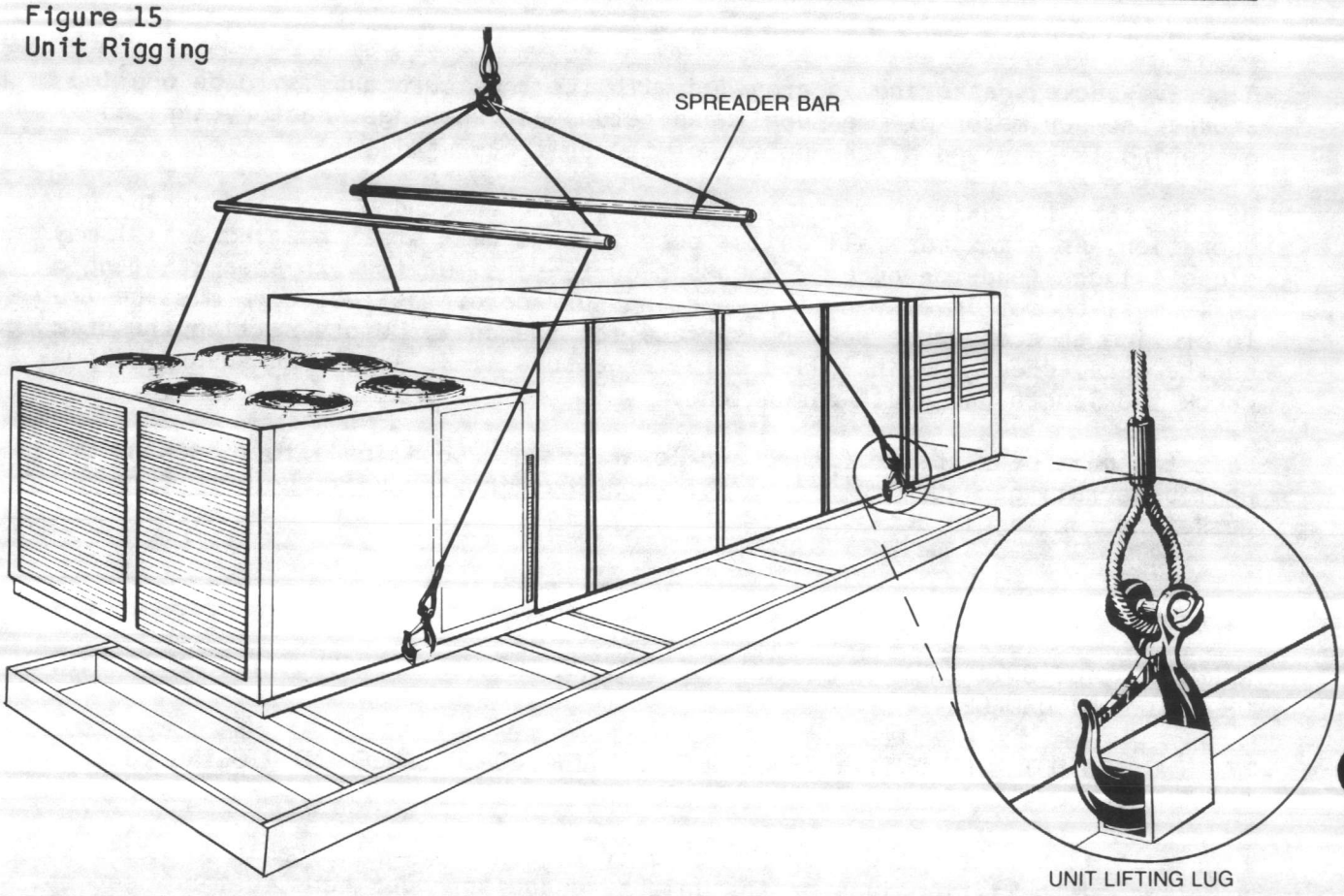

Figure 16
Unit Center of
Gravity Location

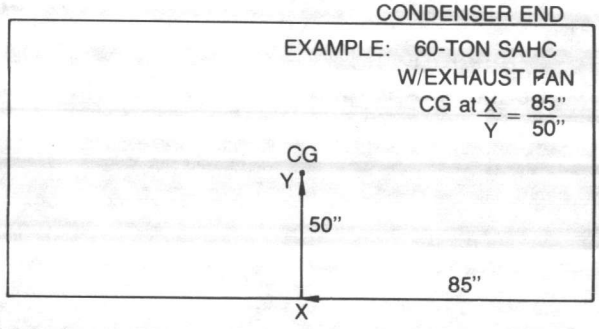

SIZE	C20		C25		C30		C40		C50		C55		C60		C75	
EXH. FAN	W/O	W	W/O	W	W/O	W	W/O	W	W/O	W	W/O	W	W/O	W	W/O	W
SAHC (X/Y)	45/39	71/37	44/40	71/37	48/40	73/37	56/45	82/43	70/46	95/44	69/46	95/44	57/52	85/50	52/52	77/49
SEHC SSHC SLHC SXHC (X/Y)	56/41	80/39	56/41	81/39	59/41	82/39	72/46	97/44	89/46	112/45	78/46	103/45	75/54	100/52	69/54	90/52
SFHC SBHC (X/Y)	61/43	82/41	62/42	84/40	64/42	84/40	77/46	99/44	93/47	114/45	97/47	119/45	78/52	101/50	72/52	93/50

Condensate Drain Connections

Commercial Rooftop Units have six drain connections as shown in Figure 17.

If it is required for job conditions or to meet code requirements, drain lines may be run to the evaporator section drain connections. Drain seals or traps are necessary at these connections to prevent draw-through of air and moisture. The unused evaporator section drain connections must be capped. If required, run the lines to a waste system in accordance with local codes. Drain lines must be pitched at least 1/2-inch per 10 feet of horizontal run.

Compressor Cap Screws and Spacer Angles (75-Ton Units Only)

Loosen the cap screw on each of the compressor feet on 75 ton units with Model R compressors. Leave the loosened cap screw and nut in each compressor foot. The shipping spacer angles must also be removed from beneath the compressor feet so that the compressor rides on the isolator pads. Refer to Figure 18 for an illustration of the shipping and operating positions of the compressor feet.

Supply and (Optional) Exhaust Air Fan Shipping Isolators

Fan assemblies with motors larger than 5 horsepower are provided with isolators. They are also provided with shipping channels. Fan assemblies with motors 5 horsepower or less, typically do not have isolators, and the channels used in these units must not be removed when the unit is installed.

Figure 17
Unit Drain
Connections

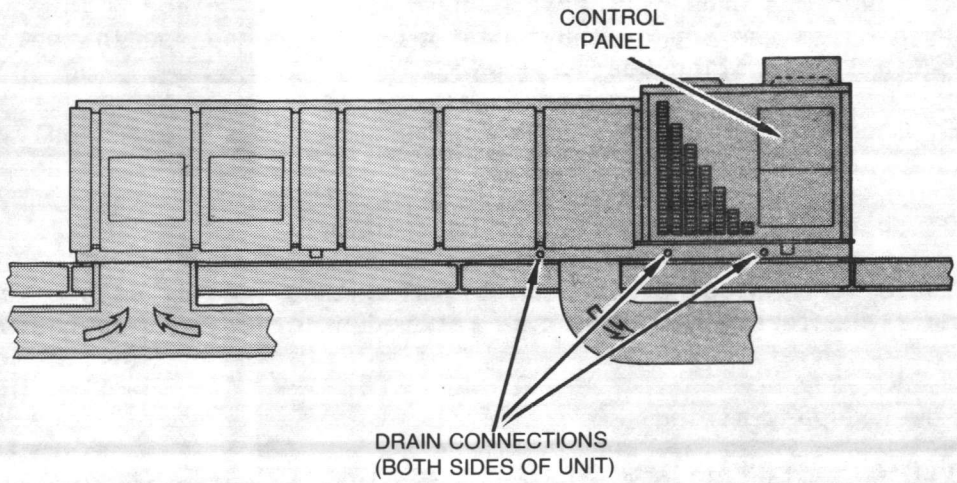

Figure 18
Model R Compressor Foot
Shipping and Operating Positions

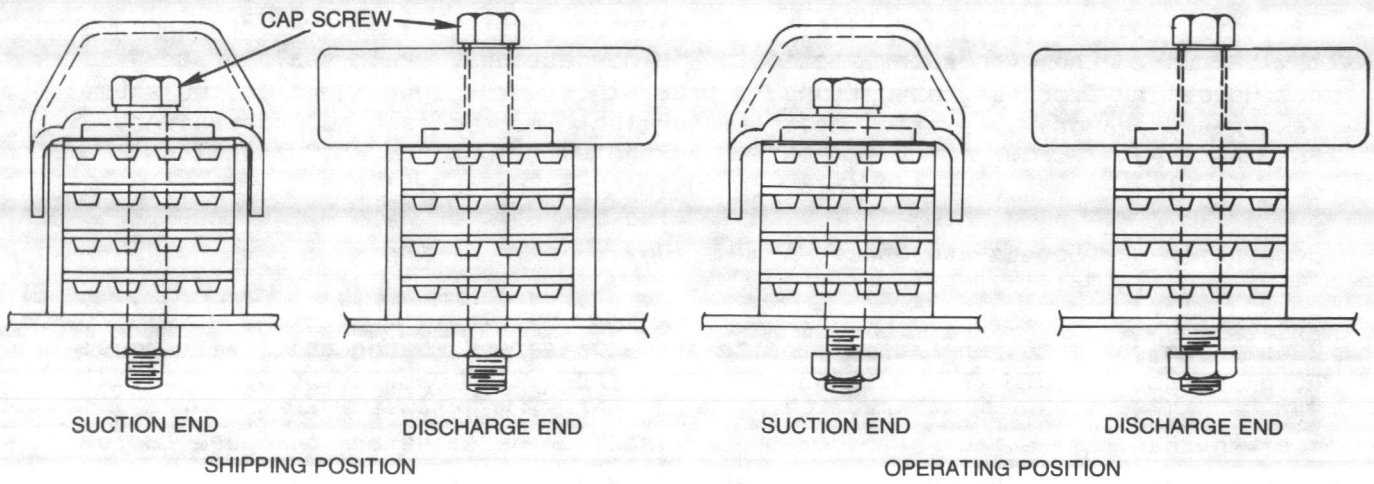

On units with motors that have isolators, the shipping channels must be removed as follows:

1. Remove the shipping hold-down bolts.

2. Raise the fan and motor mounting board.

3. Slide the shipping channels out from under the mounting board.

4. Lower the ends of the fan and motor mounting board into the isolators. The pins at the top of the isolators must be engaged in the corresponding holes in the mounting board.

5. Check to be sure that the fan assembly is supported only by the isolators.

Discharge Line Clamps (75 Ton Units Only)

There is a shipping clamp on the discharge line of each circuit near the muffler. These clamps must be removed prior to unit operation.

Power Supply Wiring

All field installed wiring must comply with National Electrical Code (NEC) and all applicable local codes. N.E.C. (1984) states that "a disconnecting means shall be located within sight from and readily accessible from the air conditioning or refrigerating equipment."

All 20 through 75 ton units (except those with 200 or 230 volt electric heat sections) have a single power connection at the unit control box. Units with 200 or 230 volt electric heat require a second power supply for the electric heat section.

These units are intended to be protected against short circuit or ground fault conditions by fuses. To comply with National Electrical Code requirements, fuses must be sized according to the "Maximum Fuse Size" and/or "Recommended Dual Element Fuse Size" information on the unit nameplate. Each of the two circuits of a 200 or 230 volt unit with electric heat must be fused separately.

A factory-mounted, non-fused disconnect switch is available as an option on all 20 through 75 ton units. When a unit is equipped with this disconnect, the unit power supply wiring is brought up through the bottom of the unit to the unit control panel, and is connected to the disconnect switch (1S14). Units with 200 or 230 volt electric heat sections will also be provided with a disconnect switch for its separate power supply wiring.

When a field-supplied disconnect switch is used, a separate disconnect switch must be provided for the power supply wiring of 200 or 230-volt electric heat sections.

Figure 19 shows power supply wiring and Figure 20 illustrates the power supply connections.

CAUTION: Use only copper conductors for terminal connections to avoid corrosion or overheating.

Figure 19
Power Supply Wiring
(With Field Installed
Disconnect Switch)

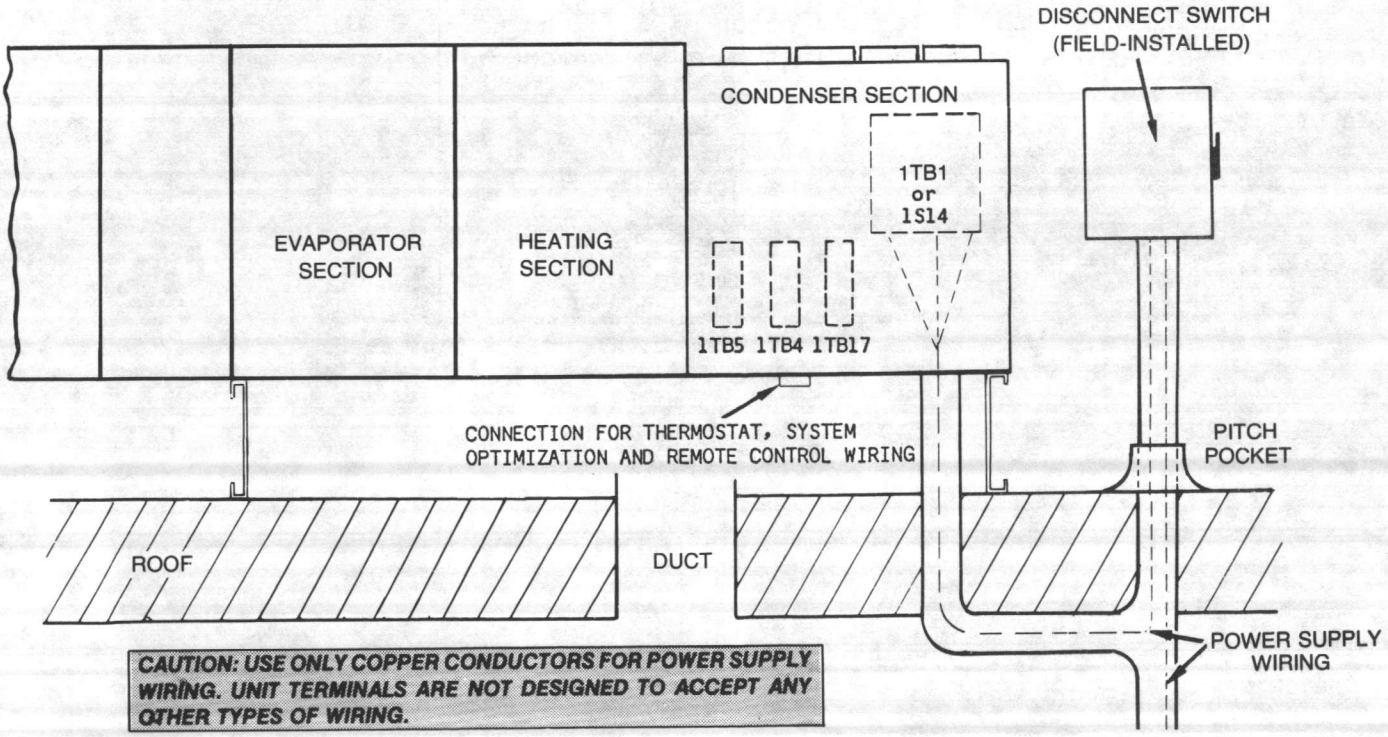

Typical field wiring diagrams are shown in Figures 21 through 26.

Note: To prevent the formation of condensation in the unit control panel, all wiring penetrations through the base of the unit must be effectively sealed.

Table 2 list electrical data. The voltage utilization range for the various unit voltages is shown in Table 3.

The electrical power source must comply with the following:

1. Voltage unbalance shall not exceed 2 percent.

2. Voltage for all motors shall be within plus or minus 10 percent of the nameplate rating (voltage utilization range).

Figure 20
Power Supply
Connections

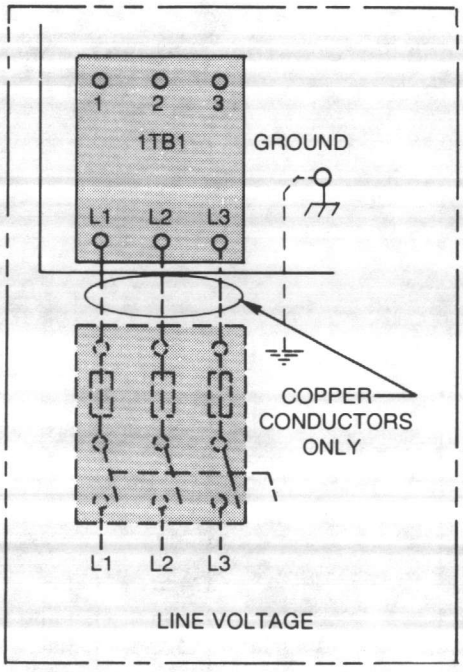

The following equations are for the electric heat sections on dual source SEHC units:

Minimum Circuit Ampacity

1.25 x (electric heat full load ampacity) = MCA

Maximum Fuse Size

1.25 x (electric heat full load ampacity) = MFS

Note: Select standard fuse rating equal to maximum fuse size or next larger standard fuse rating.

Disconnect Switch Size

1.15 x (electric heat full load ampacity) = disconnect switch size

The following procedure is for single source power SEHC units. All SEHC 20 through 75 ton units with 380, 415, 460 and 575 volt power are single source.

Determine electrical service sizing as follows:

1. Use the same sizing procedure as for SAHC, SBHC, SFHC, SLHC, SSHC and SXHC units to determine cooling cooling MCA, MFS, RDE and disconnect switch size.

2. Use the following sizing procedure to determine electric heat MCA, MFS, RDE and disconnect switch size.

   Minimum Circuit Ampacity

   1.25 x (electric coil full load amps
   + Supply fan full load amps
   + Exhaust fan full load amps) = MCA

   Maximum Fuse Size

   1.25 x (electric coil full load amps
   + Supply fan full load amps
   + Exhaust fan full load amps) = MFS

   Note: Select standard fuse rating equal to maximum fuse size or next larger standard fuse rating.

   Recommended Dual Element Fuse Size

   Electric heat full load amps
   + 1.5 x (supply fan full load amps)
   + Exhaust fan full load amps = RDE

   Note: Fuse rating selected must not exceed maximum fuse size selected.

Disconnect Switch Size

1.15 x (electric heat full load amps
+ Supply fan full load amps
+ Exhaust fan full load amps) = disconnect switch size

3. Compare the values for MCA, MFS, RDE and disconnect switch size as calculated in Steps 1 and 2. The larger of each pair of values obtained is to be used as the unit MCA, MFS, RDE and disconnect switch size.

Control Power Wiring

Unit control components are 115 volts. A 115-volt control power transformer is supplied as standard equipment.

System Optimization Connections (Option)

The optional System Optimization interface is a series of five 24 VAC relays, designed to operate in conjunction with a Tracer Energy Management System or other compatible energy management system. Wiring connections are provided on terminal strip 1TB17 in the unit control panel. Refer to Figures 22, 24, 26 and 27 for System Optimization wiring.

Gas Piping (SBHC and SFHC)

CAUTION: Do not connect gas piping to the unit until a supply line pressure/leak test has been completed to avoid possible gas valve damage and unsafe operating conditions.

If the unit is to be installed at an altitude in excess of 2,000 feet, derate the input by 4 percent for each 1,000 feet of elevation above the 2,000 foot level.

All unit internal gas piping is factory completed and tested before shipment. As shown in Figure 28, the gas supply line is to be connected at the factory installed elbow located in the gas heat control compartment.

Gas piping may be run through the side or bottom of the unit. To provide adequate gas pressure at the unit, size the gas piping in accordance with codes. Use Table 4 as a guide to determine proper size. When making pipe connections, use a joint sealant that is resistant to liquid petroleum gases.

Example: It is determined that a 40 foot run of gas pipe is required to connect the unit with a 050 model furnace to a 1,000 Btu/cu. ft. natural gas supply.

$$\text{Cu. Ft./Hr.} = \frac{\text{Input}}{\text{Btu}} = \frac{500{,}000}{1{,}000} = 500$$

Table 4 shows that 1-1/4" pipe is required.

Note: If more than one unit is to be served by the same piping arrangement, the total cu. ft./hr. input and length of pipe must be considered.

Before making any connections to an existing gas line supplying other appliances, make certain the existing line is of adequate size to handle the load.

Figure 27
System Optimization
Relay Schematic

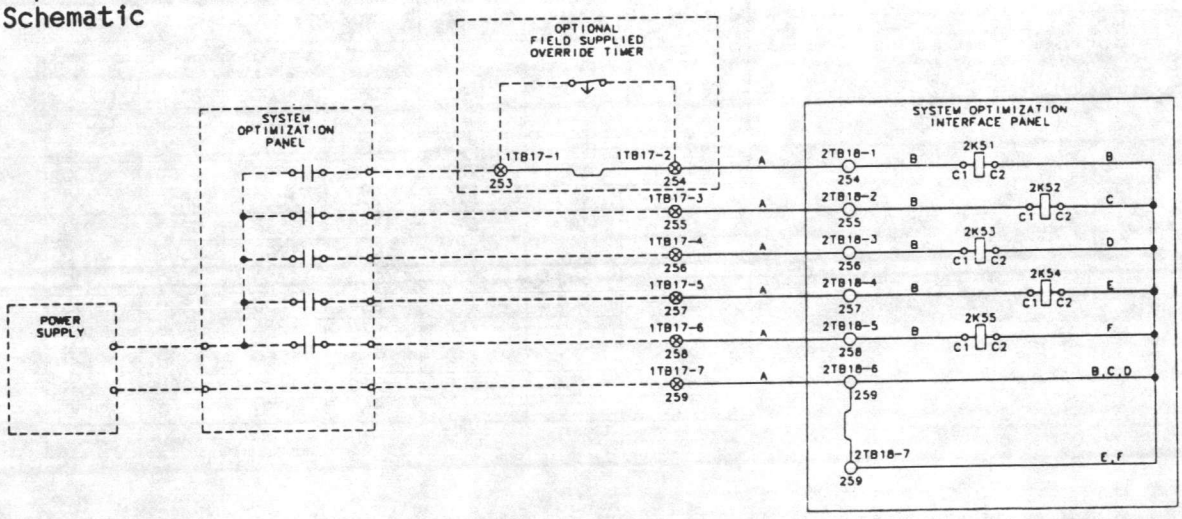

Figure 28
Gas Piping Assembly

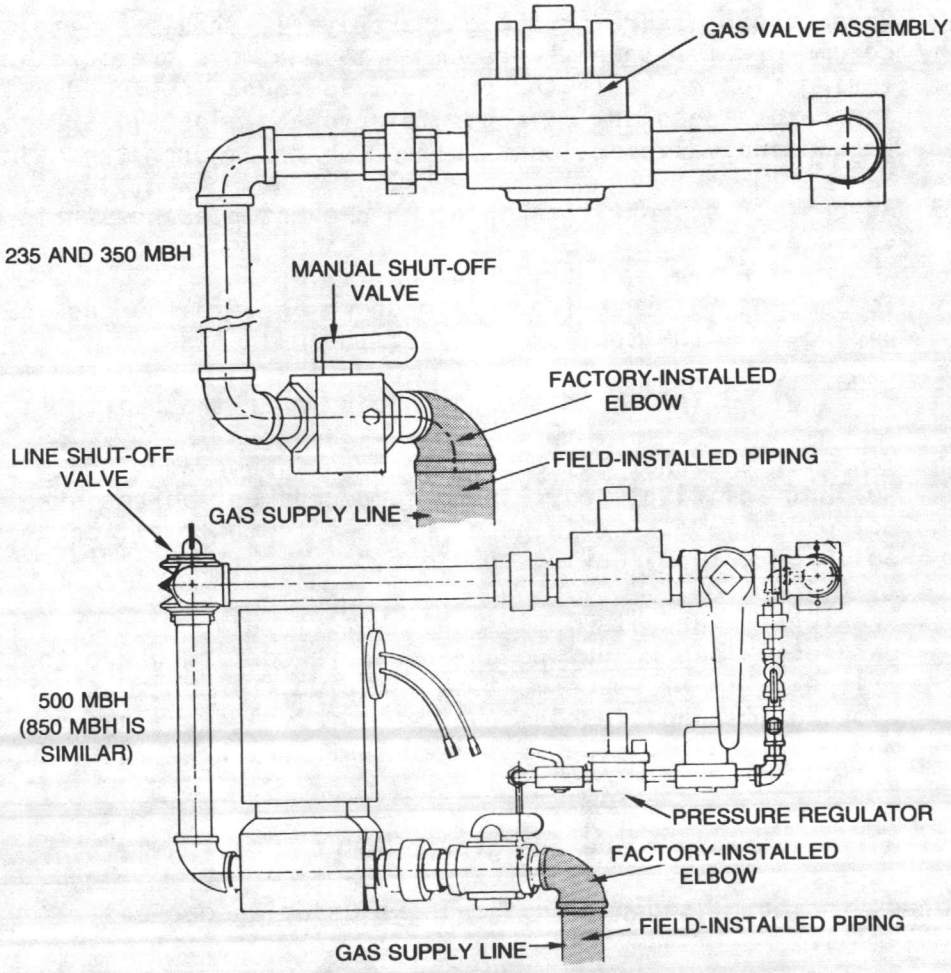

Table 4
Gas Pipe
Sizing

PIPE RUN (FEET)	PIPE SIZE (INCHES)					
	1-1/4"	1-1/2"	2"	2-1/2"	3"	4"
	GAS INPUT - CU. FT/HR"					
10	1050	1600	3050	4800	8500	17500
20	730	1100	2100	3300	5900	12000
30	590	890	1650	2700	4700	9700
40	500	760	1450	2300	4100	8300
50	440	670	1270	2000	3600	7400
60	400	610	1150	1850	3250	6800
70	370	560	1050	1700	3000	6200
80	350	530	990	1600	2800	5800
90	320	490	930	1500	2600	5400
100	305	460	870	1400	2500	5100
125	275	410	780	1250	2200	4500
150	250	380	710	1130	2000	4100
175	225	350	650	1050	1850	3800
200	210	320	610	980	1700	3500

Pipe Installation

1. Install the gas piping in accordance with applicable local codes.

2. Check the pressure of the gas supply. It should be at least 1 inch water column greater than the recommended manifold pressure when the heater is firing (Table 5). If the pressure is found to exceed 8 inches water column for natural gas or 12 inches for propane, install a second pressure regulating valve at least 10 feet upstream from the main shutoff valve.

3. Adequately support the piping to prevent placing strain on the gas manifold and controls.

4. To prevent moisture from being drawn in with the gas, run the take-off piping from the top, or side, of the main pipe.

5. Provide a drip leg in the gas piping near the unit.

6. Make certain that all connections have been adequately doped with joint sealant and tightened. Piping compound must be resistant to liquified petroleum gases. It is good practice to check all connections with a soap solution before leaving the job.

7. The furnace and its individual shutoff valve must be disconnected from the gas supply piping during any pressure testing where test pressures exceed 1/4 psig. The furnace must be isolated from the gas supply piping system by closing its individual manual shutoff valve during any pressure testing of the gas supply piping system at test pressures equal to or less than 1/4 psig.

8. All unions are to be the ground joint type.

Check the completed piping for leaks using a soap and water solution or similar material.

Table 5
Proper Setting for
Manifold Pressures

	STAGE	SFHC	SBHC
HIGH HEAT	HIGH FIRE LOW FIRE	3.5" w.c. 0.9" w.c.	11.0" w.c. 2.8" w.c.
LOW HEAT	HIGH FIRE LOW FIRE	3.5" w.c. 0.9" w.c.	11.0" w.c. 2.8" w.c.

WARNING: NEVER USE AN OPEN FLAME TO TEST FOR GAS LEAKS: AN EXPLOSION COULD OCCUR, CAUSING INJURY OR DEATH.

CAUTION: Never expose the unit to gas line pressures in excess of 8 inches water column (12 inches for propane units), to prevent damage to the unit.

CAUTION: Do not rely on a shutoff valve to isolate the unit while conducting gas pressure/leak tests. These valves may not be completely shut off, exposing the unit gas valve to excessive pressure and possible damage.

Gas Pressure

The entering gas pressure at the unit inlet should be 7 inches water column for natural gas. A pressure regulator should be used for each unit along with the proper pipe sizing to produce the proper gas pressures. If more than one unit will be served by a single regulator, the normal operating pressure to the unit must also be 7 inches water column. Pressure fluctuations during operation must not exceed 2 inches water column. In all cases, gas pressure in excess of 8 inches water column may damage the regulator. No regulation will result below 4 inches water column at the unit.

CAUTION: If the pressure regulator is damaged, the presence of gas may create a hazard of explosion.

For propane gas units, pressure at the unit inlet should be 11 inches water column (not to exceed 12 inches), with a regulator on each unit.

Flue

For shipping purposes, the flue, flue extension, mounting strap and screws are located in the evaporator section. Attach the flue to the heat exchanger tube using the mounting strap. Slide the flue extension down over the flue and secure with the screws. See Figure 29.

Figure 29
Flue Installation

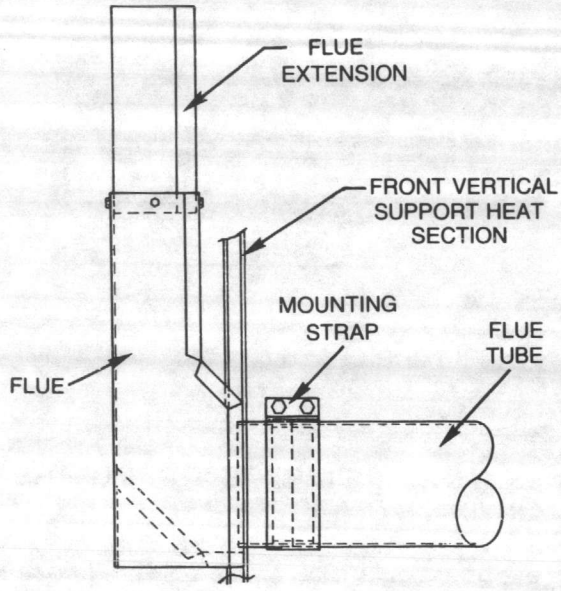

Piping for Heating Coils (SLHC and SSHC)

Run the piping to the steam or hot water coil after the unit is set into place. Bring the piping into the unit heating section through the holes provided in the bottom of the unit. See Figure 30 for the location of these holes.

Supply and return connections on both steam and hot water coils are identical in size. See Table 6 coil connection sizes.

A modulating valve (two-way valve for SSHC, three-way valve for SLHC) is included as a part of each steam or hot water heating system. The valve is shipped loose inside of the unit and can be mounted inside, on or remote from the unit. Sufficient wire for the valve actuator is provided to permit valve installation in or on the unit. If the modulating valve is to be remotely mounted, the installing contractor must provide and splice in the additional wiring that will be required.

CAUTION: The modulating valves used on SLHC and SSHC units are not waterproof. Failure to protect these valves from moisture can result in valve malfunction.

The proper piping configuration for steam heating units (SSHC) is shown in Figure 31, and for hot water heating units (SLHC), see Figure 32.

Figure 30
Location of Supply/Return Openings for Heating Coil Piping

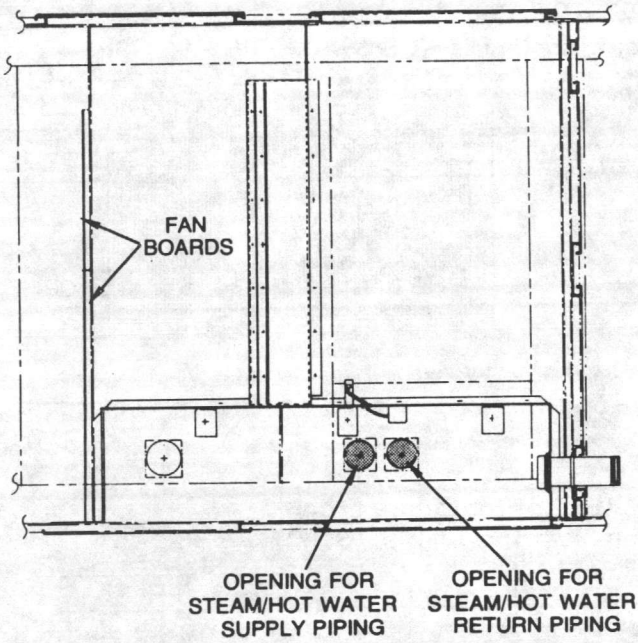

AERIAL VIEW OF UNIT HEATING SECTION WITH COIL, BLOCK-OFFS, AND ENCLOSURE TOP REMOVED.

Table 6
Heating Coil Connection Sizes

	MODULE	SLHC UNITS		SSHC UNITS*	
		20, 25 & 30-TON	40, 50, 55, 60 & 75-TON	20, 25 & 30-TON	40, 50, 55, 60 & 75-TON
COIL SUPPLY	HIGH HEAT	2½ Inches	2½ Inches	3 Inches	3 Inches
HEADER TAPPING	LOW HEAT	2½ Inches	2½ Inches	3 Inches	1½ Inches
COIL RETURN	HIGH HEAT	2½ Inches	2½ Inches	1¼ Inches	1½ Inches
HEADER TAPPING	LOW HEAT	2½ Inches	2½ Inches	1¼ Inches	1 Inch
UNIT SUPPLY OPENING	N/A	4 Inches	4 Inches	4 Inches	4 Inches
UNIT RETURN OPENING	N/A	3½ Inches	3½ Inches	3½ Inches	3½ Inches

*Multiple headers.
NOTE:
1. SLHC units have Type W coils with center offset headers; SSHC units have Type NS coils.

Figure 31
Recommended Piping Configuration
for Steam Heating Units (SSHC)

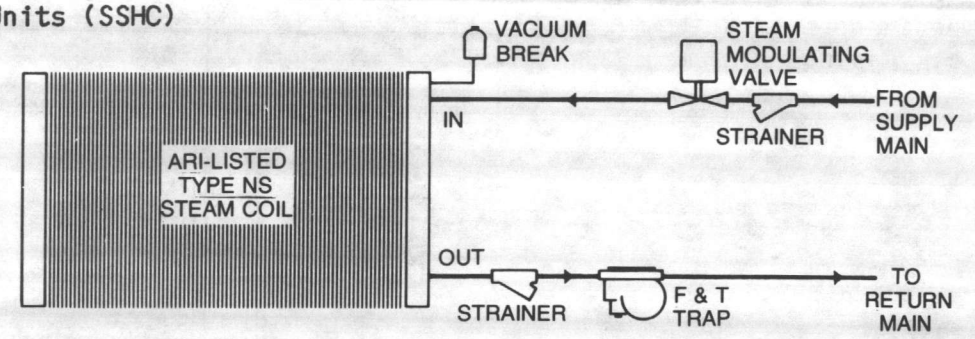

Figure 32
Recommended Piping Configuration
for Hot Water Heating Units (SLHC)

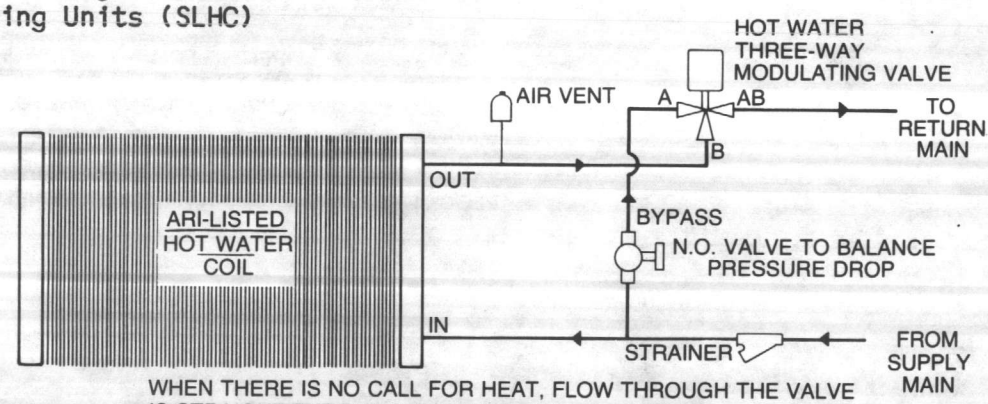

WHEN THERE IS NO CALL FOR HEAT, FLOW THROUGH THE VALVE IS STRAIGHT THROUGH, FROM PORT A TO PORT AB.

WHEN A CALL FOR HEAT EXISTS, FLOW THROUGH THE VALVE IS AT A 90-DEGREE ANGLE, FROM PORT B TO PORT AB.

Steam Coil Piping Installation (SSHC)

The steam coils are properly pitched within the unit for correct drainage.

CAUTION: Condensate must flow freely from the steam coil at all times to prevent possible coil damage resulting from water hammer, unequal thermal stress, freeze-up, and/or corrosion.

To insure optimal coil performance, use the following piping installation guidelines:

1. Install 1/2-inch, 15-degree swing-check vacuum breakers in unused condensate return tappings. The breakers should be positioned as closely as possible to the coil.

   Vent the vacuum breaker line to the atmosphere, or join it to the return main at the discharge side of the steam trap. This type of installation prevents condensate hold-up within the coil.

The following equations are for the electric heat sections on dual source SEHC units:

Minimum Circuit Ampacity

1.25 x (electric heat full load ampacity) = MCA

Maximum Fuse Size

1.25 x (electric heat full load ampacity) = MFS

Note: Select standard fuse rating equal to maximum fuse size or next larger standard fuse rating.

Disconnect Switch Size

1.15 x (electric heat full load ampacity) = disconnect switch size

The following procedure is for single source power SEHC units. All SEHC 20 through 75 ton units with 380, 415, 460 and 575 volt power are single source.

Determine electrical service sizing as follows:

1. Use the same sizing procedure as for SAHC, SBHC, SFHC, SLHC, SSHC and SXHC units to determine cooling cooling MCA, MFS, RDE and disconnect switch size.

2. Use the following sizing procedure to determine electric heat MCA, MFS, RDE and disconnect switch size.

   Minimum Circuit Ampacity

   1.25 x (electric coil full load amps
   + Supply fan full load amps
   + Exhaust fan full load amps) = MCA

   Maximum Fuse Size

   1.25 x (electric coil full load amps
   + Supply fan full load amps
   + Exhaust fan full load amps) = MFS

   Note: Select standard fuse rating equal to maximum fuse size or next larger standard fuse rating.

   Recommended Dual Element Fuse Size

   Electric heat full load amps
   + 1.5 x (supply fan full load amps)
   + Exhaust fan full load amps = RDE

   Note: Fuse rating selected must not exceed maximum fuse size selected.

Disconnect Switch Size

1.15 x (electric heat full load amps
+ Supply fan full load amps
+ Exhaust fan full load amps) = disconnect switch size

3. Compare the values for MCA, MFS, RDE and disconnect switch size as calculated in Steps 1 and 2. The larger of each pair of values obtained is to be used as the unit MCA, MFS, RDE and disconnect switch size.

Control Power Wiring

Unit control components are 115 volts. A 115-volt control power transformer is supplied as standard equipment.

System Optimization Connections (Option)

The optional System Optimization interface is a series of five 24 VAC relays, designed to operate in conjunction with a Tracer Energy Management System or other compatible energy management system. Wiring connections are provided on terminal strip 1TB17 in the unit control panel. Refer to Figures 22, 24, 26 and 27 for System Optimization wiring.

Gas Piping (SBHC and SFHC)

CAUTION: Do not connect gas piping to the unit until a supply line pressure/leak test has been completed to avoid possible gas valve damage and unsafe operating conditions.

If the unit is to be installed at an altitude in excess of 2,000 feet, derate the input by 4 percent for each 1,000 feet of elevation above the 2,000 foot level.

All unit internal gas piping is factory completed and tested before shipment. As shown in Figure 28, the gas supply line is to be connected at the factory installed elbow located in the gas heat control compartment.

Gas piping may be run through the side or bottom of the unit. To provide adequate gas pressure at the unit, size the gas piping in accordance with codes. Use Table 4 as a guide to determine proper size. When making pipe connections, use a joint sealant that is resistant to liquid petroleum gases.

Example: It is determined that a 40 foot run of gas pipe is required to connect the unit with a 050 model furnace to a 1,000 Btu/cu. ft. natural gas supply.

$$\text{Cu. Ft./Hr.} = \frac{\text{Input Btu}}{1{,}000} = \frac{500{,}000}{1{,}000} = 500$$

Table 4 shows that 1-1/4" pipe is required.

Note: If more than one unit is to be served by the same piping arrangement, the total cu. ft./hr. input and length of pipe must be considered.

Before making any connections to an existing gas line supplying other appliances, make certain the existing line is of adequate size to handle the load.

Figure 27
System Optimization
Relay Schematic

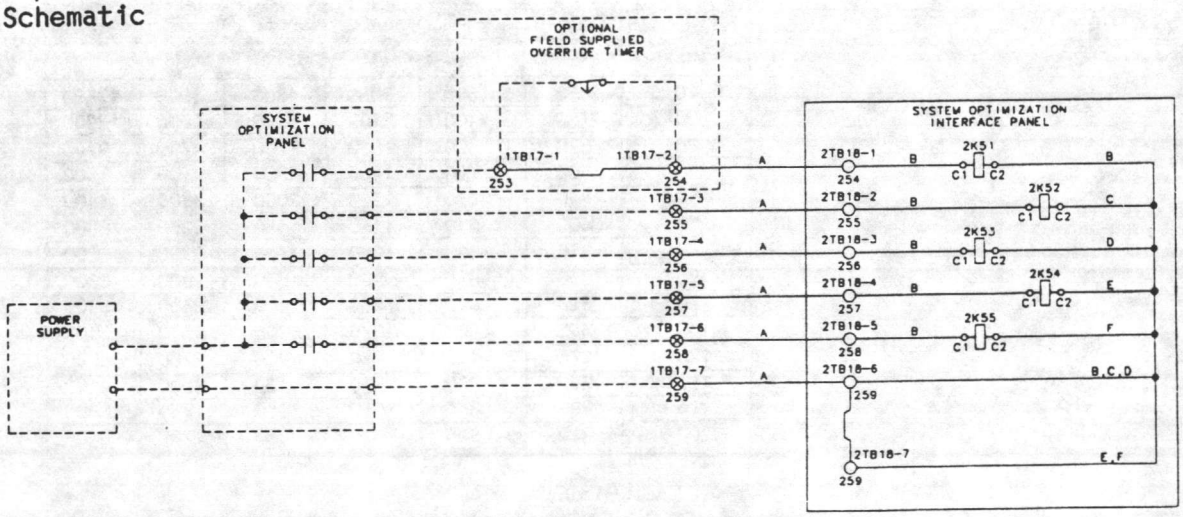

Figure 28
Gas Piping Assembly

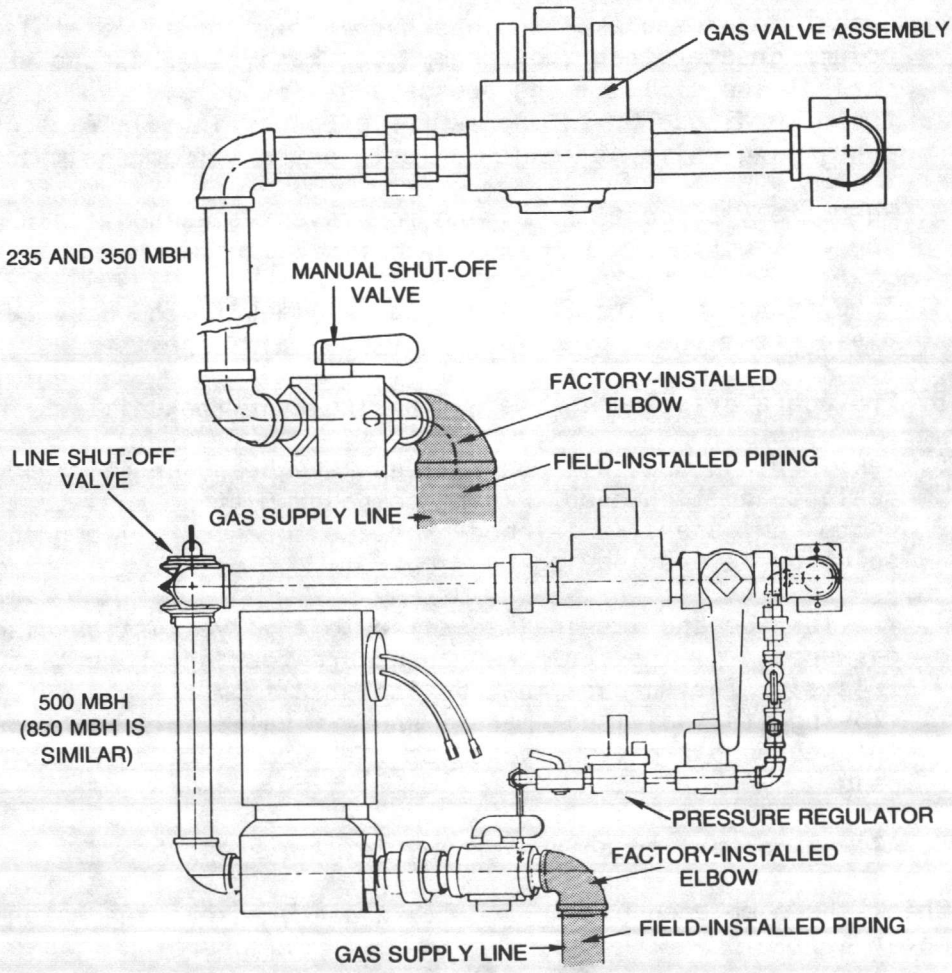

Table 4
Gas Pipe
Sizing

PIPE RUN (FEET)	PIPE SIZE (INCHES)					
	1-1/4"	1-1/2"	2"	2-1/2"	3"	4"
	GAS INPUT - CU. FT/HR"					
10	1050	1600	3050	4800	8500	17500
20	730	1100	2100	3300	5900	12000
30	590	890	1650	2700	4700	9700
40	500	760	1450	2300	4100	8300
50	440	670	1270	2000	3600	7400
60	400	610	1150	1850	3250	6800
70	370	560	1050	1700	3000	6200
80	350	530	990	1600	2800	5800
90	320	490	930	1500	2600	5400
100	305	460	870	1400	2500	5100
125	275	410	780	1250	2200	4500
150	250	380	710	1130	2000	4100
175	225	350	650	1050	1850	3800
200	210	320	610	980	1700	3500

Pipe Installation

1. Install the gas piping in accordance with applicable local codes.

2. Check the pressure of the gas supply. It should be at least 1 inch water column greater than the recommended manifold pressure when the heater is firing (Table 5). If the pressure is found to exceed 8 inches water column for natural gas or 12 inches for propane, install a second pressure regulating valve at least 10 feet upstream from the main shutoff valve.

3. Adequately support the piping to prevent placing strain on the gas manifold and controls.

4. To prevent moisture from being drawn in with the gas, run the take-off piping from the top, or side, of the main pipe.

5. Provide a drip leg in the gas piping near the unit.

6. Make certain that all connections have been adequately doped with joint sealant and tightened. Piping compound must be resistant to liquified petroleum gases. It is good practice to check all connections with a soap solution before leaving the job.

7. The furnace and its individual shutoff valve must be disconnected from the gas supply piping during any pressure testing where test pressures exceed 1/4 psig. The furnace must be isolated from the gas supply piping system by closing its individual manual shutoff valve during any pressure testing of the gas supply piping system at test pressures equal to or less than 1/4 psig.

8. All unions are to be the ground joint type.

Check the completed piping for leaks using a soap and water solution or similar material.

Table 5
Proper Setting for
Manifold Pressures

	STAGE	SFHC	SBHC
HIGH HEAT	HIGH FIRE LOW FIRE	3.5" w.c. 0.9" w.c.	11.0" w.c. 2.8" w.c.
LOW HEAT	HIGH FIRE LOW FIRE	3.5" w.c. 0.9" w.c.	11.0" w.c. 2.8" w.c.

WARNING: NEVER USE AN OPEN FLAME TO TEST FOR GAS LEAKS: AN EXPLOSION COULD OCCUR, CAUSING INJURY OR DEATH.

CAUTION: Never expose the unit to gas line pressures in excess of 8 inches water column (12 inches for propane units), to prevent damage to the unit.

CAUTION: Do not rely on a shutoff valve to isolate the unit while conducting gas pressure/leak tests. These valves may not be completely shut off, exposing the unit gas valve to excessive pressure and possible damage.

Gas Pressure

The entering gas pressure at the unit inlet should be 7 inches water column for natural gas. A pressure regulator should be used for each unit along with the proper pipe sizing to produce the proper gas pressures. If more than one unit will be served by a single regulator, the normal operating pressure to the unit must also be 7 inches water column. Pressure fluctuations during operation must not exceed 2 inches water column. In all cases, gas pressure in excess of 8 inches water column may damage the regulator. No regulation will result below 4 inches water column at the unit.

CAUTION: If the pressure regulator is damaged, the presence of gas may create a hazard of explosion.

For propane gas units, pressure at the unit inlet should be 11 inches water column (not to exceed 12 inches), with a regulator on each unit.

Flue

For shipping purposes, the flue, flue extension, mounting strap and screws are located in the evaporator section. Attach the flue to the heat exchanger tube using the mounting strap. Slide the flue extension down over the flue and secure with the screws. See Figure 29.

Figure 29
Flue Installation

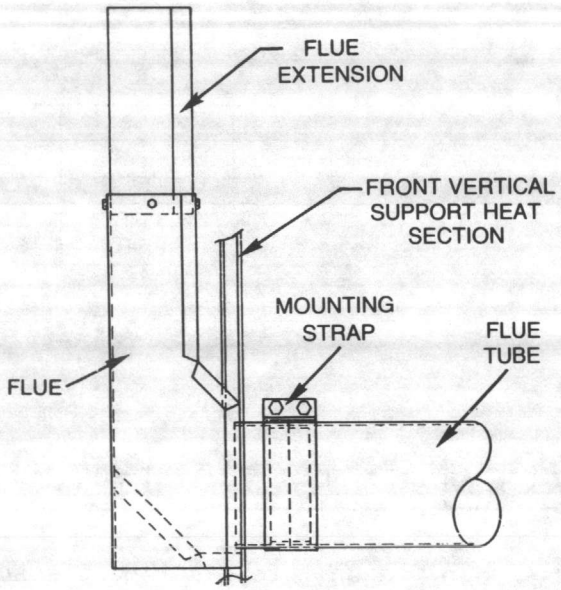

Piping for Heating Coils (SLHC and SSHC)

Run the piping to the steam or hot water coil after the unit is set into place. Bring the piping into the unit heating section through the holes provided in the bottom of the unit. See Figure 30 for the location of these holes.

Supply and return connections on both steam and hot water coils are identical in size. See Table 6 coil connection sizes.

A modulating valve (two-way valve for SSHC, three-way valve for SLHC) is included as a part of each steam or hot water heating system. The valve is shipped loose inside of the unit and can be mounted inside, on or remote from the unit. Sufficient wire for the valve actuator is provided to permit valve installation in or on the unit. If the modulating valve is to be remotely mounted, the installing contractor must provide and splice in the additional wiring that will be required.

CAUTION: The modulating valves used on SLHC and SSHC units are not waterproof. Failure to protect these valves from moisture can result in valve malfunction.

The proper piping configuration for steam heating units (SSHC) is shown in Figure 31, and for hot water heating units (SLHC), see Figure 32.

Figure 30
Location of Supply/Return Openings for Heating Coil Piping

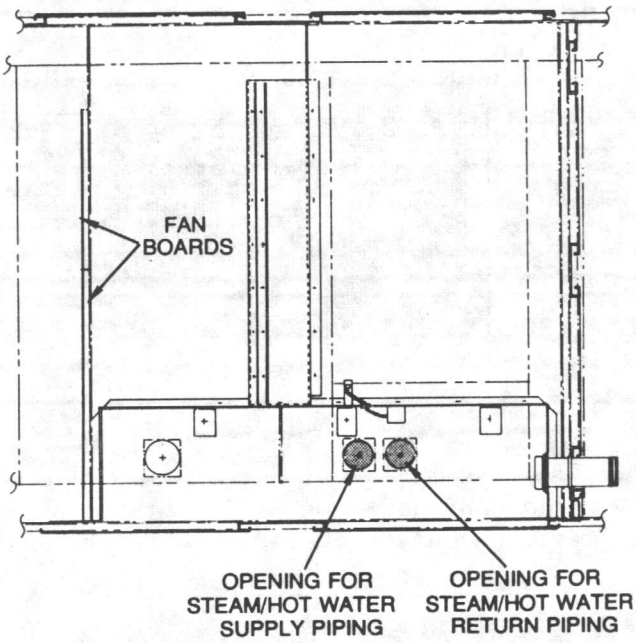

AERIAL VIEW OF UNIT HEATING SECTION WITH COIL, BLOCK-OFFS, AND ENCLOSURE TOP REMOVED.

Table 6
Heating Coil Connection Sizes

	MODULE	SLHC UNITS		SSHC UNITS*	
		20, 25 & 30-TON	40, 50, 55, 60 & 75-TON	20, 25 & 30-TON	40, 50, 55, 60 & 75-TON
COIL SUPPLY	HIGH HEAT	2½ Inches	2½ Inches	3 Inches	3 Inches
HEADER TAPPING	LOW HEAT	2½ Inches	2½ Inches	3 Inches	1½ Inches
COIL RETURN	HIGH HEAT	2½ Inches	2½ Inches	1¼ Inches	1½ Inches
HEADER TAPPING	LOW HEAT	2½ Inches	2½ Inches	1¼ Inches	1 Inch
UNIT SUPPLY OPENING	N/A	4 Inches	4 Inches	4 Inches	4 Inches
UNIT RETURN OPENING	N/A	3½ Inches	3½ Inches	3½ Inches	3½ Inches

*Multiple headers.
NOTE:
1. SLHC units have Type W coils with center offset headers; SSHC units have Type NS coils.

Figure 31
Recommended Piping Configuration
for Steam Heating Units (SSHC)

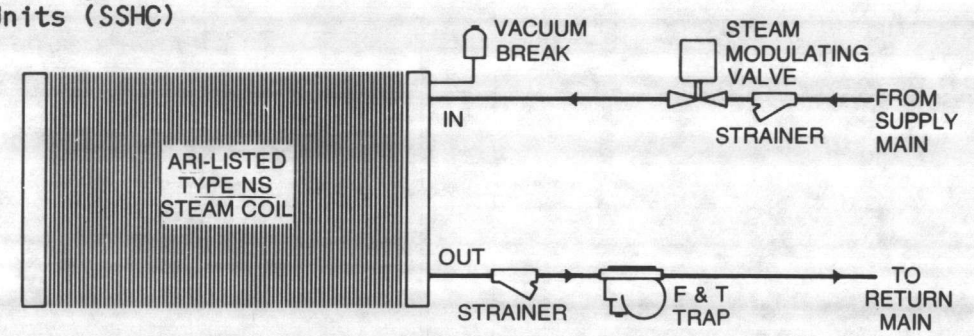

Figure 32
Recommended Piping Configuration
for Hot Water Heating Units (SLHC)

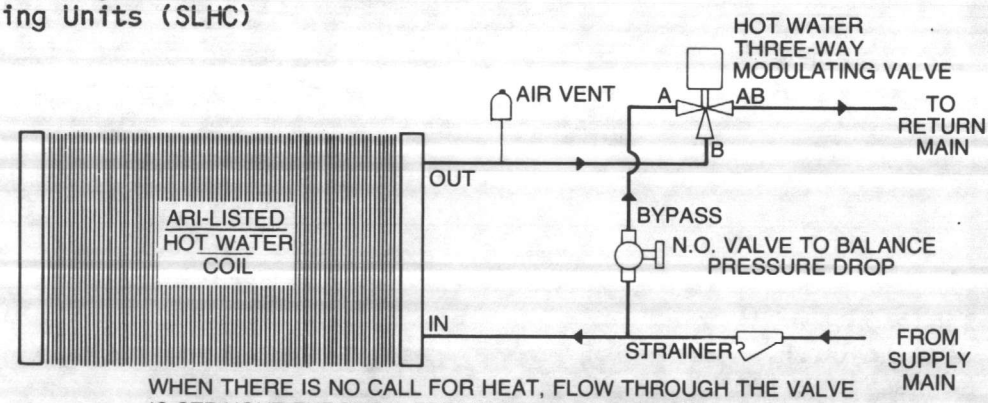

WHEN THERE IS NO CALL FOR HEAT, FLOW THROUGH THE VALVE IS STRAIGHT THROUGH, FROM PORT A TO PORT AB.

WHEN A CALL FOR HEAT EXISTS, FLOW THROUGH THE VALVE IS AT A 90-DEGREE ANGLE, FROM PORT B TO PORT AB.

Steam Coil Piping Installation (SSHC)

The steam coils are properly pitched within the unit for correct drainage.

CAUTION: Condensate must flow freely from the steam coil at all times to prevent possible coil damage resulting from water hammer, unequal thermal stress, freeze-up, and/or corrosion.

To insure optimal coil performance, use the following piping installation guidelines:

1. Install 1/2-inch, 15-degree swing-check vacuum breakers in unused condensate return tappings. The breakers should be positioned as closely as possible to the coil.

   Vent the vacuum breaker line to the atmosphere, or join it to the return main at the discharge side of the steam trap. This type of installation prevents condensate hold-up within the coil.

2. Locate the steam trap discharge at least 12 inches below the condensate return tapping to provide sufficient hydrostatic head pressure to overcome trap losses and to assure complete condensate removal.

3. Be sure to use float and thermostatic traps when the system includes an atmospheric pressure/gravity condensate return, or whenever the possibility of low pressure supply steam exists.

4. Use the modulating valve provided with the unit to control flow through the steam coil.

5. Drain the steam main into the return line using a steam trap located ahead of the control valve.

6. Do not use bushings, and do not reduce the diameter of the return line(s). All return lines and fittings must be equal to the full size of the return opening. It is acceptable to use a short nipple at the coil condensate connection.

7. At unit start-up, turn the heat on full for at least 10 minutes before opening the outdoor air dampers to prevent excessive thermal stresses, water hammer and freezing.

Hot Water Coil Piping Installation (SLHC)

The hot water coils are self-venting if the tube water velocity exceeds 1.5 feet per second. If tube water velocity is less than 1.5 feet per second, use one of the following methods to vent the hot water coil:

1. Install an automatic air vent in the top pipe plug tapping of the return header.

2. Vent the hot water coil from the top of the return header down to the return piping. Be sure to size the return piping at the vent connection to provide sufficient water velocities.

3. Install the modulating valve provided with the unit in an upright position, piped for valve seating against the flow. Valve position should permit easy removal and replacement of the actuator.

Night Setback/Morning Warm-Up Thermostat

Optional single-stage thermostats (Honeywell T451A) are available for use with VAV units equipped with the night setback and morning warm-up options. The T451A thermostat (Figure 33) is a light duty, 24 volt thermostat designed to provide heating control.

Location and Mounting

When selecting a thermostat location, choose a site in a frequently occupied area with good air circulation at an average temperature. The thermostat should be mounted approximately 4-1/2 feet above the floor. The T451A thermostat mounts on a standard vertical outlet box. See Figure 34 for mounting details.

Figure 33
Night Setback/Morning
Warm-Up Thermostat

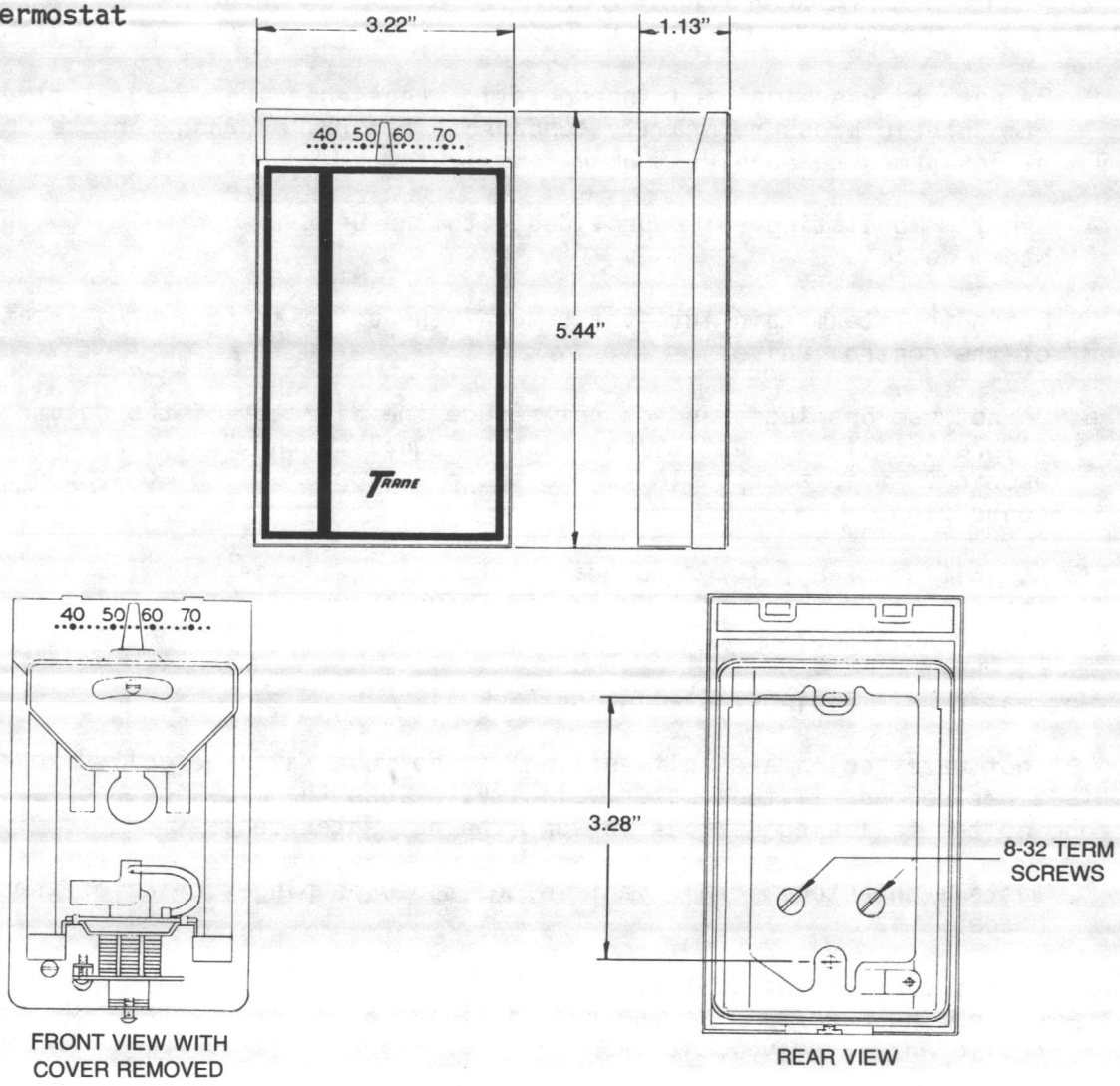

Figure 34
Mounting Thermostat on
Vertical Outlet Box

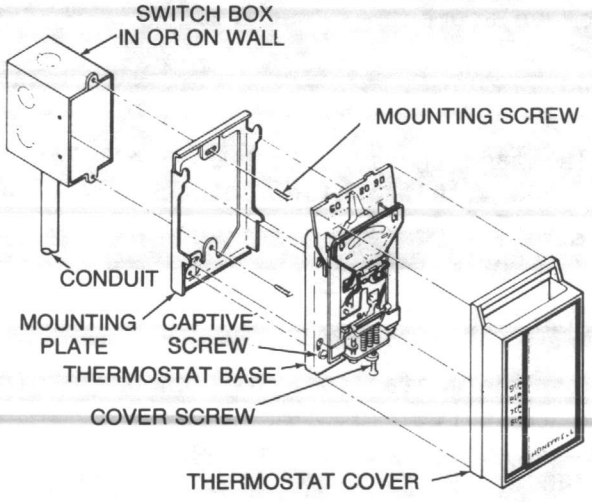

Electronic Night Setback Panel

The Trane Electronic Night Setback Panel (Figure 35) provides up to 18 user selected operations for night setback and normal operation. The SETBACK mode energizes the thermostat to a minimum setting (approximately 15 F setback) for heating and de-energizes the cooling relays. The NORMAL mode allows normal heating and cooling operation. Once the setback panel is programmed, the selected seven day cycle will be repeated automatically. The panel is powered by 24 volts AC from the unit. An auxiliary battery power supply is energized automatically during a power interruption. All display functions cease when the battery is powering the panel. When AC power is restored, all displays and programs return to normal.

Note: The Trane Electronic Night Setback Panel is designed for use with units which do not have the System Optimization Interface option.

Displays

The four digit numeric display normally shows the time of day. This display is also used when programming to show the time of the programmed operations.

The twelve lights located above their respective keyboard buttons indicate the day of the week and the programming function.

The keyboard also contains dual function buttons. These buttons program the days of the week and corresponding numbers. When programming a day function, the user must press the day function button on the lower keyboard to register the respective function in the clock memory.

Figure 35
Electronic Night Setback Panel
(Shown with Panel Door Open)

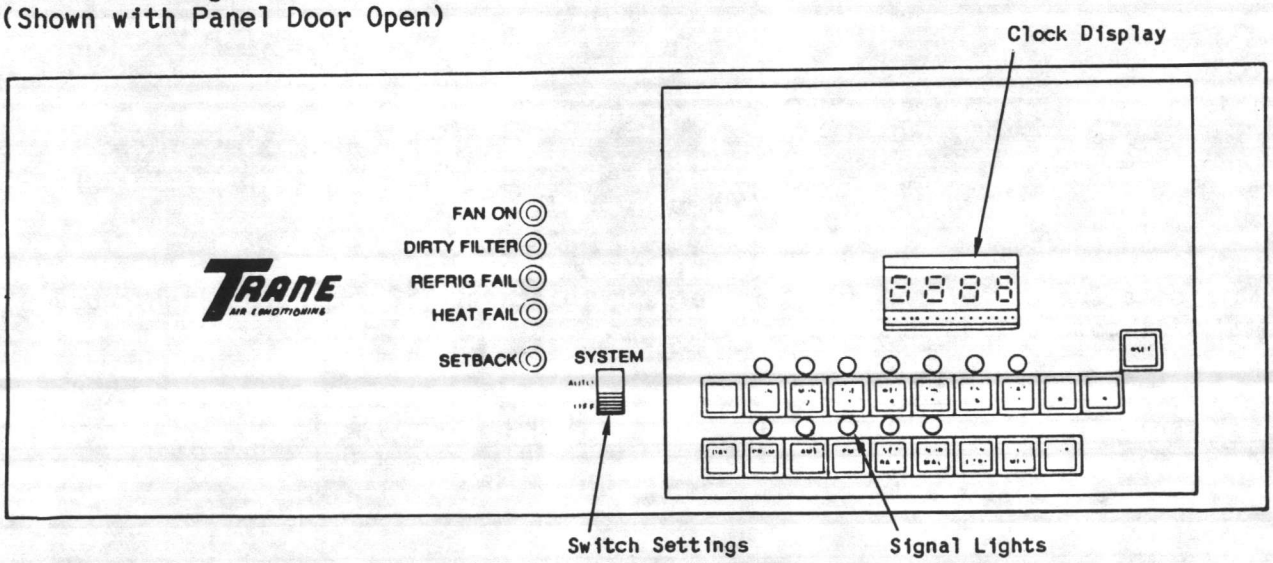

Programming

Programming the setback panel consists of entering the time of day, or day and time of operations into the panel memory.

"TIME OF DAY" must be entered when the panel is first turned on. This consists of selecting the day, selecting the time and activating the clock. For example, to set the clock for Monday at 9:15 AM, set the following keys in the proper sequence.

This sets the day of the week. The indicator light above MON will come on.

This sets the time. The indicator light above AM will come on, and the display will read 915.

This activates the clock function. The time will continue from the time set.

"NORMAL" and "SETBACK" programming sets the days and times at which these operations occur. The seven day clock repeats the cycle weekly. A typical sequence for entering the "SETBACK" mode at 9:30 AM each Monday is as follows:

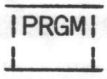

This sets the panel in the "PROGRAM" mode.

This sets the day of the week for setback to start. The indicator light above MON will come on.

This sets the time at which setback will start. The indicator light above AM will come on, and the display will read 930.

| SET |
| BACK |

This completes the "SETBACK" entry program. The indicator light above SETBACK will come on.

The indicator lights and display show the information that has been entered. Check the lights and display before pressing SETBACK or NORMAL to be sure the information is entered correctly. If an error has been made, press CLR ETRY to erase any entries in that program, and start again.

If an error is found after pressing SETBACK or NORMAL, or if the program is to be changed, press CLR MEM twice to erase all entries from the panel memory. The time of day will be displayed. Re-enter the correct or changed information into the appropriate program.

"DIRECT CONTROL" can be set directly, regardless of the time of day, as follows:

| PRGM | | SET |
| | | BACK |

This immediately places the panel in the setback mode.

| PRGM | | NOR |
| | | MAL |

This immediately allows the panel to resume normal operation.

The directly set mode will remain in effect until the next programmed change occurs or until the mode is directly changed again.

"ONE TIME PROGRAMMING" allows a one time change to be entered up to twelve hours in advance. A day is not entered, and the time entered represents the hours and minutes from the time of program entry that the program is to occur. A typical keystroke sequence is as follows:

| PRGM | | SUN | | | | TUE | | | | NOR |
| | | 1 | | 0 | | 3 | | 0 | | MAL |

This will allow the panel to go into the normal mode 10 hours and 30 minutes after the time the entry was made.

"EXAMINE MEMORY" is used to check the programmed entries. Use the following sequence:

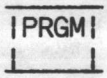

This sets the panel in the program mode.

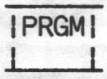

This allows the first entry to be examined.

Each time PRGM is pressed twice, the next entry will be displayed. The programmed information will be displayed on the indicator lights and the panel display. When a blank display (all lights off) is encountered, the end of the entries has been reached. Continuing to press PRGM will repeat the memory entry display from the beginning.

Start-Up

Preparation

Before starting the unit, use the "Installation Checklist" that follows the Start-Up section of this manual. Also, follow the procedures listed below to be sure the unit is properly installed and ready for start-up.

1. Inspect all wiring connections to be sure they are tight. Information in the title block of the wiring diagram(s) should agree with the unit nameplate.

2. Lubricate all electric motors in accordance with the motor manufacturer's recommendations.

3. Check the condenser fans to be sure the blades are secure on the shafts, and that they rotate freely. Airflow must be unobstructed.

4. Verify that the system switch is in the OFF position. Close the unit disconnect switch to energize the compressor crankcase heater(s).

   CAUTION: The crankcase heater must be energized for eight hours before start-up to prevent compressor damage.

5. Check the unit supply voltage to be sure it is within the utilization range given in Table 3.

6. Verify that the compressor suction and discharge service valves are open (backseated).

   CAUTION: Be sure the compressor suction and discharge service valves are open before starting the unit to prevent damage to the compressor(s).

7. Check the settings of all temperature and pressure controls. Refer to Table 7 for control setpoints.

   Note: The discharge air controller must be set at the unit discharge temperature predetermined in the building specifications.

8. Inspect the interior of the unit for any loose debris or tools.

9. Check the fit of the control panel door. Gasketing must be properly installed to prevent water damage.

Starting the Unit in the Cooling Mode

CAUTION: Before starting the unit in the cooling mode, turn the system switch to OFF and close the unit disconnect switch. This will energize the compressor crankcase heater. Allow the heater to operate for a minimum of 8 hours to prevent possible damage to compressor bearings from excessive foaming at start-up.

Table 7
Unit Control
Settings

Control	Control Setting	
	Open	Closed
Low Pressure Cut-Out (20 - 60 Ton) (2B7S4, 2B8S5)	25 psig	40 psig
Low Pressure Cut-Out (75 Ton) (2B7S4, 2B8S5)	7 psig	22 psig
High Pressure Cut-Out (2B7S2, 2B8S3)	405 psig	300 psig
Fan Pressure Control (2S10, 2S11)	155 psig	300 psig
Oil Pressure Control (75 Ton)	15 psig	22 psig
Compressor Winding Thermostats (Model K Compressors)	221 F	181 F
Compressor Winding Sensors (Model R Compressors)	200 F	165 F
Enthalpy Control	Factory Set and Sealed to "C" Control Range (Approx. 63 F at 50% Rel. Humidity)	
Filter Switch a. Throwaway and Wire Mesh Filters b. Bag Filters	a. 0.5" W.C. Pressure Differential b. 1.0" W.C. Pressure Differential	

Notes: 1. Fan pressure control contacts close on pressure rise, and open on pressure drop.
2. Oil pressure control is factory set to begin a time delay period at 15 ± 2 psig and to stop time delay at 22 ± 3 psig. Time delay period is 70 to 150 seconds depending on voltage at the control.

Refer to Figures 36 through 40 for illustrations of typical unit control panels.

1. Check the compressor suction and discharge service valves to be sure they are open. (The liquid line valve must be 1/4-turn off backseat.)

2. Reset all controls equipped with a manual reset function.

3. Close the unit disconnect switch.

   WARNING: HIGH VOLTAGE IS PRESENT IN SOME AREAS OF THE CONTROL PANEL(S) WITH THE UNIT DISCONNECT SWITCH CLOSED. FAILURE TO EXERCISE CAUTION WHEN WORKING AROUND ENERGIZED ELECTRICAL COMPONENTS MAY RESULT IN INJURY OR DEATH FROM ELECTRICAL SHOCK.

4. Set the remote panel system switch to ON or AUTO.

5. With the discharge air controller calling for cooling, unit operation is automatic.

After the unit has been operating for approximately three minutes, check the compressor oil level, liquid line sight glass(es), and suction and discharge pressures.

Starting the Unit in the Night Setback/Morning Warm-Up Mode (SEHC, SLHC, SSHC)

1. Close the unit disconnect switch(es) in the supply power line(s) that provides power to the unit control panel (and to the heating section of SEHC units).

   WARNING: HIGH VOLTAGE IS PRESENT IN SOME AREAS OF THE CONTROL PANEL(S) WITH THE UNIT DISCONNECT SWITCH CLOSED. FAILURE TO EXERCISE CAUTION WHEN WORKING AROUND ENERGIZED ELECTRICAL COMPONENTS MAY RESULT IN INJURY OR DEATH FROM ELECTRICAL SHOCK.

2. Move the system switch (1S1) in the unit control panel to the ON position.

3. Set the remote panel as follows:

   a. Set the system switch to AUTO.

   b. Program the remote panel to operate in the setback mode.

4. Set the temperature control of the night setback/morning warm-up thermostat to a point above room temperature.

With the thermostat calling for heating, unit operation is automatic in the heating mode.

Figure 36
Typical Control Panel
for 20 and 25 Ton Units

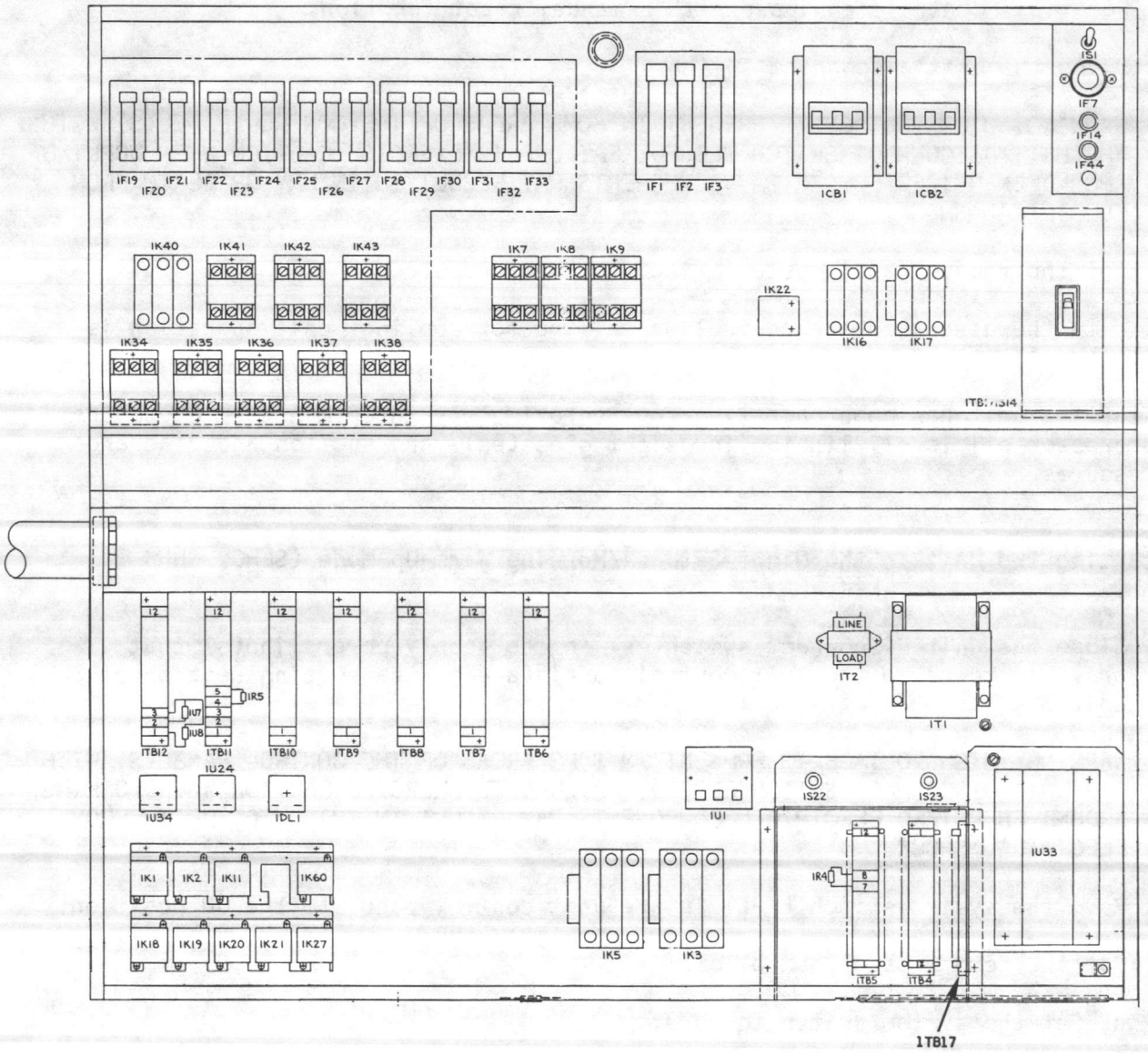

Figure 37
Typical Control Panel
for 30 Ton Units

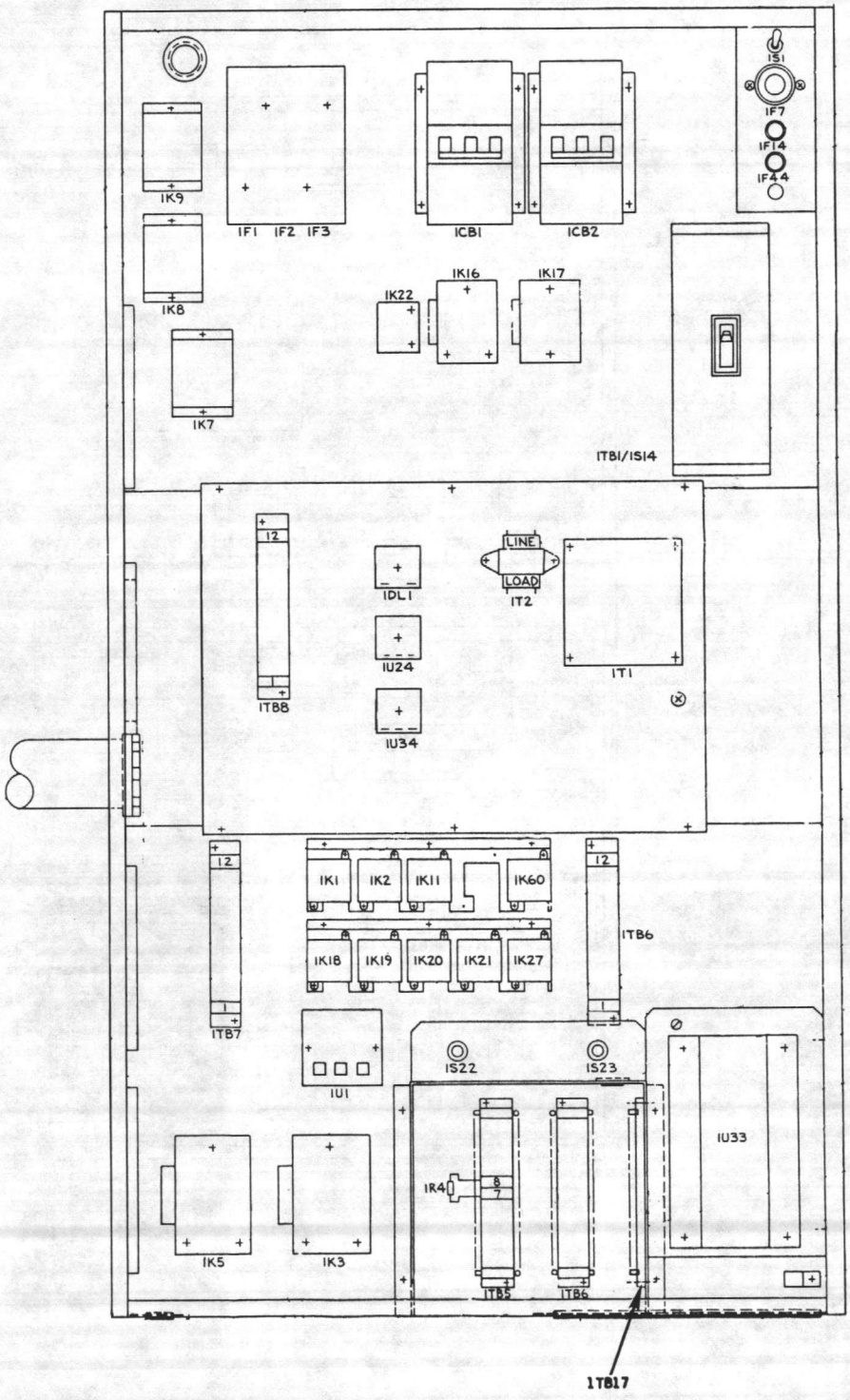

Figure 38
Typical Control Panel
for 40 and 60 Ton Units

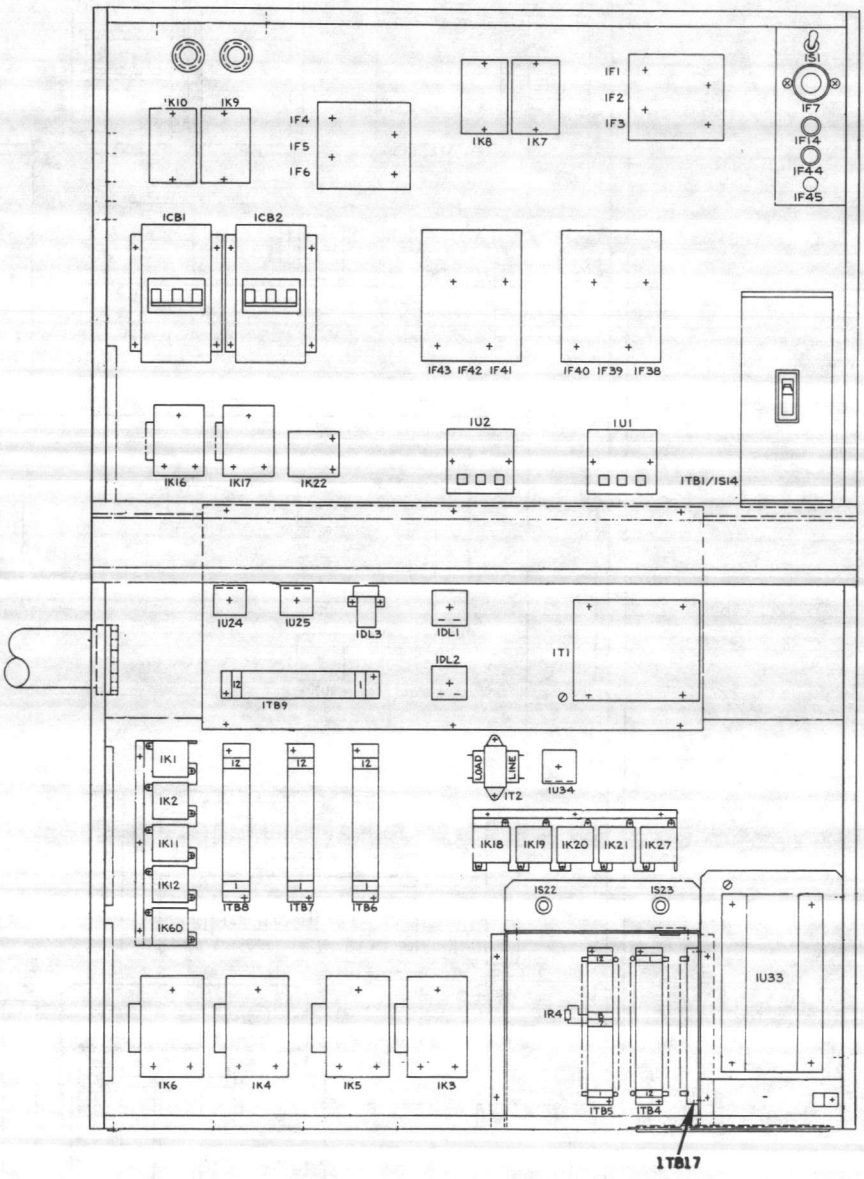

Figure 39
Typical Control Panel
for 50 and 55 Ton Units

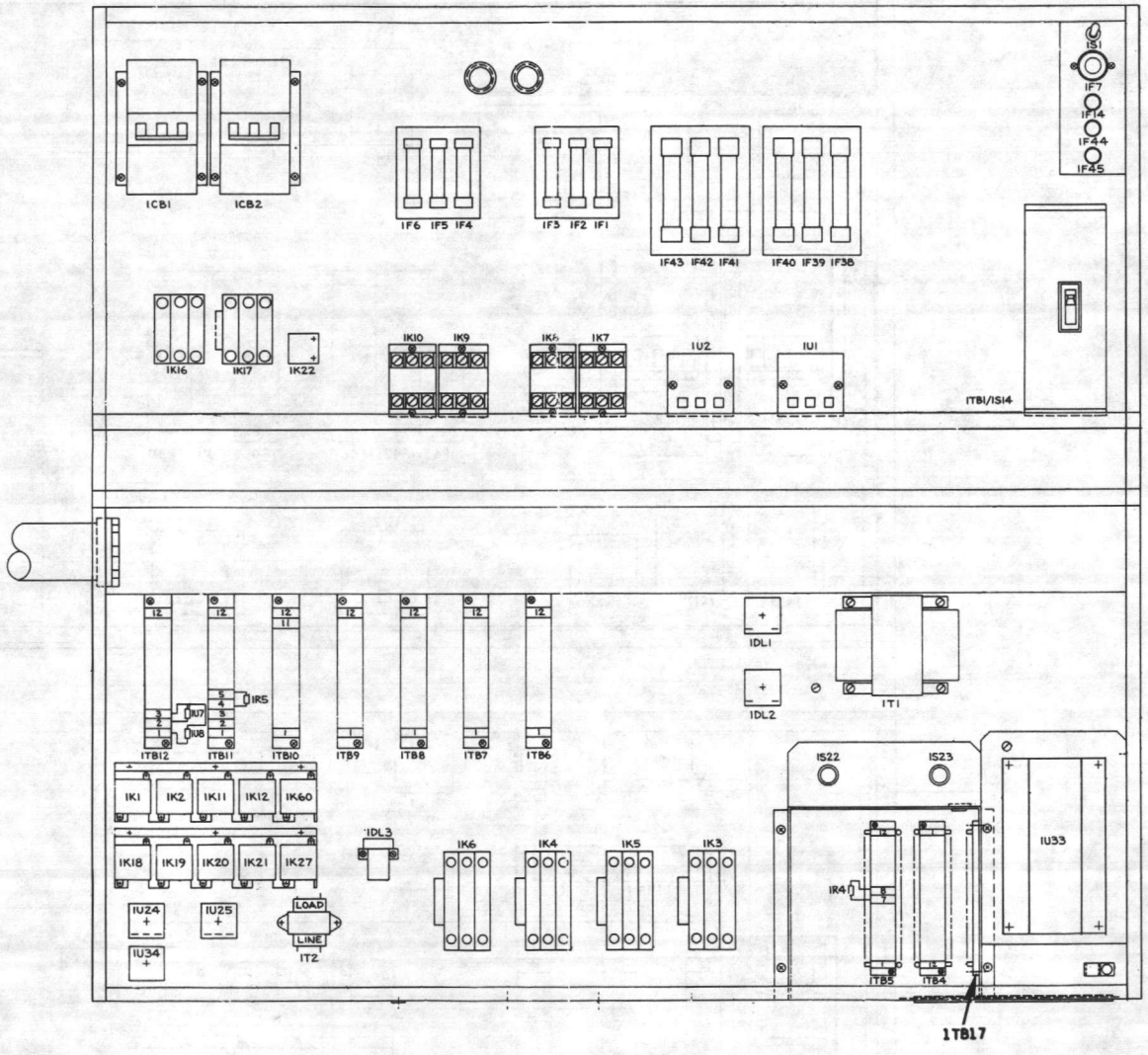

Figure 40
Typical Control Panel
for 75 Ton Units

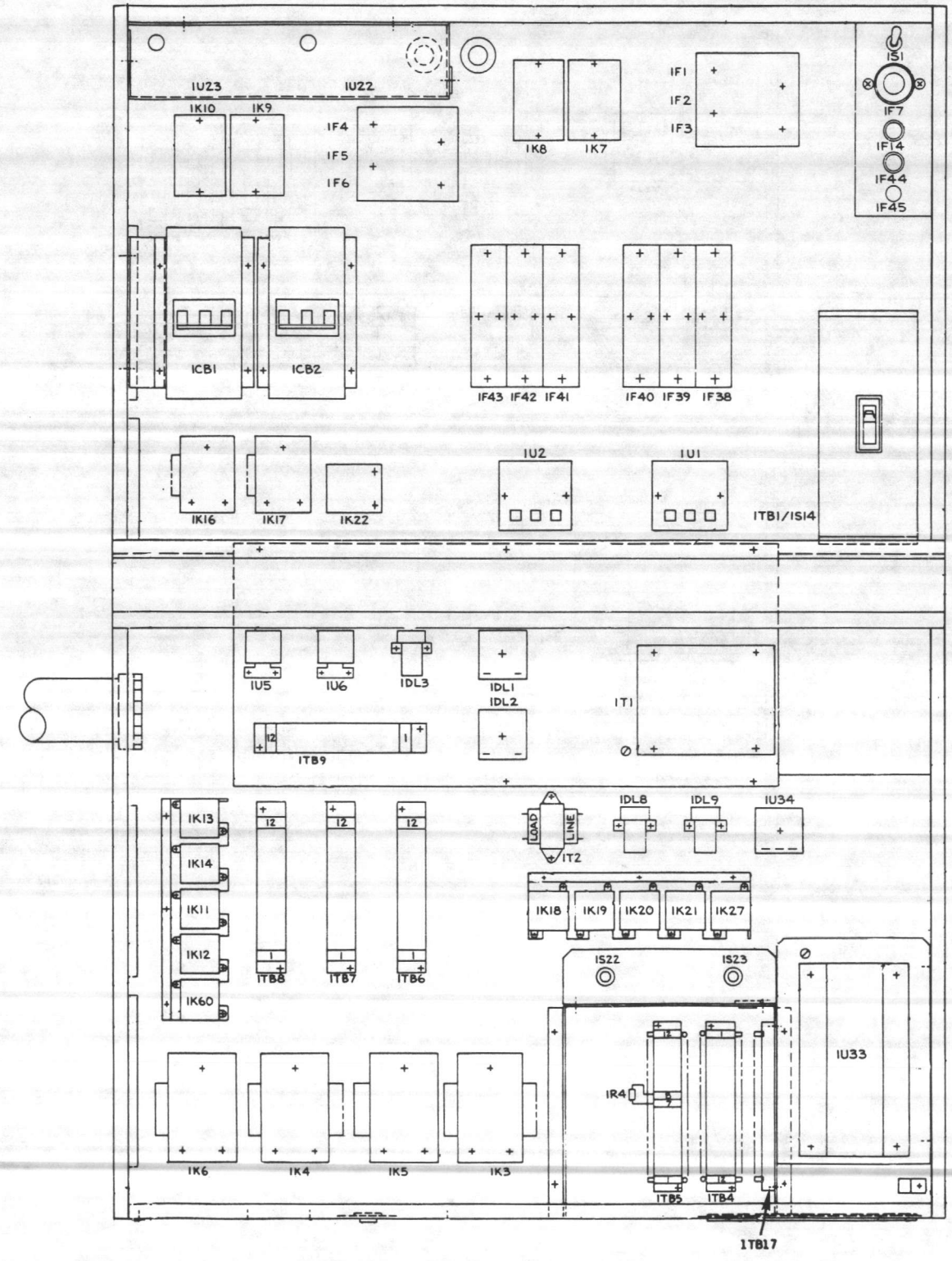

Starting the Unit in the Heating Mode (SBHC, SFHC)

1. Close the unit disconnect switch and open control switch 1S1.

2. Before proceeding with lighting or relighting, make certain that the toggle switch on the furnace control box is in the "OFF" position and that the manual gas valve at the furnace has been shut off for at least 5 minutes.

3. Turn the manual gas valve to the "ON" position.

4. Set the toggle switch on the furnace control box to the "ON" position. Set the room thermostat to the desired position. The furnace should now operate automatically.

Note: If the thermostat on 050 or 085 model furnaces is calling for heat and the furnace does not respond, press the manual reset button on the primary control. After a purge time of 60 seconds, burner ignition should occur.

Burner Adjustment

The establishment of proper gas pressure will vary according to the specific Btu content of the gas for a given location. For this reason, units should be set up according to the carbon dioxide (CO_2) and oxygen (O_2) content instead of gas pressure.

A proper air-fuel mixture must be maintained to insure efficient, safe and reliable combustion. The volume of air supplied by the combustion fan determines the amount of oxygen available for combustion. In conjunction with this, the manifold gas pressure determines the fuel input. The percentage of carbon dioxide produced as a combustion by-product is an important key in maintaining a good air-fuel mixture. By measuring the percent CO_2 (with a CO_2 analyzer), the air-fuel mixture can be adjusted until the specified CO_2 level is reached. A correct flame results in rated output, minimum production of carbon monoxide (CO) and a consistent flame that is unhampered by nuisance trip-outs.

In a typical heat exchanger, by maintaining a constant gas supply and varying the airflow (see Figure 41), combustion occurs as follows:

1. At zero percent O_2, a theoretical condition call "stoichiometric" combustion takes place. This means that the volume of O_2 supplied is the exact amount required to completely burn a given volume of supplied fuel. A reading of the flue gases would show zero percent O_2.

2. To achieve a good flame, some excess O_2 is required. As the percentage of O_2 increases, the percentage of CO_2 decreases.

3. To maintain a good flame, CO_2 readings should be taken and adjustments made to obtain the following:

   Natural gas - 9 to 9.5 percent CO_2

   Propane - 10 to 10.5 percent CO_2

Figure 41
Combustion Blower Air
Adjustment Damper Location

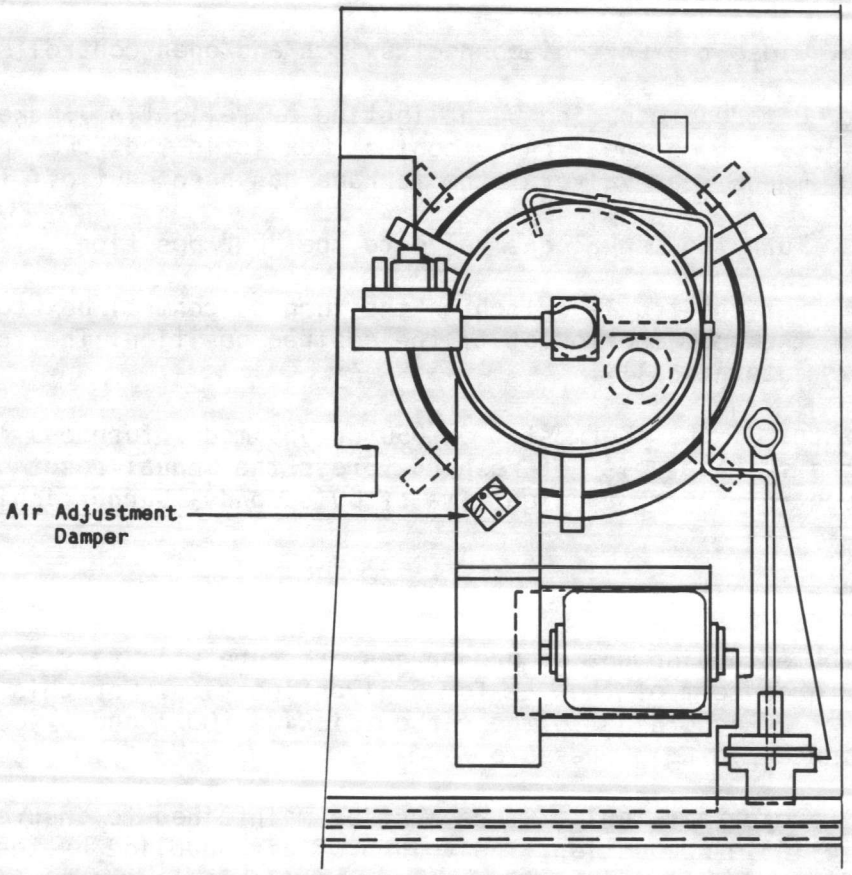

4. If the manifold pressure requires minor adjustment, remove the cap from the second stage pressure regulator and turn the adjustment screw clockwise to increase the pressure, or counterclockwise to decrease the pressure. The adjusted manifold pressure should not vary more than 10 percent from the pressures specified in Table 5.

   A normal flame has a well defined shape and is approximately 75 percent blue in color with orange tongues at the ends.

5. The CO_2 and O_2 samples must be taken at the furnace flue vent on the front of the furnace (see Figure 42). The tests should be conducted on high fire for each separate heat exchanger, after a five minute warm-up period.

   If the CO_2 readings are as specified and the flame does not appear to be proper, take O_2 readings to verify points on the curves in Figure 43. Readings should be approximately 4 to 5 percent O_2 for natural gas and approximately 5 to 6 percent O_2 for propane. CO_2 readings higher than specified imply inadequate airflow or excessive fuel. High CO_2 readings will result in incomplete combustion. Production of carbon monoxide can reach dangerous levels. Sooting occurs and the flame will appear as a bright yellow color. In extreme cases, unstable combustion and flame roll-out occurs. Due to heavy sooting, flue gases back up and starve the flame of needed oxygen for combustion. The flame will then roll out as it seeks oxygen to sustain combustion. In this case, the flame will be a hazy blue color with an undefined shape.

Figure 42
CO_2 Sampling
Probe Location

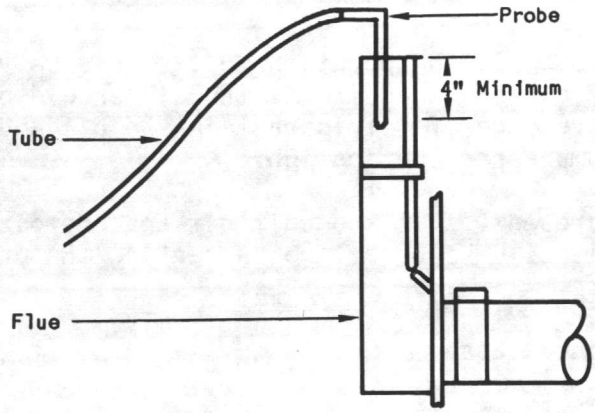

Figure 43
Natural Gas and Propane
Combustion Curves

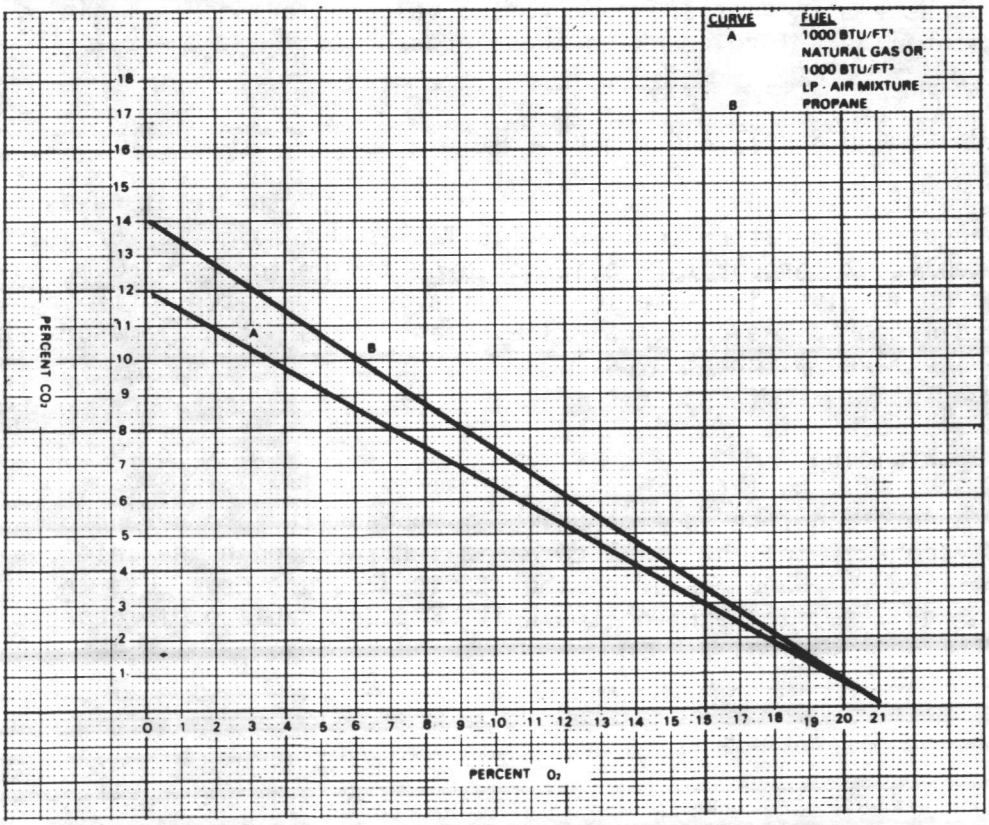

Oil Level

When the compressor is in operation, oil should be visible in the center of the oil level sight glass. In addition, the oil should be clear. Excessive foaming indicates the presence of refrigerant in the oil and will result in insufficient compressor lubrication.

If foaming is present, shut the unit off and energize the compressor crankcase heater for at least 8 hours before restarting the unit.

Liquid Line Sight Glass

After the unit has operated for a minimum of three minutes, check the liquid line sight glass(es). The flow of refrigerant past the glass should be clear and without bubbles.

If gas bubbles are present, either a restriction in the line or a shortage of refrigerant is indicated.

Operating Pressures

With the unit operating in the cooling mode, check the suction and discharge pressures and compare them to the values provided in Table 8. Allow the unit to stabilize before checking these pressures.

Balancing Supply and Exhaust Air

Adjust the supply and exhaust air fans with the inlet vanes open to provide the required operating CFM. Refer to Tables 9 through 11 for drive selections. Tables 12 through 15 provide data on fan performance. Component static pressure drop is given in Table 16. Once the variable pitch motor sheaves have been adjusted to the proper airflow, measure the pitch diameters and replace them with fixed pitch sheaves.

Determining CFM

To determine the rooftop unit CFM, obtain the pressure drop across the evaporator coil by drilling a small hole through the unit casing on each side of the coil and measuring the static pressure drop. Use this figure and Charts 1 and 2 to find the rooftop unit CFM. Use replaceable caps to plug the holes in the unit casing.

Fresh Air Dampers

The fresh air dampers must be adjusted to balance fresh air pressure against the pressure drop of the return air system. Outside air dampers are factory adjusted to deliver 100 percent outside air when the actuator is at full stroke. It is important to note that the dampers may not be fully open.

Table 8
Compressor Suction and Discharge Pressures (Saturation Temperature)

UNIT SIZE	DRY BULB ENT. EVAP.	WET BULB ENT. EVAP.	OUTDOOR AIR TEMP.	STANDARD AIR VOLUME - CFM 7000 SUCT. PRESS.	7000 DISCH. PRESS.	7500 SUCT. PRESS.	7500 DISCH. PRESS.	8000 SUCT. PRESS.	8000 DISCH. PRESS.	8500 SUCT. PRESS.	8500 DISCH. PRESS.	9000 SUCT. PRESS.	9000 DISCH. PRESS.
(TONS)	(F)	(F)	(F)	(F)	(F)	(F)	(F)	(F)	(F)	(F)	(F)	(F)	(F)
C20	75	61	85	59.7	245.2	60.5	246.2	61.2	247.1	61.9	248.0	62.5	248.8
	80	67	85	67.2	254.9	68.1	256.0	68.8	257.0	69.5	257.9	70.1	258.7
	90	73	85	75.3	265.4	76.2	266.6	77.0	267.6	77.8	268.6	78.4	269.4
	75	61	95	62.0	276.5	62.7	277.5	63.5	278.4	64.1	279.3	64.7	280.1
	80	67	95	69.7	286.6	70.5	287.6	71.2	288.6	71.8	289.4	72.4	290.2
	90	73	95	78.0	297.5	78.8	298.6	79.6	299.6	80.3	300.5	80.9	301.4
	75	61	105	64.3	310.6	65.1	311.6	65.8	312.5	66.5	313.4	67.1	314.2
	80	67	105	72.2	321.1	72.9	322.1	73.6	323.0	74.2	323.9	74.8	324.6
	90	73	105	80.6	332.4	81.5	333.5	82.2	334.5	82.9	335.5	83.5	336.3
	75	61	115	66.8	347.7	67.6	348.7	68.3	349.7	69.0	350.7	69.7	351.6
	80	67	115	74.8	358.6	75.5	359.6	76.1	360.5	76.7	361.3	77.3	362.1
	90	73	115	83.4	370.5	84.2	371.6	85.0	372.7	85.7	373.6	86.3	374.5
				8750		9500		10000		10500		11000	
C25	75	61	85	60.4	249.4	61.3	250.6	61.9	251.4	62.4	252.1	62.9	252.8
	80	67	85	67.9	259.4	68.9	260.7	69.5	261.5	70.1	262.3	70.6	262.9
	90	73	85	76.1	270.2	77.2	271.6	77.8	272.5	78.4	273.3	78.9	274.0
	75	61	95	62.6	280.8	63.5	282.0	64.1	282.8	64.6	283.5	65.1	284.2
	80	67	95	70.3	291.2	71.3	292.5	71.8	293.3	72.4	294.0	72.9	294.7
	90	73	95	78.7	302.5	79.7	303.9	80.3	304.7	80.9	305.4	81.4	306.2
	75	61	105	64.9	315.0	65.8	316.3	66.4	317.1	66.9	317.8	67.4	318.5
	80	67	105	72.8	325.9	73.7	327.1	74.3	327.9	74.8	328.6	75.2	329.2
	90	73	105	81.3	337.6	82.3	339.0	82.9	339.8	83.5	340.5	84.0	341.3
	75	61	115	67.3	352.3	68.3	353.6	68.9	354.4	69.4	355.2	70.0	355.9
	80	67	115	75.3	363.5	76.2	364.7	76.7	365.5	77.2	366.2	77.7	366.8
	90	73	115	84.1	375.8	85.0	377.2	85.6	378.0	86.2	378.8	86.7	379.6
				10500		11250		12000		12750		13500	
C30	75	61	85	60.9	263.3	61.7	264.5	62.4	265.6	63.1	266.6	63.7	267.5
	80	67	85	68.7	275.2	69.5	276.4	70.3	277.6	71.0	278.7	71.6	279.6
	90	73	85	77.1	288.0	78.0	289.4	78.8	290.6	79.5	291.7	80.2	292.7
	75	61	95	63.2	295.4	63.9	296.5	64.6	297.7	65.3	298.8	66.0	299.8
	80	67	95	71.1	307.7	31.9	309.0	72.6	310.1	73.3	311.2	73.9	312.1
	90	73	95	79.6	321.1	80.5	322.4	81.3	323.7	82.0	324.7	82.6	325.7
	75	61	105	65.5	330.3	66.3	331.5	67.0	332.7	67.7	333.8	68.4	334.9
	80	67	105	73.6	343.2	74.4	344.4	75.0	345.5	75.7	346.5	76.2	347.4
	90	73	105	82.3	357.2	83.2	358.5	83.9	359.7	84.6	360.7	85.2	361.8
	75	61	115	68.0	368.3	68.8	369.6	69.6	370.9	70.3	372.1	71.0	373.2
	80	67	115	76.2	381.7	76.9	382.9	77.6	384.0	78.2	385.0	78.7	385.9
	90	73	115	85.1	396.5	85.9	397.9	86.6	399.1	87.3	400.3	88.0	401.4
				14000		15000		16000		17000		18000	
C40	75	61	85	59.8	249.3	60.5	250.3	61.2	251.3	61.9	252.2	62.5	253.0
	80	67	85	67.3	259.4	68.1	260.5	68.8	261.5	69.5	262.4	70.1	263.2
	90	73	85	75.4	270.2	76.3	271.4	77.1	272.5	77.8	273.5	78.4	274.3
	75	61	95	62.0	281.1	62.8	282.1	63.5	283.1	64.1	284.0	64.8	284.8
	80	67	95	69.7	291.6	70.5	292.7	71.2	293.6	71.9	294.5	72.5	295.3
	90	73	95	78.0	302.9	78.9	304.1	79.6	305.1	80.3	306.1	81.0	306.9
	75	61	105	64.4	315.6	65.1	316.7	65.9	317.7	66.5	318.6	67.2	319.5
	80	67	105	72.2	326.6	73.0	327.6	73.7	328.6	74.3	329.5	74.9	330.3
	90	73	105	80.7	338.5	81.5	339.6	82.3	340.6	83.0	341.6	83.6	342.5
	75	61	115	66.9	353.2	67.7	354.3	68.4	355.3	69.1	356.3	69.7	357.3
	80	67	115	74.8	364.5	75.6	365.6	76.2	366.5	76.8	367.4	77.4	368.2
	90	73	115	83.5	377.1	84.3	378.2	85.1	379.3	85.8	380.3	86.4	381.3

(Continued on next page)

Table 8 (Continued)

Compressor Suction and Discharge Pressures (Saturation Temperature)

UNIT SIZE (TONS)	DRY BULB ENT. EVAP. (F)	WET BULB ENT. EVAP. (F)	STANDARD AIR VOLUME - CFM OUTDOOR AIR TEMP. (F)	17500 SUCT. PRESS. (F)	17500 DISCH. PRESS. (F)	18750 SUCT. PRESS. (F)	18750 DISCH. PRESS. (F)	20000 SUCT. PRESS. (F)	20000 DISCH. PRESS. (F)	21250 SUCT. PRESS. (F)	21250 DISCH. PRESS. (F)	22500 SUCT. PRESS. (F)	22500 DISCH. PRESS. (F)
	75	61	85	59.7	253.0	60.5	254.1	61.2	255.0	61.8	256.0	62.4	256.8
	80	67	85	67.2	263.4	68.0	264.5	68.7	265.5	69.4	266.5	70.0	267.3
	90	73	85	75.3	274.6	76.1	275.8	76.9	276.9	77.6	277.9	78.3	278.8
	75	61	95	61.9	284.6	62.7	285.7	63.4	286.7	64.1	287.6	64.7	288.5
	80	67	95	69.6	295.4	70.4	296.6	71.1	297.6	71.7	298.5	72.3	299.3
C50	90	73	95	77.9	207.1	78.7	308.3	79.5	309.4	80.1	310.3	80.8	311.2
	75	61	105	64.3	319.0	65.1	320.2	65.8	321.2	66.4	322.1	67.1	323.0
	80	67	105	72.1	330.3	72.9	331.4	73.5	332.4	74.2	333.3	74.7	334.0
	90	73	105	80.6	342.5	81.4	343.7	82.1	344.7	82.8	345.7	83.4	346.6
	75	61	115	66.8	356.6	67.6	357.7	68.3	358.8	69.0	359.8	69.6	360.8
	80	67	115	74.7	368.2	75.4	369.3	76.1	370.2	76.7	371.1	77.2	371.9
	90	73	115	83.3	381.0	84.1	382.2	84.9	383.3	85.6	384.3	86.2	385.3
				19250		20500		22000		23000		24000	
	75	61	85	57.3	266.7	57.9	267.8	58.7	269.1	59.1	269.8	59.6	270.5
	80	67	85	64.4	278.5	65.2	279.7	66.0	281.0	66.5	281.8	66.9	282.6
	90	73	85	72.2	291.3	73.0	292.6	73.9	294.0	74.4	294.8	74.9	295.6
	75	61	95	59.6	299.0	60.2	300.1	61.0	301.4	61.5	302.2	61.9	302.9
	80	67	95	67.0	311.3	67.7	312.5	68.5	313.8	68.9	314.6	69.4	315.3
C55	90	73	95	75.0	324.6	75.7	325.9	76.6	327.3	77.1	328.1	77.5	328.9
	75	61	105	62.0	334.1	82.7	335.3	63.5	336.5	63.9	337.3	64.4	338.1
	80	67	105	69.6	347.0	70.3	348.2	71.0	349.4	71.5	350.2	71.9	350.9
	90	73	105	77.8	360.9	78.5	362.2	79.3	363.5	79.8	364.3	80.3	365.1
	75	61	115	64.6	372.4	65.3	373.6	66.1	374.9	66.6	375.7	67.0	376.5
	80	67	115	72.4	385.8	73.0	386.9	73.7	388.1	74.2	388.9	74.6	389.6
	90	73	115	80.8	400.5	81.5	401.7	82.3	403.1	82.7	404.0	83.2	404.8
				21000		22500		24000		25500		27000	
	75	61	85	60.3	250.7	61.1	251.8	61.8	252.8	62.5	253.7	63.1	254.5
	80	67	85	67.9	260.8	68.7	262.0	69.4	262.9	70.1	263.8	70.7	264.7
	90	73	85	76.0	271.8	76.9	272.9	77.7	274.0	78.4	274.9	79.1	275.8
	75	61	95	62.6	282.5	63.4	283.6	64.1	284.6	64.8	285.5	65.4	286.4
	80	67	95	70.3	293.1	71.1	294.2	71.8	295.1	72.4	296.0	73.0	296.8
C60	90	73	95	78.6	304.5	79.5	305.6	80.2	306.7	80.9	307.6	81.6	308.5
	75	61	105	65.0	317.2	65.7	318.3	66.5	319.3	67.1	320.2	67.8	321.1
	80	67	105	72.8	328.1	73.5	329.2	74.2	330.1	74.8	331.0	75.4	331.8
	90	73	105	81.3	340.0	82.1	341.2	82.9	342.3	83.6	343.2	84.3	344.2
	75	61	115	67.5	354.8	68.2	355.9	69.0	357.0	69.7	358.0	70.4	359.0
	80	67	115	75.3	366.1	76.1	367.1	76.7	368.1	77.3	369.0	77.9	369.8
	90	73	115	84.1	378.8	84.9	379.9	85.7	381.0	86.4	382.1	87.1	383.0
				20000		22000		24000		26000		28000	
	75	61	85	56.3	261.3	57.4	263.1	58.4	264.7	59.3	266.1	60.1	267.4
	80	67	85	63.3	272.6	64.6	274.6	65.6	276.3	66.6	277.7	67.4	279.0
	90	73	85	71.0	284.8	72.3	286.9	73.5	288.7	74.5	290.2	75.4	291.6
	75	61	95	58.3	295.0	59.4	296.9	60.4	298.5	61.3	300.0	62.1	301.3
	80	67	95	65.5	306.9	66.8	308.9	67.8	310.6	68.7	312.1	69.5	313.3
C75	90	73	95	73.4	319.7	74.7	321.8	75.8	323.6	76.8	325.2	77.7	326.6
	75	61	105	60.5	331.6	61.7	333.5	62.6	335.1	63.5	336.6	64.3	338.0
	80	67	105	68.0	344.1	69.2	346.0	70.2	347.7	71.0	349.2	71.8	350.5
	90	73	105	76.1	357.6	77.3	359.8	78.4	361.6	79.3	363.2	80.2	364.6
	75	61	115	63.0	371.2	64.2	373.1	65.1	374.8	66.0	376.3	66.8	377.7
	80	67	115	70.7	384.3	71.8	386.3	72.8	388.0	73.6	389.4	74.4	390.8
	90	73	115	79.0	399.0	77.3	359.8	81.2	403.1	82.0	404.8	83.0	406.3

(Continued from previous page)

Table 9
Supply Air Fan
Drive Selections

	3 HP		5 HP		7.5 HP		10 HP		15 HP		20 HP		25 HP		30 HP		40 HP	
Unit Size	Drive No.	RPM Range	Drive No.	RPM Range	Drive No.	RPM Range	Drive No.	RPM Range	Drive No.	RPM Range	Drive No.	RPM Range	Drive No.	RPM Range	Drive No.	RPM Range	Drive No.	RPM Range
C20	5	583-729	6	760-987	5	805-980	5	1020-1229	-	-	-	-	-	-	-	-	-	-
	6	736-921	7	846-1042	6	1006-1255	6	1159-1395	-	-	-	-	-	-	-	-	-	-
	-	-	-	-	7	1150-1400	-	-	-	-	-	-	-	-	-	-	-	-
C25	5	583-729	5	606-748	5	805-980	5	1020-1229	6	1144-1346	-	-	-	-	-	-	-	-
	6	736-921	6	760-987	6	1006-1255	6	1159-1395	7	1346-1582	-	-	-	-	-	-	-	-
	-	-	7	846-1042	7	1150-1400	-	-	-	-	-	-	-	-	-	-	-	-
C30	-	-	4	606-748	5	670-816	5	824-992	5	759-1129	7	1129-1326	-	-	-	-	-	-
	-	-	5	760-987	6	805-980	6	1020-1229	6	1044-1228	-	-	-	-	-	-	-	-
C40	-	-	-	-	3	557-670	4	705-861	4	772-909	4	896-1094	4	896-1094	-	-	-	-
	-	-	-	-	4	705-861	5	824-992	5	888-1044	-	-	5	1006-1199	-	-	-	-
C50/ C55	-	-	-	-	3	557-670	3	556-670	3	646-760	3	787-984	4	896-1054	4	896-1094	-	-
	-	-	-	-	4	705-670	4	705-861	4	772-909	4	896-1094	-	-	5	1006-1199	-	-
C60	-	-	-	-	-	-	4	556-670	3	595-700	4	700-875	4	700-875	4	805-962	6	972-1050
	-	-	-	-	-	-	5	691-832	4	630-788	5	788-985	5	788-985	-	-	-	-
	-	-	-	-	-	-	-	-	5	772-909	-	-	-	-	-	-	-	-
C75	-	-	-	-	-	-	4	556-670	3	595-700	4	700-875	4	700-875	4	805-962	6	972-1050
	-	-	-	-	-	-	5	691-832	4	630-788	5	788-985	5	788-985	5	894-1070	-	-
	-	-	-	-	-	-	-	-	5	772-909	-	-	-	-	-	-	-	-

Table 10
Exhaust Air Fan Drive
Selections (50% Exhaust)

UNIT SIZE	1½ HP		3 HP		5 HP		7½ HP	
	RPM RANGE	DR NO	RPM RANGE	DR NO	RPM RANGE	DR NO	RPM RANGE	DR NO
C20 Ton	495-641 626-810	5 6	736-921	6				
C25 Ton	495-641 626-810	5 6	736-921	6				
C30 Ton			583-736 736-921	5 6	846-1042	7		
C40 Ton					488-602 602-748	3 4	670-816	5
C50 and C55 Ton					602-748	4	670-816	5
C60 and C75 Ton					488-602	6	619-753	7

Table 11
Exhaust Air Fan
Drive Selections (100% Exhaust)

Unit Size	1.5 HP		3 HP		5 HP		7.5 HP		10 HP		15 HP		20 HP	
	Drive No.	RPM Range	Drive No.	RPM Range	Drive No.	RPM Range	Drive No.	RPM Range	Drive No.	RPM Range	Drive No.	RPM Range	Drive No.	RPM Range
C20	5	495-641	5	583-729	-	-	-	-	-	-	-	-	-	-
	-	-	6	736-921	-	-	-	-	-	-	-	-	-	-
C25	-	-	5	583-729	6	760-937	-	-	-	-	-	-	-	-
	-	-	6	736-921	7	846-1042	-	-	-	-	-	-	-	-
C30	-	-	5	583-729	6	760-937	5	805-980	-	-	-	-	-	-
	-	-	6	736-921	7	846-1042	6	1006-1225	-	-	-	-	-	-
C40	-	-	-	-	3	488-602	3	556-670	4	691-832	-	-	-	-
	-	-	-	-	4	606-748	5	670-816	5	824-992	-	-	-	-
C50	-	-	-	-	3	488-602	3	556-670	3	556-670	3	772-909	-	-
	-	-	-	-	4	606-748	5	670-816	4	691-832	-	-	-	-
C55	-	-	-	-	3	488-602	3	556-670	3	556-670	3	772-909	-	-
	-	-	-	-	4	606-748	5	670-816	4	691-832	-	-	-	-
C60/ C75	-	-	-	-	6	488-602	2	466-561	3	556-670	3	646-760	3	787-984
	-	-	-	-	-	-	3	557-670						

Table 12
Exhaust Fan Performance (50% Exhaust)

UNIT SIZE	CFM STD. AIR	NEGATIVE STATIC PRESSURE													
		0.200		0.400		0.600		0.800		1.000		1.200		1.400	
		RPM	BHP	RPM	BHP	RPM	BHP	RPM	BHP	RPM	BHP	RPM	BHP	RPM	BHP
C20 And C25	2000.	364	0.17	487	0.30	582	0.45	658	0.58	731	0.73	797	0.90	856	1.08
	3000.	435	0.36	522	0.51	614	0.67	694	0.88	765	1.11	830	1.34	886	1.54
	4000.	529	0.76	592	0.86	654	1.03	728	1.29	797	1.51	861	1.77	919	2.05
	5000.	623	1.32	687	1.56	735	1.67	778	1.79	836	2.13	896	2.45	953	2.72
	6000.	722	2.13	779	2.47	830	2.72	890	2.86	905	2.96				
C30	2000.	364	0.17	487	0.30	582	0.45	658	0.58	731	0.73	797	0.90	856	1.08
	3000.	435	0.36	522	0.51	614	0.67	694	0.88	765	1.11	830	1.34	886	1.54
	4000.	529	0.76	592	0.86	654	1.03	728	1.29	797	1.51	861	1.77	919	2.05
	5000.	623	1.32	687	1.56	735	1.67	778	1.79	836	2.13	896	2.45	953	2.72
	6000.	722	2.13	779	2.47	830	2.72	870	2.86	905	2.96	944	3.16	994	3.59
	7000.	824	3.23	874	3.64	922	4.02	965	4.30	1000	4.48	1032	4.59	1062	4.72
C40	3000.	288	0.22	393	0.38	477	0.55	547	0.74	611	0.94	668	1.16	721	1.39
	5000.	372	0.66	430	0.83	495	1.05	557	1.29	621	1.57	680	1.87	732	2.16
	7000.	472	1.55	522	1.82	563	2.04	606	2.29	653	2.59	698	2.91	742	3.24
	9000.	578	3.06	621	3.41	661	3.76	695	4.06	725	4.34	758	4.65	794	5.01
	11000.	688	5.36	725	5.80	760	6.24	793	6.66	823	7.06	850	7.42	875	7.76
C50 and C55	3000.	288	0.22	393	0.38	477	0.55	547	0.74	611	0.94	668	1.16	721	1.39
	5000.	372	0.66	430	0.83	495	1.05	557	1.29	621	1.57	680	1.87	732	2.16
	7000.	472	1.55	522	1.82	563	2.04	606	2.29	653	2.59	698	2.91	742	3.24
	9000.	578	3.06	621	3.41	661	3.76	695	4.06	725	4.34	758	4.65	794	5.01
	11000.	688	5.36	725	5.80	760	6.24	793	6.66	823	7.06	850	7.42	875	7.76
C60 and C75	4000.	271	0.29	364	0.54	438	0.82	499	1.07	550	1.30	601	1.56	651	1.87
	6000.	339	0.71	391	0.90	456	1.22	517	1.60	572	2.01	622	2.43	668	2.85
	8000.	425	1.55	460	1.73	497	1.96	542	2.30	591	2.72	639	3.20	684	3.73
	10000.	517	2.88	543	3.13	571	3.34	600	3.59	632	3.94	668	4.37	707	4.87
	12000.	612	4.84	633	5.15	655	5.43	678	5.68	702	5.95	726	6.29	752	6.91
	13000.	659	6.09	679	6.44	699	6.76	720	7.04	741	7.31				

NOTES:

1. Shaded areas indicate non-standard drive selections. These drive selections must be manually factory selected.

Table 13
Exhaust Fan Performance
(100% Exhaust)

UNIT NOMINAL TONS	CFM STD. AIR	NEGATIVE STATIC PRESSURE															
		0.250		0.500		0.750		1.000		1.250		1.500		1.750		2.000	
		RPM	BHP	RPM	BHP	RPM	BHP	RPM	BHP	RPM	BHP	RPM	BHP	RPM	BHP	RPM	BHP
C20	4000.	399	0.38	538	0.75	640	1.08	730	1.45	811	1.87	882	2.34	947	2.88		
	6000.	453	0.74	570	1.17	675	1.65	765	2.22	845	2.78						
	8000.	547	1.59	619	1.81	711	2.48	797	3.01								
	10000.	640	2.79														
	12000.																
	14000.																
C25	4000.	399	0.38	538	0.75	640	1.08	730	1.45	811	1.87	882	2.34	947	2.88	1017	3.55
	6000.	453	0.74	570	1.17	675	1.65	765	2.22	845	2.78	912	3.27	975	3.77	1036	4.30
	8000.	547	1.59	619	1.81	711	2.48	797	3.01	876	3.66	947	4.40				
	10000.	640	2.79	712	3.25	767	3.48	837	4.26	911	5.04						
	12000.	737	4.44														
	14000.																
C30	4000.	399	0.38	538	0.75	640	1.08	730	1.45	811	1.87	882	2.34	947	2.88	1017	3.55
	6000.	453	0.74	570	1.17	675	1.65	765	2.22	845	2.78	912	3.27	975	3.77	1036	4.30
	8000.	547	1.59	619	1.81	711	2.48	797	3.01	876	3.66	947	4.40	1013	5.18	1075	5.94
	10000.	640	2.79	712	3.25	767	3.48	837	4.26	911	5.04	980	5.70	1045	6.46	1106	7.31
	12000.	737	4.44	806	5.22	860	5.64	905	5.89	956	6.49						
	14000.	837	6.67														
C40	7500.	334	0.75	438	1.21	535	1.77	616	2.35	686	2.98	750	3.64	809	4.34	864	5.06
	9000.	362	1.09	449	1.57	536	2.16	618	2.84	689	3.52	753	4.24	812	4.99	867	5.77
	12000.	435	2.19	496	2.70	563	3.35	628	4.04	693	4.83	757	5.71	817	6.63	873	8.53
	14000.	486	3.22	542	3.86	594	4.47	653	5.25	707	6.04	763	6.91	819	7.86	874	8.89
	16000.	537	4.55	592	5.35	636	6.00	683	6.74	735	7.64	783	8.53	831	9.47	880	10.48
C50	9000.	362	1.09	449	1.57	536	2.16	618	2.84	689	3.52	753	4.24	812	4.99	867	5.77
	12000.	435	2.19	496	2.70	563	3.35	628	4.04	693	4.83	757	5.71	817	6.63	873	7.53
	15000.	511	3.85	567	4.56	614	5.18	667	5.96	720	6.80	771	7.66	824	8.60	876	9.63
	18000.	590	6.21	642	7.16	685	7.97	724	8.69	766	9.54	812	10.54	856	11.55	898	12.56
	20000.	644	8.26	692	9.35	735	10.33	772	11.17	807	11.97	844	12.91	885	14.00	926	15.13
C55	10000.	386	1.40	463	1.90	540	2.48	618	3.18	691	3.94	755	4.70	814	5.48	869	6.30
	13000.	461	2.67	518	3.23	578	3.88	639	4.61	698	5.39	759	6.26	818	8.22	874	8.21
	16000.	537	4.55	592	5.35	636	6.00	683	6.74	735	7.64	783	8.53	831	9.47	880	10.48
	19000.	617	7.19	667	8.21	710	9.10	747	9.87	785	10.68	827	11.66	870	12.73	911	13.80
	21500.	685	10.08	731	11.26	772	12.36	809	13.33	842	14.20	874	15.08	910	16.10	948	17.28
C60 and C75	12000.	351	1.49	423	2.09	502	3.00	572	4.02	634	5.07	690	6.09	740	7.04	784	7.91
	15000.	412	2.68	460	3.15	521	3.96	585	5.02	646	6.24	702	7.53	754	8.83	801	10.14
	18000.	488	4.50	516	4.88	557	5.54	607	6.49	662	7.66	715	9.01	766	10.48	814	12.01
	21000.	547	6.75	578	7.36	612	7.92	647	8.71	688	9.77	735	11.03	781	12.46	827	14.03
	24000.	617	9.83	644	10.59	672	11.22	702	11.88	732	12.77	766	13.89	805	15.22		

NOTES:
1. Shaded areas indicate non-standard drive selections; these drive selections must be manually factory selected.

Table 14
Supply Air Fan Performance
(20 through 60 Ton Units)

	CFM STD AIR	TOTAL STATIC PRESSURE — IN. WG																													
		0.250		0.500		0.750		1.000		1.250		1.500		1.750		2.000		2.250		2.500		2.750		3.000		3.250		3.500		3.750		4.000	
		RPM	BHP	RPM	BHP	RPM	BHP	RPM	BHP	RPM	BHP	RPM	BHP	RPM	BHP	RPM	BHP	RPM	BHP	RPM	BHP	RPM	BHP	RPM	BHP	RPM	BHP	RPM	BHP	RPM	BHP
20	4000.	418	0.42	545	0.74	654	1.12	744	1.55	819	1.97	890	2.45	956	2.96	1017	3.48	1070	3.98	1117	4.46	1158	4.92	1197	5.37	1235	5.84	1274	6.35	1313	6.90	1353	7.49
	5000.	454	0.63	570	0.98	669	1.38	760	1.84	842	2.35	914	2.88	976	3.41	1034	3.96	1091	4.55	1146	5.17	1198	5.81	1248	6.46	1293	7.11	1336	7.74	1374	8.35	1409	8.93
	6000.	496	0.91	603	1.31	694	1.74	777	2.21	856	2.74	929	3.32	997	3.94	1060	4.57	1116	5.20	1167	5.83	1216	6.48	1264	7.17	1311	7.88	1357	8.62	1402	9.39	1445	10.16
	7000.	544	1.29	639	1.74	726	2.21	804	2.71	876	3.25	945	3.84	1011	4.48	1073	5.16	1133	5.87	1190	6.60	1242	7.34	1291	8.07	1336	8.81	1378	9.55	1420	10.31	1461	11.10
	8000.	593	1.76	680	2.27	761	2.80	836	3.35	904	3.92	968	4.51	1030	5.16	1090	5.85	1147	6.58	1202	7.34	1256	8.14	1307	8.96	1357	9.79	1403	10.64	1447	11.48	1488	12.33
	9000.	645	2.35	726	2.93	800	3.51	870	4.11	936	4.72	998	5.36	1056	6.02	1112	6.71	1166	7.45	1219	8.23	1271	9.04	1321	9.88	1369	10.75	1417	11.65	1462	12.58	1507	13.51
25	5000	434	0.58	554	0.93	655	1.31	745	1.75	830	2.25	908	2.79	977	3.35	1036	3.89	1085	4.40	1131	4.91	1176	5.47	1223	6.09	1270	6.76	1319	7.49	1368	8.28	1418	9.14
	6000	471	0.83	582	1.24	676	1.65	760	2.11	839	2.61	911	3.16	982	3.75	1049	4.40	1112	5.06	1168	5.73	1219	6.38	1264	7.01	1304	7.62	1342	8.24	1379	8.88	1418	9.57
	7000	515	1.17	611	1.60	703	2.09	782	2.58	856	3.10	925	3.66	991	4.26	1053	4.90	1114	5.58	1173	6.31	1230	7.06	1284	7.84	1334	8.62	1381	9.39	1423	10.15	1462	10.89
	8000	562	1.60	647	2.07	731	2.61	809	3.17	879	3.72	944	4.30	1007	4.92	1067	5.57	1125	6.26	1179	6.97	1233	7.73	1286	8.53	1338	9.36	1388	10.22	1436	11.10	1482	11.99
	9000	609	2.13	688	2.65	753	3.22	837	3.84	906	4.47	969	5.10	1028	5.73	1085	6.40	1141	7.10	1194	7.84	1246	8.60	1295	9.39	1343	10.21	1391	11.07	1438	11.97	1484	12.89
	10000	658	2.77	733	3.37	800	3.96	868	4.61	934	5.31	997	6.01	1055	6.71	1109	7.40	1161	8.12	1212	8.87	1262	9.65	1310	10.47	1357	11.30	1403	12.16	1447	13.05	1490	13.98
	11000	708	3.54	780	4.21	842	4.85	902	5.52	964	6.26	1025	7.03	1082	7.80	1136	8.57	1186	9.33	1235	10.10	1282	10.89	1329	11.72	1374	12.58	1419	13.46	1462	14.37		
30	6000	360	0.62	468	1.05	565	1.59	649	2.19	720	2.79	775	3.33	823	3.86	869	4.44	915	5.05	959	5.69	1000	6.35	1039	7.03	1076	7.71	1111	8.41	1144	9.11	1176	9.84
	7000	384	0.83	481	1.28	570	1.82	653	2.46	727	3.15	793	3.86	850	4.55	897	5.19	938	5.80	979	6.44	1019	7.12	1058	7.83	1096	8.57	1132	9.33	1168	10.10	1201	10.89
	8000	412	1.09	499	1.57	581	2.13	658	2.78	731	3.50	797	4.27	859	5.08	915	5.90	965	6.68	1007	7.42	1045	8.13	1081	8.83	1117	9.57	1152	10.33	1186	11.13	1220	11.96
	9000	442	1.43	521	1.94	596	2.52	667	3.17	736	3.90	801	4.70	863	5.56	920	6.45	974	7.36	1024	8.28	1069	9.17	1109	10.03	1145	10.84	1179	11.63	1210	12.42	1242	13.24
	10000	474	1.83	546	2.38	615	2.99	681	3.66	745	4.40	807	5.21	867	6.08	924	7.01	977	7.97	1028	8.97	1077	9.99	1123	11.01	1165	12.01	1203	12.99	1239	13.92	1271	14.83
	11000	507	2.32	573	2.90	637	3.54	699	4.24	769	4.99	817	5.81	874	6.69	928	7.63	981	8.62	1032	9.66	1080	10.73	1127	11.82	1171	12.94	1214	14.07	1254	15.18	1291	16.28
	12000	541	2.89	603	3.51	662	4.18	720	4.91	776	5.69	830	6.52	884	7.41	936	8.36	987	9.36	1036	10.42	1084	11.52	1130	12.65	1175	13.82	1217	15.01	1259	16.22	1299	17.45
	13000	575	3.55	634	4.23	689	4.93	743	5.69	796	6.49	847	7.34	898	8.25	947	9.20	996	10.22	1043	11.28	1089	12.39	1135	13.55	1179	14.75	1221	15.98	1262	17.24	1302	18.52
	13500	593	3.94	650	4.64	703	5.45	756	6.13	807	6.95	857	7.82	906	8.73	954	9.69	1002	10.71	1048	11.78	1093	12.89	1138	14.06	1181	15.26	1223	16.51	1264	17.74	1304	19.02
40	8000	327	0.85	427	1.50	507	2.21	578	2.99	638	3.76	692	4.57	742	5.41	789	6.29	833	7.21	875	8.18	914	9.18	950	10.20	982	11.21	1012	12.21	1040	13.21	1067	14.23
	9000	340	1.02	437	1.74	515	2.50	584	3.32	647	4.20	701	5.07	750	5.95	797	6.88	841	7.84	883	8.83	922	9.85	961	10.93	997	12.03	1031	13.16	1063	14.30	1093	15.44
	10000	353	1.21	448	2.00	525	2.82	591	3.68	653	4.62	709	5.59	760	6.56	805	7.52	849	8.53	891	9.57	930	10.63	968	11.72	1004	12.84	1040	14.01	1073	15.21	1106	16.44
	11000	369	1.45	459	2.29	535	3.18	601	4.10	659	5.06	716	6.09	768	7.16	815	8.22	858	9.28	899	10.36	938	11.47	976	12.62	1012	13.78	1047	14.97	1081	16.19	1114	17.43
	12000	387	1.74	471	2.62	545	3.56	611	4.56	668	5.56	722	6.62	774	7.74	822	8.90	867	10.07	908	11.23	947	12.39	984	13.57	1020	14.78	1055	16.02	1089	17.29	1122	18.58
	13000	408	2.10	484	2.97	557	3.99	621	5.04	679	6.12	731	7.22	780	8.37	828	9.58	874	10.83	916	12.09	956	13.35	994	14.61	1029	15.86	1063	17.14	1097	18.45	1129	19.79
	14000	430	2.51	497	3.36	569	4.46	631	5.56	689	6.71	741	7.88	789	9.07	835	10.30	880	11.59	923	12.93	964	14.29	1002	15.65	1039	17.01	1073	18.36	1106	19.71	1138	21.08
	15000	454	3.00	512	3.81	581	4.96	643	6.14	699	7.34	751	8.58	799	9.84	844	11.10	887	12.42	929	13.79	969	15.21	1009	16.65	1046	18.11	1082	19.57	1115	21.03	1147	22.47
	16000	478	3.55	530	4.33	594	5.49	655	6.75	710	8.01	761	9.31	809	10.64	854	11.98	896	13.33	936	14.73	976	16.17	1015	17.67	1052	19.20	1088	20.75	1123	22.31	1156	23.87
	17000	502	4.18	549	4.93	607	6.08	667	7.41	722	8.75	772	10.10	819	11.49	864	12.90	906	14.33	946	15.76	984	17.23	1021	18.75	1058	20.32	1094	21.93	1129	23.56		
	18000	527	4.88	569	5.63	622	6.72	680	8.11	734	9.53	783	10.94	830	12.38	874	13.86	916	15.36	956	16.87	993	18.39	1030	19.93	1065	21.52	1101	23.16	1135	24.84		
50	10000	342	1.19	443	1.98	514	2.70	577	3.45	635	4.24	689	5.09	742	6.02	794	7.03	842	8.09	887	9.18	927	10.28	965	11.37	1000	12.47	1034	13.59	1067	14.74	1099	15.90
	12000	375	1.71	460	2.56	539	3.53	600	4.39	654	5.26	705	6.18	753	7.13	798	8.11	843	9.17	887	10.31	931	11.50	972	12.75	1012	14.03	1050	15.34	1085	16.65	1118	17.96
	14000	415	2.44	482	3.29	557	4.39	624	5.51	678	6.53	726	7.52	771	8.55	815	9.62	857	10.72	897	11.85	936	13.01	974	14.25	1012	15.54	1050	16.90	1087	18.31	1123	19.76
	16000	458	3.40	513	4.26	576	5.37	642	6.65	702	7.94	752	9.14	795	10.27	836	11.41	876	12.59	914	13.81	952	15.05	988	16.31	1023	17.60	1057	18.93	1091	20.30	1124	21.74
	18000	503	4.62	551	5.50	603	6.61	660	7.92	719	9.38	773	10.84	821	12.23	862	13.54	900	14.80	936	16.08	972	17.40	1006	18.76	1040	20.14	1073	21.54	1105	22.96	1137	24.40
	20000	550	6.14	591	7.05	636	8.16	685	9.47	737	10.96	790	12.58	840	14.21	885	15.80	926	17.31	962	18.75	996	20.14	1029	21.56	1061	23.01	1093	24.50	1124	26.01	1154	27.54
	22000	597	7.97	634	8.93	673	10.05	715	11.36	761	12.86	808	14.50	856	16.27	903	18.07	946	19.85	986	21.57	1022	23.22	1055	24.79	1086	26.33	1116	27.88	1146	29.46		
	22500	609	8.52	645	9.49	703	10.61	724	11.93	768	13.43	814	15.07	861	16.85	907	18.67	950	20.50	991	22.28	1027	23.97	1061	25.64	1093	27.24	1123	28.84				
55	10000	342	1.19	443	1.98	514	2.70	577	3.45	635	4.24	689	5.09	742	6.02	794	7.03	842	8.09	887	9.18	927	10.28	965	11.37	1000	12.47	1034	13.59	1067	14.74	1099	15.90
	12000	375	1.71	460	2.56	539	3.53	600	4.39	654	5.26	705	6.18	753	7.13	798	8.11	843	9.17	887	10.31	931	11.50	972	12.75	1012	14.03	1050	15.34	1085	16.65	1118	17.96
	14000	415	2.44	482	3.29	557	4.39	624	5.51	678	6.53	726	7.52	771	8.55	815	9.62	857	10.72	897	11.85	936	13.01	974	14.25	1012	15.54	1050	16.90	1087	18.31	1123	19.76
	16000	458	3.40	513	4.26	576	5.37	642	6.65	702	7.94	752	9.14	795	10.27	836	11.41	876	12.59	914	13.81	952	15.05	988	16.31	1023	17.60	1057	18.93	1091	20.30	1124	21.74
	18000	503	4.62	551	5.50	603	6.61	660	7.92	719	9.38	773	10.84	821	12.23	862	13.54	900	14.80	936	16.08	972	17.40	1006	18.76	1040	20.14	1073	21.54	1105	22.96	1137	24.40
	20000	550	6.14	591	7.05	636	8.16	685	9.47	737	10.96	790	12.58	840	14.21	885	15.80	926	17.31	962	18.75	996	20.14	1029	21.56	1061	23.01	1093	24.50	1124	26.01	1154	27.54
	22000	597	7.97	634	8.93	673	10.05	715	11.36	761	12.86	808	14.50	856	16.27	903	18.07	946	19.85	986	21.57	1022	23.22	1055	24.79	1086	26.33	1116	27.88	1146	29.46		
	22500	609	8.52	645	9.49	683	10.61	724	11.93	768	13.43	814	15.07	861	16.85	907	18.67	950	20.50	991	22.28	1027	23.97	1061	25.64	1093	27.24	1123	28.84				
	24000	645	10.15	679	11.18	714	12.32	751	13.63	790	15.12	832	16.77	875	18.57	920	20.47	963	22.44	1004	24.40												
60	14000	346	2.05	422	2.99	495	4.11	555	5.31	604	6.58	648	7.86	689	9.11	727	10.37	762	11.68	795	12.99	826	14.31	855	15.63	882	16.97	909	18.36	935	19.79	960	21.25
	16000	376	2.79	441	3.74	508	4.96	570	6.24	623	7.61	668	9.05	709	10.51	747	11.96	782	13.39	816	14.83	848	16.30	878	17.79	907	19.30	934	20.80	960	22.31	985	23.82
	18000	408	3.71	464	4.72	524	5.92	583	7.35	638	8.80	687	10.32	729	11.92	766	13.55	802	15.20	836	16.83	868	18.44	898	20.04	928	21.67	956	23.33	983	25.01	1009	26.70
	20000	441	4.84	492	5.92	544	7.13	598	8.58	651	10.18	701	11.79	746	13.45	786	15.19	822	16.99	856	18.81	888	20.64	919	22.46	948	24.25	976	26.03	1003	27.82	1030	29.64
	22000	474	6.20	522	7.37	568	8.62	617	10.04	666	11.70	714	13.46	760	15.22	802	17.02	841	18.90	875	20.85	908	22.83	938	24.84	968	26.85	996	28.85	1023	30.84	1050	32.81
	24000	508	7.81	554	9.08	595	10.39	639	11.83	684	13.44	729	15.28	773	17.21	815	19.13	855	21.06	893	23.07	927	25.15	958	27.28	988	29.45	1016	31.63	1043	33.82		
	26000	542	9.69	586	11.06	625	12.46	664	13.93	704	15.54	746	17.34	788	19.34	828	21.43	868	23.51	906	25.59	942	27.72	975	29.91	1007	32.18	1036	34.49				
	27000	560	10.78	602	12.20	641	13.65	678	15.15	716	16.78	756	18.56	797	20.54	836	22.66	875	24.83	913	26.99	949	29.17	982	31.38	1015	33.68	1045	36.03				

NOTES:

1. Shaded areas indicate non-standard drive selection.

Figure 42
CO_2 Sampling
Probe Location

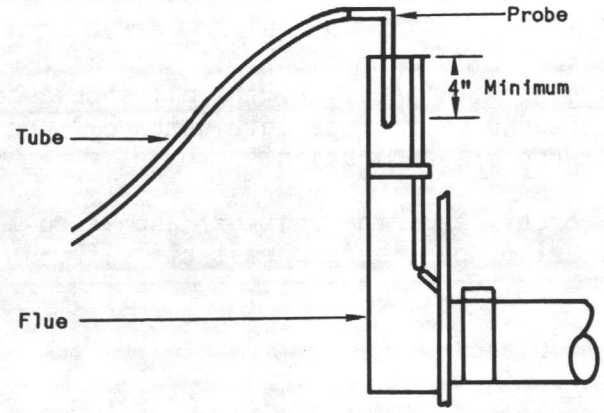

Figure 43
Natural Gas and Propane
Combustion Curves

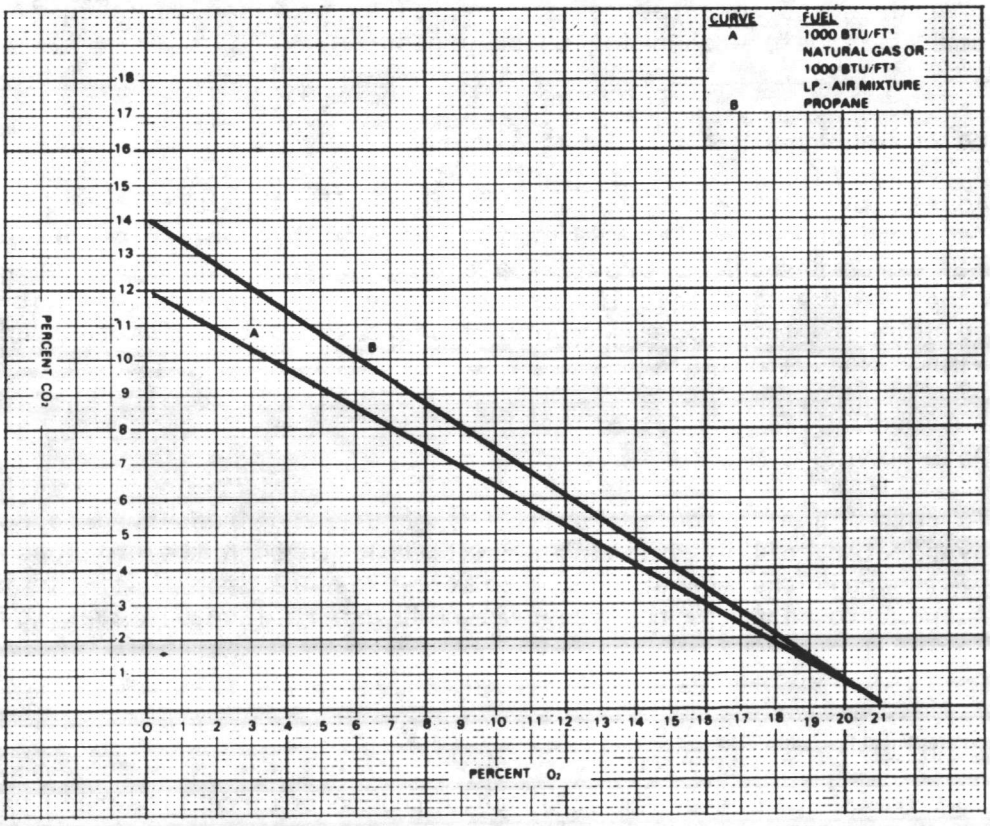

Oil Level

When the compressor is in operation, oil should be visible in the center of the oil level sight glass. In addition, the oil should be clear. Excessive foaming indicates the presence of refrigerant in the oil and will result in insufficient compressor lubrication.

If foaming is present, shut the unit off and energize the compressor crankcase heater for at least 8 hours before restarting the unit.

Liquid Line Sight Glass

After the unit has operated for a minimum of three minutes, check the liquid line sight glass(es). The flow of refrigerant past the glass should be clear and without bubbles.

If gas bubbles are present, either a restriction in the line or a shortage of refrigerant is indicated.

Operating Pressures

With the unit operating in the cooling mode, check the suction and discharge pressures and compare them to the values provided in Table 8. Allow the unit to stabilize before checking these pressures.

Balancing Supply and Exhaust Air

Adjust the supply and exhaust air fans with the inlet vanes open to provide the required operating CFM. Refer to Tables 9 through 11 for drive selections. Tables 12 through 15 provide data on fan performance. Component static pressure drop is given in Table 16. Once the variable pitch motor sheaves have been adjusted to the proper airflow, measure the pitch diameters and replace them with fixed pitch sheaves.

Determining CFM

To determine the rooftop unit CFM, obtain the pressure drop across the evaporator coil by drilling a small hole through the unit casing on each side of the coil and measuring the static pressure drop. Use this figure and Charts 1 and 2 to find the rooftop unit CFM. Use replaceable caps to plug the holes in the unit casing.

Fresh Air Dampers

The fresh air dampers must be adjusted to balance fresh air pressure against the pressure drop of the return air system. Outside air dampers are factory adjusted to deliver 100 percent outside air when the actuator is at full stroke. It is important to note that the dampers may not be fully open.

Table 8
Compressor Suction and Discharge Pressures (Saturation Temperature)

UNIT SIZE	DRY BULB ENT. EVAP.	WET BULB ENT. EVAP.	OUTDOOR AIR TEMP.	STANDARD AIR VOLUME - CFM									
				7000		7500		8000		8500		9000	
				SUCT. PRESS.	DISCH. PRESS.	SUCT. PRESS.	DISCH. PRESS.	SUCT. PRESS.	DISCH. PRESS.	SUCT. PRESS.	DISCH. PRESS.	SUCT. PRESS.	DISCH. PRESS.
(TONS)	(F)	(F)	(F)	(F)	(F)	(F)	(F)	(F)	(F)	(F)	(F)	(F)	(F)
C20	75	61	85	59.7	245.2	60.5	246.2	61.2	247.1	61.9	248.0	62.5	248.8
	80	67	85	67.2	254.9	68.1	256.0	68.8	257.0	69.5	257.9	70.1	258.7
	90	73	85	75.3	265.4	76.2	266.6	77.0	267.6	77.8	268.6	78.4	269.4
	75	61	95	62.0	276.5	62.7	277.5	63.5	278.4	64.1	279.3	64.7	280.1
	80	67	95	69.7	286.6	70.5	287.6	71.2	288.6	71.8	289.4	72.4	290.2
	90	73	95	78.0	297.5	78.8	298.6	79.6	299.6	80.3	300.5	80.9	301.4
	75	61	105	64.3	310.6	65.1	311.6	65.8	312.5	66.5	313.4	67.1	314.2
	80	67	105	72.2	321.1	72.9	322.1	73.6	323.0	74.2	323.9	74.8	324.6
	90	73	105	80.6	332.4	81.5	333.5	82.2	334.5	82.9	335.5	83.5	336.3
	75	61	115	66.8	347.7	67.6	348.7	68.3	349.7	69.0	350.7	69.7	351.6
	80	67	115	74.8	358.6	75.5	359.6	76.1	360.5	76.7	361.3	77.3	362.1
	90	73	115	83.4	370.5	84.2	371.6	85.0	372.7	85.7	373.6	86.3	374.5
				8750		9500		10000		10500		11000	
C25	75	61	85	60.4	249.4	61.3	250.6	61.9	251.4	62.4	252.1	62.9	252.8
	80	67	85	67.9	259.4	68.9	260.7	69.5	261.5	70.1	262.3	70.6	262.9
	90	73	85	76.1	270.2	77.2	271.6	77.8	272.5	78.4	273.3	78.9	274.0
	75	61	95	62.6	280.8	63.5	282.0	64.1	282.8	64.6	283.5	65.1	284.2
	80	67	95	70.3	291.2	71.3	292.5	71.8	293.3	72.4	294.0	72.9	294.7
	90	73	95	78.7	302.5	79.7	303.9	80.3	304.7	80.9	305.4	81.4	306.2
	75	61	105	64.9	315.0	65.8	316.3	66.4	317.1	66.9	317.8	67.4	318.5
	80	67	105	72.8	325.9	73.7	327.1	74.3	327.9	74.8	328.6	75.2	329.2
	90	73	105	81.3	337.6	82.3	339.0	82.9	339.8	83.5	340.5	84.0	341.3
	75	61	115	67.3	352.3	68.3	353.6	68.9	354.4	69.4	355.2	70.0	355.9
	80	67	115	75.3	363.5	76.2	364.7	76.7	365.5	77.2	366.2	77.7	366.8
	90	73	115	84.1	375.8	85.0	377.2	85.6	378.0	86.2	378.8	86.7	379.6
				10500		11250		12000		12750		13500	
C30	75	61	85	60.9	263.3	61.7	264.5	62.4	265.6	63.1	266.6	63.7	267.5
	80	67	85	68.7	275.2	69.5	276.4	70.3	277.6	71.0	278.7	71.6	279.6
	90	73	85	77.1	288.0	78.0	289.4	78.8	290.6	79.5	291.7	80.2	292.7
	75	61	95	63.2	295.4	63.9	296.5	64.6	297.7	65.3	298.8	66.0	299.8
	80	67	95	71.1	307.7	31.9	309.0	72.6	310.1	73.3	311.2	73.9	312.1
	90	73	95	79.6	321.1	80.5	322.4	81.3	323.7	82.0	324.7	82.6	325.7
	75	61	105	65.5	330.3	66.3	331.5	67.0	332.7	67.7	333.8	68.4	334.9
	80	67	105	73.6	343.2	74.4	344.4	75.0	345.5	75.7	346.5	76.2	347.4
	90	73	105	82.3	357.2	83.2	358.5	83.9	359.7	84.6	360.7	85.2	361.8
	75	61	115	68.0	368.3	68.8	369.6	69.6	370.9	70.3	372.1	71.0	373.2
	80	67	115	76.2	381.7	76.9	382.9	77.6	384.0	78.2	385.0	78.7	385.9
	90	73	115	85.1	396.5	85.9	397.9	86.6	399.1	87.3	400.3	88.0	401.4
				14000		15000		16000		17000		18000	
C40	75	61	85	59.8	249.3	60.5	250.3	61.2	251.3	61.9	252.2	62.5	253.0
	80	67	85	67.3	259.4	68.1	260.5	68.8	261.5	69.5	262.4	70.1	263.2
	90	73	85	75.4	270.2	76.3	271.4	77.1	272.5	77.8	273.5	78.4	274.3
	75	61	95	62.0	281.1	62.8	282.1	63.5	283.1	64.1	284.0	64.8	284.8
	80	67	95	69.7	291.6	70.5	292.7	71.2	293.6	71.9	294.5	72.5	295.3
	90	73	95	78.0	302.9	78.9	304.1	79.6	305.1	80.3	306.1	81.0	306.9
	75	61	105	64.4	315.6	65.1	316.7	65.9	317.7	66.5	318.6	67.2	319.5
	80	67	105	72.2	326.6	73.0	327.6	73.7	328.6	74.3	329.5	74.9	330.3
	90	73	105	80.7	338.5	81.5	339.6	82.3	340.6	83.0	341.6	83.6	342.5
	75	61	115	66.9	353.2	67.7	354.3	68.4	355.3	69.1	356.3	69.7	357.3
	80	67	115	74.8	364.5	75.6	365.6	76.2	366.5	76.8	367.4	77.4	368.2
	90	73	115	83.5	377.1	84.3	378.2	85.1	379.3	85.8	380.3	86.4	381.3

(Continued on next page)

Table 8 (Continued)

Compressor Suction and Discharge Pressures (Saturation Temperature)

UNIT SIZE (TONS)	DRY BULB ENT. EVAP. (F)	WET BULB ENT. EVAP. (F)	OUTDOOR AIR TEMP. (F)	STANDARD AIR VOLUME - CFM									
				17500		18750		20000		21250		22500	
				SUCT. PRESS. (F)	DISCH. PRESS. (F)	SUCT. PRESS. (F)	DISCH. PRESS. (F)	SUCT. PRESS. (F)	DISCH. PRESS. (F)	SUCT. PRESS. (F)	DISCH. PRESS. (F)	SUCT. PRESS. (F)	DISCH. PRESS. (F)
C50	75	61	85	59.7	253.0	60.5	254.1	61.2	255.0	61.8	256.0	62.4	256.8
	80	67	85	67.2	263.4	68.0	264.5	68.7	265.5	69.4	266.5	70.0	267.3
	90	73	85	75.3	274.6	76.1	275.8	76.9	276.9	77.6	277.9	78.3	278.8
	75	61	95	61.9	284.6	62.7	285.7	63.4	286.7	64.1	287.6	64.7	288.5
	80	67	95	69.6	295.4	70.4	296.6	71.1	297.6	71.7	298.5	72.3	299.3
	90	73	95	77.9	207.1	78.7	308.3	79.5	309.4	80.1	310.3	80.8	311.2
	75	61	105	64.3	319.0	65.1	320.2	65.8	321.2	66.4	322.1	67.1	323.0
	80	67	105	72.1	330.3	72.9	331.4	73.5	332.4	74.2	333.3	74.7	334.0
	90	73	105	80.6	342.5	81.4	343.7	82.1	344.7	82.8	345.7	83.4	346.6
	75	61	115	66.8	356.6	67.6	357.7	68.3	358.8	69.0	359.8	69.6	360.8
	80	67	115	74.7	368.2	75.4	369.3	76.1	370.2	76.7	371.1	77.2	371.9
	90	73	115	83.3	381.0	84.1	382.2	84.9	383.3	85.6	384.3	86.2	385.3
				19250		20500		22000		23000		24000	
C55	75	61	85	57.3	266.7	57.9	267.8	58.7	269.1	59.1	269.8	59.6	270.5
	80	67	85	64.4	278.5	65.2	279.7	66.0	281.0	66.5	281.8	66.9	282.6
	90	73	85	72.2	291.3	73.0	292.6	73.9	294.0	74.4	294.8	74.9	295.6
	75	61	95	59.6	299.0	60.2	300.1	61.0	301.4	61.5	302.2	61.9	302.9
	80	67	95	67.0	311.3	67.7	312.5	68.5	313.8	68.9	314.6	69.4	315.3
	90	73	95	75.0	324.6	75.7	325.9	76.6	327.3	77.1	328.1	77.5	328.9
	75	61	105	62.0	334.1	82.7	335.3	63.5	336.5	63.9	337.3	64.4	338.1
	80	67	105	69.6	347.0	70.3	348.2	71.0	349.4	71.5	350.2	71.9	350.9
	90	73	105	77.8	360.9	78.5	362.2	79.3	363.5	79.8	364.3	80.3	365.1
	75	61	115	64.6	372.4	65.3	373.6	66.1	374.9	66.6	375.7	67.0	376.5
	80	67	115	72.4	385.8	73.0	386.9	73.7	388.1	74.2	388.9	74.6	389.6
	90	73	115	80.8	400.5	81.5	401.7	82.3	403.1	82.7	404.0	83.2	404.8
				21000		22500		24000		25500		27000	
C60	75	61	85	60.3	250.7	61.1	251.8	61.8	252.8	62.5	253.7	63.1	254.5
	80	67	85	67.9	260.8	68.7	262.0	69.4	262.9	70.1	263.8	70.7	264.7
	90	73	85	76.0	271.8	76.9	272.9	77.7	274.0	78.4	274.9	79.1	275.8
	75	61	95	62.6	282.5	63.4	283.6	64.1	284.6	64.8	285.5	65.4	286.4
	80	67	95	70.3	293.1	71.1	294.2	71.8	295.1	72.4	296.0	73.0	296.8
	90	73	95	78.6	304.5	79.5	305.6	80.2	306.7	80.9	307.6	81.6	308.5
	75	61	105	65.0	317.2	65.7	318.3	66.5	319.3	67.1	320.2	67.8	321.1
	80	67	105	72.8	328.1	73.5	329.2	74.2	330.1	74.8	331.0	75.4	331.8
	90	73	105	81.3	340.0	82.1	341.2	82.9	342.3	83.6	343.2	84.3	344.2
	75	61	115	67.5	354.8	68.2	355.9	69.0	357.0	69.7	358.0	70.4	359.0
	80	67	115	75.3	366.1	76.1	367.1	76.7	368.1	77.3	369.0	77.9	369.8
	90	73	115	84.1	378.8	84.9	379.9	85.7	381.0	86.4	382.1	87.1	383.0
				20000		22000		24000		26000		28000	
C75	75	61	85	56.3	261.3	57.4	263.1	58.4	264.7	59.3	266.1	60.1	267.4
	80	67	85	63.3	272.6	64.6	274.6	65.6	276.3	66.6	277.7	67.4	279.0
	90	73	85	71.0	284.8	72.3	286.9	73.5	288.7	74.5	290.2	75.4	291.6
	75	61	95	58.3	295.0	59.4	296.9	60.4	298.5	61.3	300.0	62.1	301.3
	80	67	95	65.5	306.9	66.8	308.9	67.8	310.6	68.7	312.1	69.5	313.3
	90	73	95	73.4	319.7	74.7	321.8	75.8	323.6	76.8	325.2	77.7	326.6
	75	61	105	60.5	331.6	61.7	333.5	62.6	335.1	63.5	336.6	64.3	338.0
	80	67	105	68.0	344.1	69.2	346.0	70.2	347.7	71.0	349.2	71.8	350.5
	90	73	105	76.1	357.6	77.3	359.8	78.4	361.6	79.3	363.2	80.2	364.6
	75	61	115	63.0	371.2	64.2	373.1	65.1	374.8	66.0	376.3	66.8	377.7
	80	67	115	70.7	384.3	71.8	386.3	72.8	388.0	73.6	389.4	74.4	390.8
	90	73	115	79.0	399.0	77.3	359.8	81.2	403.1	82.0	404.8	83.0	406.3

(Continued from previous page)

Table 9
Supply Air Fan
Drive Selections

	3 HP		5 HP		7.5 HP		10 HP		15 HP		20 HP		25 HP		30 HP		40 HP	
Unit Size	Drive No.	RPM Range	Drive No.	RPM Range	Drive No.	RPM Range	Drive No.	RPM Range	Drive No.	RPM Range	Drive No.	RPM Range	Drive No.	RPM Range	Drive No.	RPM Range	Drive No.	RPM Range
C20	5	583-729	6	760-937	5	805-980	5	1020-1229	-	-	-	-	-	-	-	-	-	-
	6	736-921	7	846-1042	6	1006-1255	6	1159-1395	-	-	-	-	-	-	-	-	-	-
	-	-	-	-	7	1150-1400	-	-	-	-	-	-	-	-	-	-	-	-
C25	5	583-729	5	606-748	5	805-980	5	1020-1229	6	1144-1346	-	-	-	-	-	-	-	-
	6	736-921	6	760-937	6	1006-1255	6	1159-1395	7	1346-1582	-	-	-	-	-	-	-	-
	-	-	7	846-1042	7	1150-1400	-	-	-	-	-	-	-	-	-	-	-	-
C30	-	-	4	606-748	5	670-816	5	824-992	5	759-1129	7	1129-1326	-	-	-	-	-	-
	-	-	5	760-937	6	805-980	6	1020-1229	6	1044-1228	-	-	-	-	-	-	-	-
C40	-	-	-	-	3	557-670	4	705-861	4	772-909	4	896-1094	4	896-1094	-	-	-	-
	-	-	-	-	4	705-851	5	824-992	5	888-1044	-	-	5	1006-1199	-	-	-	-
C50/	-	-	-	-	3	557-670	3	556-670	3	646-760	3	787-984	4	896-1054	4	896-1094	-	-
C55	-	-	-	-	4	705-670	4	705-861	4	772-909	4	896-1094	-	-	5	1006-1199	-	-
C60	-	-	-	-	-	-	4	556-670	3	595-700	4	700-875	4	700-875	4	805-962	6	972-1050
	-	-	-	-	-	-	5	691-832	4	630-788	5	788-985	5	788-985	-	-	-	-
	-	-	-	-	-	-	-	-	5	772-909	-	-	-	-	-	-	-	-
C75	-	-	-	-	-	-	4	556-670	3	595-700	4	700-875	4	700-875	4	805-962	6	972-1050
	-	-	-	-	-	-	5	691-832	4	630-788	5	788-985	5	788-985	5	894-1070	-	-
	-	-	-	-	-	-	-	-	5	772-909	-	-	-	-	-	-	-	-

Table 10
Exhaust Air Fan Drive
Selections (50% Exhaust)

	1½ HP		3 HP		5 HP		7½ HP	
UNIT SIZE	RPM RANGE	DR NO	RPM RANGE	DR NO	RPM RANGE	DR NO	RPM RANGE	DR NO
C20 Ton	495-641 626-810	5 6	736-921	6				
C25 Ton	495-641 626-810	5 6	736-921	6				
C30 Ton			583-736 736-921	5 6	846-1042	7		
C40 Ton					488-602 602-748	3 4	670-816	5
C50 and C55 Ton					602-748	4	670-816	5
C60 and C75 Ton					488-602	6	619-753	7

Table 11
Exhaust Air Fan
Drive Selections (100% Exhaust)

Unit Size	1.5 HP		3 HP		5 HP		7.5 HP		10 HP		15 HP		20 HP	
	Drive No.	RPM Range	Drive No.	RPM Range	Drive No.	RPM Range	Drive No.	RPM Range	Drive No.	RPM Range	Drive No.	RPM Range	Drive No.	RPM Range
C20	5	495-641	5	583-729	-	-	-	-	-	-	-	-	-	-
	-	-	6	736-921	-	-	-	-	-	-	-	-	-	-
C25	-	-	5	583-729	6	760-987	-	-	-	-	-	-	-	-
	-	-	6	736-921	7	846-1042	-	-	-	-	-	-	-	-
C30	-	-	5	583-729	6	760-987	5	805-980	-	-	-	-	-	-
	-	-	6	736-921	7	846-1042	6	1006-1225	-	-	-	-	-	-
C40	-	-	-	-	3	488-602	3	556-670	4	691-832	-	-	-	-
	-	-	-	-	4	606-748	5	670-816	5	824-992	-	-	-	-
C50	-	-	-	-	3	488-602	3	556-670	3	556-670	3	772-909	-	-
	-	-	-	-	4	606-748	5	670-816	4	691-832	-	-	-	-
C55	-	-	-	-	3	488-602	3	556-670	3	556-670	3	772-909	-	-
	-	-	-	-	4	606-748	5	670-816	4	691-832	-	-	-	-
C50/ C75	-	-	-	-	6	488-602	2	466-561	3	556-670	3	646-760	3	787-984
	-	-	-	-	-	-	3	557-670						

Table 12
Exhaust Fan Performance (50% Exhaust)

UNIT SIZE	CFM STD. AIR	NEGATIVE STATIC PRESSURE													
		0.200		0.400		0.600		0.800		1.000		1.200		1.400	
		RPM	BHP	RPM	BHP	RPM	BHP	RPM	BHP	RPM	BHP	RPM	BHP	RPM	BHP
C20 And C25	2000.	364	0.17	487	0.30	582	0.45	658	0.58	731	0.73	797	0.90	856	1.08
	3000.	435	0.36	522	0.51	614	0.67	694	0.88	765	1.11	830	1.34	886	1.54
	4000.	529	0.76	592	0.86	654	1.03	728	1.29	797	1.51	861	1.77	919	2.05
	5000.	623	1.32	687	1.56	735	1.67	778	1.79	836	2.13	896	2.45	953	2.72
	6000.	722	2.13	779	2.47	830	2.72	890	2.86	905	2.96				
C30	2000.	364	0.17	487	0.30	582	0.45	658	0.58	731	0.73	797	0.90	856	1.08
	3000.	435	0.36	522	0.51	614	0.67	694	0.88	765	1.11	830	1.34	886	1.54
	4000.	529	0.76	592	0.86	654	1.03	728	1.29	797	1.51	861	1.77	919	2.05
	5000.	623	1.32	687	1.56	735	1.67	778	1.79	836	2.13	896	2.45	953	2.72
	6000.	722	2.13	779	2.47	830	2.72	870	2.86	905	2.96	944	3.16	994	3.59
	7000.	824	3.23	874	3.64	922	4.02	965	4.30	1000	4.48	1032	4.59	1062	4.72
C40	3000.	288	0.22	393	0.38	477	0.55	547	0.74	611	0.94	668	1.16	721	1.39
	5000.	372	0.66	430	0.83	495	1.05	557	1.29	621	1.57	680	1.87	732	2.16
	7000.	472	1.55	522	1.82	563	2.04	606	2.29	653	2.59	698	2.91	742	3.24
	9000.	578	3.06	621	3.41	661	3.76	695	4.06	725	4.34	758	4.65	794	5.01
	11000.	688	5.36	725	5.80	760	6.24	793	6.66	823	7.06	850	7.42	875	7.76
C50 and C55	3000.	288	0.22	393	0.38	477	0.55	547	0.74	611	0.94	668	1.16	721	1.39
	5000.	372	0.66	430	0.83	495	1.05	557	1.29	621	1.57	680	1.87	732	2.16
	7000.	472	1.55	522	1.82	563	2.04	606	2.29	653	2.59	698	2.91	742	3.24
	9000.	578	3.06	621	3.41	661	3.76	695	4.06	725	4.34	758	4.65	794	5.01
	11000.	688	5.36	725	5.80	760	6.24	793	6.66	823	7.06	850	7.42	875	7.76
C60 and C75	4000.	271	0.29	364	0.54	438	0.82	499	1.07	550	1.30	601	1.56	651	1.87
	6000.	339	0.71	391	0.90	456	1.22	517	1.60	572	2.01	622	2.43	668	2.85
	8000.	425	1.55	460	1.73	497	1.96	542	2.30	591	2.72	639	3.20	684	3.73
	10000.	517	2.88	543	3.13	571	3.34	600	3.59	632	3.94	668	4.37	707	4.87
	12000.	612	4.84	633	5.15	655	5.43	678	5.68	702	5.95	726	6.29	752	6.91
	13000.	659	6.09	679	6.44	699	6.76	720	7.04	741	7.31				

NOTES:

1. Shaded areas indicate non-standard drive selections. These drive selections must be manually factory selected.

Table 13
Exhaust Fan Performance
(100% Exhaust)

UNIT	CFM	NEGATIVE STATIC PRESSURE															
NOMINAL	STD.	0.250		0.500		0.750		1.000		1.250		1.500		1.750		2.000	
TONS	AIR	RPM	BHP	RPM	BHP	RPM	BHP	RPM	BHP	RPM	BHP	RPM	BHP	RPM	BHP	RPM	BHP
	4000.	399	0.38	538	0.75	640	1.08	730	1.45	811	1.87	882	2.34	947	2.88		
	6000.	453	0.74	570	1.17	675	1.65	765	2.22	845	2.78						
C20	8000.	547	1.59	619	1.81	711	2.48	797	3.01								
	10000.	640	2.79														
	12000.																
	14000.																
	4000.	399	0.38	538	0.75	640	1.08	730	1.45	811	1.87	882	2.34	947	2.88	1017	3.55
	6000.	453	0.74	570	1.17	675	1.65	765	2.22	845	2.78	912	3.27	975	3.77	1036	4.30
C25	8000.	547	1.59	619	1.81	711	2.48	797	3.01	876	3.66	947	4.40				
	10000.	640	2.79	712	3.25	767	3.48	837	4.26	911	5.04						
	12000.	737	4.44														
	14000.																
	4000.	399	0.38	538	0.75	640	1.08	730	1.45	811	1.87	882	2.34	947	2.88	1017	3.55
	6000.	453	0.74	570	1.17	675	1.65	765	2.22	845	2.78	912	3.27	975	3.77	1036	4.30
C30	8000.	547	1.59	619	1.81	711	2.48	797	3.01	876	3.66	947	4.40	1013	5.18	1075	5.94
	10000.	640	2.79	712	3.25	767	3.48	837	4.26	911	5.04	980	5.70	1045	6.46	1106	7.31
	12000.	737	4.44	806	5.22	860	5.64	905	5.89	956	6.49						
	14000.	837	6.67														
	7500.	334	0.75	438	1.21	535	1.77	616	2.35	686	2.98	750	3.64	809	4.34	864	5.06
	9000.	362	1.09	449	1.57	536	2.16	618	2.84	689	3.52	753	4.24	812	4.99	867	5.77
C40	12000.	435	2.19	496	2.70	563	3.35	628	4.04	693	4.83	757	5.71	817	6.63	873	8.53
	14000.	486	3.22	542	3.86	594	4.47	653	5.25	707	6.04	763	6.91	819	7.86	874	8.89
	16000.	537	4.55	592	5.35	636	6.00	683	6.74	735	7.64	783	8.53	831	9.47	880	10.48
	9000.	362	1.09	449	1.57	536	2.16	618	2.84	689	3.52	753	4.24	812	4.99	867	5.77
	12000.	435	2.19	496	2.70	563	3.35	628	4.04	693	4.83	757	5.71	817	6.63	873	7.53
C50	15000.	511	3.85	567	4.56	614	5.18	667	5.96	720	6.80	771	7.66	824	8.60	876	9.63
	18000.	590	6.21	642	7.16	685	7.97	724	8.69	766	9.54	812	10.54	856	11.55	898	12.56
	20000.	644	8.26	692	9.35	735	10.33	772	11.17	807	11.97	844	12.91	885	14.00	926	15.13
	10000.	386	1.40	463	1.90	540	2.48	618	3.18	691	3.94	755	4.70	814	5.48	869	6.30
	13000.	461	2.67	518	3.23	578	3.88	639	4.61	698	5.39	759	6.26	818	8.22	874	8.21
C55	16000.	537	4.55	592	5.35	636	6.00	683	6.74	735	7.64	783	8.53	831	9.47	880	10.48
	19000.	617	7.19	667	8.21	710	9.10	747	9.87	785	10.68	827	11.66	870	12.73	911	13.80
	21500.	685	10.08	731	11.26	772	12.36	809	13.33	842	14.20	874	15.08	910	16.10	948	17.28
	12000.	351	1.49	423	2.09	502	3.00	572	4.02	634	5.07	690	6.09	740	7.04	784	7.91
C60	15000.	412	2.68	460	3.15	521	3.96	585	5.02	646	6.24	702	7.53	754	8.83	801	10.14
and	18000.	488	4.50	516	4.88	557	5.54	607	6.49	662	7.66	715	9.01	766	10.48	814	12.01
C75	21000.	547	6.75	578	7.36	612	7.92	647	8.71	688	9.77	735	11.03	781	12.46	827	14.03
	24000.	617	9.83	644	10.59	672	11.22	702	11.88	732	12.77	766	13.89	805	15.22		

NOTES:
1. Shaded areas indicate non-standard drive selections; these drive selections must be manually factory selected.

Table 14
Supply Air Fan Performance
(20 through 60 Ton Units)

	CFM STD AIR	TOTAL STATIC PRESSURE — IN. WG																													
		0.250		0.500		0.750		1.000		1.250		1.500		1.750		2.000		2.250		2.500		2.750		3.000		3.250		3.500		3.750		4.000	
		RPM	BHP	RPM	BHP	RPM	BHP	RPM	BHP	RPM	BHP	RPM	BHP	RPM	BHP	RPM	BHP	RPM	BHP	RPM	BHP	RPM	BHP	RPM	BHP	RPM	BHP	RPM	BHP	RPM	BHP
20	4000	416	0.42	545	0.74	654	1.12	744	1.55	819	1.97	890	2.45	956	2.96	1017	3.48	1070	3.98	1117	4.46	1158	4.92	1197	5.37	1235	5.84	1274	6.35	1313	6.90	1353	7.49
	5000	464	0.63	570	0.98	669	1.38	760	1.84	842	2.35	914	2.88	976	3.41	1034	3.96	1091	4.55	1146	5.17	1198	5.81	1248	6.46	1293	7.11	1336	7.74	1374	8.35	1409	8.93
	6000	496	0.91	603	1.31	694	1.74	777	2.21	856	2.74	929	3.32	997	3.94	1060	4.57	1116	5.20	1167	5.83	1216	6.48	1264	7.17	1311	7.88	1357	8.62	1402	9.39	1445	10.16
	7000	544	1.29	639	1.74	726	2.21	804	2.71	876	3.25	945	3.84	1011	4.48	1073	5.16	1133	5.87	1190	6.60	1242	7.34	1291	8.07	1336	8.81	1378	9.55	1420	10.31	1461	11.10
	8000	593	1.76	680	2.27	761	2.80	836	3.35	904	3.92	968	4.51	1030	5.16	1090	5.85	1147	6.58	1202	7.34	1256	8.14	1307	8.96	1357	9.79	1403	10.64	1447	11.48	1488	12.33
	9000	645	2.35	726	2.93	800	3.51	870	4.11	936	4.72	998	5.36	1056	6.02	1112	6.71	1166	7.45	1219	8.23	1271	9.04	1321	9.88	1369	10.75	1417	11.65	1462	12.58	1507	13.51
25	5000	434	0.58	554	0.93	655	1.31	745	1.75	830	2.25	908	2.79	977	3.35	1036	3.89	1085	4.40	1131	4.91	1176	5.47	1223	6.09	1270	6.76	1319	7.49	1368	8.28	1418	9.14
	6000	471	0.83	582	1.24	676	1.65	760	2.11	839	2.61	911	3.16	982	3.75	1049	4.40	1112	5.06	1168	5.73	1219	6.38	1264	7.01	1304	7.62	1342	8.24	1379	8.88	1418	9.57
	7000	515	1.17	611	1.60	703	2.09	782	2.58	856	3.10	925	3.66	991	4.26	1053	4.90	1114	5.58	1173	6.31	1230	7.06	1284	7.84	1334	8.62	1381	9.39	1423	10.15	1462	10.89
	8000	562	1.60	647	2.07	731	2.61	809	3.17	879	3.72	944	4.30	1007	4.92	1067	5.57	1125	6.26	1179	6.97	1233	7.73	1286	8.53	1338	9.36	1388	10.22	1436	11.10	1482	11.99
	9000	609	2.13	688	2.65	753	3.22	837	3.84	906	4.47	969	5.10	1028	5.73	1085	6.40	1141	7.10	1194	7.84	1246	8.60	1295	9.39	1343	10.21	1391	11.07	1438	11.97	1484	12.89
	10000	658	2.77	733	3.37	800	3.96	868	4.61	934	5.31	997	6.01	1055	6.71	1109	7.40	1161	8.12	1212	8.87	1262	9.65	1310	10.47	1357	11.30	1403	12.16	1447	13.05	1490	13.96
	11000	708	3.54	780	4.21	842	4.85	902	5.52	964	6.26	1025	7.03	1082	7.80	1136	8.57	1186	9.33	1235	10.10	1282	10.89	1329	11.72	1374	12.58	1419	13.46	1462	14.37		
30	6000	360	0.62	468	1.05	565	1.59	649	2.19	720	2.79	775	3.33	823	3.86	869	4.44	915	5.05	959	5.69	1000	6.35	1039	7.03	1076	7.71	1111	8.41	1144	9.11	1176	9.84
	7000	384	0.83	481	1.28	570	1.82	653	2.46	727	3.15	793	3.86	850	4.55	897	5.19	938	5.80	979	6.44	1019	7.12	1058	7.83	1096	8.57	1132	9.33	1168	10.10	1201	10.89
	8000	412	1.09	499	1.57	581	2.13	658	2.78	731	3.50	797	4.27	859	5.08	915	5.90	965	6.68	1007	7.42	1045	8.13	1081	8.83	1117	9.57	1152	10.33	1186	11.13	1220	11.96
	9000	442	1.43	521	1.94	596	2.52	667	3.17	736	3.90	801	4.70	863	5.56	920	6.45	974	7.36	1024	8.28	1069	9.17	1109	10.03	1145	10.84	1179	11.63	1210	12.42	1242	13.24
	10000	474	1.83	546	2.38	615	2.99	681	3.66	745	4.40	807	5.21	867	6.08	924	7.01	977	7.97	1028	8.97	1077	9.99	1123	11.01	1165	12.01	1203	12.99	1239	13.92	1271	14.83
	11000	507	2.32	573	2.90	637	3.54	699	4.24	769	4.99	817	5.81	874	6.69	928	7.63	981	8.62	1032	9.66	1080	10.73	1127	11.82	1171	12.94	1214	14.07	1254	15.18	1291	16.28
	12000	541	2.89	603	3.51	662	4.18	720	4.91	776	5.69	830	6.52	884	7.41	936	8.36	987	9.36	1036	10.42	1084	11.52	1130	12.65	1175	13.82	1217	15.01	1259	16.22	1299	17.45
	13000	575	3.55	634	4.23	689	4.93	743	5.69	796	6.49	847	7.34	898	8.25	947	9.20	996	10.22	1043	11.28	1089	12.39	1135	13.55	1179	14.75	1221	15.98	1262	17.24	1302	18.52
	13500	593	3.94	650	4.64	703	5.45	756	6.13	807	6.95	857	7.82	906	8.73	954	9.69	1002	10.71	1048	11.78	1093	12.89	1138	14.06	1181	15.26	1223	16.51	1264	17.74	1304	19.02
40	8000	327	0.85	427	1.50	507	2.21	578	2.99	638	3.76	692	4.57	742	5.41	789	6.29	833	7.21	875	8.18	914	9.18	950	10.20	982	11.21	1012	12.21	1040	13.21	1067	14.23
	9000	340	1.02	437	1.74	515	2.50	584	3.32	647	4.20	701	5.07	750	5.95	797	6.88	841	7.84	883	8.83	922	9.85	961	10.93	997	12.03	1031	13.16	1063	14.30	1093	15.44
	10000	353	1.21	448	2.00	525	2.82	591	3.68	653	4.62	709	5.59	760	6.56	805	7.52	849	8.53	891	9.57	930	10.63	968	11.72	1004	12.84	1040	14.01	1073	15.21	1106	16.44
	11000	369	1.45	459	2.29	535	3.18	601	4.10	659	5.06	716	6.09	768	7.16	815	8.22	858	9.28	899	10.36	938	11.47	976	12.62	1012	13.78	1047	14.97	1081	16.19	1114	17.43
	12000	387	1.74	471	2.62	545	3.56	611	4.56	668	5.56	722	6.62	774	7.74	822	8.90	867	10.07	908	11.23	947	12.39	984	13.57	1020	14.78	1055	16.02	1089	17.29	1122	18.5
	13000	408	2.10	484	2.97	557	3.99	621	5.04	679	6.12	731	7.22	780	8.37	828	9.58	874	10.83	916	12.09	956	13.35	994	14.61	1029	15.86	1063	17.14	1097	18.45	1129	19.79
	14000	430	2.51	497	3.36	569	4.46	631	5.56	689	6.71	741	7.88	789	9.07	835	10.30	880	11.59	923	12.93	964	14.29	1002	15.65	1039	17.01	1073	18.36	1106	19.71	1138	21.08
	15000	454	3.00	512	3.81	581	4.96	643	6.14	699	7.34	751	8.58	799	9.84	844	11.10	887	12.42	929	13.79	969	15.21	1009	16.65	1046	18.11	1082	19.57	1115	21.03	1147	22.47
	16000	478	3.55	530	4.33	594	5.49	655	6.75	710	8.01	761	9.31	809	10.64	854	11.98	896	13.33	936	14.73	976	16.17	1015	17.67	1052	19.20	1088	20.75	1123	22.31	1156	23.87
	17000	502	4.18	549	4.93	607	6.08	667	7.41	722	8.75	772	10.10	819	11.49	864	12.90	906	14.33	946	15.76	984	17.23	1021	18.75	1058	20.32	1094	21.93	1129	23.56		
	18000	527	4.88	569	5.63	622	6.72	680	8.11	734	9.53	783	10.94	830	12.38	874	13.86	916	15.36	956	16.87	993	18.39	1030	19.93	1065	21.52	1101	23.16	1135	24.84		
50	10000	342	1.19	443	1.98	514	2.70	577	3.45	635	4.24	689	5.09	742	6.02	794	7.03	842	8.09	887	9.18	927	10.28	965	11.37	1000	12.47	1034	13.59	1067	14.74	1099	15.90
	12000	375	1.71	460	2.56	539	3.53	600	4.39	654	5.26	705	6.18	753	7.13	798	8.11	843	9.17	887	10.31	931	11.50	972	12.75	1012	14.03	1050	15.34	1085	16.65	1118	17.96
	14000	415	2.44	482	3.29	557	4.39	624	5.51	678	6.53	726	7.52	771	8.55	815	9.62	857	10.72	897	11.85	936	13.01	974	14.25	1012	15.54	1050	16.90	1087	18.31	1123	19.76
	16000	458	3.40	513	4.26	576	5.37	642	6.65	702	7.94	752	9.14	795	10.27	836	11.41	876	12.59	914	13.81	952	15.05	988	16.31	1023	17.60	1057	18.93	1091	20.30	1124	21.74
	18000	503	4.62	551	5.50	603	6.61	660	7.92	719	9.38	773	10.84	821	12.23	862	13.54	900	14.80	936	16.08	972	17.40	1006	18.76	1040	20.14	1073	21.54	1105	22.96	1137	24.40
	20000	550	6.14	591	7.05	636	8.16	685	9.47	737	10.96	790	12.58	840	14.21	885	15.80	926	17.31	962	18.75	996	20.14	1029	21.56	1061	23.01	1093	24.50	1124	26.01	1154	27.54
	22000	597	7.97	634	8.93	673	10.05	715	11.36	761	12.86	808	14.50	856	16.27	903	18.07	946	19.85	986	21.57	1022	23.22	1055	24.79	1086	26.33	1116	27.88	1146	29.46		
	22500	609	8.52	645	9.49	703	10.61	724	11.93	768	13.43	814	15.07	861	16.85	907	18.67	950	20.50	991	22.28	1027	23.97	1061	25.64	1093	27.24	1123	28.84				
55	10000	342	1.19	443	1.98	514	2.70	577	3.45	635	4.24	689	5.09	742	6.02	794	7.03	842	8.09	887	9.18	927	10.28	965	11.37	1000	12.47	1034	13.59	1067	14.74	1099	15.90
	12000	375	1.71	460	2.56	539	3.53	600	4.39	654	5.26	705	6.18	753	7.13	798	8.11	843	9.17	887	10.31	931	11.50	972	12.75	1012	14.03	1050	15.34	1085	16.65	1118	17.96
	14000	415	2.44	482	3.29	557	4.39	624	5.51	678	6.53	726	7.52	771	8.55	815	9.62	857	10.72	897	11.85	936	13.01	974	14.25	1012	15.54	1050	16.90	1087	18.31	1123	19.76
	16000	458	3.40	513	4.26	576	5.37	642	6.65	702	7.94	752	9.14	795	10.27	836	11.41	876	12.59	914	13.81	952	15.05	988	16.31	1023	17.60	1057	18.93	1091	20.30	1124	21.74
	18000	503	4.62	551	5.50	603	6.61	660	7.92	719	9.38	773	10.84	821	12.23	862	13.54	900	14.80	936	16.08	972	17.40	1006	18.76	1040	20.14	1073	21.54	1105	22.96	1137	24.40
	20000	550	6.14	591	7.05	636	8.16	685	9.47	737	10.96	790	12.58	840	14.21	885	15.80	926	17.31	962	18.75	996	20.14	1029	21.56	1061	23.01	1093	24.50	1124	26.01	1154	27.54
	22000	597	7.97	634	8.93	673	10.05	715	11.36	761	12.86	808	14.50	856	16.27	903	18.07	946	19.85	986	21.57	1022	23.22	1055	24.79	1086	26.33	1116	27.88	1146	29.46		
	22500	609	8.52	645	9.49	683	10.61	724	11.93	768	13.43	814	15.07	861	16.85	907	18.67	950	20.50	991	22.28	1027	23.97	1061	25.64	1093	27.24	1123	28.84				
	24000	645	10.15	679	11.18	714	12.32	751	13.63	790	15.12	832	16.77	875	18.57	920	20.47	963	22.44	1004	24.40												
60	14000	346	2.05	422	2.99	495	4.11	555	5.31	604	6.58	648	7.86	689	9.11	727	10.37	762	11.68	795	12.99	826	14.31	855	15.63	882	16.97	909	18.36	935	19.79	960	21.25
	16000	376	2.79	441	3.74	508	4.96	570	6.24	623	7.61	668	9.05	709	10.51	747	11.96	782	13.39	816	14.83	848	16.30	878	17.79	907	19.30	934	20.80	960	22.31	985	23.82
	18000	408	3.71	464	4.72	524	5.92	583	7.35	638	8.80	687	10.32	729	11.92	766	13.55	802	15.20	836	16.83	868	18.44	898	20.04	928	21.67	956	23.33	983	25.01	1009	26.70
	20000	441	4.84	492	5.92	544	7.13	598	8.58	651	10.18	701	11.79	746	13.45	786	15.19	822	16.99	856	18.81	888	20.64	919	22.46	948	24.25	976	26.03	1003	27.82	1030	29.64
	22000	474	6.20	522	7.37	568	8.62	617	10.04	666	11.70	714	13.46	760	15.22	802	17.02	841	18.90	875	20.85	908	22.83	938	24.84	968	26.85	996	28.85	1023	30.84	1050	32.81
	24000	508	7.81	554	9.08	595	10.39	639	11.83	684	13.44	729	15.28	773	17.21	815	19.13	855	21.06	893	23.07	927	25.15	958	27.28	988	29.45	1016	31.63	1043	33.82		
	26000	542	9.69	586	11.06	625	12.46	664	13.93	704	15.54	746	17.34	788	19.34	828	21.43	868	23.51	906	25.59	942	27.72	975	29.91	1007	32.18	1036	34.49				
	27000	560	10.78	602	12.20	641	13.65	678	15.15	716	16.78	756	18.56	797	20.54	836	22.66	875	24.83	913	26.99	949	29.17	982	31.38	1015	33.68	1045	36.03				

NOTES:

1. Shaded areas indicate non-standard drive selection.

2. Be sure all valves are in the operating position if the unit will be operating immediately.

3. Secure all exterior panels and condenser grilles in place.

Important

The Electronic Night Setback Module generates and uses radio frequency energy. If not installed and used properly, in accordance with the manufacturers instructions, the device may cause interference to radio and television reception. It has been tested and found to comply with the limits for a Class B computing device in accordance with the specifications in Subpart J of Part 15 of the FCC rules, which are designed to provide reasonable protection against such interference in a residential installation. However, there is no guarantee that interference will not occur in a particular installation. If this equipment causes interference to radio or television reception, determined by turning the module on and off, the user is encouraged to correct the interference by one or more of the following measures:

Reorient the receiving antenna.

Relocate the night setback module with respect to the receiver.

Move the night setback module away from the receiver.

Plug the receiver into a different outlet so that module and receiver are on different branch circuits.

The Trane Company is confident that if installed and used properly, interference will not be a problem. If necessary, the user should consult The Trane Company or an experienced radio/television technician for additional suggestions.

The following booklet has been prepared by the Federal Communications Commission: "How To Identify and Resolve Radio-TV Interference Problems"

This booklet is available from the US Government Printing Office, Washington, DC, 20402, Stock #004-000-00345-4.

Installation Checklist

Complete this checklist as the unit is installed to verify that all recommended installation procedures are accomplished before the unit is started. This checklist does not replace the detailed instructions provided in the INSTALLATION section of this manual.

Receiving

[] Unit inspected for shipping damage.
[] Unit checked for missing material.

Unit Location

[] Unit secured in correct location.
[] Unit set level.
[] Condenser air clearances adequate.
[] Service clearances around unit sufficient.

Foundation

[] Seal between unit and roof curb is tight and without buckles or cracks.
[] Ductwork is securely connected to unit roof curb.

Unit Overview

[] Hinged panel doors open and close, and gasketing is intact.
[] Belt tension on fans is correct and fan wheels rotate freely.
[] Shipping channels removed from supply and return fans (when applicable).
[] Filters are correctly positioned, and are of the proper type, size and number.
[] Thermal expansion valve distributor tubes in correct configuration, and are not kinked or crimped.
[] Mixed air damper assembly functions correctly.
[] Economizer assembly operates properly.
[] Condenser fans are correctly positioned, properly connected and rotate freely.
[] Compressor and motor protection wiring is correct and tight.
[] Shipping spacer angles removed from feet of Model R compressors (75 ton units only).

Refrigerant Piping

[] All piping is free of cracks, crimps or bends.
[] Evaporator and condenser coils are in good condition.

Heating Coils and Piping (SLHC and SSHC)

[] Modulating valve is properly installed and sheltered from moisture.
[] All coil piping is correctly installed and supported independently of the coil.
[] Swing joints or flexible fittings are provided in all coil piping connections to absorb strains of expansion and contraction.
[] Steam heating units (SSHC) installed perfectly level to insure proper condensate removal.

[] Swing-check vacuum breakers installed in unused condensate return tappings, and vacuum breaker line properly vented (SSHC only).
[] Steam trap discharge installed approximately 12 inches below condensate return tapping (SSHC only).
[] Float and thermostatic traps are properly located and installed if system contains an atmospheric pressure/gravity return, or if the possibility of low pressure supply steam exists (SSHC only).
[] Steam main drained into return line using steam trap located ahead of control valve (SSHC only).
[] All return lines and fittings are equal to full size of return opening (SSHC only).
[] Automatic air vent installed in top pipe plug tapping of return header (SLHC only).
[] Hot water coil properly vented between return header and return piping (SLHC only).
[] Return piping sized to provide sufficient water velocities (SLHC only).

Electrical Wiring

[] Main power terminal block or main disconnect of unit has correct voltage.
[] Wires are routed in agreement with unit wiring diagram shipped with unit.
[] Controls are securely fastened to control panel(s).
[] Correct fuses are installed.
[] All wiring connections are tight.
[] Unit nonfused disconnect switch is installed.
[] Supply power wiring is run to unit control panel.
[] Supply power to unit matches nameplate specifications.
[] Disconnect switch installed and supply power wiring is complete to electric heat section (SEHC only).

Options

[] Continuity of electric heat modules tested (SEHC only).
[] Flue correctly installed (SBHC, SFHC only).
[] Wiring to remote panel correctly installed.
[] Economizer dampers and linkage components move freely.
[] Discharge air controller checked for proper operation and correctly adjusted.
[] Electronic night setback panel installed and programmed correctly.

General

The unit operation description that follows is for Models SBHC, SEHC, SFHC, SLHC and SSHC units. For Model SAHC and SXHC units, disregard any reference to heating.

The cooling cycles of these units are controlled by the discharge air controller and the discharge air sensor. The heating cycles are controlled by the night setback thermostat.

The 20, 25 and 30 ton units are provided with a single refrigerant circuit, while the 40, 50, 55, 60 and 75 ton units are equipped with dual refrigerant circuits. Each circuit is complete with its own compressor, evaporator coil and condenser coil.

These units are provided with inlet vane assemblies mounted on the supply fan inlet, and are used to regulate supply air requirements. The inlet vanes are used to regulate supply air fan capacity, and to limit horsepower at lower system air requirements. When in any position other than full open, the inlet vanes will pre-spin the air in the same direction as the rotation of the supply fan. As the inlet vane position approaches full closed, the amount of air spin induced by the vanes increases. Both airflow to the fan and fan horsepower decrease as the inlet vanes modulate toward full closed.

Two pressure switches in the unit control panel monitor duct static pressure and enable the inlet vane actuator to appropriately modulate the position of the vanes.

Unit Operation in the Cooling Mode

A supply air temperature sensor (located in the discharge airstream) and the discharge air controller sample the discharge air temperature by pulsing a DC current across the supply air temperature sensor every 4 to 5 seconds. The voltage potential across the thermistor is used to provide a discharge air temperature reading to the discharge air controller. This reading is used to modulate the economizer and to sequence stages of mechanical cooling in response to the discharge air temperature deviation from setpoint.

During operation, the discharge air controller attempts to maintain the discharge air temperature within the control band by first modulating the outdoor air economizer. The economizer is permitted to function freely only when its enthalpy sensor indicates suitable outdoor air conditions exist. However, if the conditions are not suitable, the outdoor air damper is opened to the degree established by a minimum position potentiometer.

To take full advantage of free cooling, the controller is programmed to establish an economizer control point that is below the controller setpoint temperature. This offset is equal to one-half the control band adjustment. For example, if the control band adjustment is 8 F and the setpoint is 55 F, the economizer control point is:

$$55\text{ F Setpoint} - \frac{8\text{ F Control Band}}{2} = 51\text{ F}$$

When conditions make it possible to achieve the reduced discharge air control point temperature, the system is able to balance the load with a lesser air volume. Reduced air volume results in a lower fan brake horsepower requirement.

When the economizer can no longer handle the load, the discharge air temperature floats to the upper limit of the control band (see Point 1 in Figure 48). At this point, the first stage of cooling is energized for a minimum of four minutes. This draws the discharge air temperature back within the control band.

Assuming that the cooling load has increased beyond the capacity produced by the first stage, the discharge air temperature continues to rise until it reaches a temperature 1 F beyond the control band limit (2). At this point, the first stage is locked on and the second stage is cycled on, returning the discharge air temperature to the control band.

This procedure is repeated through the mechanical cooling, with the highest number stage being the cycled stage.

As the discharge air temperature floats within the control band, any deviation from setpoint is integrated over time and may cause the cycled stage to be energized or de-energized in an attempt to reduce the offset to a value approaching zero (3).

Finally, when a reduced load causes the discharge air temperature to fall 1 F below the control band (4), the cycled stage is locked off and the next lower capacity stage is removed from constant operation and becomes the cycled stage. It is important to note that outdoor air will be brought in through the economizer during this entire control sequence if outdoor air conditions are acceptable.

Throughout the control sequence, the controller reduces the time lapse between successive corrective actions as the temperature moves farther away from setpoint, thereby promoting control stability.

Figure 48
Discharge Air Temperature
Control Operation

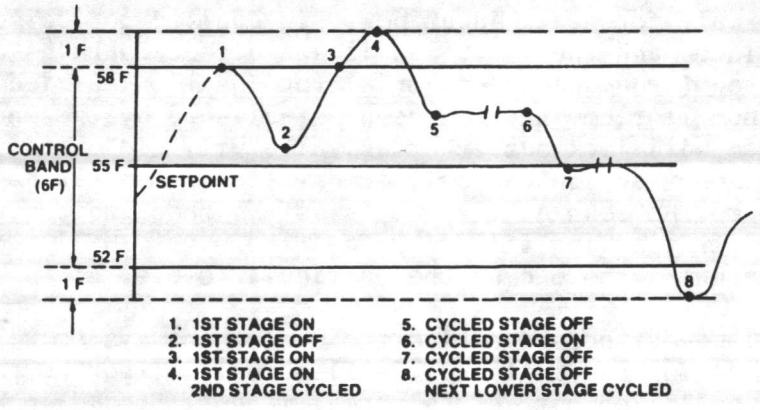

System Optimization (Option)

The optional System Optimization interface is a series of five 24 VAC relays, designed to operate in conjunction with a Tracer Energy Management System or other compatible energy management system. Providing 24 VAC power to each of the respective system optimization "points" will energize the respective system optimization relays as shown in Figure 27. The functions of the system optimization relays are as follows:

2K51 - When energized, this relay shuts down all unit functions. It also cycles the unit while it is in night setback/morning warm-up, provided that relay 2K52 is energized.

2K52 - When energized, this relay enables night setback/morning warm-up.

2K53 - When energized, this relay closes the outside air dampers unless the outside air is suitable for cooling.

2K54 - When energized, this relay unloads the highest stage of compressor and electric heat (if provided) operation.

2K55 - When energized, this relay shuts off the compressor and electric heat (if provided).

Gas Heating Functions (SBHC and SFHC)

With the supply air fan operating and the zone thermostat calling for heating, the first stage heating relay (1K21) is energized. The combustion blower proving switch (4S25) and high limit switch (4S26) must be closed before the ignition-combustion control circuit is energized. Second stage heating is controlled by contacts (H2) in the Master Energy Control. A service switch (4S24) is provided for de-energizing the heating controls. The system is wired so that heating and cooling cannot occur simultaneously.

Fenwal Ignition System

Normal Operation

On a call for heat, input power is applied to the control board, sparking is initiated and the gas valve is energized. Sparking continues with the gas valve powered for a specified "trial for ignition" period as determined by electronic timing. If flame has not been established by the end of the timing period, the system will lock out, the gas valve will close and the reset function will trip out. Reset action can be thermostatic or manual, depending on the model of the furnace. As soon as a flame is established and proven by the flame sensing circuit, sparking will cease and the system will remain on, monitoring the flame until the end of the particular cycle.

If flame-out occurs during the cycle, the system will reactivate the spark to provide for re-ignition. The flame will either be reestablished or the system will be locked out in the normal manner. Should lock out occur, reset action must be taken before the unit can be recycled.

Thermostat Reset (Line Interruption) (023 and 035 Models)

If these units go into lock out due to loss of flame, the thermostat or device controlling power to the unit, should be momentarily opened to initiate recycling. Lowering the thermostat setting below room temperature will normally recycle the system. If several attempts at thermostat reset do not result in ignition, a manual reset button on the ignitor board will activate, preventing further recycling.

Manual Reset - One Try for Ignition (050 and 085 Models)

These units are wired to provide for only one try for ignition. On a call for heat, sparking is initiated and the gas valve is powered. If the flame is not established during the trial for ignition period, the system will lock out and the manual reset button will actuate. There will not be a retry for ignition. The reset button must be depressed before there can be another try for ignition.

If ignition does not occur during the trial for ignition period or after one attempt at recycling, there is the possibility of a malfunction in the burner, gas valve or ignitor. Corrective action must be taken before the unit can be recycled.

Honeywell Ignition System

Refer to Figure 49 in conjunction with the following operation sequence.

Normal Operation

1. On a call for heat (limit switch closed), terminal 1 is energized. Relay 3K pulls in to close contact 3K2 which energizes terminal 8 (fan motor).

2. With airflow proven, the low voltage airflow switch between terminals 6 and 7 closes to energize the purge timer.

3. Purging is complete in 60 seconds. Relay 1K pulls in to close contact 1K4 and energizes terminal 3 (pilot valve) and terminal 4 (ignition) through the closed flame contact 2K2. Contact 1K1 closes to energize the safety switch heater.

4. With the flame proven (pilot), relay 2K pulls in. Contact 2K2 opens to cut off ignition. Contact 2K1 opens to de-energize the safety switch heater and reset the purge timer.

5. When the thermostat setting is satisfied, all relays drop out and the system shuts down.

Figure 49
Schematic of Honeywell
Ignition System

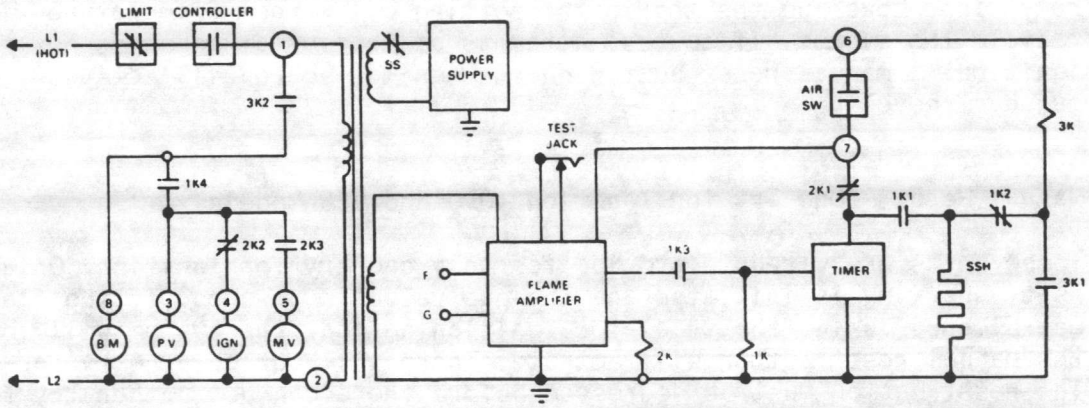

Safety Operation

1. Flame Failure - Relays 1K and 2K drop out. Contact 1K4 opens to de-energize terminals 3, 4 and 5. If airflow is still proven, the purge period begins. After prepurge, one attempt is made to start the burner.

2. Airflow Failure - Relay 1K drops out. Contact 1K4 opens to de-energize terminals 3, 4 and 5. Only terminal 8 (fan motor) remains energized. If airflow is re-established, the purge period starts and the start-up sequence is repeated.

3. Purge Timer Failure - If the plug-in purge timer is not properly seated or is not functioning properly, the fan motor will start on a call for heat, but relay 1K will not pull in. The result will be continuous purge.

Condenser Fan Sequencing

20 Ton Units

The 20 ton units are equipped with two condenser fans as shown in Figure 50. Operation of Fan No. 2 parallels that of the compressor, while Fan No. 1 operates under the control of the fan pressure switch (2S10). When liquid line pressure reaches 300 psig, Fan No. 1 will energize. When the pressure drops to 155 psig, Fan No. 1 will stop.

25 and 30 Ton Units

The 25 and 30 ton units have three condenser fans (Figure 50). Fan No. 2 operates simultaneously with the compressor. The fan pressure switch (2S10) controls the operation of Fan No. 1, energizing the fan at a liquid line pressure of 300 psig and de-energizing at 155 psig. Fan No. 3 operates when a call for second-stage cooling is initiated by the Master Energy Controller. Second-stage unloading causes Fan No. 3 to de-energize.

Figure 50
Condenser Fan
Configuration

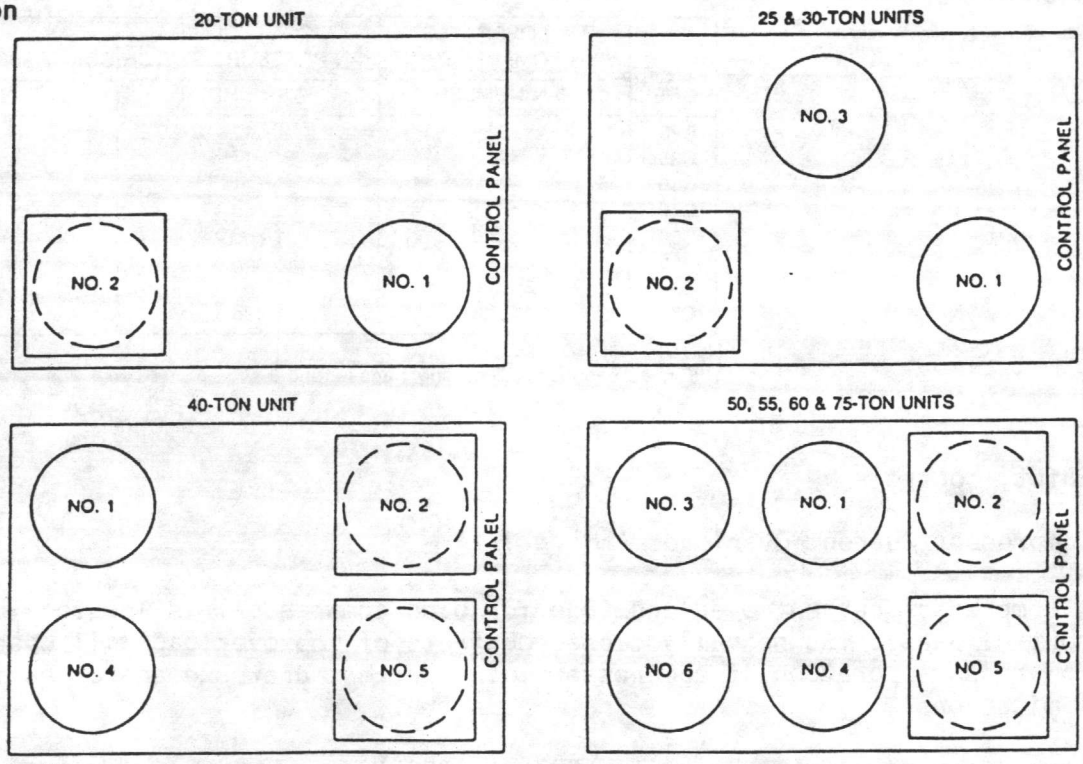

NOTES:
1. BOXES AROUND FANS INDICATE LOCATION OF OPTIONAL LOW AMBIENT DAMPERS.
2. FAN ROTATION IS CLOCKWISE (CW) AS VIEWED FROM ABOVE THE UNIT (FROM THE CONDENSER END).

40 Ton Units

The 40 ton units have four condenser fan (Figure 50). Fan No. 2 operates in conjunction with Compressor No. 1, while Fan No. 5 operates with Compressor No. 2. The operation of Fan No. 1 is controlled by the fan pressure switch (2S10) which monitors the liquid line pressure of Compressor No. 1, energizing the fan at a liquid line pressure of 300 psig and de-energizing at 155 psig. Fan No. 4 is controlled by the fan pressure switch (2S11) which monitors the liquid line pressure of Compressor No. 2, energizing the fan at 300 psig and de-energizing at 155 psig.

50, 55, 60 and 75 Ton Units

These units are equipped with six condenser fans (Figure 50). Fan No. 2 and 3 operate with Compressor No. 1, while Fans No. 5 and 6 operate with Compressor No. 2. The fan pressure switch (2S10) for Compressor No. 1 controls the operation of Fan No. 1, while the fan pressure switch (2S11) for Compressor No. 2 controls the operation of Fan No. 4. In each case, the fans will start when liquid line pressure reaches 300 psig, and stop when the pressure drops to 155 psig.

Refer to Table 18 for a summary of condenser fan sequencing.

Table 18
Condenser Fan
Sequencing

MODEL	FAN OPERATES WITH COMPRESSOR(S)	FAN CONTROLLED BY FAN PRESSURE SWITCH	FAN OPERATES WITH COMPRESSOR UNLOADING
	FAN NUMBER	FAN NUMBER	FAN NUMBER
C20	2	1	—
C25	2	1	3[1]
C30	2	1	3[1]
C40	2 and 5	1 and 4	—
C50	2,5,3,6	1 and 4	—
C55	2,5,3,6	1 and 4	—
C60	2,5,3,6	1 and 4	—
C75	2,5,3,6	1 and 4	—

NOTE:
1. Fan #3 operates with cooling stages 2 and 3.

Safety Controls

Compressor Current Overloads (1U1, 1U2)

A compressor current overload (one for each compressor) is located in the unit control panel. The normally closed contacts of the overload will open to stop compressor operation if compressor motor current draw exceeds operational limitations.

Compressor Winding Thermostats (2B7S6, 2B8S7)

Compressor motor winding thermostat(s) are embedded in the motor windings of the compressors used in 20 through 60 ton units. The normally closed contacts of the thermostats will open to stop compressor operation if motor winding temperature exceeds safe operational limits.

If the control is functioning properly, its contacts will open when the winding temperature reaches approximately 220 F. Reset is automatic when the winding temperature drops to approximately 180 F. The reset relay must be manually reset.

Compressor Motor Protectors (1U22, 1U23)

Motor protectors are used on 75 ton units to prevent compressor motor burnout. Two motor protection modules are located in the upper left-hand corner of the unit control panel.

Compressor Winding Sensors (2B7RT4, 2B8RT5)

Whenever the temperature of the compressor motors is below 200 F, the M1 and M2 contacts in the module are closed and the control circuit is energized. The control circuit remains energized until the motor cools to 170 F.

Oil Pressure Control (2B7S34, 2B8S35)

The oil pressure control contains a normally closed, heat activated, time delay mechanism. When the control senses an oil pressure less than the minimum operating oil pressure required, the time delay mechanism is activated. If normal operating pressure is not restored within the timing period, the control contacts will open and stop the compressor.

The time delay of the oil pressure control is factory set to initiate the time delay period at an oil pressure of 15 ± 2 psig. At 22 ± 3 psig, the time delay period is terminated. Depending on the voltage at the control, the time delay period is 70 to 150 seconds in duration.

Note: The oil pressures listed in this section are net oil pressures (the difference between suction pressure and operating oil pump pressure).

Reset Relay (1K11, 1K12)

The reset relay(s) are used to prevent repeated compressor cycling if one of the automatic reset controls in the safety circuit opens. If an overload, low pressure control (20 through 60 ton units), high pressure control or winding thermostat opens during compressor operation, sufficient voltage is developed across the reset relay coil to open the relay contacts. The relay coil will remain energized with open contacts. This means there will not be sufficient voltage available for the remainder of the control circuit, causing the compressor motor contactors and fan contactors to de-energize.

To reset the control device and restart the system, turn the control circuit switch (1S1) to OFF and back to ON. This will return power to the control circuit, provided that the high pressure cut-out, compressor overloads and/or winding thermostats have had time to automatically reset.

High Pressure Switch (2B7S2, 2B8S3)

A normally closed set of contacts will open when discharge pressure increases to approximately 405 psig and close when the pressure drops to approximately 300 psig. The high pressure switch is attached to a snubbing device that reduces hot gas pulsations, enabling the control to read an average pressure.

Low Pressure Switch (2B7S4, 2B8S5)

The low pressure control has a set of normally closed contacts. On units with Model K compressors, the contacts open when suction pressure drops to 25 psig, and close when pressure reaches 40 psig. On units with Model R compressors, the contacts open when suction pressure drops to 7 psig and close when pressure reaches 22 psig.

Low Ambient Time Delays (1U5, 1U6) and
Low Ambient Time Delay Relays (1K13, 1K14)

The low ambient option on 75 ton units is used to bypass the low pressure control for a period of three minutes. This allows discharge pressure to build up under low ambient conditions, and insures proper feeding of liquid refrigerant to the evaporator by the thermal expansion valves.

Low Pressure Timers (1U24, 1U25)

Low pressure timers are used only in 20 through 60 ton units. These devices are used to bypass the low pressure control for a period of five minutes. This allows discharge pressure to build up and insures proper feeding of liquid refrigerant to the evaporator by the thermal expansion valve(s).

Condenser Fan Pressure Control (2S10, 2S11)

The condenser fan pressure control energizes the last condenser fan in each compressor circuit in response to discharge pressure. The fan switch cut-in point is 300 psig. Each switch will cut out when the discharge pressure drops to 155 psig.

Freezestat (4S12)

The freezestat is available only on steam (SSHC) or hot water (SLHC) units. This control monitors the ambient temperature of the hot water or steam coil compartment, and guards against freeze-up of the heating coil when it is de-energized. If the sensing bulb detects an ambient temperature below the minimum acceptable temperature, the freezestat contacts will open. This activates the steam or hot water valve, allowing the flow of steam or hot water through the coil, preventing coil freeze-up. The supply air fan will also shut down at this time. The freezestat contacts open at approximately 30 F and close at approximately 43 F.

Compressor Lockout Thermostat

The optional compressor lockout thermostat is a line voltage thermostat located in the fresh air intake section behind the enthalpy control. This control will prevent compressor operation below its setpoint. The compressor lockout thermostat is adjustable and is factory set at 50 F.

Perform all of the indicated maintenance procedures at the intervals scheduled. This will prolong the life of the unit and reduce the possibility of equipment failure. A maintenance log is provided at the end of this section to record operating conditions and pressures.

WARNING: DISCONNECT THE POWER SOURCE TO THE UNIT AND ALLOW ALL ROTATING PARTS TO STOP COMPLETELY BEFORE SERVICING OR INSPECTING THE SYSTEM. FAILURE TO DO SO MAY RESULT IN INJURY OR DEATH FROM ELECTRICAL SHOCK OR ENTANGLEMENT IN MOVING PARTS.

Weekly

[] Check the condition of the refrigerant as indicated by the liquid line sight glass/moisture indicator(s).

[] Check the compressor oil level.

[] Check unit suction and discharge pressures.

[] Generally inspect the unit for unusual conditions such as a noisy compressor, loose access panels, leaking piping connections, etc. Be sure to replace all retaining screws in the access panels and condenser grilles.

Monthly

Perform the monthly maintenance inspections once each month all year unless otherwise indicated.

WARNING: OPEN AND LOCK UNIT DISCONNECT TO PREVENT INJURY OR DEATH FROM ELECTRICAL SHOCK OR CONTACT WITH MOVING PARTS.

[] Inspect the air filters and clean or replace as necessary.

[] Check the unit wiring to be sure all connections are secure.

WARNING: TO PREVENT INJURY OR DEATH DUE TO ELECTRICAL SHOCK OR CONTACT WITH MOVING PARTS, NEVER ATTEMPT REPAIRS OR INSPECTION OF THE ELECTRICAL CIRCUIT UNLESS THE UNIT HAS BEEN DISCONNECTED FROM THE POWER SOURCE.

[] Check the drain pans and condensate piping to be sure they are free of obstacles. Also check the condensate drains from the optional fresh air dampers.

[] (Cooling Season Only) Manually rotate the condenser fans to check for proper operation. Inspect the fan mounting hardware for tightness.

[] (Cooling Season Only) Inspect the evaporator and condenser coils for dirt or debris, and clean if necessary.

[] (Cooling Season Only) Inspect the optional economizer dampers. Do not remove the dampers for regular maintenance, but they should be washed or hosed down regularly. Inspect the bearings and repair or replace if necessary.

[] (Heating Season Only) Check the heating coil for dirt or debris, and clean if necessary.

[] Lubricate all linkages.

Annually - Cooling Season

The following annual maintenance must be performed at the beginning of each cooling season to assure efficient unit operation.

WARNING: USE CARE WHEN MEASUREMENTS OR ADJUSTMENTS MUST BE MADE WITH THE POWER ON TO PREVENT INJURY OR DEATH FROM ELECTRICAL SHOCK OR CONTACT WITH MOVING PARTS.

[] Perform all weekly and monthly maintenance inspections.

[] Inspect the exterior of the unit. Remove any corrosion and repaint. Check the condition of the gasket around the control panel door. It must fit correctly and be in good condition to prevent water leakage.

[] Inspect the supply and optional exhaust air fan belts. Replace any that are frayed or worn.

[] Lubricate the motors of the supply and optional exhaust air fans.

[] Check the extended fan bearing lines to be sure they are installed properly and are tight to the bearings. Lubricate the bearings as discussed in the MAINTENANCE PROCEDURES section.

[] Check the bearing setscrews to be sure the shaft is held securely. Make sure that all bearing braces are tight.

[] Check all refrigerant piping and fittings for leaks.

[] Perform an oil analysis to determine the acidity of the compressor oil, and record the results.

WARNING: THE OIL ANALYSIS MUST BE PERFORMED BY A QUALIFIED TECHNICIAN. INCORRECT INTERPRETATION OF ANALYSIS RESULTS CAN CAUSE DAMAGE TO THE UNIT. USE OF IMPROPER ANALYSIS PROCEDURES CAN CAUSE HAZARDOUS CONDITIONS THAT MAY RESULT IN INJURY TO SERVICE PERSONNEL.

[] Inspect control panels and compressor junction box for tightness of terminals and connections. Insulation on the wiring must be intact.

WARNING: DO NOT PROVIDE POWER TO THE SYSTEM UNLESS THE COMPRESSOR TERMINAL COVER IS SECURED IN PLACE. SERVICING AN ENERGIZED COMPRESSOR WITH THE TERMINAL COVER REMOVED MAY RESULT IN INJURY OR DEATH IF THE GLASS-SEALED TERMINALS ARE DAMAGED. TERMINAL FAILURE MAY RESULT IN REFRIGERANT/OIL PRESSURE RELEASE, FIRE AND POSSIBLE EXPLOSION.

[] Check all control settings for accuracy.

[] Grease the inlet vane hubs.

Annually - Heating Season

Perform the following maintenance checks at the beginning of each heating season to assure efficient unit operation.

WARNING: OPEN AND LOCK UNIT DISCONNECT TO PREVENT INJURY OR DEATH FROM ELECTRICAL SHOCK OR CONTACT WITH MOVING PARTS.

[] Perform all weekly and monthly maintenance inspections that are applicable to unit operation in the heating mode.

[] Inspect all control panel wiring to be sure that all connections are tight and that the wiring insulation is intact.

[] Lubricate the supply and optional exhaust air fan bearings. Make sure the bearing braces are tight and that the fan shafts are held securely.

[] (SBHC, SFHC only) Check the firing sequence of the gas heating section. Inspect the contactors, wiring, connections, flame and ignition system to be sure they are functioning properly.

[] (SEHC only) Inspect the heater junction box and control panel. Tighten any loose connections.

[] (SLHC, SSHC only) Verify that the steam or hot water required for these units to operate in the heating mode is being supplied to the unit.

Maintenance Procedures

WARNING: DISCONNECT THE POWER SOURCE TO THE UNIT AND ALLOW ALL ROTATING PARTS TO STOP COMPLETELY BEFORE SERVICING OR INSPECTING THE SYSTEM. FAILURE TO DO SO MAY RESULT IN INJURY OR DEATH FROM ELECTRICAL SHOCK OR ENTANGLEMENT IN MOVING PARTS.

Air Filters

Clean or replace the unit air filters on a regular basis. Be sure to use the same type, size and number as the old filters. Be sure the direction arrow on each filter points toward the supply fan(s). Slide-in rails (Figure 51) hold the filters in place. Table 19 gives filter size and number information.

Lubrication

Fan Bearings

The fan shafts of supply and optional exhaust/return fans are mounted on grease-lubricated ball bearings designed for an average life of 200,000 hours. Optional extended grease lines allow fan bearing lubrication through the filter access door. Typically, the fan bearings should be greased at the beginning of each cooling and heating season. Table 20 provides specific bearing lubrication recommendations.

Figure 51
Unit Filter Section
(with Access Door Open)

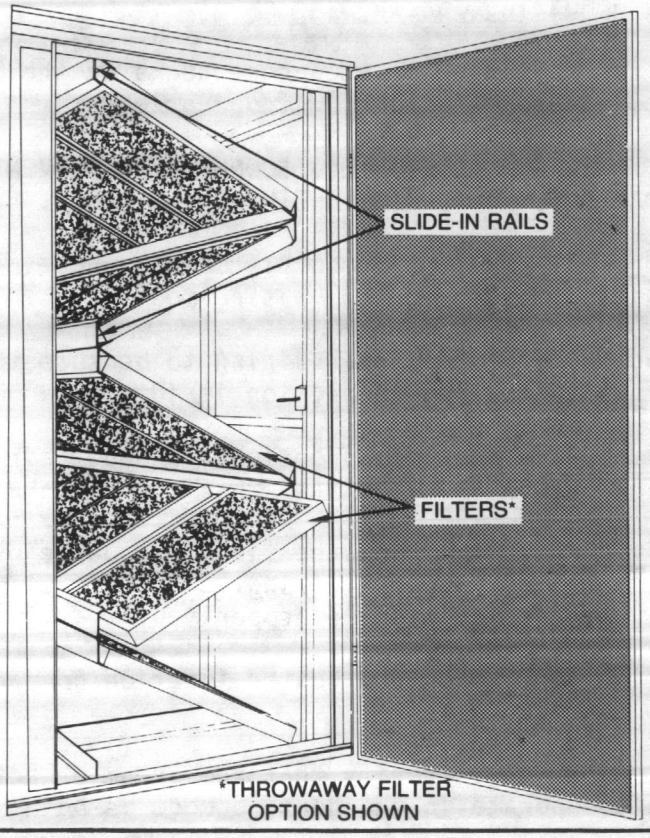

Table 19
Filter Sizes

UNIT SIZE	PANEL		BAG	
	NUMBER	FILTER SIZE	NUMBER	FILTER SIZE
C20	12	20x20x2	3 3	12x24x21 24x24x21
C25	12	20x20x2	3 3	12x24x21 24x24x21
C30	16	20x20x2	6	24x24x21
C40	16	20x25x2	3 6	12x24x21 24x24x21
C50	20	20x25x2	9	24x24x21
C55	20	20x25x2	9	24x24x21
C60	35	16x20x2	6 8	12x24x21 24x24x21
C75	35	16x20x2	6 8	12x24x21 24x24x21

Table 20
Recommendations for
Grease-Lubricated Bearings

	GREASING INTERVALS	
OPERATING CONDITIONS	-20 F to 140 F	140 F to 200 F
Clean, Dry	3-6 Months	1-3 Months
Dirty, Dry	1-3 Months	1-4 Weeks
Dirty, Wet, High Humidity	1-4 Weeks	1-14 Days
RECOMMENDED GREASES	RECOMMENDED OPERATING RANGE	
Mobile Armac 781	-20 F to 250 F	
Shell Alvania No. 2	-20 F to 250 F	
Mobile Mobilux No. 2	-20 F to 250 F	
Exxon Univex N2	-20 F to 250 F	
Gulf Gulfcrown RRB	-40 F to 225 F	
Exxon Beacon	-65 F to 250 F	
Keystone Keystone 84H	-40 F to 225 F	

NOTE: Greases used should conform to NLGI No. 2 penetration.

Fan Motors

The fan motors should be greased once each year. To lubricated these motors, remove the vent plugs and clean out the openings. Use a hand grease gun to add fresh grease, and run the motor without replacing the vent plugs to distribute the grease and drive out any excess grease. If any grease works out around the motor shaft, less grease should be added in the future and the interval between motor lubrications can be extended.

Linkages

All linkages in the unit should be lubricated once each month. Spray the linkage joints with penetrating oil and lubricate them with motorcycle chain lubricant.

Fan Belt Adjustment

Note: Belt tension should be checked and adjusted at least twice during the first days of new belt operation. There will be a rapid decrease in belt tension until the belts are run in.

Proper fan belt tension is required to insure maximum bearing and drive component life and is based on fan brake horsepower requirements. If the belts are frayed or worn, replace them.

Measure fan belt tension with a Browning, Gates or equivalent belt tension gauge. Deflection is determined by dividing the belt span distance (in inches) by 64. See Figure 52.

CAUTION: Do not overtighten the fan belts. Excessive tension will reduce fan and motor bearing life, accelerate belt wear and possibly cause shaft failure.

Gas Furnace Section (SBHC, SFHC Only)

Should maintenance be required on the furnace section, turn off the main gas valve and electrical power to the unit.

Access to the burner and electrodes is obtained by removing the inner access panel. To clean the burner, remove the nuts and brush both sides of the casting

Figure 52
Using a Belt
Tension Gauge

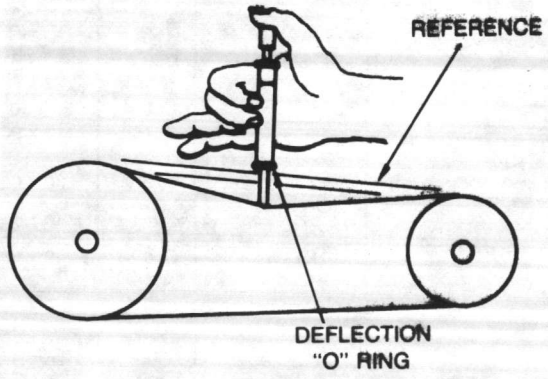

with a wire brush. Replace the gaskets when reinstalling the burner. The access panel must be in place and secured prior to igniting the burners.

A removable panel is provided at the rear of the unit to facilitate cleaning of the secondary heat exchanger tubes if necessary.

The spark gap for the Fenwal ignition system is .125".

Coil Cleaning

All unit coils (refrigerant, steam or hot water) must be cleaned at least once each year to maintain proper unit operating efficiency. Clean them more often if the unit is located in a dirty environment. Use the following procedure to clean the coils:

1. Disconnect power to the unit.

   WARNING: OPEN AND LOCK UNIT DISCONNECT TO PREVENT INJURY OR DEATH FROM ELECTRICAL SHOCK OR CONTACT WITH MOVING PARTS.

2. Remove enough unit panels and parts to gain access to the coil.

3. Straighten coil fins with a fin rake, if necessary. To determine the proper fin rake size, refer to Table 21 for steam and hot water coil fin data and Table 22 for evaporator and condenser coil fin data.

4. Use a soft brush to remove loose dirt and debris from both sides of the coil.

5. Flush the coil with water from the leaving air side.

6. Clean steam and hot water coils with a steam-cleaning machine.

   Clean refrigerant coils with cold water and detergent, or with a commercially available chemical coil cleaner. Rinse coils thoroughly after cleaning.

Table 21
Coil Fin Data for Steam and Hot Water Coils

UNIT HEATING FUNCTION	UNIT SIZE	COIL SIZE (IN.)	COIL TYPE	ROWS/FINS PER FT.	
				HIGH HEAT	LOW HEAT
Steam	C20, C25 & C30	30 x 66	NS	1/96	1/42
	C40, C50 & C55	30 x 66 & 12 x 66	NS	1/96	1/42
	C60 & C75	30 x 90 & 12 x 90	NS	1/72	1/42
Hot Water	C20, C25 & C30	30 x 66	WC, Prima Flo	2/110	2/80
	C40, C50 & C55	42 x 66	WC, Prima Flo	2/110	2/80
	C60 & C75	42 x 90	WC, Prima Flo	2/110	2/80

Table 22
Coil Fin Data for
Evaporator and
Condenser Coils

COIL FUNCTION	UNIT SIZE	COIL SIZE (FT.²)	STANDARD ROWS/FINS PER FT./ TUBE DIA. (IN).	HIGH CAPACITY ROWS/FINS PER FT./ TUBE DIA. (IN.)	FIN CONFIGURATION
Evaporator	C20	16.9	3/108/½	3/144/½	Wavy
	C25	21.0	3/108/½	3/144/½	Wavy
	C30	25.1	3/108/½	3/144/½	Wavy
	C40	33.9	3/108/½	3/144/½	Wavy
	C50	39.3	3/108/½	3/144/½	Wavy
	C55	39.3	3/108/½	3/144/½	Wavy
	C60	44.7	3/120/½	3/144/½	Wavy
	C75	44.7	3/144/½	—	Wavy
Condenser	C20	31.1	3/168/⅜	—	Wavy-3B
	C25	35.0	3/156/⅜	—	Wavy-3B
	C30	46.3	3/168/⅜	—	Wavy-3B
	C40	63.2	3/168/⅜	—	Wavy-3B
	C50	70.0	3/156/⅜	—	Wavy-3B
	C55	70.0	3/156/⅜	—	Wavy-3B
	C60	88.0	3/168/⅜	—	Wavy-3B
	C75	88.0	3/168/⅜	—	Wavy-3B

CAUTION: Do not clean the refrigerant coil with hot water or steam, as they will create high pressure inside of the coil tubing causing subsequent damage to the coil.

7. Inspect the coil. If it still appears dirty, repeat Step 5.

8. Replace all unit panels and parts, and restore electrical power to the unit.

System Pumpdown

System pumpdown is used to isolate the unit refrigerant charge in the condenser coil (high side), where it is stored during periods of extended shutdown. It is also acceptable to make repairs on the low side of the system (repair leaks, replace components, etc.) when the refrigerant is isolated in the high side.

Note: Do not use this procedure to isolate the refrigerant charge during repairs on units equipped with the hot gas bypass option. The charge must be removed from these units.

1. Open the unit disconnect switch(es).

WARNING: OPEN AND LOCK UNIT DISCONNECT TO PREVENT INJURY OR DEATH FROM ELECTRICAL SHOCK OR CONTACT WITH MOVING PARTS.

2. Install pressure gauges on the unit suction and discharge service valves.

3. Place a jumper across the terminals of the low pressure cut-out switch(es) (2B7S4, 2B8S5).

4. Close the liquid line shut-off valve.

5. Close the unit disconnect switch(es) and start the unit.

6. Monitor the suction pressure gauge. When the gauge reading falls to 2 to 3 psig, shut off the unit.

7. Frontseat (close) the compressor discharge valve.

Note: If suction pressure rises, repeat the pumpdown procedure until the pressure holds at 2 to 3 psig.

8. Remove the jumper across the terminals of the low pressure cut-out switch(es).

At this point, the refrigerant charge is isolated in the high side of the system, primarily in the condenser coil. The seasonal shutdown procedure or low side repairs can now be completed.

Trouble Analysis

If operating difficulties are encountered, be sure to make the following preliminary checks before contacting the local Trane service technician:

[] Check the discharge air controller to be sure it is properly set, receiving control power and making/breaking on a call for heating or cooling.

[] Verify that the unit is receiving electrical supply power and that the fuses are intact.

[] Check the air filters to be sure they are positioned properly and that they are free of dirt and debris.

[] Be sure that the steam or hot water (SSHC, SLHC only) is being supplied to the unit.

[] Make certain that the unfused disconnect switches in the unit control panel and heating section are closed (SEHC only).

[] Be sure that the gas is turned on during the heating cycle (SBHC, SFHC only).

[] Verify that the manual ON/OFF switch (4S24) in the heating control panel is in the ON position (SBHC, SFHC only).

After completing these checks, be sure to inspect the unit for other obvious causes of trouble such as broken fan belts, a clogged condenser coil, restricted air ducts, etc.

When mechanical problems do occur, it is recommended that trained service personnel be contacted to help assure proper diagnosis and repair of the unit.

For further information on this product or other Trane products, refer to the "Trane Service Literature Catalog", ordering number IDX-IOM-1. This catalog contains listings and prices for all service literature sold by Trane. The catalog may be ordered by sending a $20.00 check to: The Trane Company, Service Literature Sales, 3600 Pammel Creek Road, La Crosse, WI 54601.

PRINTED BY PRODUCTION SERVICES — LA CROSSE KC /LW

TRANE™

Supplement

Installation Operation Maintenance

SAHC-IOM-3

Library	Service Literature
Product Section	Unitary
Product	Rooftop Air Conditioning
Model	SAHC, SBHC, SEHC, SFHC, SLHC, SSHC
Literature Type	Installation/Operation/Maintenance
Sequence	3
Date	December 1986
File No.	SV-UN-RT-SAHC-IOM-3-1286
Supersedes	

Single-Zone Rooftop Air Conditioners

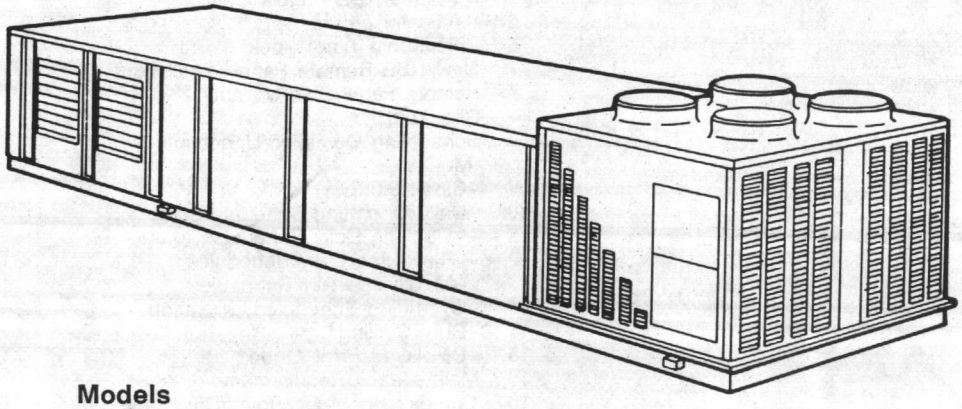

Models

S*HD-C20 thru -C30
S*HC-C20 thru -C75
S*HE-C90 and -D11

Constant and Variable Air Volume Applications

This supplement includes updated installation and operation information for night setback panels used with these units, as well as revised electrical data for S*HE units. Use it in conjunction with these manuals:

SAHD-IOM-1
SAHD-IOM-2
SAHC-IOM-1
SAHC-IOM-2
SXHE-IOM-1A

Since The Trane Company has a policy of continuous product improvement, it reserves the right to change specifications and design without notice. The installation and servicing of the equipment referred to in this booklet should be done by qualified, experienced technicians.

Contents

Overview

Beginning in January 1987, commercial and light commercial rooftop units ordered with the night setback (NSB) accessory panel option will ship with a redesigned remote NSB panel. An explanation of the new panel's operation--including switch settings and time clock setup instructions are described here.

This supplement also includes updated compressor RLA (rated load amp) values for 90- and 105-ton S*HE units.

Use the information presented here in conjunction with the installation/ operation/maintenance manual and wiring diagrams that shipped with the unit.

Table of Contents

3 **S*HE, S*HC and S*HD Units**
3 Redesigned Accessory Remote Panel w/NSB
3 --System Switch
3 --Fan Switch (Constant Volume NSB Panels Only)
6 --Heat Setback Switch (Constant Volume NSB Panels Only)
6 --Indicator Lights
6 --Electronic Time Clock
7 New NSB Remote Panel Installation
7 Remote Panel Start-Up and Checkout
9 Scheduling Occupied/Unoccupied Modes
9 --Clock Setup
10 --Daily Operating Schedule Setup
12 ----Copying Daily Schedules
12 ----Reviewing Daily Schedules
13 ----Modifying Daily Schedules
14 --Overriding Scheduled Operation
15 --Duty Cycling
15 --Displayed Error Codes
15 Maintenance Requirements
16 Comparison of Occupied/Unoccupied Modes in Constant Volume and VAV Control Systems (Table 2)

17 **S*HE Units Only**
17 Revised S*HE Electrical Data

The Trane Company
La Crosse, Wisconsin 54601-7599
Printed in U.S.A.

©American Standard Inc. 1987

Redesigned Accessory Remote Panel w/NSB

Figure 1 illustrates both the constant and variable air volume versions of the redesigned night setback accessory panel. Compare this illustration with Figure 2 which shows the existing (or "old"-style) NSB panel.

Like the existing panel it replaces, the new NSB panel includes 5 indicator lights, a 2- or 4-position system switch, and--in constant volume applications only--a 2-position fan switch. (Notice that the system and fan switches on the new panel are control knobs rather than sliding switches.) In addition, the new panel also includes a "heat setback" control setting and a simplified electronic time clock.

Explanations of these panel features are provided in the following paragraphs.

Note: The terms "occupied" and "unoccupied" are often used to describe setpoints and system operating modes in this manual. Keep in mind that "occupied" refers to daytime system operation; that is, the hours of the day that the building is occupied and a cooling load exists. "Unoccupied" is used interchangeably with the terms "setback" or "night setback", and typically refers to nighttime hours when the building is virtually empty and cooling is not required.

To assure that you understand the basic differences between "daytime" (occupied) and "night setback" (unoccupied) operation in constant volume and VAV control systems, review Table 2 at the end of this section.

System Switch

Located at the center of the remote panel faceplate (Figure 1), the system switch governs operation of the unit's cooling--and, if applicable--heating cycles. The type of system control at the unit (constant volume or VAV) determines whether 2 or 4 system switch positions are available. These switch positions are described below.

[ ] **Off.** With the system control knob set at "Off", operation of the unit's cooling and heating cycles is locked out.

[ ] **Auto.** This switch setting enables the unit to provide cooling and heating (as available) in both the "occupied" and "unoccupied" modes of operation.

Refer to Table 2 (found near the end of this booklet) for a more detailed explanation of unit operation when the system switch is set at "Auto".

[ ] **Cool.** Available only on **constant volume** versions of the NSB panel, this switch position locks out heating cycle operation; the unit's cooling section will operate as necessary to maintain the "occupied" cooling setpoint set at the room thermostat.

[ ] **Heat.** Found only on **constant volume** versions of the NSB panel, this switch position locks out cooling cycle operation; the unit's heating section will operate as necessary to maintain the "occupied" and "unoccupied" heating setpoints at the room thermostat.

Fan Switch (Constant Volume NSB Panels Only)

This 2-position control knob allows the operator to select between the following modes of fan operation:

[ ] **Auto.** When the system is operating in the **occupied** mode, and:

a. the system switch is set at either "Auto" or "Cool", the supply fan runs continuously.

b. the system switch is set at "Heat", the supply fan cycles on and off with the unit's heating section. (If the unit does not include a heat section, the supply fan remains off.)

c. the system switch is set at "Off", the supply fan is also off.

When the system is operating in the **unoccupied** (or night setback) mode, and:

d. the system switch is set at either "Auto" or "Heat", the supply fan cycles on and off with the unit's heating section (provided it has one).

e. the system switch is set at either "Cool" or "Off", the supply fan remains off.

[ ] **On.** When the system is operating in the **occupied** mode, the supply fan runs continuously regardless of system switch position.

If the system is presently in the night setback--or **unoccupied** mode, and:

a. the system switch is set at either "Auto" or "Heat", the supply fan cycles on and off with the unit's heating section (provided that it has one).

b. the system switch is set at either "Cool" or "Off", the system fan remains off.

Figure 1
New Accessory Night Setback (NSB) Panel

Top View (VAV or Constant Volume Panels)

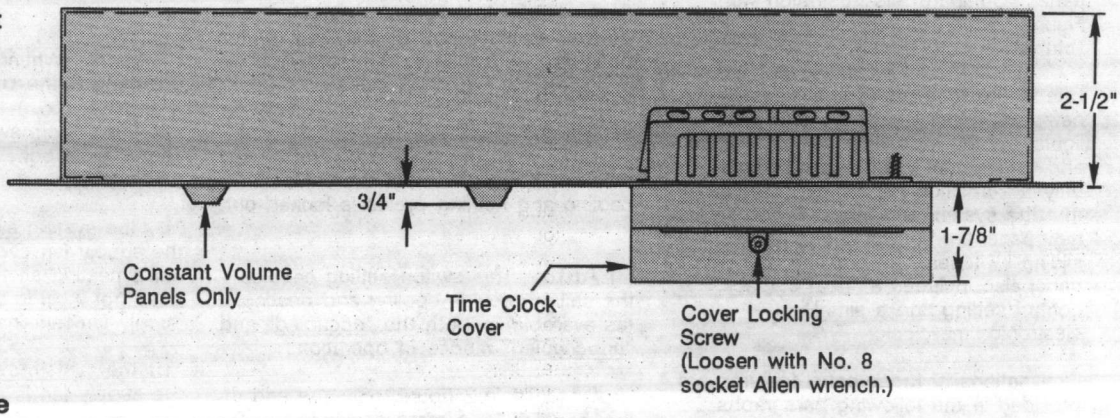

Front View (Constant Volume Panels)

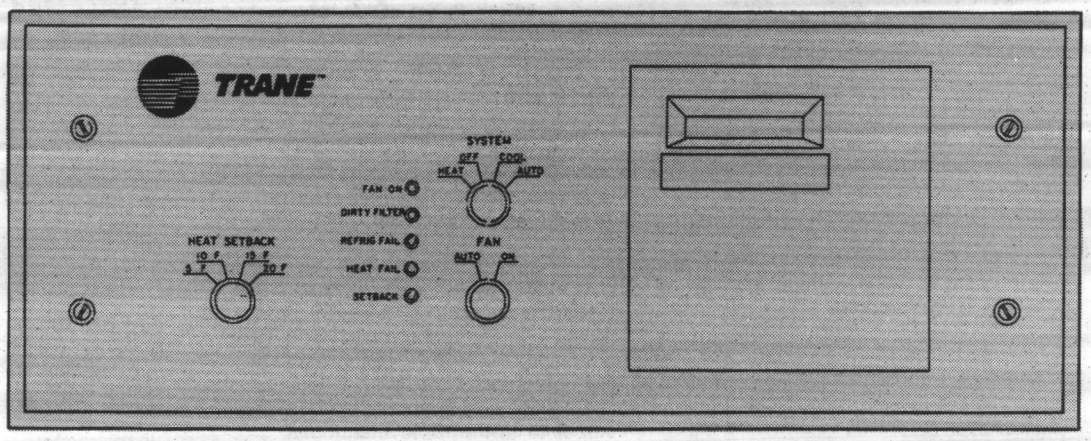

Front View (VAV Panels)

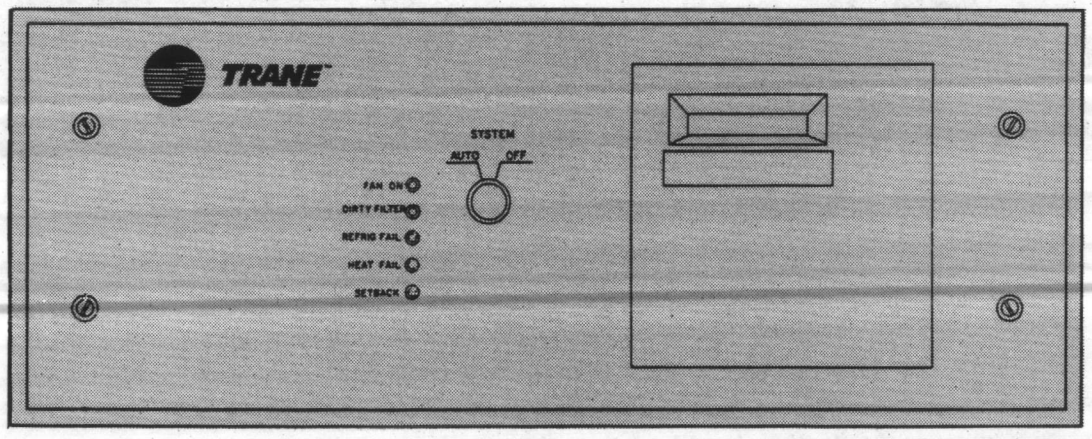

Drwg. X13690072A

Figure 2
"Old"-Style Night Setback Panel

Constant Volume Panels

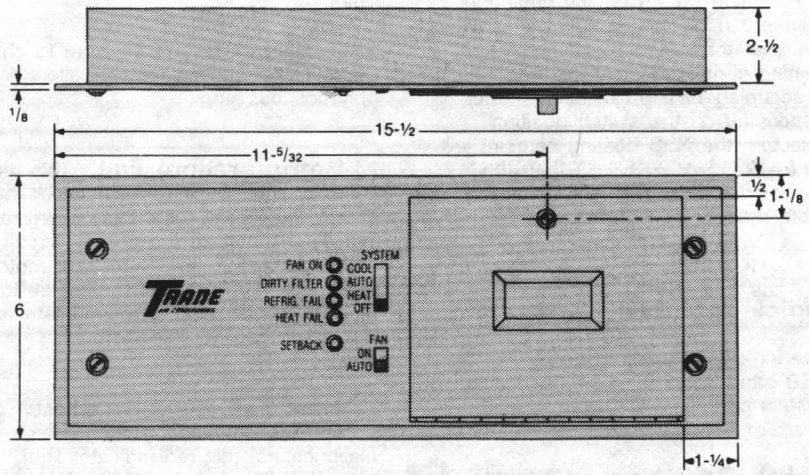

Variable Air Volume (VAV) Panels

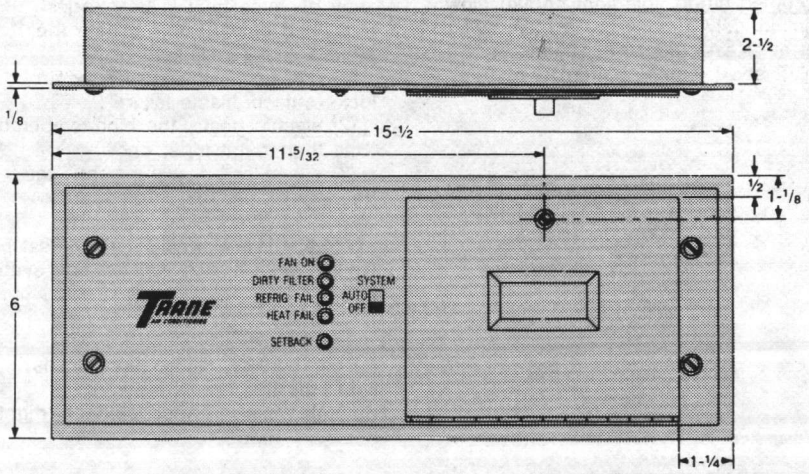

Notes:

1. Dimensions of the new NSB panel (Figure 1) are identical to those shown above for the existing (or "old"-style) panel.

2. All dimensions in inches.

Heat Setback Switch (Constant Volume NSB Panels Only)

A 4-position switch on the constant volume version of the NSB panel allows the operator to select an effective heating control setpoint for the unoccupied--or night setback--mode. Depending on the switch position selected, the NSB heating setpoint will be 5, 10, 15 or 20 F less than the occupied heating setpoint set at the room thermostat.

Indicator Lights

Five indicator lights on the face of the NSB panel allow the operator to monitor system operation.

[ ] **Fan On.** This green indicator light is illuminated whenever the unit supply fan is operating. During the occupied mode, this light should glow continuously (unless the system switch is set at "Heat" [constant volume units only]; see "System Switch").

[ ] **Dirty Filter.** Illumination of this red indicator light indicates that the filter pressure switch detected an unacceptable drop in airflow across the filters.

If this light comes on, be sure to check the unit filter section for dirty filters, obstructions, etc.

[ ] **Refrig(eration) Fail.** This red indicator light illuminates whenever the 1st- or 2nd-circuit reset relay energizes, indicating that 1 of the cooling circuit safety devices (e.g., compressor motor overloads, high pressure cutout switch, or compressor winding thermostats) shut down unit cooling operation.

[ ] **Heat Fail.** If the unit's heat section (cooling/heating units only) malfunctions, this red indicator light glows continuously, signalling the operator that service is required.

Any of these heat failure modes described below will illuminate the panel's "Heat Fail" light:
(1) gas heat: the ignition control locks out on "flame failure";
(2) electric heat: the high-temperature -limit thermostat trips; or,
(3) steam or hot water heat: the freezestat trips.

Note: It is normal for the "Heat Fail" light to flash occasionally during system operation.

[ ] **Setback.** Illumination of this light indicates that the system is operating in the unoccupied--or "night setback"--mode.

Electronic Time Clock

At the right of the panel system switch is a programmable electronic time clock module that allows the operator to schedule "begin" and "end" times--on a daily basis--for occupied (daytime) and unoccupied (night setback) system operation.

A blue fluorescent display on the time clock module indicates:

a. the **day of the week** by number. (That is, "1" is Monday, "2" is Tuesday, "7" is Sunday and so on.)

b. actual **load status.** The "I¯I" symbol represents the "load on" or occupied (daytime) mode, while "I_I" indicates "load off" or night setback (unoccupied) operation. (Remember that the NSB panel's "Setback" indicator light also illuminates when the load status shown on the time clock is "I_I".)

c. actual **time of day** in the 12-hour format. Notice that the display also includes an a.m. ("A") or p.m. ("P") indicator.

See Figure 3.

Note: The time clock display entries just described are only displayed when the module is in the "run" mode. (See "Time Clock Setup".)

Figure 3
Time Clock Display on Accessory NSB Panel

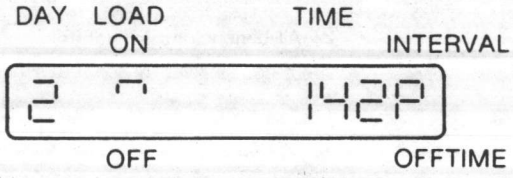

In this example, the time clock indicates that it is Tuesday ("Day 2"), the system is in the occupied ("Load On") mode, and it is presently 1:42 p.m.

New NSB Remote Panel Installation

The new NSB panel (Figure 1) is installed in the same manner as the "old"-style panel; overall panel dimensions also remain the same. (Refer to Figure 2.)

Appropriate field electrical connections are shown on the wiring diagrams that ship with the unit.

Important! Since the 9-volt battery provided with the panel will only hold its charge for 48 hours, do not install the battery in the time clock (Figure 4) until you are ready to connect 24 VAC supply power to the NSB panel.

Remote Panel Start-Up and Checkout

Once the accessory NSB remote panel is installed and you are ready to start up the rooftop air conditioning system, complete the following checkout procedure to ensure that the panel time clock works properly.

1. Verify that there is 24-volt supply power at Terminals 7 and C on the remote panel terminal strip. (Numerals should be lit on the time clock display.)

2. Check the voltage output of the 9-volt battery that shipped with the panel; the voltage measured must be at least 8.2 volts.

If battery output is less than 8.2 volts, replace it.

Note: Battery outputs less than 8.2 volts will not guarantee memory retention in the event of a power outage.

3. Check the time clock module's memory retention function; to do this:

a. Install a 9-volt battery in the battery compartment of the time clock. See Figure 4.

b. Connect the 24-volt power supply to the remote panel; refer to the wiring diagrams that shipped with the unit for terminal strip connections.

c. Program the time clock with the daily operating schedule. See "Scheduling Occupied/Unoccupied Modes" for schedule setup instructions.

d. Disconnect the 24-volt power supply leads from Terminals 7 and C on the remote panel terminal strip. After approximately 1 minute, reconnect these wires to the appropriate terminals.

e. Review the daily schedules established in Step 3c. (See "Reviewing Daily Schedules".)

If the day-to-day operating schedules programmed in Step 3c are still there, the memory retention circuit is operational.

4. Verify that the time clock's switching action works properly. To do this:

a. Review the instructions provided under "Overriding Scheduled Operation".

b. Disconnect the loads from the remote panel terminal strip, but do not remove the 24-volt power supply wires from panel Terminals C and 7.

c. Press the "Load On" key (Figure 4) to manually initiate the occupied mode; then use an ohmmeter to check for continuity between Terminals 7 and 1, and Terminals 7 and 12. See Figure 5.

If the occupied mode was successfully initiated, you will read an open circuit between Terminals 7 and 12, and a closed circuit between Terminals 7 and 1.

d. Press the "Load Off" key (Figure 4) to manually initiate the unoccupied mode. Again, check for continuity between Terminals 7 and 12, and Terminals 7 and 1.

If the time clock module successfully completed changeover to the unoccupied mode, you will read an open circuit between Terminals 7 and 1, and a closed circuit between Terminals 7 and 12.

Figure 4
NSB Panel Electronic Time Clock Module

(Shown w/Locking Cover Removed)

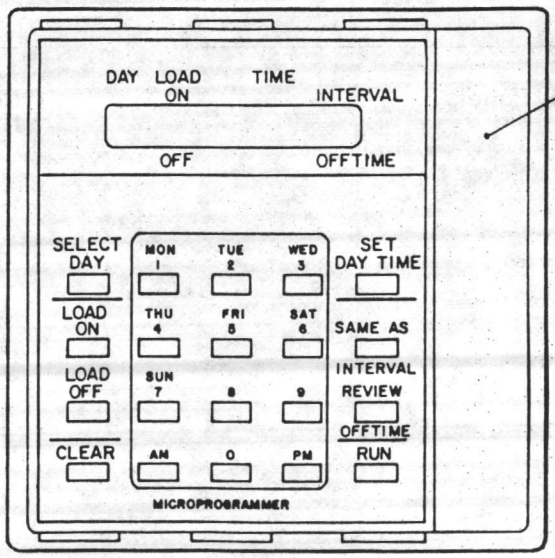

Note: One 9-volt, nonrechargeable alkaline battery ships with each NSB panel. Do not install the battery until the panel is powered up.

Drwg. X13690072A

Figure 5
Remote NSB Panel
Functional Schematics

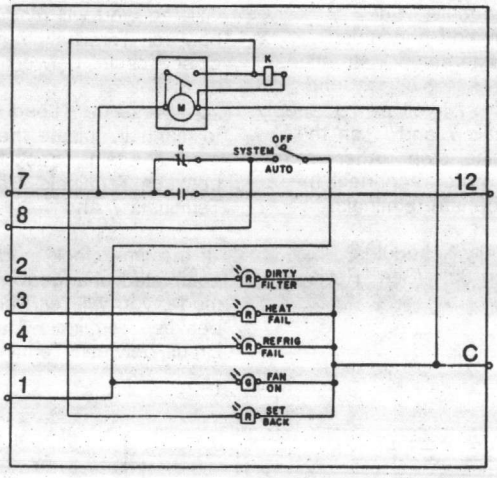

VAV NSB Panels

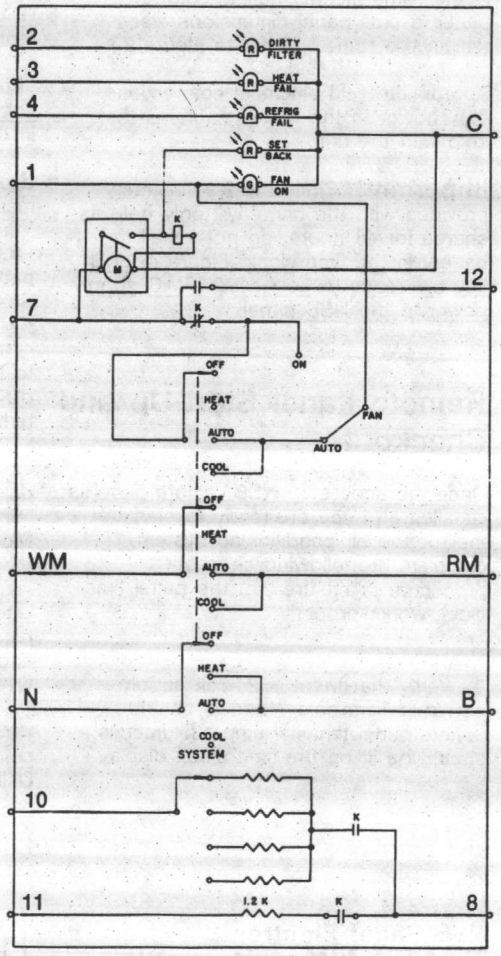

Constant Volume
NSB Panels

Drwg. X13690072A

Scheduling Occupied/ Unoccupied Modes

The electronic time clock module of the new NSB panel allows the operator to program independent system operating schedules--with a maximum of 2 "on" and 2 "off" times--for each day of the week.

Notice that the clock display is "partitioned" into 3 sections: "Day", "Load On/Off" and "Time". A dash prompt ("-") in any of these sections "tells" the operator what program entry to make next.

Time clock setup instructions are provided in the following paragraphs, and are summarized on the inside of the time clock's locking cover. See Figure 6.

Note: To remove the cover from the time clock module, use a No. 8 socket Allen wrench.

Clock Setup

Note: Remember that numbers are used to represent the days of the week (e.g., "1" is Monday, "2" is Tuesday, etc.). Time of day is entered and displayed in the 12-hour format. Valid "time-of-day" values range from 1:00 through 12:59 (entered as "100" and "1259), and must include an a.m. or p.m. indicator.

Use the step-by-step instructions outlined below--and summarized in Figure 7--to set the time clock to the present day and time:

1. Press the "Set Day/Time" key (Figure 7) to place the time clock module in the "clock set" mode.

When this key is pressed, a dash ("-") will appear on the clock display; this prompts the operator to enter the day of the week (see Step 2).

2. Press the button that corresponds to the current day of the week.

If you make a mistake, simply correct the error by pressing the right key.

3. Press the "Set Day/Time" key again; the dash prompt ("-") will now appear in the "Time" section of the display.

Note: Pressing the "Set Day/Time" key repeatedly causes the dash prompt to alternate between the display's "Day" and "Time" positions.

4. Press the numeric keys that correspond to the present time of day; be sure to specify a.m. or p.m. by pressing the "AM" or "PM" key.

For example, if it is presently 1:17 p.m., press these keys: "1", "1", "7" and "PM"; "117P" will appear on the display.

If you make a mistake, just press the right keys to correct it, or press "Clear" to start from the beginning.

5. Press the "Run" key to initiate the time clock's "run" mode. The clock display will now indicate the present day of the week, load status and time of day.

Figure 6
Locking Cover of Time Clock Module

(Cover Interior Shown)

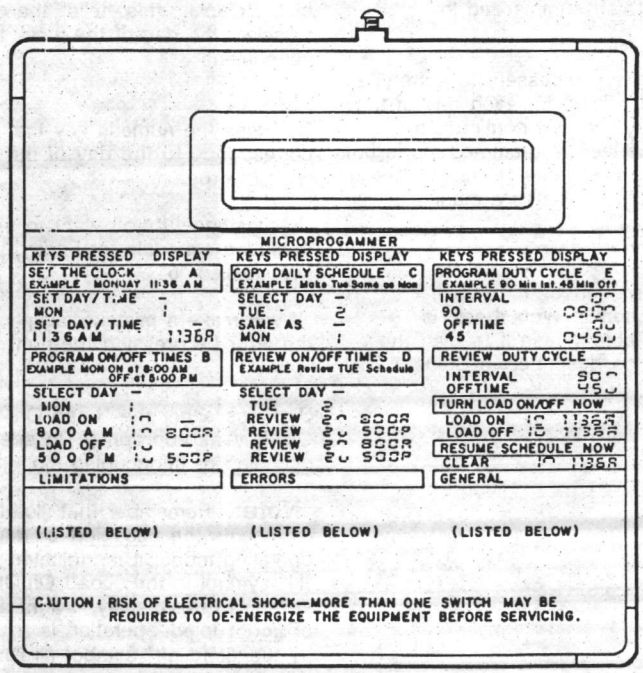

LIMITATIONS

ON/OFF TIMES MAX. 2 EA. DAY, MUST BE ENTERED IN 10 MIN. STEPS
DUTY CYCLE ENTERED IN MIN.
MAX. INTERVAL = 255 MIN.
MAX. OFFTIME = 254 MIN.
INTERVAL MUST BE GREATER THAN OFFTIME.

ERRORS

BLINKING DISPLAY, SEE LIMITATIONS.
PRESS CLEAR TO REMOVE UNWANTED ENTRY WHILE IT IS BEING DISPLAYED.
CHANGE DATA: REVIEW TO DISPLAY UNWANTED DATA, CLEAR TO REMOVE, THEN REPROGRAM.

GENERAL

LOAD ON RELAY DE-ENERGIZED.
LOAD OFF RELAY ENERGIZED.
DUTY CYCLE IS OPTIONAL.

PRESS RUN TO START

Drwg. X13690072A

Figure 7
Time-of-Day Setup

	Press	Display
Initiate "clock set" mode.	Set Day/Time	-
Enter present day of the week.	Mon 1	1
Advance to the "time-of-day" entry.	Set Day/Time	-
Enter the present time of day.	1 1 3 6	11:36
Specify a.m. or p.m.	AM	11:36A
Initiate "run" mode.	Run	1 11:36A

Daily Operating Schedule Setup

To establish a day-to-day system operating schedule, review the instructions provided below. (This procedure is also summarized in Figure 8.)

Note: It is not necessary to schedule "on" and "off" times for each day of the week. The system will continue to operate in the last programmed mode until the next scheduled changeover occurs--or until the operator initiates a manual changeover.

For your convenience, a "System Operating Schedule Worksheet" is provided in Table 1; use it to plan the program entries described in Steps 1 through 6.

1. Press the "Select Day" key to place the time clock in the "load scheduling" program mode.

Once this key is pressed, the "-" prompt will appear in the "Day" section of the display; this "tells" the operator to select the day of the week to be scheduled.

2. Press the numeric key that corresponds to the day of the week you wish to program.

For instance, if you want to set up an operating schedule for Friday, press the key labelled "5".

If you make a mistake, simply correct the error by pressing the right key.

3. Press either the "Load On" or "Load Off" key--as appropriate--to specify the occupied or unoccupied mode.

Note: Remember that "load on" represents the occupied--or daytime--operating mode; it is indicated by the "|_|" symbol in the "Load On/Off" section of the display. Night setback--or unoccupied--operation is represented by the "load off" symbol ("|‾|").

Once the load status is selected, the "-" prompt moves to the "Time" section of the display.

4. Enter the time of day--including a.m. or p.m.--that the operating mode selected in Step 3 is to begin. Time-of-day values entered here must be in 10-minute increments (e.g., 7:20, 10:10, etc.).

If you make a mistake, correct the error either by pressing the right keys in the proper order, or pressing "Clear" to start from the beginning.

5. To program an operating mode change--from daytime to night setback operation, for instance--repeat Steps 3 and 4. (Remember that it is possible to program up to 2 "on" and 2 "off" times per day.)

6. Repeat Steps 1 through 5 to establish daily operating schedules for the remaining days of the week.

Note: It is possible to copy an established operating schedule from one day to another; see "Copying Daily Schedules".

7. Once all of the desired program entries are complete, press "Run". The daily operating schedules just set up in the preceding steps will go into effect immediately.

Figure 8
Daily Operating Schedule Setup

	Press	Display
Initiate "load scheduling" mode.	Select Day	
Select day to be programmed.	Mon 1	
*Specify occupied ("Load On") or unoccupied ("Load Off") mode.	Load On	
*Enter the time of day mode changeover should occur; be sure to specify a.m. or p.m.	8 0 0 AM	
*If desired, specify another mode change.	Load Off	
*Enter the time this change should occur, and specify a.m. or p.m.	5 0 0 PM	
Initiate "run" mode when programming is complete.	Run	

*Repeat asterisked steps to program additional "on" and "off" times for that day. A maximum of 2 "on" and 2 "off" times can be scheduled each day.

Repeat this entire procedure to set up schedules for the remaining days of the week.

Table 1
System Operating Schedule Worksheet

System Operating Mode	Day of the Week: Mon 1	Tue 2	Wed 3	Thu 4	Fri 5	Sat 6	Sun 7
"Load On" (Daytime/Occupied Mode Begins)							
"Load Off" (Changeover to Night Setback/ Unoccupied Mode)							
"Load On" (Changeover back to Occupied Mode)							
"Load Off" (Changeover back to Unoccupied Mode)							

Note: Once programmed, the 7-day system operating schedule is repeated until it is changed. See "Daily Operating Schedule Setup" and Figure 8 for detailed schedule setup instructions.

Copying Daily Schedules

When several of the planned daily operating schedules are the same, schedule setup can be simplified by copying the programmed schedule from one day to another.

The "copy schedule" procedure is described below and summarized in Figure 9.

1. Press the "Select Day" key to place the time clock in the "load scheduling" program mode.

Notice that the "-" prompt now appears in the "Day" section of the clock display.

2. Select the day you want to program by pressing the appropriate numeric key. (If you make a mistake, just press the right key to correct the error.)

3. Select the time clock's copy function by pressing the "Same As" key.

The "-" prompt's appearance in the "Day" section of the display indicates that the day to be copied must be selected next.

4. Press the numeric key that represents the day schedule you wish to copy. For instance, if you want to copy Monday's operating schedule, press "1".

5. Repeat Steps 1 through 4 to copy additional daily operating schedules.

6. Once all of the desired program entries are complete, press "Run". The daily operating schedules just established will go into effect immediately.

Reviewing Daily Schedules

A "review" function allows the operator to check each of the programmed daily operating schedules. To display any of the operating schedules in the time clock's memory, follow the step-by-step instructions provided below. (This procedure is also summarized in Figure 10.)

1. Initiate the time clock's "load scheduling" program mode by pressing the "Select Day" key.

Notice that the "-" prompt now appears in the "Day" section of the clock display.

2. Press the appropriate numeric key to select the day of the week you want to review. (If you make a mistake, simply press the right key to correct the error.)

3. Select the time clock's review function by pressing the "Review" key.

When this key is pressed, the first schedule entry for the day selected is displayed. (Zeros will appear across the display if no schedule entries were programmed for that day.)

4. Press the "Review" key again to advance to the next program entry in that day's operating schedule.

Note: Since it is possible to program as many as 4 schedule entries (2 "on" times and 2 "off" times) for a given day, be sure to press the "Review" key at least 4 times to assure that all entries are displayed.

5. Repeat Steps 1 through 4 to review other daily operating schedules.

6. Press "Run" when you have completed your review of the day-to-day operating schedules.

Figure 9
Copying Daily Schedules

	Press	Display
Initiate "load scheduling" mode.	Select Day	
*Select day to be programmed.	Tue 2	
*Specify "copy" function. of-day" entry.	Same As	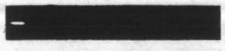
*Select the day to be copied.	Mon 1	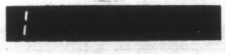
Initiate "run" mode when programming is complete.	Run	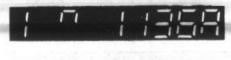

*Repeat asterisked steps to copy additional daily schedules.

Figure 10
Reviewing Daily Schedules

	Press	Display
Initiate "load scheduling" mode.	Select Day	
*Select day to be reviewed.	Tue 2	
*Specify "review" function.	Review	
*Advance to next schedule entry for that day.	Review	
*Advance to next schedule entry.	Review	
*Advance to next entry. ("Review" is pressed 4 times to assure that all entries are displayed.)	Review	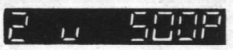
Initiate "run" mode when program review is complete.	Run	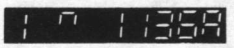

*Repeat asterisked steps to review additional daily schedules. If no schedule entries were programmed for a given day, zeros are displayed.

Modifying Daily Schedules

Follow the procedure described below (and summarized in Figure 11) to modify an existing schedule entry.

1. Press the "Select Day" key to initiate the time clock's "load scheduling" mode.

2. With the "-" prompt in the "Day" position of the display, select the day you want to reprogram by pressing the appropriate numeric key.

3. Press the "Review" key until the entry you wish to change appears on the display.

Note: To delete an existing schedule entry, go to Step 4; to alter an existing entry, see Step 5.

4. To eliminate the displayed schedule entry, press "Clear". (When this key is pressed, only the day selected in Step 2 remains on the display.)

5. If you want to change the load status or add a new "on" or "off" time to that day's schedule, then:

a. Press "Load On" (occupied mode) or "Load Off" (night setback mode) to select the desired system operating mode.

b. Enter the new time of day--including a.m. or p.m.--that this operating mode is to begin. (Remember that time-of-day values must be in 10-minute increments--that is, 7:20, 10:10, etc.).

If you make a mistake, correct the error either by pressing the right keys in the proper order, or pressing "Clear" to start from the beginning.

Note: If you do not want to enter a new time, skip Step 5b.

6. To eliminate or change additional "on" or "off" times, repeat Steps 1 through 5.

7. Once all of the desired program changes are complete, press "Run". The new daily operating schedules just established will go into effect immediately.

Figure 11
Modifying Programmed Schedules

	Press	Display
*Display entry you want to change. (Refer to Figures 8 and 10.)	Select Day Wed 3 Review	
*If desired, delete displayed entry.	Clear	
*Select desired operating mode.	Load Off	
*If desired, enter new time. (Otherwise, skip this step.)	6 0 0 PM	
Initiate "run" mode.	Run	

*Repeat asterisked steps to change additional program entries.

Overriding Scheduled Operation

To manually override the scheduled operating mode at any time, simply press either the "Load On" or "Load Off" key. Mode changeover will occur as soon as the key is pressed, and will remain in effect until the next scheduled mode change (or until another manual override is initiated).

Following is the series of keystrokes required to manually override the current system operating mode. (This procedure is also summarized in Figure 12.)

1. Make sure that the time clock is in the "run" mode. (To do this, just press the "Run" key.)

2. Press the appropriate load status key to immediately initiate a mode changeover.

If the system is presently in the occupied mode ("load on", "I I"), press the "Load Off" key to force the system into the night setback--or unoccupied--mode ("I_I").

If the system is already operating in the night setback mode, press the "Load On" key to force a mode changeover to daytime--or occupied ("I I")--system operation.

Note: Remember that a system operating mode initiated by a manual override will remain in effect until the next scheduled mode change.

3. To terminate a manual override and return control of the system operating mode to the programmed schedule, press "Clear".

Programming Hint. The time clock's manual override feature is especially convenient if a building occupant wants comfort cooling during the evening hours---when the building is normally unoccupied and the system is scheduled for night setback operation.

However, if the occupant forgets to clear the manual override, the system will continue to operate in the occupied mode until the next scheduled changeover to night setback operation.

Let's look at a specific example:

Suppose that an office building's system operating schedule calls for initiation of the occupied (or "daytime") mode at 5:40 a.m. Monday through Friday. Night setback operation is scheduled to start at 6:00 p.m. on each of these days.

On Tuesday, John Doe decides to work overtime, and at 6:15 p.m., he presses the "Load On" key to force the system into the occupied mode. Unless John remembers to clear this manual override before he leaves for the night, the system will remain in the occupied mode until 6:00 p.m. on Wednesday evening!

Since there is still an available "off" time in each of the weekday schedules, the system operator should **program a second "load off" time** at 11:50 p.m. to assure that the system does not operate in the occupied mode overnight.

Figure 12
Manually Overriding Scheduled Operation

	Press	Display
Initiate time clock's "run" mode.	Run	
Force changeover to unoccupied (NSB) mode.	Load Off	
or,		
Force changeover to occupied (daytime) mode.	Load On	
Terminate manual override.	Clear	

Duty Cycling

While duty cycling is possible with the NSB panel's electronic time clock, it is not recommended for rooftop applications.

Displayed Error Codes

Any of the illegal programming entries itemized below will cause the invalid portion of the displayed entry to flash. The steps required to clear each of these errors are also included.

[ ] Time-of-day value entered is out of range, or does not include an a.m./p.m. indicator. Valid time-of-day entries range from 1:00 to 12:59 and must include an "A" or "P".

To correct this entry:

a. Press "Clear".

b. Press the appropriate numeric keys to enter the present time of day.

c. Press either "AM" or "PM", as appropriate.

d. Press "Run".

[ ] Scheduled "on" or "off" time entered specifies the time to the minute. Remember that scheduled "on/ off" times must be entered in 10-minute increments.

To correct the error:

a. Press "Clear".

b. Reprogram a legal "on" or "off" time, as appropriate. (Refer to Figure 8 or 11 to review the steps needed to enter a scheduled "on" or "off" time.)

[ ] Schedule entries call for simultaneous "load on" and "load off".

To correct the error:

a. Press "Clear".

b. Review the entire day's schedule to determine what changes are needed.

c. Eliminate the undesired "load on" or "load off" time. (Review the steps illustrated in Figure 11.)

d. Program a new "load on" or "load off" time, as appropriate.

[ ] Last mode changeover entry made cannot be accepted because that day's schedule is already full. Remember that only 2 "on" and 2 "off" times can be entered per day.

To correct the error:

a. Press "Clear".

b. Review the entire day's schedule to determine what changes are required.

c. Delete the undesired "load on" or "load off" time(s). (Review the steps illustrated in Figure 11.)

d. If applicable, program new "on" and "off" times as desired.

Maintenance Requirements

To assure that the time clock's battery backup is always fully operational, check battery output on a regular basis. Replace the battery whenever the measured output falls below 8.2 VDC, or at least semiannually. Be sure to use a 9-volt, alkaline, nonrechargeable-type battery. (It is not necessary to interrupt the remote panel's power supply for battery changeout.)

Note: Since the clock must be reset anyway, you may want to schedule battery changeouts when the time changes from Standard to Daylight Savings Time, and back again.

In the event that the remote NSB panel malfunctions, perform the checkout procedure described under "Remote Panel Start-Up and Checkout". If necessary, contact a qualified service organization to ensure proper diagnosis and equipment repair.

Table 2
Comparison of Occupied/Unoccupied Modes in Constant Volume and VAV Control Systems

Operating Mode	Operating Mode Characteristics	
	Constant Volume Systems	VAV Systems
Occupied Mode (Daytime or "Load On")	1. With the system switch at "Auto", unit cools or heats as required to maintain the control setpoint set at the room thermostat installed in the controlled space.	1. Unit cooling section cycles on as required to maintain discharge air setpoint established at the discharge air controller in the unit control panel. Heating cycle operation is locked out during this mode.
	2. Supply fan runs continuously when the NSB panel's system switch is set at either "Auto" or "Cool", and the fan switch is set at "Auto". If the system switch is set at "Heat", the supply fan cycles on and off with the unit's heating section. (See the note below.)	2. Supply fan runs continuously as long as the NSB panel's system switch is set at "Auto".
Unoccupied Mode (Night Setback or "Load Off")	1. With the system switch set at either "Auto" or "Heat", cooling is locked out.	1. Cooling cycle operation is locked out.
	2. Unit's heating section cycles on and off as required to maintain the lower NSB heating setpoint.	2. Unit's heating section cycles on and off to maintain the lower NSB heating setpoint.
	3. "NSB heating setpoint" is the occupied heating setpoint minus the heat setback value set at the NSB panel.	3. "NSB heating setpoint" is established at a NSB thermostat installed in the controlled space.
	4. Unit supply fan cycles on and off with the unit's heating section. During the NSB mode, fan switch position is ignored.	4. Unit supply fan cycles on and off with the unit's heating section.
Morning Warm-Up Mode	This term is not really applicable for constant volume systems. As soon as the "occupied" mode begins, the resistors (heat setback switch) that lowered the daytime setpoint for NSB operation are switched out of the control circuit, and the unit will heat (or cool) as required to satisfy the daytime setpoint.	Morning warm-up is only available if the optional, "fast morning warm-up thermostat" is installed in the controlled space. "Morning warm-up" begins when the NSB panel's time clock initiates the changeover from "load off" to "load on". (In other words, it is the transitional mode between NSB and daytime operation.) During morning warm-up, cooling cycle operation is locked out until the setpoint established at a dedicated morning warm-up thermostat (installed in the controlled space) is satisfied. The unit's supply fan runs continuously during this mode. (Continuous supply fan operation begins as soon as the time clock initiates the "load on" mode and stops at changeover to the "load off" mode. See "Unoccupied Mode".)

Note: If the fan switch (constant volume panels only) is set at "On", the unit's supply fan will run continuously--regardless of system switch position--during the daytime ("occupied") mode.

S*HE Units Only

Revised S*HE Electrical Data

Use the electrical data shown below in place of Table 2 on page 17 of SXHE-IOM-1A.

Table 3
Electrical Service Sizing Data for 90- and 105-Ton S*HE Units

Unit Component(s)	200/60/3, Nominal		230/60/3, Nominal		460/60/3, Nominal		575/60/3, Nominal	
	RLA	LRA (1)	RLA	LRA (1)	RLA	LRA (1)	RLA	LRA (1)
Compressor (2):								
S*HE-C90, per 40T ckt.	170	430/729	148	375/631	74	188/315	59	150/245
S*HE-D11, per 40T ckt.	170	430/729	148	375/631	74	188/315	59	150/245
per 50T ckt.	198	550/910	172	480/792	86	240/396	69	190/315
	Total FLA (3)		Total FLA (3)		Total FLA (3)		Total FLA (3)	
Condenser Fans:								
S*HE-C90, 8 fans	32.8		28.8		14.4		11.2	
S*HE-D11, 9 fans	36.9		32.4		16.2		12.6	
	FLA per Motor		FLA per Motor		FLA per Motor		FLA per Motor	
Supply Fan Motor Horsepower:								
30 Hp (2 15-Hp)	48.3		42.0		21.0		17.0	
40 Hp (2 20-Hp)	62.1		54.0		27.0		22.0	
50 Hp (2 25-Hp)	78.2		68.0		34.0		27.0	
60 Hp (2 30-Hp)	92.0		80.0		40.0		32.0	
80 Hp (2 40-Hp)	119.6		104.0		52.0		41.0	
	Total FLA		Total FLA		Total FLA		Total FLA	
Exhaust Fan Motor Horsepower (1 Fan per Unit):								
1 15-Hp	48.3		42.0		21.0		17.0	
1 20-Hp	62.1		54.0		27.0		22.0	
1 25-Hp	78.2		68.0		34.0		27.0	
1 30-Hp	92.0		80.0		40.0		32.0	
1 40-Hp	119.6		104.0		52.0		41.0	
	Total FLA (4)		Total FLA (4)		Total FLA (4)		Total FLA (4)	
Electric Heat (SEHE Only):								
190 Kw	n/a		n/a		228.5		182.8	
	Total FLA		Total FLA		Total FLA		Total FLA	
Combustion Blower Motor (SFHE Only):								
1000 MBh	2.8		2.4		1.2		1.0	

Notes:

1. "Locked rotor amp" values (LRA) shown are for part-winding (PWS) and across-the-line (XL) start, respectively. PWS is standard on 200V, 230V and 575V applications; 460V units are available in either PWS or XL.

2. "Rated load amp" (RLA) and LRA values indicated are per compressor. Ninety-ton S*HE units use 2 40-ton, Model R compressors; 105-ton units also use 2 Model R compressors--1 40-ton and 1 50-ton.

3. As indicated above, 90-ton units use 8 condenser fans, while 9 condenser fans are used on 105-ton units. "Full load amp" (FLA) values shown represent the total condenser fan FLA for the unit.

4. FLA values shown for the SEHE electric heat section were determined at 480 and 600 volts, respectively.

For further information on this product or other Trane products, refer to the "Trane Service Literature Catalog", ordering number IDX-IOM-1. This catalog contains listings and prices for all service literature sold by Trane. The catalog may be ordered by sending a $20.00 check to: The Trane Company, Service Literature Sales, 3600 Pammel Creek Road, La Crosse, WI 54601.

PRINTED BY PRODUCTION SERVICES — LA CROSSE BB /LW

458

Operation Maintenance

VAV-M-2A

Library	Service Literature
Product Section	Terminal Devices/Ht.Prod
Product	Variable Air Volume Units
Model	VariTrane
Literature Type	Operation - Maintenance
Sequence	2A
Date	December, 1985
File No.	SV-TD-VAV-VAV-M-2A-1285
Supersedes	VAV-M-2 - August, 1984

VariTrane Systems Variable Air Volume Units

Series Fan-Powered Control Units With Pneumatic and Electric Control

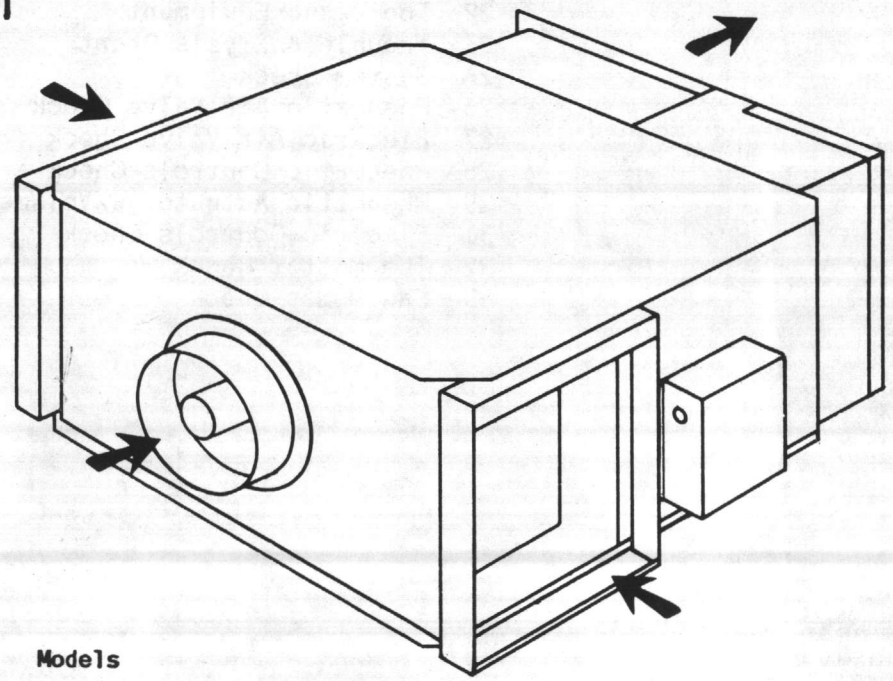

Models

VSCC - Cooling Control Unit
VSEC - Control Unit w/Auxiliary Electric Heat Coil

Sizes 04-04 - 20-20

Since The Trane Company has a policy of continuous product improvement, it reserves the right to change specifications and design without notice. The installation and servicing of the equipment referred to in this booklet should be done by qualified, experienced technicians.

Table of Contents

3 **Unit Model Number Description**
3 VSCC Units
4 VSEC Units

6 **General Information**
6 Literature Change History
6 General Unit Information

7 **Operation**
7 Control Unit
7 Pneumatic Air Valve
8 Electric Air Valve
9 Fan
11 Pneumatic Controls
13 --Pneumatic Volume Regulator
13 --Duct Pressure Switch
13 Electric Control
13 Flow Ring
14 Electric Heat Coils

15 **Maintenance**
15 Adjustments
15 --Pneumatic Controls VCV 2200
16 --Pneumatic Controls VCV 2500
19 --Position Potentiometer

22 **Trouble Analysis**
22 Tools and Equipment
23 Trouble Analysis Chart
23 System Check
26 Pneumatic Air Valve Check
27 Electric Air Valve Check
28 Pneumatic Controls Check
29 Pneumatic Actuator w/Volume Regulator (VCV 2500)
31 Electric Controls Check
32 Thermostat Check
33 Fan Motor Check

The Trane Company
La Crosse, Wisconsin 54601-7599
Printed in U.S.A.

©American Standard Inc. 1985

Unit Model Number Description

Trane products are identified by a multiple character model number that precisely identifies a particular type of unit. An explanation of the alphanumeric model number is shown below. It will enable the owner or Service Engineer to define operation, components and accessories.

Model Number	VSC	C	08	07	E	A	L	E	G	0	0	U	A	1	A
Digit Number	1,2,3	4	5,6	7,8	9	10	11	12	13	14	15	16	17	18	19

Digits 1,2, 3
Product Type
V = VariTrane
S = Series Fan-Powered
C = Cooling

Digit 4
Development Sequence

Digit 5,6
Valve Size
04 = 400 CFM
08 = 800 CFM
12 = 1200 CFM
20 = 2000 CFM

Digit 7,8
Fan Size
04 = 400 CFM
07 = 700 CFM
11 = 1100 CFM
15 = 1500 CFM
20 = 2000 CFM

Digit 9
Valve Control
A = Pneumatic Actuator
E = Pneumatic Actuator W/Volume Regulator
K = Electrical Actuator W/Position Feedback
S = Special

Digit 10
Design Sequence

Digit 11
Fan Motor Voltage
L = 115V
H = 277V

Digit 12
Agency Listing
0 = Without
E = ETL (Electrical Test Lab)
C = COCC (City of Chicago)
S = Special

Digit 13
Duct Connection
G = Flanged
D = Slip & Drive

Digit 14
Pressure Tap To Power Aspirating T-Stat Housing
0 = Without
1 = With

Digit 15
Accessories
0 = None
1 = Filter(s)

Digit 16
Accessory Volume Control Vendor
0 = None
U = Universal
T = Trane
S = Special

Digit 17
Fan Energization
A = Duct Pressure Switch (Pneu)
B = Pneumatic Main Air Interlock (Pneu)
C = Duct Pressure Switch or T-Stat Controlled P.E. (Pneu)
D = Remote Controlled Relay (Elec)
E = Remote Controlled Relay or T-Stat Controlled P.E. (Pneu)
F = Duct Pressure Switch (Elec)
G = Remote Controlled Relay or T-Stat Controlled Relay (Elec)
S = Special

Digit 18
Plenum Air Inlet
1 = Sides
2 = Top
S = Special

Digit 19
Fan Speed Control
A = Without
B = 3-Speed Switch
S = Special

Model Number	VSE	C	08	07	E	A	A	4	090	4	Continued On Next Page
Digit Number	1,2,3	4	5,6	7,8	9	10	11	12	13,14,15	16	

Digits 1, 2, 3
Product Type
V = VariTrane
S = Series Fan-Powered
E = Electric Heat

Digit 4
Development Sequence

Digit 5, 6
Valve Size
04 = 400 CFM
08 = 800 CFM
12 = 1200 CFM
20 = 2000 CFM

Digit 7, 8
Fan Size
04 = 400 CFM
07 = 700 CFM
11 = 1100 CFM
15 = 1500 CFM
20 = 2000 CFM

Digit 9
Valve Control
A = Pneumatic Actuator
E = Pneumatic Control w/Volume Regulator
K = Electric Actuator W/Position Feedback
S = Special

Digit 10
Design Sequence

Digit 11
Heater Voltage
A = 208/60/3 (Balanced Resistive Loads)
B = 208/60/3 (Unbalanced Resistive Loads)
C = 240/60/1
D = 277/60/1
E = 480/60/3 (Balanced Resistive Loads)
F = 480/60/3 (Unbalanced Resistive Loads)
G = 480/60/1
H = 208/60/1
J = 240/60/3 (Balanced Resistive Loads)
K = 240/60/3 (Unbalanced Restrictive Loads)
S = Special

Digit 12
Heater Stages
1 = 1 Stage
2 = 2 Stage (Equal KW/Stage)
3 = 2 Stage (Unequal KW/Stage)
4 = 3 Stage (Equal KW/Stage)
S = Special

Digit 13, 14, 15
Heater KW X 10

Digit 16
Heater Energization
1 = 24V Magnetic Contactor(s)
2 = 24V Mercury Contactor(s)
4 = PE Switch W/Magnetic Contactor(s) When Required
5 = PE Switch W/Mercury Contactor(s) When Required
S = Special

Model Number	D	0	D	E	G	0	0	U	A	0	A	1	A
Digit Number	17	18	19	20	21	22	23	24	25	26	27	28	29

Digit 17
Heater Disconnect Switch
0 = Without
D = With
S = Special

Digit 18
Heater Line Fuses
0 = Without
F = With
S = Special

Digit 19
Dust Tight Enclosure
0 = Without
D = With
S = Special

Digit 20
Agency Listing
0 = Without
E = ETL (Electrical Test Lab)
C = COCC (City of Chicago)
S = Special

Digit 21
Heater Duct Connection
G = Flanged
D = Slip & Drive
S = Special

Digit 22
Pressure Tap To Power Aspirating T-Stat Housing
0 = Without
1 = With

Digit 23
Accessories
0 = None
1 = Filters
S = Special

Digit 24
Accessory Volume Control Vendor
0 = None
U = Universal
T = Trane
S = Special

Digit 25
Fan Energization
A = Duct Pressure Switch or Pneumatic Main Air Interlock (Pneu)
B = Pneumatic Main Air Interlock (Pneu)
C = Duct Pressure Switch or T-Stat Controlled P.E. (Pneu)
D = Remote Controlled Relay (Elec)
E = Remote Controlled Relay or T-Stat Controlled P.E. (Pneu)
F = Duct Pressure Switch (Elec)
G = Remote Controlled Relay or T-Stat Controlled Relay (Elec)
S = Special

Digit 26
Heater Specifications
0 = Standard
S = Special

Digit 27
Heater Airflow Switch
0 = Without
A = With
S = Special

Digit 28
Plenum Air Inlet
1 = Sides
2 = Top
S = Special

Digit 29
Fan Speed Control
A = Without
B = 3-Speed Switch
S = Special

General Information

Literature Change History

VAV-M-2A (December 1985)

Cooling and electric heat control units. Model number changes, added Staefa 2500 (PVR) and three-speed switch. All units of "A" design.

General Unit Information

Series fan-powered cooling and electric heat VariTrane units are pneumatically and electrically controlled shutoff air valves for primary air requirements of 2000 cfm or less.

On cooling-only units (VSCC), the air circulation through the zone is maintained by the control unit fan when primary air from the central system is restricted or shut off. Also, cooling-only units (VSCC), can satisfy a small net heating load because return or plenum air, used by the unit fan, is typically warmer than the room itself due to convection and the heat of lights.

On electric heat-only units (VSEC), modulated supply air can be combined with warm return air to maintain sufficient air circulation. The electric heat coil provides additional heating.

Operation

Control Unit

Constant temperature supply air, regardless of the heating or cooling demand, is delivered to the unit through the modulating air valve. All series fan-powered VariTrane systems are equipped with shutoff air valves. See Figure 1.

On a call for cooling, the room thermostat modulates the air valve to provide more or less conditioned air to the inlet of the fan. The fan draws in the conditioned air along with some plenum air to deliver a relatively constant volume but variably tempered cool air to the space.

On a call for heating, the air valve modulates to a minimum or fully closed position. The fan then draws in plenum air to heat the space. If additional heat is required, an electrical coil is energized (based on a continued fall in space temperature).

Pneumatic Air Valve

The pneumatically controlled air valve is operated by a pneumatic signal (between 5 and 10 psi on all sizes except size 20 which has a signal range of 4 to 9 psi) received from the thermostat or volume regulator. Figure 2 illustrates pneumatic valve components.

An expandable bladder is attached to the plastic end cap, which in turn is attached to the outer casing of the damper actuator. When air pressure is fed into the air valve through the center core, the bladder fills and expands, forcing the outer casing and damper assembly along the inner core, in the direction of airflow, and blocking off the discharge air slots.

At a decreasing pneumatic signal, air is bled from the bladder and the return spring pushes the outer casing and damper assembly to the rear of the valve, opening the discharge slots. Pneumatic air valves applied with series fan-powered units are normally open.

Figure 1
Exploded View of
Shutoff Air Valve

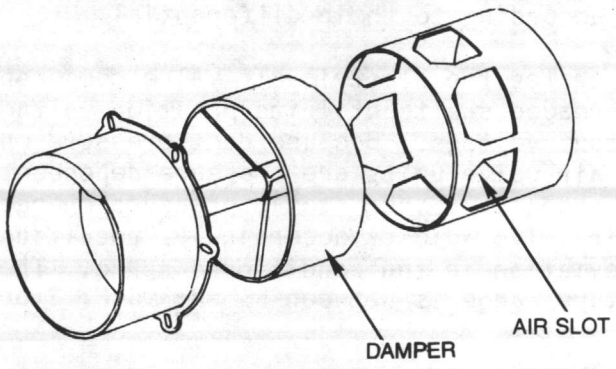

Figure 2
Pneumatic Air Valve Components

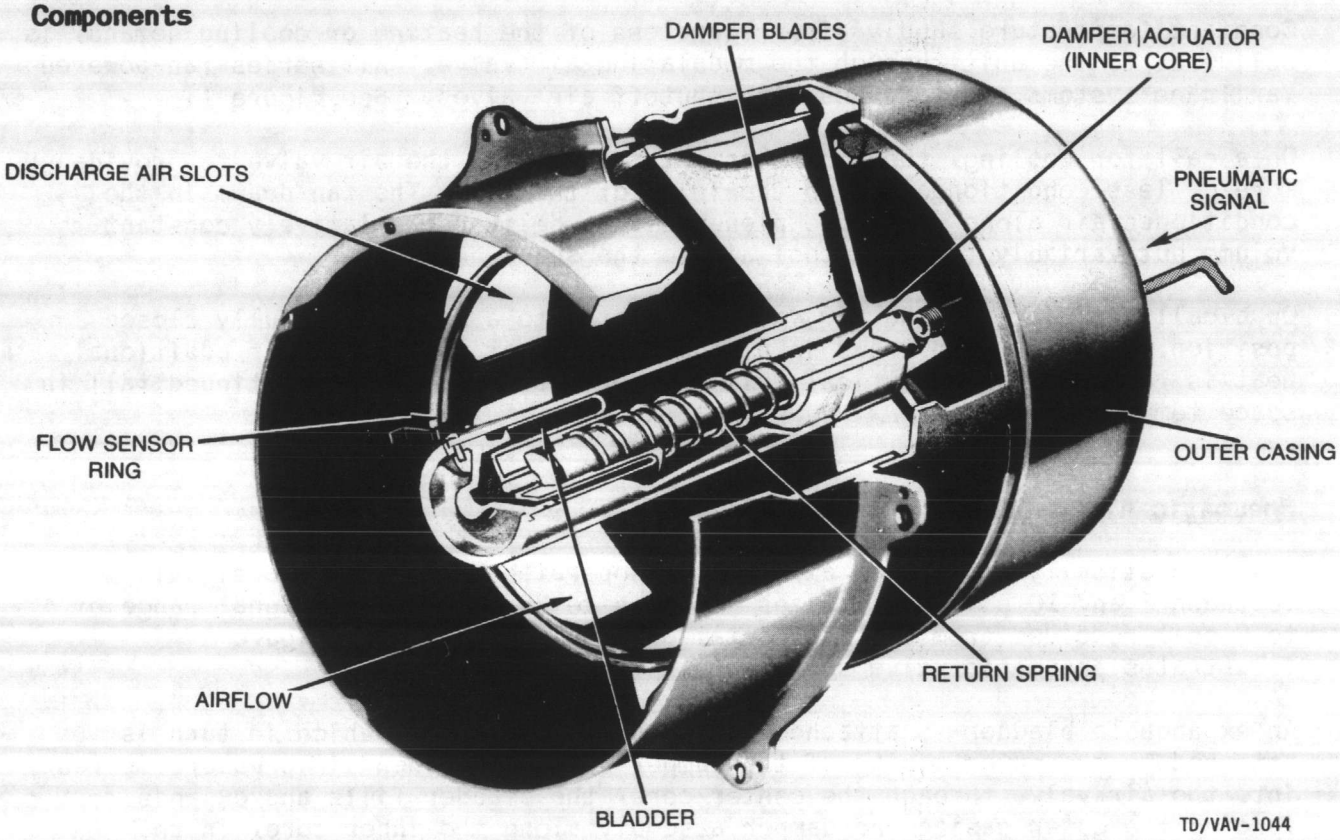

Electric Air Valve

The electric air valve modulates airflow by a 24-volt, reversible synchronous, and damper-positioning motor. Damper position is measured by a position potentiometer located on the motor bracket of the air valve. An electronic circuit board, located on the side of the control unit, compares the thermostat output voltage with the damper position potentiometer voltage and directs the motor to move according to their differential.

Figure 3 illustrates the electric air valve components. The damper assembly is driven by a threaded shaft until its position voltage balances with the thermostat output voltage. Because duct pressure changes may affect delivered cfm, electric air valve units are pressure-dependent and will not compensate for duct pressure changes. Since static pressure changes generally take place slowly, the air valve adjusts accordingly, resulting in virtually unnoticed temperature deviation in the conditioned space. The intended ambient operating temperature range is between 55 and 90 F. Storage temperature range is -40 to 150 F.

Figure 3
Electric Air Valve Components

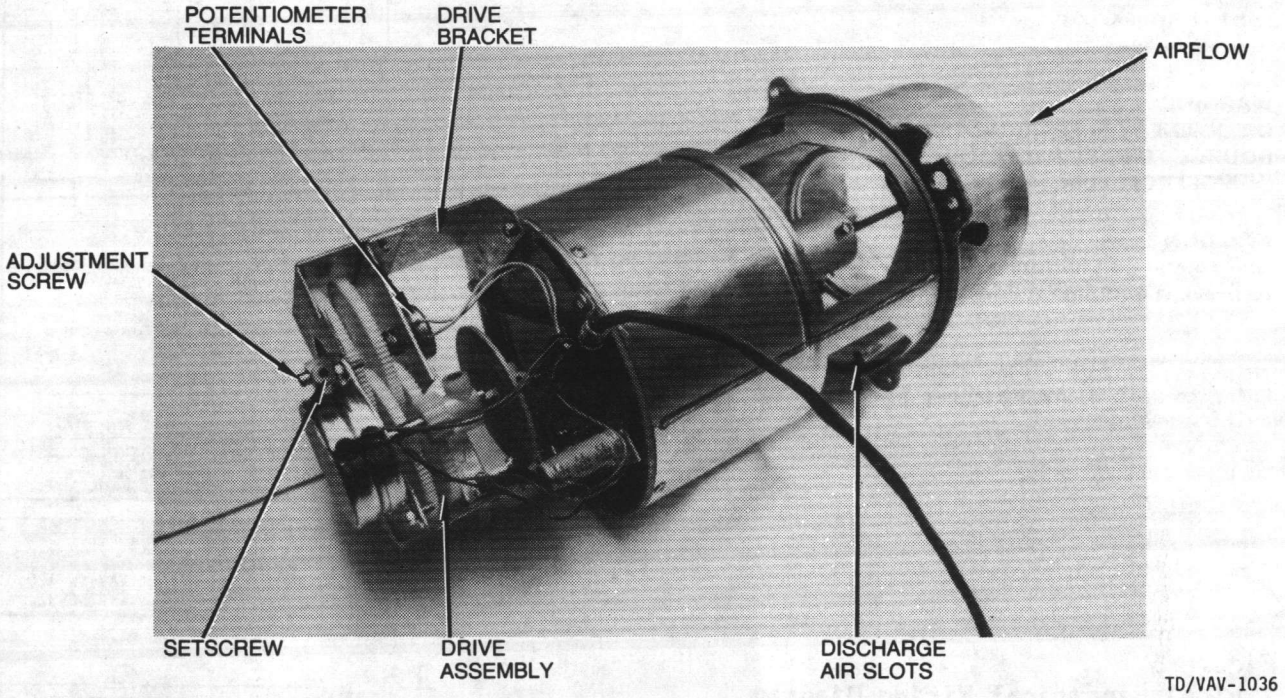

Fan

The fan in series fan-powered VariTrane units is a centrifugal, forward-curved type available in 400 to 2000-cfm capabilities.

Plenum air is brought in through filters, directly from the plenum. The warm air enters the center of the fan wheel and is forced through the blades and out the discharge, through the backdraft damper and into the discharge plenum box.

The electric fan motor is a three-speed, permanent split-capacitor type, available in 115 and 277 voltages.

Motors are designed for a maximum of a 60 C (108 F) temperature rise to ensure long motor life. The intended ambient operating temperature range is between 55 and 90 F. Storage temperature range is -40 to 150 F.

Figure 4 illustrates typical supply power wiring and electrical wiring from the duct pressure switch to the fan motor on pneumatically controlled units with electric heat. When (in Night Setback) the PE switch is activated by a 12 psi signal, power is sent to the 115V fan motor.

Figure 5 illustrates similar wiring for these units with a 277V fan motor. On these motors, the high speed winding is separated from the low and medium speed windings when the fan is running on high speed.

Figure 4
Typical Electrical Wiring Diagram for Model VSEC Electric Heat Units with Pneumatic Control and 115V Fan Motor

WARNING
DISCONNECT ELECTRICAL POWER SOURCE TO PREVENT INJURY OR DEATH FROM ELECTRICAL SHOCK

CAUTION
Use copper conductors only to prevent equipment damage

This is a typical wiring diagram. Refer to unit mounted diagram for unit connections.

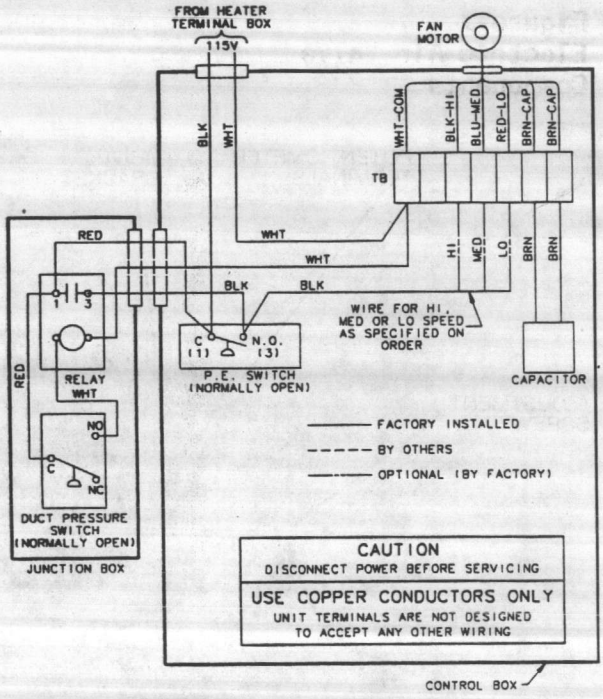

VAV-SW-420.01
X39730531

Figure 5
Typical Electrical Wiring Diagram for Model VSEC Electric Heat Units with Pneumatic Control and 277V Fan Motor

WARNING
DISCONNECT ELECTRICAL POWER SOURCE TO PREVENT INJURY OR DEATH FROM ELECTRICAL SHOCK

CAUTION
Use copper conductors only to prevent equipment damage

This is a typical wiring diagram. Refer to unit mounted diagram for unit connections.

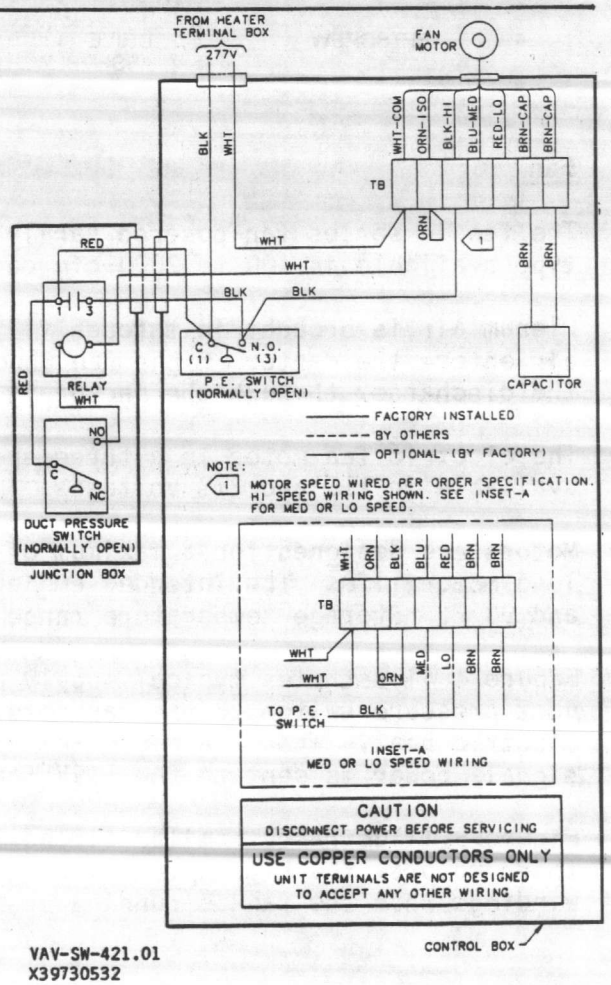

VAV-SW-421.01
X39730532

When operating at high speed, the orange wire is not connected and the black wire from the PE switch is connected to the black motor lead. The inset of Figure 5 shows low and medium speed connections. The orange wire is connected to the black motor wire. The black PE switch wire is connected to either the blue motor wire for medium speed or the red motor wire for low speed.

Pneumatic Controls

Zone temperature is relayed to the normally-open unit by a pneumatic thermostat. A pneumatic signal from the thermostat is sent to the valve, fan PE switch and electric heat coil PE switch. Typically, a decrease in room temperature increases the pressure output of the thermostat. When thermostat pressure reaches 5 psi, the valve begins to close. At 10 psi, the air valve closes. At 14 psi the first stage of electric heat is energized. For the operational sequence of units with a pneumatic volume regulator, see Table 1. Refer to Figures 6 and 7 for typical piping diagrams.

Pneumatic Volume Regulator

The pneumatic volume regulator (PVR) is a regulating controller that maintains desired airflow regardless of changing system static pressure.

The PVR receives a pressure differential signal (delta P) from the flow sensors in the air valve inlet and alters its output signal according to the static pressure fluctuations. The altered signal repositions the valve damper to deliver only the cfm called for by the thermostat signal. Minimum and maximum cfm settings are factory-calibrated and are field-adjustable. A reversing relay may be used with the PVR to alter the thermostat signal sent to the volume regulator. See the Maintenance section of this manual for adjustment procedures.

Table 1
Typical Sequential Operation
for VariTrane Units with
Pneumatic Volume Regulators

Input From Thermostat	Unit Operation
5 psi	Air valve is at maximum flow position. All PE switches are open.
8 psi	Air valve is modulating. All PE switches are open.
10 psi	Air valve is at minimum flow or closed. All PE switches are open.
12 psi	Air valve is at minimum flow or closed. Fan PE switch is closed, fan is energized.
14 psi	Air valve is at minimum flow or closed. Fan PE switch is closed, VAV fan is energized. Heat coil PE switch is closed for first stage of heating.
15-1/2 psi	Heat coil PE switch is closed for second stage of heating.
17 psi	Heat coil PE switch is closed for third stage of heating.

Figure 6
Typical Model VSEC Pneumatic Piping Diagram for Units with Pneumatic Control, Remote Mounted Thermostat, P.E. Switch and Pneumatic Volume Regulator

WARNING
DISCONNECT ELECTRICAL POWER SOURCE TO PREVENT INJURY OR DEATH FROM ELECTRICAL SHOCK

CAUTION
Use copper conductors only to prevent equipment damage

This is a typical wiring diagram. Refer to unit mounted diagram for unit connections.

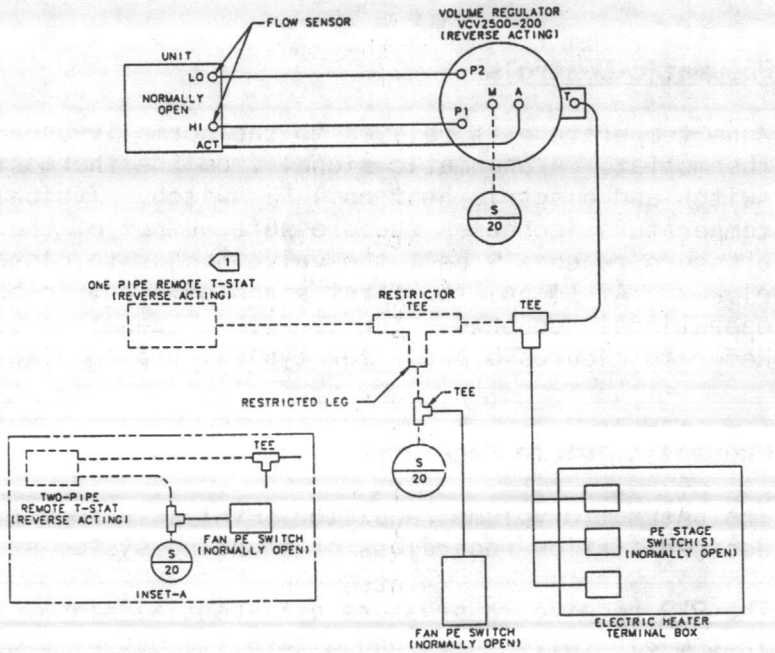

NOTE:

1 ONE-PIPE THERMOSTAT SHOWN, SEE INSET-A FOR TWO-PIPE THERMOSTAT

——— FACTORY INSTALLED

- - - - - - - - - - - INSTALLED BY OTHERS

VAV-SA-419.02
X39730595-29

Figure 7
Typical Model VSEC Pneumatic Piping Diagram for Units with Pneumatic Control, Remote Mounted Thermostat Duct Pressure Switch, and Pneumatic Volume Regulator.

WARNING
DISCONNECT ELECTRICAL POWER SOURCE TO PREVENT INJURY OR DEATH FROM ELECTRICAL SHOCK

CAUTION
Use copper conductors only to prevent equipment damage

This is a typical wiring diagram. Refer to unit mounted diagram for unit connections.

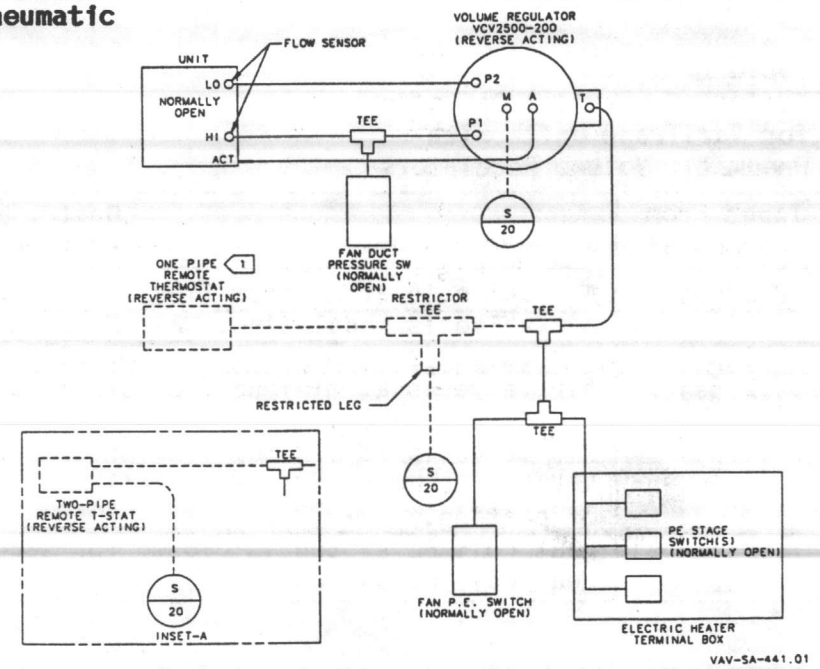

NOTE:

1 ONE-PIPE THERMOSTAT SHOWN, SEE INSET-A FOR TWO-PIPE THERMOSTAT

——— FACTORY INSTALLED

- - - - - - - - - - - INSTALLED BY OTHERS

VAV-SA-441.01
X39730595-33

Duct Pressure Switch

The duct pressure switch is used to close and energize the fan PE switch whenever a minimum pressure is sensed at the box inlet. This ensures that the fan runs whenever there is a minimum pressure in the duct.

Electric Control

Zone temperature is relayed to the unit with an electric thermostat. The thermostat is a voltage-divider circuit with a temperature-dependent thermistor, which causes the thermostat output voltage to vary with zone temperature change. This thermistor DC signal is transmitted to terminal 4 of the electronic circuit board and causes the circuit board to position the damper actuator based on deviation from the setpoint. VariTrane units with electric controls are pressure dependent and will not compensate airflow (cfm) with varying system static pressure.

As the zone cools, the electric air valve closes off its discharge slots completely or to its minimum open position. When the temperature sensed by the thermostat is approximately 3/4 F to 1 F less than temperature needed to close the valve completely, contact K1 will close and activate the fan motor. When the temperature sensed by the thermostat is approximately 2 F less than the temperature needed to close the valve completely, contact K2 closes to activate the first stage of heating. At a further zone temperature decrease, contact K3 closes to activate the second stage of heating.

Flow Ring

The flow ring in fan-powered VariTrane air valves through size 20, is a ring of tubing located in the valve inlet, as shown in Figure 8.

Figure 8
Ring-Type Flow Sensor
(Valve Sizes 4 thru 20)

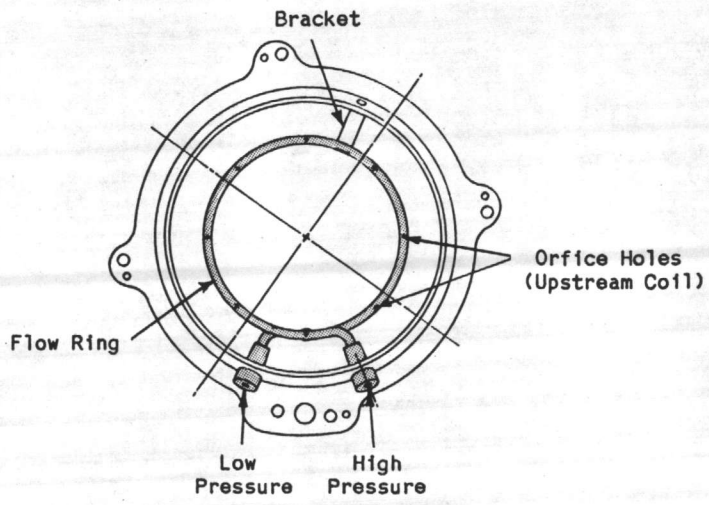

The sensing coil provides an airflow monitor for servicing the unit when used with a manometer or magnehelic gauge, and a calibration chart of flow signal (Delta P) versus airflow (cfm). On units supplied with volume regulators, flow sensors continuously monitor airflow, regardless of static pressure changes, for accurate air delivery.

Evenly spaced orifices in the upstream coil are high pressure taps that measure total pressure through the coil. The orifices in the downstream ring are low pressure taps that measure airflow passing by the flow ring where pressure is less than actual static pressure. High and low pressure areas are separated with a crimp.

The difference between these two measurements is determined by the cfm passing through the air valve based on static pressure in the ductwork. The pressure differential reading is thus a magnified velocity pressure reading that is greater than actual static pressure. The pressure differential signal is relayed to the volume regulator, which positions the valve dampers in response to the thermostat signal and actual static pressure.

The multiple, evenly spaced orifices in the flow ring provide measurement accuracy despite ductwork turns or variations before the unit inlet. For the most accurate readings, however, there should be a minimum of two duct diameters of straight run ductwork before the unit inlet connection.

Electric Heat Coils

For electric control, heater stages are activated only after the air valve is closed (or at its minimum position) and the plenum air fan is running. The fan remains in operation with the heater. Electric heat coils are activated in stages by closing contacts on the electronic circuit board. Stages occur at temperature increments of 1.5 F.

Maintenance

Periodic maintenance of the Model VSCC and VSEC of the heat unit is minimal, but necessary for efficient operation. Routine maintenance consists of oiling the fan motor and inspecting the filters.

Motors need no lubrication for normal life. Oil tubes are provided. Use No. 10 non-detergent oil and do not oil more frequently than once each 6 months.

If a filter is provided at the fan inlets, inspect or replace the filter every 6 months. A clean filter is necessary to maintain proper air pressure and airflow.

WARNING: DISCONNECT POWER SOURCE AND ALLOW ALL ROTATING PARTS TO STOP COMPLETELY BEFORE SERVICING THE FAN-POWERED VARITRANE. FAILURE TO DO SO MAY RESULT IN INJURY OR DEATH FROM ELECTRICAL SHOCK OR MOVING PARTS.

While performing the preceding checks, it is recommended that the following checks are also made to prevent minor problems from creating larger ones.

1. Inspect electrical connections to be sure that they are secure.
2. Inspect surrounding ductwork for leakage or unnecessary movement.
3. Modulate the thermostat control to verify proper control and air valve operation. Check air temperature with a separate thermometer.
4. Ensure that the fan and heat coils activate according to their PE switch settings.
5. Clear the fan housing and air valve casing of any debris that might obstruct fan blade or valve damper travel.
6. Inspect pneumatic tubing for cracks or leaky connections and replace as necessary.

Adjustments

Volume Regulator Adjustment
Staefa VCV 2200 and 2500

Pneumatic Controls VCV 2200--If the volume regulator needs recalibration, adjust the pneumatic volume regulator with the following procedures:

1. Note the flow diagram on the side of the regulator cap and record the proper pressure differential for unit cfm. Remove the volume regulator cap.
2. Disconnect the thermostat line from the controller and attach a hand pump with a 0-20 psi gauge. Pump until an input pressure of approximately 15 psi is obtained.
3. The minimum airflow can be adjusted by moving the plastic slider by hand or with a small screwdriver. See Figure 9. Moving the slider in the direction of "INCREASE" will increase the minimum airflow delivered by the VariTrane unit.

Figure 9
Pneumatic Volume Regulator (VCV 2200)

4. Monitor the pressure differential signal and adjust the maximum airflow by hand or with a small screwdriver. See Figure 9. Moving the slider in the direction of "INCREASE" will increase the maximum airflow delivered by the VariTrane unit.

5. Check operation at an intermediate point and repeat the check before removing gauges.

Pneumatic Controls VCV 2500--If the volume regulator needs recalibration, adjust the pneumatic volume regulator (PVR) according to the following configuration procedures:

Note: VCV 2500 (PVR) is available in four different functional configurations. To ensure correct calibration procedures, match the colored label (blue, red, green or white) on the PVR with the selected configuration procedures listed below.

The first three steps are common to all configurations.

1. Remove the caps on the series tees which connect the flow sensor to the volume regulator. Connect a 0-1" magnehelic gauge to monitor flow sensor Delta P. The higher pressure port is the farthest upstream on the inlet.

2. Remove the thermostat line and connect a hand pump with a 0-20 psi gauge to Port "T".

CAUTION: The volume regulator has barbed plastic fittings on ports "T", "M", and "A". It is important not to damage these ports when disconnecting and connecting tubes. Most tubing will not pull off easily and may have to be partially cut. Take care not to cut into the plastic port.

3. Tee a 0-20 psi gauge in the line from Port "A" on the volume regulator to the air valve actuator. See Figure 10.

Go to the appropriate adjustment instructions for the volume regulator model being calibrated.

VCV 2500-100--(White Label)--Normally-open air valve and direct-acting thermostat when in the cooling mode. See Figure 10.

4. Set Port "T" input at 4 psi with hand pump.

5. Monitor Delta P and adjust minimum flow with knob "A".

6. Set Port "T" input at 16 psi with hand pump.

7. Monitor Delta P and adjust maximum flow with knob "B". If actuator pressure is less than 5 psi, the air valve is wide open and duct pressure must increase to increase flow.

8. Set Port "T" input back to 4 psi with hand pump.

9. Monitor minimum flow Delta P. If not correct, adjust knob "A".

10 The thermostat pressure range can be adjusted using knob "C". By adjusting knob "C", the thermostat pressure range can be adjusted to operate from 5-10 psi up to 10-15 psi. Monitor Delta P and Port "T" pressure. Note the pressure at which flow begins to increase and the pressure at which flow is at the maximum.

VAV 2500-200--(Red Label)--Normally-open air valve and reverse-acting thermostat when in the cooling mode. See Figure 10.

4. Set Port "T" input at 16 psi with hand pump.

5. Monitor Delta P and adjust minimum flow with knob "A".

6. Set Port "T" input at 4 psi with hand pump.

7. Monitor Delta P and adjust maximum flow with knob "B". If actuator pressure is less than 5 psi, the air valve is wide open and duct pressure must increase to increase flow.

8. Set Port "T" input back to 16 psi with hand pump.

9. Monitor minimum flow Delta P. If not correct, adjust knob "A".

10. The thermostat pressure range can be adjusted using knob "C". By adjusting knob "C", the thermostat pressure range can be adjusted to operate from 5-10 psi up to 10-15 psi. Monitor Delta P and Port "T" pressure. Note the pressure at which flow begins to increase and the pressure at which flow is at the minimum.

Figure 10
Pneumatic Volume Regulator
(VCV 2500-100, 200, 300, 400)

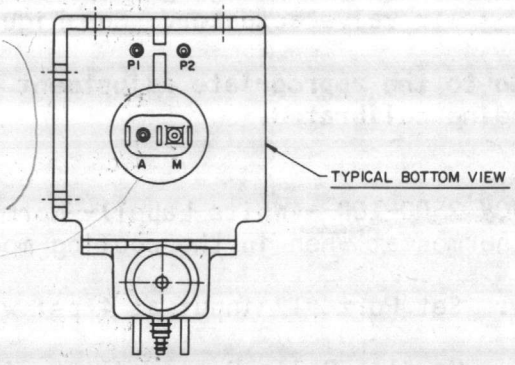

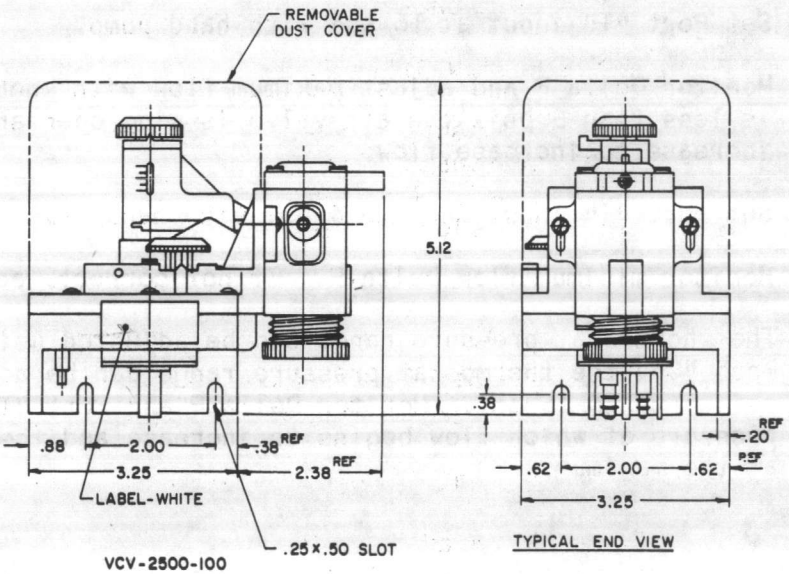

VCV-2500-100

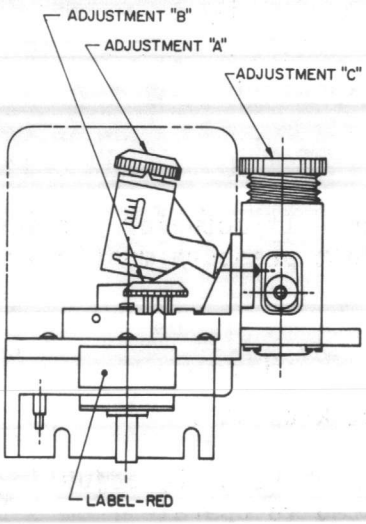

VCV-2500-200

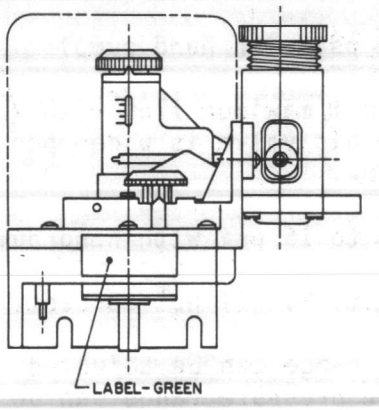

VCV-2500-300

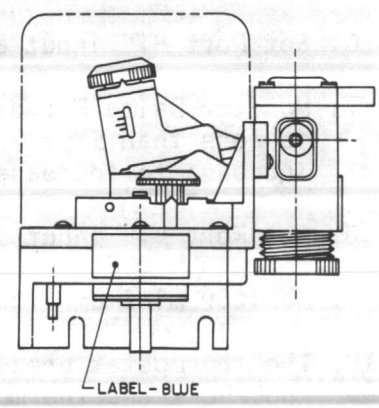

VCV-2500-400

VAV 2500-300--(Green Label)--Normally-closed air valve and direct-acting thermostat when in the cooling mode. See Figure 10.

4. Set Port "T" input at 4 psi with hand pump.

5. Monitor Delta P and adjust minimum flow with knob "A".

6. Set Port "T" input at 16 psi with hand pump.

7. Monitor Delta P and adjust maximum flow with knob "B". If actuator pressure is greater than 12 psi, the air valve is wide open and duct pressure must increase to increase flow.

8. Set Port "T" input back to 4 psi with hand pump.

9. Monitor minimum flow Delta P. If not correct, adjust knob "A".

10. The thermostat pressure range can be adjusted using knob "C". By adjusting knob "C", the thermostat pressure range can be adjusted to operate from 5-10 psi up to 10-15 psi. Monitor Delta P and Port "T" pressure. Note the pressure at which flow begins to increase and the pressure at which flow is at the maximum.

VCV 2500-400--(Blue Label)--Normally-closed air valve and reverse-acting thermostat when in the cooling mode. See Figure 10.

4. Set Port "T" input at 16 psi with hand pump.

5. Monitor Delta P and adjust minimum flow with knob "A".

6. Set Port "T" input at 4 psi with hand pump.

7. Monitor Delta P and adjust maximum flow with knob "B". If actuator pressure is less than 12 psi, the air valve is wide open and duct pressure must increase to increase flow.

8. Set Port "T" input back to 16 psi with hand pump.

9. Monitor minimum flow Delta P. If not correct, adjust knob "A".

10. The thermostat pressure range can be adjusted using knob "C". By adjusting knob "C", the thermostat pressure range can be adjusted to operate from 5-10 psi up to 10-15 psi. Monitor Delta P and Port "T" pressure. Note the pressure at which flow begins to decrease and the pressure at which flow is at the minimum.

Position Potentiometer Adjustment

Electric Controls--Adjust potentiometer per the following:

1. Loosen the allen-head setscrew on the potentiometer shaft. See Figure 11.

2. Connect an ohmmeter across the potentiometer terminals. See Figure 12. The reading will indicate the resistance of the potentiometer according to the position of the air valve. A full-open position air valve should read 500 ohms and a full-closed position air valve should read between 8,000 and 10,000 ohms.

   Note: Take the readings when the valve is in the full-open or full-closed position. Be sure the six-lead motor plug is removed from the circuit board when taking resistance readings.

3. If the resistance readings are correct, reinstall the six-lead motor plug, run the valve to the opposite end stop and tighten the setscrew. If the resistance readings are different than those described, recalibrate the potentiometer per the following:

   a. Be sure the allen-head setscrew on the potentiometer is still loose, and that the valve is run full-open or full-closed.

   b. Turn the adjusting screw on the potentiometer shaft (see Figure 11) until the proper resistance reading is obtained.

   c. Reinstall the six-lead motor plug into the circuit board and run the valve to the opposite end stop. Repeat the resistance reading.

   d. After the potentiometer adjustments are made, tighten the setscrew.

Figure 11
Potentiometer Shaft
Adjustment Screw

TD/VAV-1033

Figure 12
Location of Potentiometer Terminals

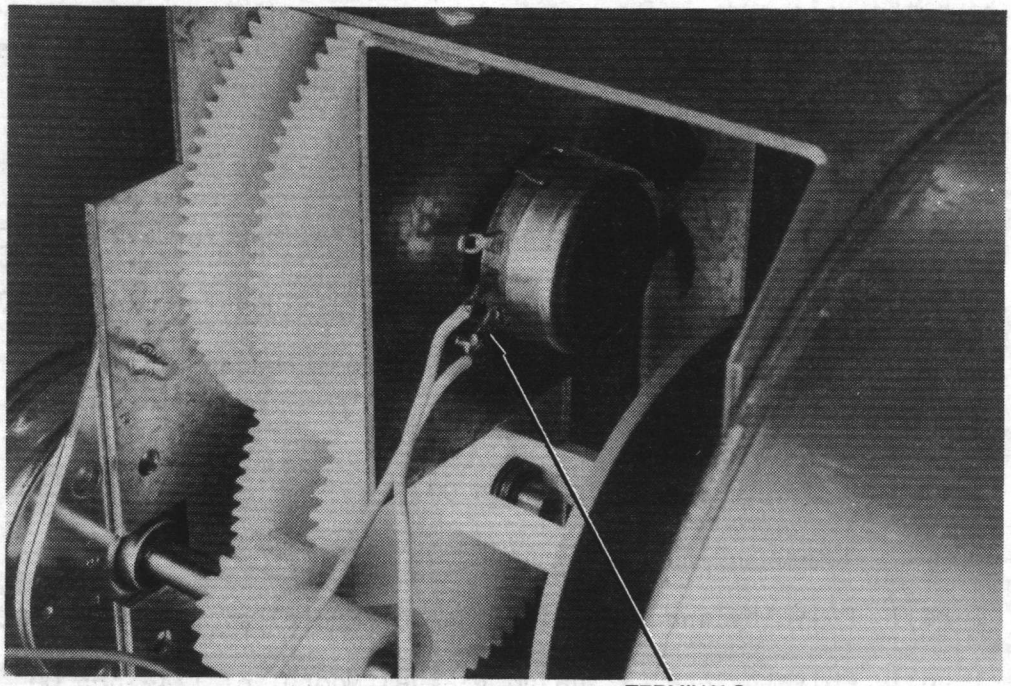

TD/VAV-1034

Trouble Analysis

Tools and Equipment

When troubleshooting or repairing a fan-powered VariTrane, it is important to have the necessary tools and instruments readily available. Trouble analysis and repair procedures in this manual employ the following special supplies and equipment:

For Pneumatic Control

1	0-4-inch magnehelic gauge with fittings for 1/4-inch OD tubing.
3	0-1-inch magnehelic gauge with fittings for 1/4-inch OD tubing.
1	Hand pump with a 0 to 20-psi pressure gauge.
1	0 to 20-psi pressure gauge.
5 ft.	Tygon tubing of 3/8-inch OD.
20 ft.	Tygon tubing of 1/4-inch OD.
1 roll	Polyethylene FR tubing (Samuel Moore) of 5/32-inch OD.
1 roll	Polyethylene FR tubing (Samuel Moore) of 1/4-inch OD.
20	Tees for 1/4-inch OD tubing.
20	Tees for 5/32-inch OD tubing.
5	Tees for 3/8-inch OD tubing.
5	Reducers - 3/8-inch to 1/4-inch OD.
5	Reducers - 1/4-inch to 5/32-inch OD.
20	Rubber caps with 5/32-inch OD tube fittings.
20	Rubber caps with 1/4-inch OD tube fittings.
1	VOM
1	Pilot tube of 1/8-inch diameter.
1 roll	Duct tape.
4	Jumper leads.

For Electric Control

1	0-4-inch magnehelic gauge with fittings for 1/4-inch OD tubing.
3	0-1-inch magnehelic gauge with fittings for 1/4-inch OD tubing.
1	Electric motor testing switch (Trane).
20 ft.	22-gauge wire.
1	Pitot tube of 1/8-inch diameter.
1	VOM
1 roll	Duct tape
4	Jumper leads.
1	24-volt power supply to plug into 115-volt outlet.

Trouble Analysis Chart

After thoroughly analyzing the system for sufficient air supply and design requirements, use the following chart to determine the possible cause or causes of a malfunction. Once the problem area has been located, use the check procedures given after this chart for further troubleshooting of the air valve, controls, fan system or thermostat (in that order).

Note: When a single component is not functioning properly, check it individually. Always be sure that correct voltage is available and that all pneumatic and electric connections are correct.

System Check

Improper room control may be caused by problem areas other than the VAV boxes. Before removing the air valve or control box, make sure that the entire system is operating properly and is supplying sufficient air to the valve. Complete the following checks:

WARNING: DISCONNECT ELECTRICAL POWER SOURCE AND ALLOW ALL ROTATING PARTS TO STOP BEFORE SERVICING THE UNIT. FAILURE TO DO SO MAY RESULT IN INJURY OR DEATH FROM ELECTRICAL SHOCK OR MOVING PARTS.

1. Look for obvious leaks in the duct system. Ensure that sufficient static pressure is present at the air valve inlet.

2. Inspect the supply fan and VAV fan filters. Clean or replace if necessary.

3. Check thermostat location. Outside walls, appliances, direct sunlight or the supply airstream may be artificially heating or cooling the thermostat. If room temperature is well below setpoint, check the supply air temperature.

4. Evaluate diffuser location. Each slot diffuser should have 15 inches of flat ceiling surface on either side of the slot to ensure proper air distribution. Check that airflow from grilles or diffusers is properly balanced. Refer to VAV-IN-15.

5. Each VariTrane control unit must be mounted level. The backdraft damper and volume regulator are position-sensitive.

6. For accurate flow control, there must be at least 2 duct diameters of straight ductwork before the air valve inlet. Electric coils require 4 feet of straight ductwork downstream of the coil.

7. Refer to schematic electrical and pneumatic diagrams on the unit to check for proper connections. Look for obvious tubing leaks or broken parts on the controller.

8. Compare voltage requirements, as specified on the side of the unit, with actual voltage supplied to the unit. For electrically controlled valves, motor input voltage must be 24 VAC $\pm$ 10%.

9. Attach a magnehelic gauge to the flow sensor tubes and check minimum and maximum cfm settings on units with pneumatic volume regulators. Flow settings should be as indicated on the unit calibration labels. Refer to Table 2.

WARNING: IF POWER MUST BE ON FOR TESTING PROCEDURES, DISCONNECT POWER WHILE CONNECTING ELECTRICAL WIRES OR CLOSELY EXAMINING THE UNIT. FAILURE TO EXERCISE CAUTION DURING TEST PROCEDURES OR REPAIR MAY RESULT IN INJURY OR DEATH FROM ELECTRICAL SHOCK OR MOVING PARTS.

Table 2
CFM Setting Guidelines for Units with Ring-Type Flow Sensors

Valve Size	Nominal CFM	Max. (Design) CFM Setting Range	Min.(Design) CFM Setting Range
04	400	550 - 80	550 - 80
08	800	1090 - 145	1090 - 145
12	1200	1640 - 225	1640 - 225
20	2000	2460 - 350	2460 - 350

Notes:

1. Minimum flow settings may be specified for flow sensor readings between 0.03" and 0.30" WG. Maximum flow settings may be specified for flow sensor readings between 0.15" and 1.00" WG. However, a **difference of at least 0.15" WG must be specified between the maximum and minimum flow settings,** (i.e., if the maximum is 0.33" WG, then the minimum may be no more than 0.18" WG).
2. For use with pneumatic volume regulators and maximum volume limiters.

MODELS VSCC and VSEC

SYMPTOM	POSSIBLE CAUSE	RECOMMENDED ACTION
Fan not running.	PNEUMATIC OR ELECTRIC CONTROL a. Faulty electrical connections.	a. Check wiring diagrams and inspect all connections.
	b. Incorrect voltage input.	b. Compare actual voltage with supply requirements (24V).
	c. Faulty fan motor.	c. Check motor and replace if necessary.
	d. Reversing relay faulty.	d. Check relay setting.
	PNEUMATIC CONTROL e. Incorrect piping.	e. Check pneumatic diagrams on unit.
	f. Faulty fan P.E. switch.	f. Check switch and replace if necessary.
	ELECTRICAL CONTROL g. Faulty circuit board.	g. Check circuit board and replace if necessary.
Fan motor noise.	a. Incorrect voltage input.	a. Compare actual voltage with supply requirements.
	b. Loose fan wheel.	b. Adjust and tighten fan wheel.
	c. Faulty fan motor.	c. Check and replace motor if necessary.
Low cfm to unit.	a. Inlet ductwork not straight.	a. Check that 2 to 4 duct diameters of inlet ductwork is straight.
	b. Supply fan not providing adequate cfm.	b. Adjust supply fan speed.
	c. Leaky ductwork.	c. Repair leaks with duct tape or sealer.
	d. Dirty filters.	d. Clean or replace supply air filters.
High or low cfm to zone.	PNEUMATIC OR ELECTRIC CONTROL a. Debris jamming valve.	a. Clear valve damper travel.
	b. Damaged valve casing.	b. Repair casing or replace valve.
	c. Improper wiring or tubing.	c. Check unit diagrams for correct connections.
	d. Faulty thermostat.	d. Check and replace if necessary.
	e. Faulty fan motor.	e. Check and replace if necessary.
	f. VAV fan speed incorrect.	f. Rewire fan motor to correct speed.
	g. Incorrect cfm to unit.	f. Rewire fan motor to correct speed.
	PNEUMATIC CONTROL h. Leaky piping.	h. Locate and repair leaks.
	i. Jammed diaphragm.	i. Repair and replace pneumatic diaphragm.
	j. Control setting incorrect.	j. Recalibrate controls. Check and replace if necessary.
	k. Reversing relay ports 1 and 3 switched.	k. Correct port connections.
	l. Faulty fan P.E. switch.	l. Check and replace if necessary.
	m. Obstruction to VAV fan air.	m. Clear area 2 feet around unit.
	ELECTRIC CONTROL n. Faulty circuit board.	n. Check and replace if necessary.
	o. Faulty valve motor.	o. Check and replace if necessary.
	p. Cfm setting incorrect.	p. Recalibrate circuit board.
Incorrect air temperature to zone.	a. Faulty reheat coil PE switch. Incorrect wiring.	a. Check and replace if necessary. Compare wiring with diagram on unit.
	b. Incorrect control settings.	b. Check reversing relay constant and cfm limits.
	c. Faulty reheat coil.	c. Check all switches and wiring. Refer to heater nameplate for amperage range. Replace coil if necessary.
	d. Faulty thermostat.	d. Check and replace if necessary. Check for correct action.
	e. Leaky tubing.	e. Locate and repair leaks.
	f. Faulty circuit board.	f. Check and replace if necessary.

Pneumatic Air Valve Check

To troubleshoot the pneumatic air valve, disconnect the actuator port at the valve and attach a hand pump with a 0 to 20-psi gauge as shown in Figure 13. Connect a magnehelic gauge to the flow taps and complete the following:

1. With no signal to the actuator, note the Delta P obtained on the magnehelic gauge.

2. Squeeze the hand bulb once and notice the increase in pressure, which should increase approximately 3 to 4 psi. If no pressure can be built, the diaphragm is probably ruptured and should be replaced. If incorrect pressure is built, the diaphragm may be jammed.

3. Squeeze the bulb again. After the first pressure increase of 3 to 4 psi, it should increase more slowly to about 5 psi.

4. Squeeze the bulb three or four more times to increase pressure only slightly. If pressure does not increase or jumps, the diaphragm may be jammed or the internal components are rusty or dirty and need replacement.

5. Continue pumping the valve to its closed position, noting the Delta P signal from the flow taps. When 0.15 inch wg is noted on the magnehelic gauge, record the actuator pressure on the pressure gauge.

   Note: When 10 to 11 psi is reached, the Delta P signal should be 0 and the air pressure should jump more rapidly up to 14 or 15 psi with one extra squeeze of the bulb. If it does not, the diaphragm may be jammed.

6. Allow the other unit to rest in this position for approximately 30 seconds to 1 minute. If the pressure decreases during this time by more than 2 psi, there is probably an unacceptable leak in the diaphragm or the system tubing.

7. Allow pressure to bleed from the system slowly. When 0.15 inch wg is obtained, record the pressure signal on the pressure gauge. This pressure reading should be within 1.5 psi of the pressure signal recorded in Step 5.

Figure 13
Gauging for Pneumatic Air Valve Check

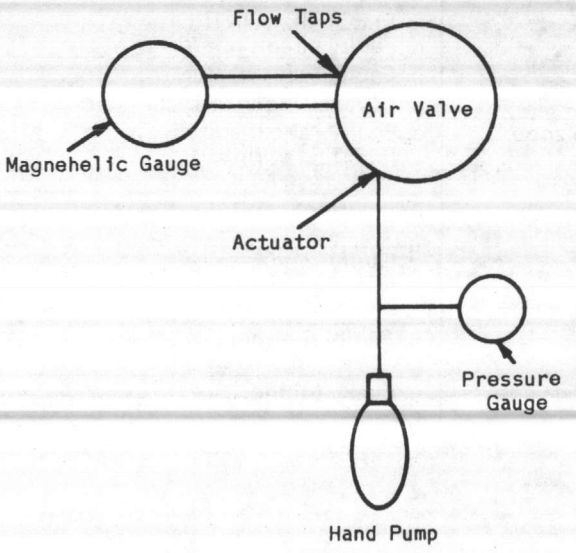

8. Bleed system pressure to 0. Note the Delta P signal and compare it to the reading taken in Step 1. It should be the same as that reading.

Note: Resplice pneumatic lines after they have been disconnected in order to prevent stretched and leaky tubing.

Actuator pressure range is approximately 5 to 10 psi. Therefore, when first pumping the valve closed, the pressure should build very rapidly because the volume of the actuator is not yet being changed. After the first pump, the volume changes and pressure increases more slowly. When the actuator reaches the full stroke position, its volume stays the same and pressure again increases rapidly.

If these pressure changes do not occur at the correct times, or if there is no distinct break point between the changes, the valve may be jammed. If the Delta P signal jumps or if the valve appears to jump, then the diaphragm may be jammed or the valve internal components are rusted and dirty and will have to be replaced.

If the damper does not fully retract, the diaphragm may not be properly oriented or the damper seal may be blocking a discharge cylinder hole. If valve operation must be viewed directly, the valve may be removed enough to expose the discharge cylinder holes.

Electric Air Valve Check

To troubleshoot the electrically controlled air valve, the Trane electric VariTrane motor tester should be used. The tester consists of a single-pole, double-throw switch that drives the motor from one extreme to the other. For analysis, complete the following:

1. Visually inspect the air valve for loose gaskets, rust, casing damage or any hindrances to damper travel.

2. Ensure that there is proper voltage supplied by checking for 24 volts at terminals 1 and 2 on the circuit board. Actual voltage must be within 10% of 24 volts (21.6 minimum).

   WARNING: DISCONNECT ELECTRICAL POWER SWITCHES BEFORE CONNECTING OR DISCONNECTING ANY ELECTRICAL WIRING. TURN POWER BACK ON AFTER WIRING IS COMPLETED. FAILURE TO EXERCISE CAUTION DURING ELECTRICAL TEST PROCEDURES MAY RESULT IN INJURY OR DEATH FROM ELECTRICAL SHOCK.

3. **With power supply disconnected,** connect a 24 VAC power supply to the terminals on the motor tester marked "24 VAC".

4. Connect the 6-lead motor plug to the white plug on the circuit board.

5. Connect an ohmmeter across terminals TP1 and TP2 and reconnect supply power. This reading indicates position potentiometer resistance.

6. With the tester, drive the air valve fully closed. Damper travel should be smooth and uninterrupted. The ohmmeter reading should be between 8,000 and 10,000 ohms. When the valve is fully open, the resistance reading should be 500 ohms. If actual readings differ, reconnect supply and motor leads and recalibrate the position potentiometer.

7. If the readings are correct, operate the valve back and forth. Connect a magnehelic gauge to the flow taps to monitor flow and valve movement. If the unit will not go fully closed, the valve damper is stuck. Inspect and repair internal components.

Pneumatic Controls Check

Pneumatic Actuator With Thermostat Only

To troubleshoot the pneumatic actuator on units supplied with only a remote-mounted thermostat, connect a hand pump to the line between the restrictor and standard tees, as shown in Figure 14, in order to pressurize both the air valve and the PE switch. Place a thermometer in the unit discharge to monitor air temperature. Complete the following steps:

1. Pump the squeeze bulb to increase line pressure and close the air valve. The valve should begin to move at 5 or 6 psi.

2. If pressure cannot be built by the squeeze bulb and the valve does not close, disconnect the standard tee from the line and pressurize first the air valve and then the PE switch directly to check for leaks. If leaks are found, replace or resplice the lines. If no leaks are evident, troubleshoot the air valve.

3. If pressure can be built by the squeeze bulb, the valve should be fully closed at approximately 11 psi. The PE switch should start the fan at approximately 12 psi. If power to the fan is disconnected for testing, connect an ohmmeter to the switch wire terminals to check for switch closing. If the switch is not closing and no leaks are apparent, recalibrate or replace the PE switch.

Figure 14
Gauging for Pneumatic Control Check for Units with Thermostat Only

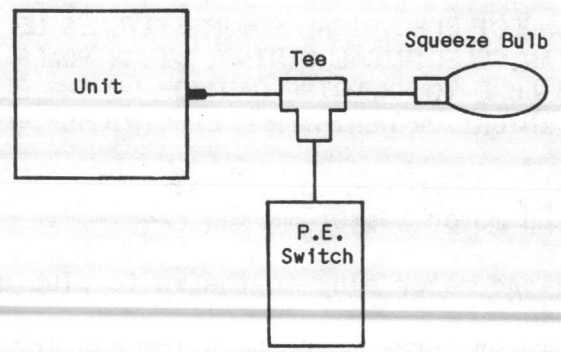

4. Continue pumping. The first stage of heat should engage at approximately 14 psi.

   Note: A voltmeter across the heater coils may be used to determine energization of heater stages if not using a thermometer in discharge air or ductwork.

5. Second and third stages of heat should engage at 15-1/2 and 17 psi, respectively.

Note: Always trim back lines that have been disconnected in order to prevent stretched and leaky tubing.

Pneumatic Actuator With Volume Regulator

The following instructions describe how to troubleshoot the VariTrane VCV 2500 pneumatic volume regulator (PVR). The first three steps are common to all four configurations. See Figure 15 for reference.

Note: If plastic tubing is pulled from a connection, trim it back before replacing it on the fitting. Stretched tubing may leak and cause faulty control.

1. Remove the caps on the tees which connect the flow sensor to the volume regulator. Connect a 0 - 1" magnehelic gauge to monitor flow sensor Delta P. The higher pressure port is the farthest upstream on the air valve inlet.

Figure 15
Gauging Required to Test
Pneumatic Volume Regulator

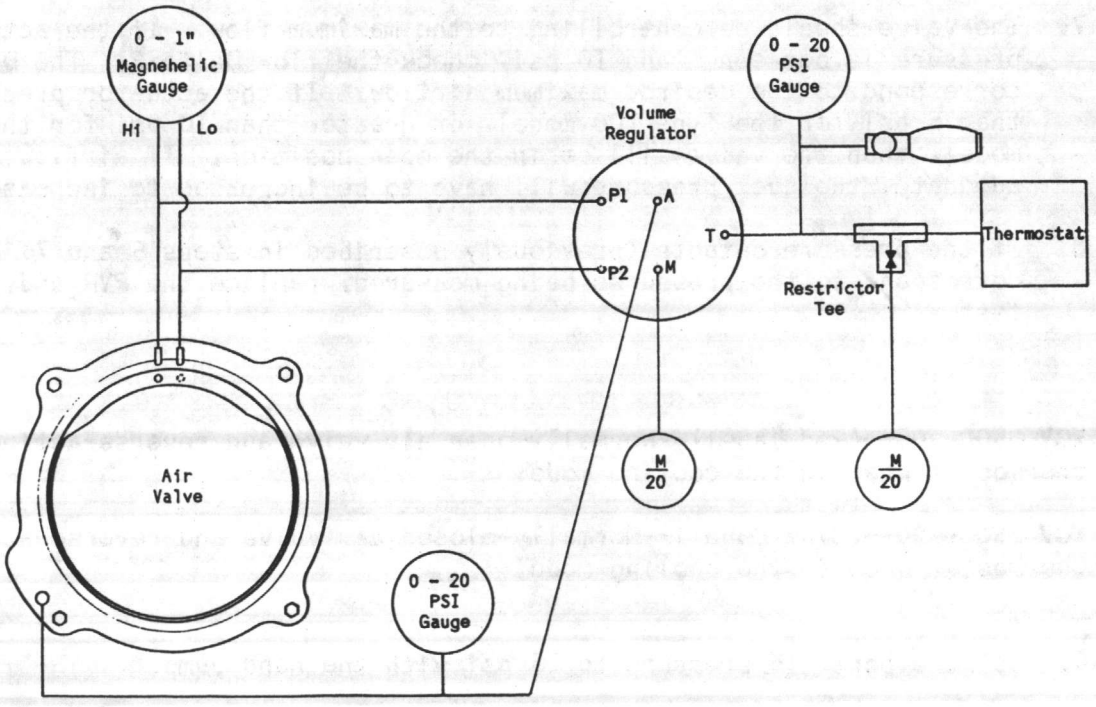

2. Remove the thermostat line and connect a hand pump with a 0 - 20 psi gauge to port "T" on the PVR.

   Note: The PVR has barbed plastic fittings on ports "T", "M", and "A". It is important not to damage these ports when disconnecting and connecting tubing. Most tubing will not pull off easily and may have to be partially trimmed back before replacing it on the fitting.

3. Tee a 0 - 20 psi gauge in the line from port "A" on the volume regulator to the air valve actuator.

Go to the appropriate instructions for the pneumatic volume regulator model being checked.

VCV 2500-100--(White Label)--Normally-open air valve and direct-acting thermostat when in cooling mode.

VCV 2500-300--(Green Label)--Normally-closed air valve and direct-acting thermostat when in cooling mode.

4. Set port "T" pressure to 4 psi with the hand pump.

5. The valve should be controlling to minimum or zero flow. If the actuator pressure is between 5 and 10 psi, check the flow Delta P. The Delta P should correspond to the desired minimum airflow. If the actuator pressure is greater than 10 psi for the Type 100 model, or less than 5 psi for the Type 300 model, then the valve is controlling to zero airflow. Check the Delta P to confirm the valve is in the closed position.

6. Set the port "T" pressure to 16 psi with the hand pump.

7. The valve should be controlling to the maximum flow. If the actuator pressure is between 5 and 10 psi, check the flow Delta P. The Delta P should correspond to the desired maximum airflow. If the actuator pressure is less than 5 psi for the Type 100 model, or greater than 10 psi for the Type 300 model, then the valve will be in the open position. If airflow is still not adequate, the duct pressure will have to be increased to increase airflow.

8. If the pressure outputs (previously described in steps 5 and 7) do not correspond to the pressures being measured, replace the PVR and repeat the test.

VCV 2500-200--(Red Label)--Normally-open air valve and reverse-acting thermostat when in the cooling mode.

VCV 2500-400--(Blue Label)--Normally-closed air valve and reverse-acting thermostat when in the cooling mode.

4. Set the port "T" pressure to 16 psi with the hand pump.

5. The valve should be controlling to minimum or zero airflow. If the actuator pressure is between 5 and 10 psi, check the flow Delta P. The Delta P should correspond to the desired minimum airflow. If the actuator pressure is between 10 psi for the Type 200 model, or less than 5 psi for the Type 400 model, then the valve is controlling to zero airflow. Check the Delta P to confirm the valve is in the closed position.

6. Set the port "T" pressure to 4 psi.

7. The valve should be controlling to the maximum flow. If the actuator pressure is between 5 and 10 psi, check the flow Delta P. The Delta P should correspond to the desired maximum airflow. If the actuator pressure is less than 5 psi for the Type 200 model, or greater than 10 psi for the Type 400 model, then the valve will be in the open position. If airflow is still not adequate, the duct pressure will have to be increased to increase airflow.

8. If the pressure outputs described in steps 5 and 7 (above) do not correspond to the pressures being measured, replace the PVR and repeat the test.

Electric Controls Check

WARNING: DISCONNECT ELECTRICAL POWER SOURCE BEFORE CONNECTING OR DISCONNECTING WIRES FROM THE CIRCUIT BOARD. FAILURE TO EXERCISE CAUTION DURING ELECTRICAL TEST PROCEDURES MAY RESULT IN INJURY OR DEATH FROM ELECTRICAL SHOCK.

To troubleshoot the electronic circuit board, complete the following:

1. **Disconnect power source** and remove thermostat wires 3, 4 and 5. Be sure to mark the wires so that they will be correctly replaced.

2. Reconnect power to the unit. The valve should move to its minimum or fully closed position.

3. Adjust the minimum flow setting so that the valve closes completely. If the unit appears to be operating correctly, check the positions of the minimum and maximum flow potentiometers and the minimum flow obtained before the valve is forced to close.

4. Jumper terminals 4 and 5. This should cause the valve to move fully open or to its maximum flow setting.

5. Disconnect the jumper from terminals 4 and 5. The valve should close completely and the fan should start.

6. If the fan does not start, check contact K1 for proper closure. Disconnect the orange wire from terminal 7 and attach an ohmmeter from terminal 6 to terminal 7 in order to ensure that the ohmmeter does not see a voltage signal. Disconnect the black jumper from terminal 6, which leads to terminal 1. Relay K1 is normally open, so that when there is no jumper from terminal 4 to terminal 5, K1 should be closed and the resistance should be near zero.

7. Jumper terminal 4 to terminal 5. K1 should be open and the resistance between terminals 6 and 7 should increase to infinity. The air valve should be open.

8. If everything operates correctly at terminal 7, disconnect the ohmmeter and reconnect all wires. Check the air valve or thermostat for further trouble analysis.

Heater Contactors

To troubleshoot heater contacts on units with electric control, complete the following:

1. Disconnect power source.

   WARNING: FAILURE TO DISCONNECT ELECTRICAL POWER BEFORE SERVICING THE UNIT MAY RESULT IN INJURY OR DEATH FROM ELECTRICAL SHOCK.

2. Disconnect wires from the contactor.

3. Connect an ohmmeter to the contacts.

4. Apply 24 volts (from independent power supply) to the coil. Check for contact closure. If contacts do not close, replace.

Thermostat Check

Pneumatic Control

To troubleshoot the pneumatic thermostat, disconnect the output line at the first tee out of the thermostat and connect a 0 to 20 psi pressure gauge. Then complete the following:

1. Check that main air is supplied to the thermostat.

2. Modulate the thermostat lever or dial from warm to cool. Monitor the thermostat output pressure, which should build to greater than 15 psi if main air pressure of that amount is available.

3. To determine whether the proper acting thermostat is being used, move the temperature selector to full cool. If output pressure is low or near zero, the thermostat is reverse-acting. If output pressure is high, the thermostat is direct-acting. All fan-powered cooling units with pneumatic controls use reverse-acting thermostats.

4. Check pneumatic diagrams for proper connections.

   Note: Always trim back pneumatic tubing that has been disconnected from its connections in order to prevent stretched and leaky lines.

Electric Control

To troubleshoot the electric thermostat, connect a magnehelic gauge to the flow sensor taps and ensure that 24 volts are available to the control circuit board. Then complete the following:

1. Move the thermostat to full cooling. The valve should open completely. If the valve closes instead of opening, check that the proper thermostat connections are made. Refer to specific wiring diagrams on the control box.

2. Rotate the thermostat knob or move the thermostat lever to full warm. This should cause the valve to close and the fan to come on, as the room setpoint is far above actual room temperature. Finally, heater stages should energize.

3. If the thermostat does not operate at all, replace it. If the action is reversed, check the thermostat-to-circuit board wiring as given on the side of the unit.

Fan Motor Check

WARNING: DISCONNECT POWER BEFORE REMOVING COVER OF TERMINAL BOX. WHEN POWER IS TURNED ON FOR TEST PROCEDURES, USE CAUTION. FAILURE TO DISCONNECT POWER OR EXERCISE CAUTION WHILE SERVICING THE UNIT MAY RESULT IN INJURY OR DEATH FROM ELECTRICAL SHOCK.

Pneumatic Control

To troubleshoot the fan system on units with pneumatic controls, complete the following:

1. Check that the proper motor voltage is present.

2. Connect a hand pump to the PE switch.

3. Operate the unit by increasing pressure with the hand pump. If the motor will not start, continue with Step 4. If the motor runs but the fan section creates loud or unusual noises, check that the wheel is tight and that there is proper clearance between the fan wheel and the inlet collar of the fan housing.

4. Disconnect power and check all connections inside the terminal box. Compare actual unit wiring with specific diagrams provided in the terminal box.

5. With power disconnected, install a voltmeter between the white terminal on the terminal block and the black wire which leads from the PE switch to the motor.

6. Turn power on. Pressurize the PE switch with the hand pump and monitor the voltmeter. If the voltmeter shows line voltage to the motor when the PE switch closes, the motor is probably faulty and needs to be replaced. If the motor will not run, check for a burning smell, motor hum or other unusual symptoms.

7. Disconnect power and spin the fan by hand. If the fan turns roughly, replace the motor.

Electric Control

To troubleshoot the fan motor on units with electric controls, complete the following:

1. With power disconnected, check all wiring for secure terminals and compare actual wiring with wiring diagrams provided on the unit.

2. Check the motor relay by attaching a voltmeter across the 24V coil of the relay. (The red and orange wires coming from the circuit board are the 24V leads to the coil). Operate the thermostat to see that the voltage to the relay is turned on and off.

3. With power disconnected, attach a voltmeter to the white common wire on the terminal block and the motor relay block wire which leads to one of the black, blue or red wires from the motor.

4. Turn power back on. Operate the thermostat to see if the proper voltage signal is being supplied to the motor. If the motor does not start, check capacitor and fan motor.

5. With power off, spin the fan wheel. If it does not turn freely, check shaft alignment or housing clearances.

6. Check that 24 volts are available to operate the controls. If not, check the transformer by connecting a voltmeter to the 24V transformer output. Turn power on and notice the voltage reading. If no voltage is present, connect the voltmeter to the primary side (high voltage side) and turn power on. Check that primary voltage is available to the transformer.

For further information on this product or other Trane products, refer to the "Trane Service Literature Catalog", ordering number IDX-IOM-1. This catalog contains listings and prices for all service literature sold by Trane. The catalog may be ordered by sending a $20.00 check to: The Trane Company, Service Literature Sales, 3600 Pammel Creek Road, La Crosse, WI 54601.

PRINTED BY PRODUCTION SERVICES — LA CROSSE JH/LW

TRANE™

Installation CLCH-IN-3A

Library	Service Literature
Product Section	Air Handling
Product	Central Station Air Handlers
Model	Climate Changers
Literature Type	Installation
Sequence	3A
Date	August 1986
File No.	SV-AH-CLCH-CLCH-IN-3A-886
Supersedes	CLCH-IN-3 (186)

CLIMATE CHANGER® CENTRAL STATION AIR HANDLERS

DRAW-THRU, BLOW-THRU SPRAYED COIL AND HIGH PRESSURE UNITS

B DEVELOPMENT SEQUENCE

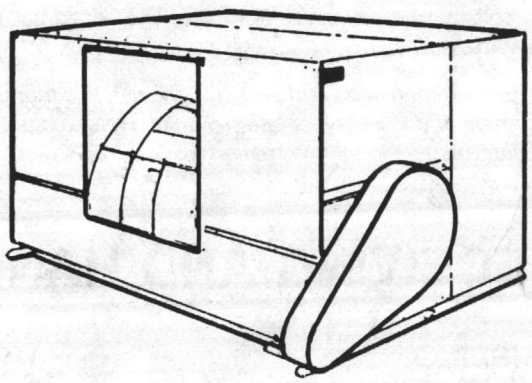

DRAW-THRU

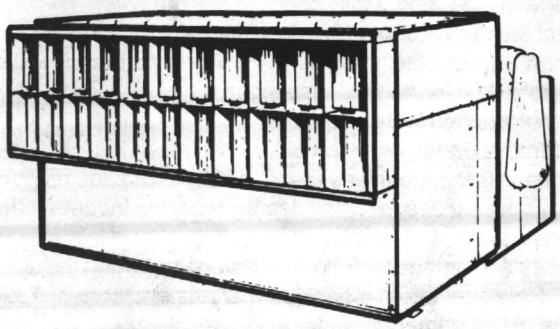

BLOW-THRU

The Trane Company
La Crosse, Wisconsin 54601-7599
Printed in U.S.A.

©American Standard Inc. 1986

X39640290-02

Since The Trane Company has a policy of continuous product improvement, it reserves the right to change specifications and design without notice. The installation and servicing of the equipment referred to in this booklet should be done by qualified, experienced technicians.

TABLE OF CONTENTS

ITEM	PAGE
GENERAL INFORMATION	2
RECEIVING AND HANDLING	2
INSTALLATION	
Unit Location Recommendations	5
Mounting	6
Accessories	17
Fan Motor Assembly	20
Dampers	21
Inlet Vanes	24
Ductwork	25
Piping	33
Wiring	35
INSTALLATION CHECKLIST	35
START-UP	37
Final Check/Procedures	38
Sheave Alignment	38
Setscrews	38
Wheel Clamps	39
Belt Tension	39

Literature Change History:

CLCH-IM-10 (June 81)

Introduce infinity variable fin series. Change design sequence to "C".

CLCH-IN-2 (August 84)

Change bearing type (opposite drive side) on unit sizes 17 thru 31 w/stub shaft. Include weights for units with wide coils. Specific instructions for units shipping with optional coilless. Convert CLCH-IM-10C into separate Installation and Maintenance Manuals (CLCH-IN-2 & CLCH-M-1). Change design sequence to "D".

CLCH-IN-3 (January 1986)

Added level coils and Delta-Flo coils to units. Added cradle dimensions for wide coil unit sizes 3 thru 31. Added and updated Tables (4, 8A and 12). Change design sequence to "E".

CLCH-IN-3A (August 1986)

Corrected Figure 49.

GENERAL INFORMATION

Central Station Climate Changers® are air handlers designed to provide complete heating, cooling and dehumidifying by means of a wide variety of unit sizes, coils, fans and efficiency capabilities. This manual will cover all vertical and horizontal, draw-thru, blow-thru, sprayed coil and high pressure units.

NOTE: *All dimensions and weights given in this manual are approximate and will vary for special units. Refer to submittal data for exact dimensional information.*

An Installation Checklist is given at the end of the Installation section of this manual to be used by the installing contractor to verify proper installation procedures. These checklists should not be substituted for the detailed information and procedures contained in appropriate sections of the manual.

RECEIVING AND HANDLING

SHIPPING

Central Station Climate Changers® are shipped either assembled or in sections, depending on unit size and accessories. All units or sections of units are attached securely to skids. Nuts, bolts and washers necessary for unit assembly are attached to one of the skids. Motors ship separately when their size or location on the unit prevents safe transit. Access section is shipped unassembled.

To protect against loss from in-transit damage, complete the following upon receipt of the unit:

1. Inspect individual pieces of the shipment before accepting it. Check for rattles, bent corners on cartons or other visible indications of shipping damage.
2. If a carton or unit has apparent damage, open it immediately and inspect the contents before accepting the unit. Do not refuse the shipment. Make specific notations concerning the damage on the freight bill.
3. Inspect the unit for concealed damage before it is stored and as soon as possible after delivery. Refer to the checklist given in step 8 for internal inspections. Concealed damage must be reported within 15 days.
4. Do not move damaged material from the receiving location if possible. It is the receiver's responsibility to provide reasonable evidence that concealed damage was not incurred after delivery.
5. If concealed damage is discovered, stop unpacking the shipment. Retain all internal packing, cartons and crates. Take photos of the damaged material if possible.
6. Notify the carrier's terminal of the damage immediately by phone and mail. Request an immediate joint inspection of the damage by the carrier and consignee.
7. Notify the Trane sales representative of the damage and ar-

range for repair. Do not repair the unit, however, until damage is inspected by the carrier's representative. Trane is not responsible for shipping damage.

8. Complete the following inspections before installing the unit:
   a. Verify that the correct unit has been received by comparing nameplate and model number information with submittal data.
   b. Rotate the fan manually to be sure that it is free to operate. Inspect the fan housing for obstructions which may have entered the unit during shipment.
   c. Check all dampers in the unit and accessories to be sure they are free to move and have not been damaged in transit.
   d. Make sure the inlet vanes operate freely. Check that all sets of vanes operate together when opening and closing.

Refer to the Unit Location Recommendations in this manual before setting the unit in place. It is recommended that units are left on their skids for protection and ease of handling until set in place. For proper rigging and hoisting procedures, refer to the Rigging section of this manual and the instruction label on the unit.

RIGGING

Before preparing the unit or component for lifting, estimate the approximate center of gravity for lifting safety. Because of placement of internal components, the unit weight may be unevenly distributed, with more weight in the coil area. Approximate unit weights are given in Tables 1, 2 and 3.

Before hoisting the unit, be sure that the proper method of rigging is used, with straps or slings and spreader bars for protection during lifting. See Figure 1. Refer to the unit label for recommended rigging procedures. Always test-lift the unit to determine exact unit balance and stability before hoisting it to the installation location.

WARNING: DO NOT LIFT THE UNIT WITHOUT TEST-LIFTING FOR BALANCE AND RIGGING. DO NOT LIFT THE UNIT IN WINDY CONDITIONS OR ABOVE PERSONNEL. DO NOT LIFT THE UNIT BY ATTACHING A CLEVIS, HOOKS, PINS OR BOLTS TO THE CASING, CASING HARDWARE, CORNER LUGS, ANGLES, TABS OR FLANGES. FAILURE TO OBSERVE THESE WARNINGS MAY RESULT IN PERSONAL INJURY OR DEATH OR EQUIPMENT DAMAGE.

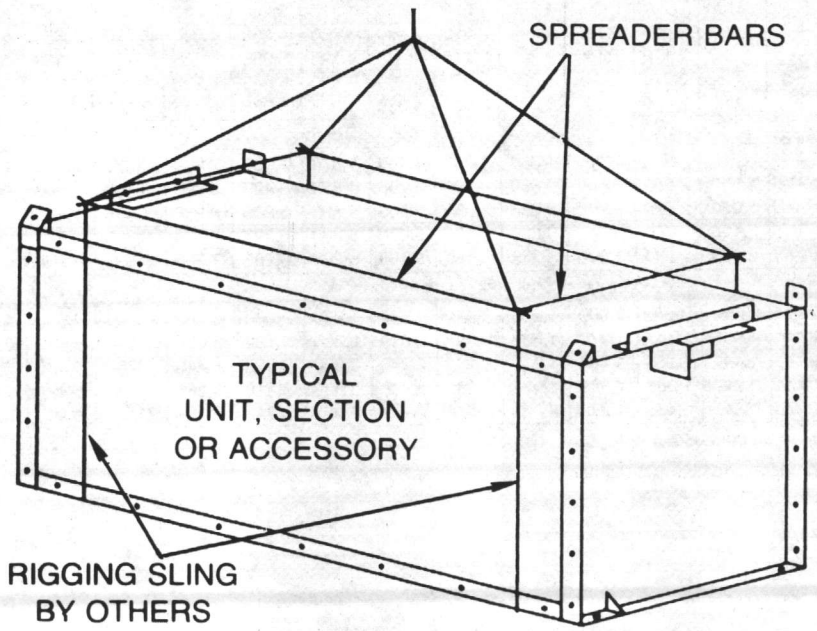

FIGURE 1 - Recommended Rigging Procedure

TABLE 1 - Climate Changer Unit Operating Weights In Pounds (Less Motors)

	UNIT SIZE															
	3	6	8	10	12	14	17	21	25	31	35	41	50	63	73	86
Draw-Thru Climate Changers																
Casing Only	205	275	400	460	700	750	1,015	1,225	1,380	1,455	2,100	2,540	2,750	4,270	4,710	5,030
2 Row	291	424	570	677	978	1,060	1,429	1,639	1,850	2,117	2,832	3,558	,3708	5,529	5,850	6,390
4 Row	328	487	657	785	1,108	1,213	1,618	1,876	2,219	2,453	3,198	3,797	4,260	6,218	6,710	7,420
6 Row	368	552	742	891	1,243	1,369	1,807	2,018	2,381	2,813	3,616	4,261	4,794	6,929	7,560	8,440
8 Row	406	618	828	988	1,373	1,520	1,981	2,321	2,643	3,143	3,984	4,699	5,330	7,611	8,320	9,330
Draw-Thru Climate Changer w/Wide Coil																
Casing Only	225	295	425	490	730	780	1045	1260	1415	1505	2190	2715	2950	4845	4850	5170
With 2 Row	365	495	665	779	1089	1166	1535	1738	1951	2262	3041	3959	4121	5781	6157	6697
With 4 Row	426	579	788	922	1257	1357	1759	2005	2372	2647	3467	4251	4796	6578	7142	7854
With 6 Row	491	666	908	1063	1431	1552	1982	2246	2557	3058	3953	4818	5448	7401	8117	9448
With 8 Row	553	754	1030	1192	1599	1740	2188	2526	2856	3436	4381	5354	6103	8190	8988	9998
Blow-Thru Climate Changers																
Casing Only	—	605	765	810	880	1,095	1,260	1,425	1,600	1,810	3,250	3,650	4,025	4,580	5,030	5,530
2 Row	—	754	935	1,027	1,158	1,405	1,614	1,839	2,070	2,472	3,982	4,463	4,983	5,839	6,436	7,142
4 Row	—	817	1,022	1,135	1,288	1,558	1,803	2,070	2,339	2,808	4,348	4,907	5,535	6,528	7,240	8,114
6 Row	—	882	1,107	1,241	1,423	1,714	1,992	2,298	2,609	3,168	4,766	5,367	6,069	7,239	8,018	9,046
8 Row	—	948	1,193	1,338	1,553	1,865	2,166	2,521	2,863	3,498	5,134	5,809	6,605	7.921	8,824	9.998
Single-Zone Blow-Thru Climate Changers																
Casing Only	—	386	544	631	760	900	1,080	1,235	1,370	1,560	2,780	3,115	3,435	4,425	4,870	5,280
2 Row	—	535	714	848	1,038	1,210	1,434	1,629	1,840	2,222	3,512	3,928	4,393	5,684	6,276	6,892
4 Row	—	598	801	956	1,168	1,363	1,623	1,860	2,109	2,558	3,878	4,372	4,945	6,373	7,080	7,864
6 Row	—	663	886	1,062	1,303	1,519	1,812	2,088	2,379	2,918	4,296	4,832	5,479	7,084	7,858	8,796
8 Row	—	729	972	1,159	1,473	1,670	1,986	2,311	2,673	3,248	4,664	5,274	6,015	7,766	8,664	9,748
Sprayed Coil Climate Changers																
Casing Only	690	915	1,105	1,270	1,880	2,130	3,100	3,285	3,305	3,485	4,950	5,700	6,230	9,050	10,485	12,355
4 Row	815	1,125	1,360	1,595	2,290	2,595	3,745	4,125	4,145	4,485	6,050	6,950	7,740	10,100	11,700	13,787
6 Row	855	1,190	1,445	1,700	2,425	2,750	3,925	4,285	4,305	4,855	6,465	7,420	8,275	11,710	13,560	15,985
8 Row	890	1,260	1,535	1,800	2,555	2,900	4,195	4,550	4,570	5,175	6,835	7,860	8,810	12,390	14,355	16,910
High Pressure Sprayed Coil Climate Changers																
Casing Only	—	—	1,590	2,130	2,500	2,670	3,210	3,840	4,350	5,100	5,350	6,000	7,200	9,400	12,250	14,910
4 Row	—	—	1,845	2,455	2,910	3,135	3,755	4,485	5,190	6,100	6,450	7,250	8,710	11,350	14,250	17,300
6 Row	—	—	1,930	2,560	3,045	3,290	3,940	4,665	5,350	6,460	6,865	7,720	9,245	12,060	15,100	18,320
8 Row	—	—	2,020	2,660	3,175	3,440	4,115	4,935	5,615	8,790	7,235	8,160	9,780	12,740	15,950	19,210
High Pressure Draw-Thru Climate Changers																
Fan Section Only	—	—	610	770	920	1,060	1,290	1,580	1,870	2,060	2,200	2,330	2,580	2,950	4,090	5,400
Fan and Coil Section	—	—	1,250	1,800	2,150	2,250	2,650	3,400	3,950	4,250	4,600	5,250	5,650	6,850	8,260	10,400
4 Row	—	—	1,590	2,170	2,440	2,765	3,210	4,010	4,795	5,055	5,535	6,335	7,180	8,600	10,260	12,790
6 Row	—	—	1,720	2,310	2,690	3,030	3,370	4,180	4,930	5,445	5,935	6,785	7,930	9,350	11,110	13,810
8 Row	—	—	1,850	2,450	2,740	3,095	3,530	4,350	5,325	5,835	6,335	7,235	8,680	10,000	11,960	14,700
High Pressure Blow-Thru Climate Changers																
Fan Section Only	—	—	610	770	920	1,060	1,290	1,580	1,870	2,060	2,200	2,330	2,580	2,950	4,090	5,400
Fan and Coil Section	—	—	1,650	2,250	2,600	2,850	3,300	4,250	4,850	5,400	6,000	6,850	7,300	9,300	12,140	14,900
4 Row	—	—	1,990	2,620	2,900	3,365	3,860	4,860	5,595	6,205	6,935	7,935	8,830	11,050	14,140	17,290
6 Row	—	—	2,120	2,760	3,240	3,630	4,020	5,030	5,860	6,595	7,335	8,385	9,580	11,800	14,990	18,310
8 Row	—	—	2,250	2,900	3,290	3,745	4,180	5,200	6,225	6,985	7,735	8,835	10,180	12,450	15,840	19,200
Three Deck Multizone Climate Changers																
Casing Only	—	725	885	930	1,000	1,255	1,440	1,615	1,830	2,060	3,350	4,000	4,385	4,950	—	—
2 Row	—	874	1,055	1,147	1,278	1,560	1,794	2,029	2,300	2,722	4,082	4,813	5,343	6,219	—	—
4 Row	—	937	1,142	1,255	1,408	1,718	1,983	2,260	2,669	3,058	4,448	5,257	5,895	6,908	—	—
6 Row	—	1,002	1,227	1,361	1,543	1,874	2,232	2,488	2,839	3,418	4,866	5,721	6,429	7,609	—	—
8 Row	—	1,068	1,313	1,458	1,673	2,025	2,346	2,711	3,093	3,748	5,234	6,159	6,965	8,291	—	—

NOTE: Inlet vane weights will vary from 38 to 93 pounds per fan.

NOTE: Units with Delta-Flo coils will weigh approximately 10% lighter than standard coil weights.

TABLE 2 - Approximate Motor Weights*

Motor Horsepower	¼	⅓	½	1	1½	2	3	5	7½	10	15	20	25	30	40	50	60	75
Motor Weight (Lbs.)	20	20	25	33	44	44	71	82	127	144	187	214	263	300	409	460	560	660

*Standard Open Ball Bearing T-Frame Motor.

TABLE 3 - Accessory Weights (LBS.)

UNIT SIZES	3	6	7	8	9	10	12	14	17	21	25	31	35	41	50	63	73	86
Flat Filter Box																		
Throwaway	28	38	42	45	54	68	73	76	92	113	120	135	170	180	210	335	388	457
Low Velocity Permanent	33	47	52	56	67	84	91	97	117	145	155	183	222	234	284	426	494	582
High Velocity Permanent	51	63	69	75	91	108	120	131	156	193	207	257	306	338	365	582	674	794
Medium Filter Box																		
Throwaway	76	101	131	144	167	171	178	228	247	303	324	355	370	456	520	565	655	775
Low Velocity Permanent	84	117	149	162	191	195	204	260	284	348	373	413	429	546	631	695	805	950
High Velocity Permanent	96	141	181	190	227	231	248	312	347	428	456	513	557	706	799	935	1,085	1,275
High Capacity Box																		
Throwaway	111	148	155	170	180	192	229	260	278	330	398	425	470	535	590	680	788	928
Low Velocity Permanent	120	166	184	194	208	223	261	305	324	393	468	512	574	660	735	865	1,002	1,180
High Velocity Permanent	136	198	217	230	257	271	317	360	396	489	576	648	742	852	950	1,160	1,344	1,583
Roll Filter	80	114	—	142	—	158	187	204	219	250	290	363	430	475	500	750	870	1,025
Comb. Filt./Mix Box																		
Throwaway	115	168	200	248	255	286	300	215	358	400	490	620	710	790	885	1,133	1,310	,550
Low Velocity Permanent	122	184	217	266	279	310	324	345	393	441	540	686	780	874	997	1,165	1,465	1,730
High Velocity Permanent	134	208	249	298	315	346	368	397	456	521	635	786	906	1,035	1,265	1,505	1,740	2,060
Deluxe Comb. Filter/Mix Box																		
Throwaway	193	240	263	352	369	376	407	474	501	586	604	732	986	—	—	—	—	—
Low Velocity Permanent	200	256	280	370	393	400	431	504	536	627	654	798	1,056	—	—	—	—	—
High Velocity Permanent	212	280	312	402	429	436	475	556	600	707	739	898	1,182	—	—	—	—	—
Mixing Box	82	118	122	169	175	182	256	270	319	340	380	437	519	623	750	869	1,010	1,185
High Efficiency Bag Filter																		
Filter Sections	—	—	—	191	—	227	249	319	329	403	454	592	606	682	718	751	—	—
Bag Filters	—	—	—	11	—	14	18	23	25	30	41	50	64	64	75	100	—	—
Prefilters	—	—	—	2	—	3	4	5	5	6	9	11	13	13	17	22	—	—
*Diffuser Section	—	—	—	55	—	79	84	88	107	130	138	153	191	202	232	357	—	—
External Face and Bypass	40	58	79	96	100	112	154	161	170	216	292	417	457	470	618	925	1,070	1,265
Internal Face and Bypass	30	53	74	77	92	100	109	113	124	184	223	327	334	363	441	535	620	730
Face Dampers	39	55	65	91	102	106	111	115	142	225	232	297	312	370	446	543	630	742
Straight Thru Discharge Plenum	50	65	90	100	130	110	130	150	170	180	200	300	400	400	—	—	—	—

*Weight given is sum of diffuser section, duct extension and canvas duct.

INSTALLATION

UNIT LOCATION RECOMMENDATIONS

When selecting and preparing the unit operating site, consider the following:

1. Consider the weight of the unit. Tables 1, 2 and 3 list operating weights.
2. Allow sufficient space for the recommended clearances, access panel removal, and maintenance access. Refer to Figure 2. Zero clearance to combustible materials is approved for units with or without steam or hot water heating coils.
   NOTE: *For units with optional wide coil, always maintain a 2-foot clearance from coil section end panel to permanent wall or obstruction.*
3. The foundation or mounting platform must be large enough to include unit and accessory dimensions, given in specific sales submittals.
4. Rubber-in-shear or spring isolators are recommended. For floor-mounted units, anchor the unit to the floor or foundation to prevent strains on the piping and ductwork.
5. Installer must provide suspension or support frame for ceiling-mounted units size 35 and larger. Use the weights given in Tables 1, 2 and 3.
6. Prepare the floor or foundation so that it is level. The unit must be mounted level to ensure proper hydronic coil drainage and condensate flow.
7. Coil piping and condensate drain requirements must be considered. For units with Type F cooling coils, the installer must provide and install a condensing unit and piping. Allow room for proper ductwork and electrical connections. Support all piping and ductwork independently of unit to prevent excess noise and vibration.
8. Optional coilless horizontal draw-thru unit sizes 3, 6, 8, 10, 14 and 21 require the contractor to field install coil in unit per COIL INSTALLATION INSTRUCTIONS given in the installation manual (included with coil shipment). On ceiling-mounted unit applications it is recommended to install coil in unit **before** hoisting unit to operating position.

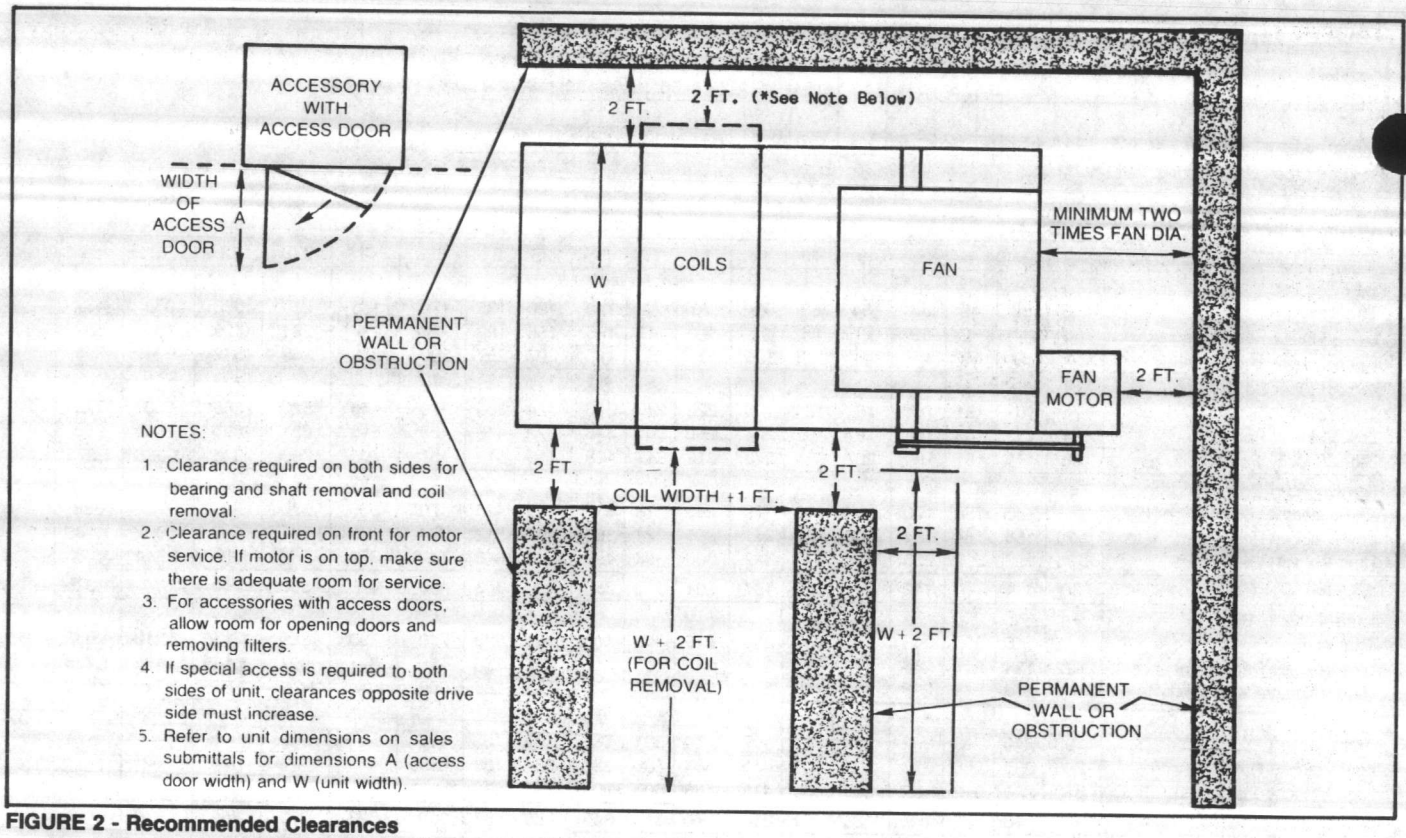

FIGURE 2 - Recommended Clearances

***NOTE FOR WIDE COIL UNITS: Always maintain a 2-foot clearance from coil section end panel to permanent wall or obstruction.**

MOUNTING

VIBRATION ISOLATORS

Vibration isolators and isolator mounting legs, when supplied, are shipped with the unit and attached to the shipping skid. Locate the mounting legs at all corners of the unit or component section or at appropriate support sites. Fasten the isolators to the floor securely before mounting the unit. See Figure 3.

NOTE: *If mounting the unit on a raised platform or foundation, be sure to allow room for the mounting legs and isolators, which extend beyond the unit dimensions.*

Level the unit after installation by adjusting the isolator levelling bolts. For ceiling-mounted units, use threaded rods or adjustable isolators to level the unit.

Be sure to consider the additional unit height if isolators are used when making duct, piping and electrical connections. For large Draw-Thru and Sprayed Coil units, the coil section must be mounted on a higher base than the fan section in order to compensate for the height of the fan section isolators.

NOTE: *Non-Trane isolators must be properly sized to ensure adequate support of the unit. Allow at least 20 percent weight addition when sizing isolators.*

If using spring-type isolators, the isolator levelling bolt must be adjusted to provide adequate isolation, as unit weight may cause the upper isolator housing to rest on the lower housing. See Figure 4. Clearance B must be between 1/4-inch and 1/2-inch under full unit weight. To increase the clearance, lift the unit off the mountings and turn the levelling bolt clockwise. Recheck the unit level and shim as necessary under the isolators.

After the isolator height is adjusted correctly, adjust the horizontal snubber bolt to minimize any horizontal movements.

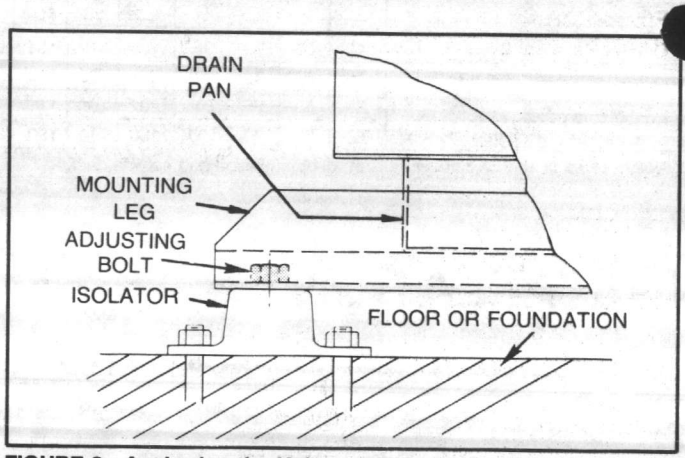

FIGURE 3 - Anchoring the Unit

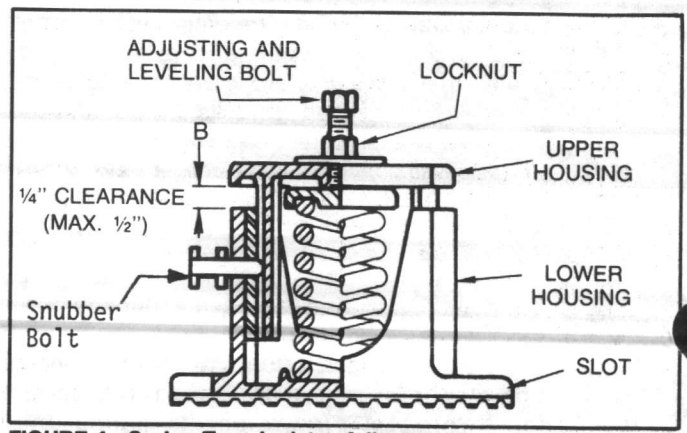

FIGURE 4 - Spring-Type Isolator Adjustment

MOUNTING — CLIMATE CHANGER AIR HANDLERS

DRAW-THRU UNITS

NOTE: *No draw-thru units and or accessories have factory gasketed panels or drain pan gasketing unless specified on the order.*

WARNING: DO NOT LIFT THE UNIT WITHOUT TEST LIFTING FOR BALANCE AND RIGGING. DO NOT LIFT THE UNIT IN WINDY CONDITIONS OR ABOVE PERSONNEL, DO NOT LIFT THE UNIT BY ATTACHING A CLEVIS, HOOKS, PINS OR BOLTS TO THE CASING, CASING HARDWARE, CORNER LUGS, ANGLES, TABS OR FLANGES. FAILURE TO OBSERVE THESE WARNINGS MAY RESULT IN PERSONAL INJURY OR DEATH OR EQUIPMENT DAMAGE.

NOTE: *On certain horizontal draw-thru units that ship from the factory in sections, a splash angle must be field installed connecting the coil section to the fan section. See Figure 9. The following units apply,*

- Horizontal D. T. Unit size 50 (with back vertical discharge).

- Horizontal D. T. Unit Size 63 (with front or back vertical discharge).

- Horizontal D. T. Unit size 63 (with extra length casing).

NOTE: *Check the bearing and sheave setscrews for proper torque settings. Refer to applicable section in this manual.*

Floor-Mounted — Horizontal Unit Sizes 3-50 and Vertical Unit Sizes 3-31. Ship from factory as one assembly (Fan Section, Coil Section and Drain Pan).

NOTE: *For optional coilless horizontal draw-thru units (size 3, 6, 8, 10, 14 and 21) refer to COIL INSTALLATION INSTRUCTIONS given in the installation manual to properly install coil in unit.*

1. Remove the diagonal shipping angles which secure coil(s) if they interfere with the use of access doors.
2. Attach accessories, if used. Gasketing not provided unless specified on sales order.
3. Anchor the isolators to the floor and mount the unit on the isolators. See Figure 3. For some applications it may be necessary to shorten the isolator adjusting bolt to properly secure unit to isolator.
4. Level the unit for proper coil drainage and condensate removal from the drain pan.
5. Connect the ductwork and necessary piping to the unit. Refer to applicable section in this manual.
6. Attach the motor, drives and motor splash pan if provided. If the motor was factory installed, check the bolts to make sure they are tight. Refer to the "Start-Up" section of the maintenance manual.

Note: All constant speed units are balanced at the factory at design rpm. If unit is to operate at more than 5% of design rpm a balance check and/or field rebalance will be necessary. Refer to "Start-Up" section in this manual.

Floor-Mounted — Horizontal Unit Sizes 63-86 and Vertical Unit Sizes 35-50. Ship from factory in 2 sections, (fan section and coil section).

NOTE: *On certain horizontal draw-thru units that ship from the factory in sections, a splash angle must be field installed connecting the coil section to the fan section. See Figure 9. The following units apply,*

- Horizontal D. T. Unit size 50 (with back vertical discharge).

- Horizontal D. T. Unit Size 63 (with front or back vertical discharge).

- Horizontal D. T. Unit size 63 (with extra length casing).

NOTE: *Check the bearing and sheave setscrews for proper torque settings. Refer to applicable section in this manual.*

1. Remove the diagonal shipping angles which secure coil(s) if they interfere with the use of access doors.
2. Fasten isolators to floor.
3. Horizontal Units Size 63 — To assemble multi-section horizontal units, remove the drain pan from the coil section discharge flange and set in place. Then set the fan and coil sections on the drain pan, as shown in Figure 5. Bolt the sections together, attach gasketing if supplied. Make sure that the coil section support channels are also attached to the fan section. Mount assembled unit on isolators and fasten unit to isolators.
4. Horizontal Units Size 73 and 86 — To assemble unit, mount the fan section on the isolators and fasten. Attach flexible connector to the fan section. Then fasten the splash guard to the fan section. See Figure 8. Mount the coil section on the base with the required distance between fan and coil sections. See Figure 7. Each fan section and coil section have separate factory assembled drain pans. Each drain pan must be trapped separately.

NOTE: *Coil section base is provided by the installer. Height of coil section base should be equal to working height of fan section isolators. Be sure the base is high enough to allow room for a piping trap. See Figure 7. Refer to drain trap sketches in piping section.*

Attach flexible connection to the coil section.

Fasten splash guard to coil section. Panel removal may be necessary to attach splash guard to coil section on size 86 units.

5. Vertical Units Size 35-50 — To assemble multi-section vertical discharge units, attach the fan section to the top of coil section. Removal of front panel on coil section is necessary to assemble fan section. Install gasketing if supplied. Drain pan is factory assembled to coil section. Mount assembled unit on isolators and fasten unit to isolators. See Figure 6.
6. Attach accessories, if used. Gasketing not provided unless specified on sales order.
7. Level the unit, fan and or coil sections to assure proper coil drainage and removal of condensate from the drain pan.

8. Connect the ductwork and necessary piping to the unit. Refer to applicable section in this manual.

9. Attach the motor, drives and motor splash pan if provided. If the motor was factory installed, check the bolts to make sure they are tight.

Floor-Mounted — Horizontal and Vertical Spray Coil Unit Sizes 3-31. Ship from factory as one assembly (Fan Section, Coil Section and Drain Pan).

WARNING: DO NOT LIFT THE UNIT WITHOUT TEST-LIFTING FOR BALANCE AND RIGGING. DO NOT LIFT THE UNIT IN WINDY CONDITIONS OR ABOVE PERSONNEL. DO NOT LIFT THE UNIT BY ATTACHING A CLEVIS, HOOKS, PINS OR BOLTS TO THE CASING, CASING HARDWARE, CORNER LUGS, ANGLES, TABS OR FLANGES. FAILURE TO OBSERVE THESE WARNINGS MAY RESULT IN PERSONAL INJURY OR DEATH OR EQUIPMENT DAMAGE.

NOTE: *The complete spray section is gasketed on all vertical and horizontal sizes. Also, the factory installs a gasket at the joint between the spray section and coil section.*

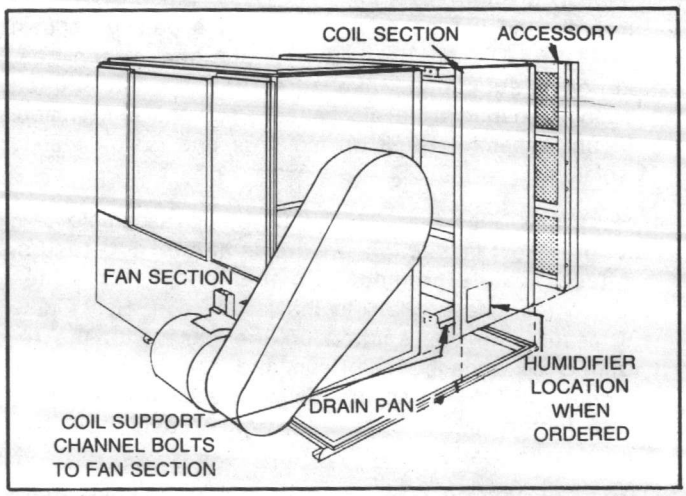

FIGURE 5 - Exploded View of the Horizontal Draw-Thru Unit Size 63

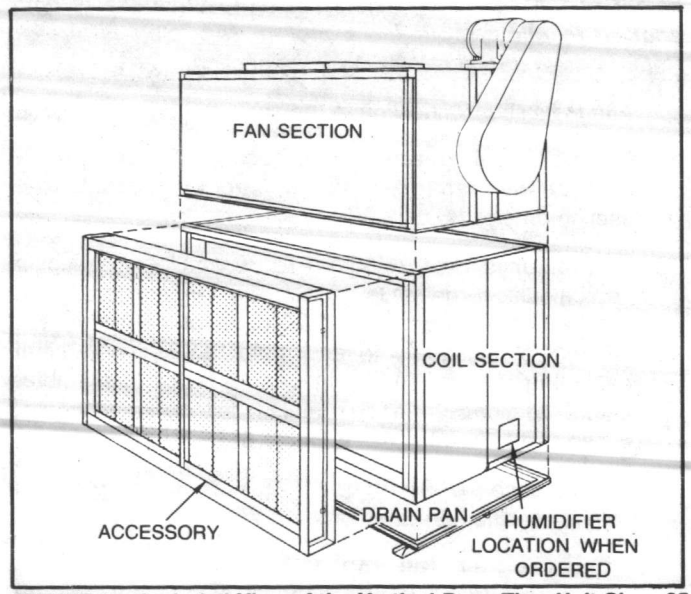

FIGURE 6 - Exploded View of the Vertical Draw-Thru Unit Sizes 35 through 50

NOTE: *Check the bearing, and sheave setscrews for proper torque settings. Refer to Applicable section in this manual.*

1. Remove the diagonal shipping angles which secure coil(s) if they interfere with the use of access doors.

2. Attach accessories, if used. Gasketing not provided unless specified on sales order.

3. Anchor the isolators to the floor and mount the unit on the isolators. See Figure 3. For some applications it may be necessary to shorten the adjusting bolt to properly secure unit to isolator.

4. Level the unit for proper coil drainage and condensate removal from the drain pan. On horizontal units the drain pan empties back into the sump.

5. Connect the ductwork and necessary piping to the unit. Refer to applicable section in this manual.

6. Attach the motor, drives and motor splash pan if provided. If the motor was factory installed, check the bolts to make sure they are tight. Refer to the "Start-Up" section of this manual.

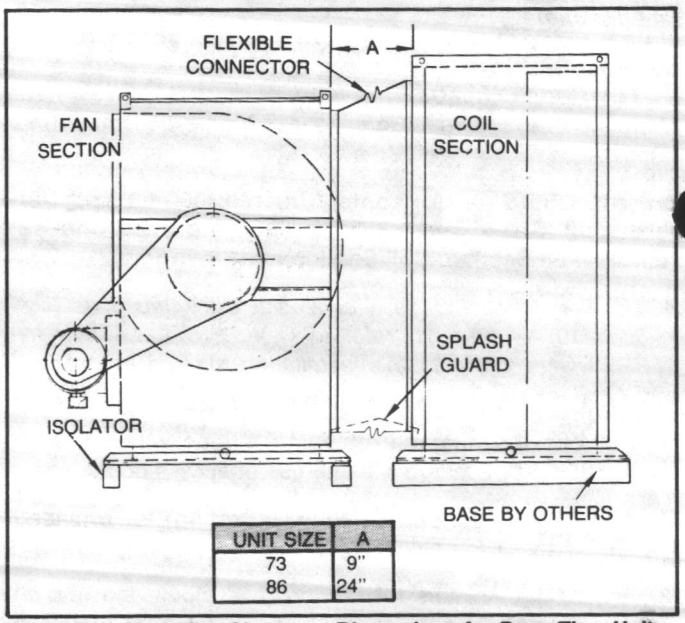

UNIT SIZE	A
73	9"
86	24"

FIGURE 7 - Mounting Clearance Dimensions for Draw-Thru Units Sizes 73-86

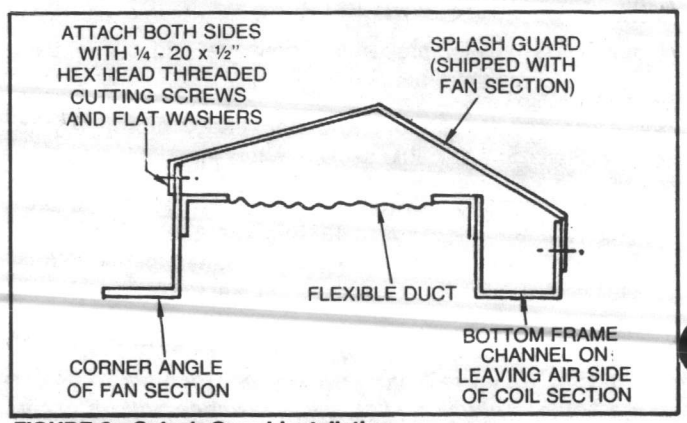

FIGURE 8 - Splash Guard Installation

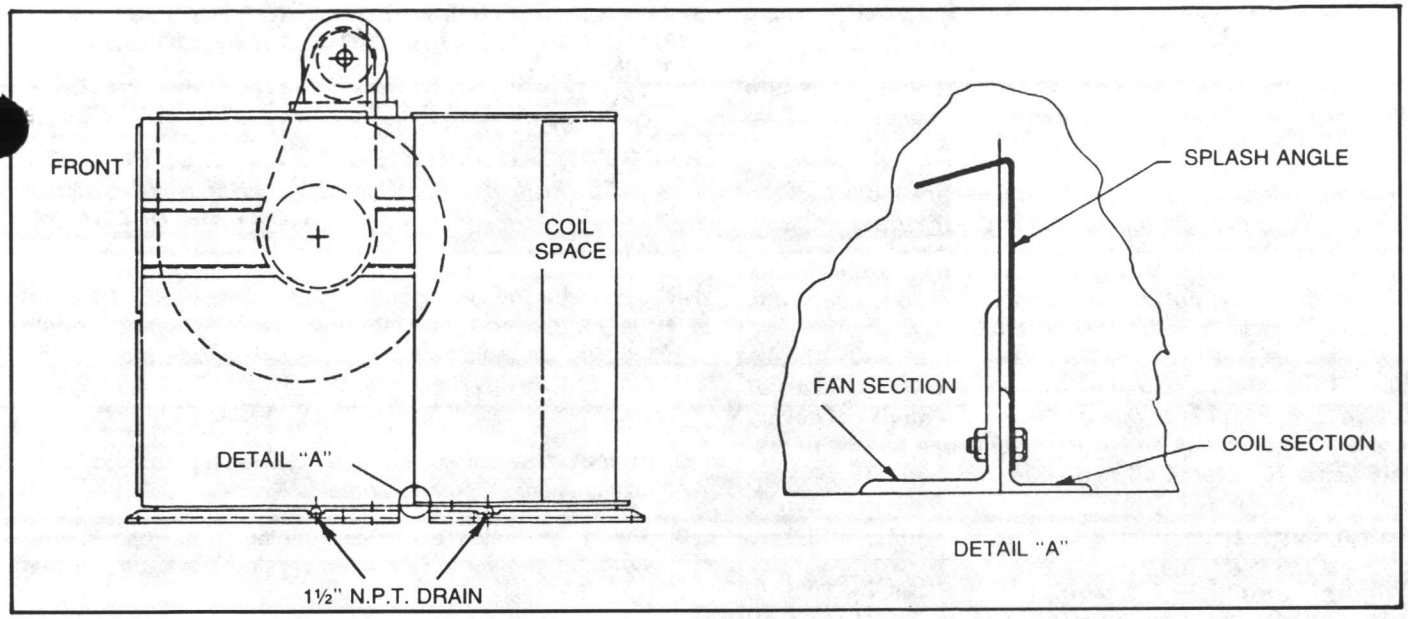

FIGURE 9 - Splash Angle Installation

Note: All constant speed units are balanced at the factory at design rpm. If unit is to operate at more than 5% of design rpm a balance check and/or field rebalance will be necessary. Refer to "Start-Up" section in this manual.

Floor-Mounted — Vertical Spray Coil Unit Sizes 35-50 ship from factory in 2 sections (fan section, coil section). Horizontal Spray Coil Unit Sizes 35-63 ship from factory in 3 sections (coil section, fan section, fan drain pan section). Horizontal Spray Coil Unit Sizes 73-86 ship from factory in 2 sections (fan section, coil section).

Note: The complete spray section is gasketed on all vertical and horizontal sizes. Also, the factory installs a gasket at the joint between the spray section and coil section.

NOTE: *Check the bearing and sheave setscrews for proper torque settings. Refer to applicable section in this manual.*

WARNING: DO NOT LIFT THE UNIT WITHOUT TEST-LIFTING FOR BALANCE AND RIGGING. DO NOT LIFT THE UNIT IN WINDY CONDITIONS OR ABOVE PERSONNEL. DO NOT LIFT THE UNIT BY ATTACHING A CLEVIS, HOOKS, PINS OR BOLTS TO THE CASING, CASING HARDWARE, CORNER LUGS, ANGLES, TABS OR FLANGES. FAILURE TO OBSERVE THESE WARNINGS MAY RESULT IN PERSONAL INJURY OR DEATH OR EQUIPMENT DAMAGE.

1. Remove the diagonal shipping angles which secure coil(s) if they interfere with the use of access doors.
2. Fasten isolators to floor.
3. Horizontal Units Size 35-63 — Attach the spray section to isolators. Fasten the two mounting legs to the fan section drain pan. Set the fan section on the drain pan and bolt in place. Attach the drain pan and fan section to the spray section. See Figure 10.
4. Horizontal Units Size 73 and 86 — To assemble unit, mount the fan section on the isolators and fasten. Attach flexible connector to the fan section. Mount the coil section on the base with the required distance between fan and coil sections. See Figure 7. Drain pan is factory assembled to each section.

NOTE: *Coil section base is provided by the installer. Height of coil section base should be equal to working height of fan section isolators. Be sure the base is high enough to allow room for a piping trap. See Figure 7. Refer to drain trap sketches in piping section.*

Attach flexible connection to the coil section.

5. Vertical Units Size 35-50 — Set the spray section over the isolators and bolt together. Place the fan section on top of the coil section and bolt together. Gasketing not provided between fan section and coil section unless specified on the sales order. Drain pan (sump assembly) is factory assembled to spray coil section.

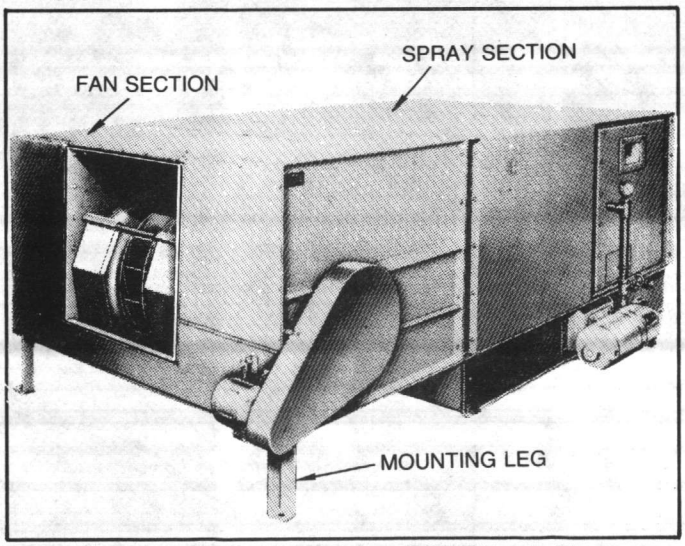

FIGURE 10 - Typical Horizontal Sprayed Coil Climate Changer

6. Attach accessories, if used. Gasketing not provided unless specified on sales order.

7. Level the unit, fan and or coil sections to assure proper coil drainage and removal of condensate from the drain pan.

8. Connect the ductwork and necessary piping to the unit. Refer to applicable section in this manual.

9. Attach the motor, drives and motor splash pan if provided. If the motor was factory installed, check the bolts to make sure they are tight.

Note: All constant speed units are balanced at the factory at design rpm. If unit is to operate at more than 5% of design rpm a balance check and/or field rebalance will be necessary. Refer to "Start-Up" section in this manual.

DRAW-THRU UNITS

Ceiling-Mounted — Horizontal Unit Sizes 3-31. Ship from factory as one assembly (Fan Section, Coil Section and Drain Pan).

NOTE: *For optional coilless horizontal draw-thru units (size 3, 6, 8, 10, 14 and 21) refer to COIL INSTALLATION INSTRUCTIONS given in CLCH-IN-1 to properly install coil in unit. On ceiling-mounted unit applications it is recommended to install coil in unit* ***before*** *hoisting unit to operating position.*

NOTE: *Check the bearing and sheave setscrews for proper torque settings. Refer to applicable section in this manual.*

Note: *All ceiling suspended units with wide coil application* ***must*** *use a cradle (angle iron). See Figure 11A for details.*

Note: *Because of their weight, unit sizes 3-31 (wide coil only) and 35-86 (wide coil and standard units) require suspension support frames, to be provided by the installer. Figures 11A, 12 and 13 give the configuration and dimension of these frames. Note that two frames are required for sizes 73 and 86. See Figure 13.*

WARNING: DO NOT LIFT THE UNIT WITHOUT TEST-LIFTING FOR BALANCE AND RIGGING. DO NOT LIFT THE UNIT IN WINDY CONDITIONS OR ABOVE PERSONNEL. DO NOT LIFT THE UNIT BY ATTACHING A CLEVIS, HOOKS, PINS OR BOLTS TO THE CASING, CASING HARDWARE, CORNER LUGS, ANGLES, TABS OR FLANGES. FAILURE TO OBSERVE THESE WARNINGS MAY RESULT IN PERSONAL INJURY OR DEATH OR EQUIPMENT DAMAGE.

1. Determine the unit mounting hole dimensions. Prepare the hanger rod and isolator assemblies and install them in the selected area. Threaded rods are recommended for leveling the unit. Tables 1, 2 and 3 list approximate operating weights. See Figure 11.

2. Attach accessories, if used. Gasketing not provided unless specified on sales order.

3. Attach the motor, drives and motor splash pan if provided. If the motor was factory installed, check the bolts to make sure they are tight.

Note: All constant speed units are balanced at the factory at design rpm. If unit is to operate at more than 5% of design rpm a balance check and/or field rebalance will be necessary. Refer to "Start-Up" section in this manual.

NOTE: *Check to determine that the motor is clean and dry prior to start-up.*

4. Hoist the unit to the hanger or suspension rods and attach. See Figure 11.

5. Level the unit for proper coil drainage and condensate removal from the drain pan. Refer to drain trap sketches in piping section.

6. Connect the ductwork and necessary piping to the unit. Refer to applicable section in this manual. Isolate piping separately.

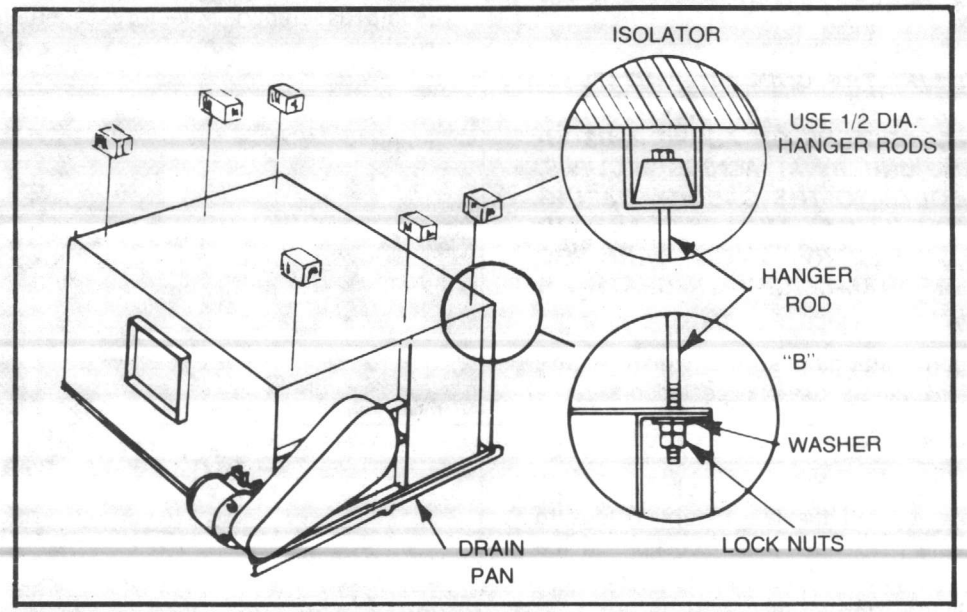

FIGURE 11 - Suspension Method for Horizontal Units Up to Size 31

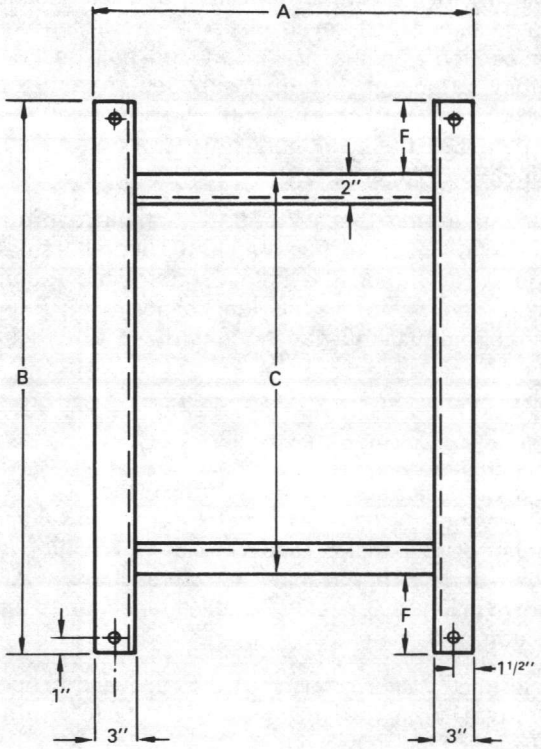

Vertical Dimensions (Inches) With Wide Coil

UNIT SIZE	A	B	C	F
3	23 7/8	54	34	10
6	23 7/8	75	55	10
8	28 7/8	66	46	10
10	28 7/8	75	55	10
12	32 7/8	81	61	10
14	32 7/8	90	70	10
17	32 7/8	111	91	10
21	36 7/8	129	109	10
25	42 7/8	135	115	10
31	42 7/8	135	115	10

Horizontal Dimensions (Inches) With Wide Coil

UNIT SIZE	A	B	C	F
3	32 3/4	54	34	10
6	34 3/4	75	55	10
8	44 3/4	66	46	10
10	44 3/4	75	55	10
12	48 3/4	81	61	10
14	48 3/4	90	70	10
17	48 3/4	111	91	10
21	52 3/4	129	109	10
25 Arr. 1 & 2	52 3/4	135	115	10
25 Arr. 3 & 4	58 3/4	135	115	10
31 Arr. 1 & 2	52 3/4	135	115	10
31 Arr. 3 & 4	58 3/4	135	115	10

Figure 11A — Ceiling Suspension Mounting Frame and Dimensions for Wide Coil Unit Sizes 3 thru 31.

CEILING-MOUNTED — Horizontal Unit Sizes 35-50 ship from factory as one assembly (fan section, coil section, and drain pan). Horizontal Unit Sizes 63-86 ship from factory in 2 sections (fan section and coil section).

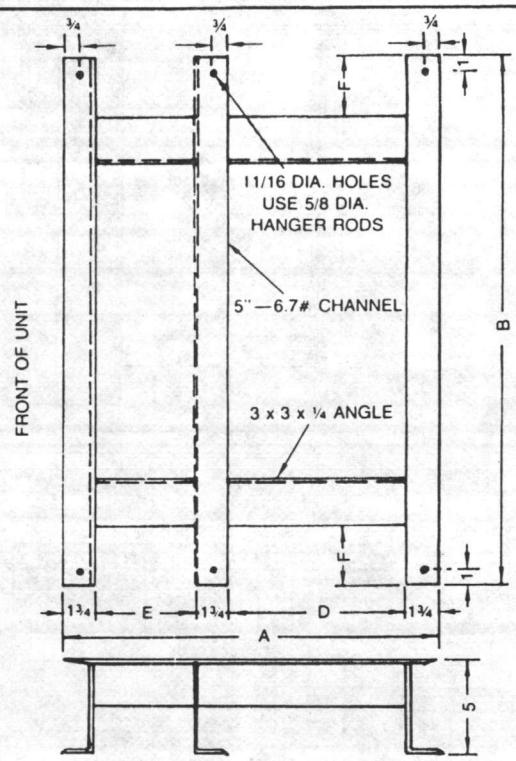

UNIT SIZE	DIMENSIONS (INCHES) A	B	D	E	F
#35	79 1/2	132 5/8	40 1/16	34 3/16	10 1/2
#41	84 1/2	135 5/8	43 1/16	36 3/16	10 1/2
#50	90 1/2	135 5/8	46 1/16	39 3/16	10 1/2
#63	97 1/2	143 5/8	50 1/16	42 3/16	14 1/2

DIMENSIONS (INCHES) WITH WIDE COIL					
UNIT SIZE	A	B	D	E	F
35	79 1/2	149 5/8	40 1/16	34 3/16	19 1/2
41	84 1/2	159 5/8	43 1/16	36 3/16	22 1/2
50	90 1/2	159 5/8	46 1/16	39 3/16	22 1/2
63	97 1/2	152 5/8	50 1/16	42 3/16	19 1/2

NOTE: Above sketch does not apply to Sprayed Coil Units.

FIGURE 12 - Ceiling Suspension Mounting Frame and Dimensions for Unit Sizes 35 to 63

NOTE: *On certain horizontal draw-thru units that ship from the factory in sections, a splash angle must be field installed connecting the coil section to the fan section. See Figure 9. The following units apply,*

- Horizontal D. T. Unit size 50 (with back vertical discharge).

- Horizontal D. T. Unit Size 63 (with front or back vertical discharge).

- Horizontal D. T. Unit size 63 (with extra length casing).

WARNING: DO NOT LIFT THE UNIT WITHOUT TEST LIFTING FOR BALANCE AND RIGGING. DO NOT LIFT THE UNIT IN WINDY CONDITIONS OR ABOVE PERSONNEL, DO NOT LIFT THE UNIT BY ATTACHING A CLEVIS, HOOKS, PINS OR BOLTS TO THE CASING, CASING HARDWARE, CORNER LUGS, ANGLES, TABS OR FLANGES. FAILURE TO OBSERVE THESE WARNINGS MAY RESULT IN PERSONAL INJURY OR DEATH OR EQUIPMENT DAMAGE.

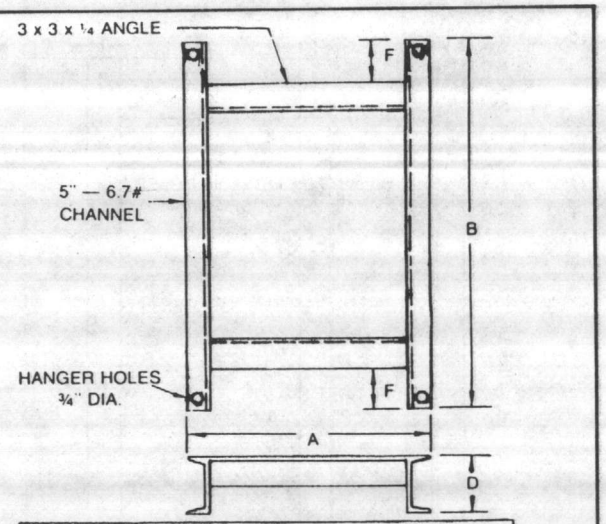

UNIT SIZE	DIMENSIONS (INCHES)							
	COIL SECTION				FAN SECTION			
	A	B	D	F	A	B	D	F
73	51	129-⅜	5	3-½	61	150-⅜	5	18
86	51	151-⅜	5	3-½	61	150-⅜	5	18

DIMENSIONS (INCHES) WITH WIDE COIL				
UNIT SIZE	A	B	D	F
73	51	146⅜	5	12
86	51	168⅝	5	12

NOTE: Fan section dimensions are same for std. units and/or units with wide coil.

FIGURE 13 - Ceiling Suspension Mounting Frame and Dimensions for Unit Sizes 73 and 86 (Two Frames are Required for Each Unit)

1. Determine the unit mounting hole dimensions. Prepare the hanger rod and isolator assemblies and install them in the selected area. Threaded rods are recommended for leveling the unit. Tables 1, 2 and 3 list approximate operating weights.
2. Remove the diagonal shipping angles which secure coil(s) if they interfere with the use of access doors.
3. Attach accessories, if used. Gasketing not provided unless specified on the sales order.
4. Attach the motor, drives and motor splash pan if provided. If the motor was factory installed, check the bolts to make sure they are tight. Refer to the "Start-Up" section of the maintenance manual.

Note: All constant speed units are balanced at the factory at design rpm. If unit is to operate at more than 5% of design rpm a balance check and/or field rebalance will be necessary. Refer to "Start-Up" section in this manual.

NOTE: *Check to determine that the motor is clean and dry prior to start-up.*

5. Horizontal Unit Sizes 3-50 — Attach the coil section support channels to the fan section base angles. Set the assembly on the prepared support frame. Reference Figures 11A and 12.
6. Horizontal Unit Size 63 — To assemble multi-section units, remove the drain pan from the coil section discharge flange and set in place. Then set the coil and fan sections on the drain pan and bolt sections together, attach gasketing if supplied. Attach the coil section support channels to the fan section base angles. Set the assembly on the prepared support frame. See Figure 12.
7. Horizontal Unit Sizes 73-86 — Set the coil and fan section on each of the prepared support frame. See Figure 13. Attach the splash guard and fasten the flexible connector to the fan section. See Figure 8. Panel removal may be necessary to attach splash guard.

   Each fan section and coil section have separate factory assembled drain pans.
8. Hoist the assembled unit or separate pieces with support frames and attach the support frames (sizes 3-86) to the hanger or suspension rods. For size 73-86 units, the required distance between fan and coil sections must be as shown in Figure 7. Attach flexible connection to the coil section.
9. Level the unit for proper coil drainage and condensate removal from the drain pan. Refer to drain trap sketches in piping section.
10. Connect the ductwork and necessary piping to the unit. Refer to applicable section in this manual. Isolate piping separately.

BLOW-THRU UNITS

Floor-Mounted — Three-Deck Unit Sizes 6-25 and Multizone Unit Sizes 6-31 ship from factory as one assembly (fan section, coil section w/drain pan and zone damper section).

WARNING: DO NOT LIFT THE UNIT WITHOUT TEST-LIFTING FOR BALANCE AND RIGGING. DO NOT LIFT THE UNIT IN WINDY CONDITIONS OR ABOVE PERSONNEL. DO NOT LIFT THE UNIT BY ATTACHING A CLEVIS, HOOKS, PINS OR BOLTS TO THE CASING, CASING HARDWARE, CORNER LUGS, ANGLES, TABS OR FLANGES. FAILURE TO OBSERVE THESE WARNINGS MAY RESULT IN PERSONAL INJURY OR DEATH OR EQUIPMENT DAMAGE.

NOTE: *Check the bearing and sheave setscrews for proper torque settings. Refer to applicable section in this manual.*

1. Fasten isolators to the floor.
2. Mount the unit on the isolators and fasten.
3. Install accessories.
4. Level the unit for proper coil drainage and condensate removal from the drain pan.
5. Connect the ductwork and necessary piping to the unit. Refer to applicable section in this manual.

   NOTE: *See Figure 30 for duct installation.*

6. *Attach the motor, drives and motor splash pan if provided. If the motor was factory installed, check the bolts to make sure they are tight.*

Floor-Mounted — Multizone Blow-Thru Unit Sizes 35-41 and Three Deck Unit Sizes 31-35 ship from factory in 3 sections (coil section, fan section and zone damper section).

NOTE: *Check the bearing and sheave setscrews for proper torque settings. Refer to applicable section in this manual.*

WARNING: DO NOT LIFT THE UNIT WITHOUT TEST-LIFTING FOR BALANCE AND RIGGING. DO NOT LIFT THE UNIT IN WINDY CONDITIONS OR ABOVE PERSONNEL. DO NOT LIFT THE UNIT BY ATTACHING A CLEVIS, HOOKS, PINS OR BOLTS TO THE CASING, CASING HARDWARE, CORNER LUGS, ANGLES, TABS OR FLANGES. FAILURE TO OBSERVE THESE WARNINGS MAY RESULT IN PERSONAL INJURY OR DEATH OR EQUIPMENT DAMAGE.

1. Fasten isolators to floor.
2. If ordered, mount zone damper assembly to discharge opening of coil section. First remove shipping angle in discharge opening. Attach zone damper with gasketing factory provided. Attach splitter panel (dividing plate) to zone damper. Gasketing not provided for dividing plate.

CAUTION: When installing the damper assembly to the hot deck and bypass section, make sure it is mounted squarely, otherwise the damper blades may twist and fail to operate.

3. Remove the 90° cover panel.
4. Apply gasketing to the fan section mounting flange.
5. Set the assembled coil and damper sections on the isolators and fasten in place.
6. Gain access thru the 90° cover panel (removed previously) and bolt the fan section to the coil section through the gasketing. Be sure to bolt the fan section to the tie angle assembly, mounted on the coil section.

NOTE: *Horizontal bolting across top and bottom of fan section to coil section require internal access through the 90° cover panel. Vertical bolting along side of fan section to coil section does not require internal access.*

7. Apply gasketing to the 90° cover panel.
8. Attach the coil section 90° cover panel.
9. Install accessories.
10. Level the unit for proper coil drainage and condensate removal from the drain pan.
11. Connect the ductwork and necessary piping to the unit. Refer to applicable section in this manual.

NOTE: *See Figure 30 for duct installation.*

12. Attach the motor, drives and motor splash pan if provided. If the motor was factory installed, check the bolts to make sure they are tight.

Note: All constant speed units are balanced at the factory at design rpm. If unit is to operate at more than 5% of design rpm a balance check and/or field rebalance will be necessary. Refer to "Start-Up" section in this manual.

Floor-Mounted — Multizone Blow-Thru Unit Sizes 50-63 ship from factory in 4 sections (fan section, cooling coil section, heating coil section and zone damper section). Refer to Figure 15.

NOTE: *Check the bearing and sheave setscrews for proper torque settings. Refer to applicable section in this manual.*

WARNING: DO NOT LIFT THE UNIT WITHOUT TEST-LIFTING FOR BALANCE AND RIGGING. DO NOT LIFT THE UNIT IN WINDY CONDITIONS OR ABOVE PERSONNEL. DO NOT LIFT THE UNIT BY ATTACHING A CLEVIS, HOOKS, PINS OR BOLTS TO THE CASING, CASING HARDWARE, CORNER LUGS, ANGLES, TABS OR FLANGES. FAILURE TO OBSERVE THESE WARNINGS MAY RESULT IN PERSONAL INJURY OR DEATH OR EQUIPMENT DAMAGE.

1. Fasten isolators to floor.
2. Remove the shipping angles attached to the front or top of the coil section.
3. Vertical Discharge Units: Place hot deck on top of cold deck and bolt in place with gasketing factory provided. The front panel of coil section ships attached across the discharge opening. It must be removed and installed with gasketing to the front of the coil section. (This does not apply to horizontal discharge units.) Next, bolt the splitter panel (dividing plate) to the panel over the cooling coil.
4. Horizontal Discharge Units: Place the hot deck on top of cold deck and bolt in place with gasketing factory provided. Next, bolt the splitter panel (dividing plate) to the panel over the cooling coil.
5. Apply gasketing to the damper section or double-duct frame. Refer to Figure 14. Gasketing is not required at the center of the damper section where the dividing plate will be fastened.
6. Assemble the damper or double duct frame to the coil section bolting through the gasketing.

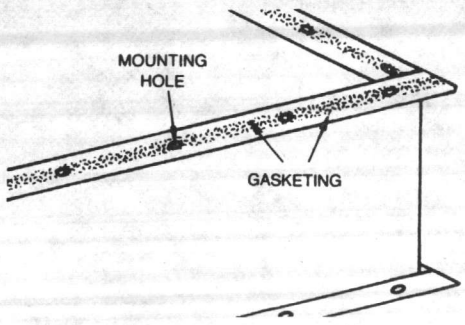

FIGURE 14 - Installation of Gasketing on the Damper Section

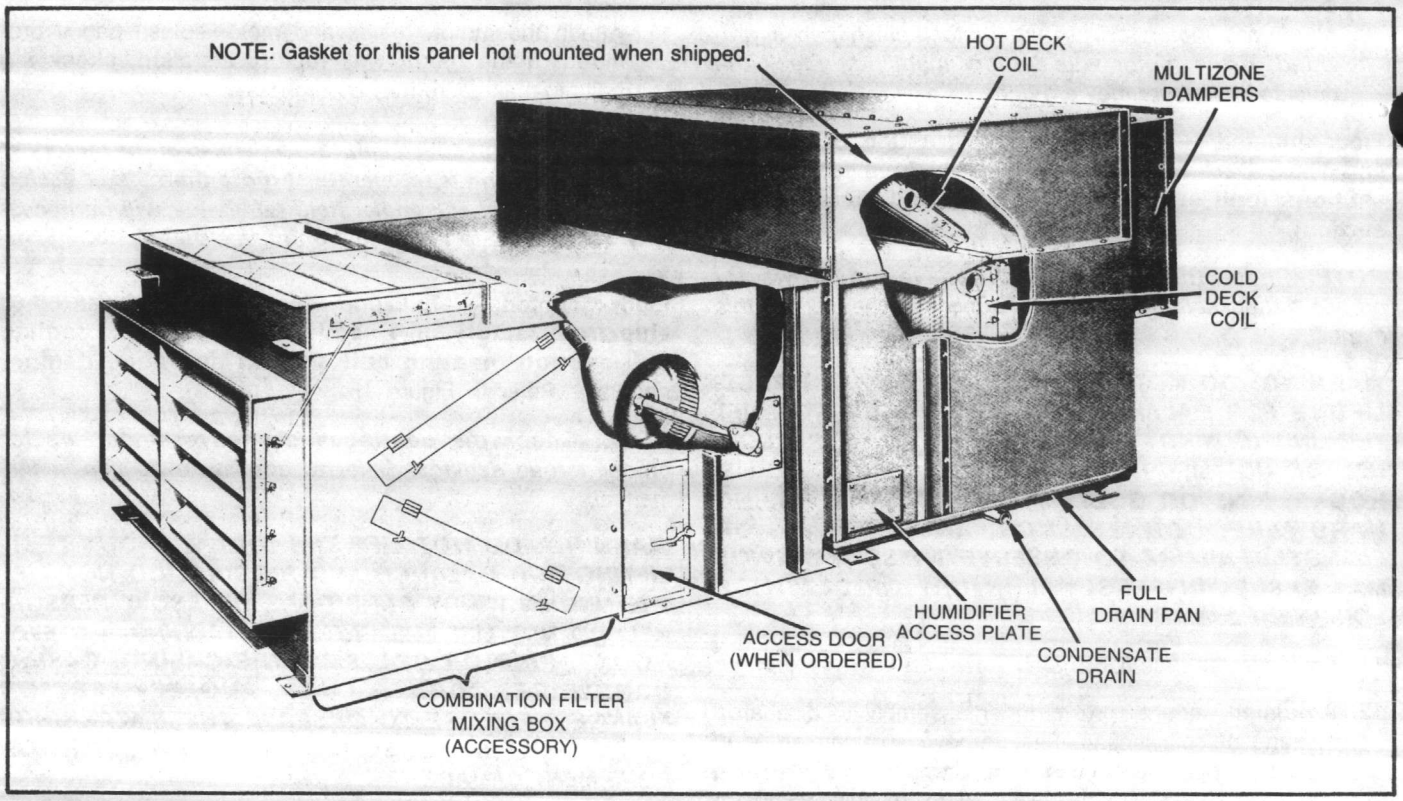

FIGURE 15 - Multizone Blow-Thru Climate Changers

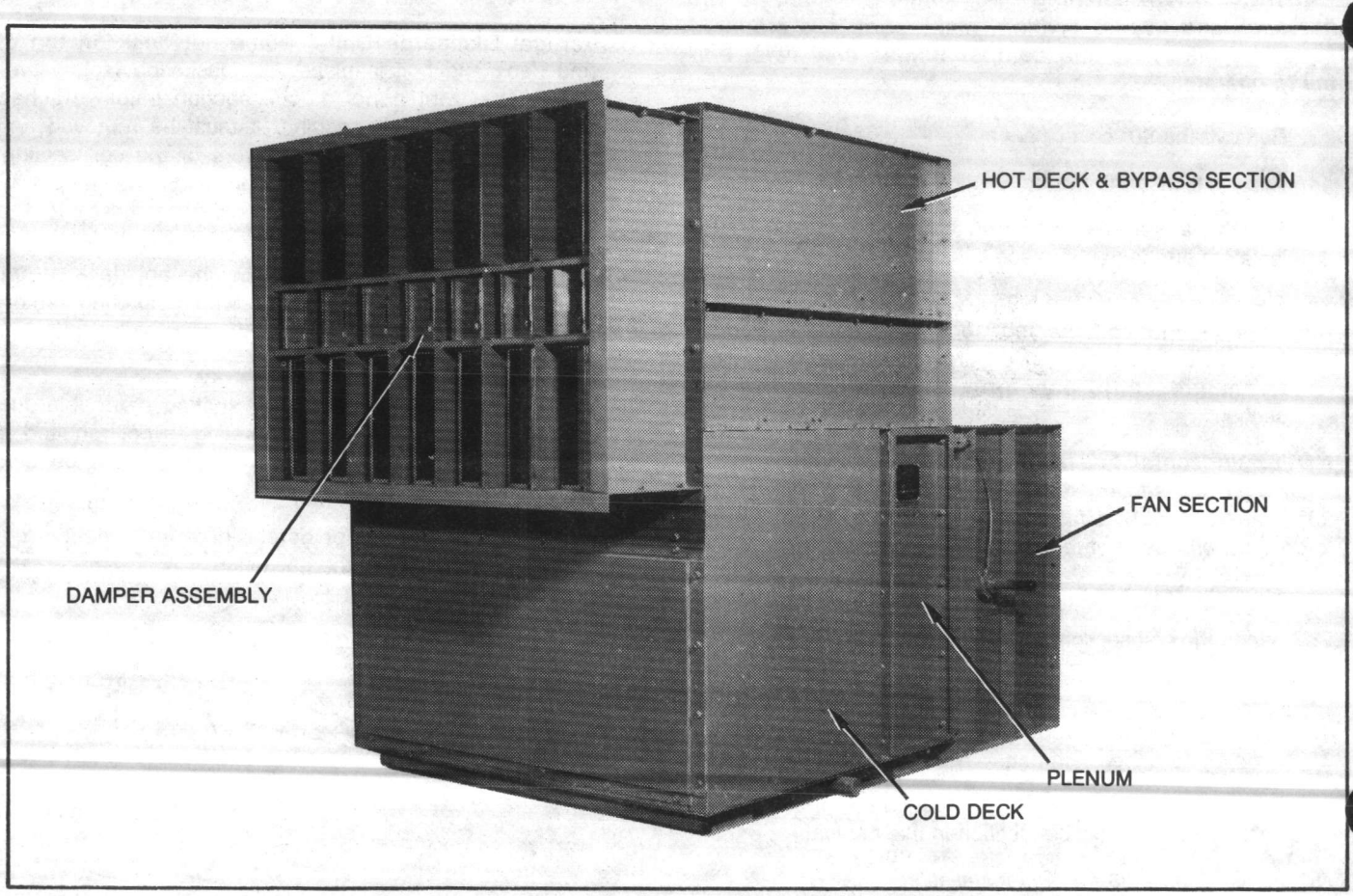

FIGURE 16 - Typical Three Deck Horizontal Discharge Climate Changer

CAUTION: When installing the damper assembly to the hot deck and bypass section, make sure it is mounted squarely, otherwise the dampers may twist and fail to operate.

7. Bolt the hot and cold deck dividing plate to the center of the damper section.
8. Remove the 90° cover panel of the coil section.
9. Apply gasketing to the fan section mounting flange. Set the assembled coil and damper sections on the isolators and fasten in place.
10. Gain access thru the 90° cover panel (removed previously) and bolt the fan section to the coil section through the gasketing. Be sure to bolt the fan section to the tie angle assembly mounted on the coil section.

Note: Horizontal bolting across top and bottom of fan section to coil section requires internal access through the 90° cover panel. Vertical bolting along side of fan section to coil section does not require internal access.

11. Apply the gasketing to the 90° cover panel.
12. Attach the coil section 90° cover panel.
13. Install accessories.
14. Level the unit for proper coil drainage and condensate removal from the drain pan.
15. Connect the ductwork and necessary piping to the unit. Refer to applicable section in this manual.
16. Attach the motor, drives and motor splash pan if provided. If the motor was factory installed, check the bolts to make sure they are tight. Refer to the "Start-Up" section of this manual.

Note: All constant speed units are balanced at the factory at design rpm. If unit is to operate at more than 5% of design rpm a balance check and/or field rebalance will be necessary. Refer to "Start-Up" section in this manual.

Floor-Mounted — Three Deck Blow-Thru Unit Sizes 41-63 ship from factory in 4 sections (cooling coil section, fan section, vent and heating coil section, and zone damper section). See Figure 16 for assembly.

NOTE: *Check the bearing and sheave setscrews for proper torque settings. Refer to applicable section in this manual.*

WARNING: DO NOT LIFT THE UNIT WITHOUT TEST-LIFTING FOR BALANCE AND RIGGING. DO NOT LIFT THE UNIT IN WINDY CONDITIONS OR ABOVE PERSONNEL. DO NOT LIFT THE UNIT BY ATTACHING A CLEVIS, HOOKS, PINS OR BOLTS TO THE CASING, CASING HARDWARE, CORNER LUGS, ANGLES, TABS OR FLANGES. FAILURE TO OBSERVE THESE WARNINGS MAY RESULT IN PERSONAL INJURY OR DEATH OR EQUIPMENT DAMAGE.

1. Fasten the isolators to the floor.
2. With gasketing applied to the top of the cooling coil section, mount the hot deck and bypass section to the cooling coil section. Bolt the bypass deck divider plate to the panel over the cooling coil.
3. Remove the shipping angles used to support the hot deck and bypass zone divider plates.
4. Vertical Discharge Units — Apply gasketing to the mounting flange of the fill-in section and mount the fill-in section to the cooling, bypass and hot deck section.
5. Apply gasketing to the damper assembly. See Figure 14. Gasketing is not required at the center of the damper section where the divider plate will be fastened.
6. Attach the damper section to the coil section, bolting through the gasketing.

CAUTION: When installing the damper assembly to the hot deck and bypass section, make sure it is mounted squarely, otherwise the damper blades may twist and fail to operate.

NOTE: *Be sure control rods are in correct position.*

7. Bolt the hot deck and bypass zone divider plates to the center dividers of the damper assembly. These must be bolted from the hot deck and cold deck side only. Gasketing not required.
8. Remove the 90° cover panel of the coil section.
9. Apply gasketing around the fan section mounting flange.
10. Set the assembled coil and damper sections over the isolators. Fasten in place.
11. Gain access thru the 90° cover panel (removed previously) and bolt the fan section to the coil section through the gasketing. Be sure to bolt the fan section to the tie angle assembly mounted on the coil section.

NOTE: *Horizontal bolting across top and bottom of fan section to coil section require internal access through the 90° cover panel. Vertical bolting along side of fan section to coil section does not require internal access.*

12. Apply the gasketing to the 90° cover panel.
13. Attach the coil section 90° cover panel.
14. Attach any accessories.
15. Level the unit for proper coil drainage and condensate removal from the drain pan.
16. Connect the ductwork and necessary piping to the unit. Refer to applicable section in this manual.
17. Attach the motor, drives and motor splash pan if provided. If the motor was factory installed, check the bolts to make sure they are tight. Refer to the "Start-Up" section of this manual.

Floor-Mounted — Multizone Blow-Thru Unit Sizes 73-86 ship from factory in 6 sections (fan section, cooling coil section, heating coil section, canvas duct section, inlet panel (size 73), extended plenum (size 86), and either double duct frame section or zone damper section).

NOTE: *Check the bearing and sheave setscrews for proper torque settings. Refer to applicable section in this manual.*

WARNING: DO NOT LIFT THE UNIT WITHOUT TEST-LIFTING FOR BALANCE AND RIGGING. DO NOT LIFT THE UNIT IN WINDY CONDITIONS OR ABOVE PERSONNEL. DO NOT LIFT THE UNIT BY ATTACHING A CLEVIS, HOOKS, PINS OR BOLTS TO THE CASING, CASING HARDWARE, CORNER LUGS, ANGLES, TABS OR FLANGES. FAILURE TO OBSERVE THESE WARNINGS MAY RESULT IN PERSONAL INJURY OR DEATH OR EQUIPMENT DAMAGE.

1. Fasten isolators to the floor.
2. Remove the shipping angles attached to the front or top of the coil section.
3. Vertical Discharge Units: Place hot deck on top of cold deck and bolt in place with gasketing, factory provided. The front panel of coil section ships attached across the discharge opening. It must be removed and installed with gasketing to the front of the coil section. (This does not apply to horizontal discharge units.) Next, bolt the splitter panel (dividing plate) to the panel over the cooling coil.
4. Horizontal Discharge Units: Place the hot deck on top of cold deck and bolt in place with gasketing factory provided. Next, bolt the splitter panel (dividing plate) to the panel over the cooling coil.
5. Apply gasketing to the damper section or double-duct frame. Refer to Figure 14. Gasketing is not required at the center of the damper section where the dividing plate will be fastened.
6. Assemble the damper or double duct frame to the coil section bolting through the gasketing.

CAUTION: When installing the damper assembly to the hot deck and bypass section, make sure it is mounted squarely, otherwise the damper blades may twist and fail to operate.

7. Bolt the hot and cold deck dividing plate to the center of the damper section.
8. Attach inlet panel (size 73) or extended plenum (size 86) to coil section inlet with gasketing, factory provided. Bolting for these sections is accomplished from exterior of the unit. See Figure 17.
9. Attach flex connector between fan section and coil section (size 73). Attach flex connector between fan section and extended plenum coil section (size 86). Refer to Figure 17 for dimensions.
10. Level the unit, fan and/or coil sections to assure proper coil drainage and removal of condensate from the drain pan.
11. Connect the ductwork and necessary piping to the unit. Refer to applicable section in this manual.
12. Attach the motor, drives and motor splash pan if provided. If the motor was factory installed, check the bolts to make sure they are tight.

NOTE: *All constant speed units are balanced at the factory at design rpm. If unit is to operate at more than 5% design rpm a balance check and/or field rebalance will be necessary. Refer to the "Start-Up" section.*

HIGH PRESSURE CLIMATE CHANGER — ALL SIZES

NOTE: *Check the bearing and sheave setscrews for proper torque settings. Refer to applicable section in this manual.*

WARNING: DO NOT LIFT THE UNIT WITHOUT TEST-LIFTING FOR BALANCE AND RIGGING. DO NOT LIFT THE UNIT IN WINDY CONDITIONS OR ABOVE PERSONNEL. DO NOT LIFT THE UNIT BY ATTACHING A CLEVIS, HOOKS, PINS OR BOLTS TO THE CASING, CASING HARDWARE, CORNER LUGS, ANGLES, TABS OR FLANGES. FAILURE TO OBSERVE THESE WARNINGS MAY RESULT IN PERSONAL INJURY OR DEATH OR EQUIPMENT DAMAGE.

1. Attach the mounting legs (Spray Coil Units only) and spring isolators to the fan section, as illustrated in Figure 18.
2. Set the fan section in place and fasten isolators to the floor.
3. Blow-Thru Units — Apply factory provided gasketing to the sections where canvas duct is to be attached.
4. Set the coil section in place. Attach the flexible connection. Place the bottom flange of the flexible connection in the V channel of the coil section.
5. Attach the splash guard to the bottom of the fan inlet opening, as in Figure 8.
6. Attach flexible connection to the fan section. Place the bottom flange of the flexible connection in the V channel of the fan section. Tighten bolts from exterior of the unit.
7. Blow-Thru Units — Attach horizontal tension restraints (installer-supplied) to the coil section. Span the flexible connection and anchor the restraints to the fan section. See Figure 17. These restraints will counteract reaction forces due to airflow and will relieve pressure from the flexible connection.
8. Install accessories.
9. Level the unit, fan and/or coil sections to assure proper coil drainage and removal of condensate from the drain pan.
10. Connect the ductwork and necessary piping to the unit. Refer to applicable section in this manual.
11. Attach the motor, drives and motor splash pan if provided. If the motor was factory installed, check the bolts to make sure they are tight.

Note: All constant speed units are balanced at the factory at design rpm. If unit is to operate at more than 5% of design rpm a balance check and/or field rebalance will be necessary. Refer to "Start-Up" section in this manual.

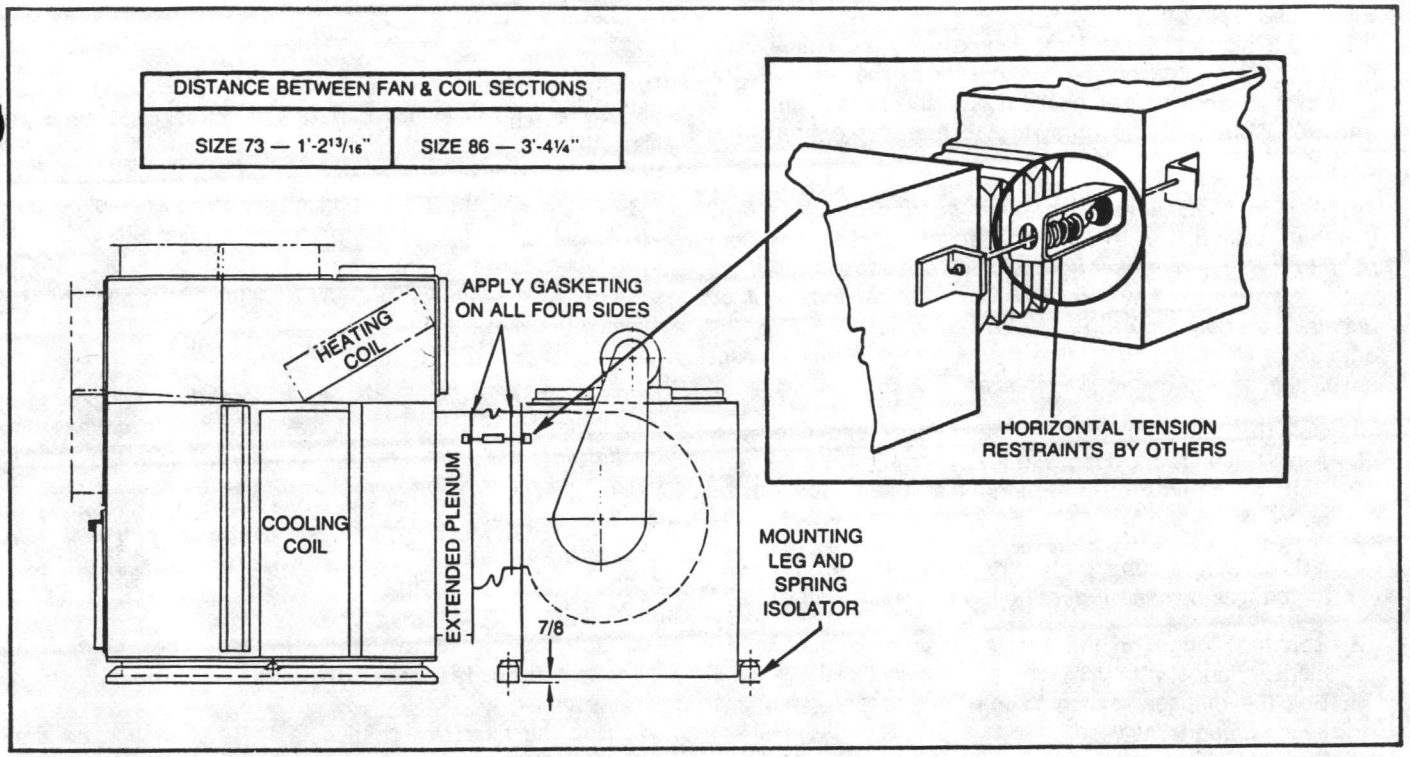

FIGURE 17 - Fan and Coil Section Ductwork Connections for Blow-Thru High Pressure Units

ACCESSORIES

Matching bolt holes are provided on all accessories for attachment to the unit or to other accessories. Mounting hardware is shipped with each accessory. Mounting legs on filter boxes and mixing boxes are to be attached to isolators and fastened to the floor or suspension device.

HIGH EFFICIENCY BAG FILTER

Before installing the bag filter accessory, be sure adequate clearance is provided to open the filter box and remove filters. Four feet of clearance on the access side of the filter section is recommended. Table 3 lists filter, filter section and diffuser section weights.

The high efficiency bag filter can be used as a prefilter when placed on the inlet side of the fan, a final filter when placed on the outlet of the fan, or as both when placed in both locations. When used as a prefilter, the canvas duct and diffuser sections are not used, but isolators should be installed by the contractor to ease vibration. When used as a final filter, the canvas duct and diffuser sections are used, but isolators are not required. Installation instructions for both applications follow.

NOTE: *The high efficiency bag filters can be operated at up to 100 percent relative humidity, but must not make direct contact with water droplets. Care must be taken to ensure that these filters are not used as prefilters with Sprayed Coil Climate Changers and to avoid water carryover in standard units.*

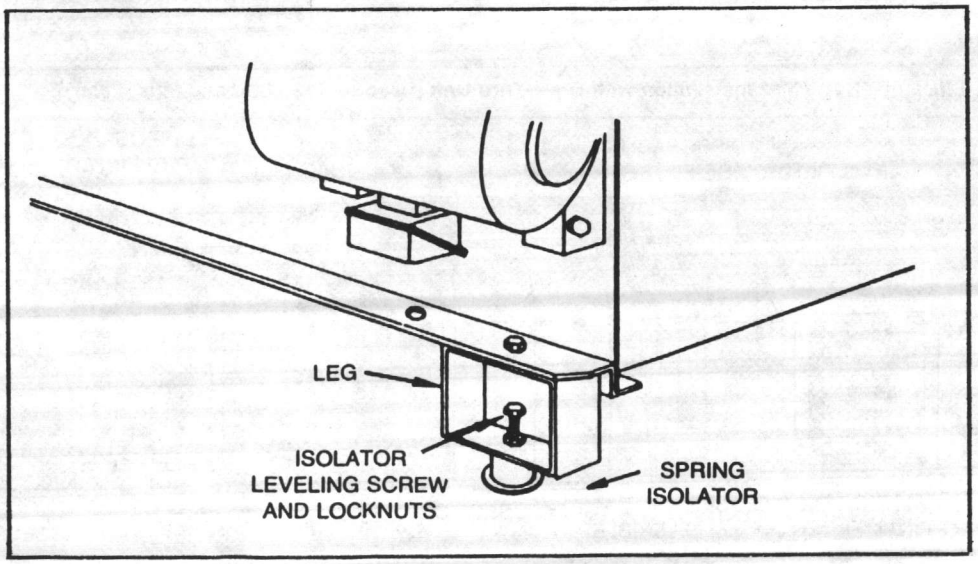

FIGURE 18 - Attaching the Mounting Leg and Spring Isolator to the High Pressure Sprayed Coil Unit

Final Filter Section

When the high efficiency bag filter is used as a final filter, it must be mounted on the outlet side of the fan with the canvas duct and diffuser sections, as shown in Figures 19 and 20. Complete the following to install the final filter section:

NOTE: *The final filter and prefilter section on sizes 6-86 can be installed with a right side or left side access door by flipping the filter section to desired access door location. Proper air flow direction thru filter section must be maintained. See Figure 19. Note that on size 3 units the access door is predetermined according to sales order specifications and cannot be modified.*

1. Bolt the mounting legs to the diffuser and filter sections. Bolts are provided with the assemblies.
2. Bolt the canvas discharge duct to the flange on the outlet side of the fan.

   NOTE: *Single-zone blow-thru units are shipped with the canvas discharge duct bolted to the fan flange.*

3. Bolt the flange on the canvas discharge duct to the diffuser flange, with gasketing properly installed.
4. Bolt the diffuser section to the filter section, with gasketing properly installed.
5. For U.L. listed units, the canvas discharge duct is not provided. Install a field-provided connector which meets the requirements of NFPA 90A Sect. 2.1.1 to 2.1.2.3.
6. Level the unit.

Prefilter Section

When the high efficiency bag filter is to be used as a pre filter, it must be mounted to the coil section of a draw-thru unit or to the inlet side of the fan on a blow-thru unit. See Figures 19 and 20. Field-supplied isolators should be used on the filter section mounting legs to control vibration. The bag filter is not designed to be used as a prefilter on Sprayed Coil Climate Changers. Complete the following to install a prefilter section:

NOTE: *The final filter and prefilter section on sizes 6-86 can be installed with a right side or left side access door by flipping the filter section to desired access door location. Proper air flow direction thru filter section must be maintained. See Figure 19. Note that on size 3 units the access door is predetermined according to sales order specifications and cannot be modified.*

1. Bolt the mounting legs to the filter box section and attach isolators. Bolts are provided with the assemblies.
2. Bolt the filter box section to the coil section on draw-thru units, or to the fan inlet with gasketing installed on blow-thru units.
3. Level the unit.

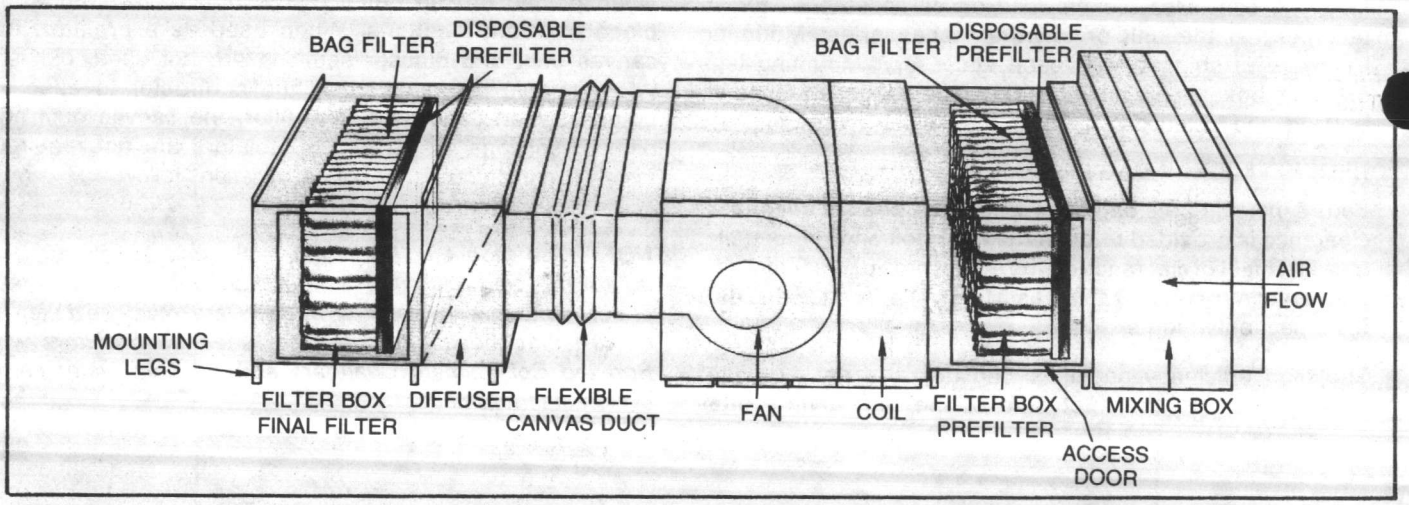

FIGURE 19 - High Efficiency Bag Filter Installation with Draw-Thru Unit (Used as Pre-Filter and Final Filter)

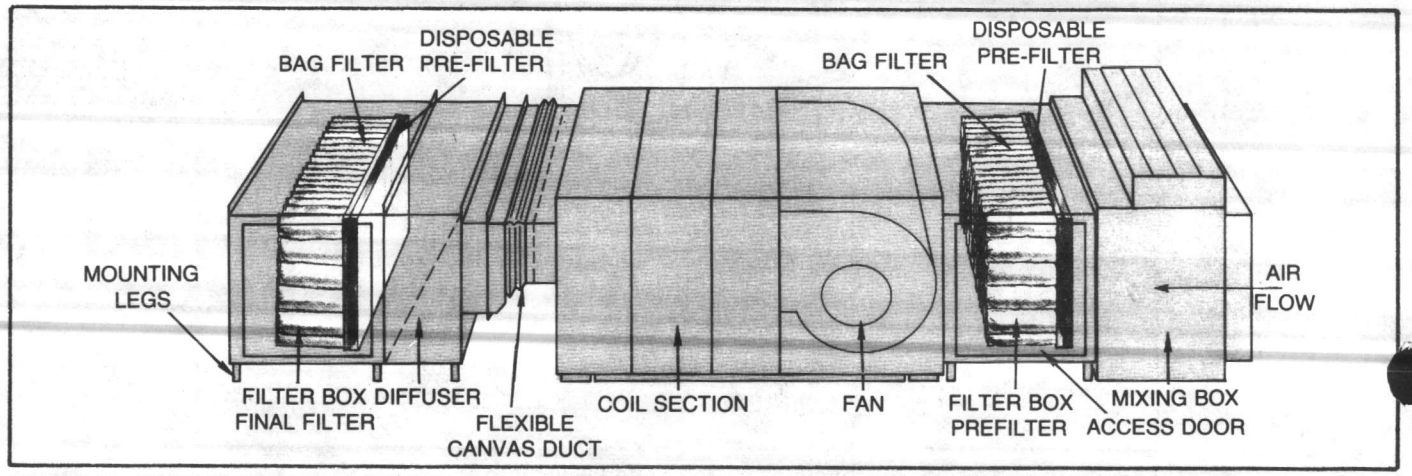

FIGURE 20 - High Efficiency Bag Filter Installation with Single-Zone Blow-Thru Unit (Used as Pre-Filter and Final Filter)

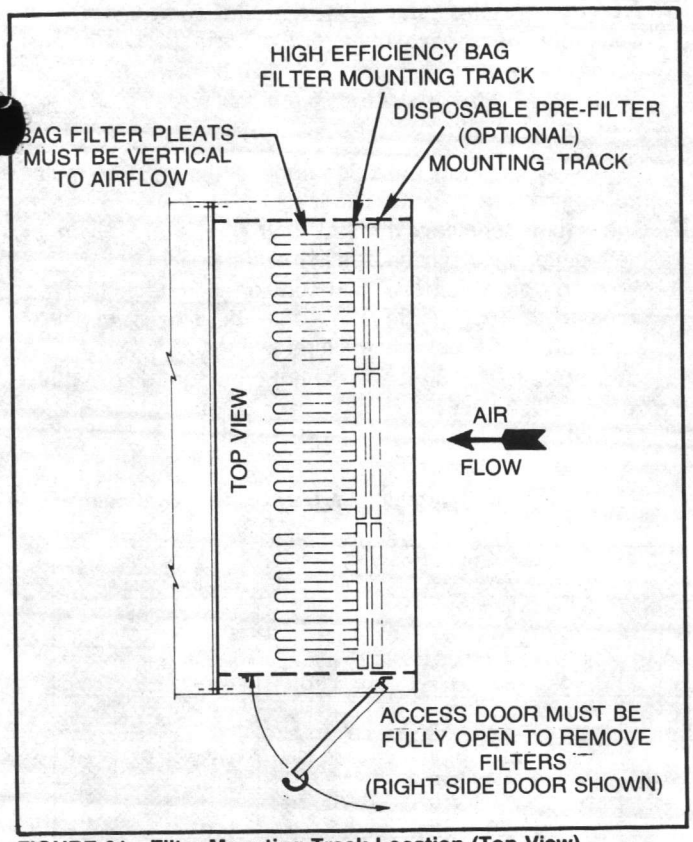

FIGURE 21 - Filter Mounting Track Location (Top View)

Filter Installation

Trane recommends the use of disposable prefilters with high efficiency bag filters. Prefilters slide into mounting tracks just ahead of the bag filter. Bag filter and prefilter size and quantity requirements are the same. See Figure 21 for filter arrangement and complete the following:

1. Ensure power is disconnected. Open filter section access door.

   WARNING: DISCONNECT POWER SOURCE BEFORE OPENING FILTER SECTION ACCESS DOOR. FAILURE TO DO SO MAY RESULT IN INJURY OR DEATH FROM ELECTRICAL SHOCK, HIGH PRESSURE OR MOVING PARTS.

2. Remove adjustable blockoff from filter track.
3. Slide bag filters and flat prefilters into the appropriate filter tracks. Bag filters must be installed with pleats vertical to airflow.
4. Slide adjustable blockoff into filter track.
5. Close the access door. If door can be closed without compressing the filters, adjust the blockoff by loosening its adjusting screws, moving the blockoff and tightening the screws. The door should squeeze the blockoff against the filters, compressing them.

NOTE: *Filters must have an airtight seal to prevent air bypass. If using other filters, apply foam gasketing to the vertical edges of the filter-holding frame to ensure a tight fit.*

For roll filter installation and operation checks, refer to RF-IM-1.

MANOMETER INSTALLATION

A manometer should be used with each bag filter accessory to monitor filter loading and is available from Trane. It should be located to read the pressure drop between the inlet and outlet of the filters. A 1-inch wg pressure difference indicates clogged filters.

WARNING: BAG FILTER FINAL RESISTANCE IS 1 INCH WATER GAUGE. FAILURE TO CHANGE BAG FILTERS AT THIS POINT MAY CAUSE PERSONAL INJURY, DEATH OR EQUIPMENT DAMAGE AS FILTERS WITH DUST MAY BE COMBUSTIBLE.

Five feet of double-column plastic tubing is provided with the gauge along with adapters for connection to 1/8" NPT fittings. To install the manometer, complete the following:

1. Mount the manometer in the two 27/64-inch diameter holes drilled in top or side wall of the filter box, using the self-tapping screws provided. Turn the screws down snug, but not tight.
2. Adjust the gauge until the bubble is centered in the spirit level. Tighten the mounting screws and check to be sure that the gauge remained level.
3. Turn the zero adjust knob counterclockwise until it stops. Then turn it clockwise approximately three full turns so that there is room for adjustment in either direction.
4. Remove the fill plug and pour in the provided gauge fluid until the fluid level is visible in the vicinity of zero on the scale. Adjust for exact zero setting with the zero knob and replace the fill plug.
5. Install a tubing adapter on each side of the filter.
6. Connect the coded red striped tube to the high pressure connection at the top of the gauge (left side) and insert the other end into the field-drilled port and adapter upstream of the bag filters.
7. Connect the uncoded tube to the low side connection at the top of the gauge (right side) and insert the other end into the field-drilled port and adapter downstream of the filter bags.

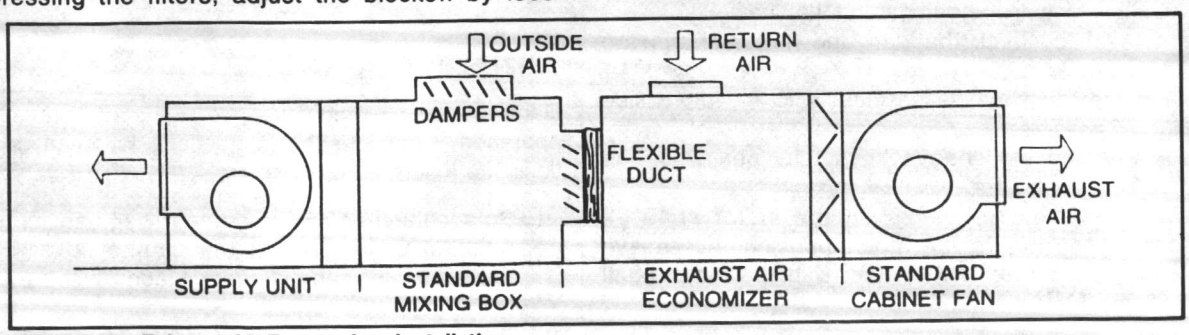

FIGURE 22 - Exhaust Air Economizer Installation

EXHAUST AIR ECONOMIZER

The Exhaust Air Economizer system consists of the economizer section and a Cabinet Fan. The accessory is attached to a Climate Changer with a standard or combination mixing box accessory, as shown in Figure 22. Cabinet Fan size should be identical to Climate Changer size, except as noted below.

NOTE: *Unit sizes 35 to 63 can use either the same size Cabinet Fan or a size 31 Cabinet Fan.*

The economizer section contains a single damper set, similar to a face damper, which is used to prevent backwheeling of the exhaust fan when it is shut off. Low leak and Ultra-low leak dampers can be used on the damper assembly. Refer to the Dampers section of this manual for operating torques.

CAUTION: To avoid equipment damage, the pressure differential across the damper must not exceed 3 inches during operation.

To install the Exhaust Air Economizer, complete the following:

1. Bolt the Exhaust Air Economizer to the Cabinet Fan with the bolts and gasketing provided.
2. If the unit is floor-mounted, fasten the isolators to the floor and mount the accessory on the isolators. If the unit is ceiling-mounted, follow proper safety precautions and hoist the accessory into position, attaching it to the hanger rods.
3. Attach the contractor supplied canvas duct to the mixing box flange with sheet metal screws (not provided).
4. Screw the canvas duct flange onto the economizer section flange from inside the economizer with sheet metal screws (not provided).
5. Attach the return air intake to the economizer section.
6. Level the unit. Secure all fasteners.

FAN MOTOR ASSEMBLY

On units that ship motors separately, the fan shafts, sheaves and drive assembly must be checked and aligned before unit operation. Complete the following:

WARNING: DISCONNECT ELECTRICAL POWER BEFORE INSPECTING FAN MOTOR ASSEMBLY. FAILURE TO DO SO MAY RESULT IN INJURY OR DEATH FROM ELECTRICAL SHOCK OR MOVING PARTS.

1. Check that the fan shafts fully penetrate the bore of sheaves or sheave bushings. Bushed sheaves should have the bushing flange outboard of the sheave.
2. Use a level to check that fan and motor shafts are level and parallel.
3. Position the fan sheaves as closely to the drive side bearing as possible.
4. Check that the fan sheave keys fully penetrate the bushing or sheave bore.
5. Position the motor sheaves on the motor shaft as closely as possible to the motor housing. All sheave setscrews must make full contact with the motor shaft or shaft key.

NOTE: *In some cases, motor shafts may not fully penetrate the sheave bore, but the sheave width must never exceed the recommended maximum per NEMA (MG1-14.43 a) for the respective motor size.*

6. Align sheaves with a straightedge or string. For multigroove sheaves, align center lines.
7. Check belt tension. Detailed instructions are given in the Maintenance section of this manual.
8. When properly aligned and tensioned, check that no point on the belt nearest the drive bearing is within 1/2-inch of unit flanges or structural supports.
9. After drive components have been positioned correctly, tighten all sheave setscrews to the torque values given Table 4.

Table 4 - Torques for Tightening Locking Screws, Bearings and Sheaves

TORQUE FOR TIGHTENING SETSCREWS				TORQUE FOR TIGHTENING SEALMASTER LOCKING COLLAR				
SET SCREW DIA.	HEX SIZE ACROSS FLATS	RECOM. TORQUE INCH LBS.	RECOM. TORQUE FOOT LBS.	COL-LAR	SCREW DIA.	HEX SIZE ACROSS FLATS	RECOM. TORQUE INCH LBS.	RECOM. TORQUE FOOT LBS.
1/4"	1/8"	66	5.5	2-015B	8-32	1/8"	70	5.8
5/16"	5/32"	126	10.5	2-13B	8-32	1/8"	70	5.8
3/8"	3/16"	228	19.0	2-17B	10-24	9/64"	90	7.5
7/16"	7/32"	348	29.0					
1/2"	1/4"	504	42.0					
5/8"	5/16"	1,104	92.0					

NOTE: Tighten bearing setscrews to the torque shown before running unit. Setscrews can loosen in shipment.

DAMPERS

DRIVE ROD ASSEMBLY — BLOW-THRU MULTIZONE UNITS

On all Blow-Thru Multizone units, the zone damper drive rods are recessed to prevent damage during shipment. Before attaching ductwork, complete the following steps and then set the damper zones as instructed after this list. Refer to Figures 23 to 24B.

1. Loosen the damper rod clip screws and extend each drive rod 2-1/2 inches beyond the edge of the damper assembly flange. See Figure 23.
2. Check each set of damper blades to make sure that they are at 90-degree angles to each other. Move the dampers to be sure they are not binding.
3. Tighten all damper rod clip screws.
4. Under certain operating conditions, condensate may form on the cold deck portion of the damper section. To prevent this, insulate around the damper rods. Be sure that the insulation does not affect damper operation.

SETTING THE DAMPERS

Dampers on all units must be adjusted to ensure proper operation. Complete the instructions for each damper section. See Figure 24A.

1. Select the number of damper segments required for the first zone. Loosen the damper lever set screws and turn all of the damper blades within the zone to the same position.

2. Tighten the damper lever set screws for this zone.
3. Cut the damper linkage bar at the last lever. Figure 24A illustrates an example that uses two damper segments.
4. Set all other zones with the same procedure given above.

NOTE: *Damper operators must be connected to damper drive rods on the linkage side of the zone damper section.*

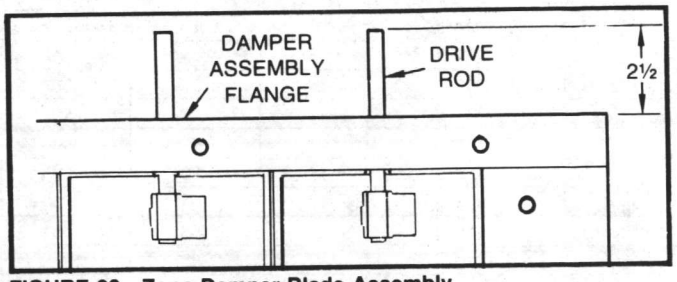

FIGURE 23 - Zone Damper Blade Assembly

DAMPER OPERATORS

Damper operators, levers and linkages, if not factory provided, are to be provided and installed by the contractor. Tables 5 through 8 list approximate values of damper torques to size the damper operators. When two motors are required, use synchronous motors. See Table 8A for actuator torques used with Multizone and 3-Deck Multizone damper units.

To install the operators, connect the motor to the damper drive rods on the linkage side of the zone damper section. Mount damper levers as close to the side of the unit as possible.

High-efficiency mixing box damper torques, given in Table 8, will vary with blade position (percent open), damper arrangement (top/back or top/bottom), pressure differential, cfm conditions and installation. The values given in Table 8 represent the maximums for all of the above conditions up to 0.4 inches of pressure difference and at a blade setting of 25 to 75 percent open. Greater pressure differences or incorrect adjustment will not be compensated for.

When low leak and ultra-low leak dampers are installed, operators should be sized according to operating torques given in Tables 5 through 7. Since low leak and ultra-low leak damper operating torques are much higher than those for standard dampers, care must be taken to choose a properly sized operator. Stroke distance from full-closed to full-open is 90 degrees.

Low leak dampers with blade seal material, should not be installed in positions where temperatures might exceed 150 F.

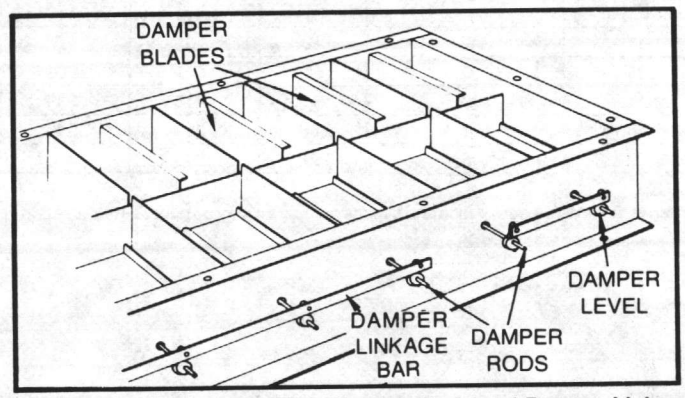

FIGURE 24A - Setting the Zone Damper Rods and Damper Linkage

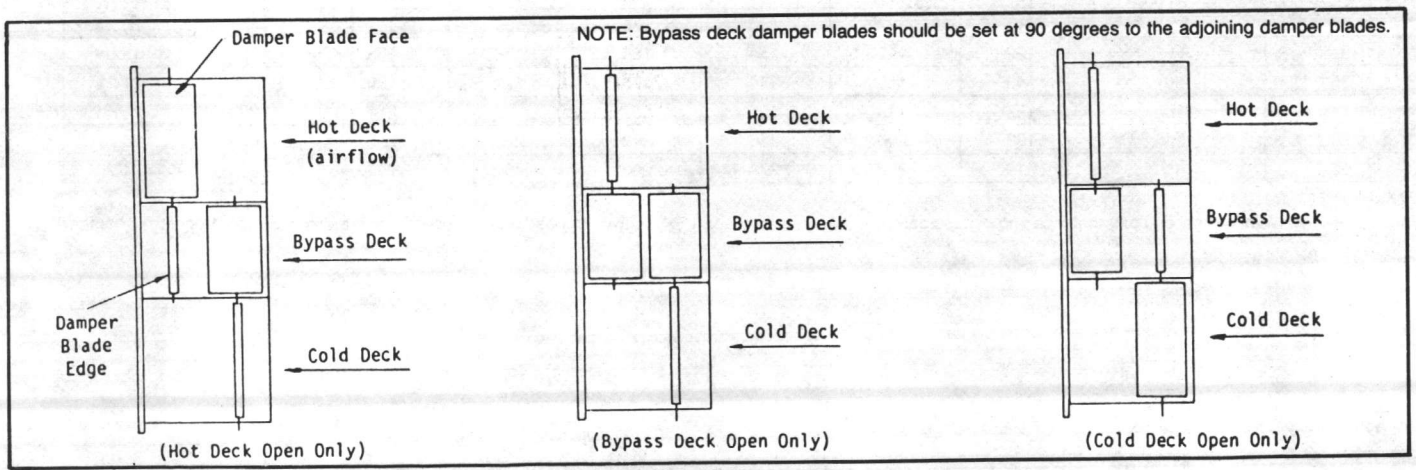

FIGURE 24B - Proper Three-Deck Multizone Damper Blade Configuration

TABLE 5 - External Face and Bypass Low Leak Damper Torques (In./Lbs.)

UNIT	STANDARD	LOW LEAK DAMPER				ULTRA-LOW LEAK DAMPER			
SIZE	DAMPER	1" ΔP	2" ΔP	3" ΔP	4" ΔP	1" ΔP	2" ΔP	3" ΔP	4" ΔP
3	30	36	37	39	41	39	41	43	44
6	33	43	47	50	53	50	54	57	60
7	33	43	47	50	52	49	53	56	59
8	35	47	52	56	59	55	60	64	67
9	36	47	51	55	58	54	58	62	65
10	36	52	58	63	67	62	68	73	77
12	38	67	65	71	76	70	77	83	88
14	40	63	71	79	85	77	86	94	100
17	42	68	78	87	93	85	95	103	110
21	77	108	120	131	139	128	141	151	159
25	84	121	136	149	159	146	161	173	183
31	93	142	161	177	190	174	193	210	222
35	100	159	182	202	217	198	221	241	256
41	110	190	216	239	256	234	261	283	300
50	124	214	250	280	304	273	310	339	363
63	145	259	305	343	373	335	381	419	449

NOTE:
On larger units with external face and bypass dampers it may be necessary to use two opposed damper operators to avoid excessive bending of damper shaft linkage.

TABLE 6 - Internal Face and Bypass Low Leak Damper Torques (In./Lbs.)

UNIT	STANDARD	LOW LEAK DAMPER				ULTRA-LOW LEAK DAMPER			
SIZE	DAMPER	1" ΔP	2" ΔP	3" ΔP	4" ΔP	1" ΔP	2" ΔP	3" ΔP	4" ΔP
3	30	33	35	36	37	35	37	38	39
6	33	40	43	45	47	44	47	49	51
7	33	39	42	44	46	44	46	48	50
8	35	45	48	52	54	51	55	58	60
9	36	44	46	49	51	48	51	54	56
10	36	48	53	57	60	56	61	65	68
12	38	52	57	62	65	61	66	71	74
14	40	56	63	68	72	67	73	78	83
17	42	62	70	77	82	76	84	90	96
21	77	101	111	119	125	118	127	135	142
25	84	111	122	130	138	129	139	148	155
31	93	129	143	154	164	152	166	178	187
35	100	143	160	174	186	171	188	203	214
41	110	159	179	195	208	192	212	228	241
50	124	183	206	226	242	222	245	265	281
63	145	219	249	274	293	269	298	323	343

NOTE:
On larger units with internal and external face and bypass dampers it may be necessary to use two opposed damper operators to avoid excessive bending of damper shaft linkage.

TABLE 7 - Mixing Box, Combination Filter Mixing Box Low Leak Damper Torques (In./Lbs.)

UNIT	STANDARD	LOW LEAK DAMPER				ULTRA-LOW LEAK DAMPER			
SIZE	DAMPER	1" ΔP	2" ΔP	3" ΔP	4" ΔP	1" ΔP	2" ΔP	3" ΔP	4" ΔP
3	7	11	13	14	15	14	15	17	18
6	9	16	18	20	22	20	23	25	27
7	10	17	20	23	25	22	25	27	29
8	11	20	23	26	28	25	29	32	34
9	12	20	23	25	27	25	28	30	32
10	13	24	28	32	35	31	35	39	42
12	14	27	32	37	40	35	41	45	48
14	16	31	38	43	47	42	48	53	57
17	18	36	44	50	54	48	56	62	67
21	40	62	71	78	84	77	85	93	98
25	47	73	83	91	98	90	100	108	115
31	57	87	99	109	117	107	119	129	137
35	64	99	112	124	133	122	135	147	156
41	74	114	130	144	154	141	157	170	181
50	89	139	158	174	188	171	191	207	221
63	110	169	192	212	227	208	231	251	266

NOTE:
On larger units with internal and external face and bypass dampers it may be necessary to use two opposed damper operators to avoid excessive bending of damper shaft linkage.

TABLE 8 - High Efficiency Mixing Box Damper Torque

UNIT SIZE	TORQUE (FT.-LBS.) AT 0.4" ΔP 25 TO 75% OPEN
3	0.65
6	1.10
8	1.50
10	1.85
12	2.25
14	2.70
17	3.15
21	3.75
25	4.50
31	5.30
35	6.20
41	7.20
50	9.10
63	10.75

TABLE 8A — Multizone and Three-Deck — Multizone Zone Damper — Actuator Torques (In./Lbs)

UNIT SIZE	3	6	8	10	12	14	17	21	25	31	35	41	50	63
Torque (In./Lbs)	27	29	31	32	33	34	36	38	41	45	48	51	57	66

VARIABLE INLET GUIDE VANES

Inlet vanes are used to regulate fan capacity and to reduce horsepower at lower system requirements.

Inlet guide vane operator motors, if not factory provided, are to be provided and installed by the contractor, according to the operating torques given in Tables 9, 10, and 11. Control lever stroke and radius is given in Figure 25.

Before operation, check the vanes and assembly for freedom of movement. If resistance above the torques given in Tables 9, 10 and 11 is encountered, check for vane damage or linkage misalignment. **Do not force the vanes.** See Figure 25 for typical inlet vane operation. Figures 26 and 27 illustrate FC and AF inlet vanes.

TABLE 9 - Torque and Force Required to Operate Inlet Vanes - AF Fans - Unit Sizes 35-86

UNIT SIZE	TO OPEN OR CLOSE INLET VANES	FAN OUTLET VELOCITY 2,000 FPM TORQUE (IN.-LBS.)	2,000 FPM FORCE (LBS.)	3,000 FPM TORQUE (IN.-LBS.)	3,000 FPM FORCE (LBS.)
35	Open	70.0	7.7	158.0	16.7
	Close	17.0	1.9	39.0	4.3
41	Open	94.0	10.3	214.0	23.5
	Close	23.0	2.6	53.0	5.9
50	Open	128.0	14.1	287.0	31.5
	Close	31.0	3.4	71.0	7.8
63	Open	172.0	18.9	388.0	42.6
	Close	42.0	4.6	96.0	10.6
73	Open	172.0	18.9	388.0	42.6
	Close	42.0	4.6	96.0	10.6
86	Open	172.0	18.9	388.0	42.6
	Close	42.0	4.6	96.0	10.6

When automatic vane control is used, adjustment must be made to avoid forcing the vanes past either the full-open or full-closed positions. A locking lever is furnished if the inlet vanes are to be used with manual control.

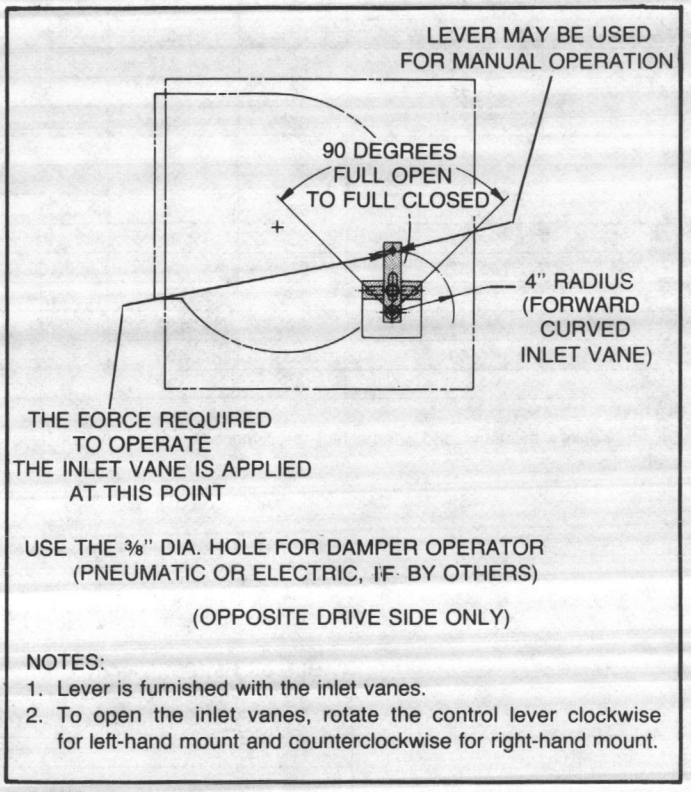

NOTES:
1. Lever is furnished with the inlet vanes.
2. To open the inlet vanes, rotate the control lever clockwise for left-hand mount and counterclockwise for right-hand mount.

FIGURE 25 - Inlet Vane Operation

TABLE 10 - Torque and Force to Operate Inlet Vanes - FC Fans - Unit Sizes 6-31

NO. OF FANS AND FAN SIZE	TO OPEN OR CLOSE INLET VANES	FAN OUTLET VELOCITY 2,000 FPM TORQUE (IN.-LBS.)	2,000 FPM FORCE (LBS.) 4" ARM	3,000 FPM TORQUE (IN.-LBS.)	3,000 FPM FORCE (LBS.) 4" ARM
1-10½	Open	5.7	2.2	19.6	5.1
	Close	2.9	0.8	6.5	1.9
1-12¼	Open	10.0	2.5	22.5	5.7
	Close	3.5	0.9	7.8	2.1
1-13½	Open	10.9	2.8	24.5	6.2
	Close	3.9	1.0	8.7	2.3
1-15	Open	14.1	3.6	31.9	8.0
	Close	5.0	1.3	11.4	3.0
1-16½	Open	18.0	4.5	40.5	10.3
	Close	6.4	1.6	14.4	3.7
1-18¼	Open	23.1	5.8	52.2	13.3
	Close	8.3	2.1	18.6	4.8
1-20	Open	24.0	6.0	54.0	13.7
	Close	9.0	2.3	19.5	5.1
1-22	Open	25.0	6.3	56.0	14.2
	Close	9.5	2.4	21.0	5.3
1-25	Open	26.5	6.7	59.7	15.1
	Close	10.0	2.5	22.5	5.6
2-13½	Open	21.8	5.5	49.1	12.4
	Close	7.8	2.0	17.5	4.6
2-15	Open	28.3	7.1	63.9	16.0
	Close	10.1	2.6	22.8	5.7
2-16½	Open	36.0	9.0	81.1	20.3
	Close	12.8	3.2	28.9	7.3
2-18¼	Open	46.3	11.6	104.4	26.3
	Close	16.5	4.2	37.3	9.4
2-20	Open	48.0	12.0	108	27.2
	Close	18.0	4.5	39.0	9.9

TABLE 11 - Torque and Force Required to Operate Inlet Vanes — FC Fans — Unit Sizes 35-63

UNIT SIZE	FAN SIZE	TO OPEN OR CLOSE INLET VANES	FAN OUTLET VELOCITY					
			2000 FPM		3000 FPM		4000 FPM	
			TORQUE (IN.-LBS.)	FORCE* (LBS.)	TORQUE (IN.-LBS.)	FORCE* (LBS.)	TORQUE (IN.-LBS.)	FORCE* (LBS.)
35	25	Open	26.5	6.7	59.7	15.1	—	—
		Close	10.0	2.5	22.5	5.6	—	—
	27	Open	115	29	190	48	240	60
		Close	40	10	90	23	140	35
41	27	Open	115	29	190	48	240	60
		Close	40	10	90	23	140	35
	30	Open	120	30	200	50	260	65
		Close	50	13	100	25	150	38
50	30	Open	120	30	200	50	260	65
		Close	50	13	100	25	150	38
63	30	Open	120	30	200	50	260	65
		Close	50	13	100	25	150	38

*NOTE: Force is calculated using a 4" lever arm.

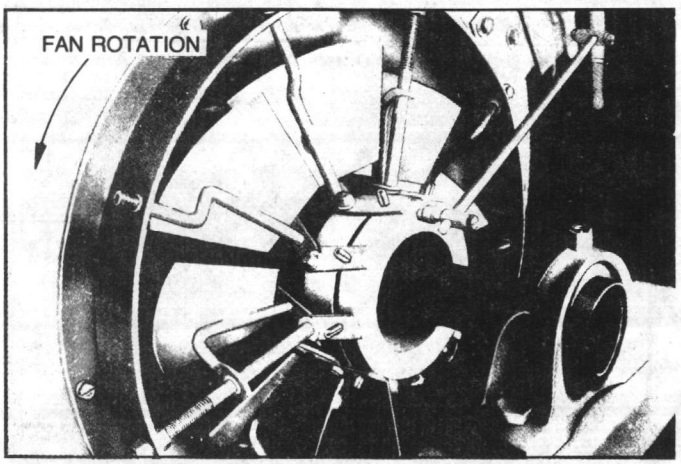

FIGURE 26 - Forward Curved Inlet Vanes

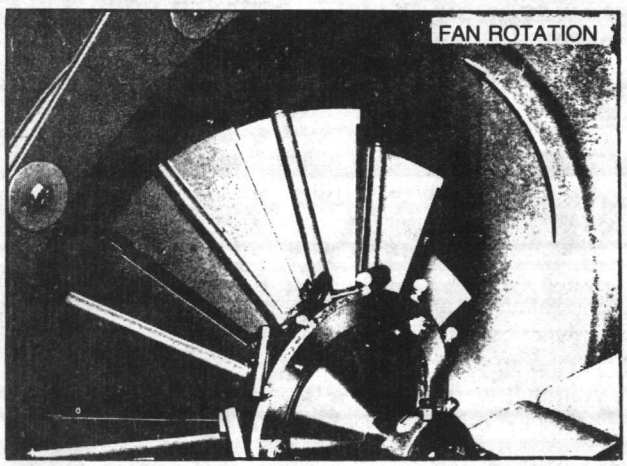

FIGURE 27 - Airfoil Inlet Vanes

DUCT CONNECTIONS

All air ducts should be installed in accordance with the standards of the National Fire Protection Association for the Installation of Air Conditioning and Ventilating Systems Other than Residence Type (NFPA 90A), and Residence Type Warm Air Heating and Air Conditioning Systems (90B).

NOTE: *Installations that have supply ductwork without return ductwork may be restricted by local codes to serve a space exceeding 25,000 cubic feet in volume.*

All inlet and discharge air duct connections to the unit should be made with a flexible material. Typically, about three inches is needed for this connection to rigid ductwork. Do not draw the flexible material tight; leave it sufficiently loose to prevent the transmission of any noise or vibration to the ductwork.

Duct turns and transitions must be made carefully to minimize air friction losses. Avoid sharp turns and use splitters or turning vanes when elbows are necessary, as shown in Figure 28. Make turns in the same direction of rotation as the fan. Discharge ductwork should run in a straight line, unchanged in size or direction, for at least a distance of 1-1/2 fan diameters. See Figure 28.

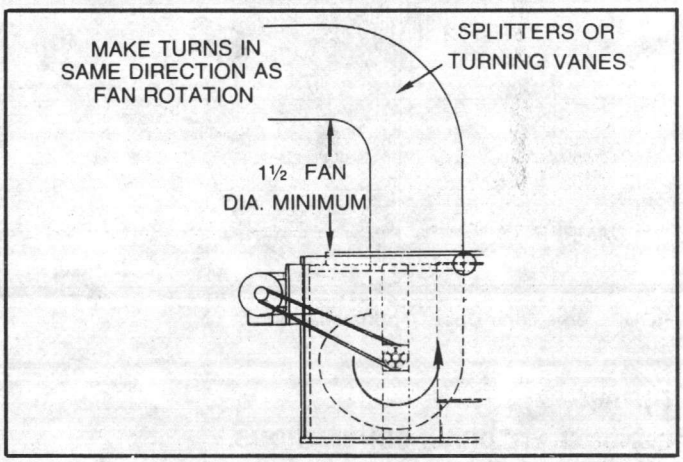

FIGURE 28 - Discharge Ductwork Recommendations

On two-fan units, both fan discharge openings should be jointed to a common duct after the recommended length of straight run. Figure 29 illustrates a proper duct run that will prevent unequal handling of air by the fans. Maximum duct transition should be 30 degrees. The included angle between joining ducts should not exceed 60 degrees. If necessary, split the duct at any point beyond the common connection.

For multizone units, zone duct clips are provided for attaching the ductwork to each zone. Refer to Figure 30. Inset the clips on the damper partitions as required for the number of zones. Approximately 7/16-inches of space will be left between each zone when the duct collar is placed in the duct clip.

NOTE: *When attaching the ductwork to multizone units,*

ensure that the duct connection does not interfere with damper blade travel. If necessary, attach the ductwork to the outside of the fan discharge in order to leave the damper clear of obstructions. A clearance of one inch (minimum) is required between ductwork and low leak dampers for proper damper operation.

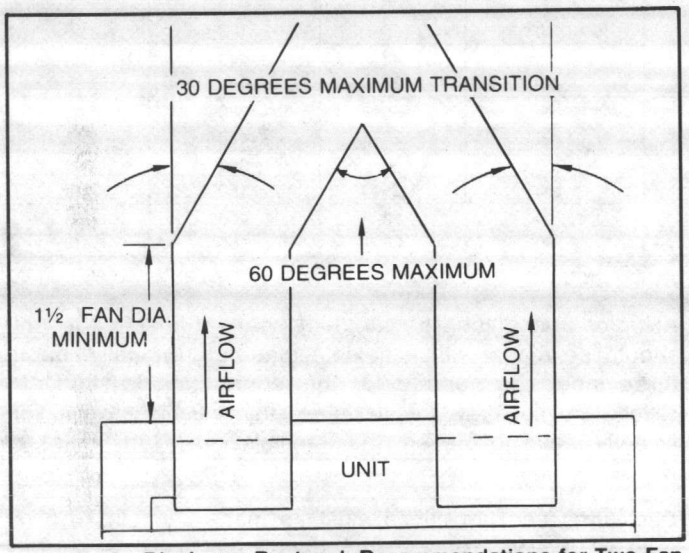

FIGURE 29 - Discharge Ductwork Recommendations for Two-Fan Units

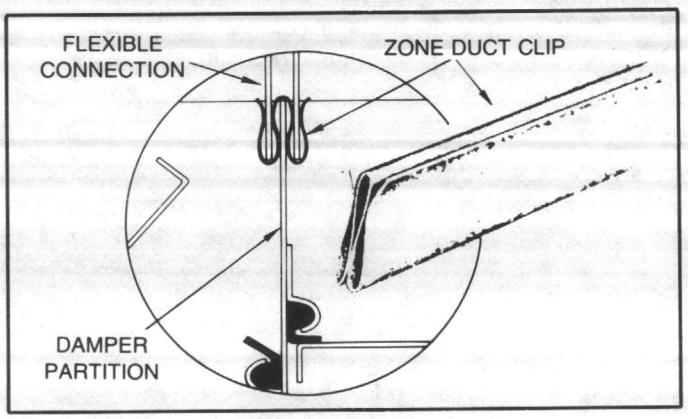

FIGURE 30 - Zone Duct Clip Installation

PIPING

CONDENSATE DRAIN CONNECTIONS

CAUTION: Failure to provide adequate condensate piping may result in water damage to the equipment or building.

Threaded condensate drain connections are provided on both sides of the coil section drain pan. Pitch the line downward toward an open drain and install a plugged tee to facilitate cleaning. Make sure the drain pan connection openings are unobstructed. Trap the drain line as shown in Figure 31 for draw-thru units and Figure 32 for blow-thru units. Draw-thru units size 73 and 86 have additional drain connections on both sides of the fan section. Run these drain connections into the coil section drain line or to a separate open drain.

Drain connection size on unit sizes 3 through 31 is 1-1/4-inch NPT (external). Drain connections on units size 35 to 86 is 1-1/2-inch NPT (internal). Install pipe caps or plugs on all unused unit drain connections.

Note: For units with optional wide coil, the contractor will need to extend the drain pan nipples under the extended drain pan before connecting the drain trap. Nipple length extension is determined by unit size. For size 3-31 units, add an additional 7½-inches in length. Size 41-50 units, add an additional 12-inches in length. Size 35, 63, 73 and 86 units, add an additional 8½-inches in length.

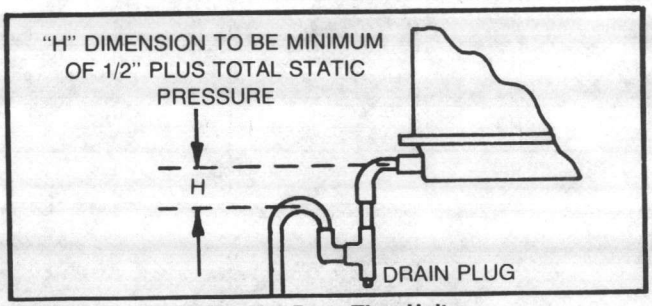

FIGURE 31 - Drain Trap for Draw-Thru Units

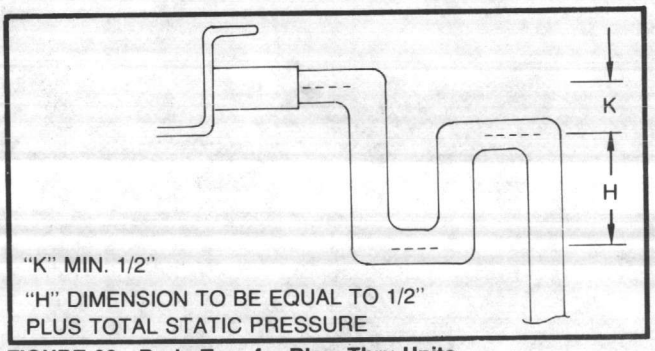

FIGURE 32 - Drain Trap for Blow-Thru Units

SPRAY SECTION PIPING — SPRAYED COIL CLIMATE CHANGER

Sprayed coil units require the following piping to the spray section:

1. Make-up water to the float line. See Figure 33A.
2. Water line from overflow connection to a trapped drain.
3. Shutoff valve and piping to an open or trapped drain.
4. Water line to the quick-fill connection.
5. Insulation of external piping around the spray pump to prevent condensate runoff.
6. Fill the spray tank.
7. Adjust the float valve to maintain a level 1/2-inch below the overflow outlet.

NOTE: *Air must be purged from the system and spray pump vavle must be adjusted for proper water flow. Instructions are given in the Start-Up section of the CLCH maintenance manual.*

CAUTION: Water treatment is required for Sprayed Coil Climate Changers if the supply water is scale forming or corrosive. If neccessary, engage the services of a qualified water treatment specialist. The object of water treatment is to prevent the fouling of the coil surfaces or undue metal damage. THE TRANE COMPANY CAN ASSUME NO RESPONSIBILITY FOR EQUIPMENT FAILURES WHICH ARE THE RESULT OF UNTREATED OR IMPROPERLY TREATED WATER.

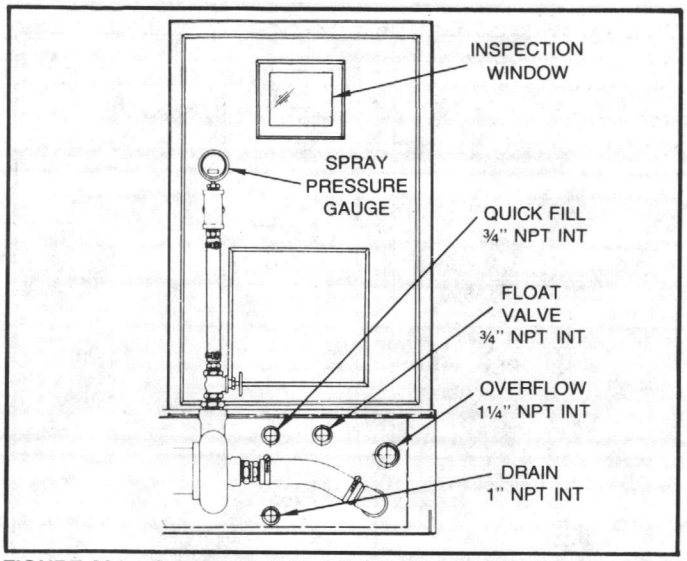

FIGURE 33A - Sprayed Coil Unit Tank Connections

GENERAL COIL PIPING RECOMMENDATIONS

1. Proper installation, piping and trapping is necessary to insure satisfactory coil operation and to prevent operational damage.
2. When selecting coil location, allow sufficient space for access to the coil for routine maintenance and service.
3. Support all piping independently of the coils.
4. Provide swing joints or flexible fittings in all connections that are adjacent to heating coils in order to absorb thermal expansion and contraction strains.
5. The Trane Company recommends that a short pipe nipple be used on coil headers prior to making up any welded flange or welded elbow type connections. This allows the use of a back-up pipe wrench when it is necessary to further rotate the welded flange or elbow when lining up bolt holes on the prefabricated piping.
   NOTE: *Use a "Back-Up Wrench" when attaching piping to coils with copper headers. Do not use brass fittings or brass pipe connectors. Brass distorts easily and causes connection leaks.*

   Delta-Flo coils have copper headers which extend outside the unit casing so that back-up pipe wrenches can be used.
6. When attaching the piping to the coil header, make the connection only tight enough to prevent leaks. Maximum recommended torque is 200 foot-pounds. Use pipe sealer on all threaded connections. **The use of Teflon tape or paste is not recommended by Trane.**
7. After completing the piping connections, seal the gap between the pipe and casing with tape or mastic before insulating the pipes.
8. To connect supply and return coil piping, outer coil panels must be removed. If not ordered, drain and vent access holes must be drilled. See Item 9.
9. Provisions must be made to drain those coils that are not in use when subjected to freezing temperatures.

   CAUTION: Failure to properly drain and vent coils when not in use during freezing temperatures may result in coil freeze-up damage.

   Coil types N, NS and A may be adequately drained in their pitched position in the unit. In coilless units, the coil, after field installation, is not pitched (unless special pitching coil support channel is ordered for steam coils) and may be adequately drained in their position in the unit. (Type N is drainable through the return connection.) The installer must provide appropriate piping for adequate drainage.

   Type WL coils are not drainable in either pitched or level position. To drain these coils remove the vent and drain plugs and blow the coils out as completely as possible with compressed air. The coils should then be filled and drained several times with full strength ethylene gylcol so that it will mix thoroughly with the water retained in the coil. Drain the coil out as completely as possible.

   Coil types D, DD, and K, plus W, P2, P4, P8, DL and LL are drainable in their factory-installed level position. Coil types D, DD, DL and LL also have Trane factory-installed drain and vent connections. Figures 34 through 39 illustrate coil drain and vent connections.

   Drainable coils installed in units containing coil types DL or LL will also have factory-installed drain and vent connections.

   NOTE: *On units with stacked coils, there is a condensate follower located at each end of the coil connection. Figure 33B illustrates the condensate follower provided at the end of the stacked coils.*

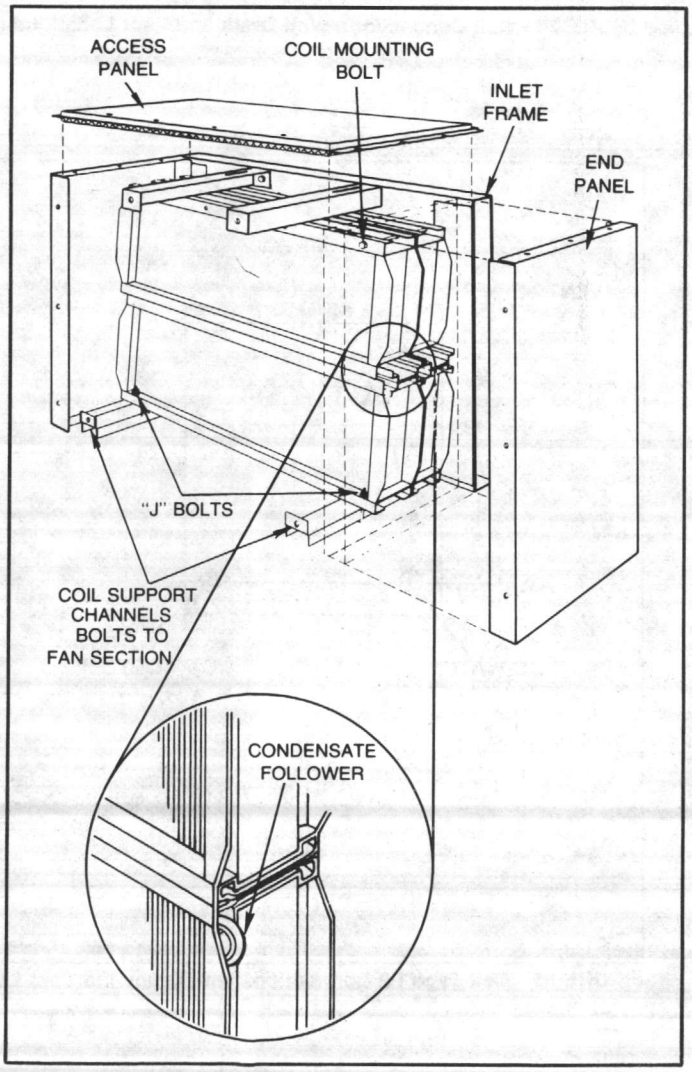

FIGURE 33B - Draw-Thru Unit Coil Section Details with View of Condensate Follower

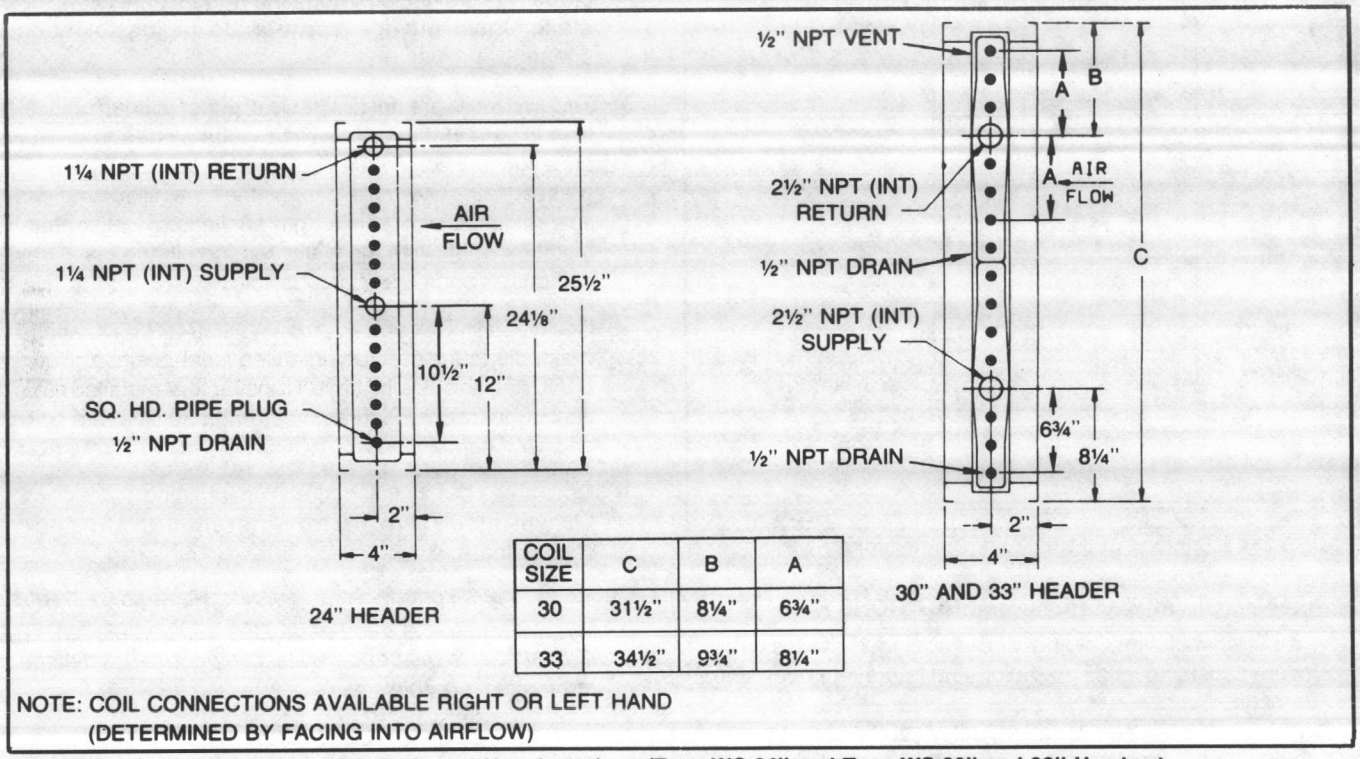

COIL SIZE	C	B	A
30	31½"	8¼"	6¾"
33	34½"	9¾"	8¼"

NOTE: COIL CONNECTIONS AVAILABLE RIGHT OR LEFT HAND
(DETERMINED BY FACING INTO AIRFLOW)

FIGURE 34 - Coil Connections With Drain and Vent Locations (Type WC 24" and Type WS 30" and 33" Headers)

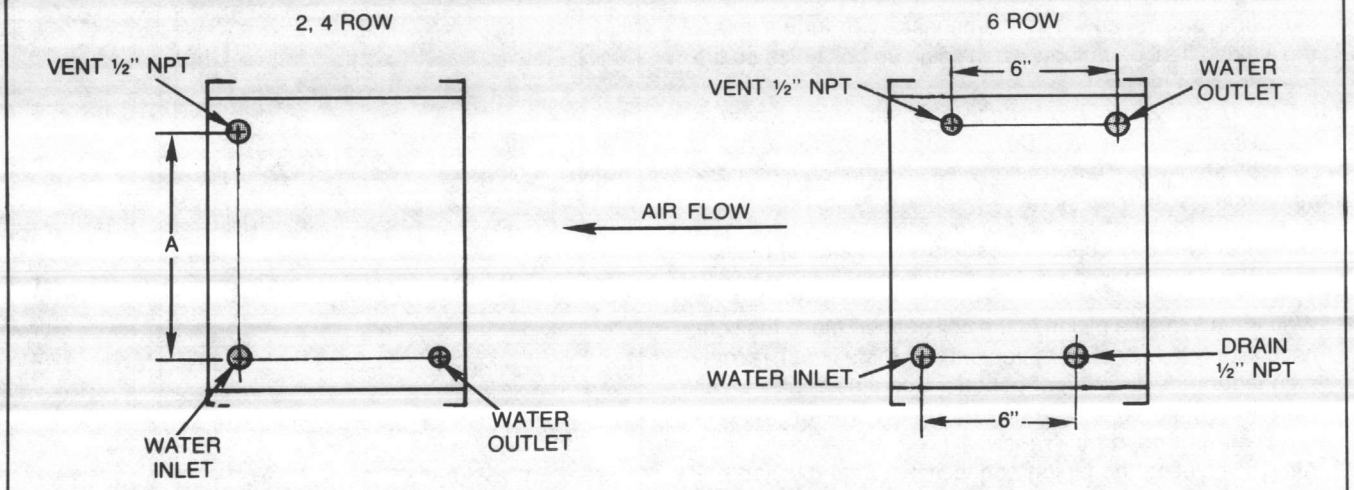

HEADER	A
18"	16½"
24"	22½"
30"	28½"

FIGURE 35 - Coil Type P2 Connections with Drain and Vent Locations (18", 24" and 30" Headers)

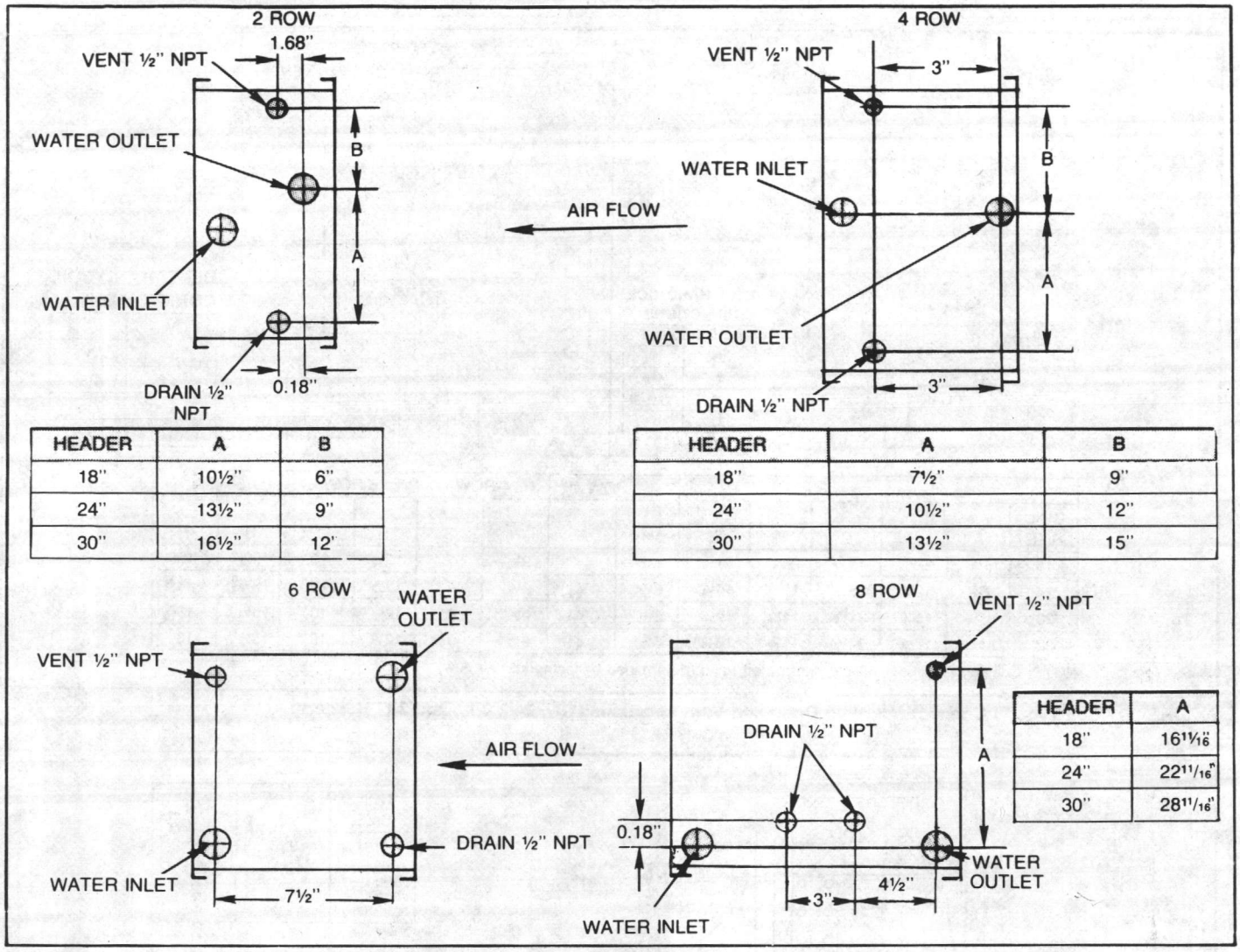

HEADER	A	B
18"	10½"	6"
24"	13½"	9"
30"	16½"	12"

HEADER	A	B
18"	7½"	9"
24"	10½"	12"
30"	13½"	15"

HEADER	A
18"	16 1/16"
24"	22 1/16"
30"	28 1/16"

FIGURE 36 - Coil Type P4 Connections with Drain and Vent Locations (18", 24", and 30" Headers)

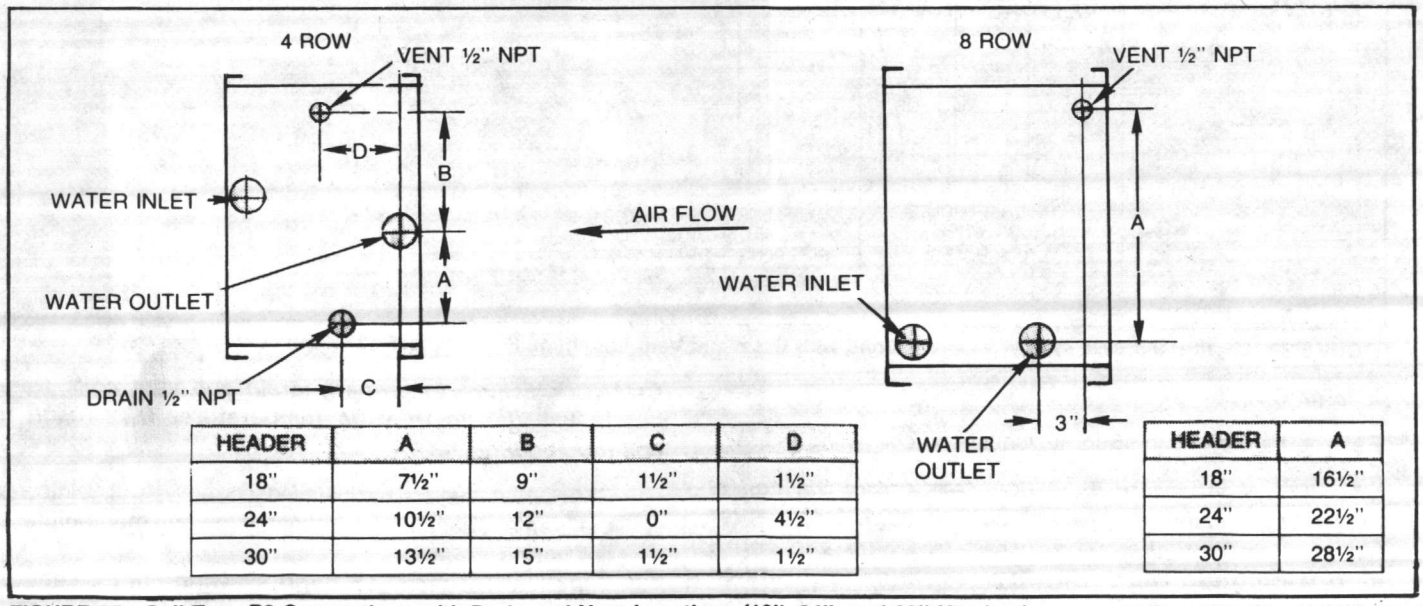

HEADER	A	B	C	D
18"	7½"	9"	1½"	1½"
24"	10½"	12"	0"	4½"
30"	13½"	15"	1½"	1½"

HEADER	A
18"	16½"
24"	22½"
30"	28½"

FIGURE 37 - Coil Type P8 Connections with Drain and Vent Locations (18", 24", and 30" Headers)

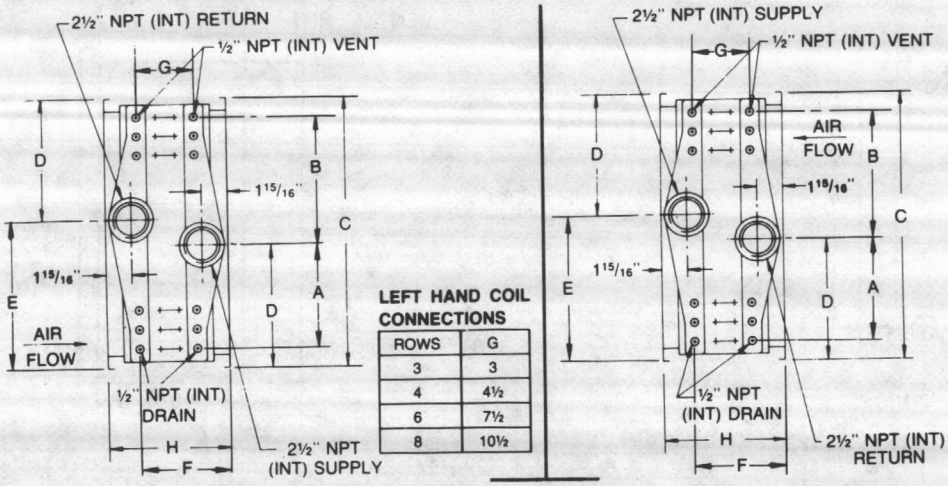

LEFT HAND COIL CONNECTIONS

ROWS	G
3	3
4	4½
6	7½
8	10½

RIGHT HAND COIL CONNECTIONS

ROWS	G
3	3
4	4½
6	7½
8	10½

						2-ROW		4-ROW		6-ROW		8-ROW	
COIL SIZE	A	B	C	D	E	H	F	H	F	H	F	H	F
18	6¾"	9¾"	19½"	8¼"	11¼"	6½"	4"	9½"	7"	12½"	10"	15½"	13"
24	9¾"	12¾"	25½"	11¼"	14¼"	6½"	4"	9½"	7"	12½"	10"	15½"	13"
30	12¾"	15¾"	31½"	14¼"	17¼"	6½"	4"	9½"	7"	12½"	10"	15½"	13"
33	14¼"	17¼"	34½"	15¾"	18¾"	6½"	4"	9½"	7"	12½"	10"	15½"	13"

NOTE: Coil connections available right or left hand (determined by facing into air flow).

FIGURE 38 - Coil Type W Connections With Drain and Vent Locations (18", 24", 30", and 33" Headers)

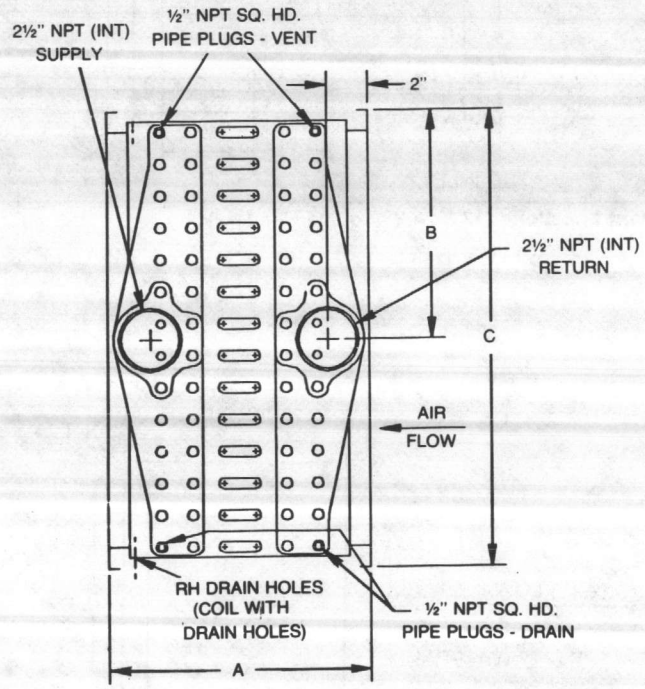

COIL SIZE	B	C
18	9¾"	19½"
24	12¾"	25½"
30	15¾"	31½"
33	17¼"	34½"

ROWS	A
6	12½"
8	15½"
10	18½"
12	21½"

FIGURE 39 - Right Hand Coil Type WD Connections with Drain and Vent Locations (6, 8, 10, and 12 Rows)

STEAM COIL PIPING

Refer to Figures 40 to 45 for typical steam coil piping.

CAUTION: Condensate must flow freely from the coil at all times in order to prevent coil damage from water hammer, unequal thermal stresses, freeze-up and corrosion. Complete the following recommendations to prevent coil damage.

CAUTION: Failure to properly drain and vent coils when not in use during freezing temperatures may result in coil freeze-up damage.

1. Check that the coil is installed correctly, with airflow in the same direction as indicated on the nameplate or coil casing.
2. Install a 1/2-inch, 15-degree swing-check vacuum breaker in the unused condensate return tapping as close as possible to the coil.

TABLE 12 — Cooling and Heating Coil — Connection Sizes (Inches NPT)

COIL TYPE	HEADER HEIGHT	SUPPLY	RETURN	VENT	DRAIN
W	18, 24, 30, 33	2.5	2.5	0.5	0.5
D	18, 24, 30, 33	2.5	2.5	0.5	0.5
DD	18, 24, 30, 33	2.5	2.5	0.5	0.5
WD	18, 24, 30, 33	2.5	2.5	0.5	0.5
K	18, 24, 30, 33	2.5	2.5	0.5	0.5
P2	18, 24, 30	0.75	0.75	0.5	0.5
P4	18, 24, 30	1.0	1.0	0.5	0.5
P8	18, 24, 30	1.25	1.25	0.5	0.5
WC	18	1.0	1.0	0.5	0.5
	24	1.25	1.25	0.5	0.5
	30, 33	2.5	1.5	0.5	0.5
WA	18, 24, 30, 33	2.5	2.5	0.5	0.5
N, NS	18	2.0	1.0	NA	NA
	24	2.5	1.25	NA	NA
	30, 33	3.0	1.25	NA	NA
A, AA	18	2.5	1.0	NA	NA
	24, 30, 33	2.5	1.25	NA	NA
TT	18, 24, 30, 33	0.75	0.75	NA	NA
DL	18, 24, 30, 33	1.5	2.0	0.375	0.375
WL	18, 24, 30, 33	1.5	2.0	0.375	0.375
LL	18, 24, 30, 33	2.5	2.5	0.375	0.375

Notes:

1. Connections are NPT internal.
2. Coil Type NS drains through supply connections.

3. Vent the vacuum breaker line to the atmosphere or connect it to the return main at the discharge side of the steam trap.

   NOTE: *Vacuum breaker relief is mandatory when the coil is controlled by a modulating steam supply or a two-position (ON-OFF) automatic steam supply valve.*

4. Run the return pipe at the full size of the steam trap connection except for the short nipple screwed directly into the coil condensate connection. **Do not bush or reduce the coil return tapping size.**
5. With automatic controls, or where the possibility of low pressure supply steam exists, use float and thermostatic traps with atmospheric pressure gravity drain and continuous discharge operation. Locate the steam trap discharge at least 12 inches below the condensate return tapping. Use bucket traps **only** when supply steam is unmodulated and pressure is 25 psig or higher.
6. When coils are installed in a series, size the steam traps for each coil using the capacity of the first coil in airflow direction.
7. Always trap each coil separately to prevent holdup in one or more coils.
8. Always install strainers as close as possible to the inlet side of the trap.
9. Use a V-port modulating valve to obtain gradual modulating action.
10. Control each coil bank separately when installing coils for series airflow with automatic steam control valves.

    CAUTION: Always open the steam supply control valve slowly to prevent possible coil damage.

11. Do not modulate systems with overhead or pressurized returns unless the condensate is drained by gravity to a receiver (vented to the atmosphere) and returned to the main by a condensate pump.
12. At start-up on units with fresh air dampers, slowly turn the steam on full for at least 10 minutes before opening the fresh air intake.
13. Pitch all supply and return steam piping down a minimum of 1 inch per 10 feet in the direction of flow.
14. Do not drain the steam mains or take-offs through the coils. Drain the mains ahead of the coils through a steam trap to the return line.
15. Overhead returns require 1 psig of pressure at the steam trap discharge for each 2-foot elevation to assure continuous condensate removal.

TABLE 13 - Refrigerant Coil (Type F) Piping Sizes (Inches)

HEADER HEIGHT	NO. OF CIRCUITS	CONNECTION SIZE (INCHES) LIQUID	SUCTION
18	2	7/8	1 3/8
	3	7/8	1 5/8
	6	1 1/8	2 1/8
	12	1 3/8	2 1/8
24	2	7/8	1 5/8
	4	7/8	1 5/8
	8	1 1/8	2 1/8
	16	(2)1 1/8	(2)2 1/8
30	2	7/8	1 3/8
	4	7/8	1 5/8
	5	7/8	2 1/8
	10	1 3/8	2 1/8
	20	(2)1 3/8	(2)2 1/8
33	3	7/8	1 5/8
	7	1 1/8	2 1/8
	11	1 3/8	2 1/8
	22	(2)1 3/8	(2)2 1/8

NOTE: Connections are piping OD.

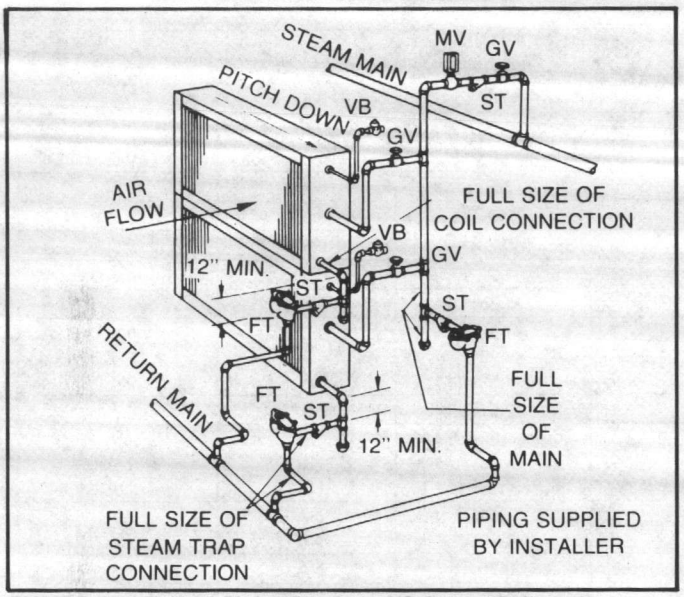

FIGURE 40 - Typical Piping for Type NS Steam Coils and Horizontal Tubes for Horizontal Airflow

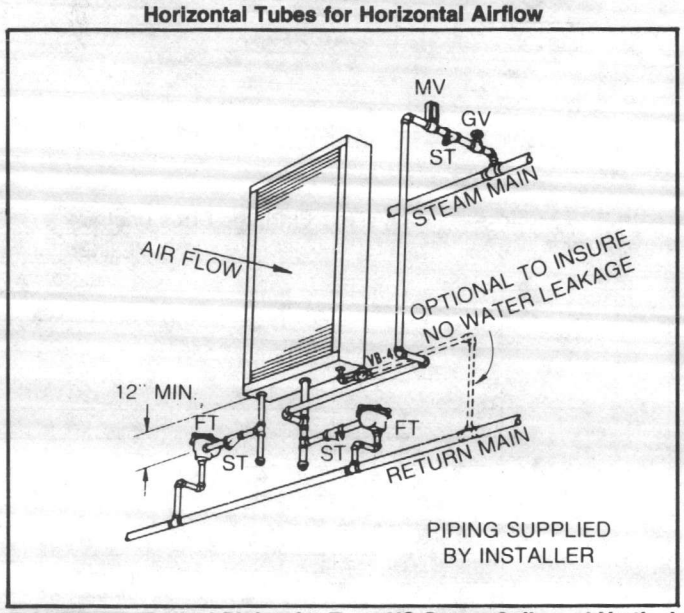

FIGURE 41 - Typical Piping for Type NS Steam Coils and Vertical Tubes for Vertical Airflow

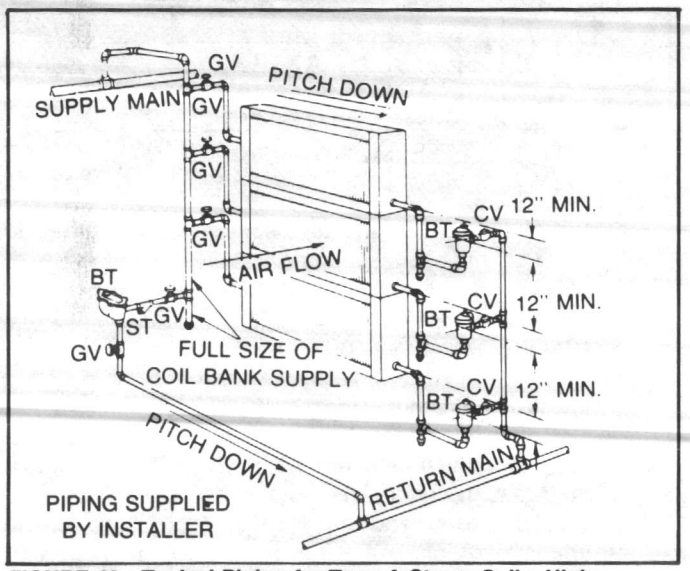

FIGURE 42 - Typical Piping for Type A Steam Coils, High Pressure, Horizontal Tubes for Horizontal Airflow

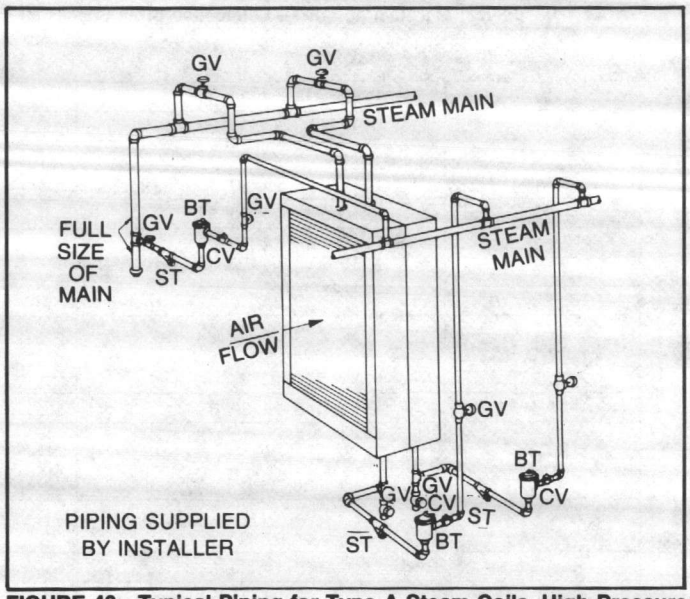

FIGURE 43 - Typical Piping for Type A Steam Coils, High Pressure, Vertical Tubes for Horizontal Airflow

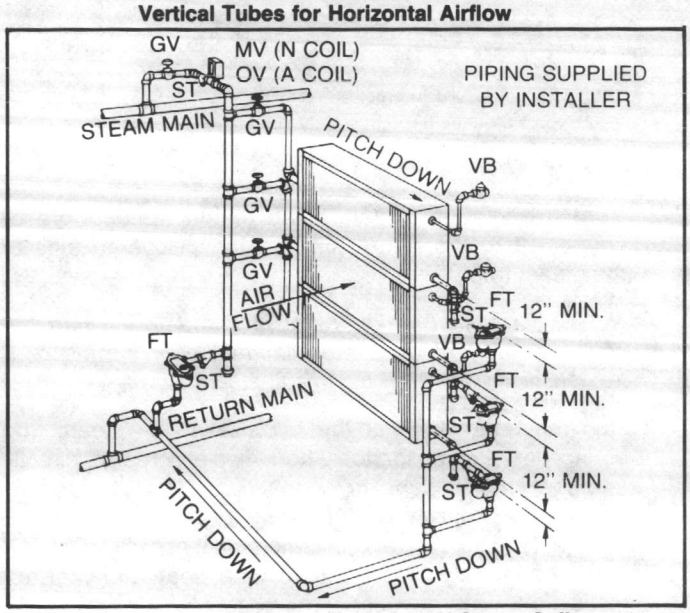

FIGURE 44 - Typical Piping for Type A or N Steam Coils, Horizontal Tubes for Horizontal Airflow

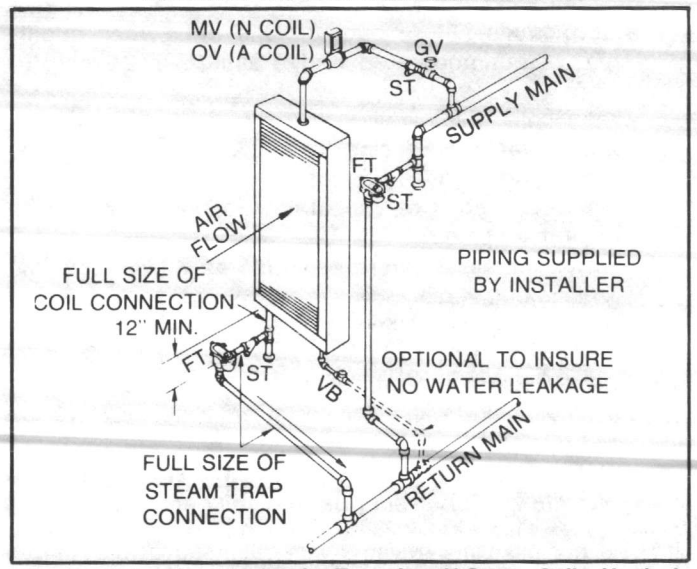

FIGURE 45 - Typical Piping for Type A or N Steam Coils, Vertical Tubes for Horizontal Airflow

HOT WATER COIL PIPING

Refer to Figures 46 to 48 for typical hot water coil piping.

1. Check that the coil is installed correctly, with airflow in the same direction as indicated on the nameplate or coil casing.
2. Type W, WL, DL, and WC hot water coils are self-venting only if the water velocity exceeds 1.5 feet per second. If it is below this rate, vent the coils by either of the following methods:

   a. Install an air vent in the top pipe plug tapping of the return header.
   b. Vent from the top of the return header horizontally to the return piping if the return line rises and is above the top of the coil.

CAUTION: Do not throttle or modulate the water flow for coils that are exposed to freezing air. Coil damage may result from freeze-up.

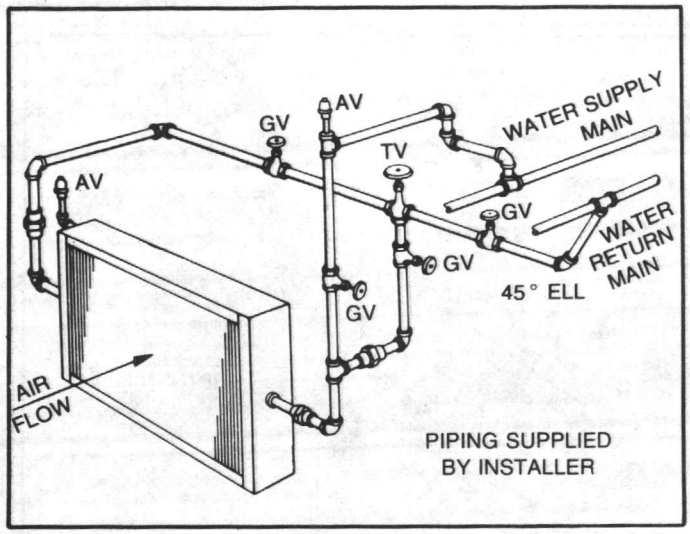

FIGURE 48 - Typical Piping for Type W or WA, 1-Row Water Coil

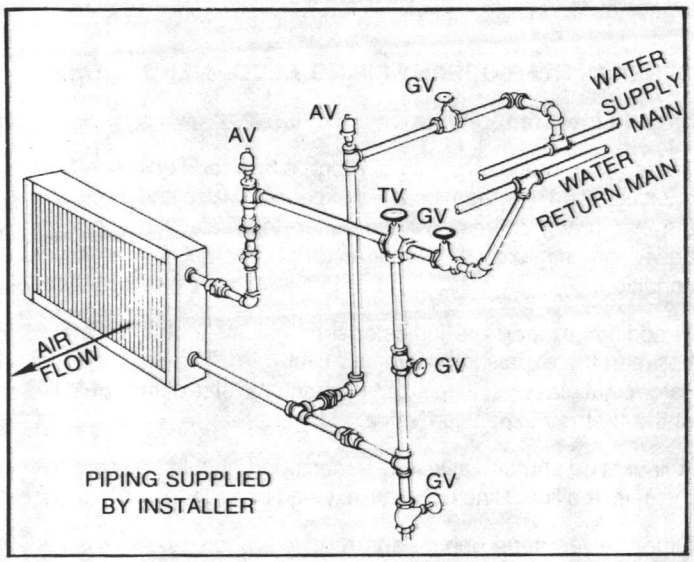

FIGURE 46 - Typical Piping for Type WC Water Coil

WATER COOLING COIL PIPING

Refer to Figures 49, 50 and 50A for typical water cooling coil piping.

1. Check that the coil is installed correctly, with airflow in the same direction as indicated on the nameplate or coil casing.
2. Vent both supply and return lines.
3. Install a strainer ahead of the control valve, if used.
4. Install a drain line and shutoff valve in the supply line near the coil.
5. Check for coil fin damage and straighten if necessary.
6. Type W, D, K, DL, WL and LL water coils are self-venting only if the water velocity exceeds 1.5 fps. Type DD and WD coils are self-venting only if the water velocity exceeds 2.5 fps. If water velocity is below these minimum values, vent by one of the following methods.

   a. Install an air vent in the top pipe plug tapping of the return header, or;
   b. When the return line rises above the top of the coil, vent from the top of the return header horizontally to the return piping.

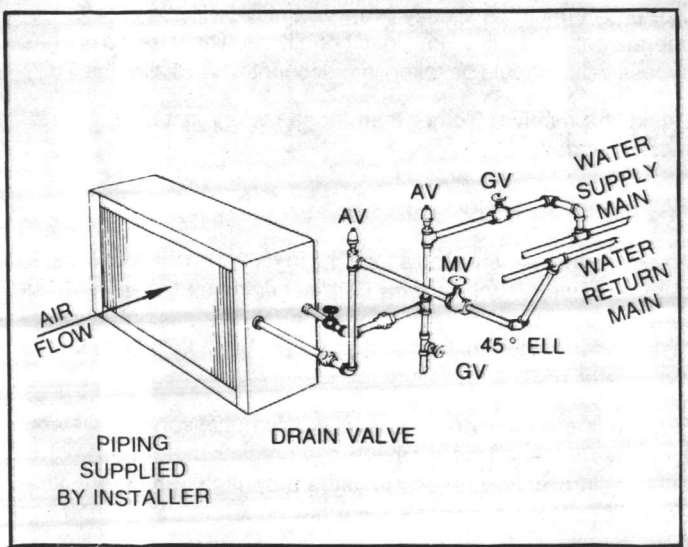

FIGURE 47 - Typical Piping for Type W, Two-Row Water Coil

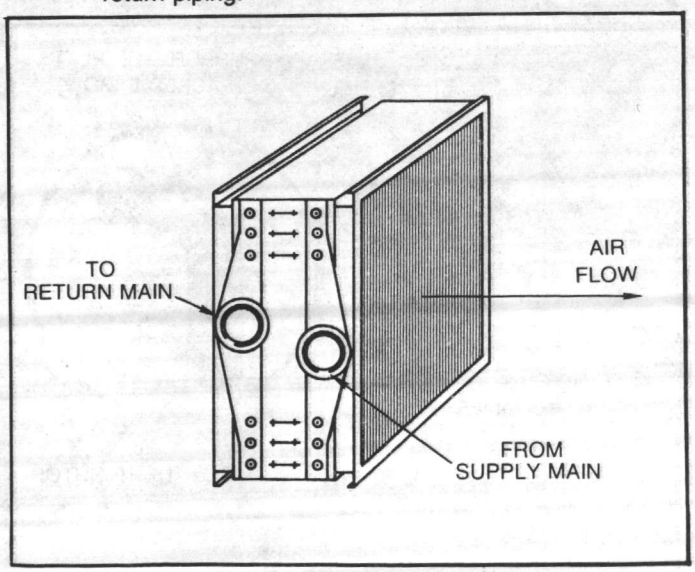

Figure 49 - Typical Piping for Type D, W or K Water Cooling Coils with End Connections.

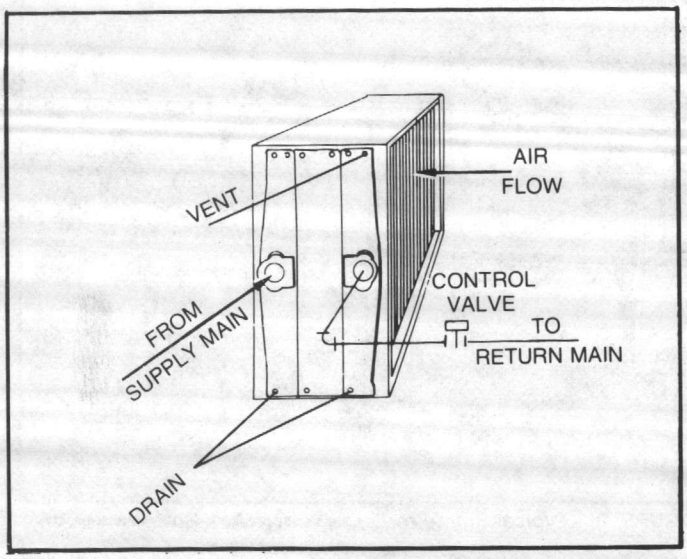

Figure 50 - Typical Piping for Type DD Water Cooling Coil with Center Connections.

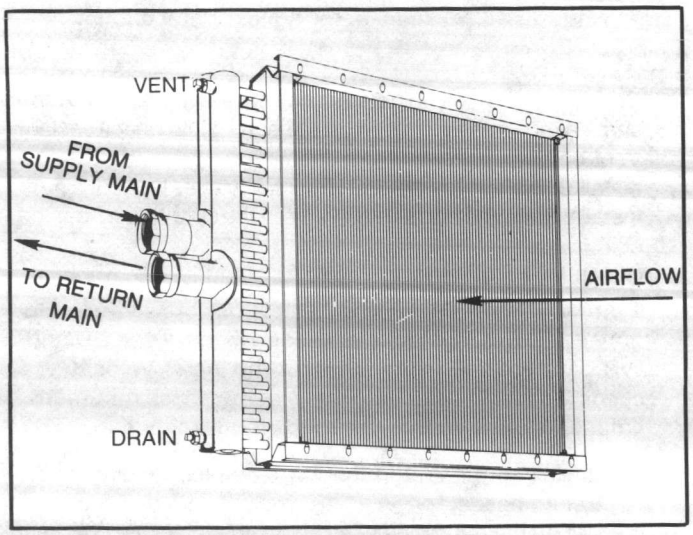

Figure 50A - Typical Piping for 2-Row, Type WL and DL Water Coil with Drain and Vent Locations.

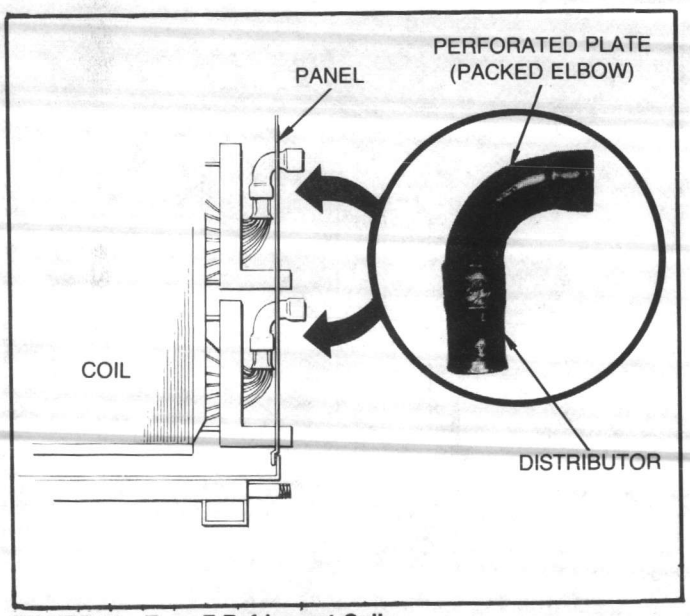

FIGURE 51 - Type F Refrigerant Coil

REFRIGERANT COIL PIPING

NOTE: *This coil has been dehydrated and charged with a holding charge. To prevent leaks and system contamination, do not break the seals until the coil is installed.*

Check that the coil is installed correctly, with airflow in the same direction as indicated on the coil nameplate or casing. The suction connection must be at the bottom of the suction header.

Follow accepted refrigeration piping practices and safety precautions. See Figure 51 for typical refrigerant coil piping. General refrigerant piping recommendations for component selection and line sizing follow. Specific recommendations should be provided with the high-side components, including instructions for pressure testing, evacuation, and system charging.

Leak-test the entire refrigeration system after piping is complete. Charge the unit according to approximate weight requirements and operating pressures. Measure superheat and adjust the thermal expansion valve setting if necessary.

GENERAL REFRIGERANT PIPING RECOMMENDATIONS

Liquid Line Components

Trane recommends the use of a properly sized liquid line filter-drier, installed upstream from the expansion valve and as close to the evaporator coil as possible. Filter-drier selection should be based on a maximum pressure drop of 2 psi at the design condition.

In addition, a moisture indicator/sight glass should be installed between the expansion valve and filter-drier. The moisture indicator/sight glass must be sized to match the size of the liquid line at the thermal expansion valve.

A liquid line shutoff valve with access port should be sized with the selected liquid line OD, and installed close to the condenser.

Other valves, tube bends, and reducers should be minimized, since these items tend to increase pressure drop and reduce subcooling at the expansion valve.

The Thermal Expansion Valve (TEV) must be selected for proper size and capacity. A slightly oversized valve will allow the unit to operate satisfactorily at low-load conditions. The use of a hot gas bypass valve should be taken into account when sizing the TEV.

Liquid line receivers, other than those factory-installed, are **not** recommended.

Suction Line Components

A suction line pressure tap should be installed on the leaving side of the evaporator coil near the TEV sensing bulb location. Accurate superheat measurement and thermal expansion valve adjustment demands that suction pressure be measured near the evaporator coil.

Suction line filter-driers are usually only necessary on systems that have experienced a severe compressor motor burn-out or other failure which results in extremely high refrigerant temperatures. This filter-drier should not be left in the suction line permanently.

Liquid Line Sizing

All compressors have a Refrigerant Charge Limit (RCL) that must not be exceeded. Since the RCL and pressure drop are in direct conflict with each other, Trane recommends that the liquid line be sized as small as possible, while maintaining a low enough pressure drop to ensure 5 degrees F of subcooling at the expansion valve.

Suction Line Sizing

Suction line tubes must be sized to maintain refrigerant vapor velocities that are high enough to ensure oil entrainment under all operating conditions.

Although not harmful, it is not necessary to pitch horizontal suction lines toward the compressor when the refrigerant coil is used with Trane condensing units, which are designed with a gas trap in the suction line just prior to the compressor. This gas trap helps the crankcase heater to stop temperature-induced migration during the off cycle. However, it also eliminates gravity flow to the compressor sump.

WIRING

WARNING: DISCONNECT ELECTRICAL POWER SOURCE BEFORE SERVICING THE UNIT OR CONNECTING ELECTRICAL WIRES. FAILURE TO DO SO MAY RESULT IN PERSONAL INJURY OR DEATH FROM ELECTRICAL SHOCK OR ENTANGLEMENT IN MOVING PARTS.

Wiring to the unit fan motor and the spray pump motor (sprayed coil units only) must be provided by the installer and must comply with all national and local electrical codes. The installer must also furnish a fused disconnect switch in compliance with national and local electrical codes.

CAUTION: Use copper conductors only for terminal connections. Use of aluminum or other type of wiring may result in galvanized corrosion or overheating and resultant equipment damage.

Fan motors require motor overload protective devices that are rated or selected in compliance with the National Electric Code. Specific unit and motor connection diagrams are provided on the unit. If wiring directly to the motor, provide a flexible connection at the motor to permit fan belt adjustment. Fractional-horse-power motors may be factory-connected to a terminal box on the unit. If this construction is provided, complete field wiring to this connection box.

INSTALLATION CHECKLIST

Complete this checklist as the unit is being installed to verify that all recommended installation procedures are accomplished before the unit is started. This checklist does not replace the detailed instructions given in appropriate places in the Installation section of this manual. Read the entire section carefully to become familiar with the installation before installing the unit.

WARNING: DISCONNECT ELECTRICAL POWER BEFORE SERVICING OR INSPECTING THE UNIT. FAILURE TO DO SO MAY RESULT IN PERSONAL INJURY OR DEATH FROM ELECTRICAL SHOCK OR ENTANGLEMENT IN MOVING PARTS.

RECEIVING AND HANDLING

- ☐ 1. Unit and accessories are inspected for shipping damage or material shortage. Report any claims immediately.
- ☐ 2. Unit nameplate data agrees with submittal and ordering information.

LIFTING

- ☐ 1. Center of gravity is approximated.
- ☐ 2. Proper rigging devices are installed, including slings and spreader bars.
- ☐ 3. Unit is hoisted to its approximate location.

UNIT LOCATION

- ☐ 1. Floor or foundation is prepared to support unit weight and to be level.
- ☐ 2. Sufficient access is provided for unit size, clearances and maintenance access.
- ☐ 3. Foundation or mounting platform is sized for unit, accessories and mounting legs.
- ☐ 4. For ceiling-mounted units, suspension frame is selected and prepared.

MOUNTING

☐ 1. Vibration isolators are installed and fastened to the floor.

☐ 2. Shipping angles are removed.

☐ 3. Multi-section units are assembled.

NOTE: *Some units require further assembly after part of the unit is mounted.*

☐ 4. Support frame are constructed and attached for ceiling-mounted units.

☐ 5. Assembled units are mounted on isolators or ceiling supports.

☐ 6. Unit assembly is complete.

☐ 7. Mutli-section units are joined with flexible connection material.

☐ 8. Tension restraints are installed on high-pressure units.

☐ 9. Splash guards are installed where necessary.

☐ 10. Unit is fastened to isolators.

☐ 11. Unit is level.

ACCESSORIES

☐ 1. Bag filter section is installed.

☐ 2. Filters are installed.

☐ 3. Manometers, if necessary, are installed.

☐ 4. Exhaust Air Economizer is installed.

☐ 5. All accessories are installed.

FAN MOTOR ASSEMBLY

☐ 1. Shafts are properly installed in bearings.

☐ 2. Sheaves are properly located on shafts.

☐ 3. Shafts are level and parallel.

☐ 4. Sheaves are aligned.

☐ 5. Belt tension is correct.

☐ 6. Belt is at least 1/2-inch from unit flanges or structural supports.

☐ 7. **All sheave and bearing set screws are tightened to the correct torques.**

☐ 8. Belt guard is installed.

DAMPERS

☐ 1. Blow-Thru Mutlizone units — Drive rod assembly is adjusted.

☐ 2. Cold deck damper rods are insulated (if necessary).

☐ 3. Dampers are set for each zone.

☐ 4. Damper operators (furnished by the installer) are installed and adjusted.

INLET VANES

☐ 1. Vanes and rod assemblies move freely. Lubricate if necessary.

☐ 2. Operators and linkage (furnished by the installer) are installed and adjusted.

DUCTWORK

- ☐ 1. Intake and discharge connections are made with flexible connection.
- ☐ 2. Discharge ductwork is unchanged in size or direction for at least 1-1/2 fan diameters in length.
- ☐ 3. Adequate clearance is allowed between duct connections and dampers.

PIPING

- ☐ 1. Condensate drain lines are trapped, installed and connected to the coil drain pan.
- ☐ 2. Unused drain connections are plugged.
- ☐ 3. Spray section piping is complete for sprayed-coil units.
- ☐ 4. Provisions are made for properly draining and venting all coils.
- ☐ 5. Supply and return coil connections are made.
- ☐ 6. Supply and return piping is complete.

WIRING

- ☐ 1. Supply power is connected to fan motor.
- ☐ 2. Wiring direct to fan motor is flexible connection.
- ☐ 3. If terminal box is provided, field-wiring to terminal box is complete.
- ☐ 4. Supply power is connected to spray pump motor (sprayed-coil units only).
- ☐ 5. Fused disconnect switch is installed within sight of unit.
- ☐ 6. Motor overload protective devices are installed.

START-UP

WARNING: DISCONNECT ELECTRICAL POWER AND ALLOW ALL ROTATING PARTS TO STOP COMPLETELY BEFORE SERVICING OR INSPECTING THE UNIT. FAILURE TO DO SO MAY RESULT IN PERSONAL INJURY OR DEATH FROM ELECTRICAL SHOCK, ENTANGLEMENT IN MOVING PARTS OR PRESSURE DIFFERENTIAL WITHIN THE UNIT.

PREPARATION

Perform the following checks and inspections before operating the unit:

1. **With the system de-energized,** check that the electrical connections are complete and tight at the terminals.
2. Make sure the belt guard is in place.
3. Inspect the fan wheels. They should turn freely in the proper direction of rotation.
4. As mentioned previously in the Installation section, check the bearing and sheave setscrews for proper torque settings. Refer to applicable section in this manual.
5. Inspect fan belt tension and sheave setscrews. Belt tension, sheave alignment and setscrew torques for the motor assembly are given in this manual.
6. Check the piping and valves for leaks. Open or close the valves, depending on their function in the system. Drain lines should be open. If a refrigerant coil is used, the system must be evacuated, leak-tested with dry nitrogen, and charged with refrigerant.
7. Check that the air filters are in place and that all dampers are set properly.
8. Remove all foreign material from the drain pan. Check the drain pan and condensate line to make sure they are not obstructed.
9. All unit access panels must be in place. All screws, nuts and bolts must be tightened to their proper torques.
10. On high-pressure units, the coil piping hole gaskets must be installed properly.
11. If the unit includes fan paralleling control, open it fully.
12. Inspect fan motor and bearing lubrication.

CAUTION: To prevent fan motor or bearing failures, it is necessary that they are lubricated properly. This must be checked before the unit is started for the first time. See the label on the side of the unit, the tag attached to the motor and the Climate Changer Maintenance Manual.

START-UP PROCEDURES

After completing all the items uner "Pre-Start-Up," the unit may be started and the following checks and adjustments performed:

NOTE: *High Pressure units with self-locking collar fan bearings. During start-up check rotation of fan shaft to determine if fan motor is wired correctly. Incorrect rotation of fan may cause premature bearing and shaft failure.*

1. Measure the motor voltage and amps on all phases to insure proper operation. Compare these readings with the motor nameplate.

2. If the unit includes a spray pump, open the spray pump air valve and purge air from the system. Adjust the spray pump valve until the spray pattern diameter equals the finned height of the top cooling coil. The resulting gauge pressure should be between 7 and 10 psig.

3. If the unit includes fan paralleling control (two-fan, blow-thru units only), adjustment may be required. An indication of an incorrect setting is paralleling of the fan (pulsating operation) and erratic fan motor amperage readings. Adjust the fan paralleling control until fan operation is smooth and the amperage reading is steady.

   The fan paralleling control should be closed only far enough to eliminate erratic operation. Rarely should adjustment exceed two inches on either fan. If the devices are closed too far, unit capacity will be reduced.

   Each fan paralleling control device has two rods per fan extending upward through the top of the blow-thru fan section. To adjust fan operation for a smooth airflow condition, the following should be done:

   a. Loosen the locking nut on one rod, lower the rod ½-inch and retighten. Repeat for the other rod on the fan.
   b. If the unstable condition still exists, repeat Step A.
   c. If the unstable condition still exists, relocate the fan paralleling control to the original position and perform Steps A and B on the other fan.
   d. If the unstable condition still exists, lower both fan paralleling devices to 1-inch from the original position. Repeat Steps A, B, and C, using 1-inch as a base reference.

4. Measure voltage at all three wires. Maximum allowable voltage imbalance is two percent. Voltage imbalance is defined as 100 times the sum of the deviation of the three voltages from the average, divided by twice the average voltage. For example, if the three measured voltages are 221, 230 and 227, the average voltage would be 226 volts. The percent of voltage imbalance is then calculated:

$$\frac{100 \times \{ [226-221] + [230-226] + [227-226] \}}{2 \times 226} =$$

2.2% (Unacceptable)

   In this example, 2.2 percent imbalance is not acceptable and the power company should be notified to correct it.

5. If the fan speed is changed more than 5% from the original designed rpm, or if parts such as shafts, fan wheels, bearings, or other drive components are replaced, the unit vibration should be checked.

   The unit vibration, measured horizontally and vertically directly on the fan shaft bearing (perpendicular to the shaft centerline), should not exceed 0.2 in/sec. or 3.0 mils, whichever is the lower displacement at the unit operating speed.

SHEAVE ALIGNMENT

To prevent interference of the fan frame with the belt, make sure that the belt edge closest to the motor has the proper clearance from the fan frame, as shown in Figure 52.

Align the fan and motor sheaves by using a straightedge as shown in Figure 53. The straightedge must be long enough to span the distance between the outside edges of the sheaves. When the sheaves are aligned, the straightedge will touch both sheaves at points A through D. A string, drawn tight, may be used in the same manner. For uneven width sheaves, place a string in the center groove of both sheaves and pull tight. Adjust sheaves and tighten the sheave setscrews to the proper torques, given in Table 4.

Parallel operation of the fan and motor shafts is necessary to prolong belt life. Place a level on the shafts to check horizontal alignment. Shim if necessary.

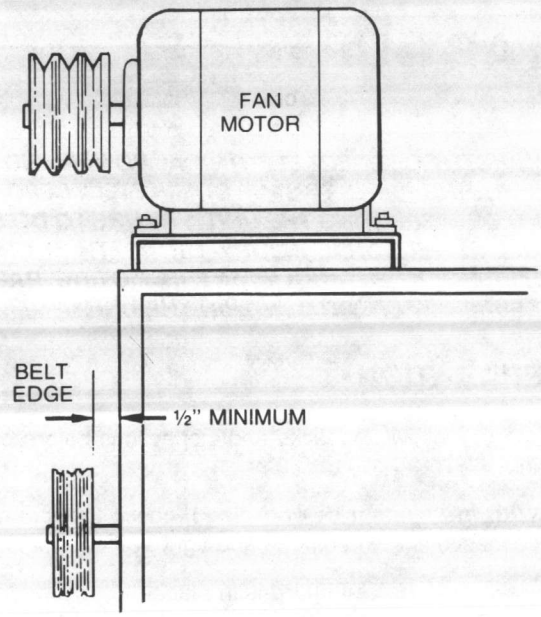

Figure 52 - Minimum Allowable Distance Between Frame Work and Fan Sheave.

FAN ASSEMBLY SETSCREWS

Check and adjust fan wheel, bearing and sheave setscrews whenever a component is removed or an adjustment is made. Refer to Table 4 for recommended Torques.

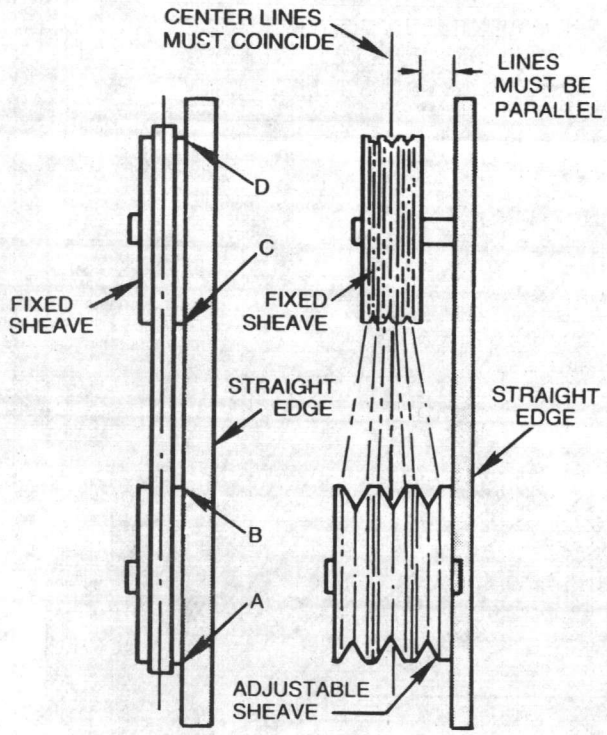

Figure 53 - Sheave Alignment

FAN WHEEL CLAMPS

The clamps that hold the fan hub on the shaft must be properly positioned and tightened to ensure safe fan operation.

NOTE: *On fans that are 20 inches or smaller, the clamps should be replaced whenever the wheel or shaft is replaced.*

On fans that are 20 inches or smaller, locate the two-piece clamp over the hub so that the hub tabs go through the clamp slots. Finger-tighten the two bolts evenly, then torque down both bolts **evenly** in small increments to 25 foot-pounds. The clamp flanges should meet at both bolt locations before 25 foot-pounds is reached.

On fans that are larger than 20 inches, finger-tighten the three bolts evenly, then torque down all three bolts **evenly,** in small increments, to 35 to 40 foot-pounds. Visually check the spacing between the three clamp flanges to make sure they are consistently tightened.

FAN BELT TENSION

NOTE: *Fan belt tension should be checked at least twice during the first days of operation, since there is a rapid decrease in tension until belts are run in.*

WARNING: DISCONNECT ELECTRICAL POWER SOURCE AND ALLOW ALL ROTATING EQUIPMENT TO STOP COMPLETELY BEFORE INSPECTING OR SERVICING THE UNIT. FAILURE TO DO SO MAY RESULT IN PERSONAL INJURY OR DEATH FROM ELECTRICAL SHOCK OR MOVING PARTS.

Proper belt tension is required to ensure maximum bearing and drive component life and is based on fan brake horsepower requirement. Use Chart 1 to find the proper tension and refer to the inset for an example. To use the chart, you must know:

1. Fan design bhp per belt (**not** motor hp)
2. Fan rpm
3. Fan sheave pitch diameter (Figure 54 - found by measuring where the middle of the belt rides in the sheave).
4. Type of belt cross-section (stamped on the belt)

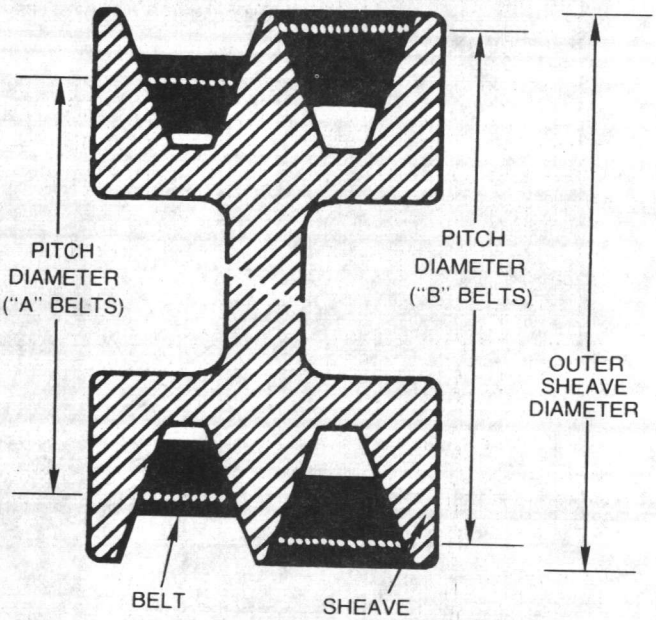

Figure 54 - Fan Sheave Pitch Diameter

As shown in the example of Chart 1, the correction tension (pounds force) is 9.6 pounds, at ½-inch deflection. Deflection is determined by dividing the belt span distance by 64, as shown in Figure 55.

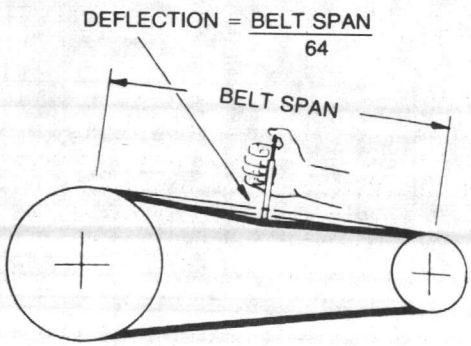

Figure 55 - Belt Tension Measurement

Table 14 — Values for K Factor (Belt Cross-Section Types)

BELT TYPE	A	B	C	D	E	3L	4L	5L	3V	5V	8V	AX	BX	CX	DX
"K" FACTOR	8	13	40	80	95	6	6	6	6	12	25	11	18	54	101

CHART 1 - Belt Tension

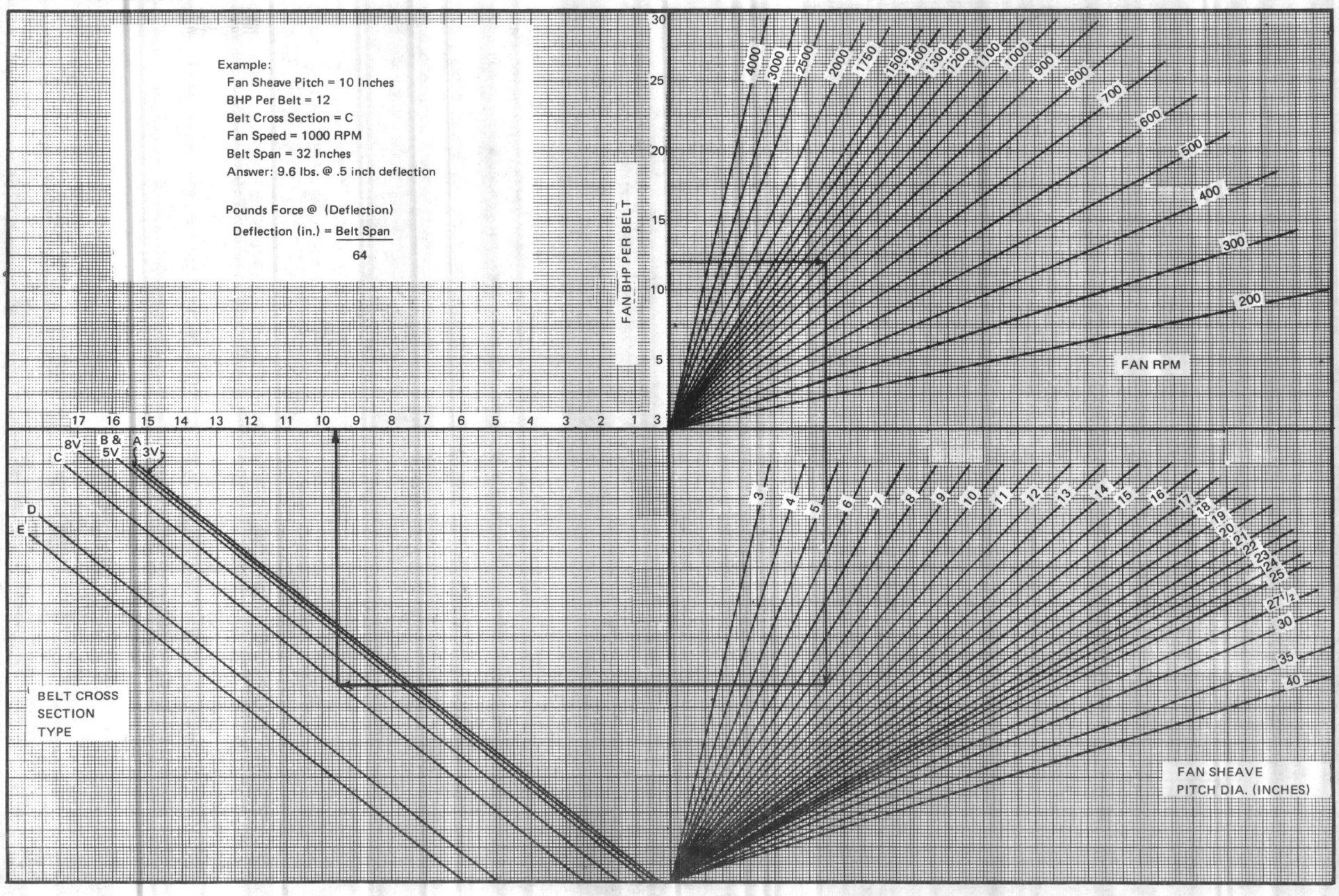

To measure belt tension, use a belt tensioner as shown in Figure 56. Determine actual deflection by depressing one belt with the belt tensioner and measuring the deflection relative to the other belts or to belt line. Adjust the belt tension to the correct pounds force and tighten all setscrews to the proper torques.

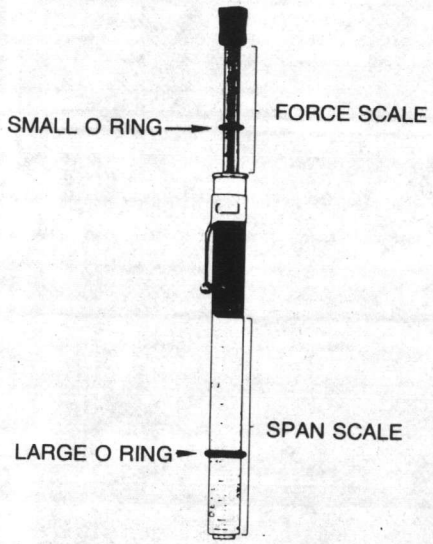

Figure 56 - Belt Tensioner

For belt cross-section types not given in Chart 1, refer to Table 14 and use the following equations to calculate correct belt tension:

$$F = \frac{T + K}{16}$$

where F = force measured in pounds at specific deflection

K = constant determined by belt cross-section type (See Table 14).

$$T = 24{,}750 \times \frac{\text{(fan hp per belt)}}{\text{(belt speed)}}$$

$$\text{Belt speed} = \frac{\text{(fan pitch diameter)}}{12} \times (\pi) \times \text{fan rpm (ft/min)}$$

For example, given the following:

Motor sheave pitch diameter: 16.8 inches, eight groove
Fan sheave pitch diameter: 19.8 inches, eight groove
Fan horsepower: 262.4 bhp
Fan rpm: 983 rpm
Belt type: 8V
Sheave span: 60.9 inches

$$\text{Belt speed} = \frac{19.8}{12} \times 3.14 \times 983 = 5092$$

$$T = 24{,}750 \times \frac{(262.4 \text{ bhp}/8 \text{ belts})}{5092} = \frac{24{,}750 \times 32.8}{5092} = 159.4 \text{ lbs}$$

$$F = \frac{159.4 + 25}{16} = 11.5 \text{ lbs}$$

$$\text{Also, } D = \frac{\text{Belt span (inches)}}{64} = \frac{60.9}{64} = .95 =$$

approximately 15/16 inches

Therefore, the belt tensioner should read 11.5 pounds force at 15/16-inch deflection. This will yield 159.4 pounds force belt tension.

Belt tensions determined by using Chart 1 and Table 14 are minimum values. The correct operating tension for a V-belt drive is the lowest tension at which the belts will not slip under start-up or peak load conditions. It may be necessary, however, to increase the tension of some drives to reduce excessive belt flopping.

CAUTION: Do not over-tension the belts. Excessive tension will reduce fan and motor bearing life, accelerate belt wear and possibly cause shaft failure.

Remove the belt guard and clean the sheaves and belts with a dry cloth. Oil and gease should be kept away from the belts because they can cause deterioration and slippage. The use of belt dressing is **not** recommended.

For further information on this product or other Trane products, refer to the "Trane Service Literature Catalog", ordering number IDX-IOM-1. This catalog contains listings and prices for all service literature sold by Trane. The catalog may be ordered by sending a $20.00 check to: The Trane Company, Service Literature Sales, 3600 Pammel Creek Road, La Crosse, WI 54601.

TRANE™

Installation Maintenance

Library	**Service Literature**
Product Section	**Air Term. Dev. and Heating Prod.**
Product	**Unit Heaters**
Model	**Hydronic**
Literature Type	**Inst.-Main.**
Sequence	**2A**
Date	**February 1985**
File No.	**SV-TD-UH-UH-IM-2A-285**
Supersedes	**UH-IM-2 179**
Ordering No.	**UH-IM-2A**

Since the Trane Company has a policy of continuous product improvement, it reserves the right to change specifications and design without notice. The installation and servicing of the equipment referred to in this booklet should be done by qualified, experienced technicians.

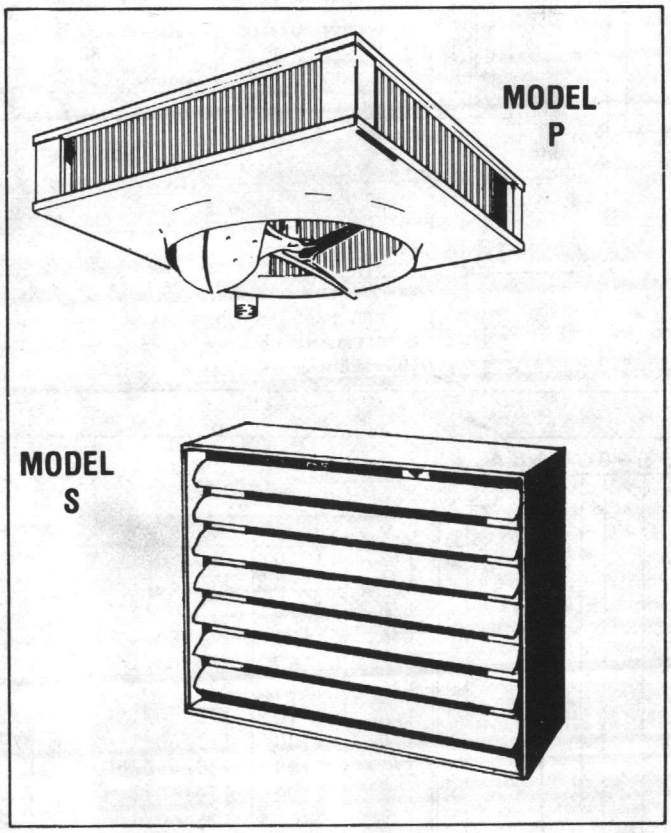

PROPELLER UNIT HEATERS

MODELS S AND P

TABLE OF CONTENTS

Installation 3
Dimensions 4
Weights 7
Mounting 7
Piping 7
Motors 10
Coils 11
Maintenance 12

© The Trane Company 1985
La Crosse, Wisconsin 54601
Printed In U.S.A.

MODEL NUMBER DESCRIPTION

MODEL "P" UNIT HEATERS

UHPA-042P-4A-BAB

UNIT HEATER
MODEL P

DEVELOPMENT SEQUENCE

UNIT SIZE

BTU	BTU
042 - 41,300	252 - 249,800
064 - 65,500	280 - 283,800
080 - 80,600	336 - 333,400
102 - 101,800	384 - 386,000
122 - 124,400	500 - 496,000
146 - 152,000	600 - 585,000
166 - 173,000	720 - 705,000
202 - 201,200	

COIL TYPE
P - STEAM OR HOT WATER **

FIN SERIES
4 - 144**
9 - SPECIAL

DESIGN SEQUENCE

MOTOR

	H.P.	TYPE*	RPM	VOLTAGE
B	1/25	ENCL	1550	115/60/1 **
C	1/20	ENCL	1550	115/60/1 **
D	1/8	ENCL	1070	115/60/1 **
F	1/6	ENCL	1100	115/60/1 **
G	1/6	EXPL	1140	115/60/1 **
H	1/6	ENCL	1140	230-460/60/3
J	1/4	ENCL	1100	115/60/1 (202 ONLY)**
K	1/4	ENCL	1100	115/60/1 (252 ONLY)**
L	1/4	EXPL	1100	115/60/1
M	1/4	ENCL	1100	230-460/60/3
P	1/2	ENCL	1100	115/60/1
R	1/2	EXPL	1100	115/60/1
S	1/2	ENCL	1100	230-460/60/3
T	3/4	ENCL	1100	230-460/60/3**
U	1-1/2	ENCL	1100	230-460/60/3
W	3	ENCL	1100	230-460/60/3
X	SPECIAL			

FIN MATERIAL
A - ALUMINUM**
S - SPECIAL

TUBE MATERIAL
B - .025 COPPER **
C - .049 RED BRASS
E - .049 CUPRO-NICKEL
F - .049 STEEL

* ENCL - Totally Enclosed Motor
EXPL - Explosion Proof Motor

** STANDARD EQUIPMENT

MODEL "S" UNIT HEATERS

UHSA-018S-8C-AAA

UNIT HEATER
MODEL S

DEVELOPMENT SEQUENCE

UNIT SIZE

FULL COIL BTU	MODIFIED COIL BTU
018 - 17,400	019 - 19,300
020 - 20,000	031 - 30,400
038 - 38,700	045 - 45,800
042 - 41,600	053 - 53,300
060 - 60,500	069 - 69,400
070 - 68,200	077 - 76,600
090 - 87,600	091 - 91,000
100 - 96,000	127 - 125,800
126 - 125,700	137 - 135,800
168 - 172,000	181 - 180,700
186 - 185,200	207 - 206,900
230 - 229,700	243 - 238,700
260 - 256,300	273 - 272,200
320 - 324,000	
354 - 355,500	
400 - 404,000	

COIL TYPE
S - STEAM**
W - HOT WATER - WITH FIN SERIES 132 ONLY **

MOTOR

	H.P.	RPM	VOLTAGE	TYPE*
A	1/25	1050	115/60/1**	ENCL
C	1/20	1550	115/60/1**	ENCL
E	1/8	1550	115/60/1**	ENCL
F	1/6	1100	115/60/1**	ENCL
G	1/6	1140	115/60/1**	EXPL
H	1/6	1140	230-460/60/3	ENCL
J	1/4	1100	115/60/1**	ENCL
L	1/4	1100	115/60/1	EXPL
M	1/4	1100	230-460/60/3	ENCL
N	1/2	1100	115/60/1**	ENCL
R	1/2	1100	115/60/1	EXPL
S	1/2	1100	230-460/60/3	ENCL
T	3/4	1100	230-460/60/3	ENCL
X	SPECIAL			

FIN MATERIAL
A - ALUMINUM**
S - SPECIAL

TUBE MATERIAL
A - .031 COPPER**
C - .049 RED BRASS
D - .031 CUPRO-NICKEL
F - .049 STEEL

DESIGN SEQUENCE

FIN SERIES
2 - 132-WITH COIL TYPE "W" ONLY **
8 - 108**
9 - SPECIAL

* ENCL - Totally enclosed motor
EXPL - Explosion proof motor

** STANDARD EQUIPMENT

All Trane Model P and S Unit Heaters are shipped fully assembled and may be used for steam or hot water applications. Coils are factory tested at 300 psig air under water, fans are balanced and motors are prelubricated.

Each unit is packaged individually and marked for proper identification. Use normal care in handling and during installation to prevent damage to the coil fins, fan and casing. Do not set the Model P Unit on the floor with the weight of the unit resting against the fan blades. In this position, the blades may be forced out of balance.

Figures 1, 2 and 3 and Tables 1, 2 and 3 give unit dimensions. Unit weights are listed in Table 6.

INSTALLATION

Place the units at points of greatest heat loss. Blanket outside doorway and provide ample coverage of window areas. Keep units away from obstructions that will impede the full and natural air delivery of the units.

To insure delivery of the heated air to the desired area, follow the maximum distance of throw and mounting heights given in Tables 4 and 5. Mounting heights are to be measured from the floor to the bottom of the unit.

The discharge air temperature on Model P Units may be adjusted after installation. The top of all Model P Units contain a pattern of easily removed air port openings. To lower the discharge air temperature, it is only necessary to open the desired number of air ports.

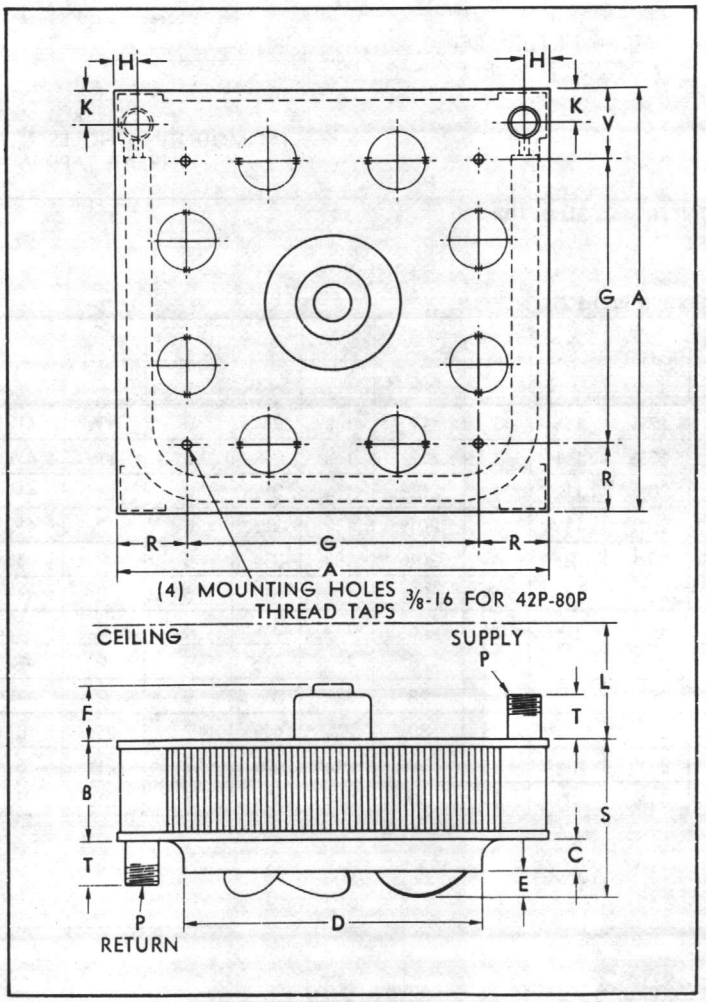

FIGURE 1 — Dimensions, Model P Unit Heater, Sizes 42-80

TABLE 1 - Model P Unit Heater Dimensions* (Figure 1)

Model P	Fan Dia.	A	B	C	D	E	F	G	H	K	L (Min)	P (NPT)	R	S	T	U	V
42P	11¼	18¼	4⅝	1¼	11¾	¾	4	11	1⅜	1⅞	6	1½	3⅝	6⅝	2¾	11	3⅝
64P	13½	21¼	4⅝	1⅝	14	1	4	14	1⅜	1⅞	6	1½	3⅝	7⅛	2¾	14	3⅝
80P	13½	21¼	6⅛	1⅝	14	1	3	14	1⅜	1⅞	6	1½	3⅝	8⅝	2¾	14	3⅝

*INCHES

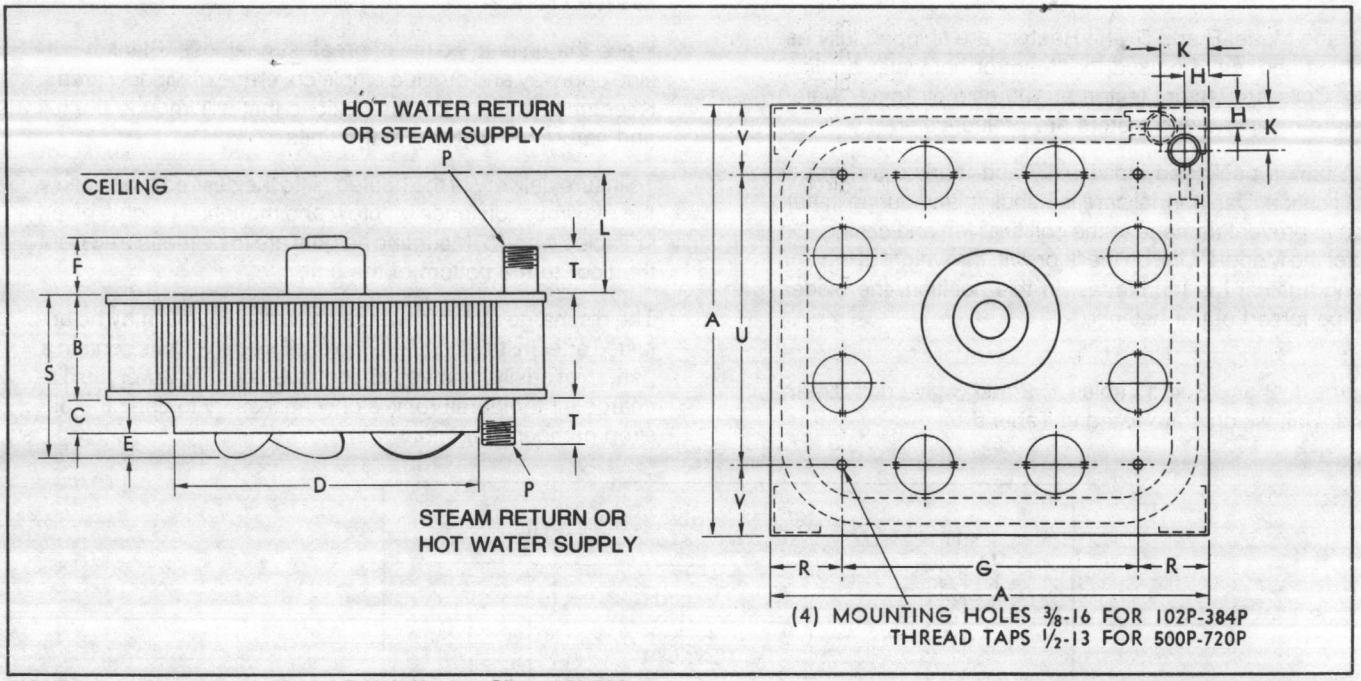

FIGURE 2 — Dimensions, Model P Unit Heater, Sizes 102-720

TABLE 2 - Model P Unit Heater Dimensions*(Figure 2)

Model P V	Fan Dia.	A	B	C	D	E	F	G	H	K	L(Min)	P(NPT)	R	S	T	U	V
102P	16¾	25¼	6⅛	2	17½	1⅛	3	17	1⅜	2¾	6	1½	4⅛	9⅛	2¾	17	4⅛
122P	16¾	25¼	6⅛	2	17½	1¾	3	17	1⅜	2¾	6	1½	4⅛	9¾	2¾	17	4⅛
146P	19¾	29½	6⅛	2⅜	20⅝	1¼	4	20½	1¾	3½	6	2	4½	9⅝	2¾	20½	4½
166P	19¾	29½	6⅛	2⅜	20⅝	1¾	4	20½	1¾	3½	6	2	4½	10⅛	2¾	20½	4½
202P	19¾	29½	7⅝	2⅜	20⅝	2	4	20½	1¾	3½	6	2	4½	12	2¾	20½	4½
252P	25¼	37½	7⅝	3	26⅜	1	3½	28	1¾	3½	6	2	4¾	11⅝	2¾	18	9¾
280P	25¼	37½	7⅝	3	26⅜	1¼	3½	28	1¾	3½	6	2	4¾	11¾	2¾	18	9¾
336P	25¼	37½	7⅝	3	26⅜	2⅛	4	28	1¾	3½	6	2	4¾	12¾	2¾	18	9¾
384P	25¼	37½	9⅛	3	26⅜	2	3½	28	1¾	3½	6	2	4¾	14⅛	2¾	18	9¾
500P	30	42	9⅛	3½	31¼	1⅝	3	30	2¼	4¼	7	2½	6	14¼	3	30	6
600P	30	42	12⅛	3½	31¼	2⅛	3	30	2¼	4¼	7	2½	6	17¾	3	30	6
720P	30	42	13⅜	3½	31¼	3	4	30	2¼	4¼	7	2½	6	20¼	3	30	6

*INCHES

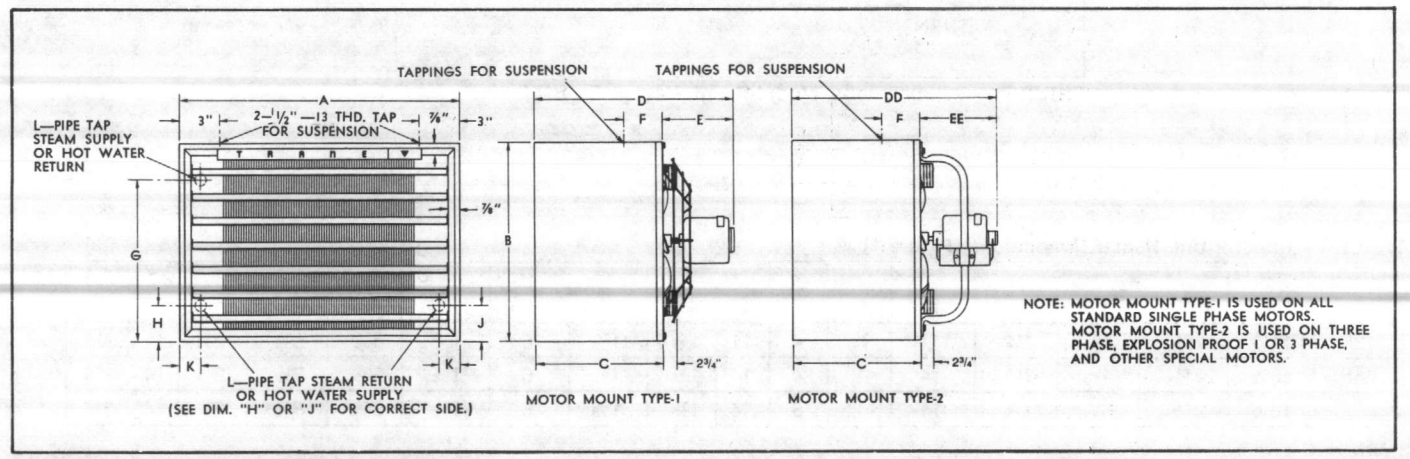

FIGURE 3 — Dimensions, Model S Unit Heater

TABLE 3 — Model S Unit Heater Dimensions (Figure 3)

Model S	Fan Dia.	A	B	C	D	DD	E	EE	F	G	H	J	K	L	No. of Horizontal Louvers Std.	No. of Louver Fin Diffusers
18, 19 & 20S	11¼	20⅞	14¼	9⅜	15⅜	20⅝	6	11¼	3⅛	8⅝	2⅝	—	1¾	1¼		
31S	11¼	20⅞	14¼	9⅜	16⅛	20⅝	6¾	11¼	3⅛	8⅝	—	2⅝	1¾	1¼		
38 & 42S	11¼	20⅞	14¼	9⅜	16⅛	20⅝	6¾	11¼	3⅛	11⅝	2⅝	—	1¾	1¼	4	3
45S	13½	23⅞	17¼	10	17	21¼	7	11¼	3½	11⅝	2⅝	—	2	1¼		
60S	13½	23⅞	17¼	10	17	21¼	7	11¼	3½	14⅝	—	2⅝	2	1¼		
53S	13½	23⅞	17¼	10	17¼	21¼	7¼	11¼	3½	11⅝	2⅝	—	2	1¼		
70S	13½	23⅞	17¼	10	17¼	21¼	7¼	11¼	3½	14⅝	—	2⅝	2	1¼	5	4
69S	13½	26¾	20¼	11¼	18½	22½	7¼	11¼	4⅛	14⅝	—	2⅝	2	1¼		
90S	13½	26¾	20¼	11¼	18½	22½	7¼	11¼	4⅛	17⅝	2⅝	—	2	1¼	6	5
77S	16¾	26¾	20¼	11¼	18¾	22½	7½	11¼	4⅛	14⅝	—	2⅝	2	1¼		
100S	16¾	26¾	20¼	11¼	18¾	22½	7½	11¼	4⅛	17⅝	2⅝	—	2	1¼	6	5
91S	16¾	31⅛	23¼	11¼	21	22½	9¾	11¼	4⅛	14⅝	—	2⅝	2½	1½		
126S	16¾	31⅛	23¼	11¼	21	22½	9¾	11¼	4⅛	20⅝	—	2⅝	2½	1½	7	6
168S	19¾	33¾	26¼	12⅜	22⅛	23⅝	9¾	11¼	4⅝	23⅝	2⅝	—	2½	1½		
186S	19¾	33¾	26¼	12⅜	22⅛	24⅝	9¾	12¼	4⅝	23⅝	2⅝	—	2½	1½		
127S	19¾	33¾	26¼	12⅜	22⅛	23⅝	9¾	11¼	4⅝	17⅝	2⅝	—	2½	1½		
137S	19¾	33¾	26¼	12⅜	22⅛	24⅝	9¾	12¼	4⅝	17⅝	2⅝	—	2½	1½	8	7
181S	19¾	39⅜	32¼	13¼	23	25½	9¾	12¼	5⅛	23⅝	2⅝	—	2½	1½		
230S	19¾	39⅜	32¼	13¼	23	25½	9¾	12¼	5⅛	22⅛	—	2⅝	2	1½	10	9
207S	25¼	39⅜	32¼	13¼	24½	26	11¼	12¾	5⅛	23⅝	2⅝	—	2½	1½		
260S	25¼	39⅜	32¼	13¼	24½	26	11¼	12¾	5⅛	22⅛	—	2⅝	2	1½	10	9
320 & 354S	25¼	52⅛	32¼	13¾	25	26½	11¼	12¾	5⅜	22⅛	—	2⅝	2	1½		
243 & 273S	25¼	52⅛	32¼	13¾	25	26½	11¼	12¾	5⅜	23⅝	2⅝	—	2½	1½	10	9
400S	25¼	52⅛	32¼	13¾	—	26½	—	12¾	5⅜	22⅛	—	2⅝	2	1½	10	9

*INCHES

TABLE 4 — Maximum Distance of Throw and Mounting Height Feet For Model S Unit Heaters

Unit	Outlet Velocity	CFM	Final Temp (F)	Mounting Height	Maximum Throw	
					Without Diffuser	With Louver Fin Set For Maximum Throw
18-S	162	280	117	8	12	15
20-S2	186	318	118	8	15	18
38-S	319	544	126	9	18	22
42-S	347	590	125	9	20	25
60-S	343	815	129	9	22	27
70-S	454	1100	117	10	28	35
90-S	382	1214	127	11	28	35
100-S	476	1535	118	12	28	35
126-S	411	1760	126	13	32	40
168-S	452	2380	127	14	40	50
186-S	528	2808	121	14	45	56
230-S	431	3300	124	15	40	50
260-S	529	4100	118	15	50	62
320-S	442	4480	127	15	50	62
354-S	550	5660	118	15	60	75
400-S	583	6017	122	15	65	80
19-S2	220	390	106	8	18	22
31-S	359	635	104	8	20	25
45-S	363	897	107	9	25	31
53-S	439	1090	105	10	28	35
69-S	407	1337	108	12	30	37
77-S	458	1510	107	13	32	40
91-S	394	1740	108	14	32	40
127-S	448	2440	108	15	40	50
137-S	495	2700	107	15	45	56
181-S	430	3392	109	15	42	52
207-S	514	4059	107	15	48	60
243-S	439	4607	108	15	55	68
273-S	536	5644	105	15	60	75

NOTE: The above is based on 2 psig Steam Pressure, 60 F Entering Air.

TO MEET OSHA REQUIREMENTS, MODEL "S" UNIT HEATERS MUST BE MOUNTED NO LOWER THAN 7.5 FEET FROM THE FLOOR.

TABLE 5 — Maximum Mounting Height In Feet For Model P Unit Heaters

Unit Size	Steam Pressure (PSI)					
	2	5	10	50	100	150
42-P	10.5	10.0	10.0	9.0	7.5	7.5
	12.5	12.0	12.0	11.0	9.5	8.5
42-P LS*	7.5	7.5	7.5	7.5	7.5	7.5
	9.0	8.5	8.5	7.5	7.5	7.5
42-P-L**	12.5	12.0	12.0	10.5	9.0	8.5
	14.5	14.0	13.5	12.0	11.0	10.0
42-P-L LS	9.0	8.5	8.5	7.5	7.5	7.5
	10.5	10.0	10.0	9.0	8.0	7.5
64-P	12.0	11.5	11.5	10.0	9.0	8.0
	14.5	14.0	14.0	12.0	11.0	10.5
64-P LS	9.5	9.0	9.0	8.0	7.5	7.5
	11.5	11.0	11.0	9.5	8.5	8.0
64-P-L	15.0	14.5	14.5	12.5	11.0	10.0
	19.0	18.5	18.5	16.5	16.0	14.0
64-P-L LS	11.5	11.0	11.0	9.5	8.5	8.0
	14.0	13.5	13.5	12.0	11.0	10.0
80-P	15.0	14.5	14.0	12.0	11.0	10.0
	18.5	18.0	17.5	15.5	14.0	13.0
80-P LS	11.0	10.5	10.5	9.0	8.5	8.0
	13.5	13.0	13.0	11.5	11.0	10.0
80-P-L	18.0	17.5	17.5	15.0	13.5	12.0
	22.0	21.0	21.0	19.0	17.0	16.0
80-P-L LS	13.0	12.5	12.0	11.0	10.0	9.0
	17.0	16.5	16.0	14.0	13.0	12.0
102-P	14.0	13.5	13.0	11.5	11.0	10.0
	17.0	16.5	16.0	14.0	13.0	12.0
102-P LS	11.0	10.5	10.5	9.5	8.5	8.0
	13.5	13.0	13.0	12.0	11.0	10.0
102-P-L	17.5	17.0	16.5	15.0	14.0	13.0
	21.5	21.0	20.5	18.5	16.5	16.0
102-P-L LS	15.0	14.5	14.5	13.0	12.0	11.0
	18.5	18.0	18.0	16.0	14.5	13.5
122-P	16.0	15.5	15.5	14.0	13.0	12.0
	19.5	19.0	18.5	17.0	15.5	14.0
122-P-L	21.0	20.5	20.0	17.5	17.0	16.0
	26.0	25.5	25.0	22.5	20.5	19.0
146-P	15.5	15.0	14.5	13.0	11.5	11.0
	19.0	18.5	18.0	16.0	15.0	14.0

Unit Size	Steam Pressure (PSI)					
	2	5	10	50	100	150
146-P-L	18.0	17.5	17.5	15.0	13.5	12.5
	22.5	22.0	21.5	18.5	17.5	16.0
166-P	18.0	17.5	17.0	14.5	13.5	13.0
	22.5	22.0	21.5	19.0	17.5	16.0
166-P-L	22.0	21.5	21.0	18.5	16.5	15.5
	27.5	27.0	26.5	23.5	21.5	20.0
202-P	22.0	21.5	21.0	18.5	16.5	16.0
	27.5	27.0	26.5	24.0	22.0	20.0
202-P-L	25.5	25.0	24.5	22.0	20.0	18.0
	31.5	31.0	30.5	27.0	25.0	23.0
252-P	20.0	19.5	19.0	17.0	15.5	14.0
	25.0	24.0	23.5	20.5	18.5	17.5
252-P-L	24.0	23.5	23.0	20.0	18.0	17.0
	29.5	28.5	28.0	24.5	22.5	21.0
280-P	21.0	20.5	20.0	17.5	16.0	15.0
	26.0	25.5	25.0	22.0	20.0	18.0
280-P-L	25.0	25.0	24.5	21.0	19.0	18.0
	32.0	31.0	30.0	26.0	24.0	23.0
336-P	24.0	23.0	22.0	20.0	18.5	17.0
	30.0	29.0	28.0	25.0	23.5	22.0
336-P-L	29.0	28.5	28.0	25.0	23.0	21.0
	36.0	35.0	34.0	30.0	28.0	26.0
384-P	28.5	28.0	27.5	24.0	22.0	20.0
	35.5	35.0	34.0	30.0	28.0	26.0
384-P-L	32.5	31.5	30.5	27.5	25.5	24.0
	41.0	40.0	39.0	35.0	32.0	30.0
500-P	29.5	29.0	28.5	25.0	23.0	21.0
	36.5	36.0	35.5	32.0	29.0	26.0
500-P-L	35.0	34.0	33.0	29.0	27.0	25.0
	43.5	42.5	41.5	35.0	33.0	31.0
600-P	34.0	33.0	32.0	28.0	26.0	24.0
	42.5	41.5	40.5	36.0	33.0	30.0
600-P-L	37.0	36.0	35.0	31.0	29.0	27.0
	46.5	45.5	44.5	39.0	35.0	33.0
720-P	38.5	37.5	36.5	32.0	29.0	27.0
	48.0	47.0	46.0	40.0	38.0	35.0
720-P-L	42.5	41.5	40.5	35.0	32.0	30.0
	53.0	52.0	51.0	44.0	40.0	37.0

NOTES: *LS = Low Speed
**PL = Model P Low Final Temperature Model With All Air Ports Open.

Figures in shaded areas give maximum mounting height with louver cone diffuser blades set vertically.

The above table is based on 60 F entering air temperature. In providing for the use of diffusers, it must be remembered that adjustment of a LCD to deflect air toward horizontal immediately lowers the mounting height.

TO MEET OSHA REQUIREMENTS, MODEL "P" UNIT HEATERS MUST BE MOUNTED NO LOWER THAN 7.5 FEET FROM THE FLOOR.

TABLE 6 — Unit Weights — Lbs.

Model P*		Model S			
Unit	Weight lbs.	Unit	Weight lbs.	Unit	Weight lbs.
42P	30	18S	40	19S2	40
64P	35	20S2	40	31S	40
80P	40	38S	40	45S	55
102P	55	42S	40	53S	55
122P	55	60S	55	69S	70
146P	80	70S	60	77S	80
166P	80	90S	75	91S	95
202P	85	100S	85	127S	135
252P	135	126S	100	137S	135
280P	135	168S	145	181S	180
336P	135	186S	145	207S	185
384P	175	230S	190	243S	230
500P	250	260S	195	273S	235
600P	260	320S	245		
720P	325	354S	250		
		400S	280		

* P and PL Units

DUCTWORK

Propeller unit heaters are designed primarily for free air delivery and, basically, the propeller fan is not efficient when used with extensive ductwork. However, short runs of duct may be used by observing the following restrictions:

1. Do not use hot water units when entering outside air may be below the freezing point. Use full sized coil with at least 5 psig steam or a modified coil with 10 psig steam for freezing conditions. Steam must be at full pressure during low temperatures.
2. Under no conditions should air filters be used.
3. All ductwork should be kept straight and as simple as possible.
4. The next size larger motor should be used.

The use of ductwork will present a reduction in air volume and unit capacity. Contact the local Trane representative for performance data and ducting recommendations.

UNIT MOUNTING

To meet Occupational Safety and Health Act (OSHA) requirements Model P Unit Heaters must be mounted no lower than 7.5 feet from the floor.

Weld nuts are provided at the top of all units for suspension purposes. See Figures 1, 2 and 3. Figure 4 shows the 2 weld nuts and steel channels provided on Model S Units. Support rods should support the total unit weight to assure that no strain is placed on supply and return piping. Provisions for removal of the unit from the suspension rods may be desirable for servicing purposes.

Units must hang level vertically and horizontally.

Provide sufficient clearance around units for maintenance purposes. This includes at least 7 inches above all Model P Unit Heaters even though the motor is removable through the bottom.

Isolators are not required but may be desirable for some applications. For these special cases, contact the local Trane representative. Refer to Table 6 for Unit Weights.

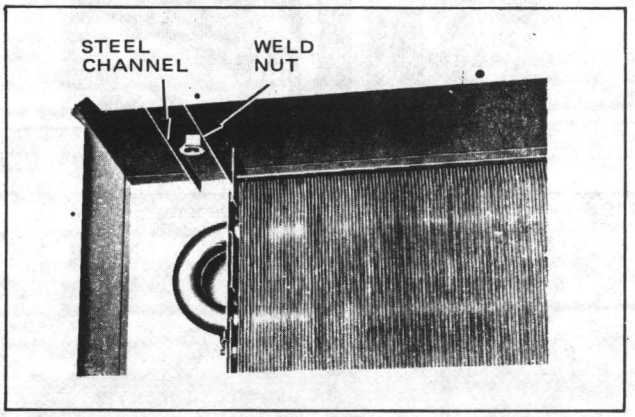

FIGURE 4 — Model S Unit Mounting Channel and Weld Nut

PIPING

To provide proper coil operation, follow all piping recommendations listed in this manual.

Threaded pipe headers are provided on all Model P Units for piping connections. See Figure 5. Connections are given in Figures 1 and 2 and Tables 1 and 2.

Model S Units have male type threaded pipe connections that are bolted to the casing backplate while pipe connections are being made. See Figure 6. Connection sizes are given in Figure 3 and Table 3.

Follow standard practices and codes when installing the piping. Provide swing joints for expansion purposes, unions and shut-off valves for servicing purposes and, as illustrated in Figures 7 through 11, valves and traps for control purposes. Use 45 degree angle run-offs from all supply and return mains.

Dirt pockets should be the same pipe size as the return tapping of the unit heater. Also, pipe size in the branch-off should be the same size as the tapping in the traps. Beyond the trap, the return lateral pipe should be increased one size up to the return main.

Tables 7 and 8 list recommended steam trap selections.

WIRING

The installer shall furnish all wiring to the fan motor. Connections are shown in Figures 12 and 13. See "Operating Information — Motors" for a discussion of the standard motors used with model S and P unit heaters.

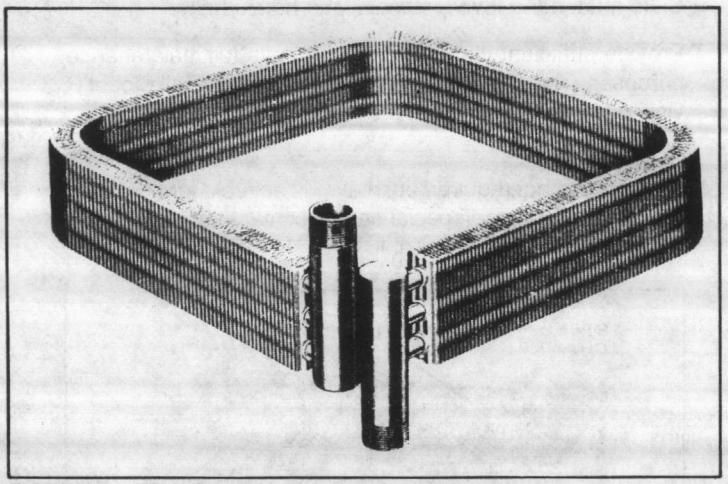

FIGURE 5 — Model P Unit Heater Coil and Headers

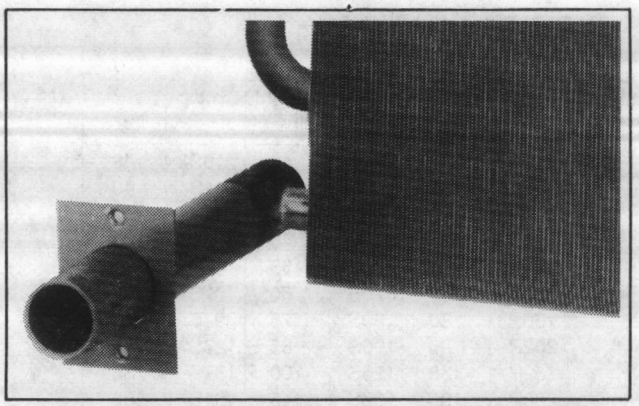

FIGURE 6 — Model S Unit Heater Coil and Piping Coupling

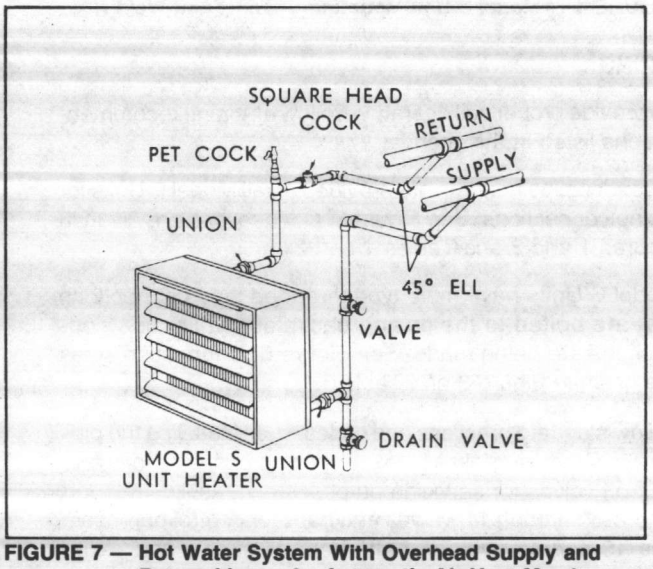

FIGURE 7 — Hot Water System With Overhead Supply and Return Lines. An Automatic Air Vent May be Substituted for the Pet Cock if Desired

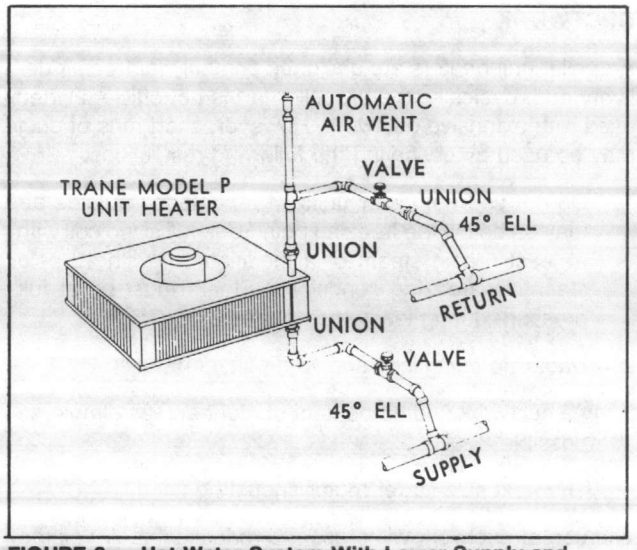

FIGURE 8 — Hot Water System With Lower Supply and Return Lines on a Model P Unit. Pet Cock May Replace Automatic Air Vent

TABLE 7 — Steam Trap Selection — Model P Unit Heaters

	2 PSIG	5 PSIG		10 PSIG		15 PSIG		30 PSIG		50 PSIG		100 PSIG	
Model P Size	F-T Trap	F-T Trap	Bucket Trap	F-T Trap	Bucket Trap	F-T Trap	Bucket Trap	F-T Trap	Bucket Trap	F-T Trap	Bucket Trap	F-T Trap	Bucket Trap
42-166	¾" 55AL	¾" 55 AL	No. 62	¾" 55AL	No. 62	¾" 55AL	No. 62	¾" 55AM	No. 62	¾" 55AM	No. 62	¾" 55AH	No. 62
202-252	1" 55AL	1" 55AL	No. 62	1" 55AL	No. 62	1" 55AL	No. 62	¾" 55AM	No. 62	¾" 55AM	No. 62	¾" 55AH	No.191
280	1" 55AL	1" 55AL	No. 62	1" 55AL	No. 62	1" 55AL	No. 62	¾" 55AM	No. 62	¾" 55AM	No. 62	¾" 55AH	No. 191
336	1" 55AL	1" 55AL	No. 62	1" 55AL	No. 62	1" 55AL	No. 62	¾" 55AM	No. 191	¾" 55AM	No. 191	1¼" 66CH	No. 191
384	1" 55AL	1" 55AL	No. 191	1" 55AL	No. 62	1" 55AL	No. 62	¾" 55AM	No. 191	¾" 55AM	No. 191	1¼" 66CH	No. 191
500	1¼" 66CL	1¼" 66CL	No. 191	1¼" 66CL	No. 191	1¼" 66CL	No. 62	1¼" 66CM	No. 191	1¼" 66CM	No. 191	1¼" 66CH	No. 351
600	1¼" 66CL	1¼" 66CL	No. 191	1¼" 66CL	No. 191	1¼" 66CL	No. 191	1¼" 66CM	No. 191	1¼" 66CM	No. 191	1¼" 66CH	No. 351
720	1¼" 66CL	1¼" 66CL	No. 191	1¼" 66CL	No. 191	1¼" 66CL	No. 191	1¼" 66CM	No. 191	1¼" 66CM	No. 191	1½" 77HH	No. 351

NOTE: Above selections of Trane Company Traps are based on cataloged unit capacities. A load factor of 2 has been used.

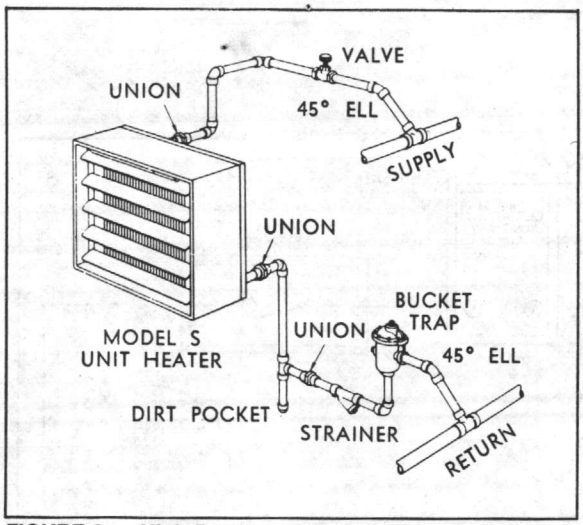

FIGURE 9 — High Pressure Steam System. Top of Bucket Trap Must Be Located Below Return Outlet of Coil to Assure Complete Drainage of Condensate

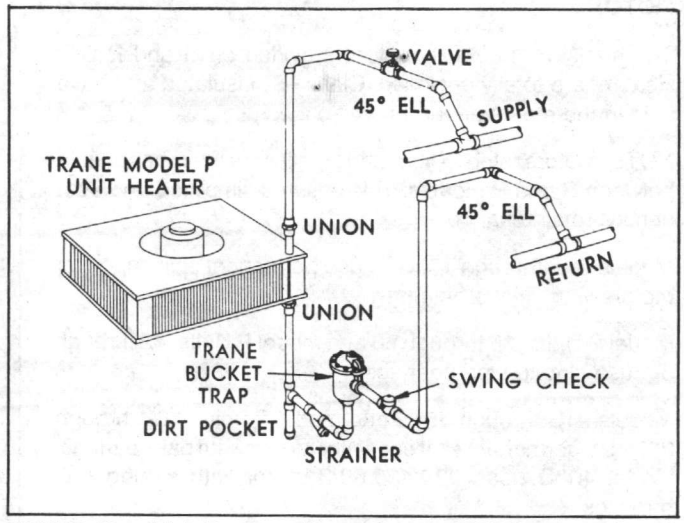

FIGURE 10 — High Pressure Steam System With Overhead Supply and Return Mains. Place Bucket Trap Below Coil Return Outlet for Proper Condensate Drainage

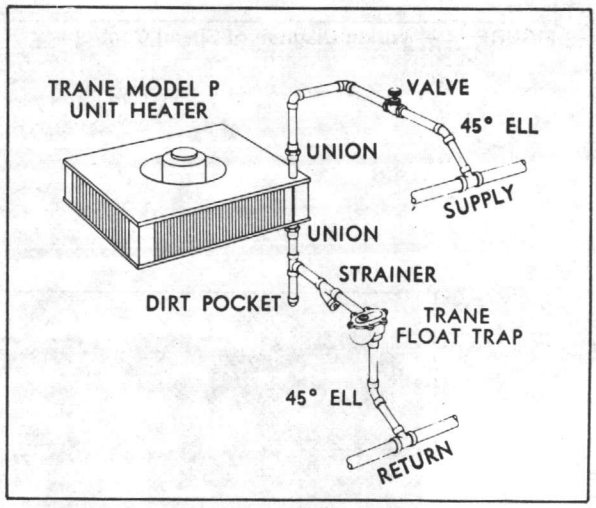

FIGURE 11 — Vapor or Vacuum System With Lower Supply and Return Mains

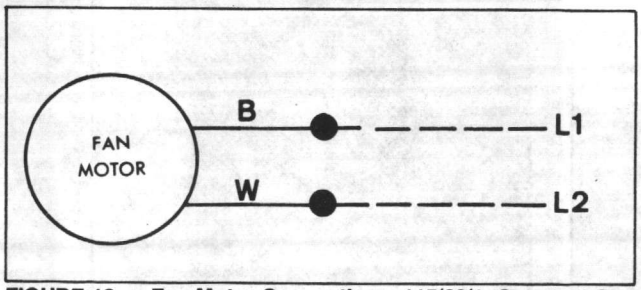

FIGURE 12 — Fan Motor Connections, 115/60/1, Constant Speed, Two Lead (G.E., Marathon, Universal)

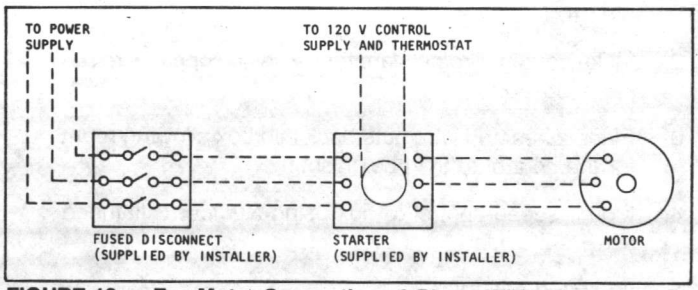

FIGURE 13 — Fan Motor Connections 3 Phase Wiring

TABLE 8 — Steam Trap Selection — Model S Unit Heaters

Model P Size	2 PSIG	5 PSIG		10 PSIG		15 PSIG		30 PSIG		50 PSIG		100 PSIG	
	F-T Trap	F-T Trap	Bucket Trap	F-T Trap	Bucket Trap	F-T Trap	Bucket Trap	F-T Trap	Bucket Trap	F-T Trap	Bucket Trap	F-T Trap	Bucket Trap
18-137	¾" 55AL	¾" 55AL	No. 62	¾" 55AL	No. 62	¾" 55AL	No. 62	¾" 55AM	No. 62	¾" 55AM	No. 62	¾" 55AH	No. 62
160-186	¾" 55AL	¾" 55AL	No. 62	¾" 55AL	No. 62	¾" 55AL	No. 62	¾" 55AM	No. 62	¾" 55AM	No. 62	¾" 55AH	No. 191
207-243	1" 55AL	1" 55AL	No. 62	1" 55AL	No. 62	1" 55AL	No. 62	¾" 55AM	No. 62	¾" 55AM	No. 62	¾" 55AH	No. 191
260-273	1" 55AL	1" 55AL	No. 62	1" 55AL	No. 62	1" 55AL	No. 62	¾" 55AM	No. 62	¾" 55AM	No. 62	¾" 55AH	No. 191
320	1" 55A1	1" 55AL	No. 62	1" 55AL	No. 62	1" 55AL	No. 62	¾" 55AM	No. 191	¾" 55AM	No. 191	1¼" 66CH	No. 191
354	1" 55AL	1" 55AL	No. 191	1" 55AL	No. 62	1" 55AL	No. 62	¾" 55AM	No. 191	¾" 55AM	No. 191	1¼" 66CH	No. 191
400	1¼" 66CL	1¼" 66CL	No. 191	1¼" 66CL	No. 191	1¼" 66CL	No. 191	1¼" 66CM	No. 191	1¼" 66CM	No. 191	1¼"66CH	No. 351

NOTE: Above selections of Trane Company Traps are based on cataloged unit capacities. A load factor of 2 has been used.

MOTORS

The standard 115/60/1 motors provided on S and P Unit Heaters are totally enclosed, Class "B" insulated and have built-in thermal overload protection.

NOTE: Motors rated ½ H.P. and smaller are interchangeable between S and P models. This assures simplified and economical maintenance.

Models 53S through 100S — use permanent split capacitor motors with sleeve bearings.

Model S Units, 18 through 60 and model P Units, 42 through 80, use sleeve type bearings.

Models 91S through 354S and model P units, 122 through 280, use permanent split capacitor motors with ball bearings. Model 400S uses 230/460/60/3 motor with sealed ball bearings.

All sleeve bearing motors have oil holes to allow lubrication. Ball bearing motors are permanently lubricated although some three phase or special motors have removable plugs which will allow field installation of grease fittings.

The standard 42P through 102P and 18S through 100S motors can be converted to variable speed operation with the addition of the solid state speed control.

See Figures 12 and 13 for typical wiring diagrams.

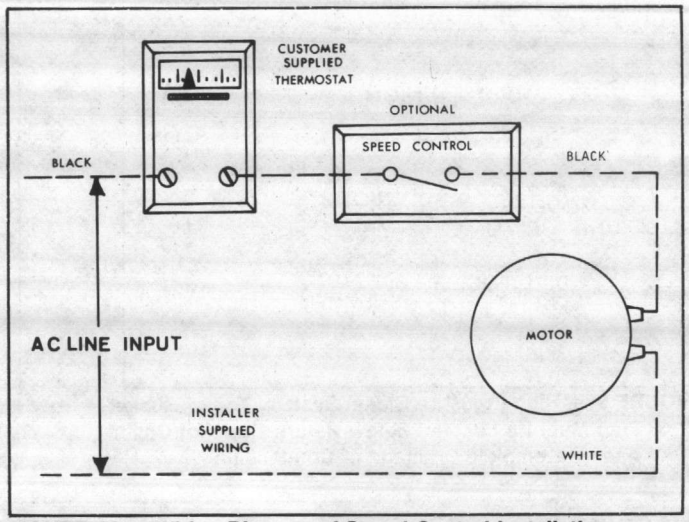

FIGURE 14 — Wiring Diagram of Speed Control Installation

VARIABLE SPEED CONTROL

The solid state speed controller may be installed at any convenient location and is suitable for surface or flush type mounting. A standard electrical single or double gang wall box is recommended as in Figure 14.

Installation procedure:

1. Attach the control's leads to the electrical leads in the control box using wire nuts. The speed control is to be wired in series with the motor. See wiring diagram in Figure 14.
2. Make certain wire nuts are tight with no copper wire being exposed.
3. Place wires and wire nuts back into box allowing room for the control to fit in box also.
4. Mount speed control to box using Number 6 flathead screws provided.

Setting speed control:

1. Turn the control shaft fully clockwise. If the motor is not running at the desired low speed, adjust the trim on the face of the control for low speed setting using a small screwdriver.
2. Rotate the control shaft counter clockwise. The speed will increase smoothly from minimum to maximum and then switch off.
3. Mount face plate with screws provided and attach control knob. See Figure 15.

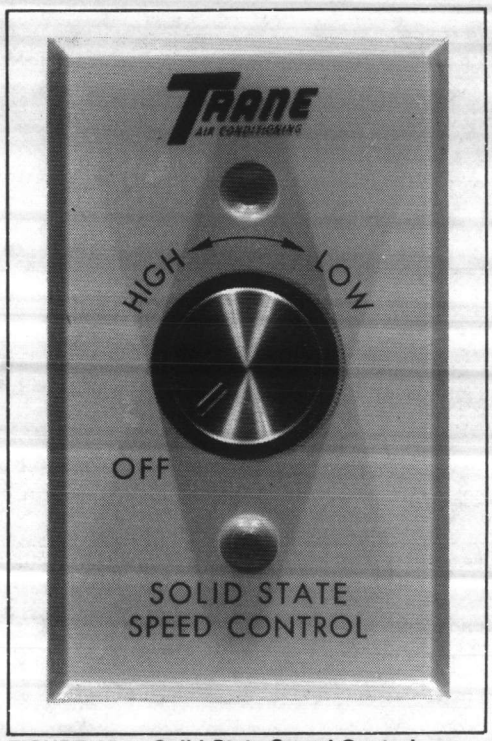

FIGURE 15 — Solid State Speed Control

DIFFUSERS (Optional Equipment)

MODEL P LOUVER CONE DIFFUSER

Rubber mounts and mounting nuts and bolts are provided with each louver cone diffuser. Attach the diffuser to the bottom of the unit heater as shown in Figure 16. Mounting holes are provided in the unit base plate.

Adjust the diffuser to provide the desired air pattern.

MODEL S LOUVER FIN DIFFUSER

Turn all horizontal louvers on the unit heater, except the top louver, downward to allow installation of the diffuser.

Starting with the second horizontal louver from the top, position a diffuser between the louvers with the collar of the diffuser over the rear edge of the louver. The diffuser fins should be extended upward between the first and second horizontal louvers. Press the diffuser collar down over the louver. The dimples on the collar will hold the row of diffusers firmly in place. See Figures 17, 18 and 19.

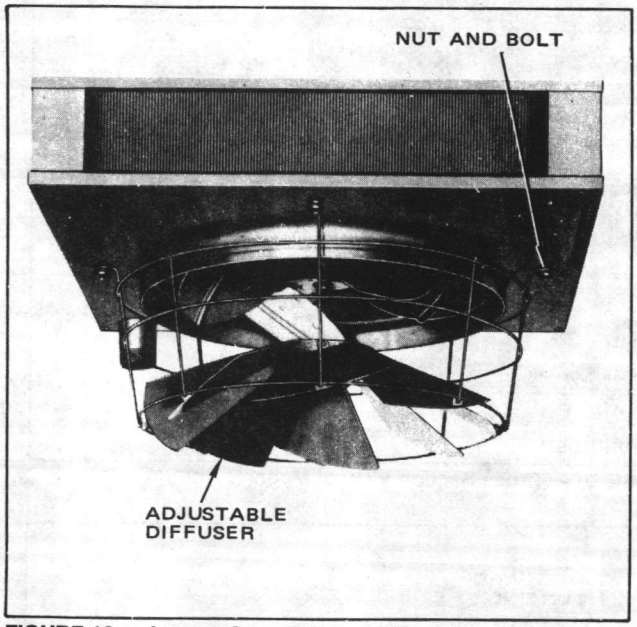

FIGURE 16 — Louver Cone Diffuser Attached to Model P Unit Heater

OPERATING INFORMATION

COILS

Standard Model S Unit Heater coils have 1" O.D. x .031" wall copper tubing and standard Model P Unit Heater coils use ⅝" O.D. x 0.25" wall copper tubing. Maximum recommended steam pressure for standard units is 75 psig at 325 F temperature. For hot water applications, the maximum recommended pressure is 200 psig for Model S and 225 psig for Model P Units with 325 F water temperature for both units.

For higher operating temperatures and pressures, special coils are required. Table 9 outlines the limitations for various coil tube materials.

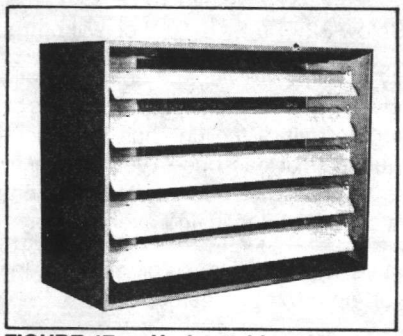

FIGURE 17 — Horizontal Louvers

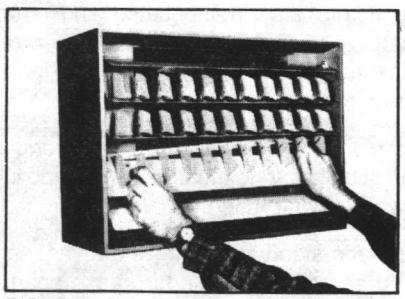

FIGURE 18 — Installing Fin Diffusers

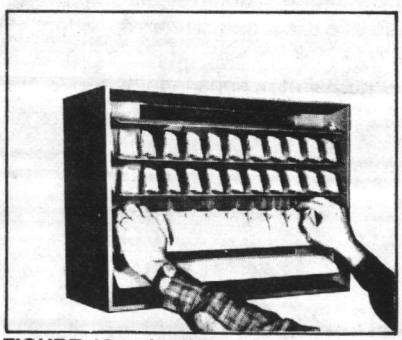

FIGURE 19 — Installing Collar

TABLE 9 — Coil Tube Limitations (Pressure/Temperature)

Tube Material	Tube		Steam		Hot Water	
Model S	O.D.	Wall	Pres. PSIG	Deg. F	Pres. PSIG	Deg. F
Copper (Std.)	1"	.031	75	325	200	325
Red Brass	1"	.049	200	400	260	390
90-10 Cupronickel	1"	.031	300	450	400	450
Steel	1"	.049	600	450	600	450
Model P						
Copper (Std.)	⅝"	.025	75	325	225	325
Red Brass	⅝"	.049	200	425	300	425
90-10 Cupronickel	⅝"	.049	400	450	600	450
Steel	⅝"	.049	600	450	600	450

MAINTENANCE

Allow rotating fans to stop before servicing to avoid injury to fingers and hands.

MOTOR LUBRICATION

Sleeve Bearings

Motors with oilers or oil holes are lubricated before shipment with a good grade of electric motor oil. Refill when necessary with the motor at a stand-still until oil reaches the proper level.

Use SAE 20W oil for motors operating in ambient temperatures of 32 F to 100 F. Above 100 F, use an SAE 30 to SAE 50 oil. Below 32 F, a SAE 10W oil will be required.

The frequency of oiling will depend upon operating conditions and length of running time. Inspect the oilers or oil holes when cleaning the unit. If the unit has a fractional horsepower motor, lubricate at least once a year. Under high ambient conditions or constant fan operation, fractional horsepower motors should be lubricated every 90 days.

On those motors without oilers or oil holes, follow the instructions given on the motor nameplate.

Ball Bearings

Ball bearing motors are pre-lubricated and normally not equipped with grease fittings. However, motors are equipped with removable grease plugs to allow installation of grease fittings if desired by the owner.

Motor manufacturers do not recommend or require on the job lubrication of ball bearing motors. If on the job lubrication is required by the owner, use the following procedure:

With the motor at a stand-still, remove the vent and grease plugs. Install grease fitting and add grease sparingly. Remove the old grease from the vent relief chamber. Operate the motor a few minutes before reinstalling the vent plug to allow excess grease to escape. If there is evidence of grease working out around the motor shaft, less grease should be added and the greasing periods lengthened. If grease continues to appear, take the motor to the motor manufacturer's authorized service station for repair.

NOTE: Consult local motor manufacturer's service facility for information on type of grease and oil to be used.

FAN AND MOTOR ASSEMBLY

For cleaning or maintenance purposes, the fan and motor assembly may be removed easily from the Unit Heater. The motor is attached to the fan guard which is, in turn, mounted to the top or back panel of the unit as shown in Figures 20 and 21.

On Model P Units, reach up through the fan and remove the fan guard mounting screws. Lower the motor, fan and fan guard assembly down through the fan outlet. If desired, the top and bottom panels may be removed from the coil by taking out the four panel mounting bolts. See Figure 21.

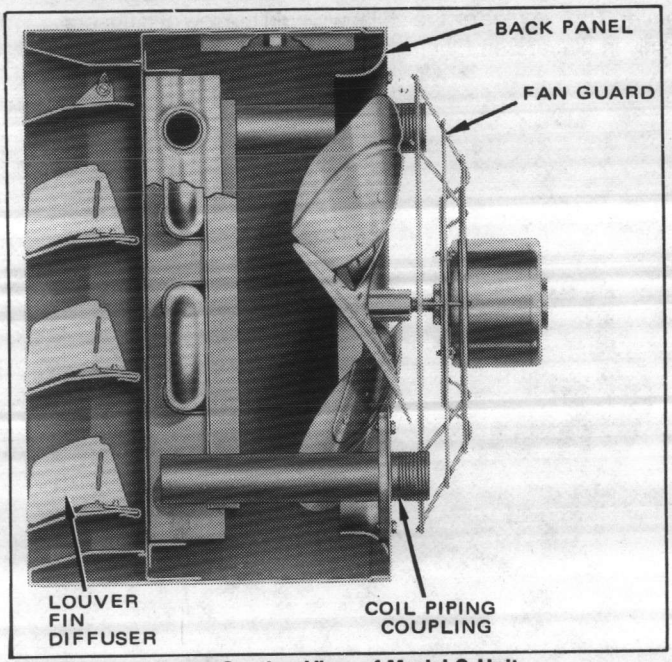

FIGURE 20 — Cross Section View of Model S Unit

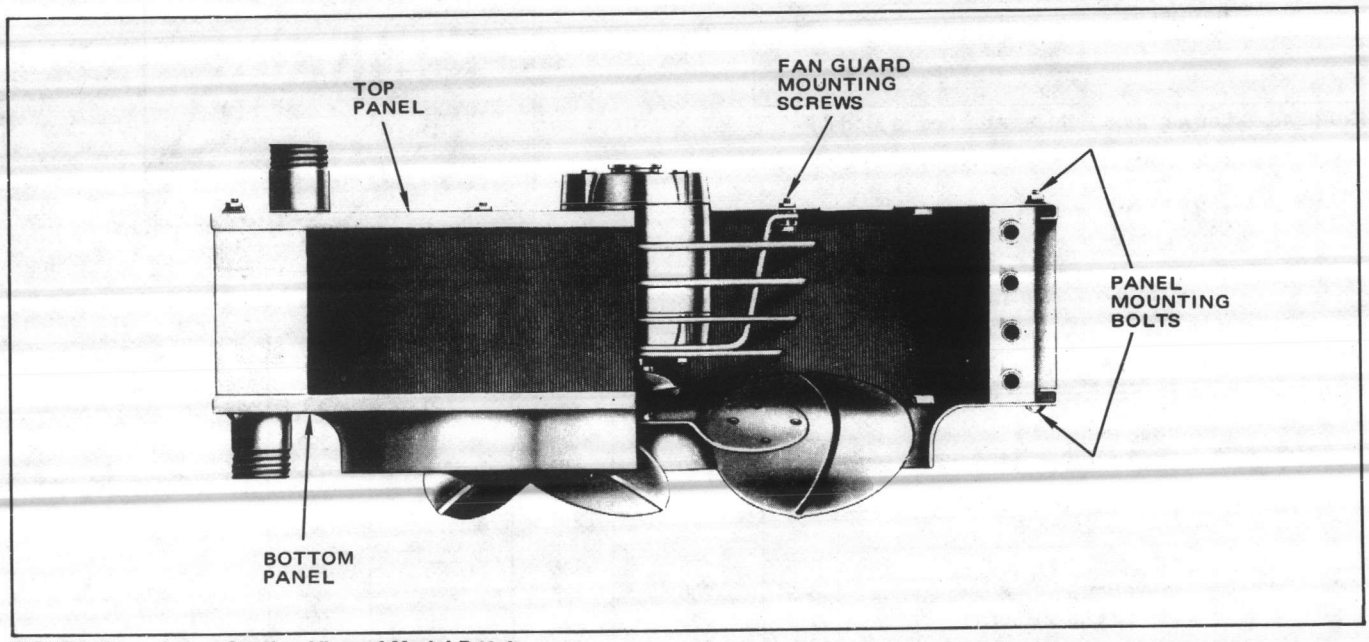

FIGURE 21 — Cross Section View of Model P Unit

On Model S Units, loosen the fan guard mounting screws and lift the motor, fan and fan guard assembly away from the unit. The one-piece back panel may also be removed and slid back over the connecting piping for greater access. See Figure 20.

CLEANING THE UNIT

The unit casing, fan, diffuser and coil should be cleaned thoroughly once a year.

Coil heat transfer efficiency depends on cleanliness. The following recommended procedures may be performed when lubricating the motor and cleaning the coil.

1. Wipe all excess lubricant from the motor, fan and casing. Clean the motor thoroughly. A dirty motor will run hot and eventually cause internal damage.
2. Clean the coil:
   a. Loosen the dirt with a brush on the fan side of the coil. Operate the motor allowing the fan to blow the loosened dirt through the unit.
   b. Use high pressure air or steam on the side of the coil away from the fan..

      NOTE: A piece of cheesecloth or burlap bag may be used to collect the large particles during the cleaning process.
3. Clean the casing, fan blades, fan guard and diffuser using a damp cloth. Any rust spots on the casing should be cleaned and repainted.
4. Tighten the fan guard, motor frame and fan bolts. Check the fan for clearance in the panel orifice and free rotation.

REPLACEMENT PARTS

Should service or replacement of parts be required, give complete nameplate identification including the unit serial number. Motors and motor controls supplied with these units are not manufactured by The Trane Company. Service instructions issued by the manufacturers of these items supersede the previous instructions and should be followed in maintaining the units.

FOR FURTHER INFORMATION ON THIS PRODUCT OR OTHER TRANE PRODUCTS, REFER TO THE "TRANE SERVICE LITERATURE CATALOG", ORDERING NUMBER IDX-IOM-1. THIS CATALOG CONTAINS LISTINGS AND PRICES FOR ALL SERVICE LITERATURE SOLD BY TRANE. THE CATALOG MAY BE ORDERED BY SENDING A $15.00 CHECK TO: THE TRANE COMPANY, SERVICE LITERATURE SALES, 3600 PAMMEL CREEK ROAD, LA CROSSE, WI 54601.

TO HELP ENSURE OPTIMUM PERFORMANCE, BE SURE TO SPECIFY QUALITY TRANE PARTS.

PRINTED BY PRODUCTION SERVICES — LA CROSSE

KC/LW

TRANE™

Installation WF-IN-3C

Library	**Service Literature**
Product Section	**Air Term Devices and Htg Prod**
Product	**Finned Tube Radiation**
Model	**WF**
Literature Type	**Installation**
Sequence	**3C**
Date	**December 1985**
File No.	**SV-TD-FIN-WF-IN-3C-1285**
Supersedes	**WF-IN-3B 384**

HYDRONIC ARCHITECTURAL WALL-FIN

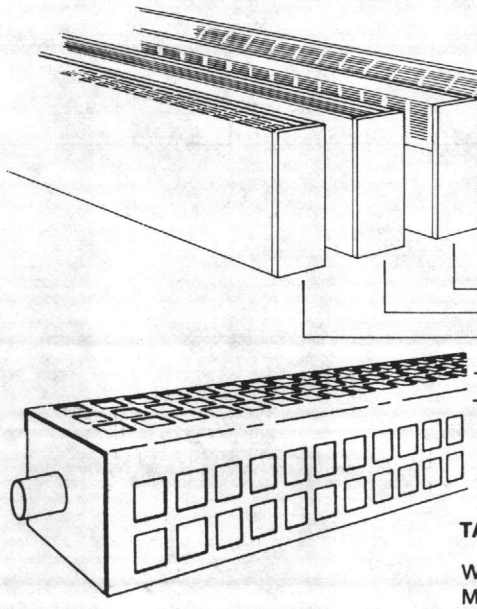

NOTE: This installation manual covers the Trane Hydronic Architecural Wall-Fin models shown above.

TABLE OF CONTENTS

Wall-Fin Components 2-3
Mullion Channels (Optional) 4
Sill Extensions (Optional) 4
Mounting Strips 4
End Panels (Optional) 5
Back Panel (Optional) 6
Enclosure Brackets 6
Element and Pipe Supports (Optional) 7
Elements 7
Enclosures 8
Accessories 10
Inverted Enclosures 12
Tamper-Proof Fasteners 12
Front and Bottom Inlet Grilles 13
Dampers 13
Type X and CS Enclosures 18
Field Painting 18

Since The Trane Company has a policy of continuous product improvement, it reserves the right to change specifications and design without notice. The installation and servicing of the equipment referred to in this booklet should be done by qualified, experienced technicians.

WALL-FIN COMPONENTS

For proper wall-fin installation, the components should be installed in the sequence outlined in this manual. Note that some items are optional and may not be required for each specific job.

Figures 1 and 2 identify the components used in a typical wall-fin installation. Detail drawings of mounting locations are shown on page 3.

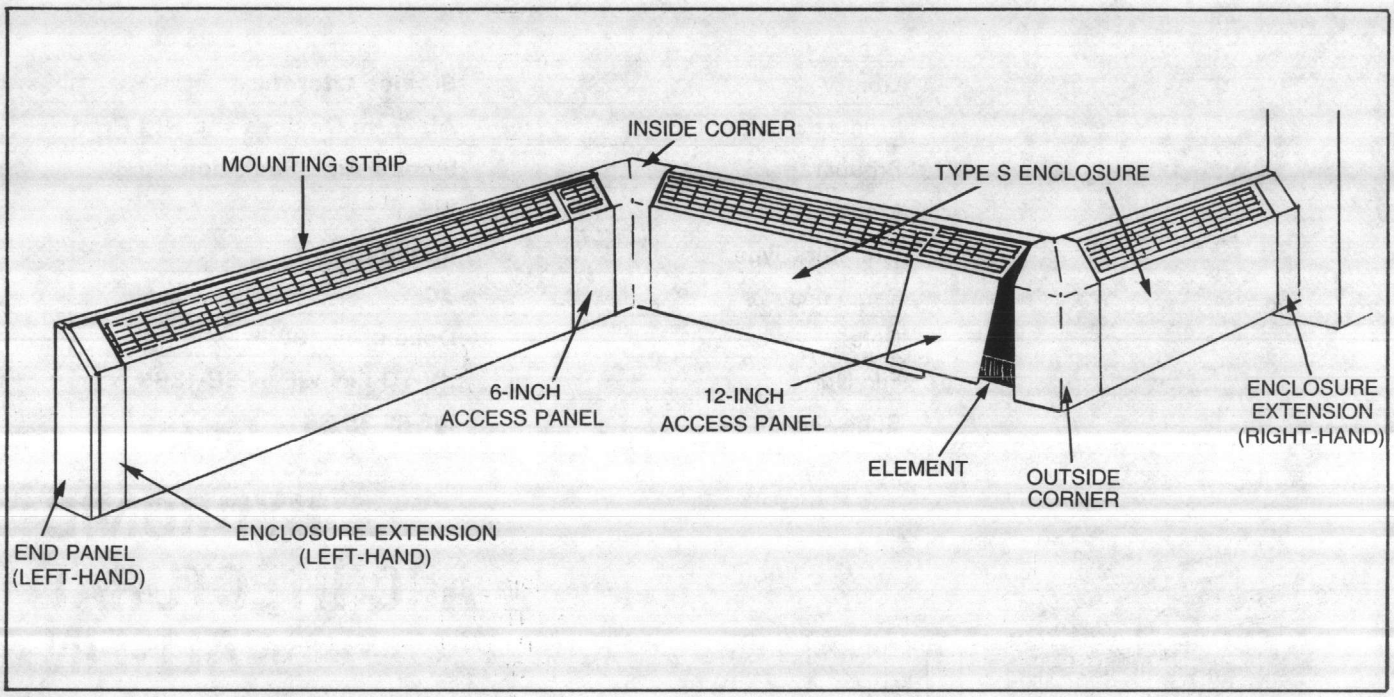

FIGURE 1 - Exterior Component Identification

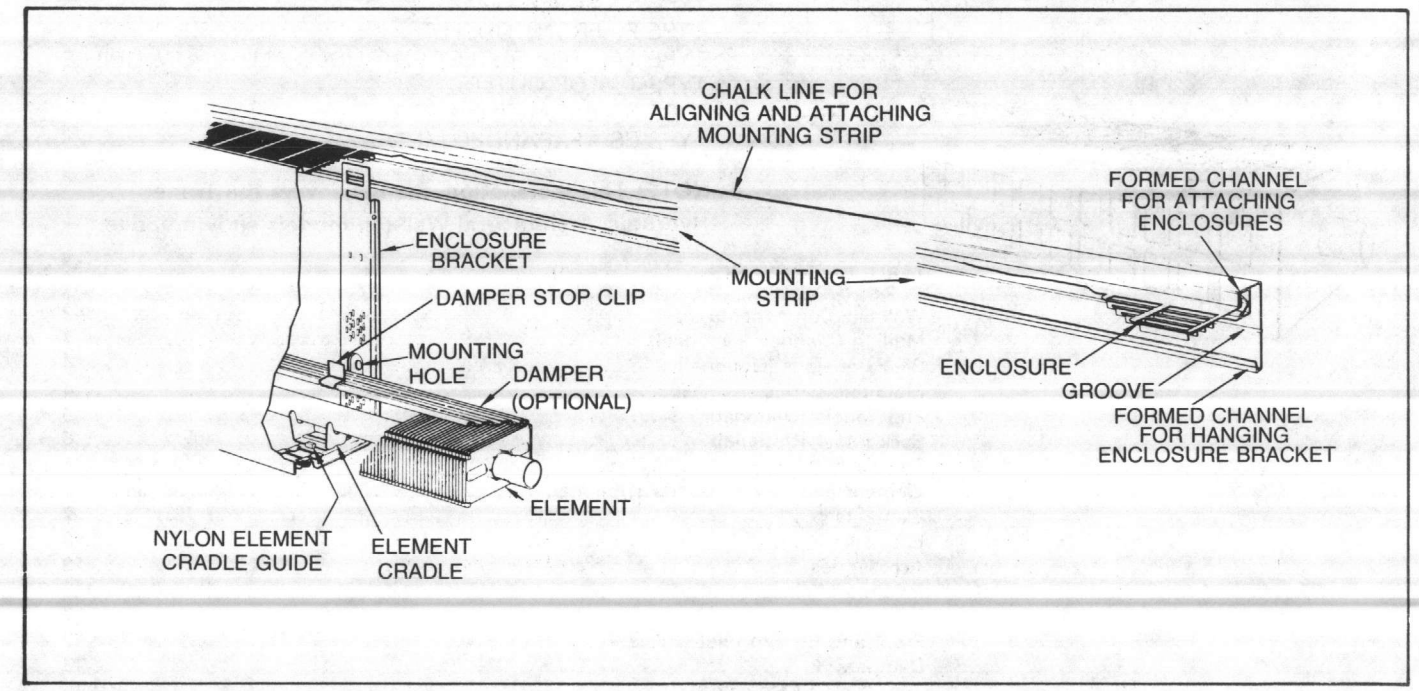

FIGURE 2 - Interior Component Identification

S-Enclosure

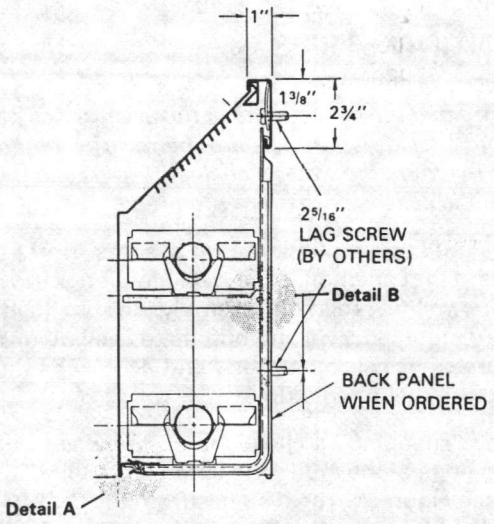

TA-Enclosure

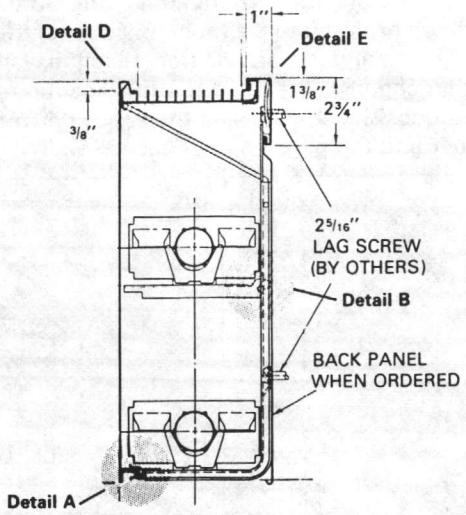

Enclosure Bracket

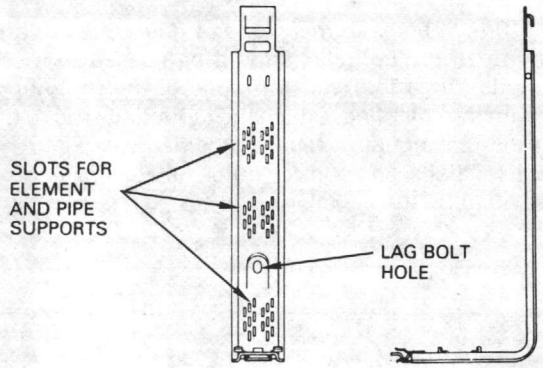

Detail C

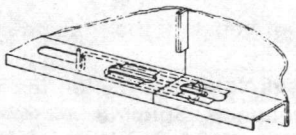

Panel to panel connection showing slide bolt.

Detail A

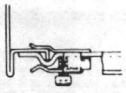

Front panel enclosure bracket connection.

Detail B

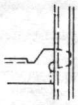

Element support to enclosure bracket mounting.

Detail D

TA - Front panel mounting to extruded aluminum grille.

Detail E

TA - Extruded aluminum grille and mounting strip connection.

MULLION CHANNELS

Mullion channels are used on panel walls or curtain walls where the wall studs (or mullions) are more than four feet apart and project into the room. Because of the weight of the wall-fin unit and the lack of strength in the wall construction, mullion channels are used to provide support between the wall studs. The channels fill the space between the wall-fin cabinet and the panel wall or curtain wall.

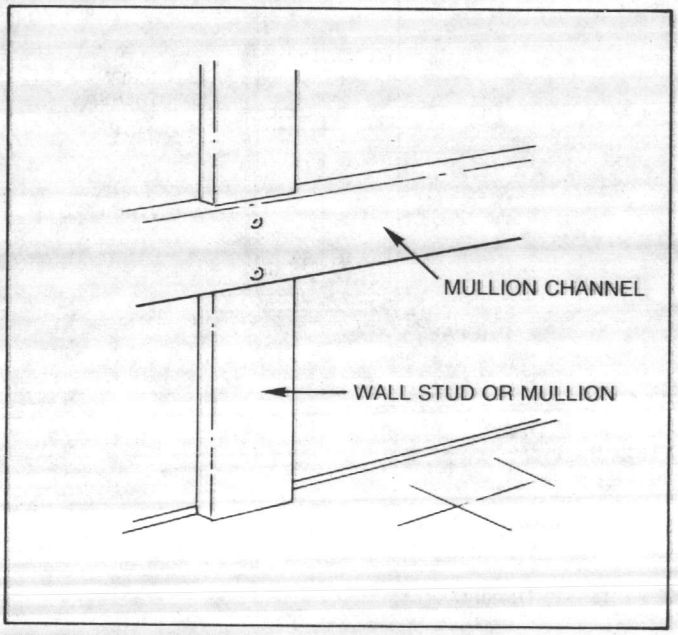

FIGURE 3 - Installing Mullion Channels

The top and bottom edges of the mullion channels should be notched to fit the wall studs or mullions. Attach the channels to the wall studs and fasten the wall-fin mounting strips to the channels. Suitable fasteners must be provided by the installer. See Figure 3.

Attach the bottom of the enclosure brackets to the mullions, to furring strips, or to additional mullion channels.

SILL EXTENSIONS

Sill extensions are used to extend the top of the cabinet back to the wall or window sill. They can add up to 14 inches of continuous surface to the top of the unit.

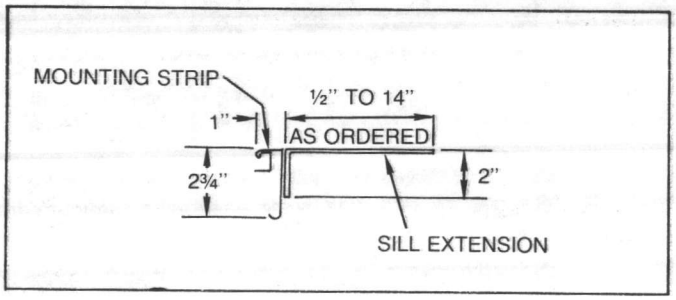

FIGURE 4 - Installing the Sill Extension

The sill extension is a separate angle piece and is to be installed at the same time as the mounting strip. The front 90-degree edge of the sill extension should be butted up to the back side of the mounting strip, as shown in Figure 4.

Both the sill extension and the mounting strip are secured at the same time, using the installation procedure outlined in the "Mounting Strips" section of this manual.

MOUNTING STRIPS

NOTE: *Before cutting the mounting strips for a specific job, make sure that the dimensions of the accessories have been taken into consideration. The mounting strip should be long enough to mount the wall-fin enclosure, plus end panels and any other accessories that are required.*

The straight-edge mounting strip assures a proper fit, regardless of the condition of the wall. Mounting strips support the entire wall-fin radiation assembly. Be sure the mounting strips are mounted level and butt up to each other properly. Enclosures, enclosure brackets, and accessories attach directly to the mounting strip.

Begin by "snapping" a chalk line on the wall to which the rear, top edge of the mounting strip will be aligned and fastened (see Figure 2). The distance from the chalk line to the floor should equal the height of the enclosure, plus an allowance of either four, five, or six inches, depending on the enclosure height. Mounting heights are shown in Figure 5. For example, with a 12-inch high enclosure the chalk line should be 18 inches above the floor line, and with a 16-inch high enclosure the chalk line should be 21 inches from the floor line.

Drill 5/16 inch holes in the grooved guide provided on the mounting strip. The holes should be spaced to match the wall studs. Align the rear, top edge of the mounting strip flush with the chalk line. Attach the mounting strip to the wall using the rectangular washers provided (see Figure 6) and 1/4-inch lag bolts. Lag bolts or other suitable fasteners are to be provided by the installer.

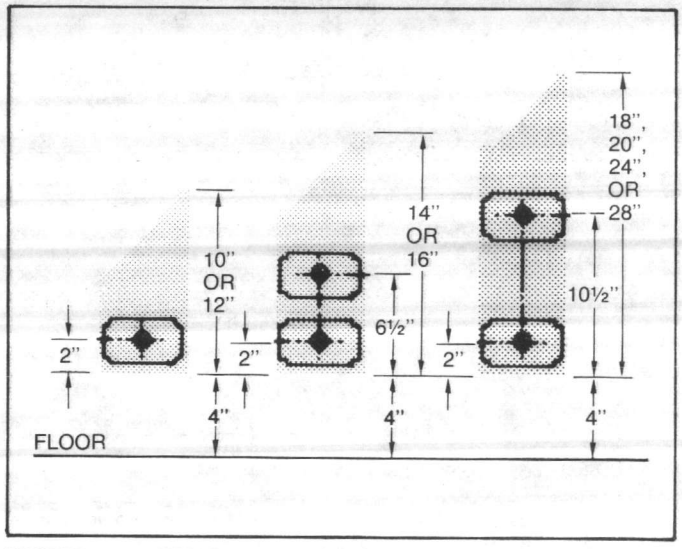

FIGURE 5 - Wall-Fin Mounting Heights

The rectangular washers must be used to provide a stiffening effect and help prevent any distortion of the strip should excessive weight be applied to the installed unit.

Mounting strips may be butted together or cut as necessary to provide the required length of run along the wall.

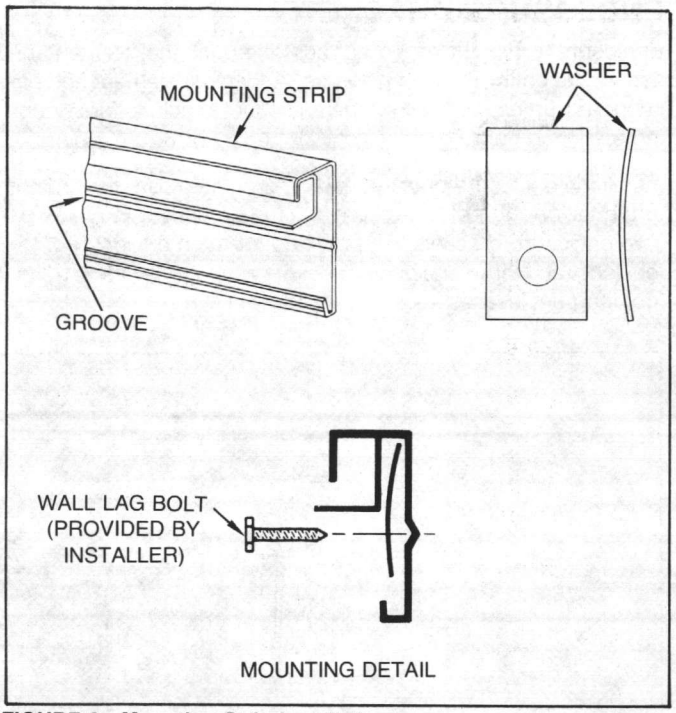

FIGURE 6 - Mounting Strip Installation

END PANELS

Install end panels at the same time as the mounting strip. Each end panel requires 3/4-inch on the mounting strip for proper mounting. Slide the formed tongue on the top back of the end panel (shown in Figure 8) into the space formed by the top and bottom channels of the mounting strip (shown in Figure 6).

Each end panel should be nailed to the wall through the nail holes provided in the rear flange. See Figure 8.

As shown in Figure 8, a hole is provided in the bottom flange for a sliding bolt. If the end panel is attached next to an enclosure or next to 6-inch or 12-inch access panels, engage the slide bolt into the end panel slide bolt hole for proper alignment.

WALL-TO-WALL INSTALLATION WITH END PANELS

End panels are one inch wide and take up 3/4-inch on the mounting strip. (See the "End Panels" section of this manual for proper mounting procedure.) Allow 1/4-inch clearance at the wall so there will be enough room to properly mount each end panel. Make sure the mounting strip is 1/2-inch shorter and the enclosure is two inches shorter than the wall-to-wall dimension. Refer to the example in Figure 7.

The mounting strip can be cut if necessary to provide the required length of run.

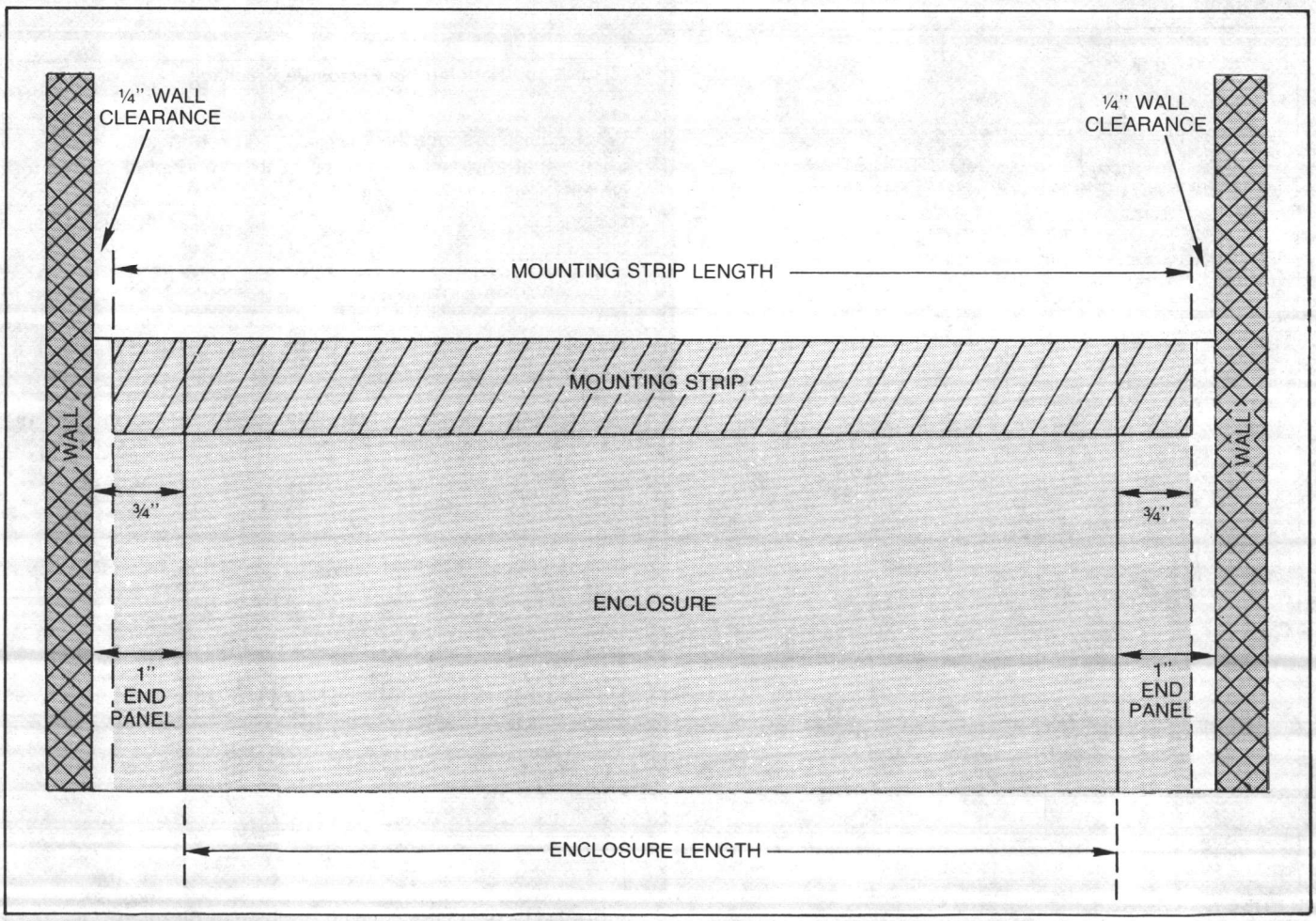

FIGURE 7 - Wall-to-Wall Installation with End Panels (Front View)

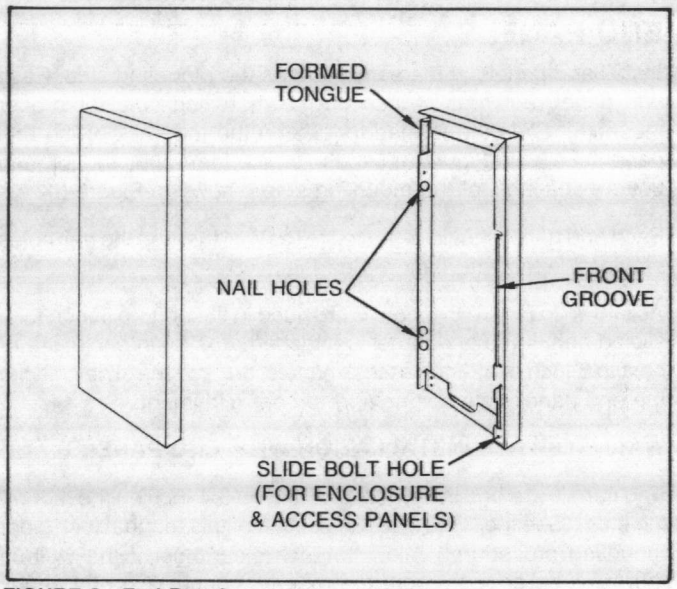

FIGURE 8 - End Panels

BACK PANEL

Install the back panel, if required, by hooking it over the channel at the lower edge of the mounting strip. See Figure 9.

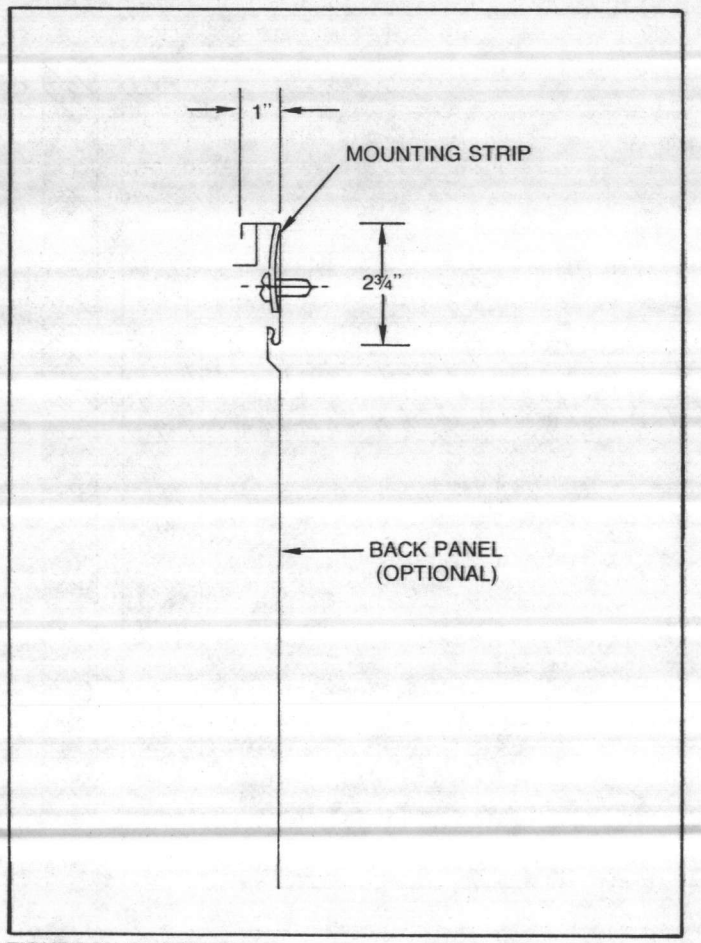

FIGURE 9 - Back Panel

ENCLOSURE BRACKETS

Enclosure brackets are required to mount the element and secure the bottom of the enclosure. Additional element and pipe supports can be installed on the enclosure brackets for supporting a second tier of element and/or supply or return piping.

Install the enclosure brackets by hooking them over the channel at the lower edge of the mounting strip as shown in Figure 10. Two enclosure brackets are provided for each enclosure 2 to 6 feet long, and three enclosure brackets are supplied for 6-1/2 to 8 foot long enclosures.

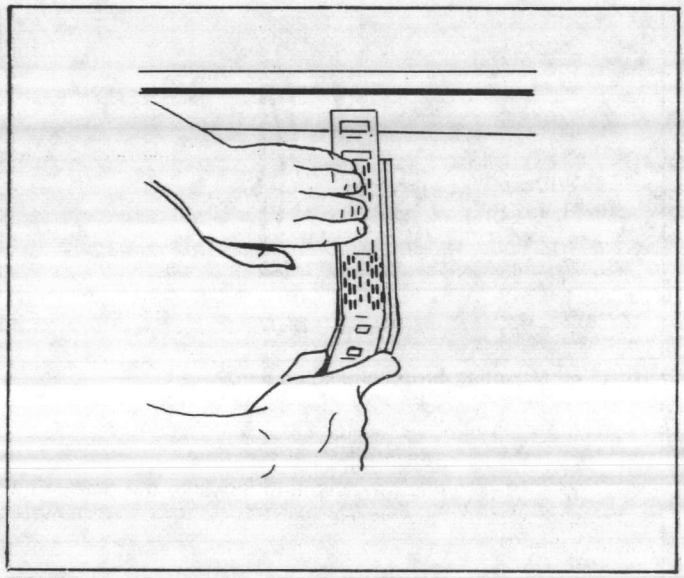

FIGURE 10 - Hanging the Enclosure Bracket

When possible, space the enclosure brackets on stud centers. To ensure that enclosures fit properly, it is suggested that the enclosure brackets be about three inches from the ends of each enclosure panel, with no more than five feet between the enclosure brackets.

If the enclosure brackets are on stud centers, attach them to the wall with 1/4-inch lag bolts or other suitable fasteners (supplied by the installer). Use the mounting hole provided, as shown in Figure 11.

Install element cradles in the nylon guides by sliding them into place. Refer to Figure 12.

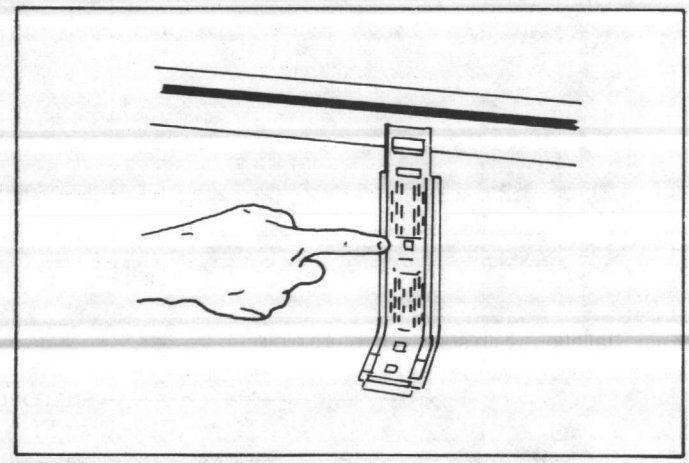

FIGURE 11 - Hole for Fastening Enclosure Bracket to Wall

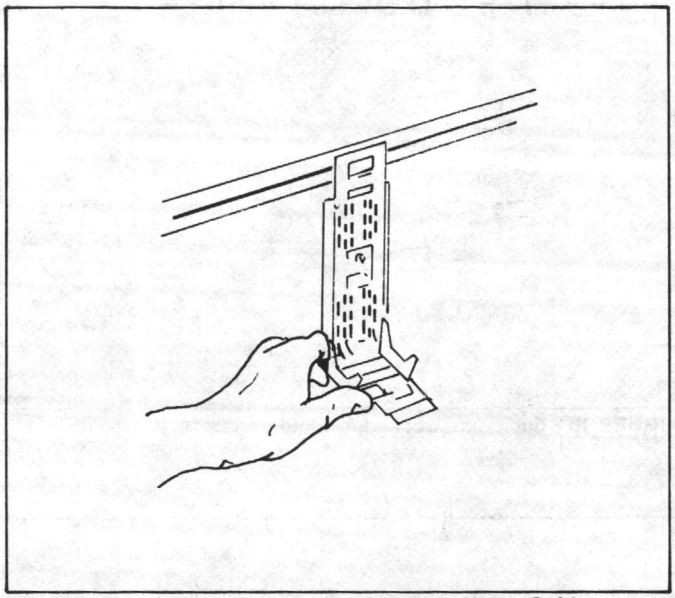

FIGURE 12 - Installing the Element Cradle in Nylon Guides

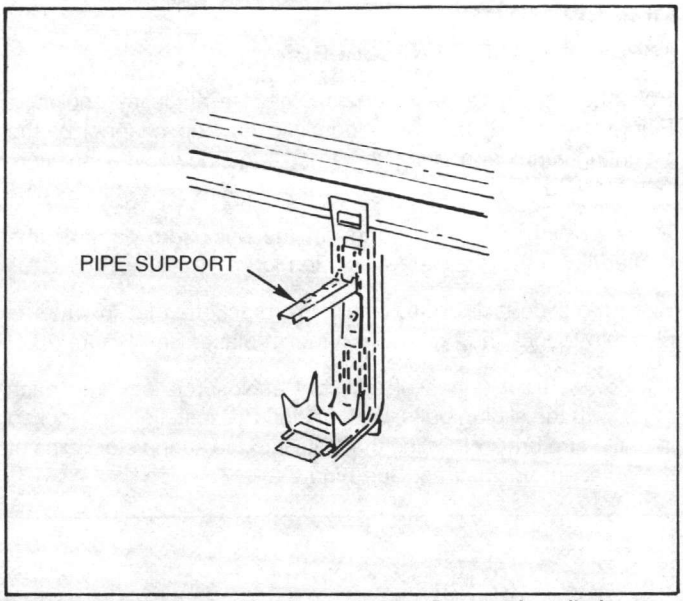

FIGURE 14 - Enclosure Bracket with Pipe Support Installed

ELEMENT AND PIPE SUPPORTS

ELEMENT SUPPORTS

Element supports are used to pitch the heating element on steam installations, or to mount a second tier of element if required. The element supports provided will clip and lock into the graduated slots in the enclosure brackets. Refer to Figure 13. Install element cradles in the nylon guides by sliding them into place.

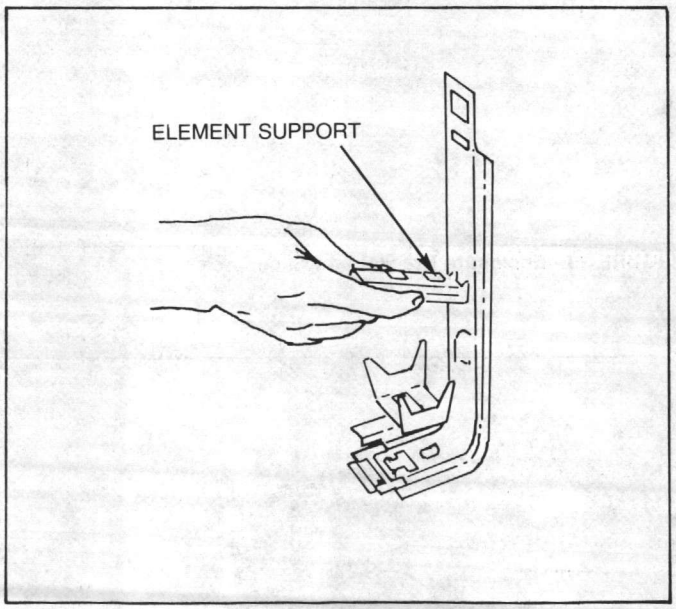

FIGURE 13 - Installing the Element Support

PIPE SUPPORTS

For installations with supply or return piping with one or two pipes, use the pipe supports provided. These pipe supports clip and lock into the graduated slots in the enclosure brackets. See Figure 14. Pipe supports do not have nylon guides and element cradles.

ELEMENTS

Set the element in the cradles with the fin louvers facing downward (aluminum fins only). Refer to Figure 15.

NOTE: *If the elements include dampers, the elements should be level front-to-back to avoid damper hang-up during operation.*

On one row installations, the element should be mounted at the bottom of the enclosure on the enclosure bracket to obtain catalog capacity ratings.

Complete the installation of all elements and make the required piping connections. Nonferrous elements have one tube end belled for ease of sweat connection to the adjacent element. Steel element tube ends may be chamfered or threaded, as ordered, for welded or screwed connections.

With the elements in place, install the enclosures, enclosure extensions, access panels or access extensions. If the installation includes dampers, refer to the "Dampers" section of this manual before attaching the enclosures.

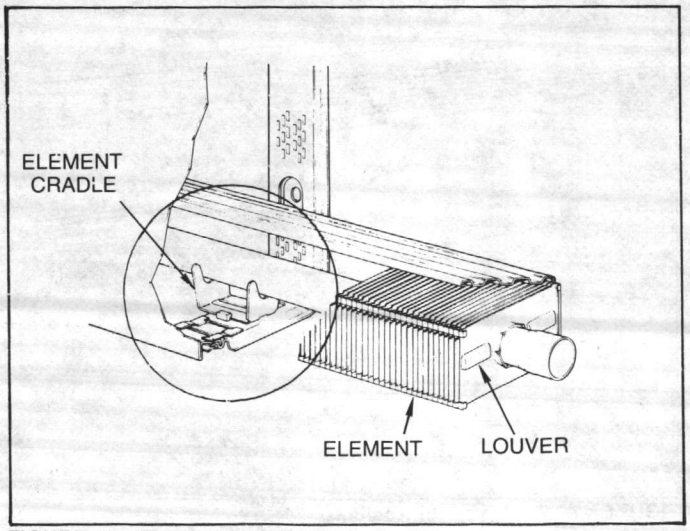

FIGURE 15 - Element and Cradle in Position

ENCLOSURES

TYPES S, F, AND T ENCLOSURES

Hold the enclosure panel at a 45 degree angle as shown in Figure 16. Insert the back edge into the top channel of the mounting strip, and bring the front edge down into position. See Figures 17 and 18.

Place the formed bottom edge of the enclosure panel in the formed lip of the bracket (shown in Figure 19).

Bring the slide lock on the enclosure bracket as far forward as possible to lock the enclosure panel in place. See Figure 20.

The lower, front edges of adjacent enclosures lock into each other with the sliding bolts. With enclosures installed and locked in enclosure brackets, slide the bolts into the spring steel clips of the adjacent enclosures. See Figure 21.

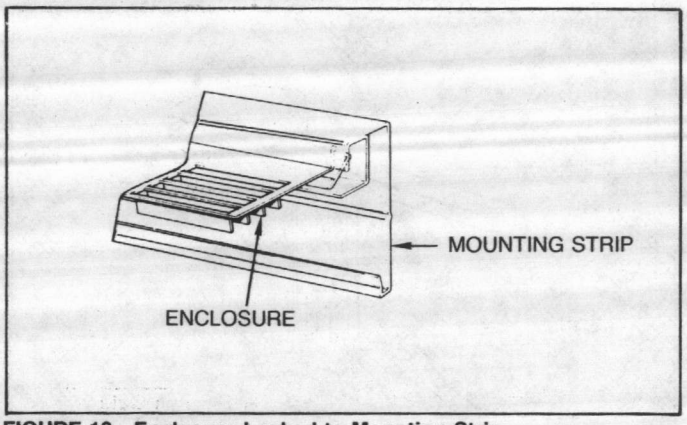

FIGURE 18 - Enclosure Locked to Mounting Strip

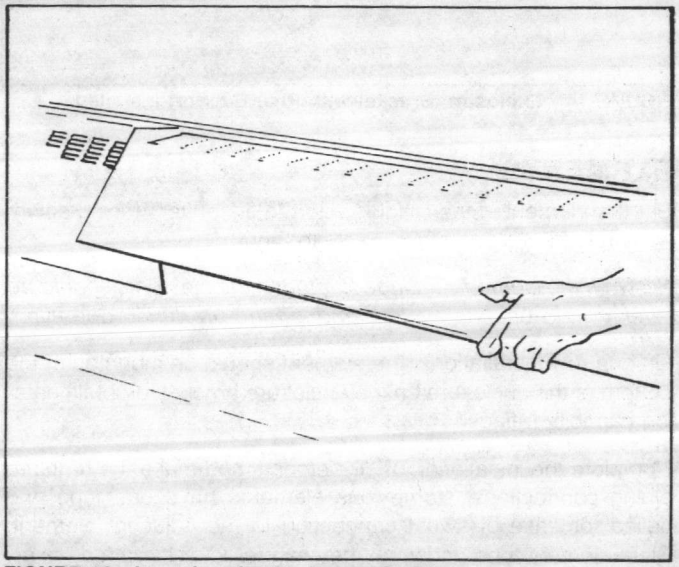

FIGURE 16 - Inserting the Enclosure Panel

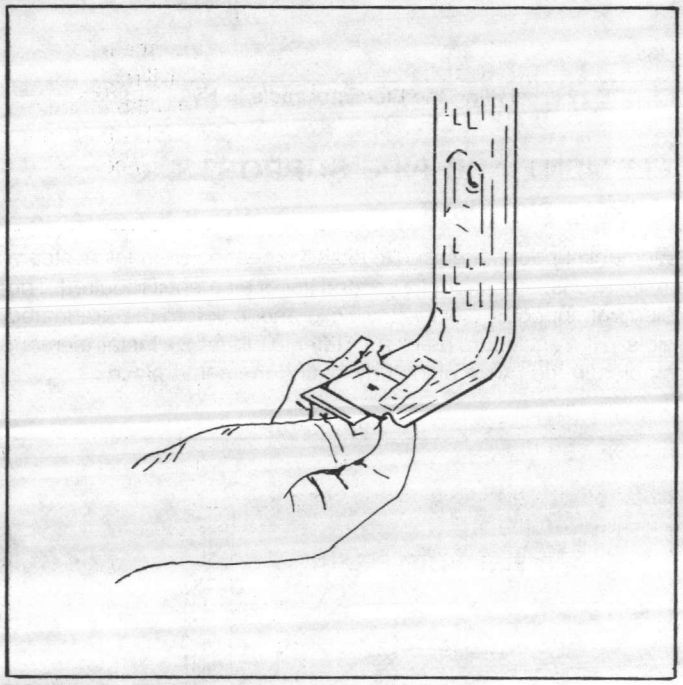

FIGURE 19 - Enclosure Bracket and Slide Lock

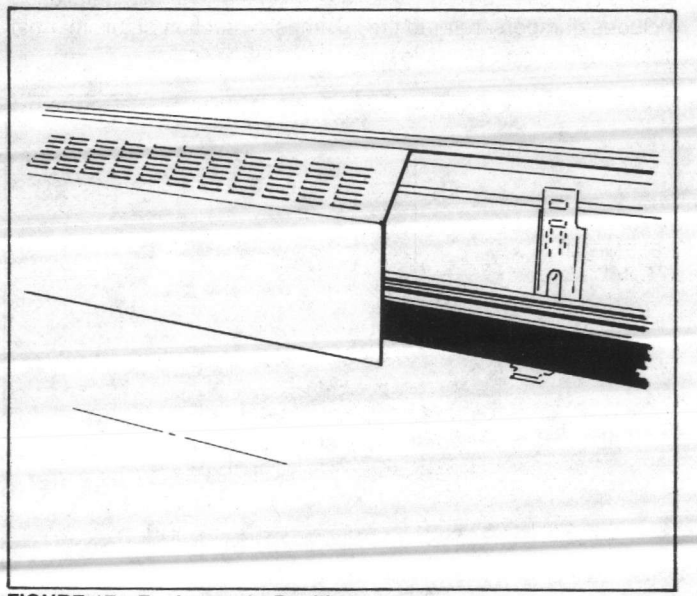

FIGURE 17 - Enclosure in Position

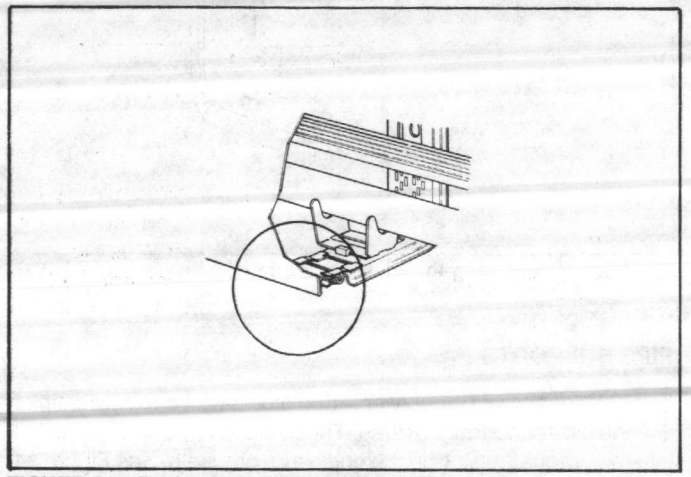

FIGURE 20 - Enclosure Locked to Bracket

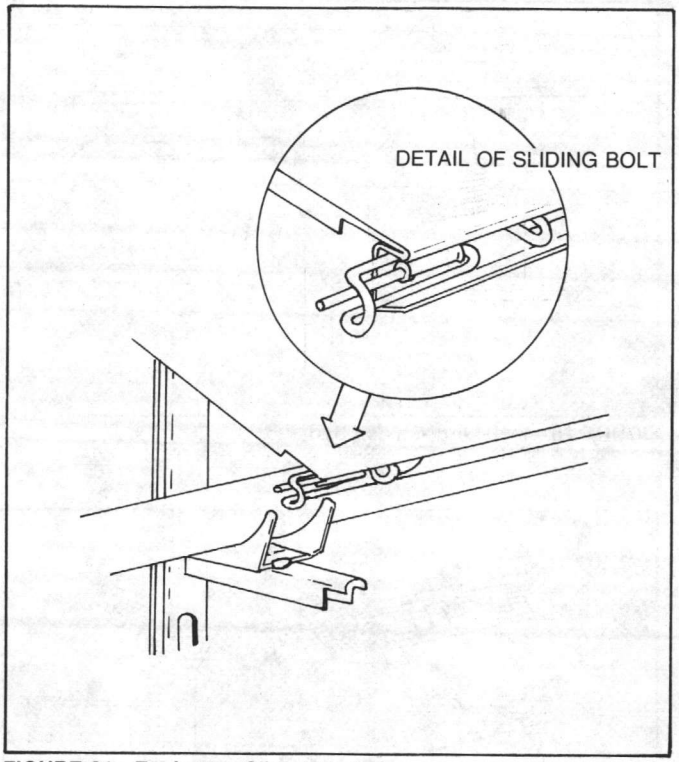

FIGURE 21 - Enclosure Sliding Bolt

TYPE TA ENCLOSURES

Type TA enclosures consist of an extruded aluminum grille and a separate front panel. In addition to the enclosure bracket, a rod loop is used to support the grille and front panel at the upper, front edge. See Figure 22.

Remove the enclosure bracket and insert the rod loop in the hole provided at the top of the bracket. Reinstall the bracket on the mounting strip as shown in Figure 23.

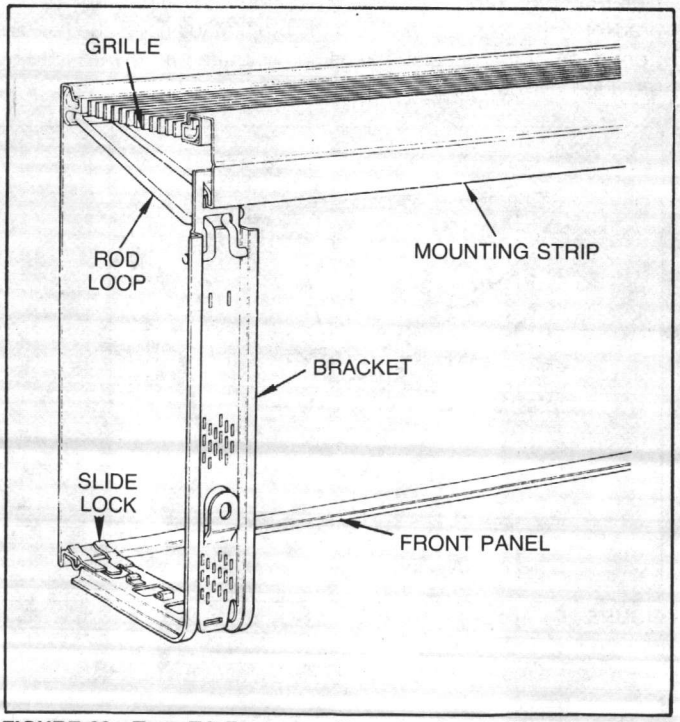

FIGURE 22 - Type TA Enclosure Mounting Detail (View from Rear)

Hold the grille in an upward position, 45 degrees from vertical, and insert the back edge of the grille into the top channel of the mounting strip. Bring the front edge of the grille downward and engage the rod loop. The front edge of the grille is formed to accept the rod loop.

If the installation includes dampers, attach the damper control mechanism at this time (see the "Dampers" section of this manual).

Insert the formed top edge of the front panel into the channel provided at the top, front edge of the grille. See Figure 24.

Bring the lower edge of the front panel down against the enclosure bracket and place the formed panel edge over the top of the bracket. Slide the slide lock as far forward as possible to lock the panel to the enclosure bracket.

Lock adjacent enclosures to each other with the sliding bolts as described for Type S, F, and T enclosures. Refer to Figure 21.

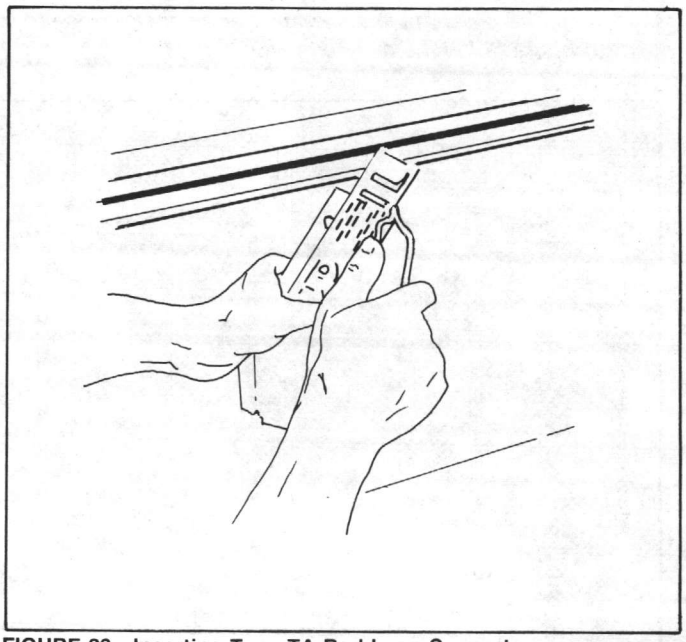

FIGURE 23 - Inserting Type TA Rod Loop Support

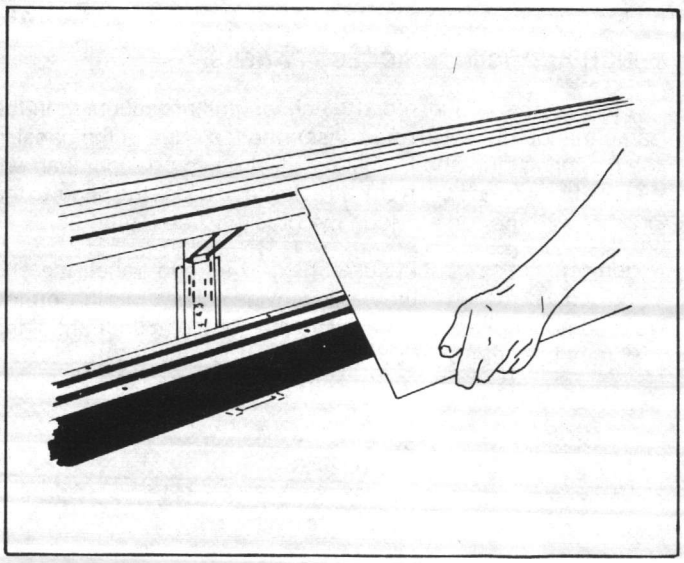

FIGURE 24 - Attaching Type TA Front Panel to the Grille

ACCESSORIES

ENCLOSURE EXTENSIONS

Enclosure extensions, shown in Figure 25, are designed to provide additional length to standard enclosures on wall-to-wall installations or when additional length is required to fully cover elements and piping.

The enclosure extension should lay over the top of the installed enclosure, with the flanged end positioned to butt up to the next enclosure, end cap, or corner piece.

Allow one inch overlap for a satisfactory joint. Remove the enclosure, place the enclosure extension over the edge of the enclosure, and snap the lower edge of the extension over the lower edge of the enclosure to form an assembly. Hold the assembly at an angle, insert it in the mounting strip, and bring the lower, front edge down into position. Lock the enclosure to the enclosure brackets (see Figure 20).

NOTE: *On Type TA enclosures the enclosure extension is to be inserted in the grille (in the same manner as enclosures are inserted) instead of in the mounting strip.*

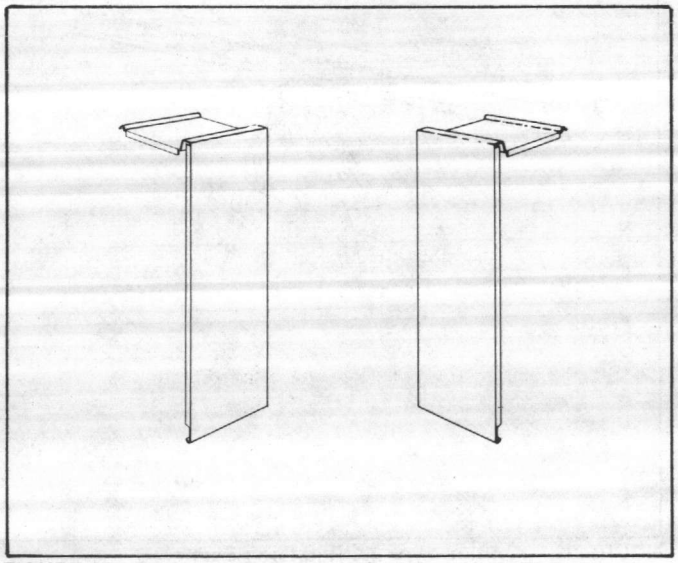

FIGURE 25 - Enclosure Extensions (Left-hand and Right-hand)

6-INCH AND 12-INCH ACCESS PANELS

Access panels in 6-inch or 12-inch lengths are mounted in the same manner as enclosures. Insert the top edge of the panel in the mounting strip and bring it downward into position. If an enclosure bracket has been placed at this point, lock the panel to the bracket with the slide lock on the bracket. See Figure 26.

When an access panel is used next to an end panel, the end panel must be nailed to the wall to provide rigidity. Slip the formed front edge of the access panel into the groove at the front of the end panel (Figure 8) or the corner piece (Figure 27).

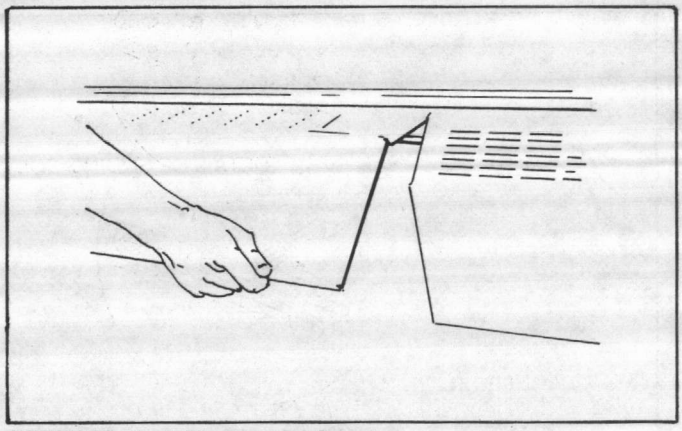

FIGURE 26 - Installing Access Panel

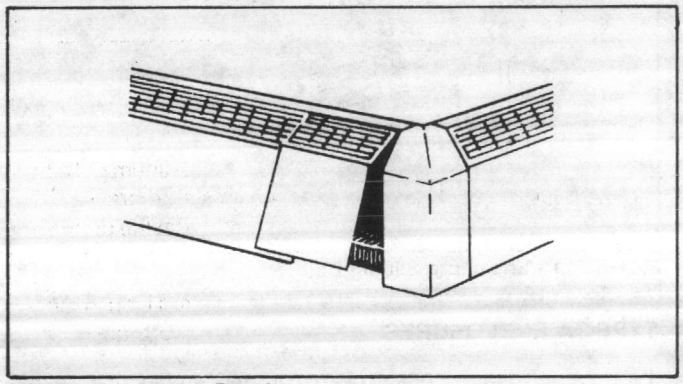

FIGURE 27 - Access Panel

ACCESS EXTENSIONS

The 12-inch access extension with a 4 x 6 inch access door is shown in Figure 28. A front support bracket is provided for mounting purposes when the extension is next to an adjacent wall.

Determine the proper mounting position and attach the support bracket to the adjacent wall. Set the bracket to accept the flanged front edge of the access extension. Mounting hardware is to be provided by the installer.

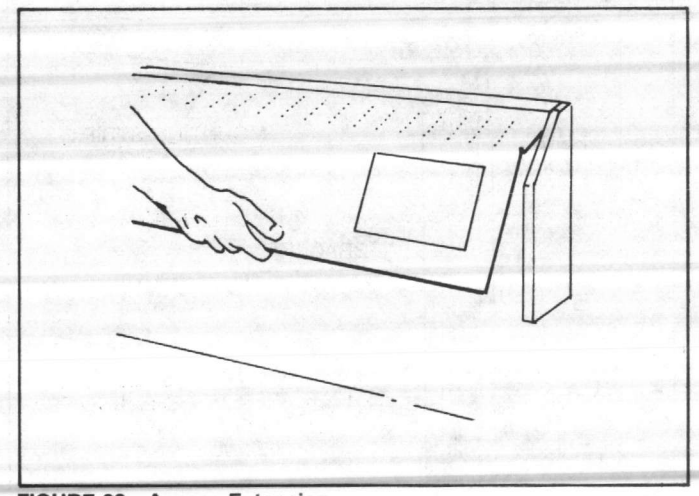

FIGURE 28 - Access Extension

Remove the adjacent enclosure and lay the extension over the edge of the enclosure. Snap the lower edge of the extension over the lower edge of the enclosure. Hold the access extension and enclosure assembly in an upward position 45 degrees from vertical and insert the formed top edge of the extension into the top channel of the mounting strip.

Allow at least one inch overlap on the adjoining enclosure to provide a satisfactory joint. The flanged front edge of the extension, however, must fit in the support bracket or an adjacent wall-fin end panel, inside corner, or outside corner.

Bring the lower front edge of the extension down into position and snap the formed lower edge over the bottom, front edge of the adjoining enclosure. See Figure 29.

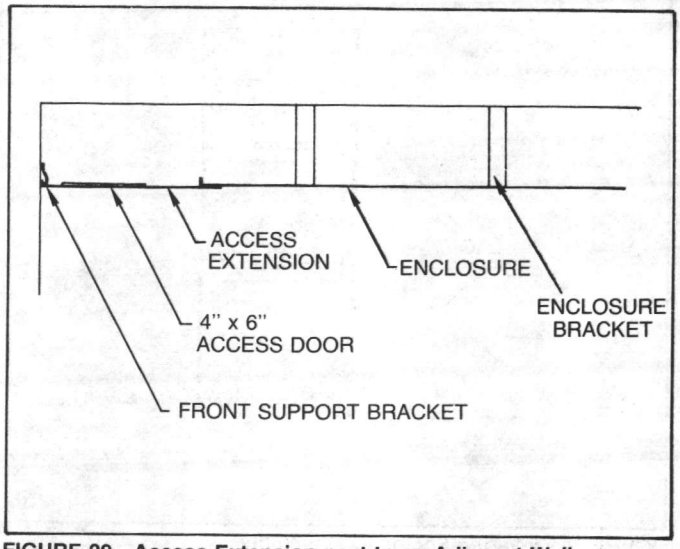

FIGURE 29 - Access Extension next to an Adjacent Wall

OUTSIDE AND INSIDE CORNERS

When an outside or inside corner is to be used, the mounting strip on both sides should be brought to within 1/2-inch of the corner. Place locking clamps (two provided with each corner piece) on both mounting strips at the corner. Set the corner piece on the mounting strip with the slots of the corner piece fitting into the mounting strip.

Slide the two locking clamps along the mounting strip until they are tight against the flange of the corner piece. Tighten the thumbscrews. Refer to Figures 30, 31, and 32.

Insert the formed flange on the edge of each adjacent enclosure into the grooves at either side of the corner piece. Install sliding bolts in the front, bottom edge of the adjacent enclosures and engage the bolt holes provided in the corner piece.

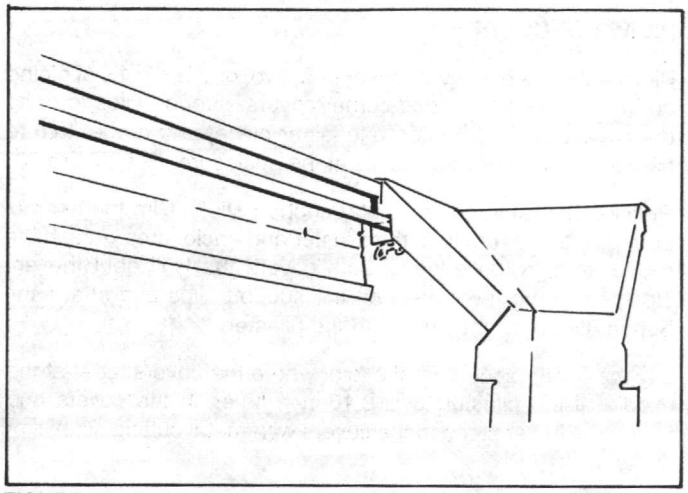

FIGURE 30 - Inside Corner, Mounting Strip, and Locking Clamp (Front View)

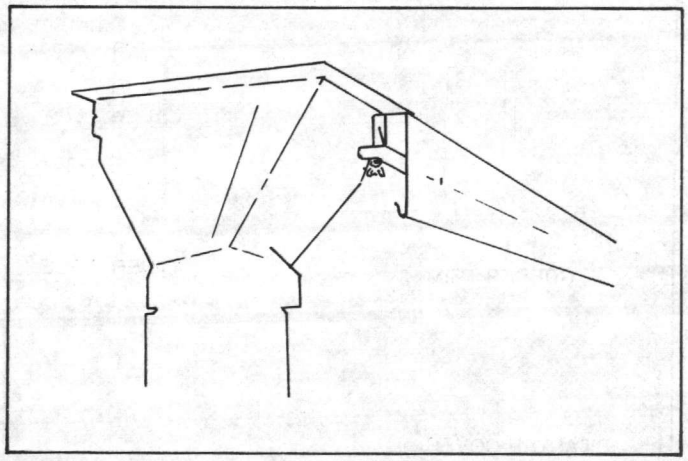

FIGURE 31 - Locking Clamp in Position (Rear View)

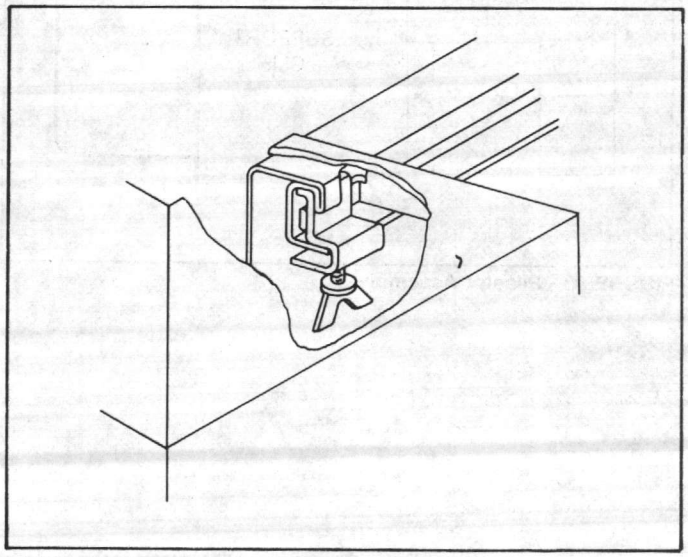

FIGURE 32 - Locking Clamp and Outside Corner

PILASTER COVERS

Pilaster covers effectively cover one, two, or three rows of piping and include two L-shaped corner covers, support clips to hang the covers on the pilaster, one joiner piece, and rubber trim to gasket the pilaster cover joints at the enclosure. See Figure 33.

Position and mount the pilaster support clips. Trim the ends of both pilaster covers to fit the pilaster and enclosures. Attach the rubber trim to the edge of both covers that will abut the enclosures. Hang the covers on the support clips and attach the bottom flange of the covers to the pilaster.

Lay the joiner piece over the joint where the covers meet at the middle of the pilaster. Drill 3/16-inch holes in the covers and fasten the joiner piece to the covers with metal cutting screws or rivets.

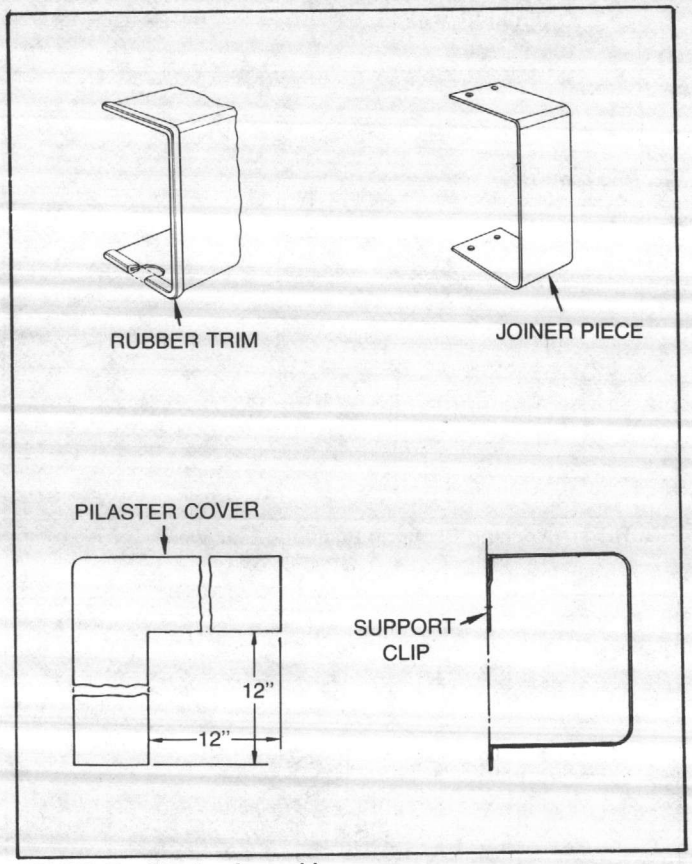

FIGURE 33 - Pilaster Assembly

INVERTED ENCLOSURES

Inverted enclosures are installed in a manner similar to the upright enclosures, except that the bottom of the inverted mounting strip is aligned to the chalk line. Since the inverted enclosure brackets cannot hang from the mounting strip, fasten them to the wall with lag bolts.

Tamper-proof fasteners are provided to secure and lock enclosures to the enclosure brackets. Use element supports to mount the element cradles and elements as shown in Figure 34.

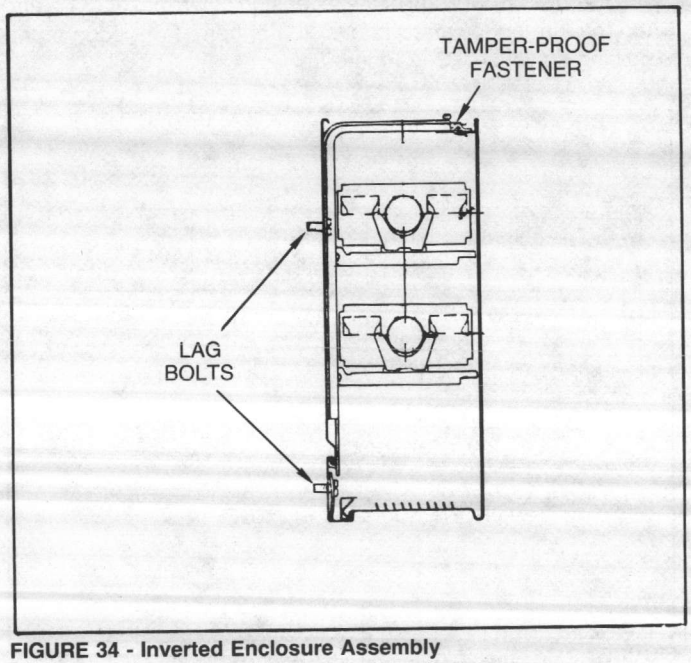

FIGURE 34 - Inverted Enclosure Assembly

TAMPER-PROOF FASTENERS

Tamper-proof fasteners are supplied to fasten the enclosures to the enclosure brackets for tamper-proof and inverted enclosure installations. Slide the lock forward as far as possible and tighten the socket head screw. See Figure 35.

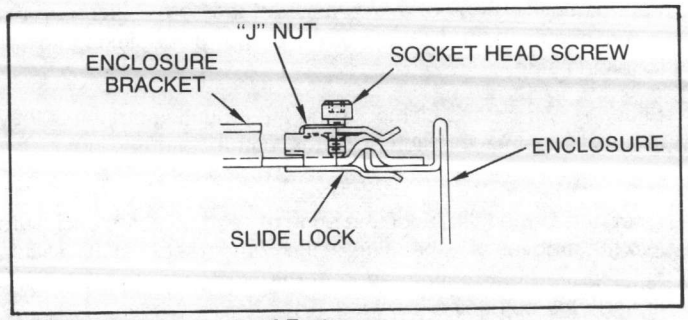

FIGURE 35 - Tamper-proof Fastener

FRONT AND BOTTOM INLET GRILLES

FRONT INLET GRILLES

Figures 36 and 37 illustrate two suggested methods of installing enclosures with front inlet grilles.

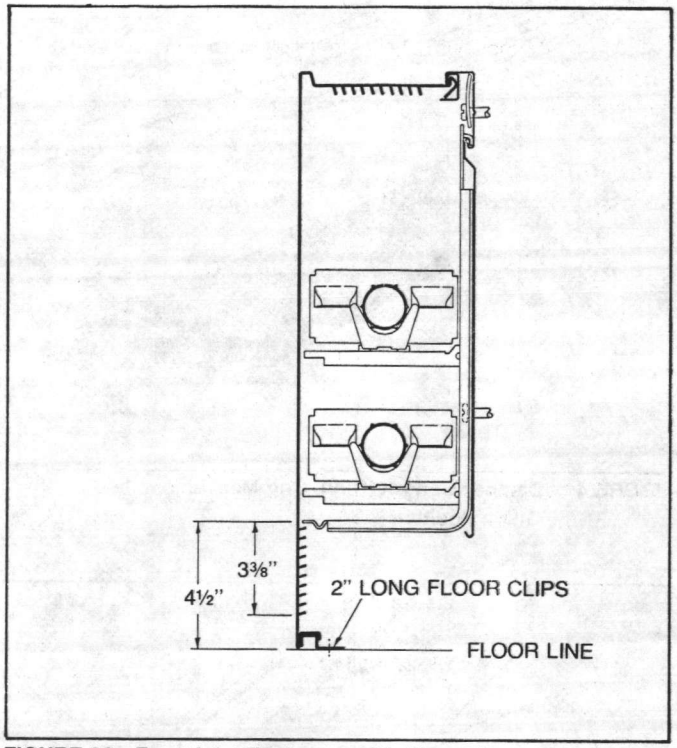

FIGURE 36 - Front Inlet Enclosure with Floor Clips

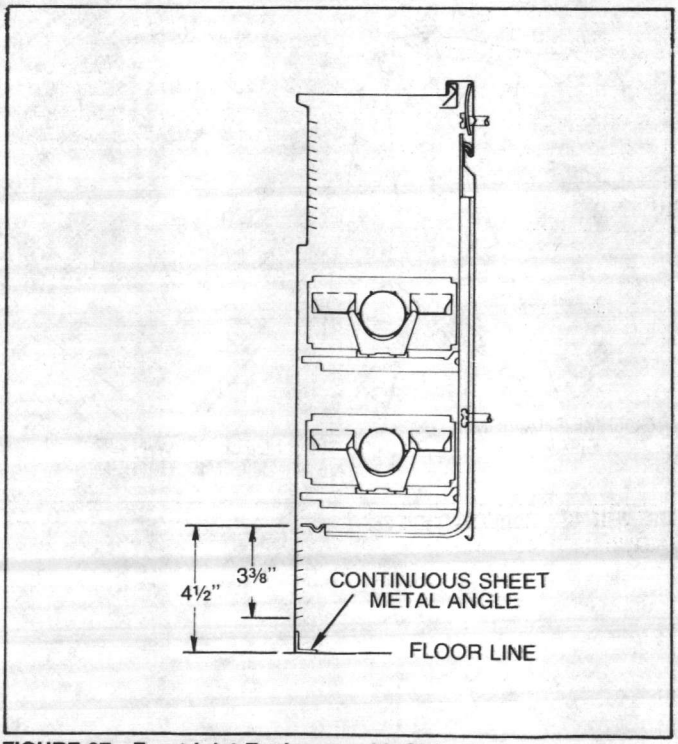

FIGURE 37 - Front Inlet Enclosure with Sheet Metal Angle

In the first method, two inch long metal clips are attached to the floor, and the enclosure formed edge slips over the clips. In the second method, a continuous sheet metal angle is used at the floor line and the enclosure is attached to the angle with sheet metal screws.

BOTTOM INLET GRILLES

Bottom inlet grilles are separate pieces that attach to the wall and the enclosure bracket. As shown in Figure 38, the "J" Nut (A) is factory installed and contains threads for the screw (B). To install, attach the front edge of the grille to the bracket with the bolts and washers provided and secure the back of the grille to the wall.

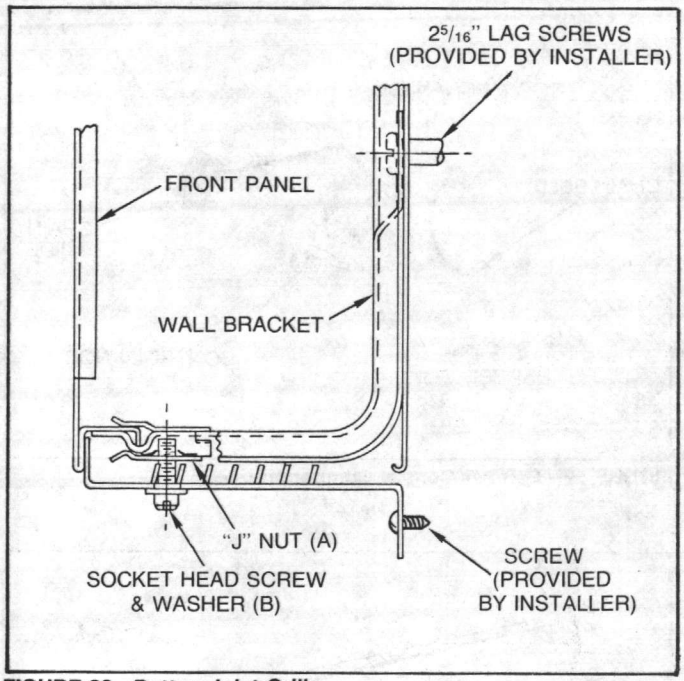

FIGURE 38 - Bottom Inlet Grille

DAMPERS

Dampers are shipped attached to the elements, except for the 3/4-inch Copper/Aluminum Series 60 element. The damper for a 3/4-inch element must be field installed. (See Figures 54 and 55 for installing the field mounted damper.) The damper control assembly is shipped separately in a cloth bag. Refer to Figure 39.

DAMPER INSTALLATION WITH TYPE S, F, AND T ENCLOSURES

Place the enclosure ahead of and below the element, as shown in Figure 40.

NOTE: *Before installing the damper control knob cog mechanism on the enclosure, make sure there will be 24 inches between the cog mechanism and the chain guide, which is secured to the mounting strip. (See Figure 41.) This distance is necessary to provide a proper angle for the chain for damper operation.*

Set the metal retainer of the cog mechanism so that it will not obstruct the four slots, two at the top and two at the bottom of the plastic part. Be sure the enclosure is face downward with the top toward the installer. Position the cog mechanism so that the shaft is pointed toward the grille. See Figure 42.

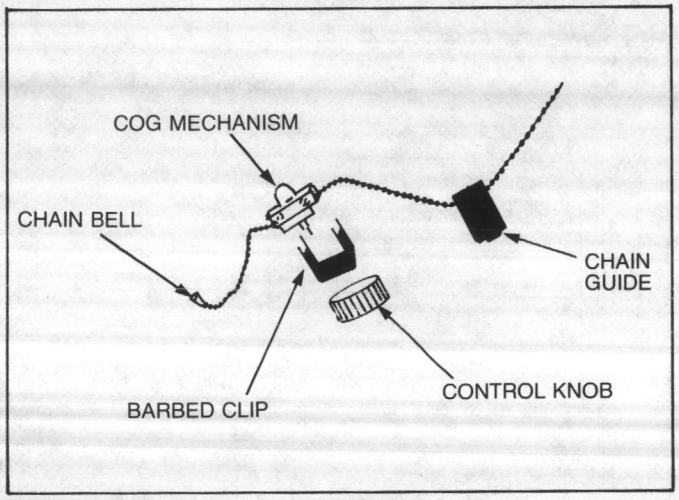

FIGURE 39 - Damper Control Components

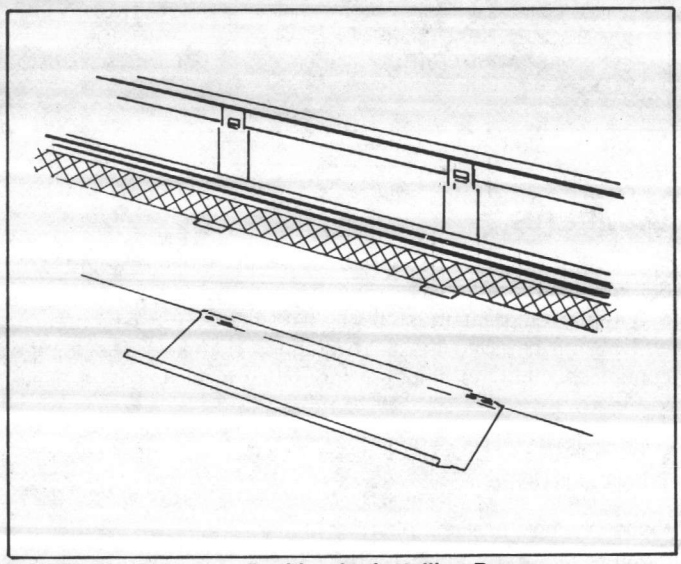

FIGURE 40 - Enclosure Position for Installing Damper

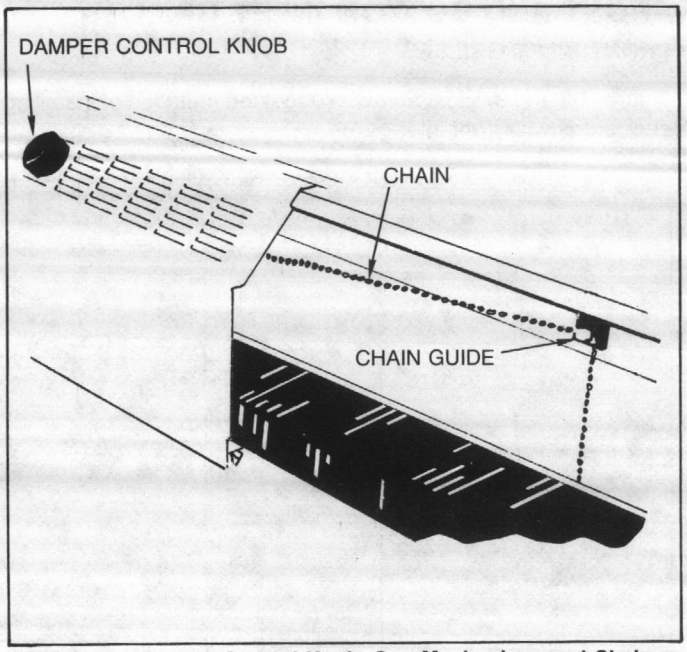

FIGURE 41 - Damper Control Knob, Cog Mechanism, and Chain Guide Position

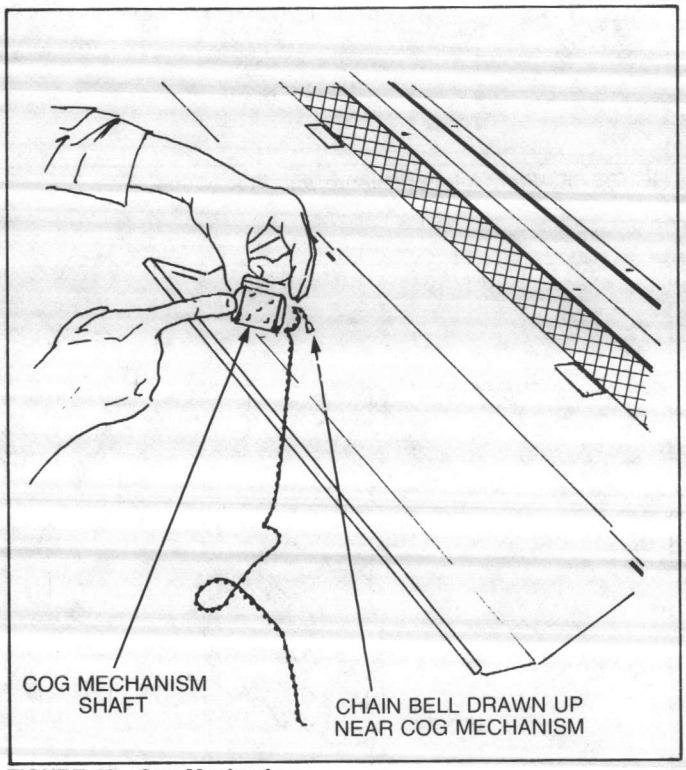

FIGURE 42 - Cog Mechanism

With the shaft of the cog mechanism pointed toward the enclosure grille, insert the shaft between the center segments of the grille. See Figure 43.

Hold the cog mechanism in place and insert the barbed clip through the grille from the outside of the enclosure. Place it over the shaft and into the four slots of the plastic part. The barbed clip usually slips into the slots easily, locking the cog mechanism into position. On the stamped grille, the second set of barbs from the end should be engaged. See Figure 44.

If the barbed clip will not slip into place easily, spring it open slightly. If difficulty is still encountered, insert the barbed clip through the grille and guide the slots of the cog mechanism over the prongs of the clip. See Figure 45.

Figure 46 shows the cog mechanism and barbed clip properly mounted on the enclosure grille.

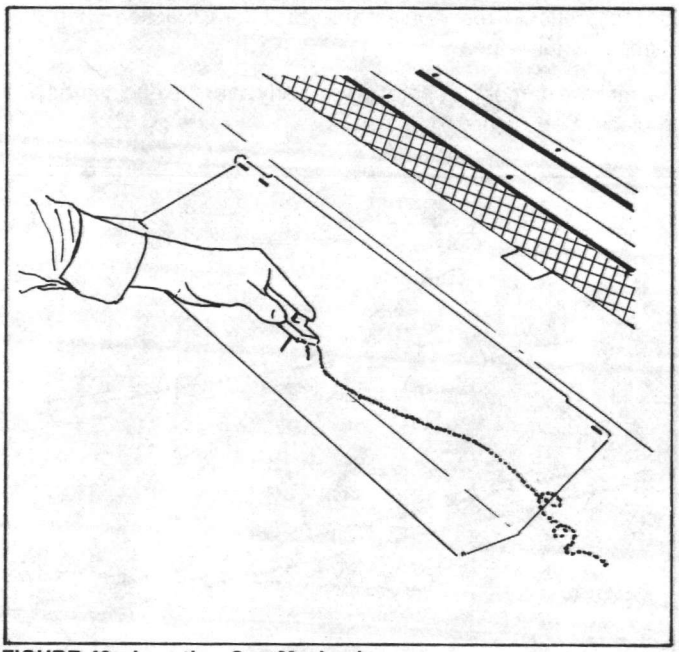

FIGURE 43 - Inserting Cog Mechanism

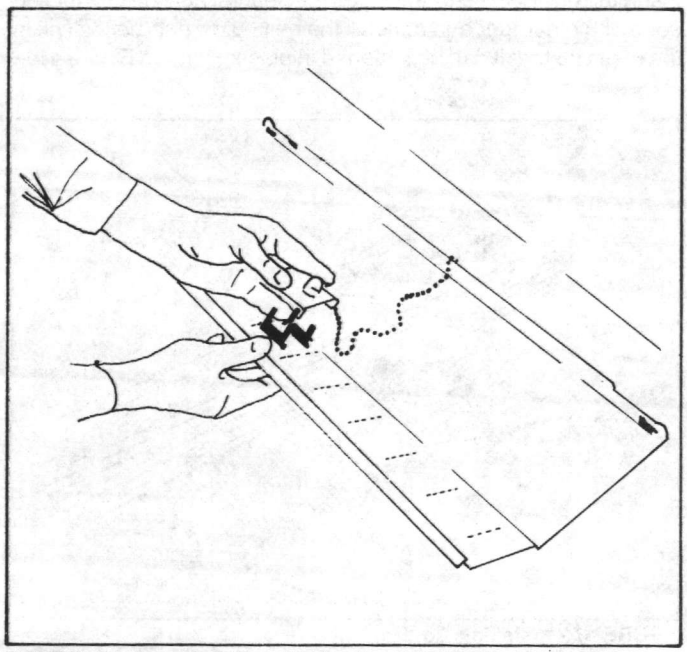

FIGURE 45 - Inserting Cog Mechanism into Barbed Clip

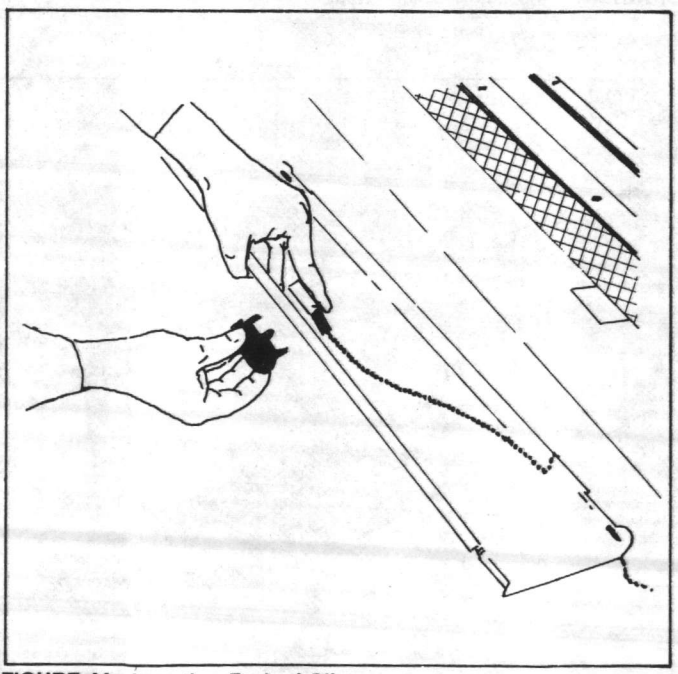

FIGURE 44 - Inserting Barbed Clip

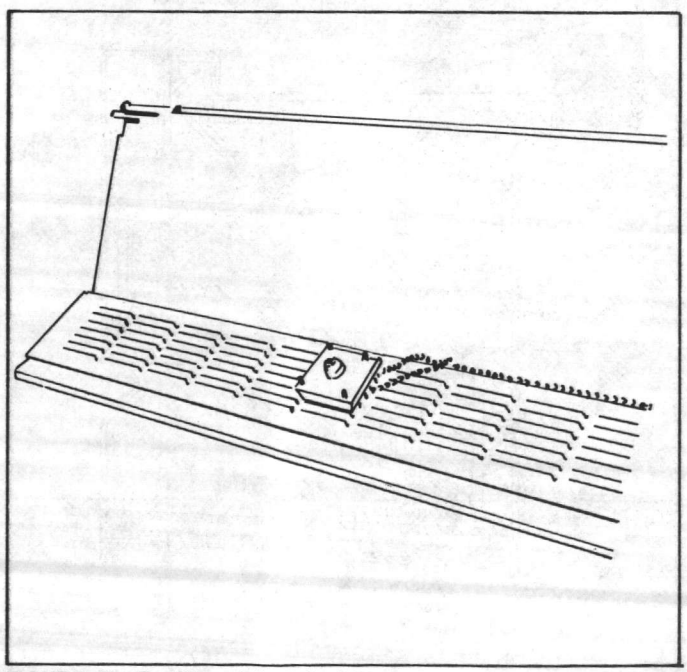

FIGURE 46 - Position of Installed Control

Install the control knob on the shaft now projecting through the grille, as shown in Figure 47. Tighten the set screw to secure the control knob to the shaft.

Extend the chain, without crossing the cog mechanism, either to the right or left for at least two feet. Be sure the chain guide is correctly placed on the chain. It may be necessary to remove the bell, slip the chain guide off, reverse it, return it to the chain, and refasten the bell. Remove the bell from the long end of the chain. Insert the end of the chain through the nearest hole on the outside edge of the damper and reinstall the bell. Allow sufficient slack in the chain so that it can be fastened in place. Refer to Figure 48.

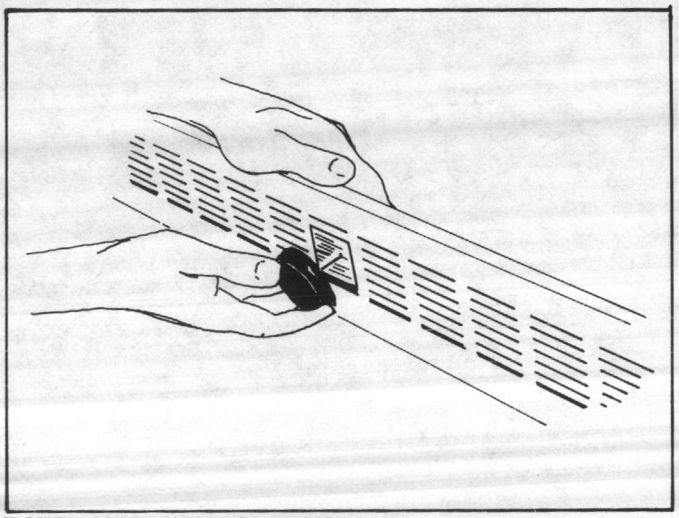

FIGURE 47 - Installing Control Knob

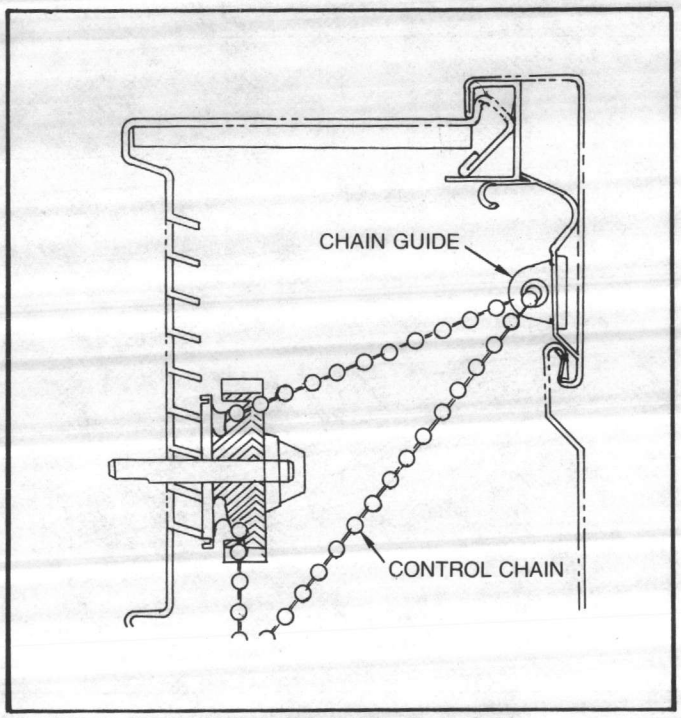

FIGURE 48 - Control Chain Inserted in Chain Guide

Position the chain guide with the plastic guide down and outward, and snap it into place on the mounting strip. See Figure 49.

The chain guide should be located between the cog mechanism and the point where the chain is attached to the damper. **The location must be no more than two inches from the point where the chain is attached to the damper.** See Figure 50.

Place the damper stop clip over the front edge of the damper, exactly in front of one of the enclosure brackets. In operation, the stop clip should rest against the enclosure bracket when the damper is fully open.

Be sure the damper is operating properly after the enclosures are in place. See Figure 51.

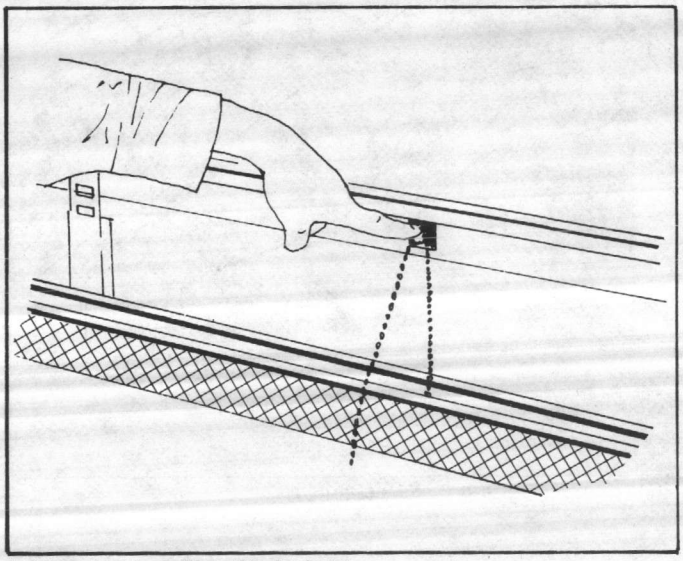

FIGURE 49 - Installing Chain Guide

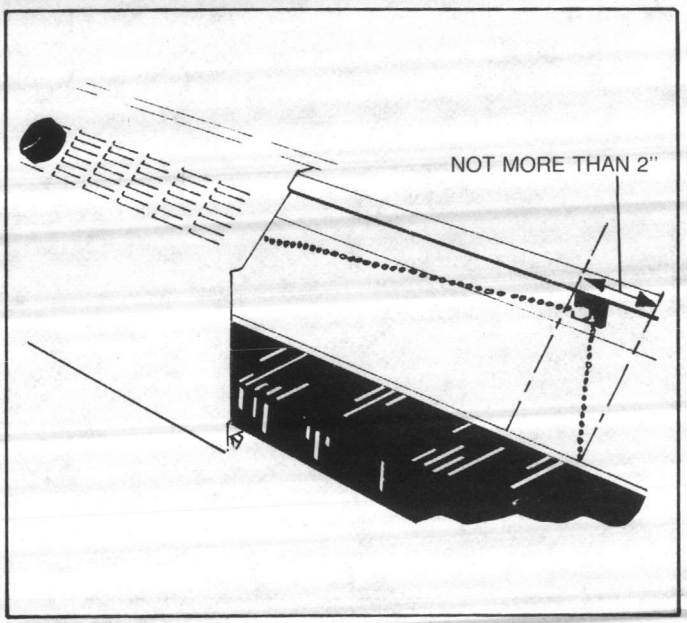

FIGURE 50 - Chain Guide Position

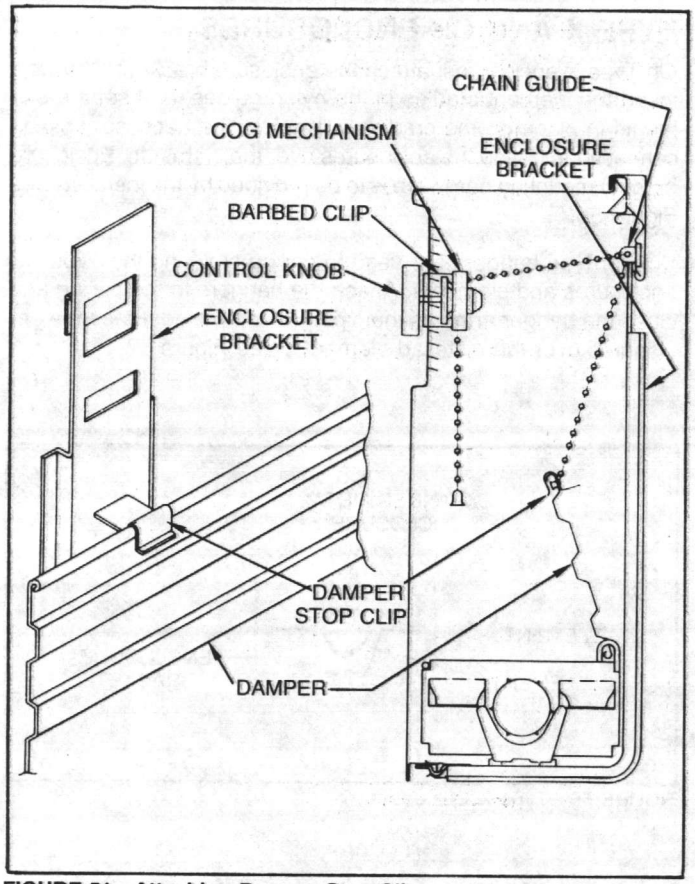

FIGURE 51 - Attaching Damper Stop Clip

DAMPER INSTALLATION WITH TYPE TA ENCLOSURES

For Type TA enclosures, install the damper control mechanism as described for Type S, F, and T enclosures, except with the extruded aluminum grille in place on the mounting strip. Only the first set of barbs on the barbed clip should be engaged in the cog mechanism. See Figure 52.

Position the chain guide with the plastic guide down and outward, and snap it into place on the mounting strip. The chain guide should be located between the cog mechanism and the point where the chain is attached to the damper. The location must be no more than two inches from the point where the chain is attached to the damper. See Figure 53.

FIELD-MOUNTED DAMPERS

To field install the damper blade, a simple utility hook with a threaded end will be needed. The utility hook is to be furnished by the installing contractor.

First install the mounting strip, the enclosure brackets, and the heating element according to the instructions in this manual.

The damper blade is furnished with pre-punched holes. Lay the damper blade on top of the heating element. Drill a small hole in the wall, in the same location as each damper blade hole, for the installation of the utility hooks. Remove the damper from the top of the heating element. Install the utility hooks just above the heating element. Make sure the open ends of the utility hooks are in the upright position. Position the damper blade on each utility hook and close the open end of the hook to keep the damper blade secure when it is in operation. See Figures 54 and 55.

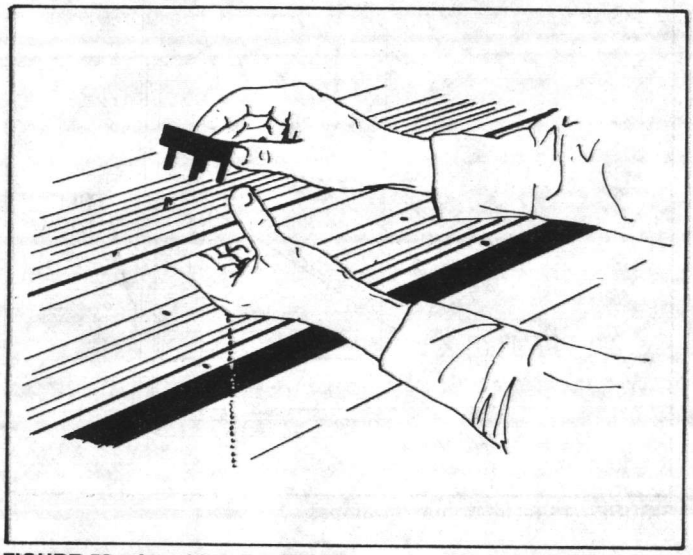

FIGURE 52 - Attaching Barbed Clip (Type TA Enclosures)

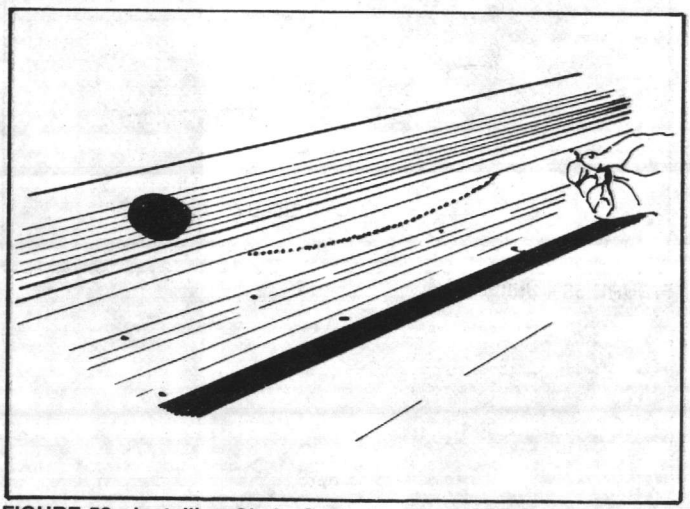

FIGURE 53 - Installing Chain Guide (Type TA Enclosures)

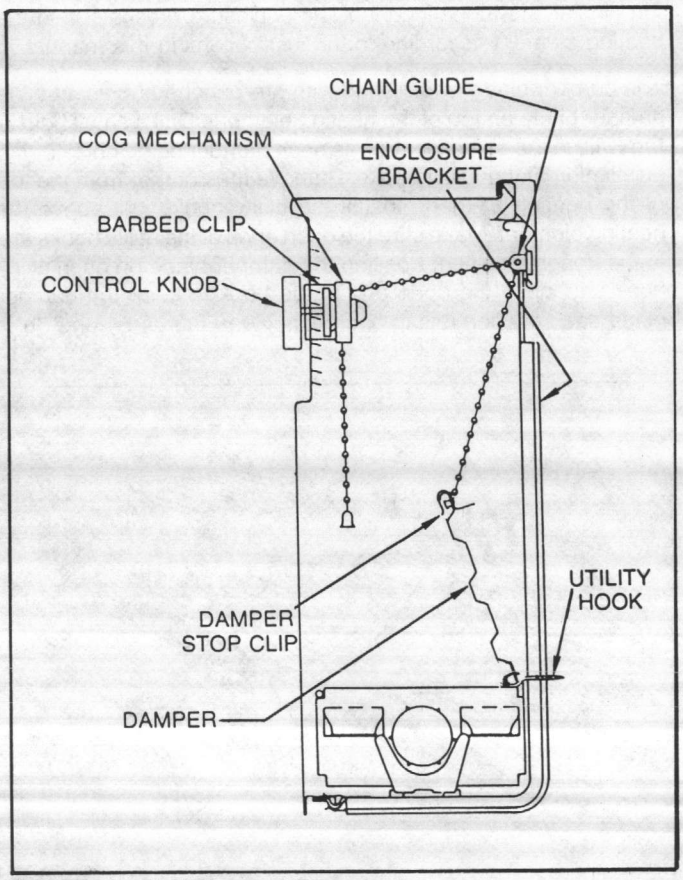

FIGURE 54 - Field-Mounted Damper

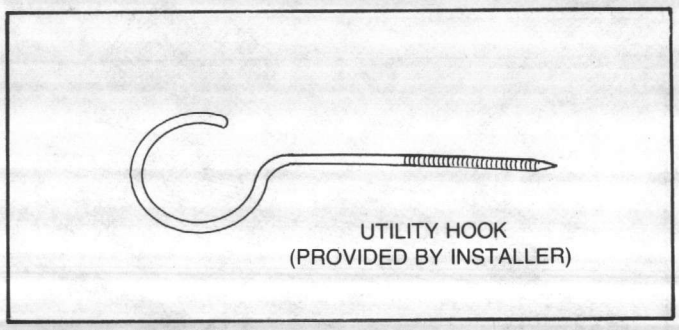

FIGURE 55 - Utility Hook

TYPE X AND CS ENCLOSURES

On Type X enclosures, attach the enclosure bracket to the wall, insert the element cradles in the nylon guides, and set the elements in place on the cradles. Complete the necessary piping connections. Place the enclosures over the elements. Enclosure bracket mounting hardware is to be provided by the installer. See Figure 56.

Scissor-type hangers are used to ceiling suspend the Type CS enclosures and elements. Attach the hangers to the ceiling and close the hanger arms as the piping is completed. Place the enclosures over the installed elements. See Figure 57.

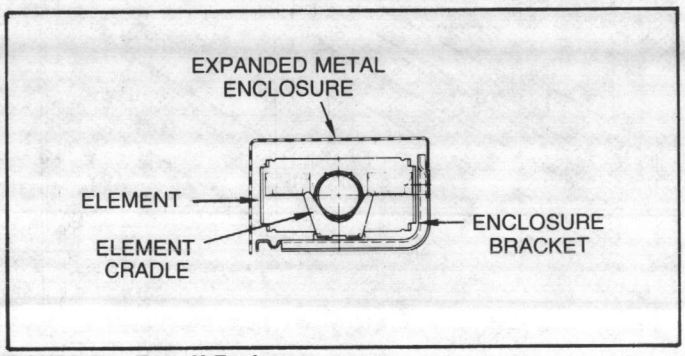

FIGURE 56 - Type X Enclosure

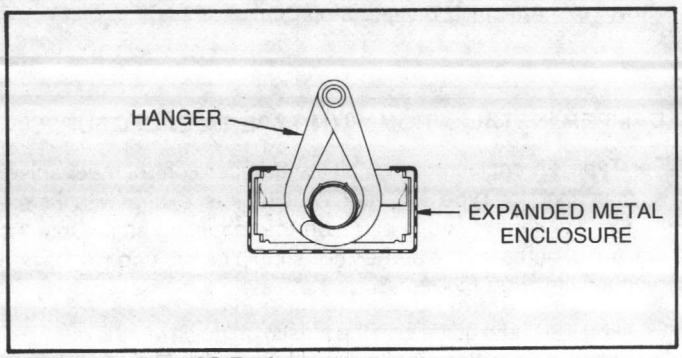

FIGURE 57 - Type CS Enclosure

FIELD PAINTING

Special surface preparation may be required when field painting the unit. The surface should be free of oil, grease, and dirt and should be scuff sanded prior to painting. This surface preparation is sufficient when alkyd enamels are used.

If Latex paints are used, an intermediate alkyd primer must be applied after proper surface preparation to improve adhesion. In lieu of the intermediate alkyd primer coat, such surface preparation methods as liquid sandpaper or hand sanding will provide good adhesion in some cases. However, this is true only when a high grade Latex paint is used.

TAB PLACEMENT HERE

DESCRIPTION:

None

☑ **Tab page did not contain hand written information**

☐ **Tab page contained hand written information**
***Scanned as next image**

Confidential Records Management, Inc.
New Bern, NC
1-888-622-4425
9/08

Taco **Instruction Sheet**

102-052

Horizontal Circulators Nos. 110 thru 120

Plant I.D. No. 001-318

APPLICATION:

1. Maximum recommended working pressure is 125 psi (862 K Pa).
2. Maximum water temperature must not exceed 240°F.
3. Cast Iron Circulators should be used for closed systems only.
4. Bronze circulators must be used in open or fresh water systems and potable water systems.

INSTALLATION:

1. Mounting position — Circulators must be mounted with motor in a horizontal position.
2. Rotating casing — Casing has an arrow on front which indicates direction of flow. To rotate casing remove the casing bolts, rotate casing and replace bolts. Make sure gasket is properly located before tightening bolts.
3. Electrical connections — Observe all applicable codes when connecting to power supply. The motors do not require overload protection.
4. Fill system — It is good practice to flush a new system of foreign matter before starting circulator.

TO REPLACE MOTORS:

1. Disconnect wiring.
2. Loosen the two set screws at pump end of spring coupling, remove bolts between bracket and motor and separate.
3. Loosen other set screw of coupling and remove coupling from old motor.
4. Slide coupler with single set screw over new motor shaft and tighten against flat surface of shaft.
5. Place new motor assembly into bracket and replace bolts.
6. Extend pump end of spring coupling over impeller shaft 3/16" and tighten both set screws. If impeller and shaft move into body during this operation, water will flow from weep hole in bracket. If this does occur, extend spring coupler a little more or until water stops flowing. CAUTION: UNDER NO CIRCUMSTANCES SHOULD THE WEEP HOLE BE PLUGGED.
7. Rewire motor.

TO REPLACE SPRING COUPLING

Follow same procedure outline above.

LUBRICATING INSTRUCTIONS

Re-oil pump and motor annually with SAE No. 30 oil.

*CAUTION: The addition of certain chemical additives to systems utilizing TACO Equipment, voids the warranty.

COMPARE. YOU'LL TAKE TACO.

TACO, Inc., 1160 Cranston St., Cranston, RI 02920 (401) 942-8000 Telex: 92-7627
TACO, (Canada) Ltd., 1310 Aimco Blvd., Mississauga, Ontario L4W 1B2 (416) 625-2160 Telex: 06-961179

Printed in U.S.A.
Copyright © 1985
TACO, INC.

REPLACING SEALS

Water flowing from weep hole in bracket normally indicates dirt on the seat or seal needs replacement. Before taking pump apart extend spring coupling and impeller shaft into body as far as it will go. This will separate the seal halves and permit a greater flow thru the weeping hole and wash any foreign matter off the seats. Release and if flow stops, it indicates that the seals do not require replacement. If the flow does not stop, loosen the two set screws on the coupling and extend as far as it will go. If leak stops it means there was insufficient tension on the coupling. If leak continues, indications are that the seal needs replacement. Proceed as follows: —

1. Disconnect wiring.
2. Valve off or drain system.
3. Remove body bolts and pull entire assembly out of body.
4. Loosen the two set screws at pump end of spring coupler, file off any burrs on shaft and pull impeller and shaft from bracket.
5. Pry out old seal seat from bracket with a screwdriver and old part from impeller shaft with a pair of pliers.
6. Clean shaft and seal bearing surfaces thoroughly with clean cloth.
7. Dip CARBON part of seal in water to lubricate, place on top of impeller shaft with carbon facing up. Push down on shaft with palm of hand as far as it will go. Then with both thumbs push all the way down making certain that prongs engage the two holes in the impeller. If there are no holes in the impeller, break off the prongs with a pair of pliers and smooth burrs with a file.
8. Separate rubber from ceramic part, wet it and set into recess in bracket. Set ceramic seal into rubber with seat facing out by starting at a slight angle first, then pushing away and down simultaneously. The rubber rings should not be folded over during the operation. Make certain that both the rubber and ceramic are "bottomed" squarely.
9. Clean both seal surfaces with a clean lintless cloth.
10. Place a few drops of oil along the impeller shaft and push slowly with a twisting motion through ceramic part into bracket and spring coupling.
11. While holding impeller and shaft with seal faces mating, insert an Allen wrench into one of the set screws in the coupling, extend spring — 3/16".
12. Remove old body gasket, clean surfaces and replace with new gasket.
13. Place entire assembly into body, replace and tighten bolts gradually and evenly all around.
14. Refill system. If water leaks from weep hole in bracket increase tension on spring coupling slightly more or until leak stops.
15. Rewire motor.

Taco	REPLACEMENT PARTS LIST
NUMBER **104-003**	Effective: April 15, 1987 Supersedes: PL100-1.2 dated 6/1/83

REPLACEMENT PARTS FOR 110 Through 120

REFER TO 103-012 for LIST PRICES

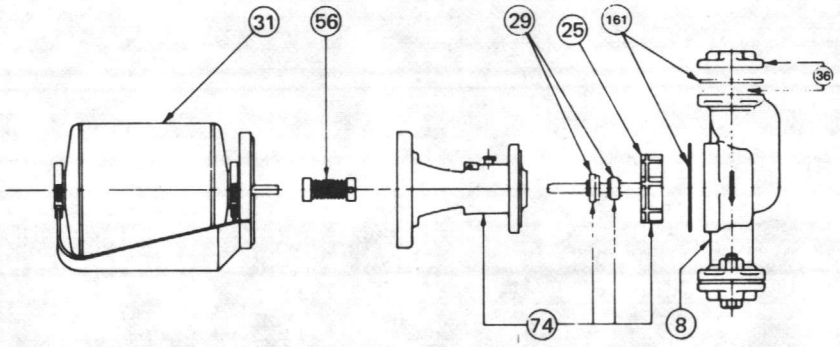

PARTS FOR 110 to 120 CIRCULATORS

NAMEPLATE MODEL NO.	ITEM 8 BODY	ITEM 25 IMPELLER & SHAFT	ITEM 31 MOTOR	ITEM 74 BEARING BRACKET	ITEM 161 GASKETS
CAST IRON					
HC, 110, 110C	110-226RP	110-207RP	110-223RP	110-361RP	110-127RP
HDH, 111, 111C	111-004RP	111-053RP	110-185RP	111-058RP	110-127RP
112	110-226RP	112-043RP	112-074RP	112-120RP	110-127RP
113	113-001RP	113-009RP	110-185RP	113-013RP	110-127RP
120-1 to 120-5	N/A	120-056RP	120-105RP	120-076RP	120-073RP
120-6 to 120-12	120-083RP	120-038RP	120-105RP	120-067RP	120-073RP
CAST IRON WITH NON-FERROUS IMPELLER					
112C	110-226RP	112-055RP	112-074RP	112-103BRP	110-127RP
113C	113-001RP	113-009RP	110-185RP	113-013RP	110-127RP
120C-1 to 120C-5	N/A	120-060RP	120-105RP	120-078RP	120-073RP
120C-6 to 120C-12	120-083RP	120-054RP	120-105RP	120-069RP	120-073RP
BRONZE					
HCB, 110B	110-226BRP	110-207RP	110-223RP	110-362BRP	110-127RP
111B	111-004BRP	111-053RP	110-185RP	111-059BRP	110-127RP
112B	110-226BRP	112-055RP	112-074RP	112-103BRP	110-127RP
113B	113-001BRP	113-009RP	110-185RP	113-012BRP	110-127RP
117B	N/A	110-207RP	110-223RP	110-362BRP	110-127RP
117B-S2, -S3	N/A	110-207RP	110-223RP	110-362BRP	110-127RP
120B-1 to 120B-5	N/A	120-060RP	120-105RP	120-077BRP	120-073RP
120B-6 to 120B-12	120-083BRP	120-054RP	120-105RP	120-068BRP	120-073RP

ITEM 29 –
Water Seal 110-275RP

ITEM 56 –
Coupler, 110-009RP

ITEM –
Flange Set
¾", 1", 1¼", & 1½"
Interchangeable.
Refer to Price Sheets 103-003. For 120 models with 2 holes, specify 1600-032BRP for Bronze, 1600-032RP for Cast Iron.
For 120 models with 4 holes, specify 120-044RP for Cast Iron, 120-044BRP for Bronze.

Taco, Inc. 1160 Cranston Street, Cranston, Rhode Island 02920 Telephone: (401) 942-8000 Telex: 92-7627

Litho in U.S.A.

Taco (Canada) Limited 1310 Aimco Blvd., Mississauga, Ontario L4W 1B2 Telephone: 416-625-2160 Telex: 06-961179

Taco Instruction Sheet

302-001

2½", 3" & 1600 Series Pumps

Plant I.D. No. 001-329

APPLICATION

All pumps covered by this instruction sheet are designed for pumping water.

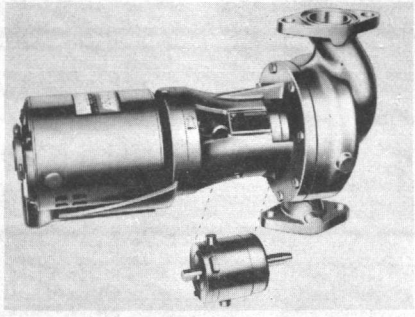

Working Pressure:	175 PSIG with cold water and 125 PSIG at rated temperature.
Temperature:	250°F Standard 300°F with Hi-Temp Seal

INSTALLATION:

Install horizontally only and with the two bracket ribs pointing to the ceiling. Do not support, suspend or brace motor and/or bracket. Support provided by casing is sufficient for structural integrity of the pump.

The casing can be rotated relative to the bracket for installation in vertical or horizontal pipe.

The pump must be installed far enough away from ceiling and walls to permit lubrication of bracket and motor.

"CAUTION": UNDER NO CIRCUMSTANCES SHOULD ANY PART OF BRACKET OR MOTOR BE COVERED WITH INSULATION.

START UP:

Before operating the pump for the first time check the following:

1. Is motor correctly wired for voltage in use?
   Warranty is void if motor is damaged due to improper electrical hook-up.
2. If a magnetic starter is used, see that the heater element is sized for the Service Factor load of the motor; otherwise, nusiance tripouts may occur.
3. Motor and pump are properly oiled at the factory. However, as a matter of precaution it is recommended that the oil level in the pump bracket be checked as specified on pump nameplate. An oil level slightly above the "full" mark on the dip stick can be tolerated.
4. Motors are properly aligned with pump at the factory and normally require no attention. If due to rough handling, the moter base becomes bent, realign by shimming between cast iron and steel section of motor base.
5. Before starting motor, ascertain that pump is filled with water to lubricate the seal. Do not operate pump dry for motor checkout.

LUBRICATION:

Pump must never be operated with oil level in bracket below low limit on dip stick. For replenishing, use premium grade SAE No. 30 oil only (see pump nameplate). Lubricate motor per instruction label attached to motor.

Quality Through Design — COMPARE.

TACO, INC. 1160 Cranston St., Cranston, RI 02920 (401) 942-8000 Telex: 92-7627
TACO (Canada) Ltd. 3090 Lenworth Drive, Mississauga, Ontario, Canada Telex: 06-961179

Printed in U.S.A.
Copyright © 1983
TACO, INC

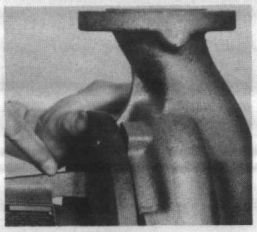

FIGURE 1

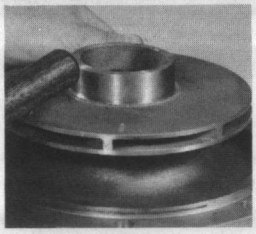

FIGURE 2

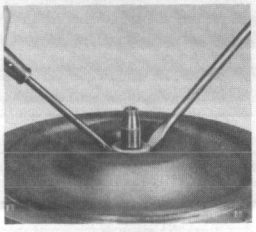

FIGURE 3

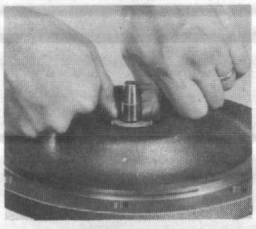

FIGURE 4

FIGURE 5

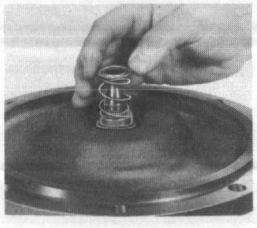

FIGURE 6

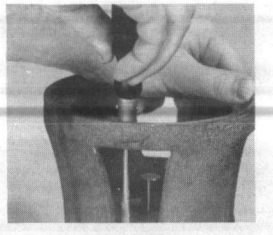

FIGURE 7

SEAL REPLACEMENT:

To replace the water seal, the following steps must be observed:

1. Disconnect electrical connections. Relieve system pressure and drain water from body.
2. Remove motor assembly from bracket and bracket from pump body.
3. Place bracket in vertical position, impeller up and loosen screw at center of impeller two turns. (7/16 Hex Head) This screw has a left-hand thread. Tap impeller at its outside diameter with handle of hammer to free tapered fit between shaft and impeller and completely remove screw, washer, and impeller. (see Figure 2)
4. Remove carbon assembly and ceramic seal by prying them loose with a screwdriver. (see Figure 3)
5. Thoroughly clean shaft and seat cavity.
6. Insert new seal seat. For easy assembly coat OD of seal rubber (either a cup or an O-ring) with special grease provided in small container. Do not use any other oil or grease. Push seat all the way down into cavity. Seat must not be cocked relative to shaft. Be sure face of seal stays absolutely clean – wipe surface with soft, clean cloth if necessary. (see Figure 4)
7. Install new carbon assembly. Coat inside of rubber bellows with special grease provided (do not use any other oil or grease) and slide assembly (carbon first) over shaft until carbon meets seat. Push on rubber insert on very end of assembly and not on outside diameter of carbon retainer. Be sure carbon face stays absolutely clean. (see Figure 5)
8. Install spring and spring retainer with raised face inside spring. (see Figure 6)
9. Replace impeller using new impeller screw and washer provided. Make sure cones of both impeller and shaft are clean.
10. Reassemble bracket into pump casing new gasket provided. Clean gasket surface of both casing and bracket if necessary. Be sure that the longer of the two outside bracket ribs is on top. (see Figure 1)
11. Reinstall coupler and motor.
12. Follow procedure outlined under section Start Up where required.

IMPELLER REPLACEMENT:

Follow steps 1 through 3 and 8 through 12 outlined under section Seal Replacement.

BEARING (CARTRIDGE) REPLACEMENT:

If for some reason the bracket bearings should fail, it is not necessary to replace the entire bracket.

A pre-lubricated cartridge containing bearings and shaft is available. To change the cartridge, follow this procedure:

—Follow steps 1 through 4 as outlined under section SealReplacement.

—Flip bracket around so that motor end is on top.

—Remove the two outermost socket head screws. (see Figure 7)

—Pull out old cartridge. If necessary tap cone end of shaft with a hammer to accomplish this.

—Insert new cartridge and refasten with socket head screws. Make sure shaft sleeve is in place with cone on sleeve resting against cone of shaft.

—Follow steps 5 through 12 outlined under section Seal Replacement.

Note: It is recommended that when changing the cartridge the water seal be replaced also. However, if you plan to re-use the water seal it is not necessary to remove the seal seat. The carbon assembly may be lubricated with water to make reinstallation easy.

INSTRUCTION SHEET

NUMBER

IS-100-1.3

Effective: May 1, 1981
Supersedes: IS 300-1-1 dated 11/25/68

PUMP SERVICING INSTRUCTIONS – NOS.

121-7	1600-1	1620-1
122-7	1602-1	1622-1
131-6	1604-1	1624-1
132-6	1610-1	1630-1
133-6	1612-1	1632-1
138-2	1614-1	1634-1

Plant ID. No. 001-322

ITEMS TO CHECK BEFORE STARTING

1. Motor and bracket have been properly lubricated at the factory and should not require additional lubricant. Before starting, check oil level in bracket thru sight oil gauge. Level should be between top and center of window. If, for some reason, level is below center of window, see instructions on oil well cover.
2. Check motor and power supply for proper wiring connections and voltage. If motor is damaged due to improper wiring hook-up, guarantee is void.
3. The casing is rotatable and may be installed in a vertical or horizontal pipe. The motor and bracket must be horizontal in all cases with oil well cover facing the ceiling.

LUBRICATION

Motor– Motor is well oiled before shipment in accordance with manufacturer's recommendation and should not require any oil upon arrival. When oil is required, follow instructions attached to the motor end shield plates.

Pump– (For best results TACO-LUBE #12 is recommended. Maintain oil level at all times within limits specified on oil well cover.

MOTOR ALIGNMENT

All circulator motors are aligned within required tolerances when shipped. They normally do not require any attention. If due to rough handling the motor base becomes bent, loosen screws connecting cast iron and steel sections of the motor base and place shims between the two sections until the motor shaft is properly aligned with the pump shaft.

TO REPLACE WATER SEAL AND/OR IMPELLER

1. Stop pump and close suction and discharge valves.
2. Drain water from casing.
3. Remove pipe plug on opposite side of oil gauge and drain oil (water may have gotten into oil reservoir).
4. Remove motor assembly from bracket.
5. Remove bracket from pump body. Loosen set screw and pull out pump end of drive coupling. DO NOT BEND SHAFT.
6. Remove oil well cover, loosen set screw in inside Thrust Collar and while holding Thrust Collar, remove Impeller and Shaft, Thrust Washers and Thrust Collar.
7. Clean bearings and bracket and inspect for possible damage. Clean sight oil gauge.
8. Remove stationary seal from bracket, clean recess and apply a film of light oil to OD of new stationary seat rubber cup, press firmly in place with thumbs. Be certain it is "bottomed" equally, otherwise it might leak.
9. Gently remove old seal parts from shaft with a rotating motion and clean entire shaft with soft clean cloth (Do not use much pressure). Drop new spring and holder onto the shaft.
10. Apply a good film of oil, from the very end of the shaft right down to, and slightly beyond the end of the spring. With the seal in the palm of the hand (seat facing the hand) and with an oscillating motion, press seal over end of shaft then down to free length of the spring. Line up seal, spring and spring holder.
11. Thoroughly clean both seal faces with a soft clean cloth.
12. Remove set screw from Thrust Collar. Apply a film of oil to each side of Thrust Collar, then place a Thrust Collar Washer on each side of the Thrust Collar with the LIGHT COLORED (Cadmium Plated) SIDES facing the Thrust Collar. While holding this 3 Part Assembly (Thrust Collar and two Washers) in the oil reservoir with grooves on OD of Collar facing the Impeller, slide Impeller and Shaft into bracket so that hole in Shaft is directly in line with screw hole in Thrust Collar. Insert and tighten set screw until it bottoms in the hole in the shaft, then turn back 1/16 of a turn. This automatically adjusts the spring tension on seal. THIS LAST OPERATION MUST BE ACCOMPLISHED IMMEDIATELY AFTER OPERATIONS 10 AND 11. IF TOO MUCH TIME ELAPSES, THE OIL MAY BE SQUEEZED OUT FROM UNDER SHAFT SEAL, PREVENTING THE RUBBER PART OF SEAL FROM SLIDING ON SHAFT WHICH IS NECESSARY WHEN PERFORMING OPERATION 12.
13. Re-assemble motor and coupling assembly to bracket and bracket to casing, making certain that casing gasket is in good condition and properly located. Engage teeth of rubber coupling insert with those in the metal ends. Bring all three parts together, then back off one end about 1/32" and tighten. Do not squeeze rubber insert, some pump sizes use A "FIGURE-8" shaped one piece coupler. Install without stretching or compressing.
14. Open valves in suction and discharge lines and vent air thru vent holes, if provided. Start motor for TWO SECONDS, then stop and inspect for water leaks. If any leaks occur, one or more previous operations must be repeated.
15. If no leaks occur, re-fill oil reservoir as previously indicated under LUBRICATION-PUMP and replace oil well cover.
16. Start pump and again check for leaks. (Note: If pump is operated longer than 30 SECONDS without being primed, the mechanical seal could be damaged).

Taco, Inc. 1160 Cranston Street, Cranston, Rhode Island 02920 Telephone: (401) 942-8000 Telex: 92-7627

Litho in U.S.A.

Taco (Canada) Ltd. 3090 Lenworth Drive, Mississauga, Ontario Telephone: (416) 625-2160 Telex: 06-961179

Taco

REPLACEMENT PARTS

NUMBER
304-001

Effective: November 1, 1987
Supersedes: 304-001
dated: 12/1/85

121 THRU 138 PUMPS
1600 SERIES PUMPS

IMPORTANT: When ordering, always specify part number, part name, and complete model number of pump.

CARTRIDGE DESIGN PUMPS

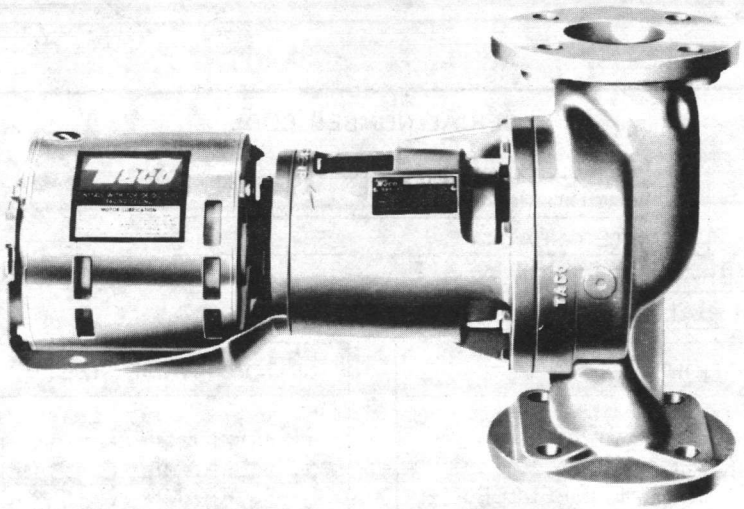

121 – 138 SERIES PUMPS

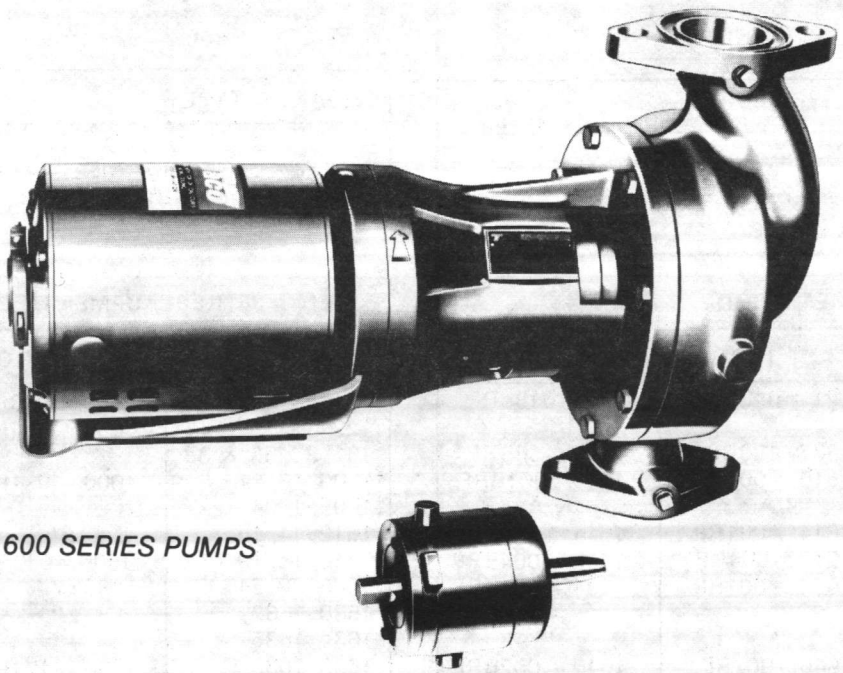

1600 SERIES PUMPS

Taco, Inc. 1160 Cranston Street, Cranston, Rhode Island 02920 Telephone: (401) 942-8000 Telex: 92-7627

Litho in U.S.A.

Form No. F304-001 Taco (Canada) Limited 1310 Aimco Blvd., Mississauga, Ontario L4W 1B2 Telephone: 416-625-2160 Telex: 06-961179

REPLACEMENT PARTS FOR (–9) AND SERIAL NUMBER CARTRIDGE DESIGN PUMPS

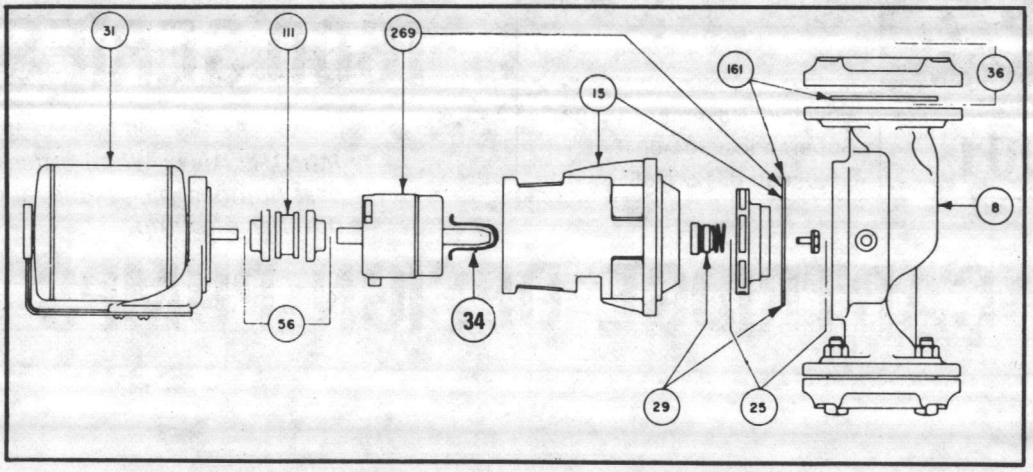

SERIAL NUMBER CODE

1600 - 4.25 C 1&2 N 1 N

- N — FLANGE TYPE
- 1 — MOTOR FRAME SIZE
- N — WATER SEAL
- 1&2 — BRACKET DESIGN
- C — MATERIAL OF CONSTRUCTION

MATERIAL OF CONSTRUCTION

X O O O O

A CAST IRON PUMP AND IMPELLER (3)
B ALL BRONZE PUMP AND IMPELLER
C CAST IRON PUMP AND BRONZE IMPELLER

MOTOR FRAME SIZE*

O O O X O

1 48 FRAME (1/4, 1/3, 1/2 HP)
2 56 FRAME (3/4, 1 HP)
3 56 FRAME (1 1/2, & 2 HP)
4 56 FRAME (3 HP)

* Refer to standard motors only. See nameplate for other motors.

BRACKET DESIGN

O X O O O

1 ALL CURRENT STYLE PUMPS

WATER SEAL TYPE, ITEM # 29

O O X O O

N 1600 – 170RP NI – RESIST
H 1600 – 170HRP TUNGSTEN CARBIDE
E 1600 – 170ERP CERAMIC

FLANGE TYPE

O O O O X

N NPT (STANDARD)
D DIN (EXPORT)

ITEM # 8 REPLACEMENT BODY

PUMP MOD. NO.	CAST IRON	BRONZE
121	121 – 018RP	121 – 018BRP
122	"	"
131, 32, 33 & 38[1]	133 – 150RP	133 – 150BRP
1600, 10, 11[1]	1610 – 001RP	1610– 001BRP
1602, 1604[2]	N/A	N/A
1612, 14, 15	1614 – 001RP	1614 – 001BRP
1616, 18, 19	1618 – 004RP	1618 – 004BRP
1620, 22, 24	1634 – 001RP	1634 – 001BRP
1630. 1632	"	"
1634, 1635	"	"
1636, 1638	1640 –002RP	1640 – 002BRP
1640, 1641	"	"

ITEM # 36 REPLACEMENT FLANGE SET

PUMP MOD. NO.	CAST IRON	BRONZE
121	1600 – 033RP	1600 – 033BRP
122	1600 – 034RP	1600 – 034BRP
131, 32, 33, & 38	"	"
1600, 10, 11	1600 – 031RP	1600 – 031BRP
1602, 1604	"	"
1612, 14, 15	"	"
1616, 18, 19	1600 –032RP	1600 – 032BRP
1620, 22, 24	"	"
1630, 1632	"	"
1634, 1635	"	"
1636, 1638	1600 – 174RP	1600 – 174BRP
1640, 1641	"	"

Note (1) When replacing Item #8 body on 131, 132, 133, 138 and 1600C – 1& –9, you must also order current style impeller.
Note (2) Body for the 1602 & 1604 are no longer available. Consult factory.

ITEM # 15 REPLACEMENT BRACKET					ITEM # 161 GASKET KIT
PUMP MOD. NO.	MOTOR FRAME SIZE (48)		MOTOR FRAME SIZE (56)		
	CAST IRON	BRONZE	CAST IRON	BRONZE	
121, 122	1600 – 155RP	1600 – 156RP	N/A	N/A	1600 –050RP
1600, 10, 11	"	"	N/A	N/A	"
1602, 1604	1600 – 175RP	1600 – 176BRP	N/A	N/A	"
1612, 20, 30	"	"	N/A	N/A	"
131, 132	"	"	N/A	N/A	"
1615 *	–	–	–	–	"
133, 138	NA	N/A	1604 – 023RP	1604 – 024RP	"
1614, 22, 24	N/A	N/A	1604 – 023RP	1604 – 024RP	"
1632, 34	N/A	N/A	1604 – 023RP	1604 – 024RP	"
1635 *	—	—	–	–	"
1616, 36	N/A	N/A	1604 – 025RP	1604 – 026RP	1618 – 006RP
1619 *	—	—	–	–	"
1638, 40, 41	N/A	N/A	1604 – 025RP	1604 – 026RP	"

* Select bracket, per motor frame size code in serial number.

ITEM #25 REPLACEMENT IMPELLER ASSEMBLY								
PUMP NO.	(-9) PUMPS	CURRENT	DIA. -9	DIA. CUR.	PUMP NO.	(-9) PUMPS	CURRENT	DIA. CUR.
121, 122	121 – 142BRP	121 – 142BRP	4.30	4.30	1618	1618 – 001BRP	N/A	7.900
131	131 – 075BRP	1630 – 023BRP	4.80	4.40	1619 *	N/A	1619 – 001BRP	
132	132 – 063BRP	1630 – 022BRP	5.20	4.90	1620	1620 – 022BRP	N/A	5.100
133	133 – 075BRP	1632 – 022BRP	5.75	5.65	1622	1622 – 020BRP	N/A	5.850
138	138 – 037BRP	1634 – 023BRP	6.25	6.15	1624	1624 – 040BRP	N/A	6.500
1600	1600 – 179BRP	1610 – 020BRP	4.75	4.50	1630	1630 – 022BRP	1630 – 022BRP	4.900
1602	1602 – 025BRP	N/A	5.500		1632	1632 – 022BRP	1632 – 022BRP	5.650
1604	1604 – 028BRP	N/A	6.200		1634	1634 – 023BRP	1634 – 023BRP	6.150
1610	1610 – 019BRP	1610 – 019BRP	4.750		1635 *	N/A	1635 – 001BRP	–
1611 *	N/A	1611 – 001BRP	–		1636	1636 – 001BRP	1636 – 001BRP	6.400
1612	1612 – 019BRP	1612 – 019BRP	5.750		1638	1638 – 001BRP	1638 – 001BRP	6.900
1614	1614 – 018BRP	1614 – 018BRP	6.350		1640 *	1640 – 001BRP	N/A	7.900
1615 *	N/A	1615 – 001BRP	–		1641 *	N/A	1641 – 001BRP	–
1616	1616 – 002BRP	1616 – 002BRP	7.100					

* When ordering, please advise diameter of impeller.

ITEM # 31 REPLACEMENT MOTOR ASSEMBLY *				
HP	115/60/1	115/230/60/1	200/60/3	230/460/60/3
1/4	121 – 151RP	N/A	121 – 148RP	121 – 137RP
1/3	131 – 143RP	N/A	131 – 115RP	131 – 137RP
1/2	N/A	132 – 096RP	132 – 066RP	132 – 097RP
3/4	N/A	133 – 119RP	133 – 140RP	133 – 134RP
1	N/A	138 – 119RP	138 – 148RP	138 – 142RP
1½	N/A	1636 – 013RP	1636 – 019RP	1636 – 010RP
2	N/A	1638 – 012RP	1638 – 015RP	1638 – 010RP
3	N/A	N/A	1640 – 013RP	1640 – 010RP

* When ordering other than standard, refer to nameplate, then consult factory.

ITEM #34 SHAFT SLEEVE	1600 – 205	All –9 and Serial Number Pumps.
ITEM #56 COUPLER	1624 – 053RP	All Inline Pumps ¼ thru 2 HP.
ITEM #56 COUPLER	1624 – 041RP	All Inline Pumps 3 HP.
ITEM #111 RUBBER INSERT	1624 – 004RP	All 4J Couplers.
ITEM #111 RUBBER INSERT	1624 – 020RP	All 3J Couplers.
ITEM #111 RUBBER INSERT	900 – 512	All 5J Couplers.
ITEM #269 CARTRIDGE ASSY.	1600 – 160RP	All -9 and Serial Number Pumps.

REPLACEMENT PARTS FOR OLD STYLE PUMPS AND CIRCULATORS *

*121+122-3-7; 131, 132+133-3-6; 138-1+2; 1600, 1602, 1604, 1610, 1612, 1614, 1620, 1622, 1624, 1630, 1632, 1634-1+-C1.

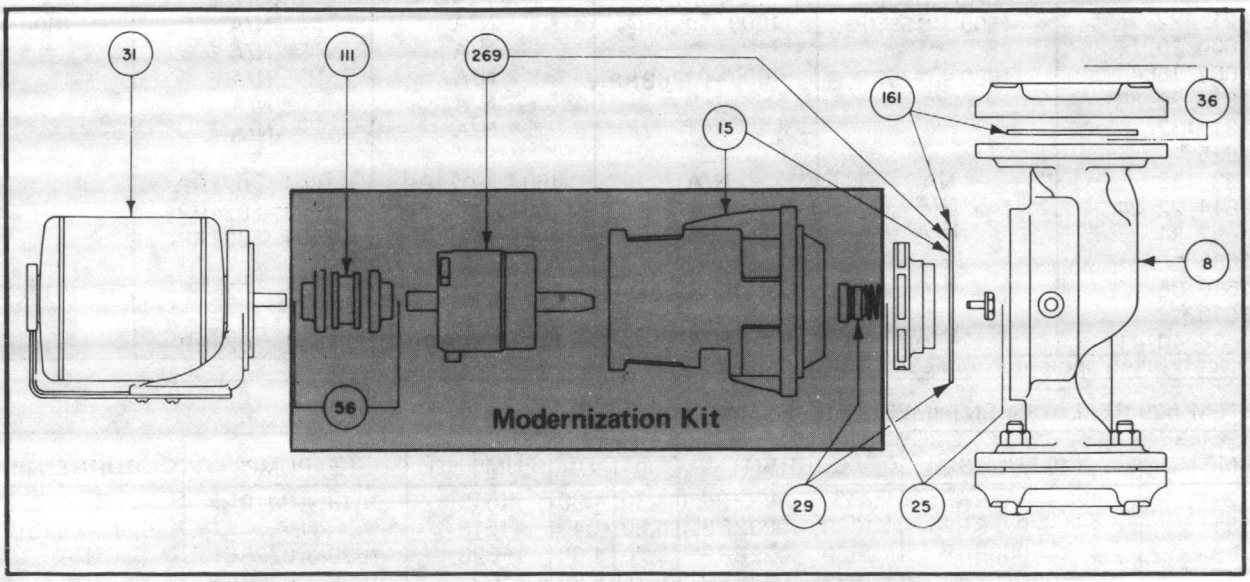

ITEM # 8	BODY	Same as –9 and Serial Number Pumps.
ITEM # 25	IMPELLER AND SHAFT ASSEMBLY	No longer available . Must purchase Item #74 Modernization Kit listed below, Plus –9 IMPELLER
ITEM # 29	SEAL KIT	Part No. 1600 – 055RP
ITEM # 31	MOTOR ASSEMBLY	Same as –9 and Serial Number Pumps.
ITEM # 36	FLANGE SET	Same as –9 and Serial Number Pumps.
ITEM # 56	COUPLER	Same as –9 and Serial Number Pumps.
ITEM # 111	RUBBER INSERT	Same as –9 and Serial Number Pumps.
ITEM # 161	GASKET KIT	Same as –9 and Serial Number Pumps.

ITEM # 74 MODERNIZATION KIT*

PUMP NO.	MOTOR FRAME SIZE (48)		MOTOR FRAME SIZE (56)		
	CAST IRON	BRONZE	CAST IRON	BRONZE	
121, 122	121 – 154RP	122 – 002RP	N/A	N/A	
131, 132[2]	131 – 144RP	132 – 145RP	133 – 147RP	138 – 153RP	
133, 138	N/A	N/A	"	"	
1600, 1610	121 – 154RP	122 – 022RP	N/A	N/A	
1602, 1604[2]	131 – 144RP	132 – 145RP	133 – 147RP	133 – 147RP	
1612, 1620[2]	"	"	133 – 147RP	138 – 153RP	
1630[2]	"	"	"	"	
1614, 1622	N/A	N/A	"	"	
1624, 1632	N/A	N/A	"	"	
1634	N/A	N/A	"	"	

Note (2) Select modernization kit per motor frame size. Select impellers per selection chart on previous page, under –9 column

*Change

Taco	INSTALLATION AND OPERATION INSTRUCTIONS	
NUMBER IS 300-2.2	Effective: September 1, 1982 Supersedes: IS300-4 dated 3/31/68	

TACO BASE MOUNTED PUMPS

(SLEEVE AND BALL BEARING)

Plant ID No. 001-922

A—INSTALLATION

A1-LOCATION

Locate pump in an easily accessible place with sufficient space around it for maintenance and servicing. On larger pumps allow head room for the use of hoists or overhead cranes. Locate pump on a dry and clean place so that motor will be protected from moisture and dust.

On closed heating systems place compression tank at the suction side of the pump. When pump head is less than 20 feet, it is permissible to connect compression tank to discharge side of pump.

On open systems, install pump close to liquid supply and make suction piping as short and as straight as possible.

A2-FOUNDATION

The foundation serves to carry the pump weight and to absorb vibration. Normally, the foundation is made of concrete block, preferably tied in with the floor or ground. Make the foundation block about 4" longer and 4" wider than the base of the frame. Height of the block may vary from 2/3 to 1 times the *width* of the foundation (Fig. 1). When foundation is poured, provide a hole near each of the four (4) corners. To simplify installation and maintenance use lead Anchors. Place the front Anchor about 2" from the edge of the foundation to clear overhanging casings (Fig. 2).

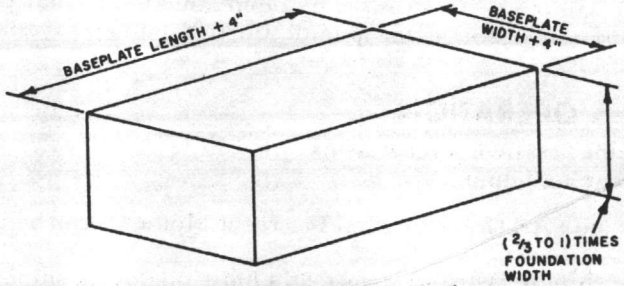

Fig. 1—Foundation Block

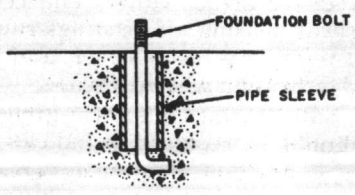

Fig. 2—Foundation Bolt

A3-PIPING

Correct piping is of prime importance for the proper operation and long life of the pump. Stresses induced by piping will cause excessive wear of seals, bearings, and couplings that could ultimately destroy these elements.

Both suction and discharge piping should be suspended close to the pump connections, so that no pipe weight rests on the pump. Pipe flanges and pump flanges should align perfectly before connections are made, piping should never be drawn by force into place.

Thermal expansion of piping requires special attention on heating installations. If no room is provided for pipe expansion, stresses are induced in the piping that will exert a load on the pump. Forces created by pipe stresses can exceed by far the load exerted through pipe and water weight. Stress forces can distort pump, bend shafts, wear out seals, and impeller wear rings, and ultimately burn out bearings. To protect pump from thermal pipe stresses, provide spring hangers and flexible connectors that are suitable to compensate for pipe expansion. (See Fig. 3).

Install gate valves on both suction and discharge side of the pump to allow servicing without draining the system. Also provide a flanged nipple (spool) between gate valve and suction end of the pump to enable you to take the pump apart without disturbing piping (Fig. 3). In order to have them easily accessible, the pump and flange nipples should not be covered with insulation.

On open pumping systems drawing water from a level below the pump (suction lift) install a foot valve with strainer. On open systems where the pump is located below the suction water level (suction head) install a check valve in the discharge line close to the pump.

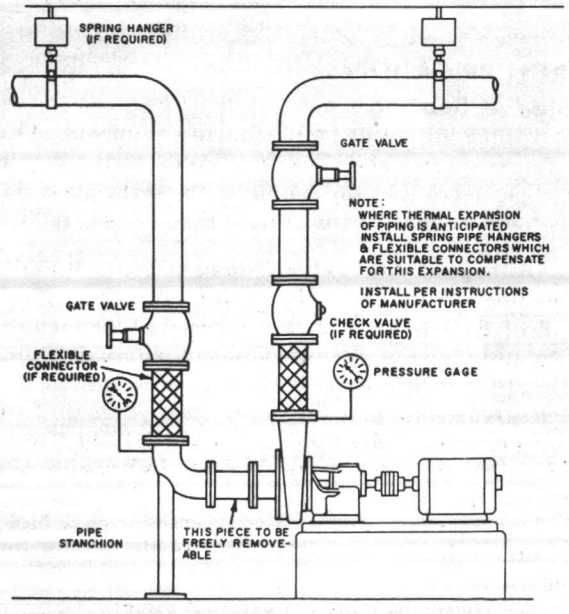

Fig. 3—Typical Installation—Vertical Piping

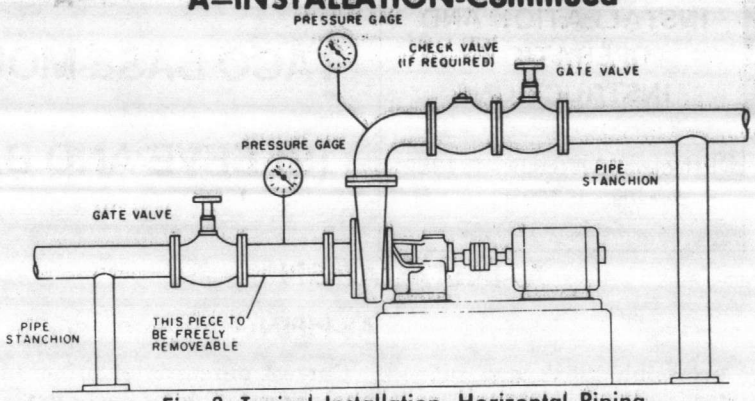

Fig. 3—Typical Installation—Horizontal Piping

A4-PUMP SETTING

When pump is set on its foundation, make sure to have it properly levelled. Place baseplate over foundation bolts provided for it, place shims at corners of baseplate when required and level with a spirit gauge. Tighten baseplate firmly to its foundations. Check also level of suction and discharge flanges.

A5-COUPLING ALIGNMENT

Proper alignment of pump and driver will assure trouble-free operation and long life of the pump. Misalignment will cause rapid wear of seals, couplings, and bearings. All pumps are carefully aligned before leaving the factory. However, experience indicates that alignment invariably changes in shipping and handling. Therefore, it is of utmost importance that alignment be checked at various steps of the installation process. i. e., **after leveling, after piping, and after first few weeks of operation.**

Check alignment by placing a slotted straight edge across the coupling halves at top, bottom, and at the sides. If any light is seen between the straight edge and one of the coupling flanges, it means the unit is out of alignment. (Fig. 4)

If light is seen at top and bottom position of the straight edge, alignment is out of height. Usually shims are placed under the motor feet. Loosen the four motor bolts, remove or add shims as required to correct proper height. Tighten the motor bolts and check to make sure alignment was corrected properly.

If alignment is out on the sides of the coupling, loosen the four motor bolts and lightly tap the motor in the direction required. Tighten the four motor bolts and check to make sure alignment was corrected properly.

As alignment in one direction may alter the alignment in another, be sure to check all alignments made.

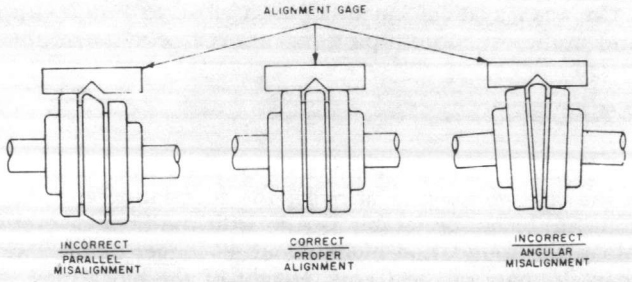

Fig. 4—Coupling Alignment

A6-CONNECTING PIPING

Piping may now be connected to pump. Make sure that pump and pipe flanges are strictly parallel and properly spaced for the gasket that will be used. Also check that pipes are supported properly and do not rest on pump flanges. Never draw pipes by force to pump flanges. Recheck alignment after piping connections are made. If misalignment was caused by piping, it is a sign that pipe stresses distorted the pump. Correct piping to relieve stresses.

B—PUMP START-UP & OPERATION

Before starting up pump for the first time several items are to be checked to avoid damaging pump.

B1-LUBRICATION

Sleeve Bearing pumps are filled with oil at the factory but some oil might be lost during shipment. As a matter of precaution, check oil level before starting up pump. Proper level is at the center of the sight glass. If oil level is too low, remove top cover (Fig. 5) and refill.

Drain and refill oil well once a year. Initial filling is Socony Mobil DTE Heavy Medium Oil, but any premium SAE Grade 20 Non-Detergent Motor Oil can be used.

Motor bearings also might loose oil during shipment. Check oil level as indicated on motor instruction. Electric motors have either an oil cup or a pipe plug for filling. An overflow is located at the side of the bearing area. Before starting unit, fill motor bearing with an oil can until oil flows out of overflow.

Ball Bearing pumps are greased at the factory. Grease will not flow out during shipment, so no checking will be required at startup.

Regrease ball bearings every two years or 3,000 hours of operation. Initial filling is LUBRIKO-grease, Density M31, manufactured by Master Lubricants Company, Philadelphia.

Any general purpose ball bearing grease No. 3 NLGI (National Lubricating Grease Institute) hardness may be used.

To grease bearings open side covers (Fig. 5), slide them about 1/2" to the side and introduce grease thru the opening with a putty knife. Fill grease chamber 2/3 high. Excessive grease causes unnecessary friction and will overheat bearing. If bearings run hot after regreasing, stop pump, open side cover, and wipe out excessive grease. Overheating will then cease.

Motor ball bearings also are greased at the factory. Grease should be replaced as indicated by motor manufacturer's instruction. Normally greasing is required every two years. On electric motors grease is usually introduced through a grease fitting with a grease gun.

B—PUMP START-UP & OPERATION-Continued

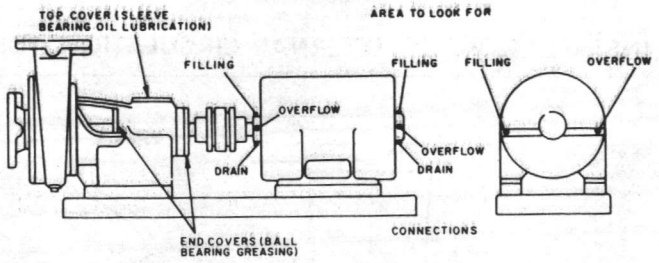

Fig. 5—Lubrication Points

B2-MOTOR WIRING & SENSE OF ROTATION

Check wiring of motor before starting to make sure that connections are wired properly for the voltage in use. Overvoltage can burn out motor windings. Check heater element in magnetic starter to see that it is rated the same as the motor.

AMP RATING FOR 3 PHASE SQUIRREL CAGE INDUCTION MOTORS

Motor HP	220 Volt 1750 RPM	220 Volt 3450 RPM	440 Volt 1750 RPM	440 Volt 3450 RPM
1/4	1.0	–	.5	–
1/3	1.4	–	.7	–
1/2	1.8	–	.9	–
3/4	2.4	2.2	1.2	1.1
1	3.6	3.4	1.8	1.7
1 1/2	4.8	4.6	2.4	2.3
2	6.2	5.6	3.1	2.8
3	9.0	8.0	4.5	4.0
5	14.4	13.4	7.2	6.7
7 1/2	20.0	19.2	10.0	9.6
10	26.4	25.6	13.2	12.8
15	39.0	38.0	19.5	19.0
20	51.0	50.0	25.5	25.0
25	62.0	60.0	31.0	30.0
30	74.0	72.0	37.0	36.0
40	96.0	–	48.0	–
50	120.0	–	60.0	–

Before attempting to check out sense of rotation of pump, fill pump with water to provide lubrication of the seal. **Do not operate pump dry for motor checkout.**

Next throw the switch and see if direction of rotation corresponds with arrows on frame of pump. The direction of rotation is counterclockwise facing the suction end of pump. Direction of rotation of three phase motors can be easily reversed by interchanging two of the three wires at the terminal board of the motor. Reversing of single phase motors is done by interchanging some internal wires or clamps. Instructions for reversing are found either on the motor nameplate or inside the motor terminal cover.

B3-PUMP START-UP

After you have checked lubrication and wiring you are ready to start the pump.

Open the gate valve in the suction side and close the valve on the discharge side. Start motor, wait until unit has come to full speed and then open discharge valve slowly. Do not run pump for more than a few minutes with completely shut valves. If system conditions call for part-time operation against shut valves, install a bypass line from discharge to suction.

B4-MECHANICAL SEAL AND STUFFING BOX CARE

Mechanical Seal (See caution below)*

Mechanical seals are the most delicate component of the pump. Special care has to be given to them to assure trouble-free operation.

The sealing element of a mechanical seal consists of a carbon washer rotating against a stationary ceramic ring.

Surfaces of both are highly lapped to assure sealing. Any dirt that penetrates between the two mating parts will cause a rapid wear of the seal faces and will ultimately result in seal leakage.

New heating systems are usually contaminated by various materials such as construction debris, welding slugs, pipe joint compound, mill scale, etc. It is of utmost importance that such systems be cleaned out thoroughly before putting pump into continuous operation.

Cleaning of a heating system is simple and easy. First flush out system with cold water at city pressure to remove all loose foreign matter that penetrated into the system. Afterwards boil out system with chemicals to remove dirt adhering to pipes.

Chemicals most commonly used for this procedure are sodium triphosphate, sodium carbonate, or caustic soda, but any nonfoaming detergents as used in dishwashers can be applied.

Fill system with clean water, add cleaning chemicals (1) lb. for every 40 to 50 gallons of water, (or Mfrs. Instruction) start pump and heat up system. Let system run for a few hours, then drain and refill with fresh water. Your pumps are now ready for continuous duty. (See caution below).*

Stuffing boxes are less delicate in operation than mechanical seals. No chemical cleaning is necessary as on mechanical seal pumps, but flushing out with cold water is beneficial on this type of pump too.

After pump is started up adjust gland of stuffing box evenly so that it drips from one to three drops of water per minute. This drip is absolutely essential to prevent damage to packing and shaft sleeve. It also prevents overloading of motor. Excessive dripping may cause air to enter pump under certain conditions.

Sump of pump should be piped to any convenient sewer or drain. A pipe tapping is provided for this purpose at the side of the sump. Never plug this drain tapping.

*CAUTION: The addition of certain chemical additives to systems utilizing TACO Equipment, voids the warranty.

INSTALLATION OF EXTERNAL CIRCULATION TUBE

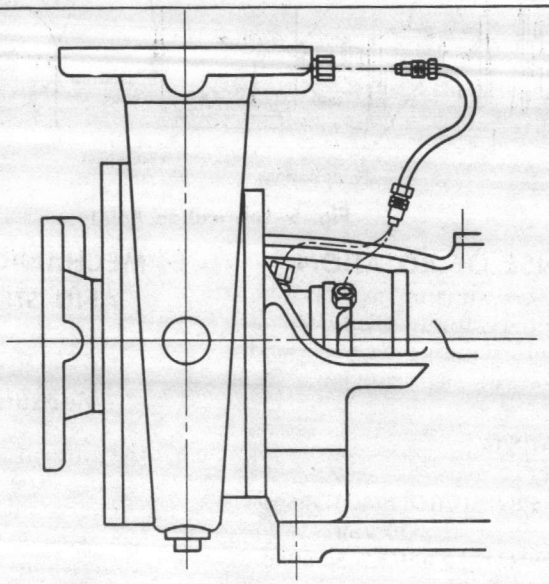

IMPORTANT

Before filling system with water, assemble external circulation tube to pump casing as follows:

1. Screw nut into body until hand tight.
2. With a wrench continue tightening for about one and one-half full additional turns. (It is not necessary to tighten nut all the way down)

INSTALLATION OF PUROCELL FILTER

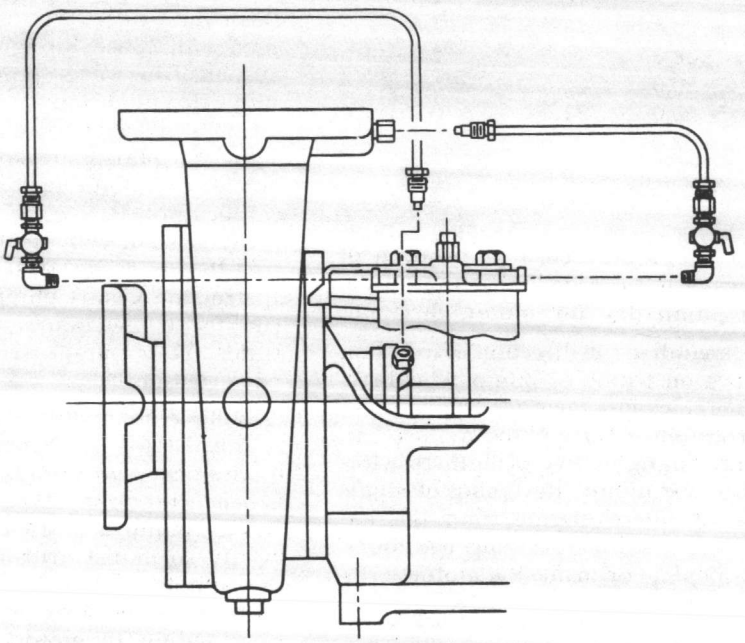

IMPORTANT

1. Attach Filter to the pump by loosening the top bolt on the frame and casing and slip bracket under bolt and tighten.
2. If Recirculating line is installed — remove from frame and insert this end into inlet of Filter.
3. Attach line from outlet of the filter to seal retainer cap.

Taco, Inc. 1160 Cranston Street, Cranston, Rhode Island 02920 Telephone: (401) 942-8000 Telex: 92-7627

Litho in U.S.A.

Taco (Canada) Limited 1310 Aimco Blvd., Mississauga, Ontario L4W 1B2 Telephone: 416-625-2160 Telex: 06-961179

Copyright© 1983 TACO, INC.

Taco	MAINTENANCE AND SERVICING INSTRUCTIONS
NUMBER **IS300-2.3**	Effective: October 1, 1982 Supersedes: IS300-2.3 dated 4/1/81

TACO "LP" SERIES

BALL & SLEEVE BEARING BASEMOUNTED AND CLOSE COUPLED

Plant ID, No. 001-359

MAINTENANCE AND SERVICING

GENERAL

Before starting any service work on the pump, read these instructions carefully.

A step by step procedure of the most common service jobs is given to assist you in performing the service required. Follow each step on the exploded views on the replacement parts list. Item numbers, part numbers and quantities required for any replacement part is provided on the replacement parts list.

Be certain to stop pump and close suction and discharge valves before starting any service work.

To gain access to internal parts of pump, remove flanged nipples (spool piece) or flex connectors that have been provided on suction and discharge sides of pump.

If no freely removeable piece is provided on suction side of pump, you can service the pump by disconnecting both suction and discharge flanges and remove the frame hold-down bolts. The pump end can now be moved for convenient servicing. On close coupled pumps with anchor blocks, the above applies. For close coupled pumps not using anchor block an alternate method will have to be used.

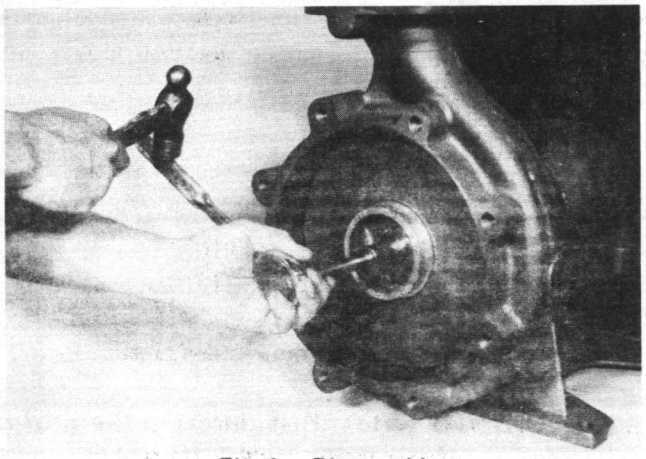

Fig. 1 – Disassembly

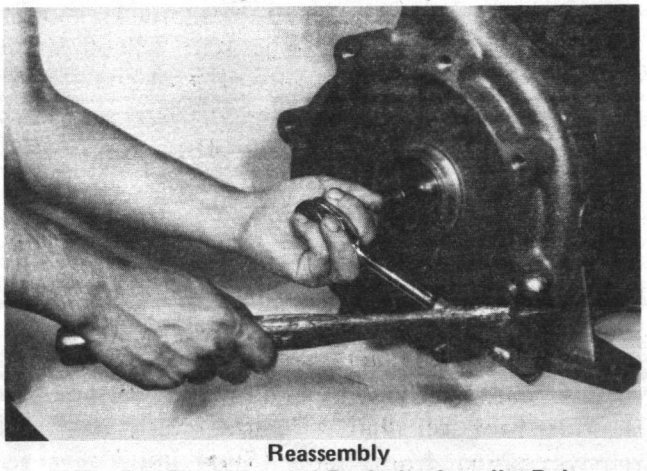

Reassembly
Fig. 2 – Removing and Replacing Impeller Bolt

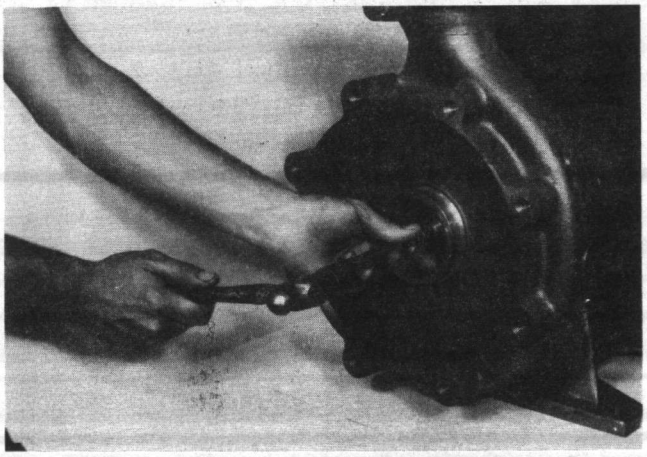

Fig. 3 – Hitting on Drift – Impeller Bolt

1. REPLACING IMPELLER

Required Replacement Parts
Item No. 6 Impeller
Item No. 3 Suction Cover O Ring,
Pipe Flange Gaskets

DISASSEMBLY

Remove suction cover bolts and remove suction cover from pump. Loosen impeller bolt (right hand thread) with socket or offset box wrench. Remove impeller bolt, belleville washer and impeller washer. Remove impeller and impeller key.

MAINTENANCE AND SERVICING

REASSEMBLY

Be certain that shaft and key way are clean and free of burrs. If grease is applied to shaft end, key way and impeller bolt, use only silicon grease.

Replace impeller key and slide impeller on shaft end. Reassemble belleville washer and impeller washer on impeller bolt and then tighten down firmly.

Replace suction cover o ring and reassemble suction cover to pump. Be certain that boss for gauge on suction cover flange be up. Replace flange gasket and reconnect flange. Tighten suction cover and flange bolts evenly.

2. REPLACING SEAL

Required Replacement Parts
- Item No. 3 Suction Cover O Ring
- Item No. 9 Impeller Spacer (If badly worn)
- Item No. 91 Seal Kit
  (Includes Items No. 28, 29, 35 & 67)

CAUTION: Be certain that during entire process of replacing seals, its rubber parts do not come into contact with any regular oil or grease. Silicon Grease is provided with all seal kits and this is the only grease that should be used to lubricate rubber parts.

DISASSEMBLY

Follow disassembly steps for impeller replacement, however you must also disconnect the discharge flange. Remove external re-circulation line if one is provided. Remove seal retainer cap bolts. Tap the seal retainer cap lightly with hammer to loosen it and slide it back on shaft. Remove casing bolts and remove casing from frame. Slide impeller spacer, sleeve with water seal on it, seal retainer cap and sleeve gasket off shaft. Remove stationary seal seat from seal retainer cap. Clean if necessary, with fine emery cloth, shaft, impeller spacer, seal retainer cap and casing which mates with seal retainer cap.

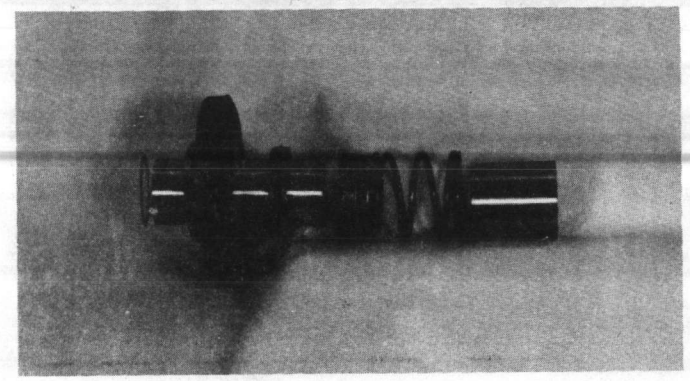

REASSEMBLY

For ease of assembly lubricate o.d. of o ring of seal seat with light film of silicon grease. Place the seal retainer cap on a horizontal surface and place new seal seat in retainer cap. Be certain that your fingers or thumbs do not come into contact with seal seat face. Use a clean rag for protection of seat face when pressing seat into seal retainer cap. After seat is pressed into the cap, check on back side of cap to be sure that seat is properly seated against the cap shoulder.

Apply a light film of silicon grease to shaft. Slide sleeve gasket on shaft and butt shoulder, slide sleeve on shaft and butt to sleeve gasket. Chamfered end of sleeve should point toward impeller end of shaft. Slide seal retainer cap with seat pressed into cap on shaft as far back as it will go. Place cap gasket on seal retainer cap.

Lubricate i.d. of rubber on rotating seal with silicon grease and slide on shaft sleeve, carbon washer facing seal seat. Push seal all the way back until it gently touches the seal seat. Slide the seal spring over the sleeve followed by the spring retainer with raised portion toward the spring. Place impeller spacer on shaft so it butts the seal sleeve. Assemble casing to frame and firmly tighten casing bolts alternately.

Reassemble impeller, after impeller bolt has been firmly tightened, insert the two side bolts through the seal retainer cap and cap gasket and slide seal retainer toward casing. Start the two side bolts and take bolts up evenly. When seal retainer comes into contact with casing insert top & bottom bolts and tighten all four bolts alternately. Replace external recirculation line if one is provided. Reassemble suction cover with new O ring. Connect suction and discharge flange. Firmly tighten all flange and suction cover bolts.

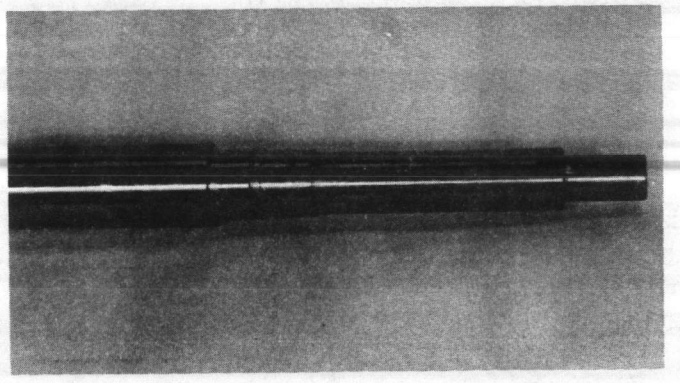

MAINTENANCE AND SERVICING

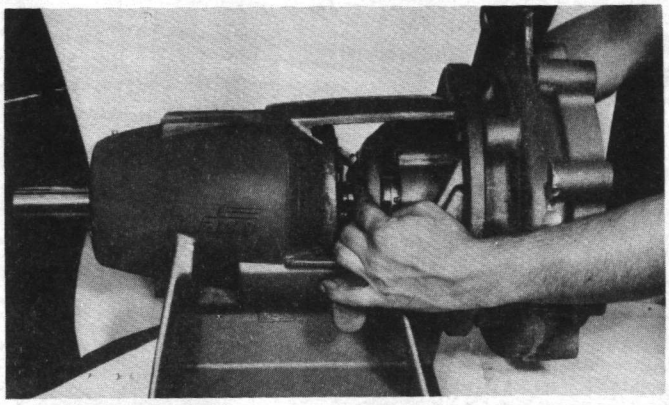

3. REPLACING PACKING

Replacement Parts Required
Packing Set

Remove packing gland nuts and slide gland back as far as it will go. Remove old packing rings.

Pump numbers, quantity of packing ring and packing ring sizes are as follows:

Pump Number	Quantity of Ring	Ring Size I.D. O.D. Thickness
1205 (1-1/4-5), 1206 (1-1/4-6), 1505 (1-1/2-5), 1506 (1-1/2-6), 1508 (1-1/2-8),	4	1-1/4 x 1-3/4 x 3/8
2006 (2-6)	4	1-1/4 x 1-3/4 x 3/8
2505 (2-1/2-5), 2506 (2-1/2-6), 3005 (3-5) 3006 (3-6)	4	1-1/4 x 1-3/4 x 3/8
2008 (2-8), 2508 (2-1/2-8), 2510 (2-1/2-10)	5	1-1/4 x 2 x 3/8
3008 (3-8), 4006 (4-6)	5	1-1/4 x 2 x 3/8
3010 (3-10), 4008 (4-8), 4010 (4-10) 4012 (4-12),	6	1-1/2 x 2-1/4 x 3/8
5008 (5-8), 5010 (5-10)	6	1-1/2 x 2-1/4 x 3/8
5012 (5-12), 6010 (6-10)	6	1-1/2 x 2-1/4 x 3/8
6012 (6-12)	5	2 x 3 x 1/2

If a solid ring or a length of packing is used be certain that all rings be cut diagonally. You are now ready to start reassembling packing rings.

Open first ring sufficiently to place around shaft with opening at the top of packing chamber. Push into chamber with packing gland. Pull gland back and insert another ring with opening on right hand side and push into chamber with packing gland. Repeat this procedure with opening at bottom and left hand side until all rings have been installed.

Slide gland squarely up to last packing ring and hand tighten nuts. (Do not use a wrench at this time). Open suction and discharge valves. If packing does not leak, loosen nuts until there is a slight leak. If packing leaks excessively tighten nuts with a wrench until there is a slight leak, pump may now be started.

Normal leakage for packed pumps is three (3) to seven (7) drops per minute.

During running in period of approximately 30 to 60 minutes take up on nuts one half (1/2) turn every 5 minutes, or until at the end of the running in period you are getting normal leakage of three (3) to seven (7) drops per minute. While tightening nuts make certain that gland is being pulled up evenly.

INSTALLATION OF EXTERNAL CIRCULATION TUBE

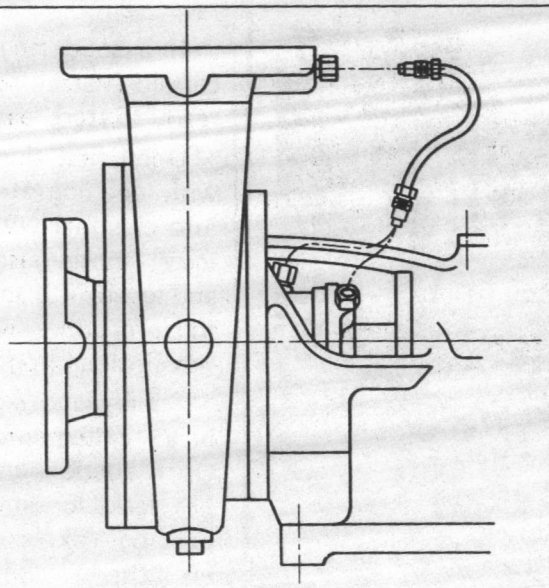

IMPORTANT

Before filling system with water, assemble external circulation tube to pump casing as follows:

1. Screw nut into body until hand tight.
2. With a wrench continue tightening for about one and one-half full additional turns. (It is not necessary to tighten nut all the way down)

INSTALLATION OF PUROCELL FILTER

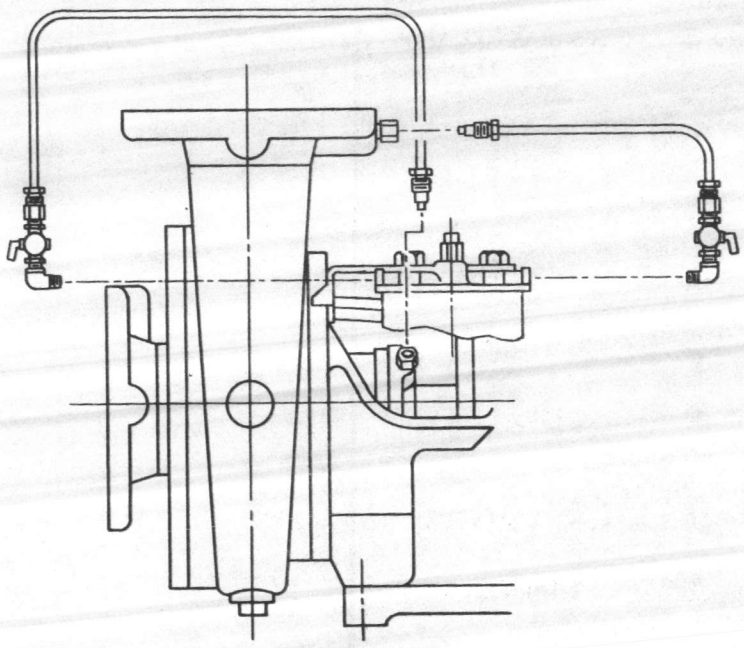

IMPORTANT

1. Attach Filter to the pump by loosening the top bolt on the frame and casing and slip bracket under bolt and tighten.
2. If Recirculating line is installed — remove from frame and insert this end into inlet of Filter.
3. Attach line from outlet of the filter to seal retainer cap.

Taco, Inc. 1160 Cranston Street, Cranston, Rhode Island 02920 Telephone: (401) 942-8000 Telex: 92-7627

Litho in U.S.A.

Taco (Canada) Ltd. 3090 Lenworth Drive, Mississauga, Ontario Telephone: (416) 625-2160 Telex: 06-961179

Taco

REPLACEMENT PARTS LIST

NUMBER

PL300-2.3

Effective: June 1, 1983
Supersedes: PL300-2.3
dated 2/1/81

FOR FOLLOWING MODEL NUMBERS:

BM or CC: 2 - 8 2½ - 8 2½ - 10 3 - 8 & 4 - 6
BM or CC: 2008 2010 2012 2508 2510 3008 & 4006
SB or BB: 2008 2010 2012 2508 2510 3008 & 4006

WHEN SELECTING AND ORDERING PARTS, ALWAYS REFER TO SERIAL NUMBER ON NAME PLATE

—Example—

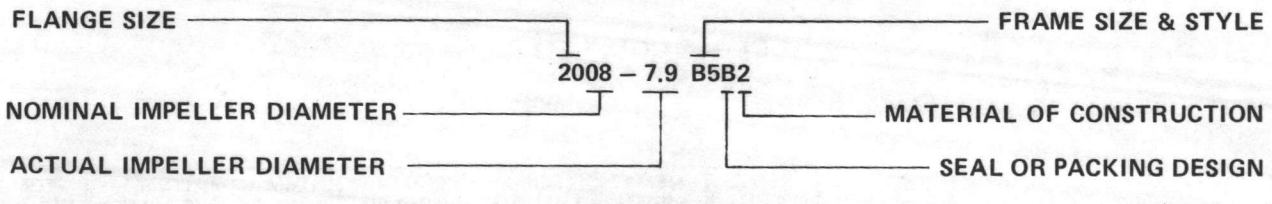

BASIC PARTS

FILTER KIT (900-1)
Repl. Cartridge for above (900-439)
Filter Cap Gasket (900-783)
All items above not shown on this sheet.

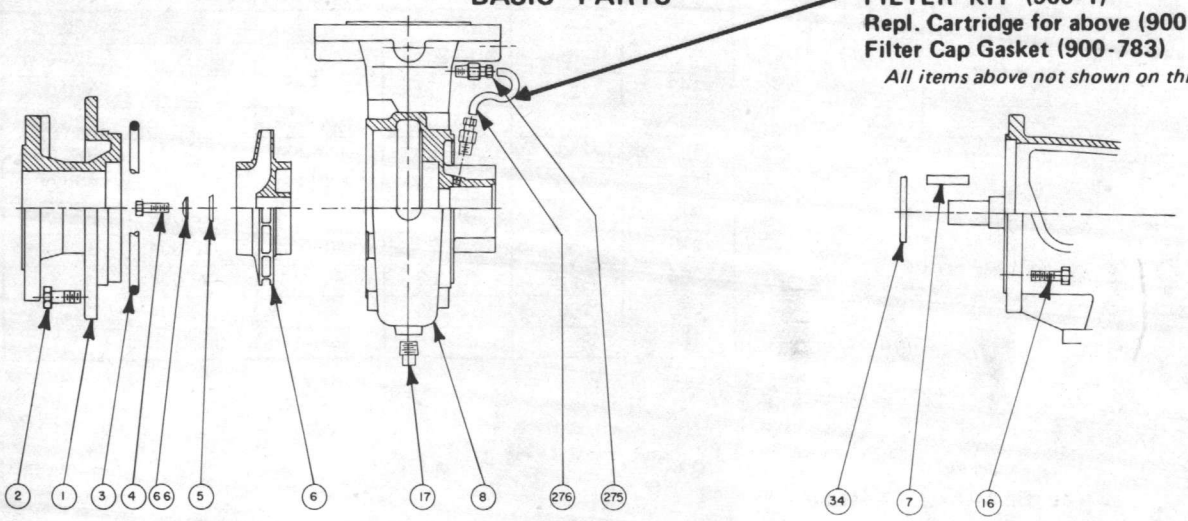

Item No.	No. Reqd.	DESCRIPTION	PART NO. PER PUMP SIZE						REMARKS
			2 - 8 2008	2 - 12 2012	2½ - 8 2508	2½ - 10 2510	3 - 8 3008	4 - 6 4006	
1	1	Suction Cover	920-003	884-003	928-003	922-003	934-003	938-003	Add 'B' for Brz.
2	8	Suction Cover Bolts	10-216	10-211	10-216	10-211	10-216	10-230	
3	1	Suction Cover 'O' Ring	912-005	868-004	912-005	862-005	912-005	918-005	
4	1	Impeller Bolt (SS)	10-257	10-259	10-257	10-257	10-257	10-257	3/8-16x11/2 SS
5	1	Impeller Washer	926-004	926-004	926-004	926-004	926-004	926-004	
6	1	Impeller	920-002	884-002	928-002	922-002	934-005	938-002	Add 'B' for Brz.
7	1	Impeller Key (SS)	13-104A	13-105A	13-104A	13-104A	13-104A	13-104A	
8	1	Casing	920-001	884-001	928-001	922-001	934-001	938-001	Add 'B' for Brz.
16	4	Casing Bolt	10-201	10-201	10-201	10-201	10-201	10-201	3/8-16x1-1/8
17	1	Drain Plug	16-102	16-104	16-102	16-102	16-102	16-102	3/8 NPT
34	1	Slinger Ring	900-044	900-044	900-044	900-044	900-044	900-044	
66	1	Belleville Washer	900-053	900-053	900-053	900-053	900-053	900-053	
222	1	Fitting	900-566	900-566	900-566	900-566	900-566	900-566	
275	2	Fitting	900-798	900-798	900-798	900-798	900-798	900-798	
276	1	Tube	900-728	900-728	900-728	900-728	900-728	900-728	

(1) Throttle Bushing (Item 10), found in Seal Section, must be ordered with each casing.

Taco, Inc. 1160 Cranston Street, Cranston, Rhode Island 02920 Telephone: (401) 942-8000 Telex: 92-7627

Litho in U.S.A.

Taco (Canada) Ltd. 3090 Lenworth Drive, Mississauga, Ontario Telephone: (416) 625-2160 Telex: 06-961179

FRAME SIZE & STYLE – 0000-00-XX00

B1 BALL BEARING DESIGN: Update pump with 840-124RP Complete Frame Assembly. Please furnish all nameplate data to insure proper updated nameplate.

B2 SLEEVE BEARING DESIGN: Update pump with 840-124RP Complete Frame Assembly. Please furnish all nameplate data to insure proper updated nameplate.

B3 SLEEVE BEARING DESIGN: Update pump with 840-124RP Complete Frame Assembly. Please furnish all nameplate data to insure proper updated nameplate.

B6 SLEEVE BEARING DESIGN: Update pump with 840-124RP Complete Frame Assembly. Please furnish all nameplate data to insure proper updated nameplate.

B4 CLOSE COUPLED (CC)

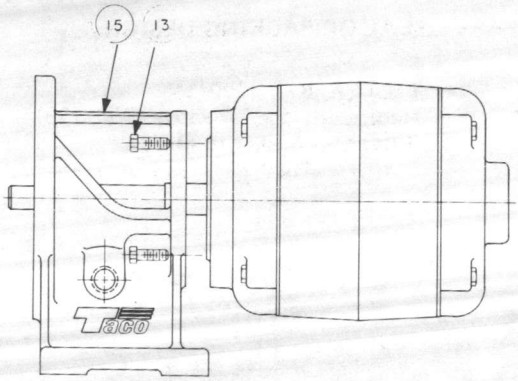

NEMA FRAME Size "T"	NEMA FRAME Size "U"	ITEM 13 FR. BOLT Part No.	ITEM 15 PUMP FR. 1750 "T"	ITEM 15 PUMP FR. 3450 "T"	ITEM 15 PUMP FR. 1750 "U"	ITEM 15 PUMP FR. 3450 "U"
	48	10-201			920-004	920-004
	56	10-201			920-004	920-004
143	182	10-201			920-004	920-004
145	184	10-201	920-004		920-004	920-004
182	213	10-223	928-004		928-004	928-004
184	215	10-223	928-004		928-004	928-004
213	254	10-223	928-004	928-004	928-004	928-004
215	256	10-223	928-004	928-004	928-004	928-004
254	285	10-223		928-004		900-126
256	286	10-223		928-004		900-126
284		10-223		900-126		

B5 BALL BEARING DESIGN:

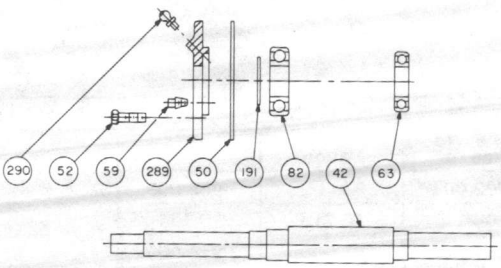

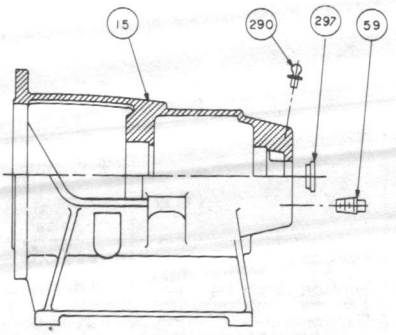

Item No.	No. Req.	DESCRIPTION	PART NO.	REMARKS REMARKS
74	1	Frame Assembly (complete)	840-124RP	
15	1	Frame	840-111	
42	1	Shaft	840-113	Add SS for Stainless Steel
50	1	Bearing Plate Gasket	840-123	
52	4	Bearing Plate Bolt	10-230	3/8 - 16 x 1
59	2	Drain Plug	16-111C	1/8 NPT Brass
63	1	Ball Bearing	840-114	
82	1	Ball Bearing	840-071	
191	1	Retainer Ring	15-105	
289	1	Bearing Cover Plate Assembly	840-120	
290	2	Lubrication Fitting	15-200	
297	1	End Cap	820-368	

SEAL OR PACKING DESIGN – 0000-00-00X0

MECHANICAL SEAL

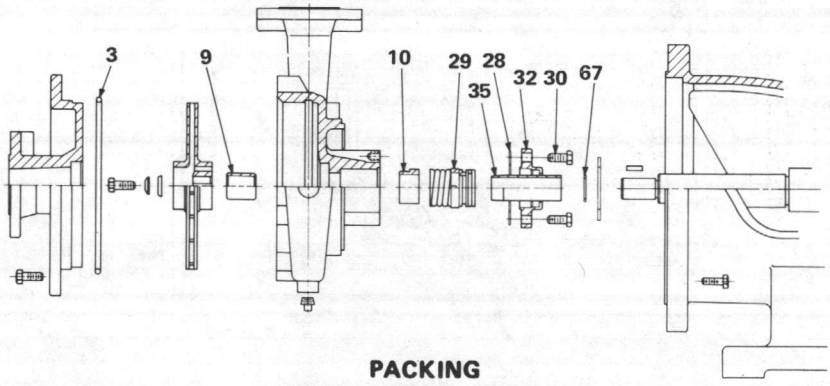

PACKING

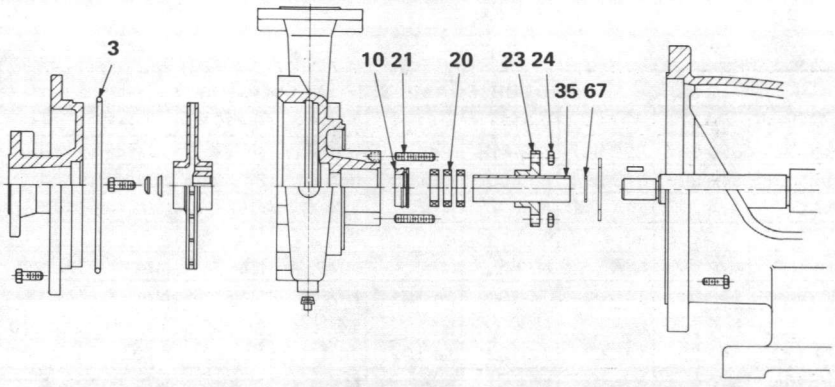

TYPE B STANDARD. TYPE D HI-TEMP. TYPE P PACKED. TYPE E CERAMIC.

Item No.	No. Reqd.	DESCRIPTION	SEAL OR PACKING DESIGN				REMARKS
			Type 'B'	Type 'D'	Type 'P'	Type 'E'	
3	1	'O' Ring	*See Page 1*				
9	1	Impeller Spacer	900-026RP	900-026RP	Not Used	900-026RP	
10	1	Throttle Bushing	920-016	920-016	920-008	920-016	
20	1	Packing Set			900-241RP		
21	2	Studs			900-029		
22	1	Filler Ring (Not shown)	Not Used	Not Used	900-030		
23	1	Gland			920-015		Add 'B' For Bronze
24	2	Hex Nuts			12-129		3/8 – 16
28	1	Retainer Cap Gasket	920-014RP	920-014RP		920-014RP	
29	1	Water Seal	900-024RP	900-087RP		900-215RP	
91	1	WATER SEAL KIT	840-128BRP	840-128DRP	Not Used	840-128ERP	Incl. Items No. 28, 29, 35 & 67
30	4	Retainer Cap Bolts	10-208	10-208		10-208	3/8 – 16 x 7/8
32	1	Seal Retainer Cap	920-020	920-020		920-020	
35	1	Sleeve	900-027BRP	900-027BRP	920-006	900-027BRP	
67	1	Sleeve Gasket	920-007RP	920-007RP	920-007RP	920-007RP	

MOTOR PARTS – NOT PART OF SERIAL NUMBER
–Motor Frame Sizes Must be Specified When Ordering Parts Shown Below–

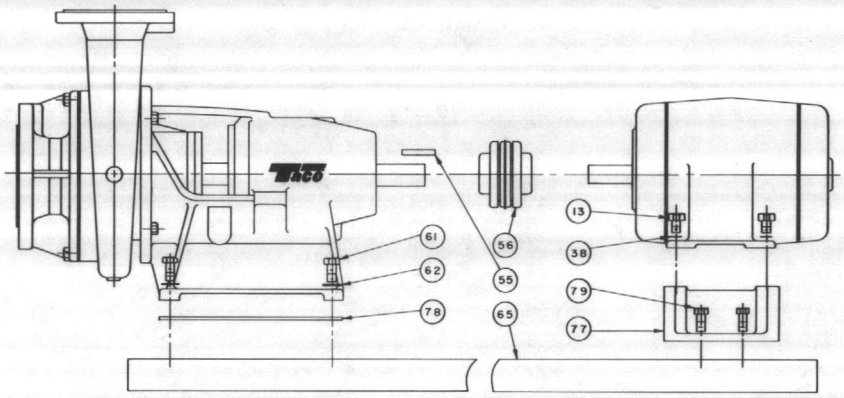

Item No.	No. Reqd.	DESCRIPTION	MOTOR FRAME SIZE (NEMA STD.) 'T'										REMARKS
			143-145T	182T	184T	213T	215T	254T	256T	284T	284TS	286TS	
65	1	Base Plate (1)	820-957	820-957	820-957	840-418	840-418	840-418	840-418	840-419	840-419	840-419	
77	2	Spacer	840-098	840-003	840-004	840-005	840-006	840-041	840-040	N/A	N/A	N/A	
78	2	Frame Spacer	N/A	N/A	N/A	N/A	N/A	N/A	N/A	840-106	840-106	840-106	
56	1	Coupler	900-193	900-206	900-206	900-195	900-195	900-197	900-197	900-538	900-197	900-199	
38	4	Mtr. Lck. Wshr.	14-104	N/A	N/A	N/A	N/A	N/A	N/A	N/A	N/A	N/A	5/16
38	4	Mtr. Lck. Wshr.	N/A	14-101	14-101	14-101	14-101	N/A	N/A	N/A	N/A	N/A	3/8
38	4	Mtr. Lck. Wshr.	N/A	N/A	N/A	N/A	N/A	14-100	14-100	14-100	14-100	14-100	7/16
62	4	Frm. Lck. Wshr.	14-102	14-102	14-102	14-102	14-102	14-102	14-102	14-102	14-102	14-102	1/2
13	4	Mtr. Hx. Hd. Blt.	10-254	N/A	N/A	N/A	N/A	N/A	N/A	N/A	N/A	N/A	5/16-18x1¼
13	4	Mtr. Hx. Hd. Blt.	N/A	10-221	10-221	10-221	10-221	N/A	N/A	N/A	N/A	N/A	3/8-16x1¼
13	4	Mtr. Hx. Hd. Blt.	N/A	N/A	N/A	N/A	N/A	10-209	N/A	N/A	N/A	N/A	7/16-14x1½
13	4	Mtr. Hx. Hd. Blt.	N/A	N/A	N/A	N/A	N/A	N/A	10-202	10-202	10-202	10-202	7/16-14x1¼
61	4	Fr. Hex. Hd. Blt.	10-238	10-238	10-238	10-238	10-238	10-238	10-238	N/A	N/A	N/A	1/2-13x1-5/8
61	4	Fr. Hex. Hd. Blt.	N/A	N/A	N/A	N/A	N/A	N/A	N/A	10-217	10-217	10-217	1/2-13x2½
79	4	Spr. Hx. Hd. Blt.	10-230	10-230	10-230	10-230	10-230	N/A	N/A	N/A	N/A	N/A	3/8-16x1
55	1	Coupler Key	13-100	13-100	13-100	13-100	13-100	13-100	13-100	13-100	13-100	13-100	1/4x1/4x1½
47	1	Coupler Guard	820-796	820-796	820-796	820-796	820-796	820-796	820-796	820-796	820-796	820-796	
48	4	CG. RdHd. Scw.	10-400	10-400	10-400	10-400	10-400	10-400	10-400	10-400	10-400	10-400	1/4-20x3/8
111		Coup. Insert	900-512	900-512	900-512	900-513	900-513	900-514	900-514	900-515	900-514	900-515	

(1) Add "A" to base plate number when coupler guard is to be used.

MATERIALS OF CONSTRUCTION – – – 0000-00-000X

DESCRIPTION	1 STANDARD CONSTRUCTION	2 BRONZE FITTED	3 ALL BRONZE	4 ALL IRON	REMARKS
Casing	Iron	Iron	Bronze	Iron	Add Suffix 'B' for Bronze
Suction Cover	Iron	Iron	Bronze	Iron	Add Suffix 'B' for Bronze
Impeller	Iron	Bronze	Bronze	Iron	Add Suffix 'B' for Bronze
Wear Ring	Bronze	Bronze	Bronze		Only When Required
Seal Retainer Cap	Iron	Iron	Bronze	Iron	Add Suffix 'B' for Bronze
Packing Gland	Iron	Iron	Bronze	Iron	Add Suffix 'B' for Bronze
Throttle Bushing	Bronze	Bronze	Bronze	Iron	Add Suffix 'C' for Iron
Sleeve	Stainless Steel	Stainless Steel	Stainless Steel	Stainless Steel	
Shaft	Steel	Steel	Steel	Steel	Add 'SS' for St. Steel

for quality, efficiency, dependability...

WEINMAN

CONDENSATE RETURN AND BOILER FEED UNITS
TYPES ACV, ACKV, AEV, AEKV, ADV and AFV

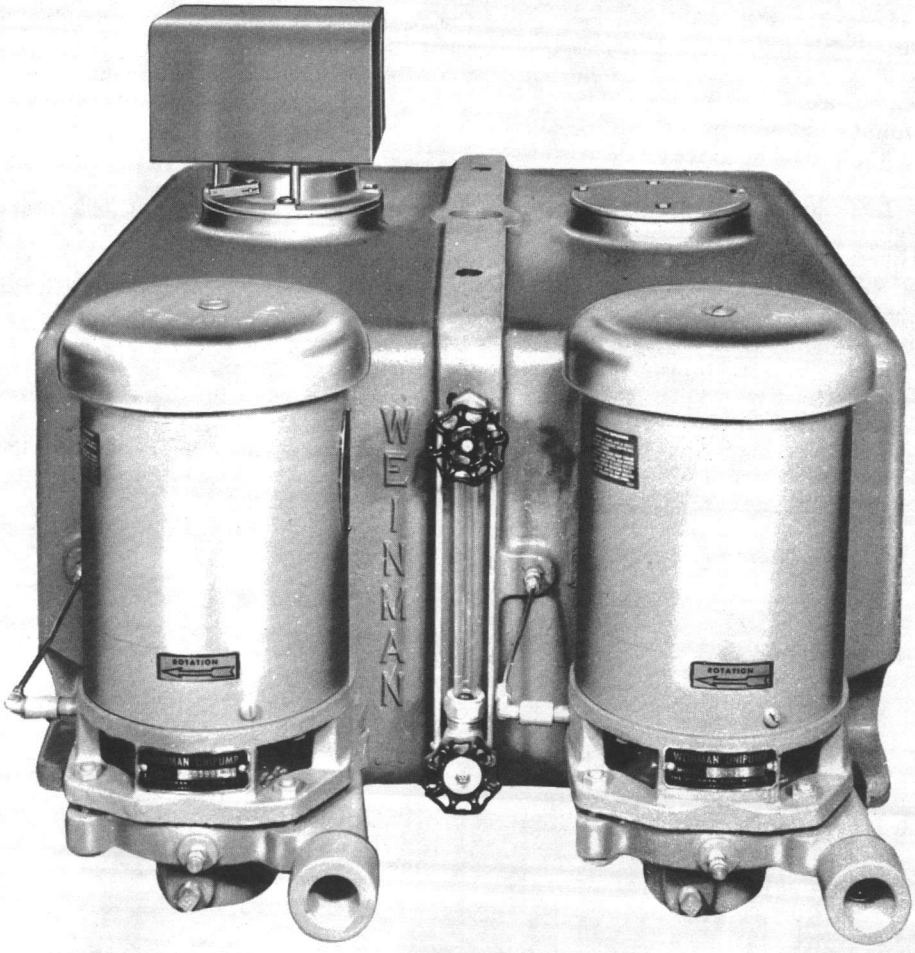

INSTALLATION and OPERATING
INSTRUCTIONS

These instructions are important. Please read them thoroughly before installing your Weinman Unit. Quiet, trouble-free operation depends on proper installation and operation procedure. By carefully following the procedure outlined you will insure top performance from your Weinman equipment over a long period of time.

Keep these instructions on hand for future reference, along with the enclosed parts list which will be of help to you should you need replacement parts.

Mueller Pump
AERMOTOR-MIDLAND-WEINMAN
A MUELLER COMPANY
P.O. Box 1364 Commerce & Exchange
Conway, Arkansas 72032 501-329-9811

WEINMAN
INSTALLATION and OPERATING INSTRUCTIONS
for CONDENSATE RETURN and BOILER FEED UNITS
TYPES ACV, ACKV, AEV
AEKV, ADV and AFV

How to install, maintain and operate WEINMAN Condensate Return and Boiler Feed Units

Your Weinman Condensate Return and Boiler Feed Units are precision designed and built with quality materials and fine workmanship to warrant superior performance under the toughest operating conditions. To insure continued successful operation it is essential the following installation, maintenance and operation instructions be followed in every detail.

INSTALLATION

STEP 1: Choose a clean, dry, well ventilated area in which to install your unit. This not only assures proper operation and increased service life, but speeds maintenance.

STEP 2: Install the unit in a position that will permit the condensate to flow by gravity into the receiver. This eliminates the possibility of the return lines becoming moisture laden, thus preventing the system from freeing itself of air.

STEP 3: After installation, be certain the unit is perfectly level. Shim it when necessary to level.

STEP 4: Connect the discharge piping carefully. Be sure that it is supported independently to prevent pipe strain from being transferred to the pump casing. It's good to install a union, gate valve, and check valve in the discharge line.

STEP 5: Hook up the return piping making certain that it slopes slightly toward condensate receiver.

STEP 6: Install the vent piping. Be sure it is open to the atmosphere at all times.

WIRING

Check the motor nameplate for specific wiring requirements. For safe and proper operation, fuses installed in the safety switches and all wiring must conform to recommendations of the National Electrical Code.

PUMP ROTATION

Pump rotation is clockwise as you look down on the pump. Single phase motors are wired so that they rotate clockwise automatically. Three phase motors, however, should be checked carefully for proper rotation prior to operation. To do this:

1. Connect wiring leads to pump motor in the usual manner.
2. Start the motor the first time by just touching the starter button and then stopping the motor immediately. When you do this check the pump shaft for proper clockwise rotation.
3. If pump rotation is counter-clockwise, switch any two of the motor wires to obtain proper rotation.

TYPICAL WIRING DIAGRAMS

FLOAT SWITCH

SINGLE PHASE MANUAL STARTER

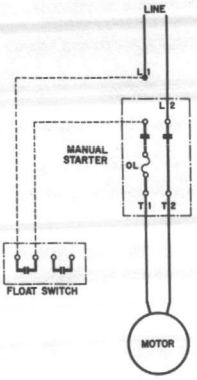

When using manual starter with three position selector switch (Hand-Off-Auto), connect line L1 to "Hand" terminal of switch, and float switch in series to "Auto" terminal and to line L1.

SINGLE PHASE MAGNETIC STARTER

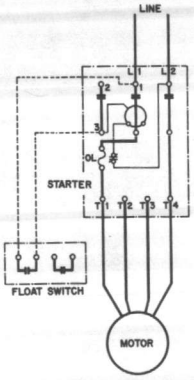

When using magnetic starter with three position selector switch (Hand-Off-Auto), connect float switch to terminals 1 and 2.

For low voltage, connect terminals T1 to T2, and T3 to T4.

For high voltage, connect terminal T2 to T3.

THREE PHASE MAGNETIC STARTER

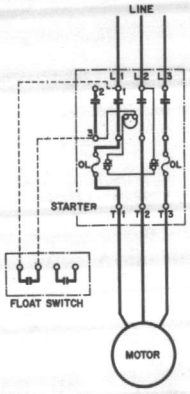

When using magnetic starter with three position selector switch (Hand-Off-Auto), connect float switch to terminals 1 and 2.

MECHANICAL ALTERNATOR

SINGLE PHASE MAGNETIC STARTER

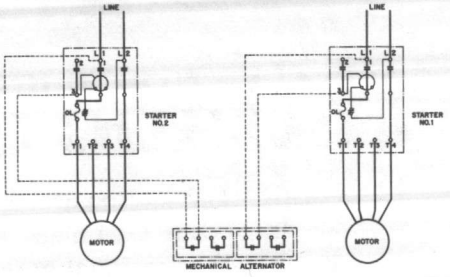

When using magnetic starter with three position selector switch (Hand-Off-Auto), connect alternator to terminals 1 and 2.

For low voltage, connect terminals T1 to T2 and T3 to T4.

For high voltage, connect terminal T2 to T3.

THREE PHASE MAGNETIC STARTER

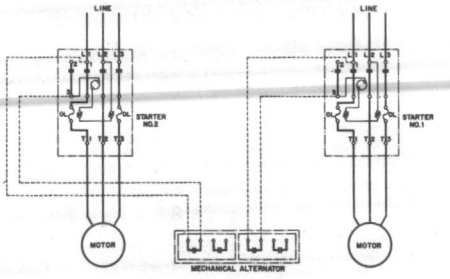

When using magnetic starter with three position selector switch (Hand-Off-Auto), connect alternator to terminals 1 and 2.

LUBRICATION

Under normal condensate service requirements, lubricate motor bearings about once a year. WARNING! EXCESSIVE GREASING DAMAGES BEARINGS JUST AS QUICKLY AS INSUFFICIENT GREASING. It is essential to use a good grade of grease. Any of the following brands are acceptable for Weinman Pumps:

American Oil Company	Amolith No. 2
Cities Service Oil Company	Trojan H2
Humble Oil & Refining Company	Nebula EP No. 2
Shell Oil Company	Alvania No. 2
Sinclair Refining Company	Litholine 2
Texaco Inc.	Multifak 2
Union Oil Company	UNOBA No. 2

OPERATION

Operation of Weinman Condensate Return and Boiler Feed Units is simple and easy, if you observe these rules in keeping them in proper condition.

New or repaired water systems must be flushed for several days to eliminate all impurities and make sure the entire system is clean. This simple precaution will give you years more of maintenance-free service.

Heating systems should be flushed thoroughly at the start of each heating season for the same reason.

To flush your Weinman Unit . . . remove the drain plug at the receiver and drain the system water into the sewer. If the system water remains dirty after flushing . . . operate it for several days, draining the water into the sewer until it becomes clean.

DISASSEMBLY

Whenever it is necessary to repair the motor or replace the mechanical seal, the pump can be removed from its casing quickly and easily without disturbing the piping.

INSTALLING A NEW MECHANICAL SEAL

CAUTION: This seal is a precision product and should be handled accordingly. Be especially careful not to scratch or chip the lapped sealing faces of the washer and floating seat. If reinstalling a used seal, both sealing faces should be relapped.

INSTALLING STATIONARY ELEMENT

The seat must be seated securely in the seat ring with the lapped face out. The *unlapped* face is marked and correctly assembled when shipped. Oil the seat ring with *light oil* and seat it firmly and squarely. If this cannot be done with the fingers, use a sleeve as shown in Fig. 1, inserting the cardboard shipping disc between the sleeve and the lapped face to prevent scratching sealing face.

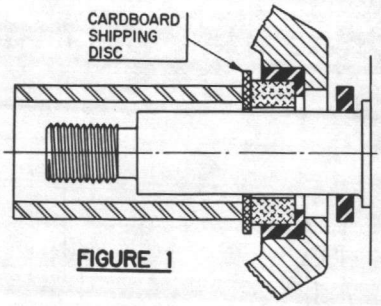

FIGURE 1

INSTALLING ROTATING ELEMENT

Oil shaft with *light oil.* Shaft should be clean and polished smooth. Slide seal body on shaft (washer end *first*) and seat firmly. A sleeve as shown in Fig. 2 will facilitate this operation and prevent the rubber driving ring from pulling out of place as the seal body is slid along the shaft. Assembly of impeller automatically sets seal in proper position.

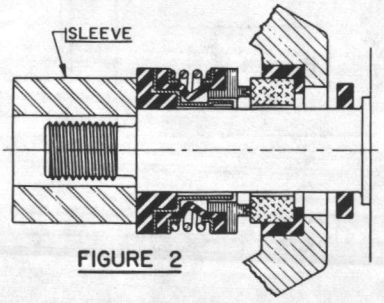

FIGURE 2

Make sure at all times, and particularly before final assembly, that both sealing faces are absolutely clean. Sealing faces should be oiled with clean, light oil.

NEVER RUN THE SEALING FACES DRY. The liquid being handled insures proper lubrication unless other methods of lubrication have been specified. In some cases a short period of operation is required to clear up slight leakage.

REVERSING FLOAT POSITION WHEN USING MECHANICAL ALTERNATOR

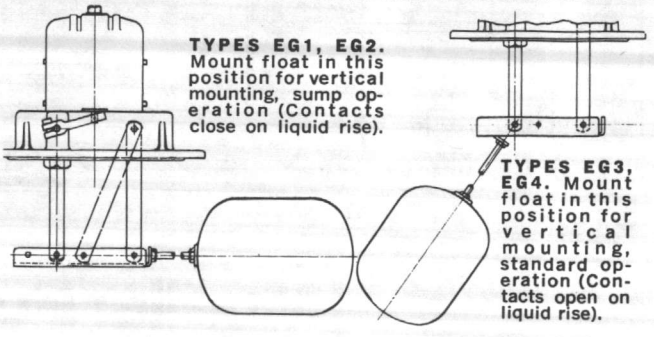

PUMP TROUBLES AND THEIR CAUSES

A. Failure to Pump

1. No water in the receiver
2. Rotation in wrong direction
3. Speed too low
4. Return water too hot
5. Total head too high

B. Overloaded Driving Unit

1. Total head too low
2. Unit misalignment (check for piping strains)

CONDENSATE RETURN UNIT CIRCUIT

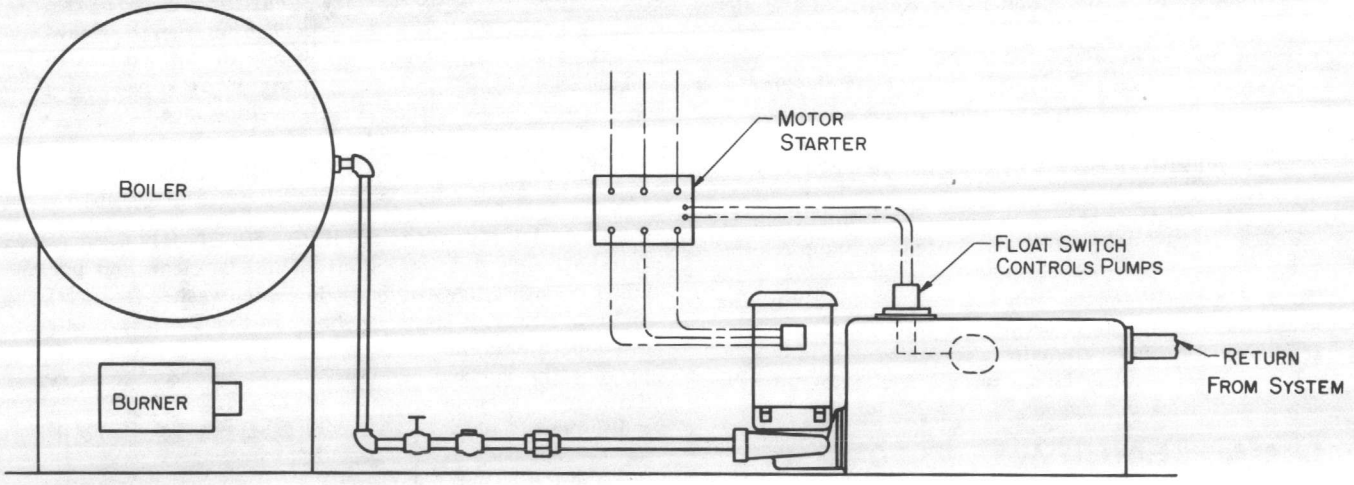

BOILER FEED UNIT CIRCUIT

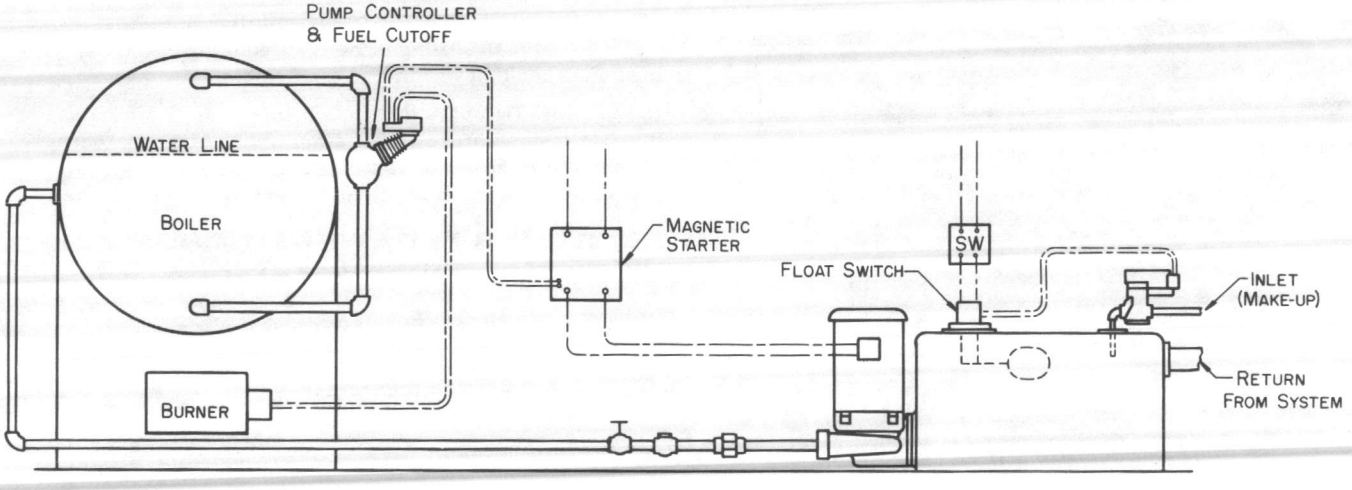

Mueller Pump
AERMOTOR-MIDLAND-WEINMAN
A MUELLER COMPANY
P.O. Box 1364 Commerce & Exchange
Conway, Arkansas 72032 501-329-9811

Printed in U.S.A.

Mueller Pump
AERMOTOR-MIDLAND-WEINMAN
A MUELLER COMPANY
P.O. Box 1364 Commerce & Exchange
Conway, Arkansas 72032 501-329-9811

REPAIR PARTS LIST

TYPES "6 ADV & 6 AFV" VERTICAL CONDENSATE UNIT
CAST IRON RECEIVERS
(With Type 21 Mechanical Shaft Seal)

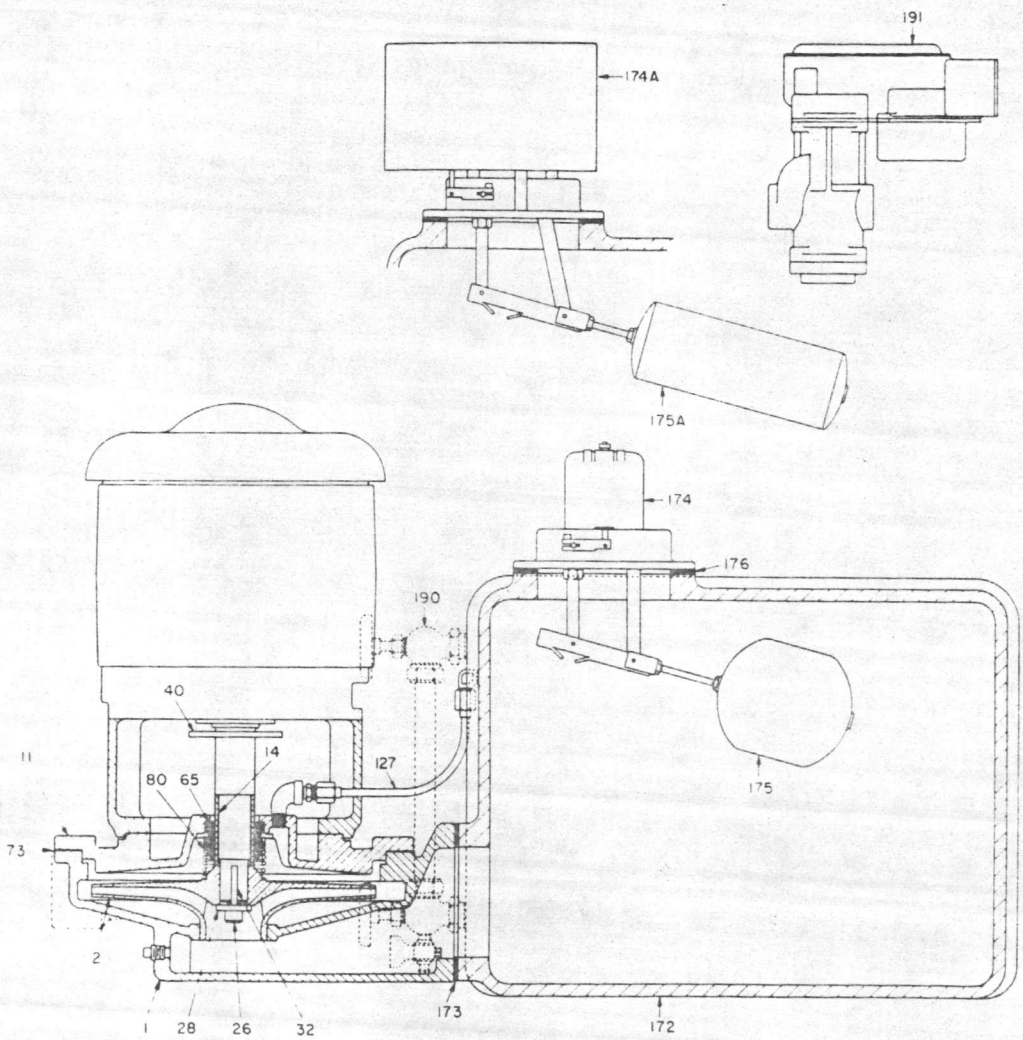

Item No.	Name	Material of Construction (St'd Fitted)
†	CASING	CAST IRON
* 2	IMPELLER	BRONZE
11	CASING COVER	CAST IRON
*14	SHAFT SLEEVE	BRONZE
*26	IMPELLER SCREW	STAINLESS
*28	IMPELLER SCREW WASHER	STAINLESS
*32	IMPELLER KEY	STAINLESS
40	DEFLECTOR (Liquid)	NEOPRENE
† *65	MECHANICAL SHAFT SEAL (Stationary Element)	CERAMIC
*73	CASING GASKET	ASBESTOS
† *80	MECHANICAL SHAFT SEAL (Rotating Element)	CARBON
127	SEAL VENT PIPING	COPPER
172	RECEIVER	CAST IRON
*173	RECEIVER GASKET	RUBBER
174	FLOAT SWITCH	Sq. D. #9037
174A	MECHANICAL ALTERNATOR	Sq. D. #9038
175	FLOAT (Float Switch)	COPPER
175A	FLOAT (Alternator)	COPPER
176	FLOAT SWITCH GASKET	RUBBER
190	WATER GAUGE	BRASS
191	MAKE-UP VALVE (When Specified)	McDonnell #101

* FOR DOMESTIC SERVICE WE RECOMMEND THESE PARTS BE CARRIED IN STOCK AS SPARES.

† FURNISHED ONLY IN PAIRS AS COMPLETE UNIT.

WHEN WRITING THE FACTORY REGARDING YOUR PUMP – ALWAYS INCLUDE SERIAL NUMBER

Supersedes March 26, 1962 Issue

Taco **Instruction Sheet** 202-001

Heat Exchangers

INSTALLATION

1. Allow sufficient clearance for removal of tube bundle.
2. After initial start and run at operating temperatures and pressures, shut down and tighten head bolts.
3. Make certain that tubing is full of water before introducing steam or hot water into shell, otherwise flashing or noise may occur.

CLEANING

Shell and tube bundle should be flushed out periodically. If cleaning is necessary, remove head and bundle to clean inside of shell and outside of tubes. Replace gaskets if necessary.

If unit is installed in a hard water area, inside of tubing can be cleaned as follows: –

1. Break water connections and plug bottom opening.
2. Fill the tubes with a solution of 1 part muriatic acid to 10 parts of water and allow to stand for 2 hours:
   CAUTION: A longer period may cause damage to the copper tubing.
3. Drain off and flush **thoroughly** with clean water.
4. Re-assemble unit.

NOTE

Commercially available cleaners may also be used.

REPLACEMENT PARTS

When ordering replacement parts specify

1) Complete Model Number
2) Date of Manufacture
3) Special Materials if Required

Normally, the only replacement parts required would be:

1 — Tube Bundle
1 — Set of Gaskets

NOTE: When ordering replacement tube bundles care must be take to insure correct construction and proper materials. **Units** manufactured prior to 1974 should have the prefix RUX.

Example: A replacement bundle for a B10212-L built in 1970 would be a RUX10212-L.

Replacement heads are also available if required.

Quality Through Design — COMPARE.

TACO, INC. 1160 Cranston St., Cranston, RI 02920 (401) 942-8000 Telex: 92-7627
TACO (Canada) Ltd. 3090 Lenworth Drive, Mississauga, Ontario, Canada Telex: 06-961179

Printed in U.S.A.
Copyright © 1983
TACO, INC.

INSTRUCTION SHEET

NUMBER
IS-400-1.1(281)

Effective: March 1, 1981
Supersedes: IS400-2-1
dated 7/30/76

AIR CONTROL

1 — Select proper size based on flow (GPM) thru System

Taco Air Control Less Strainer	*Maximum Flow GPM*	*Taco Air Control With Strainer*
AC2	80	AC2F
AC25	130	AC25F
AC3	190	AC3F
AC4	330	AC4F
AC5	550	AC5F
AC6	900	AC6F
AC8	1500	AC8F
AC10	2600	AC10F
AC12	3400	AC12F
AC14	4700	AC14F
AC16	6000	AC16F
AC18	8000	AC18F
AC20	10000	AC20F

2 — Install Air Control in Supply Line between boiler and pump(s) as indicated in Diagram on reverse side.

3 — Install Expansion Tank (s) as close to Air Control as possible with horizontal pipe (if any) pitching up to tank.

4 — If a shutoff valve is installed in Expansion Tank line, use a Gate Valve and make certain it is fully open when system is in operation.

5 — A connection for a Vent is provided at the top of the Air Control.

When the system is first filled, all you have to do is Vent heating units and high points if necessary for quick filling. Thereafter, any entrained air is separated continuously as water is pumped thru the Air Control.

Taco, Inc. 1160 Cranston Street, Cranston, Rhode Island 02920 Telephone: (401) 942-8000 Telex: 92-7627
Litho in U.S.A.
Taco (Canada) Ltd. 3090 Lenworth Drive, Mississauga, Ontario Telephone: (416) 625-2160 Telex: 06-961179

AIR CONTROL

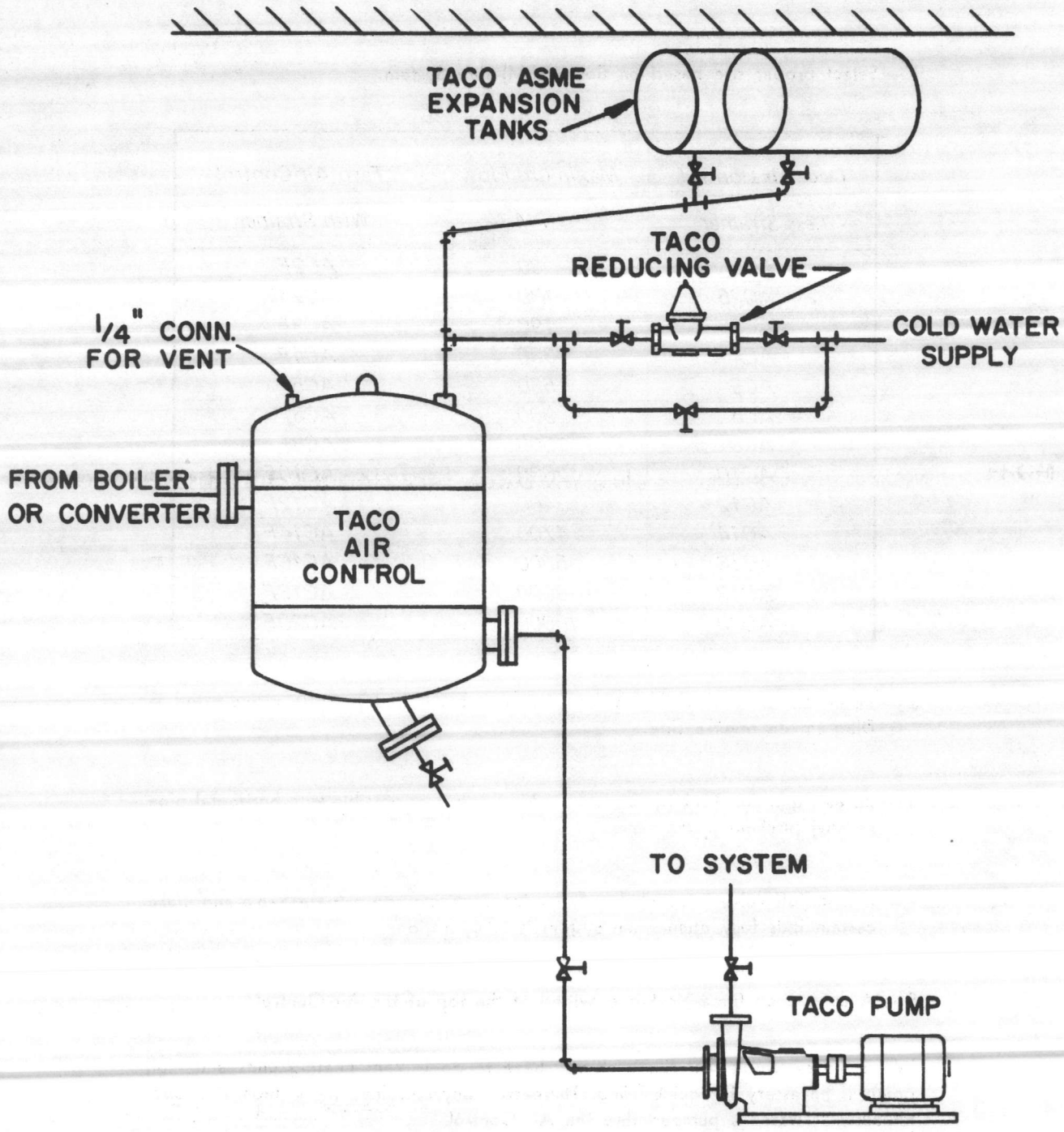
TACO ASME
EXPANSION
TANKS
TACO
REDUCING VALVE
COLD WATER
SUPPLY
1/4" CONN.
FOR VENT
FROM BOILER
OR CONVERTER
TACO
AIR
CONTROL
TO SYSTEM
TACO PUMP

Taco	INSTRUCTION SHEET
NUMBER **IS-100-2.2A**	Effective: May 1, 1983 Supersedes: IS100-2.2A dated 8/1/81

TACO REDUCING VALVE PRESSURE REGULATORS

INSTRUCTIONS FOR INSTALLING

INSTALLATION DIAGRAM

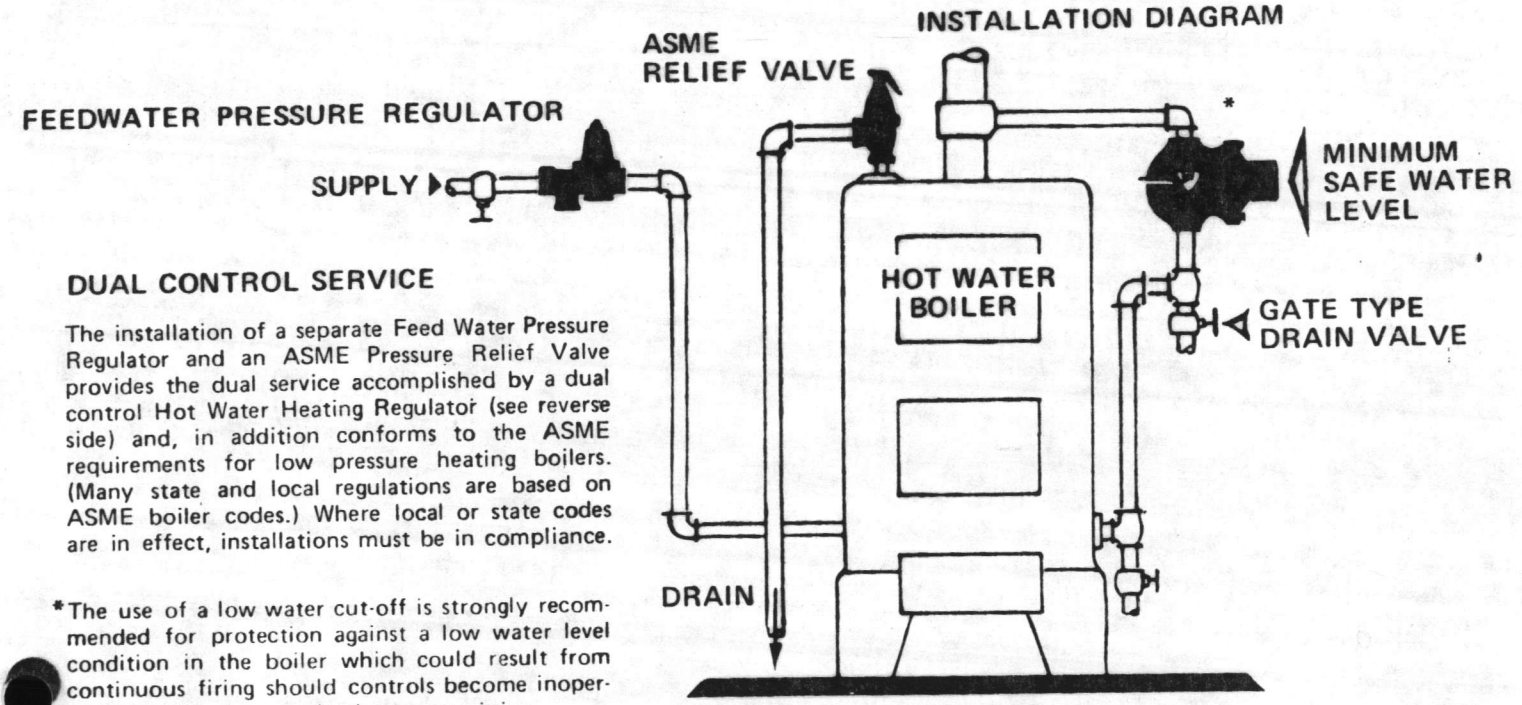

DUAL CONTROL SERVICE

The installation of a separate Feed Water Pressure Regulator and an ASME Pressure Relief Valve provides the dual service accomplished by a dual control Hot Water Heating Regulator (see reverse side) and, in addition conforms to the ASME requirements for low pressure heating boilers. (Many state and local regulations are based on ASME boiler codes.) Where local or state codes are in effect, installations must be in compliance.

*The use of a low water cut-off is strongly recommended for protection against a low water level condition in the boiler which could result from continuous firing should controls become inoperative or a break occur in the return piping.

FEED WATER PRESSURE REGULATORS

These regulators must be installed in the cold water supply line to the boiler and in a horizontal position. When piping is ready to receive the regulator, flush out the supply pipe to clear it of chips scale, dirt, etc. before installing regulator. Install regulator with the supply line connected to the inlet. Install a shut-off valve ahead of the regulator. Regulator is set to feed water at approximately 15 lbs. pressure. To readjust regulator, follow instruction No. 7 on reverse side of this sheet. These regulators have a strainer screen which should be removed and cleaned at least twice a year.

SERIES WITH FAST FILL AND PURGE LEVER

These valves are equipped with a unique and simple "fast fill and purge lever" . . . which permits rapid filling of the system . . . and sustained flow for air purging.

This advanced design incorporates a removable "push" rod which is actuated by the position of the "purge lever." When the lever is raised to the vertical position, it presses the "push" rod down which manually forces the valve wide open for maximum flow. Returning the lever to its normal position releases tension on the rod permitting the valve to maintain normal pressure in the system automatically.

*LOW WATER CUT-OFF

Install a low water cut-off so that the raised line cast on float chamber body is on a level with the top of the boiler. Top of switch box should be reasonably level. Piping to the top and bottom float chamber connections should conform to that shown on installation diagram. Keep the float chamber clean by periodically opening the valve below the float chamber to flush out mud and sediment. Do this at least once each month.

IMPORTANT:

When water main pressure exceeds 100 lbs. or is variable, a domestic service type water pressure reducing valve should also be installed in addition to this feed valve regulator. This reduces the pressure for accurate, longer life feed valve performance, as well as providing quiet, economical service pressure to the domestic fixtures.

Taco, Inc. 1160 Cranston Street, Cranston, Rhode Island 02920 Telephone: (401) 942-8000 Telex: 92-7627

Litho in U.S.A.

Taco (Canada) Ltd. 3090 Lenworth Drive, Mississauga, Ontario Telephone: (416) 625-2160 Telex: 06-961179

TACO HOT WATER
HEATING DUAL CONTROLS

INSTRUCTIONS FOR INSTALLING

1. These TACO DUAL CONTROLS must be installed in the cold water supply line to the boiler and in a horizontal position above the top of the boiler as shown on diagram.

2. When the piping is ready to receive the Regulator, flush out the supply pipe to clear it of chips, scale, dirt, etc. before installing the Regulator.

3. Install the "Regulator" with the supply line connected to the inlet. Install a shut-off valve ahead of the Regulator.

4. Connect a pipe from the "DRAIN" tapping in the relief valve to above some convenient open drain such as a floor drain or set tubs. Always obey local regulations.

   Do not install a valve of any kind in this line. This drain must always pitch down from the regulator. No portion of the drain line should be above the regulator. Drain pipe must not be smaller than the drain tapping provided. The relief valve is non-adjustable and set to relieve at 30 lbs.

INSTALLATION DIAGRAM

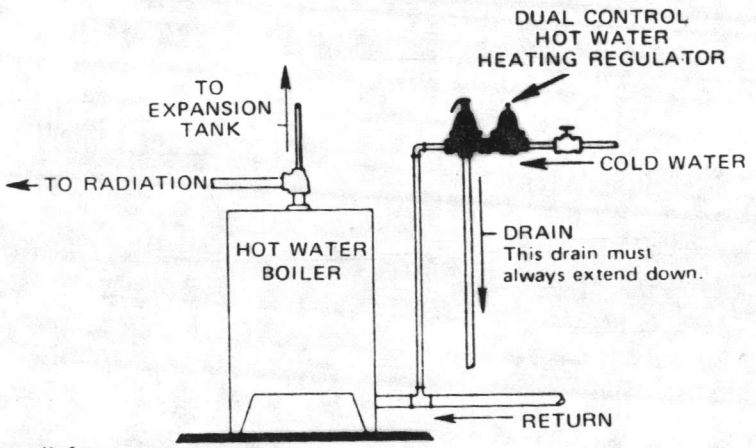

IMPORTANT
Please Note Footnote at Bottom of Reverse Side of This Sheet

5. To fill the system, open the shut-off valve ahead of the Regulator. This valve must always be kept open when the system is in operation. Water will flow into the system until it is full and under pressure.

6. The pressure reducing valve of the Regulator is set to deliver water to the boiler at approximately 15 lbs. pressure. This pressure is sufficient for a 3-story building.

7. To reset the reducing valve for higher pressure (when the pressure is not sufficient to lift the water to highest radiation), calculate the number of feet from the regulator to the top of highest radiation. Multiply this by .43 and add 3 lbs. This will give the pressure needed to raise the water to the highest radiator and keep it under pressure — loosen lock nut. Turn adjusting screw clockwise slowly until the gauge indicates the pressure calculated. Then lock adjustment.

8. The regulator screen should be cleaned at beginning of each heating season.

9. The air cushion tank sometimes becomes filled with water (waterlogged). This is usually indicated by dripping of the relief valve when the burner is running. To recharge with air, close gate valve between tank and system and open gate valve in drain pipe. Allow tank to completely drain (this requires from 10 to 15 minutes), then close drain valve and open valve between tank and system.

~~45 321 6.3.13~~ Sheet 1 of 12

02695 - 1.4.1 fd 2.5.7 change .0005

Shuntflo – Digital/Analog Output or Direct Reading Axial-Turbine Meter for Steam, Gas or Air

Item #

BIF Shuntflo meters are found wherever accurate records must be kept of steam, air or gas production or usage. The Series 400 Shuntflo is a totalizing meter designed to measure the flow of steam, air or gas up to 300 psig and 750°F. Self-contained and self-operating, it requires no mercury, pressure piping, or compressed air.

For remote reading or computer interfacing, a digital/analog output signal model is available with 4-20 mAdc analog signals or 0-20 (nominal) pulse per second signals.

No power is required except at the remote receiver.

Features/Benefits

Wide Range – Each meter over 2" will register over a flow of 10:1. Meter has an overload capability allowing it to register accurately at rates up to 150% of rated capacity on steam service. Overloads of up to 200% can be handled for up to ten minutes duration once every 12 hours.

Direct Reading Counters – Counter gearing is selected such that readings can be made directly in pounds, kilograms, cubic feet, etc. . . . without having to apply correction factors.

On Site Performance Check – By utilizing simple manometry, each Shuntflo meter can be checked without removing it from the pipe line; no expensive provers are required.

High accuracy – Accuracies of ±2% of actual flow can be achieved – dependent upon the individual application.

No Stuffing Box – The utilization of a magnetic coupling enables the user to remove counter box without shutting down the flow. It also eliminates a potential leak problem.

No external power required – Requires no compressed air, or electricity for normal operation.

Calibration – Each Shuntflo Meter is individually tested and calibrated for the customer's specific conditions.

Easy Installation

This compact meter is easily installed, being mounted directly in and supported by the pipe line. Ruggedly constructed, all parts subject to pressure are of high tensile gray iron, bronze or cast steel.

Interchangeable Orifice Plates – If necessitated by range and/or pressure changes, the internal orifice plate in each Shuntflo may easily be changed so the meter can be utilized for the new set of conditions. Utilization of this feature can in effect yield as high as a 1000:1 range for an individual meter.

Operation

As gas flows through the meter body, a portion of flow is diverted to drive the fan shaft assembly, rotating on a jewel bearing. A second set of blades on the fan shaft, rotating in damping fluid, acts as a damper or governor.

Rotational speed of the shaft is proportional to the rate of flow at all rates within the normal range of the meter. Therefore, the number of turns made by the shaft is a measure of the total flow.

Suitable gearing reduces the rotational speed to a driving magnet in the damping chamber. A counter box, located below the damping chamber contains a following magnet and totalizer.

MODEL # 0402-02-10-1-16-0-1

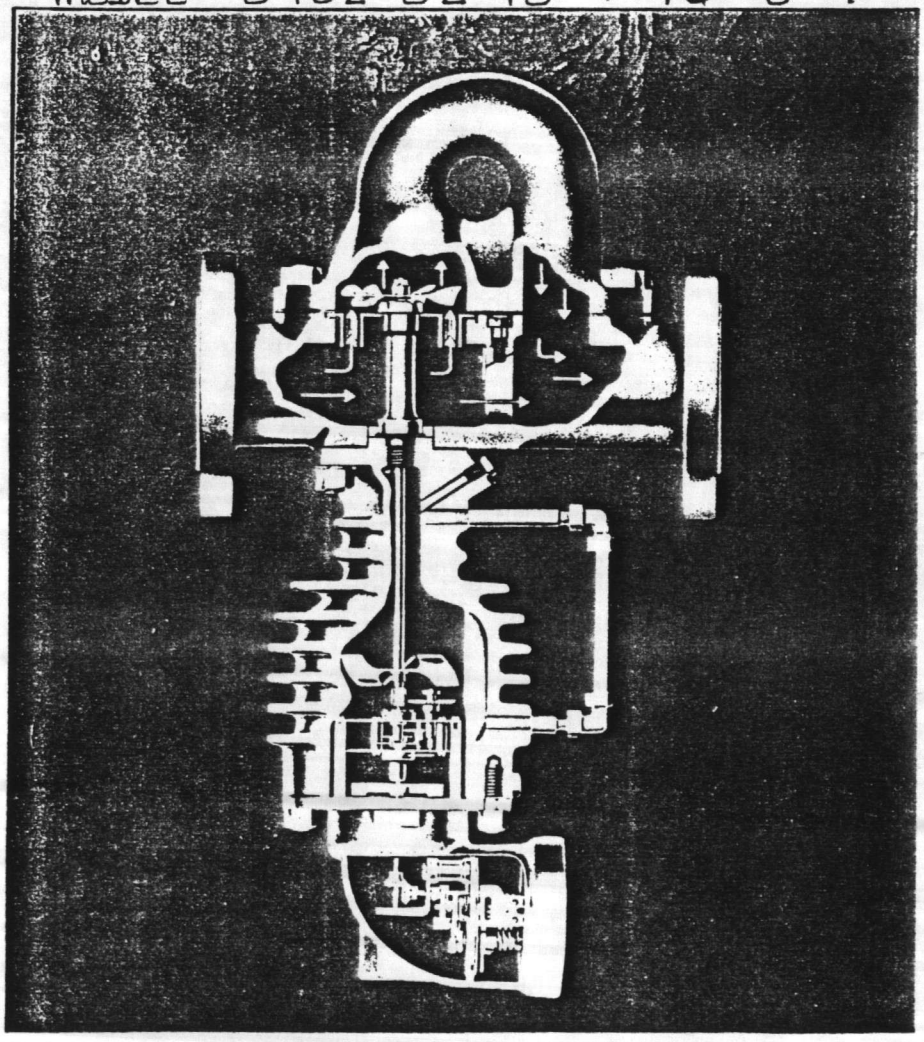

Accessories

Combined Counter and Contactor – This Counter combines the standard register Counter of the Shuntflo with an Electric Contactor to operate a remote totalizer or demand meter.

A shaft, connected to the standard gearing of the counter and geared to give direct or desired ratio of shaft revolutions to revolutions of the large dial hand, imparts a calculated number of impulses to the contactor by means of cams.

It is thus possible to give one contact for each hundred pounds of steam, to operate a totalizer, or to give 67 contacts per interval at a rated capacity, to operate a demand meter.

The Counter-Contactor can be quickly installed without disassembly of the meter proper. The dust-tight aluminum housing is provided with a ½ inch NPT female conduit connection.

Remote Totalizer – Electrically operated, has five digits, is enclosed in a metal case. Wall or flush panel mounted, it is actuated by a contactor device in the Counter.

Pressure Compensating Counter – The Model 406-01 Counter automatically and continuously corrects Shuntflo Meter readings for line pressure variations, thereby giving a more precise accounting of steam, air or gas consumption. Self-contained and self-operated, it can replace the standard Counter on any Shuntflo Meter.

An integrating disc in the Counter is driven by the primary Shuntflo Meter and in turn drives the integrating wheel and related change gears. Automatic correc-

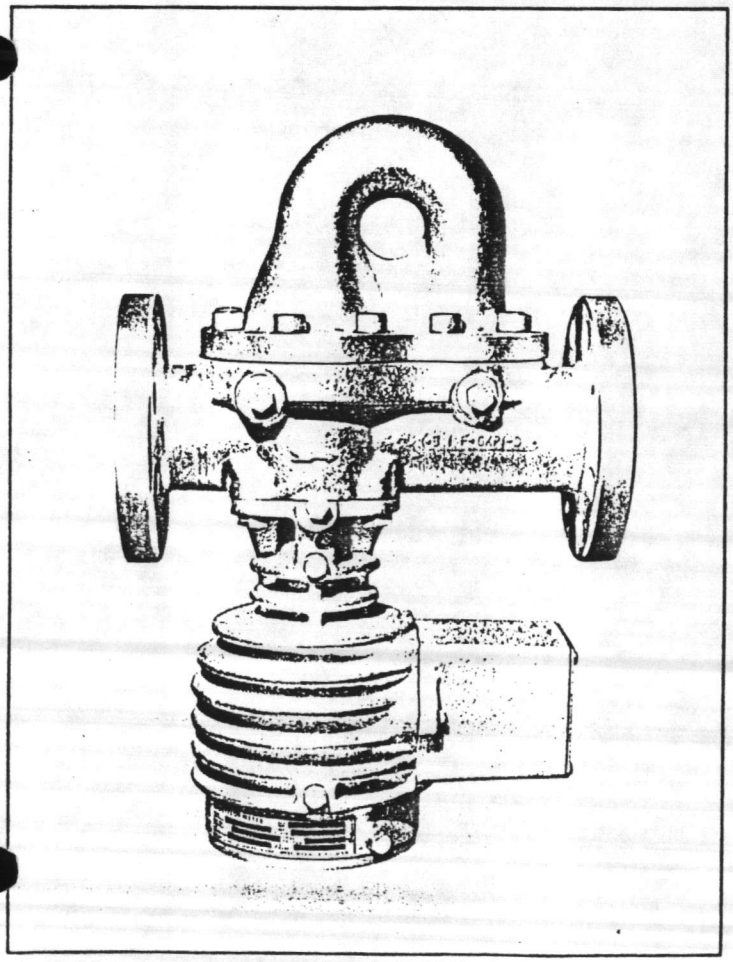

Shuntflo with Digital/Analog Output

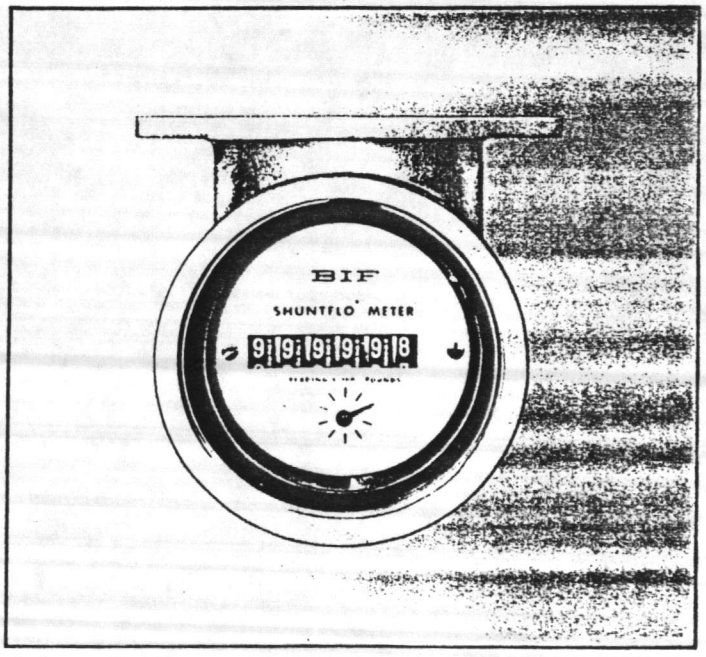

Cyclometer Counter

Open upper limit, or temporary overload range, means that the mechanical totalizer will continue to register accurately at rates up to 200% of rated capacity on steam service.

Overloads of more than 150% of capacity should not exceed 10 minutes duration or once in 12 hours frequency.

Direct reading: Meter is calibrated and counter geared to read directly in pounds of steam, or cu ft of air or gas.

Low maintenance: Meter has a minimum number of moving parts. Disassembly and replacement is easy. In most cases, modification of capacity is affected by removal and replacement of the orifice plate assembly. Counter can be removed or replaced without shutting off the flow. Means for sealing the counter to prevent unauthorized tampering can be provided.

Engineering Specifications

Service: Steam, Air or Gas up to 300 psig or 750°F.

Operating temperature for Digital/Analog Model:

Sensor: -20°F to 450°F
Electronics: -20°F to 200°F

Some of the gases that can readily be metered by the Model 402 Shuntflo:

argon
boron flouride
butadiene
carbon dioxide
carbon monoxide
coke oven gas
ethyl chloride
helium
hydrogen
manufactured gas
methane
natural gas
nitrogen
oxygen
petroleum gas
propane
sewage digester gas
sulphur dioxide
vent gas

Size: The 1 in. cast steel unit is available with threaded ends only.

The 1, (2) 3 and 4 in. sizes have flanged ends (250 lb cast iron ASA Std., 300 lb steel ASA Std. except in one inch size) for horizontal installation.

For line sizes 5 in. and over, a by-pass assembly is used. The assembly includes a 2 in. meter, high tensile iron (or steel) flanged elbows, a main line orifice plate, and 2 in. fittings, but not the companion flanges. Shut-off valves are required. These valves can be furnished by BIF or the customer, but meter must be calibrated at BIF with the valves in place.

Meter body construction for pressures and temperatures in excess of 250 psig or 450°F is cast steel.

Space requirements: For accurate metering, it is necessary to provide straight sections of pipe upstream and downstream from the meter, in addition to the clearance required. The straight sections must be of the same nominal size as the meter, and at least as long as specified in the following table:

METER TYPE AND SIZE	FITTINGS UPSTREAM	PIPE DIAMETERS UPSTREAM	PIPE DIAMETERS DOWNSTREAM
IN-LINE (1, (2) 3, 4 inch)	any	12	6
BY-PASS (5 inch and larger)	one elbow	10	5
	two elbows in same plane	15	5
	two elbows not in same plane	25	5
	three elbows not in same plane	50	5
	gate valve (if not kept wide open)	50	5

Differential: For meters where line pressure is 50 psig or less, differential of standard meters at rated capacity is approximately 20 in. of water.

For line pressure in excess of 50 psig, differential of standard meters at rated capacity is approximately 80 in. of water.

Calibration at other differentials for specific customer conditions can be provided at extra cost.

Loss of pressure, or pressure drop, is normally the same or slightly less than the differential.

Calibration: Each Shuntflo meter is individually tested and calibrated for the customer's specific conditions. Readings are readily corrected for variations from these conditions by use of a special slide calculator furnished with the direction book, or automatically if the meter is equipped with a pressure compensating counter.

Accuracy and range: In-line meters, 1, 2, 3 and 4 inch line size and by-pass meters 5 in. and larger are accurate within ±2% of actual flow over a range of 10:1 for most standard table capacities and pressures.

Accuracy for Digital/Analog Model: ±2% of actual flow over a range of 10:1 plus ±0.02% per degree F above or below 70°F ambient temperature at location of electronic transmitter box.

BIF®
A UNIT OF GENERAL SIGNAL
WEST WARWICK, RI 02893

Shuntflo® Meter
Axial-Turbine Type For Steam, Air, or Gas
Product Series 402

Specification Data

Basic Description

BIF's axial-turbine type Shuntflo meter, Series 402, is a totalizing meter designed to measure the flow of steam, air, or gas. Self-contained and self-operating, it requires no mercury, pressure piping or compressed air. No external power is required except for operation of accessory contacts to remote receivers or for digital output.

This compact meter is easily installed, being mounted directly in and supported by the pipe line. Ruggedly constructed, all parts subject to pressure are of high tensile gray iron, bronze or cast steel.

As the steam, air or gas flows through the meter body, a portion of the flow is diverted to drive the fan shaft assembly, rotating on a jewel bearing. A second set of blades on the fan shaft, rotating in damping fluid, acts as a damper or governor. Rotational speed of the shaft is proportional to the rate of flow at all rates within the normal range of the meter. Therefore, the number of turns made by the shaft is a measure of the total flow.

Suitable gearing reduces the rotational speed to a driving magnet in the damping chamber.

A counter box, located below the damping chamber contains a following magnet, a six-digit counter and dial, plus necessary gearing to cause the counter to register the desired units of flow.

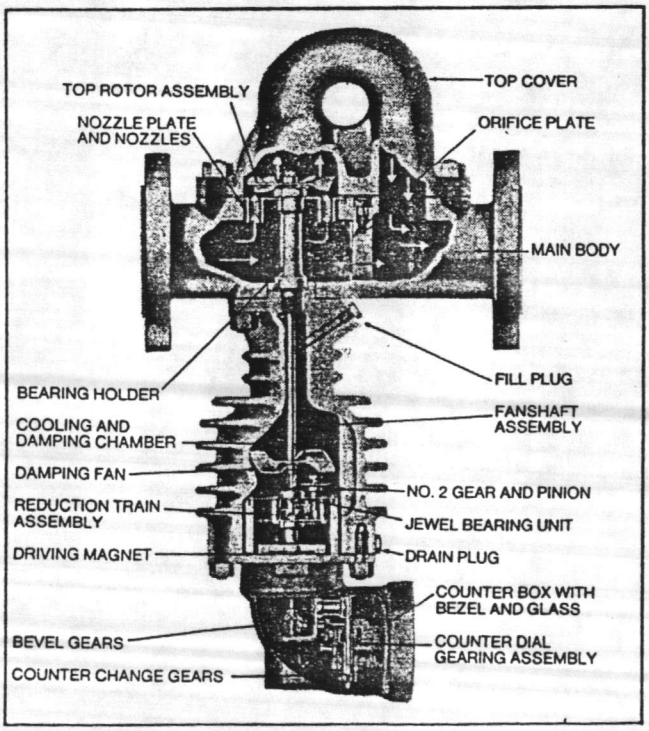

Fig. 1 – Cross section of Shuntflo Meter

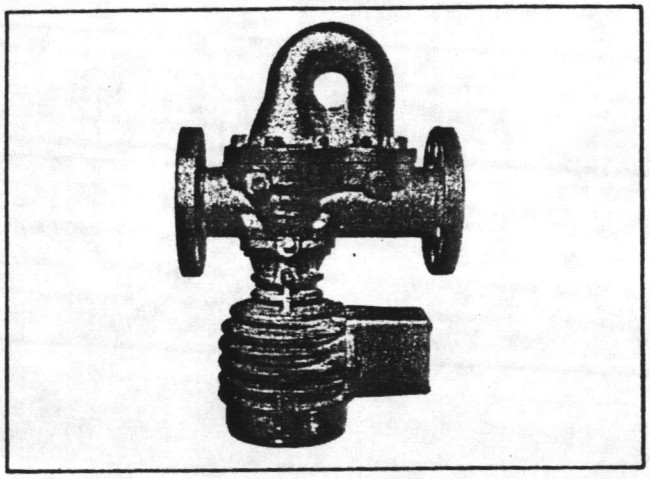

Fig. 2 – Basic meter showing conduit box for optional electronic output

Digital/Analog Output: When a Digital/Analog output signal is required, a bronze probe-well is permanently screwed and sealed into the cooling chamber.

A magnetic pickup, in a cast iron conduit box and gasketed steel cover is tightly screwed into the probe-well and secured with a check nut.

The pickup generates a low voltage pulse for every passage of a lower fan blade. At rated capacity the pickup will generate a 20 pulse per second signal. An electronic transmitter amplifies this signal and converts it into an analog 4-20 mA DC signal or a digital 0-20 (nominal) pulse per second pulse train signal.

The electronic converter output is jumper selectable for 0-20 pulse per second or 4-20 mA DC. A pulse receiver circuit is required to use the 0-20 pulse per second mode. Both the transmitter and pulse receiver are made from various electronic components mounted on an etched copper clad fiberglass/epoxy circuit card which is mounted in a steel NEMA 4 enclosure.

No stuffing box: Problems of pressure or leakage are eliminated by the design of magnetic, rather than mechanical transmission of rotation. Slippage of the magnetic drive does not occur in normal operation, since the speed of the driving magnet is only about one revolution per minute at rated capacity.

Printed in U.S.A.

Counter: Direct reading in pounds of steam or cubic feet of air or gas. Readout is on 6-digit dial and pointer type, or cyclometer type counter as specified.

Capacity: Model 402 Shuntflo meters are available in eight standard orifice sizes. The rated capacities at pressures from 1 to 300 psig are shown in Capacity Table, Ref. No. 400.21-3.

Capacities and ranges: In the 4-20 mA DC mode, 4 mA corresponds to no flow and 20 mA corresponds to 150% of capacity. The 20 mA value may be altered to meet special customer requirements as determined by the product engineer.

In the 0-20 pulse per second mode, 0 pulse per second corresponds to no flow and 20 pulse per second corresponds to about 100% of capacity. The specific pulse rate for 100% capacity is determined by flow calibration and appears on the nameplate as the totalized flow value for 100 pulses.

Damping liquid: For steam, the damping liquid is water, replenished and maintained by condensation during operation.

For air or gas, the damping liquid may be kerosene, water, anti-freeze solution, or other liquid depending upon the nature of the gas. For visual check of the liquid, a gauge glass should be specified.

Meters are calibrated using the same damping fluid to be used in field installation.

Electrical requirements for Digital/ Analog Model

Transmitter power: 4-20 mA DC loop power, 12 to 45 VDC. The power is supplied by receiving equipment such as the BIF "B" case recorder or a similar device that supplies current loop power.

Pulse receiver power: 117 VAC, 50/60 Hz, 2 Watt.

Maximum loop impedence: 1,000 ohm includes wire and receiving equipment.

Signal transmission: Up to 1,000 ft. by twisted pair #22 AWG (or larger) wire. Shielded twisted pair such as Belden #8451 #22 AWG or Belden #8760 #18 AWG is preferred – especially in areas with power equipment or other electrical noise sources. Cable must not run in conduit with power wiring.

Maximum distance between Shuntflo meter and transmitter is 25 ft. (as supplied). This cable may be run in conduit. Both Shuntflo meter and transmitter will accept 1/2 inch conduit connections.

Pulse receiver output: Optically isolated, open collector transistor switch.

Optional Accessories

Gauge glass
Pressure compensated counter
Combined counter and contactor
Remote totalizer, electrically operated
Mechanical totalizer (optional on electronic units)
BIF instrumentation such as "B" case, etc. (electronic units only)

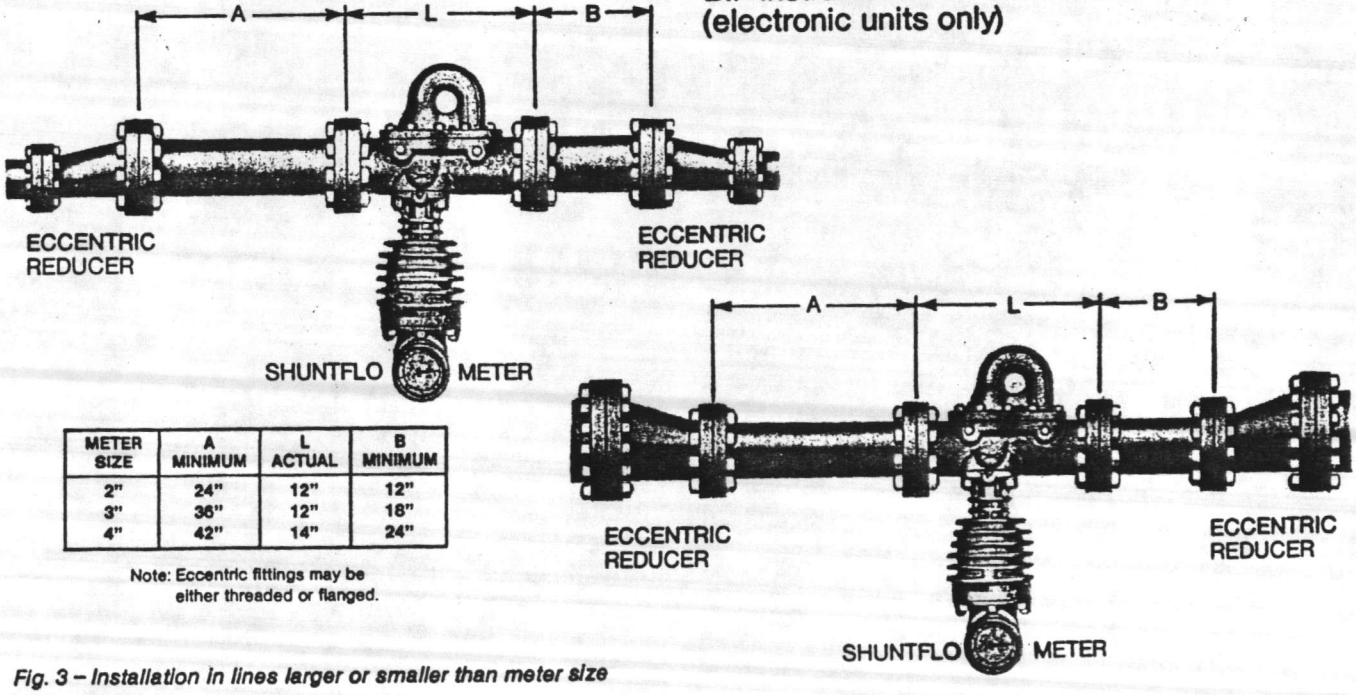

METER SIZE	A MINIMUM	L ACTUAL	B MINIMUM
2"	24"	12"	12"
3"	36"	12"	18"
4"	42"	14"	24"

Note: Eccentric fittings may be either threaded or flanged.

Fig. 3 – Installation in lines larger or smaller than meter size

SELECTION NUMBER

AFTER SELECTING

Meter Size, Press. & Capacity Range, Use Appropriate Selection No. In Field 6 of Product Configuration

EX:

0402 - 02 - 05 - 01 - [3] - 0

Field 6

Provide A 2-AO Orifice Assembly

Gauge Press. p.s.i.	Min. Cap. lb/hr	Rated Cap. lb/hr
1-C		
LOW PRESSURE		
1	5.6	33.3
5	6.2	37.0
10	6.8	41.0
20	8.1	48.5
30	9.1	54.5
40	10.0	60.0
50	10.8	65.0
STANDARD		
50	12.9	129.0
60	13.8	138.0
70	14.7	147.0
75	15.1	151.0
80	15.5	155.0
90	16.3	162.5
100	17.0	170.0
110	17.7	176.5
120	18.4	183.5
125	18.7	186.5
130	20.2	202.0
175	21.6	216.0
200	23.0	230.0
225	24.2	242.0
250	25.4	254.0
EXTRA HEAVY		
275	26.6	266.0
300	27.7	277.0
2-C		
LOW PRESSURE		
1	58.5	585.0
5	65.0	650.0
10	73.0	730.0
20	85.0	850.0
30	96.0	960.0
40	106.0	1060.0
50	115.0	1150.0
STANDARD		
50	169.0	1690.0
60	181.0	1810.0
70	193.0	1930.0
75	198.0	1980.0
80	203.0	2030.0
90	213.0	2130.0
100	223.0	2230.0
110	232.0	2320.0
120	241.0	2410.0
125	245.0	2450.0
150	265.0	2650.0
175	284.0	2840.0
200	302.0	3020.0
225	318.0	3180.0
250	334.0	3340.0
EXTRA HEAVY		
275	349.0	3490.0
300	364.0	3640.0
3-C		
LOW PRESSURE		
1	113.0	1125.0
5	125.0	1250.0
10	139.0	1390.0
20	163.0	1630.0
30	184.0	1840.0
40	203.0	2030.0
50	220.0	2200.0
STANDARD		
50	370.0	3700.0
60	396.0	3960.0
70	421.0	4210.0
75	432.0	4320.0
80	444.0	4440.0
90	466.0	4660.0
100	487.0	4870.0
110	507.0	5070.0
120	526.0	5260.0
125	535.0	5350.0
150	579.0	5790.0
175	620.0	6200.0
200	659.0	6590.0
225	695.0	6950.0
250	730.0	7300.0
EXTRA HEAVY		
275	763.0	7630.0
300	795.0	7950.0
4-C		
LOW PRESSURE		
1	232.0	2320.0
5	258.0	2580.0
10	287.0	2870.0
20	337.0	3370.0
30	380.0	3800.0
40	418.0	4180.0
50	454.0	4540.0
STANDARD		
50	832.0	8320.0
60	892.0	8920.0
70	948.0	9480.0
75	974.0	9740.0
80	1000.0	10000.0
90	1049.0	10490.0
100	1096.0	10960.0
110	1141.0	11410.0
120	1184.0	11840.0
125	1205.0	12050.0
150	1305.0	13050.0
175	1396.0	13960.0
200	1483.0	14830.0
225	1565.0	15650.0
250	1643.0	16430.0
EXTRA HEAVY		
275	1717.0	17170.0
300	1789.0	17890.0

Gauge Press. p.s.i.	Min. Cap. lb/hr	Rated Cap. lb/hr
1-D		
LOW PRESSURE		
1	7.3	51.3
5	8.1	57.0
10	9.1	63.5
20	10.6	74.5
30	12.0	84.0
40	13.2	92.5
50	14.3	100.0
STANDARD		
50	19.8	198.0
60	21.2	212.0
70	22.6	226.0
75	23.2	232.0
80	23.8	238.0
90	25.0	250.0
100	26.1	261.0
110	27.2	272.0
120	28.2	282.0
125	28.7	287.0
150	31.1	311.0
175	33.2	332.0
200	35.3	353.0
225	37.2	372.0
250	39.1	391.0
EXTRA HEAVY		
275	40.9	409.0
300	42.6	426.0
2-D		
LOW PRESSURE		
1	82.8	828.0
5	92.0	920.0
10	103.0	1030.0
20	121.0	1210.0
30	136.0	1360.0
40	150.0	1500.0
50	162.0	1620.0
STANDARD		
50	264.0	2640.0
60	283.0	2830.0
70	300.0	3000.0
75	308.0	3080.0
80	317.0	3170.0
90	332.0	3320.0
100	347.0	3470.0
110	361.0	3610.0
120	375.0	3750.0
125	382.0	3820.0
150	414.0	4140.0
175	443.0	4430.0
200	470.0	4700.0
225	496.0	4960.0
250	520.0	5200.0
EXTRA HEAVY		
275	544.0	5440.0
300	567.0	5670.0
3-D		
LOW PRESSURE		
1	171.0	1710.0
5	190.0	1900.0
10	212.0	2120.0
20	249.0	2490.0
30	281.0	2810.0
40	309.0	3090.0
50	336.0	3360.0
STANDARD		
50	598.0	5980.0
60	641.0	6410.0
70	681.0	6810.0
75	699.0	6990.0
80	718.0	7180.0
90	754.0	7540.0
100	787.0	7870.0
110	820.0	8200.0
120	851.0	8510.0
125	866.0	8660.0
150	937.0	9370.0
175	1003.0	10030.0
200	1066.0	10660.0
225	1124.0	1124.0
250	1180.0	11800.0
EXTRA HEAVY		
275	1234.0	12340.0
300	1285.0	12850.0
4-D		
LOW PRESSURE		
1	302.0	3015.0
5	335.0	3350.0
10	373.0	3730.0
20	438.0	4380.0
30	495.0	4950.0
40	544.0	5440.0
50	589.0	5890.0
STANDARD		
50	1103.0	11030.0
60	1182.0	11820.0
70	1255.0	12550.0
75	1290.0	12900.0
80	1324.0	13240.0
90	1390.0	13900.0
100	1452.0	14520.0
110	1512.0	15120.0
120	1569.0	15690.0
125	1596.0	15960.0
150	1729.0	17290.0
175	1850.0	18500.0
200	1965.0	1965.0
225	2073.0	20730.0
250	2177.0	21770.0
EXTRA HEAVY		
275	2275.0	22750.0
300	2370.0	23700.0

Gauge Press. p.s.i.	Min. Cap. lb/hr	Rated Cap. lb/hr
1-E		
LOW PRESSURE		
1	8.6	69.3
5	9.6	77.0
10	10.7	85.5
20	12.5	100.0
30	14.1	113.0
40	15.6	125.0
50	16.9	135.0
STANDARD		
50	26.6	266.0
60	28.7	287.0
70	30.5	305.0
75	31.4	314.0
80	32.2	322.0
90	33.8	338.0
100	35.3	353.0
110	36.7	367.0
120	38.1	381.0
125	38.8	388.0
150	42.0	420.0
175	45.0	450.0
200	47.7	477.0
225	50.3	503.0
250	52.8	528.0
EXTRA HEAVY		
275	55.2	552.0
300	57.5	575.0
2-E		
LOW PRESSURE		
1	96.3	963.0
5	107.0	1070.0
10	119.0	1190.0
20	140.0	1400.0
30	158.0	1580.0
40	174.0	1740.0
50	188.0	1880.0
STANDARD		
50	315.0	3150.0
60	338.0	3380.0
70	359.0	3590.0
75	369.0	3690.0
80	379.0	3790.0
90	397.0	3970.0
100	415.0	4150.0
110	432.0	4320.0
120	448.0	4480.0
125	456.0	4560.0
150	494.0	4940.0
175	529.0	5290.0
200	562.0	5620.0
225	593.0	5930.0
250	622.0	6220.0
EXTRA HEAVY		
275	650.0	6500.0
300	677.0	6770.0
3-E		
LOW PRESSURE		
1	203.0	2025.0
5	225.0	2250.0
10	250.0	2500.0
20	294.0	2940.0
30	332.0	3320.0
40	365.0	3650.0
50	396.0	3960.0
STANDARD		
50	718.0	7180.0
60	769.0	7690.0
70	817.0	8170.0
75	840.0	8400.0
80	862.0	8620.0
90	905.0	9050.0
100	945.0	9450.0
110	984.0	9840.0
120	1021.0	10210.0
125	1039.0	10390.0
150	1125.0	11250.0
175	1204.0	12040.0
200	1279.0	12790.0
225	1350.0	13500.0
250	1417.0	14170.0
EXTRA HEAVY		
275	1481.0	14810.0
300	1542.0	15420.0
4-E		
LOW PRESSURE		
1	358.0	3582.0
5	398.0	3980.0
10	443.0	4430.0
20	520.0	5200.0
30	587.0	5870.0
40	645.0	6450.0
50	700.0	7000.0
STANDARD		
50	1320.0	13200.0
60	1415.0	14150.0
70	1503.0	15030.0
75	1545.0	15450.0
80	1585.0	15850.0
90	1663.0	16630.0
100	1739.0	17390.0
110	1810.0	18100.0
120	1878.0	18780.0
125	1911.0	19110.0
150	2070.0	20700.0
175	2215.0	22150.0
200	2352.0	23520.0
225	2481.0	24810.0
250	2605.0	26050.0
EXTRA HEAVY		
275	2723.0	27230.0
300	2837.0	28370.0

SAMPLE

SC-1324	SC-1350	SC-1356	SC-1358	SC-1362	SC-1364
Median selector	Frequency transmitter	Linear integrator	Square root integrator	Signal limiter	Lead or lag transmitter
Accepts 3 inputs and provides a process signal output proportional to the median input of the three	Accepts turbine/ flowmeter or tach/ speed pickup inputs	Converts analog input into variable pulse rate output	Converts the square root of an analog input signal to a pulse rate	Accepts standard inputs (useful for limiting motor or pump speeds)	Produces a phase delay or a phase lead to a process loop (useful in control circuits using feed-forward technique)
Input / Input Imped. 0–1 Vdc / 2 MΩ 0.25–1.25 Vdc / 2 MΩ 1–5 Vdc / 5 MΩ 0–1 mA / 5000Ω 1–5 mA / 1000Ω 2–10 mA / 500Ω 4–20 mA / 250Ω 10–50 mA / 100Ω Note: Any of the above ranges can also be *zero based*	Frequency input spans from 5.8 Hz to 24,000 Hz Impedance—1 MΩ Signal level—10 mV rms to 100 volts rms	Input / Input Impedance 1–5 Vdc / 5 MΩ 0–2 Vdc / 4 MΩ 0.25–1.25 Vdc / 2 MΩ 0–1 Vdc / 2 MΩ 0–500 mV dc / 1 MΩ 0–200 mV dc / 400 kΩ 0–100 mV dc / 200 kΩ 0–50 mV dc / 100 kΩ 0–1 mA / 5000Ω 1–5 mA / 1000Ω 2–10 mA / 500Ω 4–20 mA / 250Ω 10–50 mA / 100Ω Note: Any of the above ranges can also be *zero based*		Input / Input Impedance 0–1 Vdc / 2 MΩ 0.25–1.25 Vdc / 2 MΩ 1–5 Vdc / 5 MΩ 0–1 mA / 5000Ω 1–5 mA / 1000Ω 2–10 mA / 500Ω 4–20 mA / 250Ω 10–50 mA / 100Ω Note: Any of the above ranges can also be *zero based*	
mA / Output Drive Capability 10–50 mA / 320Ω 4–20 mA / 800Ω 2–10 mA / 1600Ω 1–5 mA / 3200Ω 0.2–1 mA / 16,000Ω Vdc / Output Impedance 2–10 Vdc / 500Ω 1–5 Vdc / 250Ω 0.2–1 Vdc / 50Ω 0–100 mV dc / 5Ω 0–10 mV dc / 0.5Ω Note: Any of the above ranges can also be *zero based*		Counts—0–60 to 0–64,000 counts per hour, full scale as specified (field adjustable over the entire range) Output pulse rating—24 Vdc into a minimum load of 100Ω, nominal 35 milliseconds duration Relay output rating—15 vA (Suffix K1)		mA / Output Drive Capability 10–50 mA / 320Ω 4–20 mA / 800Ω 2–10 mA / 1600Ω 1–5 mA / 3200Ω 0.2–1 mA / 16,000Ω Vdc / Output Impedance 2–10 Vdc / 500Ω 1–5 Vdc / 250Ω 0.2–1 Vdc / 50Ω 0–100 mV dc / 5Ω 0–10 mV dc / 0.5Ω Note: Any of the above ranges can also be *zero based*	
For 25°F to 125°F (–4°C to 52°C): ±0.01%/°F (±0.018%/°C) maximum, ±0.004%/°F (±0.007%/°C) typical					
Less than 50 milliseconds (10–90%)	100 milliseconds from 60 Hz to 24,000 Hz; for less than 60 Hz response time is equal to seven input pulses	Less than 50 milliseconds (10–90%)			a. Lag time 0.005 to 50 minutes (5 ranges) b. Lead time 0.005 to 50 minutes (5 ranges)
20 turn zero and span potentiometers	20 turn zero and span potentiometers	20 turn zero, span, and dropout potentiometers		20 turn zero and span, hi-limit, and lo-limit potentiometers	20 turn output zero, input zero, span, low time constant, and time constant controls
1. Input surge protection: 115 Vac, 150 Vdc applied to the input terminals indefinitely without damage to circuitry (input shunt for current applications may be damaged)	1. See chart, page 23	1. Zero dropout: 0.5 to 20% adjustable (factory-set at 1% unless otherwise specified) 2. Pulse counter available	1. Zero dropout: 0.5 to 4% adjustable (factory-set at 1% unless otherwise specified) 2. Square root operation: may be converted in the field to linear operation 3. Pulse counter available	1. Input surge protection: 115 Vac, 150 Vdc applied to the input terminals indefinitely without damage to circuitry (input shunt for current applications may be damaged)	1. Zero frequency gain: 0.800 to 1.200, adjustable 2. Rate gain (lead mode only): 10 3. Select lead or lag mode (jumpers on printed circuit board) S
Input/Power isolation for ac or isolated dc powered units					

INPUT/OUTPUT & WIRING DATA

SC-1300R

When using these slidewire inputs...

	SLIDEWIRE RANGE, OHMS		SLIDE WIRE CURRENT (MAX.)
	MIN.	MAX.	
R1	0-10	0-50	10 mA
R2	0-50	0-100	10 mA
R3	0-100	0-199	10 mA
R4	0-200	0-399	5 mA
R5	0-400	0-799	2 mA
R6	0-800	0-1499	1 mA
R7	0-1500	0-2999	0.5 mA
R8	0-3000	0-5999	0.25 mA
R9	0-5999	0-10,000	0.15 mA

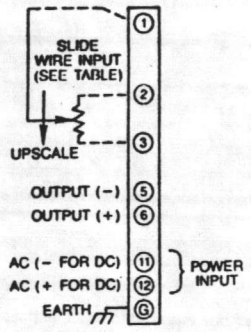

SC-1320

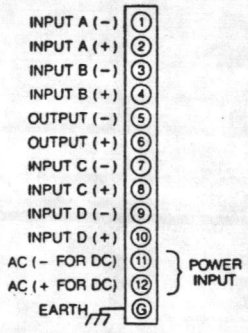

SC-1324

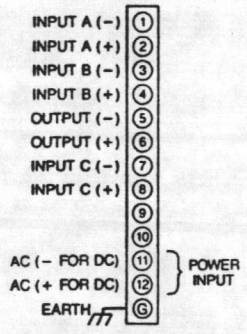

SC-1350

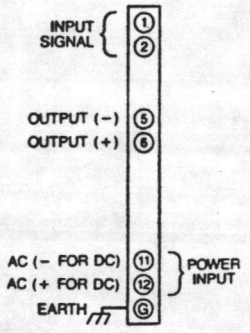

When using these Frequency Inputs...

	FREQUENCY	
RANGE	MINIMUM	MAXIMUM
R1	*0-30	0-120 Hz
R2	0-100	0-400 Hz
R3	0-350	0-1000 Hz
R4	0-950	0-4000 Hz
R5	0-3500	0-10,000 Hz
R6	0-9000	0-20,000 Hz

*Low-cut off frequency with isolation is 10 Hz.

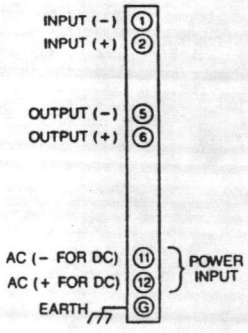

SC-1356/58

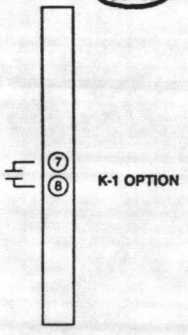

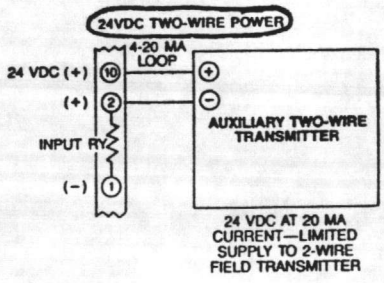

SC-1362

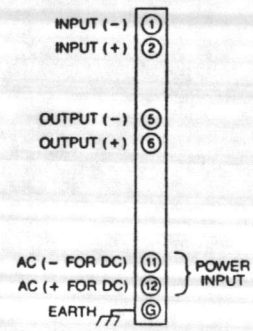

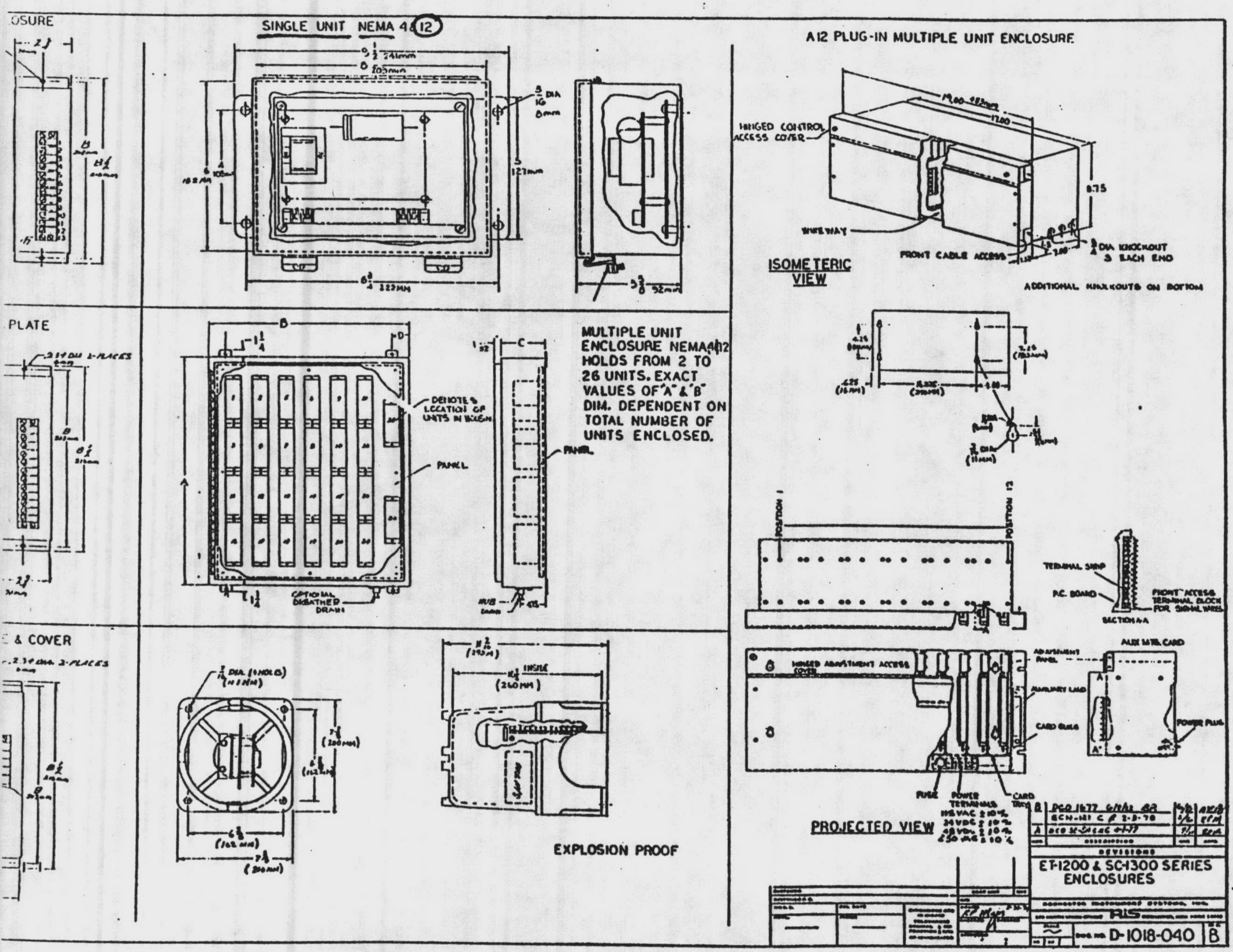

OSURE
SINGLE UNIT NEMA 4&12
PLATE
MULTIPLE UNIT ENCLOSURE NEMA 4&12 HOLDS FROM 2 TO 26 UNITS. EXACT VALUES OF "A" & "B" DIM. DEPENDENT ON TOTAL NUMBER OF UNITS ENCLOSED.
DENOTES LOCATION OF UNITS IN BOLSH
PANEL
OPTIONAL BREATHER DRAIN
& COVER
EXPLOSION PROOF
A12 PLUG-IN MULTIPLE UNIT ENCLOSURE
HINGED CONTROL ACCESS COVER
WIREWAY
FRONT CABLE ACCESS
ISOMETERIC VIEW
ADDITIONAL KNOCKOUTS ON BOTTOM
POSITION 1
POSITION 12
TERMINAL STRIP
P.C. BOARD
FRONT ACCESS TERMINAL BLOCK FOR SIGNAL WIRES
SECTION A-A
HINGED ADJUSTMENT ACCESS COVER
ADJUSTMENT PANEL
AUXILIARY CARD
CARD GUIDE
POWER PLUG
FUSE
POWER TERMINALS
CARD TRAY
PROJECTED VIEW
REVISIONS
ET-1200 & SC-1300 SERIES ENCLOSURES
RIS
D-1018-040
B

11

Outline & Mounting for:

6 Digit Resettable Counter (RiS P/N 6008-502)
→ 8 Digit Non-Resettable Counter (RiS P/N 6008-503)

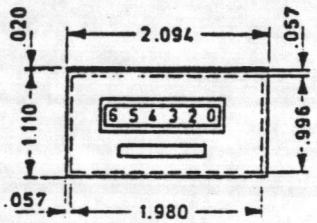

Cut-out size 51 x 26 mm
2" x 1"

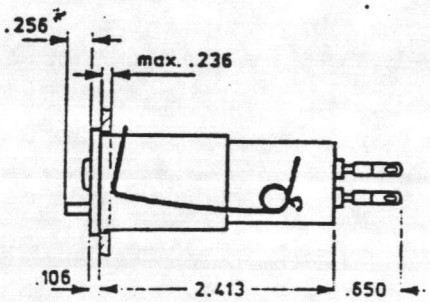

* 6 Digit Resettable Only

ROCHESTER INSTRUMENT SYSTEMS
255 NORTH UNION STREET, ROCHESTER, NEW YORK 14605

Outline & Mounting
Electromechanical Counters

New Release			A-1043-868	REV A
DESCRIPTION	CHK.			
REVISIONS			SHEET 1 OF 1	

TAB PLACEMENT HERE

DESCRIPTION:

9.

☐ **Tab page did not contain hand written information**

☑ **Tab page contained hand written information**
***Scanned as next image**

Confidential Records Management, Inc.
New Bern, NC
1-888-622-4425
9/08

15805-9.4, 9.5

HANG DUCT FROM CEILING

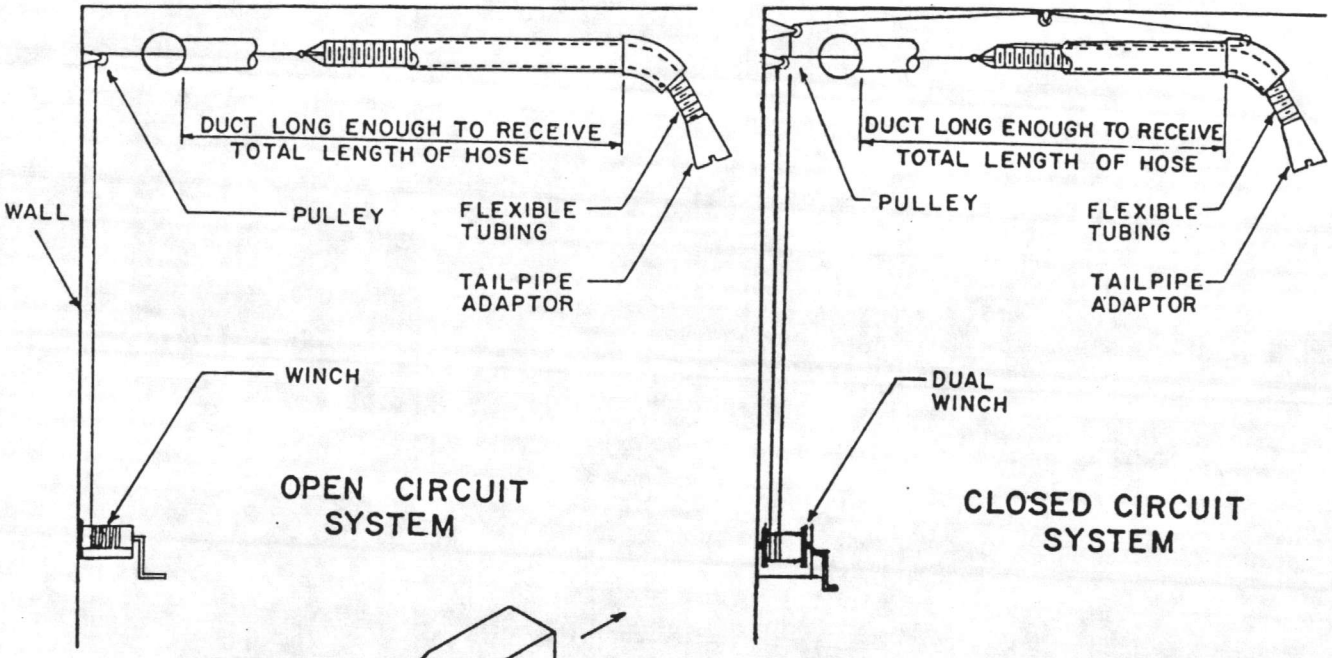

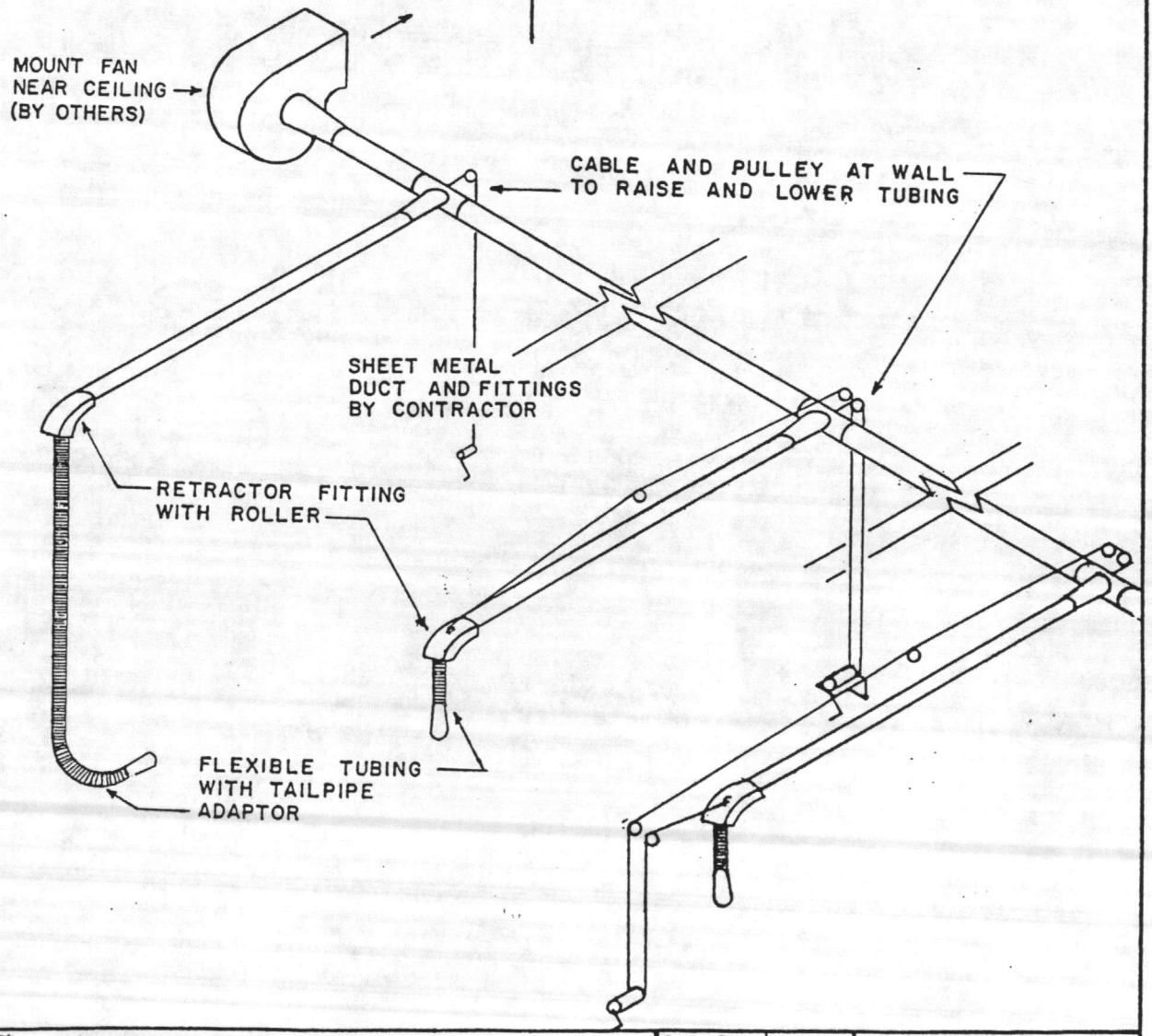

Applied Instruction
Camp Lejeune, N.C. N62470-84-C-4087

OVERHEAD DISAPPEARING SYSTEMS

Drawn By E.F.J.	Date 5/15/80	CESCO-ADVANCED AIR
Approved By MWH	Date 6/11/80	C.E. SPARROW CO., INC. MPLS., MINN.
Scale		Drawing No. F552-305A580

Maintenance and Operating Instructions

SERIES BI

RECEIVING INSPECTION — When unit is received, check immediately for damage or missing parts. Check wheel to see that it rotates freely. Report any damage to carrier.

INSTALLATION — Blowers should be mounted to rigid flat foundations with flexible connections to inlet and discharge. Mounting bolts and lock washers should be tightened securely. Shim where foundation is not level. When vibration pads are used, the same care is required. Fasten pads directly to the unit and place shims between pads and foundation.

After the unit is mounted, check all fasteners including wheel set screws to see that everything is secure. Wheel must have clearance from inlet and rotate freely. Motor and blower pulleys should be aligned and motor mounted securely to blower unit.

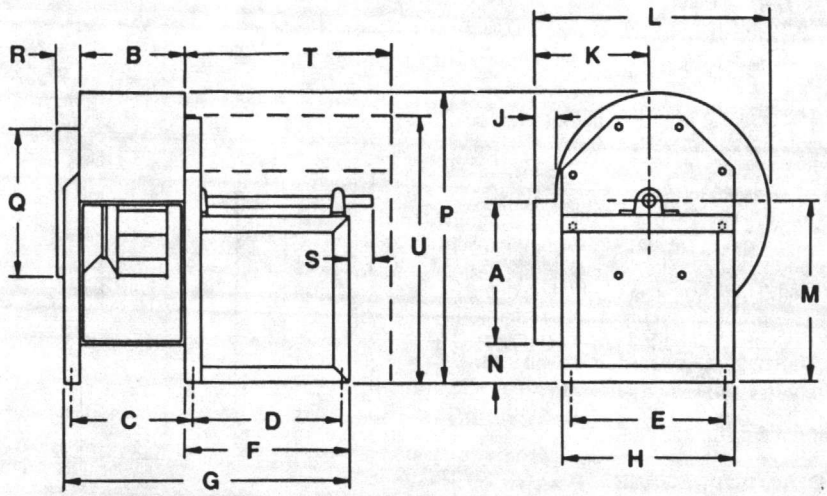

UNIT SIZE	A	B	C	D	E	F	G	H	J	K	L	M	N	P	Q	R	S	DRIVE COVER T	DRIVE COVER U	WHEELS DIA.	WHEELS BORE
BI 12	13⅛	9⅞	11⅞	13¼	12⅝	15¼	26⅝	14⅝	2	10	20½	14¾	1¾	24	13	2	2¼	18⅝	21⅞	12¼	1
BI 13	14⅜	10¾	12¾	14	14⅞	16	28¼	16⅞	2	10¾	22½	17½	3¼	27¾	14⅜	2	2¼	19⅜	25⅝	13½	1
BI 15	16	12	14	15	15¾	17	30⅞	17¾	2	11¾	24¾	20¼	4⅜	31⅝	15⅞	2	2¼	21⅜	28⅞	15	1
BI 16	17⅝	13⅛	15⅛	16	17⅞	18	33⅛	20⅛	2	12¾	26⅞	20	2⅝	32½	17⅜	2	3	22⅛	29½	16½	1 3/16
BI 18	19⅜	14½	16½	17	19¾	19	35½	22	2	13⅞	29⅝	24	4¾	37¾	19⅜	2	3½	23½	34⅜	18¼	1 3/16
BI 20	21¼	15¾	18¾	17	17¼	20	38¼	24	2	15	32¼	28	6⅞	43⅛	21¼	2½	3	25	40	20	1 3/16
BI 22	23⅝	17⅝	20⅝	18	19¼	21	41⅛	26	2	16⅜	35⅝	30	6½	46⅞	23⅝	2½	3½	26	43	22¼	1 3/16
BI 24	26	19⅜	21⅞	17¼	22	22	43⅞	28	2	17⅞	39	32	6⅛	50½	26	2½	4	27	46	24½	1 7/16
BI 27	28⅝	21¼	28⅜	14⅝	23	24	47¾	30	2	19½	42¾	34½	6	54⅞	28⅝	2½	4	29	49½	27	1 7/16
BI 30	31¾	23⅝	30¾	16⅝	27	26	52⅛	34	2	21⅜	47¼	39	7⅜	61⅝	31¾	2½	4	31	56	30	1 11/16
BI 33	34⅞	26	30¾	19	37½	26	54½	39¾	2	23⅜	51¾	38⅞	4	63¾	35	2½	4¾	33	58⅝	33	1 11/16
BI 36	38⅝	28¾	33½	19	41½	26	57¼	43¾	2	25⅝	57	42⅝	4⅛	70⅛	38¾	2½	4¾	33	64⅜	36½	1 15/16

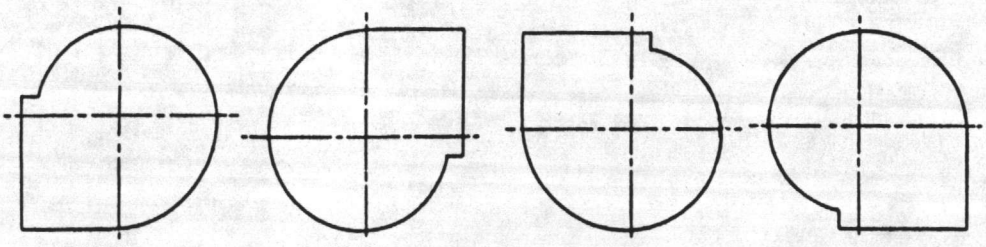

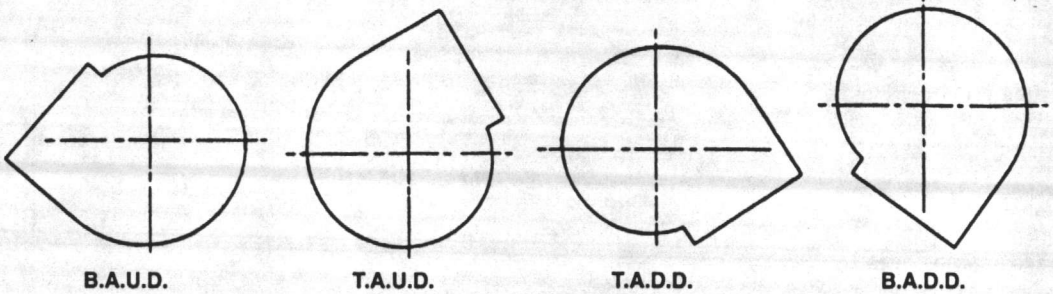

CHANGING DISCHARGE — If the discharge requires changing, there are frame screws on each side of the housing to permit rotation to one of the eight (8) locations.

Maintenance and Operating Instructions

SERIES BI

When changing discharge, care should be taken to maintain proper wheel to inlet relationship, Fig. #1, and deflector location, Fig. #2 and #3.

Improper wheel to inlet or deflector location will result in a loss of performance.

V-BELT DRIVES— V-Belt Drives have been sized for long life with proper care. It is important that the drives be in good alignment, with motor and blower shafts parallel. Motor must be adjusted until about ¾" deflection of the belt is noted with finger pressure in the middle of the belt. Small changes in motor adjustment from this starting point may be needed for smoothest operation. Belts stretch over a period of time, and motor should be adjusted to compensate for this.

ELECTRIC CONNECTION— Motors must be installed in accordance with wiring diagrams of motor and local ordinances involved. Unit should be started momentarily to check rotation of blower wheel, as the unit will deliver some air even with the motor running *backwards*.

BALL BEARINGS — Smaller sizes of ball-bearings are factory packed with grease and need no further lubrication. The larger sizes have access for grease fittings, but for normal conditions of service they require no futher lubrication. Normal service is considered as operation in reasonably clean surroundings at temperatures between -20°F. and 180°F. and at shaft surface speeds up to 2,100 ft. per minutes. This corresponds to a 1" shaft at 8,000 RPM, which is far faster than maximum recommended blower speeds. Where service is abnormal with respect to temperature, exposure to water, dirt or corrosive chemicals, periodic relubrication may be advisable.

BALL BEARING REPLACEMENT— Press locking collar against inner ring and turn in the direction of shaft rotation until tightly engaged. Insert drift pin in pin hole and tap lightly to set.

Tighten set screw in the locking collar firmly.

TAPER LOCK BUSHING— Some sizes will be equipped with a taper lock bushing on the wheel hub. If wheel is removed and re-installed, or replaced, the bolts in the taper lock bushing should be torqued to 155 inch pounds. This will require more than one sequence around the bolt circle.

GENERAL— Periodic inspection should be made to determine if the unit is still soundly mounted and the belt is not slipping. Accumulations of dust and oil on the wheel will impair its performance and put the unit out of balance. If this occurs, it is necessary to clean the wheel and housing. It is especially dangerous to allow large amounts of oil to accumulate in a system, for this represents a fire hazard.

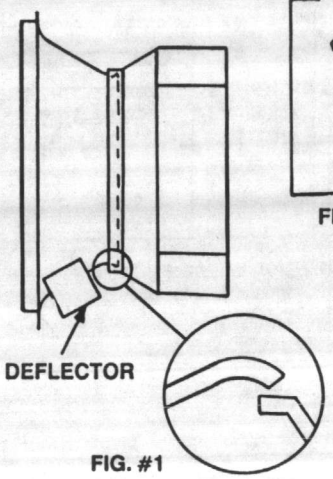

FIG. #1

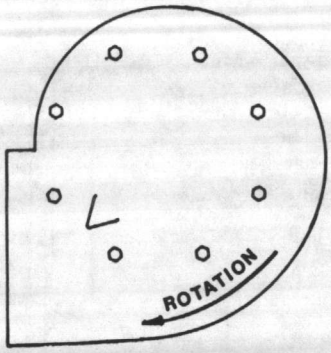

FIG. #2 (BI12 THRU BI18)

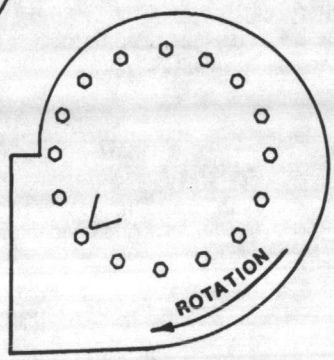

FIG. #3 (BI120 THRU BI36)

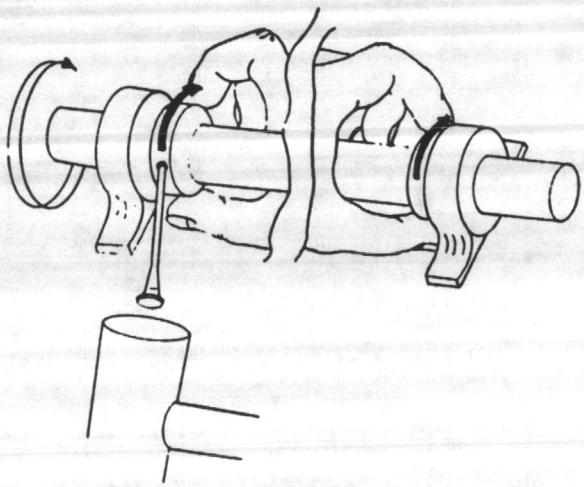

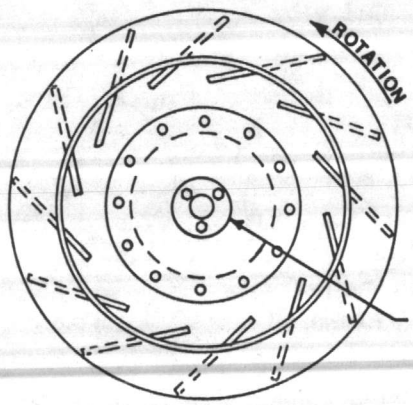

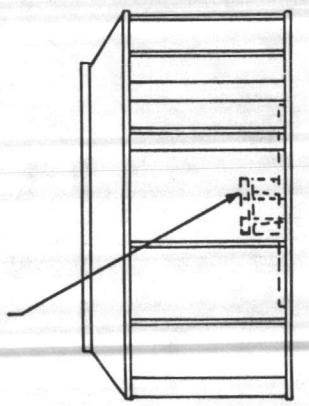

Parts List

SERIES **BI**

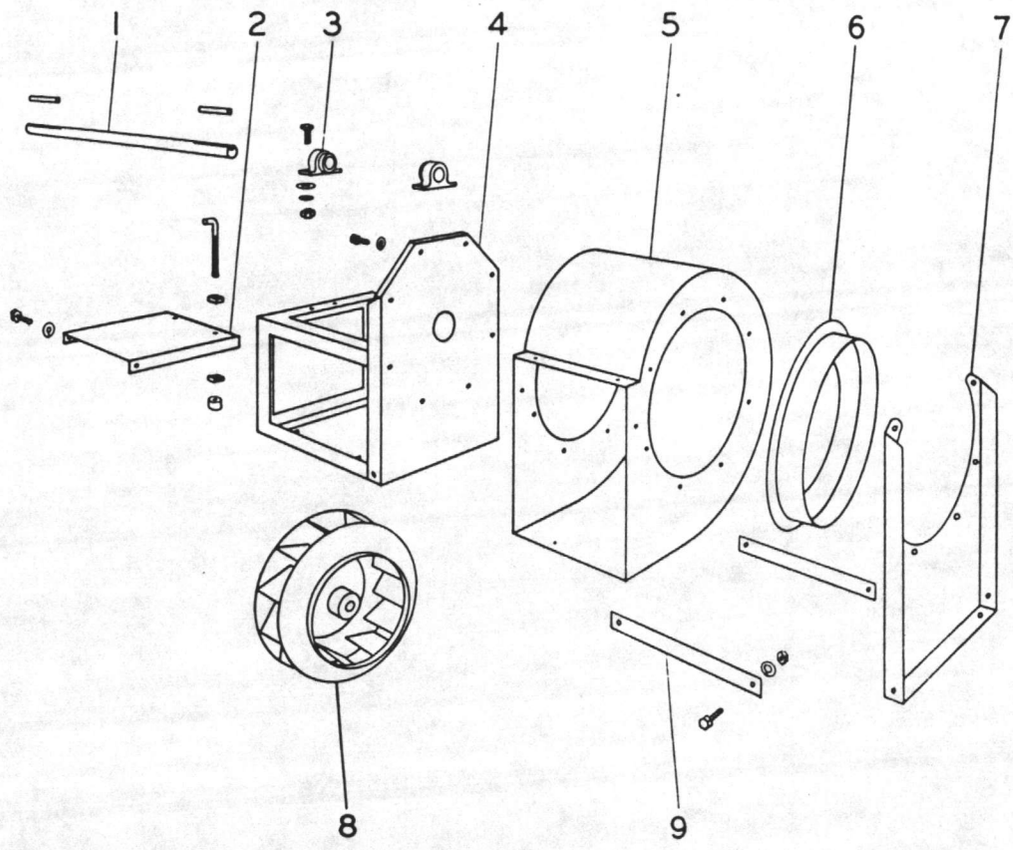

MODEL NO.	ITEMS								
	1	2	3	4	5	6	7	8	9
	SHAFT	PLATE	BEARING	FRAME	HOUSING	INLET	SUPPORT	WHEEL	TIE BAR
BI12CR	5616828	1513400	8001621	1012700	2012701	2812700	1112700	3012701	1412700
CCW-					2012702			3012702	
BI13CR	5616822	1516400	8001621	1013700	2013701	2813700	1113701	3013701	1413700
CCW					2013702			3013702	
BI15CR	5616829	1516400	8001621	1015700	2015701	2815700	1115701	3015701	1415700
CCW					2015702			3015702	
BI16CR	5619811	1518400	8001921	1016700	2016701	2816700	1116701	3016701	1416700
CCW					2016702			3016702	
BI18CR	5619805	1521400	8001921	1018700	2018701	2818700	1118701	3018701	1418700
CCW					2018702			3018702	
BI20CR	5619805	1521400	8001921	1020700	2020701	2820700	1120701	3020701	—
CCW					2020702			3020702	
BI22CR	5619807	1521400	8001921	1022700	2022701	2822700	1122701	3022701	—
CCW					2022702			3022702	
BI24CR	5623800	1527400	8002321	1024700	2024701	2824700	1124701	3024701	—
CCW					2024702			3024702	
BI27CR	5623802	1527400	8002321	1027700	2027701	2827700	1127701	3027701	—
CCW					2027702			3027702	
BI30CR	5626804	1527400	8002621	1030700	2030701	2830700	1130701	3030701	—
CCW					2030702			3030702	
BI33CR	5626805	1527400	8002621	1033700	2033701	2833700	1133701	3033701	—
CCW					2033702			3033702	
BI36CR	5631802	1527400	8003121	1036700	2036701	2836700	1136701	3036701	—
CCW					2036702			3036702	

Maintenance and Operating Instructions

SERIES CX

FORWARD CURVED
BLOWER MAINTENANCE AND OPERATING INSTRUCTIONS

RECEIVING INSPECTION — When unit is received, check immediately for damage or missing parts. Check wheel to see that it rotates freely. Report any damage to carrier.

INSTALLATION — Blowers should be mounted to rigid flat foundations with flexible connections to inlet and discharge. Mounting bolts and lock washers should be tightened securely. Shim where foundation is not level. When vibration pads are used, the same care is required. Fasten pads directly to the unit and place shims between pads and foundation.

After the unit is mounted, check all fasteners including wheel set screws to see that everything is secure. Wheel must have clearance from inlet and rotate freely. Motor and blower pulleys should be aligned and motor mounted securely to blower unit.

V-BELT — V-Belt drives have been sized for long life with proper care. It is important that the drives be in good alignment, with motor and blower shafts parallel. Motor must be adjusted until about ¾" deflection of the belt is noted with finger pressure in the middle of the belt. Small changes in motor adjustment from this start may be needed for smoothest operation. Belts stretch over a period of time, and motor should be adjusted to compensate for this.

ELECTRIC CONNECTION — Motors must be installed in accordance with wiring diagrams of motor and local ordinances involved. It is important that overload protection be given the motor since changing electrical and blower system conditions may overload the motor. Unit should be started momentarily to check rotation of blower wheel, as the unit will deliver some air even with the motor running *backwards*.

BALL BEARINGS — Smaller sizes of ball bearings are factory packed with grease and need no further lubrication. The larger sizes have access for grease fittings, but for normal conditions of service they *require no futher lubrication*. Normal service is considered as operation in reasonably clean surroundings at temperatures between -20°F. and 180°F. and at shaft surface speeds up to 2,100 ft. per minute. This corresponds to a 1" shaft at 8,000 RPM, which is far faster than maximum recommended blower speeds. Where service is abnormal with respect to temperature, exposure to water, dirt or corrosive chemicals, periodic relubrication may be advisable.

GENERAL — Periodic inspection should be made to determine if the unit is still soundly mounted and the belt not slipping. Accumulations of dust and oil on the wheel will impair its performance and put the unit out of balance. If this occurs, it is necessary to clean the wheel and housing. It is especially dangerous to allow large amounts of oil to accumulate in a system, for this represents a fire hazard.

Parts List

SERIES CX

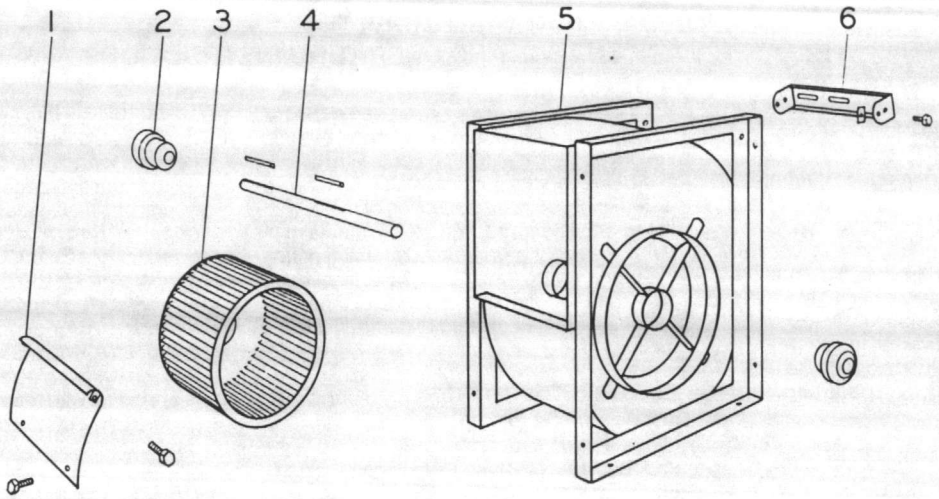

MODEL NO.	ITEMS					
	1	2	3	4	5	6
	CUTOFF	BEARING	WHEEL	SHAFT	HOUSING	MOTOR MT.
SX1005A200	5710400	8011223	3010404	5612402	2010401	9010400
SX1306A200	5713400	8011223	3013404	5612403	2013401	9013400
SX1607A200	5716400	8011624	3016404	5616400	2016401	9016400
SX1809A200	5718400	8011624	3018402	5616818	2018401	9018400

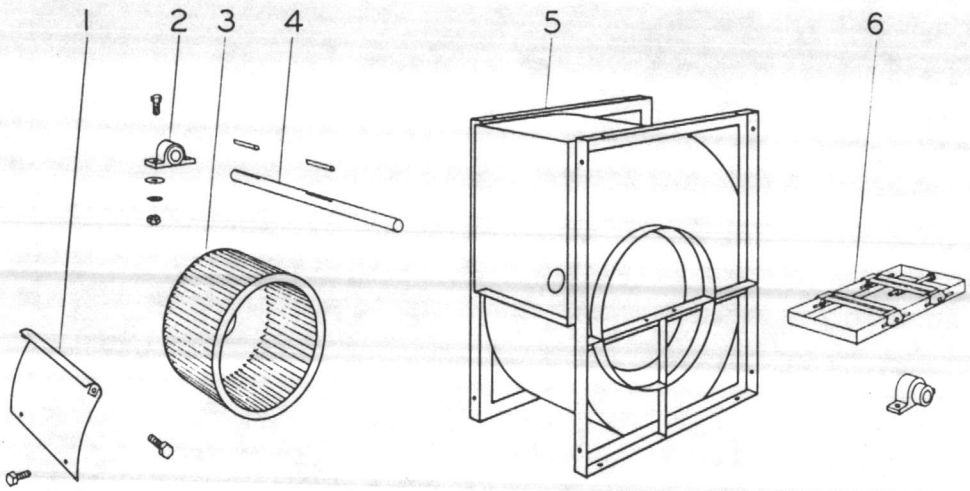

MODEL NO.	ITEMS					ACCESSORY
	1	2	3	4	5	6
	CUTOFF	BEARING	WHEEL	SHAFT	HOUSING	MOTOR MT.
SX2110A201	5721401	8001922	3020450	5619808	2021406	9018204
SX2412A201	5724401	8001922	3024452	5619810	2024405	9018204

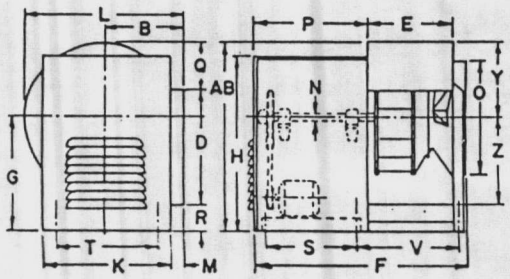

FIG. NO. 1 BOTTOM

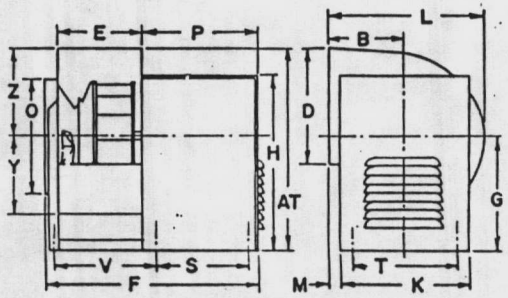

FIG. NO. 2 TOP

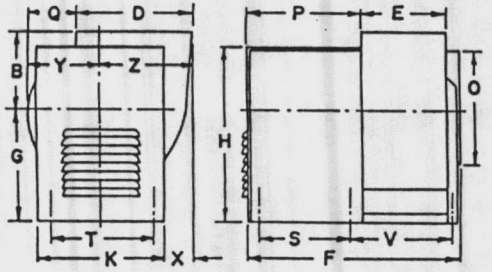

FIG. NO. 3 UP BLAST

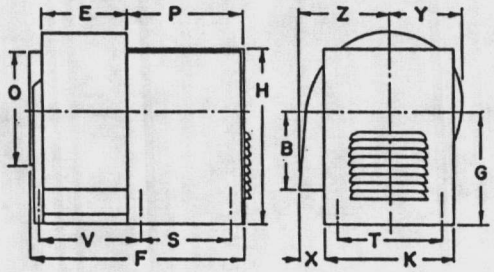

FIG. NO. 4 DOWN BLAST

MODEL	AB	AT	B	D	E	F	G	H	K	L	M	N
BI-13	34¼	38¼	10¾	14⅜	10¾	32 1/16	24	33 1/16	16½	22½	2½	1
BI-16	36½	41¾	12¾	17⅝	13⅛	35 1/16	24	33 1/16	16½	26⅞	4½	1 3/16
BI-18	37¾	43¼	13⅞	19⅜	14½	36 1/16	24	33 1/16	16½	29⅝	5⅜	1 3/16
BI-20	44⅞	50⅞	15	21¼	15¾	44 1/16	29¾	42 1/16	25	32¼	2½	1 3/16
BI-22	46⅝	53¼	16⅜	23⅝	17⅝	46 1/16	29¾	42 1/16	25	35⅝	3⅞	1 3/16
BI-24	53	60⅝	17⅞	26	19⅜	49 1/16	34½	49 1/16	29	39	3⅜	1 1/16
BI-27	54⅞	62¾	19½	28⅝	21¼	51 1/16	34½	49 1/16	29	42¾	5	1 1/16

MODEL	O	P	Q	R	S	T	V	X	Y	Z	WHEEL DIA.
BI-13	14⅜	20 1/16	10⅛	9¾	16¼	15	13¾	6	10¼	14¼	13½
BI-16	17⅜	20 1/16	12¼	6⅝	16¼	15	16⅛	9⅛	12½	17⅜	16½
BI-18	19⅜	20 1/16	13⅝	4¾	16¼	15	17½	11	13¾	19¼	18¼
BI-20	21¼	25 1/16	15	8⅝	22	22¼	18½	8⅝	15⅛	21⅛	20
BI-22	23⅝	25 1/16	16¾	6¼	22	22¼	20⅜	11	16⅞	23½	22¼
BI-24	26	28 1/16	18⅜	8⅝	25	26¼	22⅛	11⅜	18½	25⅞	24½
BI-27	28⅝	28 1/16	20¼	6	25	26¼	24	14	20⅜	28½	27

COUNTER CLOCKWISE ROTATION

Dimensions in inches Metric on reverse side

BLOWERS									MOTORS						PULLEYS		Belt
Mark	Model	Qty.	Fig. No.	Flow	Outlet	SP PS	Power	RPM TPM	Power	Frame	Volts	Hz	PH	RPM TPM	Blower	Motor	Length
	BI-13	4	1	2000		3"		2190									

AIR FLOW IN:

STATIC PRESSURE IN:

VELOCITY IN:

MOTOR POWER IN:

JOB: Applied Instruction N62470-84C-4087
PROJECT: Camp Lejeune, N.C.
CONTRACTOR: Sheedon
SUPPLIER:
ENGINEER: Chet NieDziela

DELHI INDUSTRIES LTD.
DELHI, ONTARIO, CANADA

SERIES BI

DATE SUBMITTED:

SD-11

BREIDERT

AN ESSICK AIR PRODUCT

TYPE CX–12" thru 48" – APPROVAL SHEET

BELT DRIVE — CENTRIFUGAL IMPELLER

ALUMINUM CONSTRUCTION — DIMENSIONS & MATERIALS CORRECT FOR INSTALLATION

The G.C. Breidert Company certifies that the Type CX Belt Drive units shown herein are licensed to bear the AMCA Seal. The ratings shown are based on tests made in accordance with AMCA Standard 210 and comply with the requirements of the AMCA Certified Ratings Program. Performance shown is for Type CX Belt Drive units with or without ducts. The AMCA Certified Ratings Seal applies to air capacities only.

	BELT DRIVE									
SIZE	A	B	C	D	E	F	DAMPER	1	2	3
12	30¼	24½	24	3¾	2½	4⅞	12x12	.040	.063	.063
15	30¼	24½	24	3¾	2½	4⅞	12x12	.040	.063	.063
18	34½	27¾	29½	5¼	2½	4⅞	18x18	.080	.080	.070
24	44	30½	35½	7½	2½	4⅞	24x24	.080	.090	.070
30	61	40	42½	10	2½	4⅞	34½x34½	.090	.102	.090
36	61	40	42½	10	3½	4⅞	34½x34½	.090	.102	.090
42	73	48¾	55	12¾	2½	4⅞	47x47	.090	.102	.102
48	73	48¾	55	12¾	2½	4⅞	47x47	.090	.102	.102

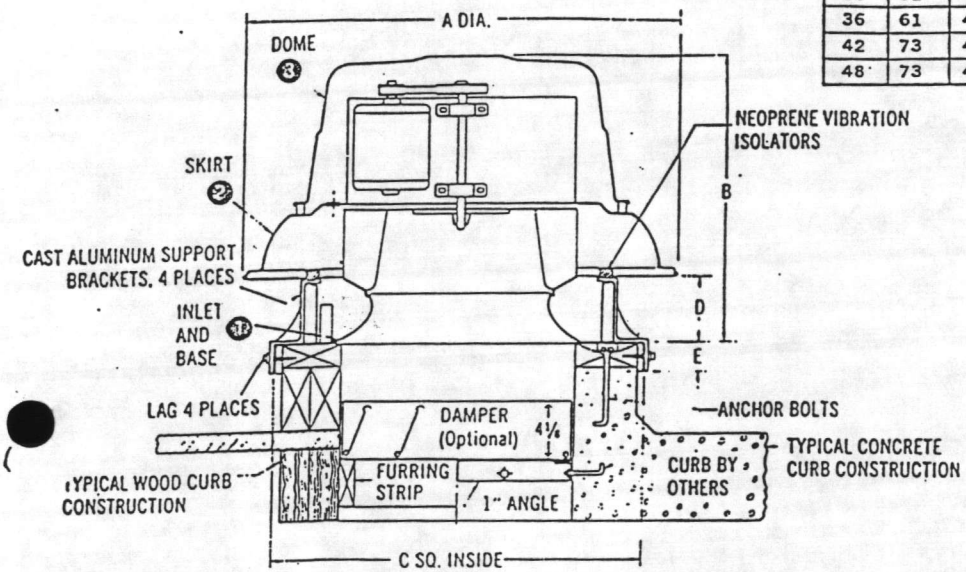

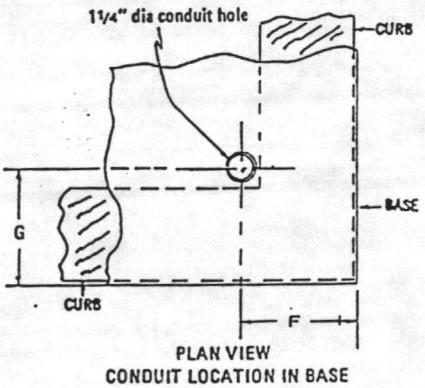

CUSTOMER	
JOB NAME	Applied Instruction N62470-84C-4087
CONTRACTOR	Sneedon
ARCHITECT	
ENGINEER	Chet Niedziela
SUBMITTED BY	W. A. Wood & Assoc. ORDER NO. DATE

SPECIFICATIONS:

QTY	UNIT #	MODEL #	CFM	S.P.	BHP	FAN RPM	MOTOR DATA				ACCESSORY
							HP	VOLTS/CY/PHASE	RPM	ENCL	
1	TE-1	CX1815	1360	1/2"	1/4	715	1/4	115/60/1	1725		B.S., B.D.D.S.
2	E-2& E-3	CX4249	17,700	1/4"	3	405	3	230/60/3	1740		B.S., B.D.D.S.

5800 Murray Street Little Rock, Arkansas 72209
800-643-8341 / 501-562-1094

Applied Instruction
N 65470-84C-4087

Low Pressure Direct Drive Fan

Model BWC24CC

SERIES **BWC**

FEATURES:

- **Built-in OSHA Safety Guard**
- **Totally Enclosed Two Speed Motor**
- **Ball Bearing Motor**
- **Two Speed Wall Switch Furnished**
- **Attractive Enamel Finish**
- **Vertical or Horizontal Installation**
- **Available with Speed Control**

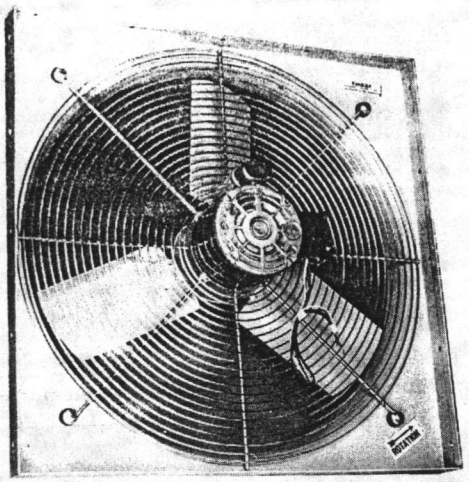

APPLICATION — These direct drive, low pressure type fans are specially intended for the rapid removal of smoke, steam, heat and fumes and for general ventilation from stores, factories, mills, storage plants and most commercial and industrial applications. Designed for continuous operation and the moving of large volumes of air at low cost, the fan is most practical for use at static pressures up to .25".

PROPELLERS — Precision balanced heavy steel blades are die stamped and die formed to assure perfect alignment. These blades exhibit non-overloading operating characteristics and thus assure relatively constant power consumption even with changing loads. Propellers and locked directly to the shaft of the drive motor.

FRAMES — Square, easy to install frames with wide mounting flanges are built from a heavy one piece deep drawn steel panel, incorporating a true venturi orifice.

MOTOR — Standard NEMA design ball bearing induction type motors are used on all units and are totally enclosed, two speed 115 volt single phase.

PROTECTIVE COATING — Epcote (epoxy) coating provides good protection against most corrosive agents.

FAN WILL ACCEPT
DIAL SPEED
CONTROL

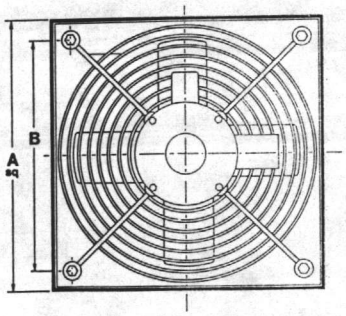

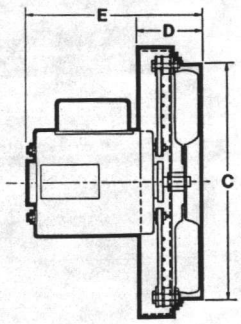

DIMENSIONS

SIZE	12	16	20	24
A	14 1/2	18 1/2	23	27 1/2
B	12 9/16	15 9/16	20 3/4	20 3/4
C	12 1/2	16 1/2	20 1/2	24 1/2
D	3	3	3 1/2	4
E	7	7	8	8

Dimensions shown are approximate. Certified dimension prints available on request.

PERFORMANCE DATA

Cat. No.	Motor HP	Fan RPM	Free Air	CAPACITY — CFM 1/10"SP	1/8"SP	1/4"SP	L_wA db (ref. 1 picowatt)	Ship. Wgt.	Wall Louver Automatic/Motorized	Guard Propeller Side
BWC12AC	1/8	1150	890	700	620		70	20	ALWL12/ALWP12	GD12F
		850	660	370			65			
BWC12AA	1/8	1750	1370	1260	1230	1050	77	20		
		1150	890	700	620		70			
BWC16BC	1/6	1150	1990	1690	1600	780	73	30	ALWL16/ALWP16	GD16F
		850	1470	960	770		66			
BWC16CA	1/4	1650	2845	2550	2510	2200	84	30		
		1150	1990	1690	1600	780	73			
BWC20CC	1/4	1150	3360	2980	2760	2050	76	40	ALWL20/ALWP20	GD20F
		850	2470	1890	1660	620	68			
BWC24CC	1/4	1150	4440	4020	3900	2900	78	50	ALWL24/ALWLP24	GD24
		850	3380	2690	2400	1200	69			

Fans tested in accordance with AMCA Standard 210

L_wA tested in accordance with AMCA Standard 300

OPTIONAL ACCESSORIES

E-1

TAB PLACEMENT HERE

DESCRIPTION:

10.

☐ Tab page did not contain hand written information

☑ Tab page contained hand written information
*Scanned as next image

Confidential Records Management, Inc.
New Bern, NC
1-888-622-4425
9/08

Honeywell

ENGINEERING DATA FOR

JOB NAME: Applied Instruction Bldg.

JOB NUMBER : 939-87611

ENGINEER: Rick Manaloto

OPERATION AND MAINTENANCE

LP914A	Per Spec. 2.1.5.1
L480G	Per Spec. 2.1.9.7
V5011C	Per Spec. 2.1.2
MP953D	Per Spec. 2.1.3
VP525A	Per Spec. 2.1.2
VP531A	Per Spec. 2.1.2
AK3485D	Per Spec. 2.2.1
TP971A	Per Spec. 2.1.9.1
T451A/651A	Per Spec. 2.1.9.3
RP972A	Per Spec. 2.1.17
RP920A,D	Per Spec. 2.1.4
RP418B	Per Spec. 2.1.17

HONEYWELL INC., 517 SOUTH SHARON AMITY ROAD (ZIP 28211)
P.O. BOX 220487 (ZIP 28222) CHARLOTTE, NORTH CAROLINA, TELEPHONE 704/364-4770

Honeywell

Comfort Control Systems

V5011A-E & V5013A-E VALVE BODIES

Service Data

GENERAL

DESCRIPTION

The V5011 are single-seated, two-way, straight-through valves. The V5013 are three-way mixing or diverting valves

APPLICATION

The V5011 Valves proportionally control hot or chilled water, or steam in HVAC systems requiring tight shutoff. Figure 1 shows average flow characteristics.

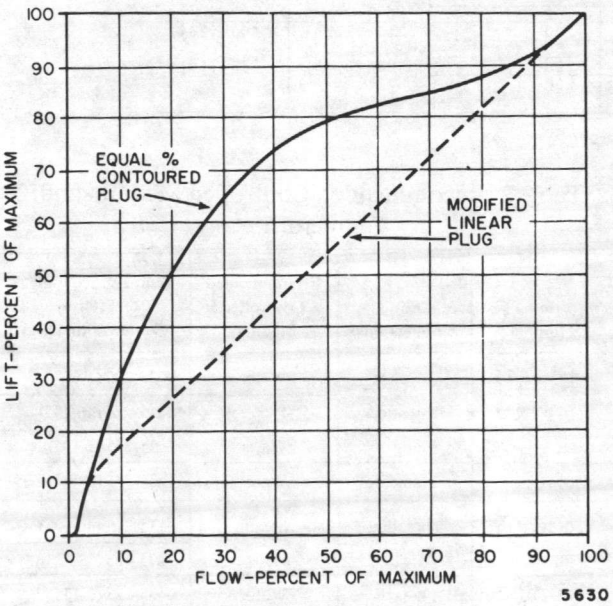

Fig. 1. V5011 Average Flow Characteristics.

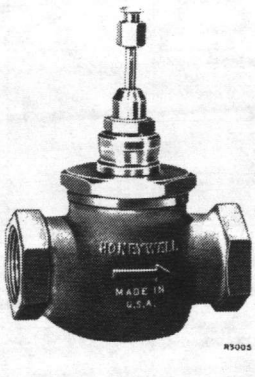

V5011

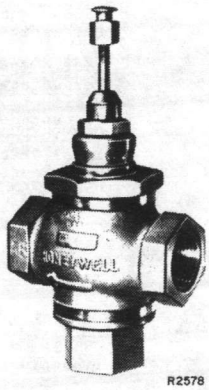

V5013

The V5013 provides proportional or two-position control of hot or cold water in heating or cooling systems. They can be used for mixing service to direct flow from one of two inlets to a common outlet, or for diverting service to direct flow from a common inlet to one of two outlets.

These valves are actuated in a pneumatic system by a properly sized MP953 Pneumatic Valve Actuator. In an electric/electronic system, a Modutrol motor with Q601 or Q618 Valve Linkage is used to actuate the valve. For high pressure applications, an industrial Type 01-15 or 01-18S Spring Actuator is required for the V5013D and E.

It is possible to convert standard V5011A & B or V5013A-C for use on 200 psi hot or cold water systems.

SPECIFICATIONS

See Table 1 for model descriptions and body specifications.

Table 1. V5011 and V5013 Model Description and Body Specifications.

Model Number and Plug Characteristic	Action ⚠1	End Connections	Body Size in Inches	Capacity Index (Cv)	Nominal Body Rating Pressure psi (kPa)	Nominal Body Rating Temperature F (C)
V5011A Equal Percentage and V5011C Linear	Direct	Female NPT threaded	1/2	0.4,0.63,1.0, 1.6,2.5,4.0	150 (1034) or 200 (1379)	366 (186) or 150 (66)
			3/4	6.3		
			1	10		
			1-1/4	16		
			1-1/2	25		
			2	40		
			2-1/2	63		
			3	100		
V5011A Equal Percentage	Direct	Flanged	2-1/2 or 3	63; 2-1/2 in. 100; 3 in.	125 (860) or 175 (1207)	353 (178) or 150 (66)
V5011D Equal Percentage					250 (1725) or 400 (2758)	400 (204) or 150 (66)
V5011A Equal Percentage	Direct	Flanged	4,5, or 6	160; 4 in.	125 (860) or 175 (1207)	353 (178) or 150 (66)
V5011B Equal Percentage	Reverse					
V5011D Equal Equal Percentage High Pressure	Direct			250; 5 in.	250 (1725) or 400 (2758)	400 (204) or 150 (66)
V5011E Equal Percentage High Pressure	Reverse			360; 6 in.		
V5013A Linear Flow	Mixing	Female NPT threaded	1/2	1.5, 4.0	150 (1034)	240 (116)
			3/4	6.3		
			1	10		
			1-1/4	16		
			1-1/2	25		
			2	40		
V5013A (inactive)	Mixing	Flanged	2-1/2	63	150 (1034)	240 (116)
			3	100		
			4	160		
			5	250		
			6	360		
V5013B Linear Flow	Mixing	Flanged	2/1/2	63	150 (1034)	250 (121)
V5013C Linear Flow	Diverting		3	100		
V5013D Linear Flow	Mixing		4	160	250 (1724) or 400 (2758)	400 (204) or 150 (66)
			5	250		
			6	360		
V5013E Linear Flow	Diverting		8	600		

⚠1 Direct - stem down to close, reverse - stem up to close.

STEM TRAVEL:

1/2- to 3-in. valves: 3/4 in. (19 mm).

4-, 5-, and 6-in. valves: 1-1/2 in. (38 mm).

8-in. valves: 2 in. (51 mm).

RECOMMENDED CONTROLLED MEDIUM AND TEMPERATURE: See Table 2.

SEAT:

V5011:

Threaded bodies—brass (replaceable, screwed into body).

Threaded bodies, metal-to-metal stainless steel (recommend replacing valve).

Flanged bodies—bronze (replaceable, screwed into body).

V5013:

V5013A: Integral brass.

V5013B-E: Bronze, removable cage type.

Table 2. Recommended Controlled Medium and Temperature.

Model Number	End Connections	Recommended Controlled Medium	Temperature Range F(C) (Composition Disc)
V5011A & D	Threaded	Water	35-200 (2-99)
		Water	115-275 (46-135)
	Flanged	Water	35-275 (2-135)
V5011B	Flanged	Water	35-275 (2-135)
V5011C ⚠1	Threaded	Steam	115-275 (46-135)
			275-425 (135-218)
V5011D	Flanged	Water	35-275 (2-135)
V5011E	Flanged	Water	35-275 (2-135)
V5013A	Threaded	Water	⚠2
V5013A	Flanged		
V5013B-E	Flanged		

⚠1 Metal-to-metal seats available in 1/2 to 1-1/2 valve sizes.

⚠2 Metal-to-metal seats, no composition disc temperature limitation but the packing is the limiting factor.

PACKING LIMITATIONS:

V5011A & C (Teflon Cone Packing):

Water: 150 psi at 250F max. (1034 kPa at 121C), 40F min.(4C).

Steam: 100 psi at 337F max. (680 kPa at 169C).

V5011D & E (Teflon V-ring Packing and 14002920-002 Packing Kit):

Water: 250 psi at 250F max. (1725 kPa at 121C), 40F min. (4C).

V5013A:

Hot Water Service: 100 psi (689 kPa) max. pressure, 40F (4C) min. and 240F (116C) max. temperatue.

Alternate Hot and Cold Water Service: 100 psi (689 kPa) max. pressure, 240F (116C) max. temperature.

V5013B & C:

Hot Water Service: 100 psi (689 kPa) max. pressure; 240F (116C) max. temperature.

Cold Water Service: 150 psi (1034 kPa) max. pressure, 40F (4C) min. temperature.

Alternate Hot and Cold Water Service: 150 psi (1034 kPa) max. pressure, 240F (116C) max. and 40F (4C) min. temperature, 140F (60C) max. differential temperature.

V5013D & E:

Alternate Hot and Cold Water Service: 140F (60C) max. differential temperature.

DISC AND PLUG:

V5011:

Disc: Removable composition.

Disc Holder:

Threaded bodies—brass.

Flanged bodies—cast iron.

Plug:

Threaded bodies with composition disc—contoured brass.

Threaded bodies with metal-to-metal seating—contoured stainless steel.

Flanged bodies—V-ported, skirt guided bronze.

V5013:

V5013A: Linear contour plug, one-piece brass construction for metal-to-metal seating.

V5013B-E: Bronze skirted plug.

CLOSE OFF RATINGS: See Table 3 and Figures 2, 3, and 4.

Table 3. Close-Off Ratings with Electric Actuators.

Model No.	Close-Off Ratings psi (kPa) Linkage Seal-Off Force 160 lb (711 N) ⚠1	80 lb (356 N) ⚠2	Cv	Body Size in Inches
V5011A & C Threaded Connection	150 (1034)	150 (1034)	0.40 0.63 1.0 1.6 2.5 4.0	1/2
	150 (1034)	122 (840)	6.3	3/4
	150 (1034)	106 (731)	10.0	1
	141 (970)	60 (414)	16.0	1-1/4
	91 (627)	39 (269)	25.0	1-1/2
	55 (379)	22 (152)	40.0	2
	32 (221)	12 (83)	63.0	2-1/2
	20 (138)	8 (55)	100.0	3
V5011A & D Flanged	26 (179)	10 (69)	63.0	2-1/2
	20 (138)	7 (48)	100.0	3
	10 (69)	not recom-	160.0	4
	6 (41)	mended for	250.0	5
	4 (28)	close-off	360.0	6
V5011B & E Flanged	10 (69)	not recom-	100.0	4
	6 (41)	mended for	250.0	5
	4 (28)	tight close-off	360.0	6
V5013A Threaded	150 (1034)	140 (965)	2.5	1/2
	150 (1034)	130 (895)	4.0	1/2
	150 (1034)	120 (830)	6.3	3
	150 (1034)	70 (485)	10.0	1
	146 (1007)	50 (345)	16.0	1-1/4
	98 (675)	35 (240)	25.0	1-1/2
	67 (460)	20 (140)	40.0	2
V5013A Flanged	32 (220)	not recom-	63.0	2-1/2
	22 (150)	mended for	100.0	3
	9 (60)	tight close-off	160.0	4
			250.0	5
			360.0	6
V5013B & D Flanged	32 (220)	not recom-	63.0	2-1/2
	22 (150)	mended for	100.0	3
	9 (60)	tight close-off	160.0	4
			250.0	5
			360.0	6
			600.0	8
V5013C & E Flanged	32 (220)	not recom-	63.0	2-1/2
	22 (150)	mended for	100.0	3
	9 (60)	tight close-off	160.0	4
			250.0	5
			360.0	6
			600.0	8

⚠1 160 lb—Q618A (160 lb model); Q601D,E,J,K; Q455B,D,D.

⚠2 80 lb—Q618A (80 lb model), Q601F,G,H,I,M; Q455A,E,F,G.

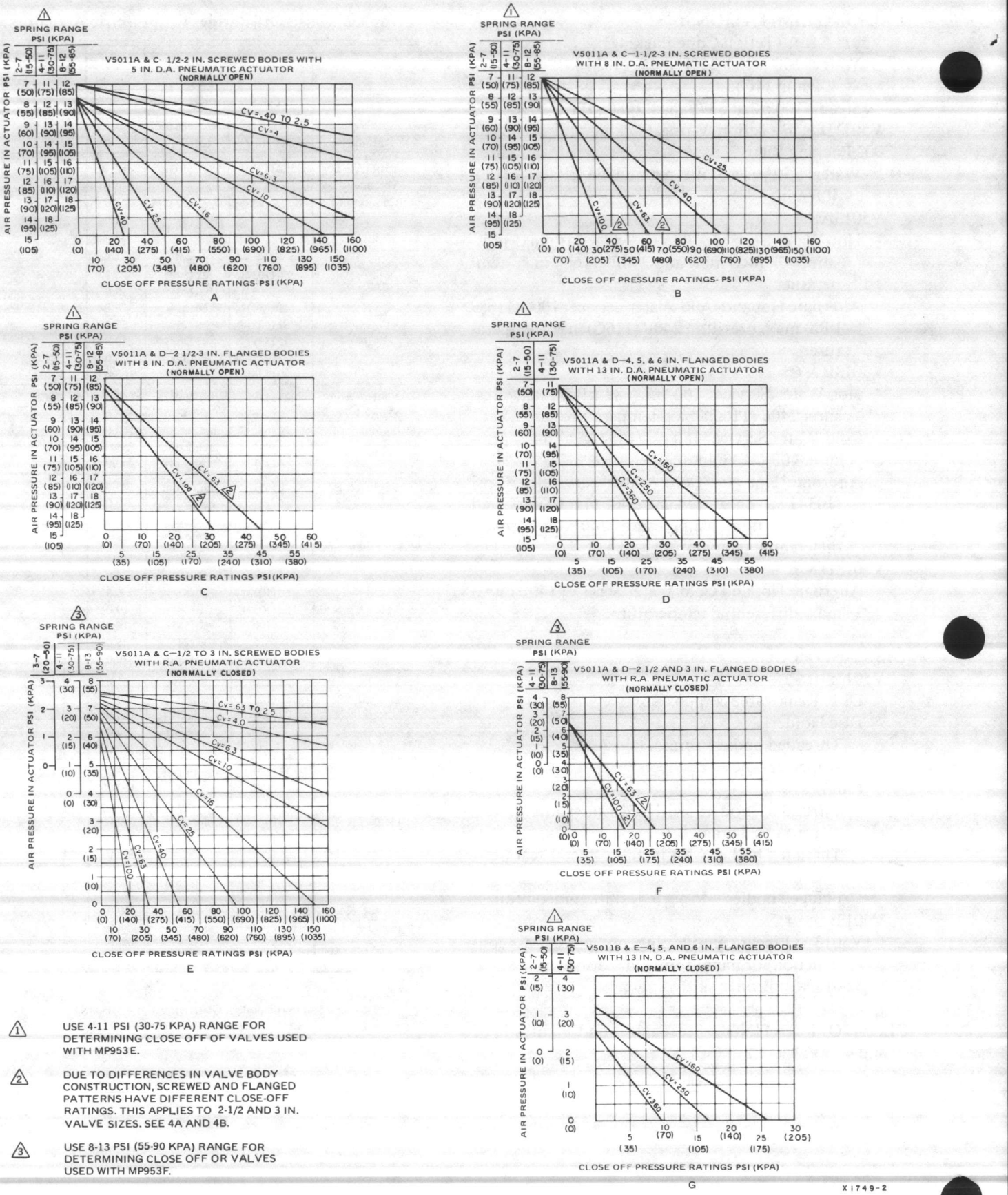

1. USE 4-11 PSI (30-75 KPA) RANGE FOR DETERMINING CLOSE OFF OF VALVES USED WITH MP953E.

2. DUE TO DIFFERENCES IN VALVE BODY CONSTRUCTION, SCREWED AND FLANGED PATTERNS HAVE DIFFERENT CLOSE-OFF RATINGS. THIS APPLIES TO 2-1/2 AND 3 IN. VALVE SIZES. SEE 4A AND 4B.

3. USE 8-13 PSI (55-90 KPA) RANGE FOR DETERMINING CLOSE OFF OR VALVES USED WITH MP953F.

Fig. 2. Close-Off Pressures at Various Control Air Pressures for V5011A-E Single-Seated Valves and MP953 Pneumatic Actuators.

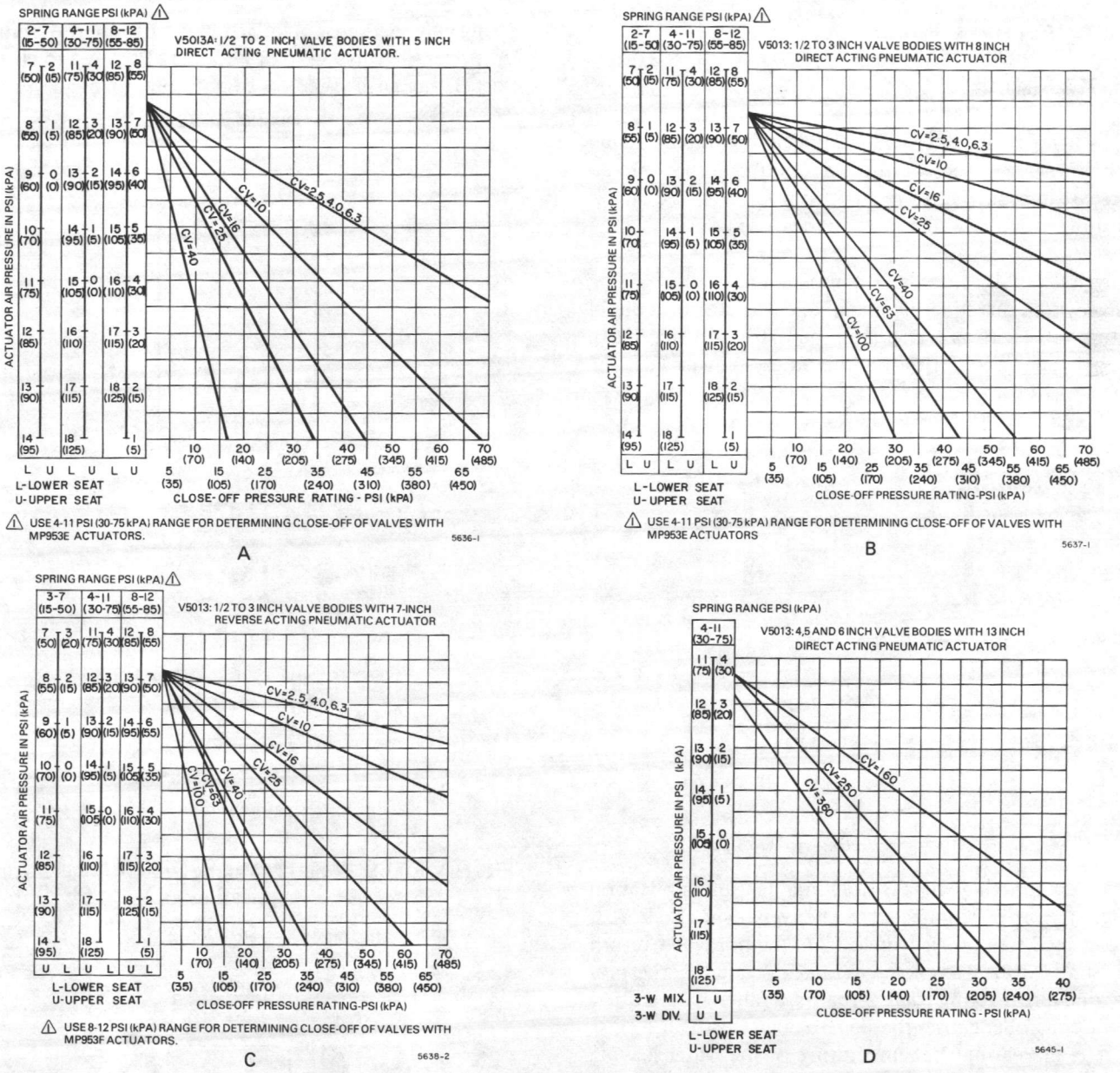

Fig. 3. V5013 Close-Off Rating vs Control Air Pressure for MP953 Actuators.

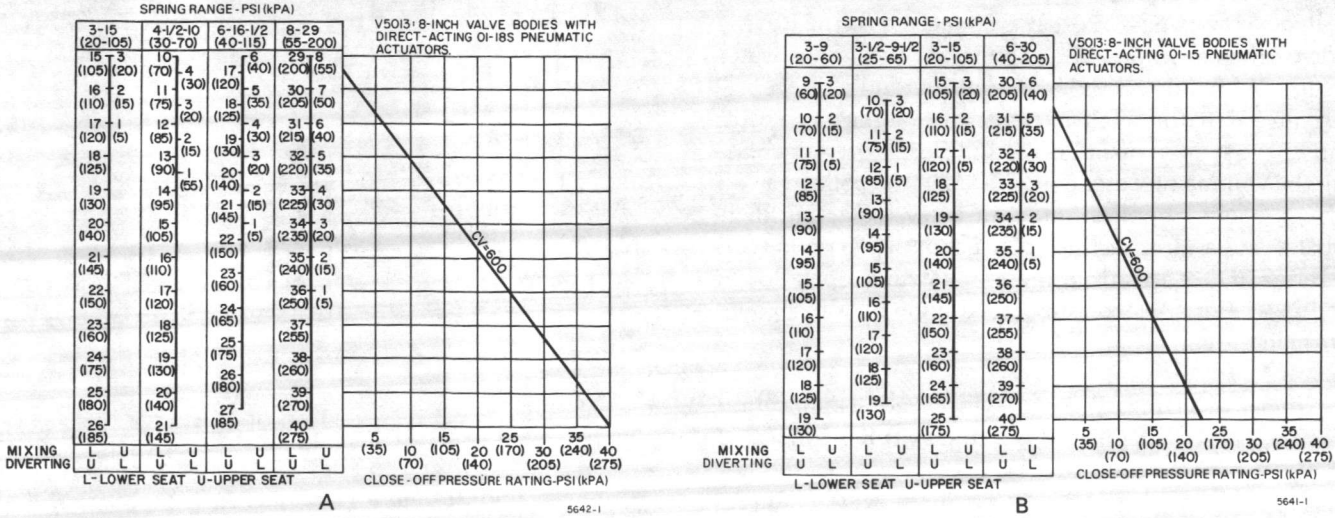

Fig. 4. V5013 Close-Off Ratings vs Control Air Pressures for Type 01 Actuators on 8-Inch Valve Bodies.

OPERATION

V5011A-E (Fig. 5)

In a normally open valve application (direct acting valve with a direct acting pneumatic actuator), an increase in branch line pressure from a sensor or controller moves the valve stem toward the closed position.

In a normally closed valve application (reverse acting valve with a direct acting pneumatic actuator or a direct acting valve with a reverse acting actuator), an increase in branch line pressure moves the valve stem toward the open position.

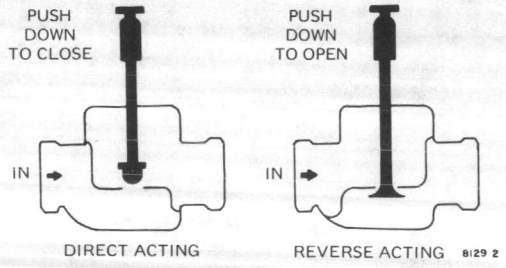

Fig. 5. Typical V5011 Operation.

V5013A-E

When a mixing valve is used in a heating application (Fig. 6), Port B is connected to a hot water supply. Port A is conected to a boiler bypass from the hot water return line, and Port AB to a load. With a direct acting thermostat and direct acting valve actuator, a fall in temperature at the controller causes the stem to open Port B and close Port A increasing the temperature of the water leaving the valve.

In a coil bypass heating application, Port A is connected to the bypass. Port B is connected to the leaving side of the coil. Port AB is connected to the hot water return. With a direct acting thermostat and a direct acting valve actuator, a fall in temperature at the thermostat causes the stem to open Port B and close Port A increasing the volume of water going through the coil. In a coil bypass cooling application, with a reverse acting thermostat and a direct acting valve actuator, a rise in temperature at the thermostat causes the stem to open Port B and close Port A increasing the volume of water going through the coil.

When a diverting valve is used in a heating application (Fig. 7), Port A is connected to a coil. Port B is connected to a coil bypass, and Port AB is connected to the hot water supply. With a direct acting thermostat and direct acting valve actuator, a fall in temperature at the controller moves the valve stem up, opening Port A and closing Port B, increasing the flow of hot water through the coil.

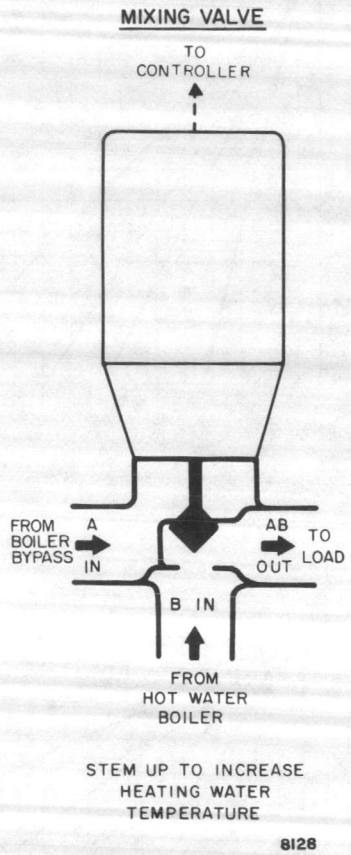

Fig. 6. V5013A, B, and D Mixing Valve - Boiler Bypass Application.

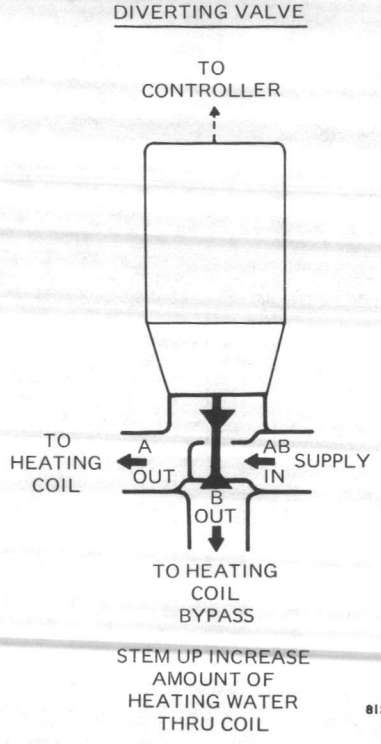

Fig. 7. V5013C and E Diverting Valve Operation.

MAINTENANCE

EQUIPMENT REQUIRED

Commercial cleaning solvent or degreaser.

INSPECTION

1. For all body types, inspect top of packing gland around stem.
   Repack if leakage occurs. Refer to REPAIR section for repacking instructions.
2. For flanged body types, inspect adapter flange, gasket, and body plug. Tighten bolts and/or body plug.

CLEANING

Using solvent, remove all dirt and grease accumulation around the packing nut and stem.

⚠ WARNING ⚠

Special care should be exercised in the use of solvents. Avoid prolonged inhalation and/or contact with the skin. Careless handling can result in permanent damage to the respiratory system or skin tissue.

OPERATIONAL CHECK

Increase branchline pressure for a direct acting valve and check that the valve closes. Decrease branchline pressure for a reverse acting valve and check that the valve closes.

REPAIR

EQUIPMENT REQUIRED

— Wrench, 1/8 in. Hex, for stem button and setscrew.
— Wrench, seat removal tool for threaded type V5011:

Valve Size	Wrench Size
1/2 in. NPT	— Std 7/8 in. thin wall socket
3/4 in. NPT	— Std 1 in. thin wall socket
1 in. NPT	— Std 1-1/8 in. thin wall socket with O.D. turned down to 1.49 in.
1-1/4 in. NPT	— Std 1-3/8 in. thin wall socket
1-1/2 in. NPT	— Std 1-5/8 in. thin wall socket
2 in. NPT	— Valve seat removal tool 947
2-1/2 in. NPT	— Valve seat removal tool 948
3 in. NPT	— Valve seat removal tool 949

— Plastilube No. 2 lubricant 311057 for stem and Teflon packing (2 oz. tube).
— CD100 lubricant 309535 for stem and rubber packing.

GENERAL

If leakage occurs after several years of operation, it is recommended to completely rebuild the valve, replacing all parts subject to wear. This normally includes packing, stem, disc, internal springs, seats or seat rings, O-rings, and gaskets as applicable to the valve being rebuilt. See PARTS LIST in PARTS AND ACCESSORIES section for repair and rebuild part numbers.

Any valve with a stem that is still in good condition may be repacked without further repair. It is possible to repack the valve without removing the bonnet. When repacking, great care should be taken not to damage the valve stem or leakage may still occur after the new packing is installed.

After repairing, use pipe sealing compound or tape on bonnet threads and screwed piping connections. Restore steam or hot water pressure to test for leaks before reinstalling actuator. Remember that pressure forces the valve open during testing when actuator is off. Reinstall the actuator and check operation to be certain valve closes completely against normal operating pressures.

VALVE REPACKING

1. Relieve steam or water pressure from system and remove valve actuator.
2. Hold Stem by inserting 1/16 in. diameter rod or nail in hole near the top of stem. Unscrew Button. Do not tamper with top locking Setscrew in Button. Also remove Stem Extension if applicable.
3. Remove Packing Gland, old Packing, Packing Follower, and Spring. Install new Spring and Packing Follower.
   Use a small amount of lubricant and thread new Packing very carefully over the Stem with concave side down for 250 psi (1724 kPa) packing (rubber), concave side up for Teflon packing.

4. Reinstall Packing Gland by pushing down to compress Spring until threads engage, and tighten until snug. Be certain the valve stem moves up and down. Reinstall Button, Stem Extension (if applicable), and actuator.

VALVE REBUILDING

GENERAL

Follow DISASSEMBLY PROCEDURES as applicable. Replace all parts subject to wear and damage. Reassemble in reverse order using new parts.

CAUTION

Do not tighten capscrews on flanged valves beyond recommended torque (Table 4).

Table 4. Bonnet Torque Down Value for Capscrews.

Screw Size	Recommended Torque, lbs-ft
7/16-14 UNC	15-25
1/2 -13 UNC	30-40
9/16-12 UNC	50-70
5/8 -11 UNC	70-100
3/4 -10	120-170

NOTE: Run down all bonnet capscrews until finger tight, then proceed to torque down evenly using a reduced torque. Space successive tightening at 180 degrees, etc, until the bonnet raised face contacts the body on all sides. Then apply torque as specified above.

DISASSEMBLY PROCEDURES

1. Relieve steam or water pressure from system and remove actuator.
2. Hold Stem by inserting 1/16 in. diameter rod or nail in hole near top. Unscrew Button. Do not tamper with top locking Setscrew in Button. Also remove Stem Extension (if applicable).
3. Remove Packing Box Nut and all parts down to Bonnet.
4. Remove Stem and Plug.
   a. V5011A & C Direct Acting Threaded Body Valves. Unscrew the Bonnet. The Stem or Stem and Disc Holder Assy. and the Plug can then be lifted out (Fig. 8).
   b. V5013A Threaded Body Valves. Unscrew the lower port from body to remove Stem and Plug (Fig. 9). This requires removing valve from line.
   c. V5011A & D Direct Acting Flanged Body Valves. Remove the Bonnet (and Adapter Flange in older valves) that is attached with Mounting Screws (Fig. 10). Lift out the Stem and Plug.
   d. V5011B & E Reverse Acting Flanged Body Valves. Unscrew the Bonnet. The Stem and Plug cannot be removed until the Adapter Flange at the bottom of the valve is removed by unscrewing the Mounting Screws (Fig. 11).
   e. V5013A Flanged Body Valves. Valve must be removed from line. Unscrew the Bonnet (Fig. 12). Remove the Lower Seat Outlet with Lower Seat Ring after removing Cap Screws. Stem and Plug can now be removed.
   f. V5013B-E Flanged Body Valves. Detach the Bonnet by removing mounting screws. Unscrew the Upper Seat Ring so the Stem and Plug can be lifted out. The Lower Seat Ring can then be removed through the bonnet opening (Fig. 12).
5. Disassemble Stem and Plug.
   a. V5011 Threaded Body Valves. Unscrew Plug (Fig. 8) from Stem to remove Disc and Spring. The Disc may have to be pried from the Disc Holder with a screwdriver. Valves that are 1-1/2 inch or larger have separate Stem and Disc Holder. Smaller valves have a staked Stem and Disc Holder Assembly (Fig. 13). The Stem and Plug cannot be disassembled on valves with metal-to-metal seats.
   b. V5013A Threaded Body Valves. Remove the lower Plug and O-ring from Throttling Plug with screwdriver, thereby releasing Stem Support and Spring (Fig. 9). To reassemble, tighten lower Plug against Stem Support and back off 1/4 turn.
   c. V5011 Flanged Body Valves. Remove the Locknut to release Disc Holder and Disc (Fig. 10). Detach the Stem by removing Pin.
   d. V5013 Flanged Body Valves. On older valves (V5013A), detach the stem from Throttling Plug by removing Pin. On later models (V5013B-E), the Plug is attached to the threaded end of the Stem with a Nut.

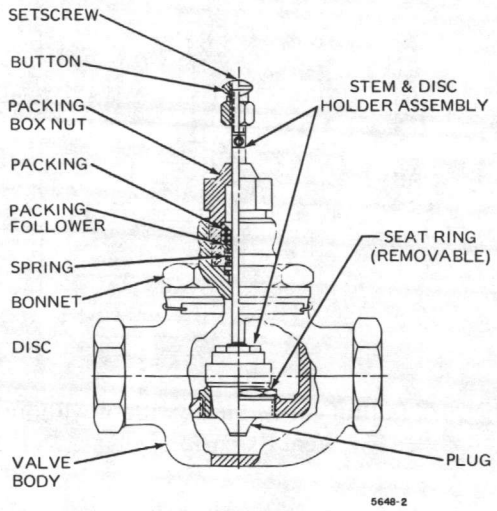

Fig. 8. Cutaway of V5011 Threaded Body Valve.

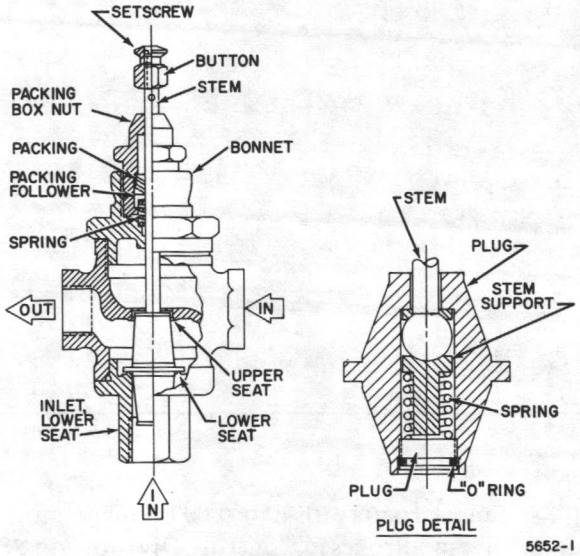

Fig. 9. Cutaway of V5013 Threaded Body Valve.

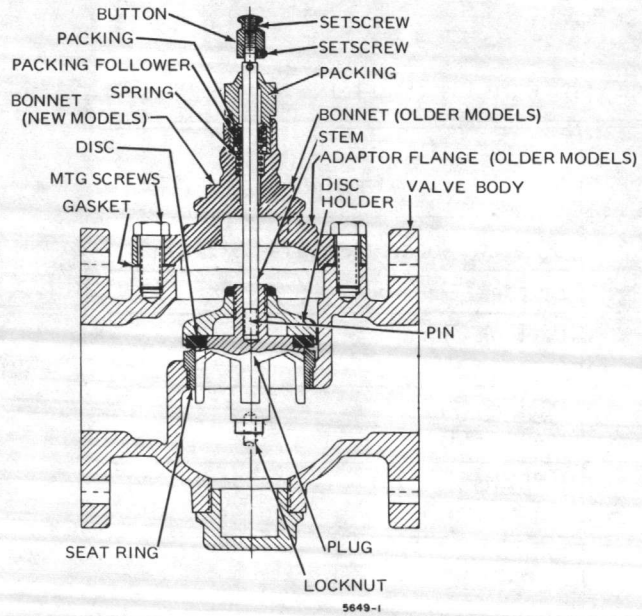

Fig. 10. Cutaway of Direct Acting Flanged Body Valve.

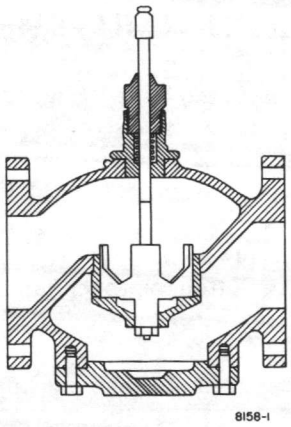

Fig. 11. Cutaway of Reverse Acting V5011 Flanged Body Valve.

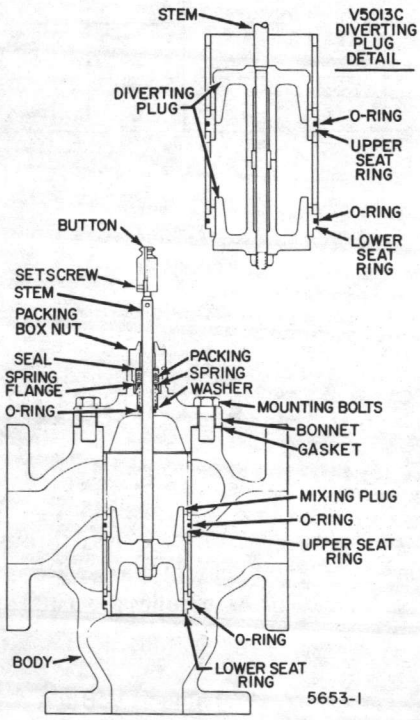

Fig. 12. Cutaway of V5013 B-E Flanged Body Valve.

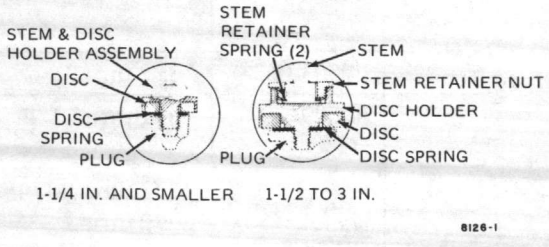

Fig. 13. Disc Holder Assemblies Used in V5011A Threaded Body Valves.

STEM BUTTON ADJUSTMENT

After valve repair, the Button (Fig. 14) probably will not have to be adjusted if setscrew wasn't removed or turned. If adjustment is necessary, check and adjust to the dimension listed in Table 5.

1. Loosen Setscrew.
2. Adjust Stem Button to proper dimension.
3. Tighten Setscrew.

Table 5. Stem Button Adjustment.

Valve Size	Stem Travel or "Lift"	Dimension in Inches (mm)			
		w/o Stem Extension		with Stem Extension	
		V5011 [1]	V5013 [2]	V5011 [1]	V5013 [2]
1/2 thru 3 in.	3/4 in. (19 mm)	3-1/2 (89)	3-1/2 (89)	5-1/4 (133)	5-1/4 (133)
2-1/2 thru 3 in.	3/4 in. (19 mm)	3-15/32 (88)	3-1/2 (89)	—	5-1/4 (133)
4 thru 6 in.	1-1/2 in. (38 mm)	5-1/4 (133)	5-1/4 (133)	7-9/16 (179)	7-9/16 (179)

[1] Dimension measured with valve closed (stem down on V5011A,C,D,E; stem up on V5011B).

[2] Dimension measured with plug against lower seat (V5013A).

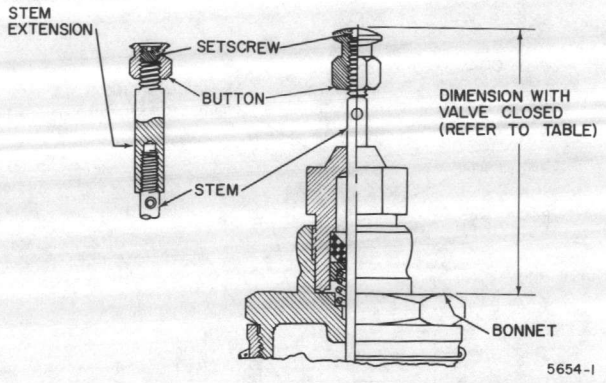

Fig. 14. Button Adjustment, with or without Stem Extension.

PARTS AND ACCESSORIES

PARTS LIST

See Figures 15 through 20 and Tables 6 through 11 for V5011 and V5013 replacement parts. Repack Kits, Rebuild Kits, and Repair Assemblies are listed at the end of the section. All parts with 30,000,000 numbers must be ordered from Process Control Division in Ft. Washington, Pennsylvania or their local Branch representatives.

Table 6. V5011A & C Threaded Type Valve Parts List (Fig. 15).

Key No.	Part No.	Valve Size in Inches	Cv	Description
1	—	—	—	Setscrew, Socket Head 1/4-28x1/4 in.
2	310503-062	1/2 thru 3	—	Button
3	310509 311431	1/2 thru 1-1/4 1-1/2 thru 3	— —	Packing Gland
4	310623 311432	1/2 thru 1-1/4 1-1/2 thru 3	— —	Packing (3) Packing (4)
5	310506 311430	1/2 thru 1-1/4 1-1/2 thru 3	— —	Follower
6	310498 311565	1/2 thru 1-1/4 1-1/2 thru 3	— —	Spring

Table 6. V5011A & C Threaded Type Valve Parts List (Fig. 15). (Continued)

Key No.	Part No.	Valve Size in Inches	Cv	Description
7	311080	1/2 & 3/4	—	Bonnet
	311081	1	—	↓
	310691	1-1/4	—	
	311622	1-1/2 & 2	—	
	311646	2-1/2	—	
	311648	3	—	
8	311620	1-1/2 thru 3	all	Stem Retainer Nut
9	311100	1-1/2 thru 3	10-100	Stem Retainer Spring, 3/4 in. travel (2)
			63-100	Stem Retainer Spring, 1-1/2 in. travel (1)
10	311093A	1/2 thru 1-1/4	0.40-4.0	Stem & Disc Holder Assy
	311094A		6.3, 10	
	311095A		16	
11	311619A	1-1/2 thru 3	10-100	Stem Assy, 3/4 in. travel
12	311633	1-1/2 thru 3	10	Disc Holder
	311392	↓	16	↓
	311433		25	
	311623		40	
	311745		63	
	311746		100	
13	313094	1/2 thru 1-1/4	0.40-4.0	Disc, 35-200F(0-93C)
	313102	↓	0.40-4.0	Disc, 115-275F(46-135C)
	313078		0.40-4.0	Disc, 275-425F(135-240C)
	313095		6.3, 10	Disc, 35-200F(0-93C)
	313103		6.3, 10	Disc, 115-275F(46-135C)
	313079		6,3, 10	Disc, 275-425F(135-240C)
	313096		16	Disc, 35-200F(0-93C)
	313104		16	Disc, 115-275F(46-135C)
	313080		16	Disc, 275 425F(135-2440C)
	313097		25	Disc, 35-200F(0-93C)
	313105		25	Disc, 115-275F(46-135C)
	313081		25	Disc, 275-425F(135-240C)
	313098		40	Disc, 35-200F(0-93C)
	313106		40	Disc, 115-275F(46-135C)
	313082		40	Disc, 275-425F(135-240C)
	313099		63	Disc, 35-200F(0-93C)
	313107		63	Disc, 115-275F(46-135C)
	313083		63	Disc, 275-425F(135-240C)
	313100		100	Disc, 35-200F(0-93C)
	313108		100	Disc, 115-275F(46-135C)
	313084		100	Disc, 275-425F(135-240C)
14	311099	1-1/2 thru 3	0.40-4.0	Disc Spring
	310554	↓	6.3, 10	↓
	311098		16	
	311100		25	
	311327		40	
	311725		63	
	311727		100	

Table 6. V5011A & C Threaded Type Valve Parts List (Fig. 15). (Continued)

Key No.	Part No.	Valve Size in Inches	Cv	Description
15	314706	1/2 thru 3	0.40	Plug, V5011A
	312349	↓	0.63	↓
	14000519-001		1.0	
	14000518-001		1.6	
	14000520-001		2.5	
	14000508-001		4.0	
	311087		6.3	
	311088		10	
	311091		16	
	311089		25	
	311146		40	
	311860		63	
	311861		100	
	314706		0.40	Plug, V5011C
	14000523-001		0.63	↓
	14000522-001		1.0	
	14000521-001		1.6	
	14000524-001		2.5	
	14000525-001		4.0	
	314533		6.3	
	314534		10	
	314535		16	
	314536		25	
	314537		40	
	314538		63	
	314539		100	
—	311728	↓	100	Plug Nut
16	310535	1/2	0.40-2.5	Seat
	311055	1/2	0.40	↓
	310536	3/4	2.5	
	310543	3/4	4.0	
	310890	3/4	6.3	
	310538	1	4.0	
	310537	1	6.3	
	311077	1	10	
	310540	1-1/4	6.3	
	310539	1-1/4	10	
	311078	1-1/4	16	
	310541	1-1/2	16	
	310542	1-1/2	25	
	311290	2	16	
	311291	2	25	
	311624	2	40	
	311730	2-1/2	40	
	311731	2-1/2	63	
	311733	3	63	
	311734	3	100	↓
17	—	1/2 thru 3	—	Valve Body

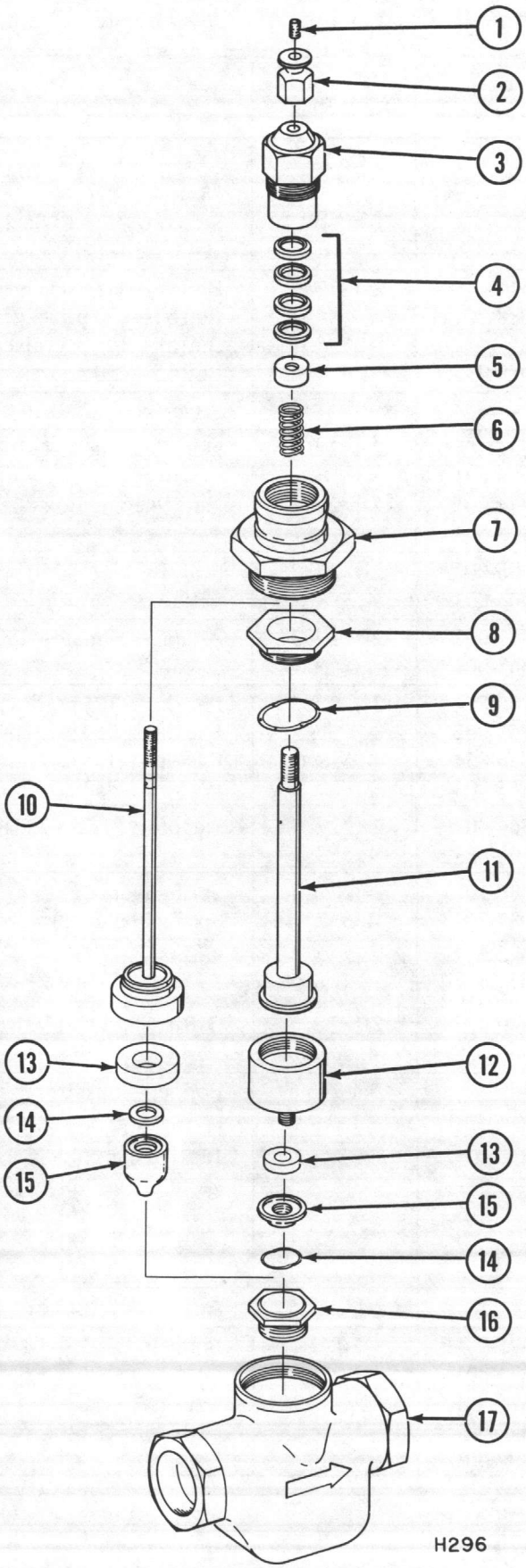

Fig. 15. V50llA & C Threaded Body Valves Exploded View.

Table 7. V5011 Direct Acting Flanged Valves (Fig. 16).

Key No.	Part No.	Valve Size in Inches	Description
1	—	—	Setscrew, Socket Hd (125 psi valves) 1/4-28x1/4 Setscrew, Cap Pt Socket (250 psi valves) 1/4-28x3/4
2	312495 30041088-107 312496 30041089-235	2-1/2 & 3 4, 5, & 6 	Button—125 psi valves Button—250 psi valves Button—125 psi valves Button—250 psi.valves
3	—	—	Setscrew, 8-32x3/16
4	30067857-107 30067858-001 30683374-001 30683135-002	2-1/2 & 3 4, 5, & 6 2-1/2 & 3 4, 5, & 6	Nut, Packing Box—125 psi Valves Nut, Packing Box—250 psi Valves
5	30682506-002 30682506-003	2-1/2 & 3 4, 5, & 6	Seal, Packing—250 psi Valves
6	30685567-002 30685567-003	2-1/2 & 3 4, 5, & 6	Adapter, Female—250 psi Valves
7	30041035-854 30685565-002 30681036-854 30685565-003	2-1/2 & 3 4, 5, & 6 	Packing—125 psi Valves (4), Teflon Packing—250 psi Valves (3), Rubber Packing—125 psi Valves (5), Teflon Packing—250 psi Valves (3), Rubber
8	30685566-002 30685566-003	2-1/2 & 3 4, 5, & 6	Adaptor, Male—250 lb Valves
9	30041086-107 30041087-107	2-1/2 & 3 4, 5, & 6	Spring Flange Spring Flange (2)
10	30041084-218 30041085-218	2-1/2 & 3 4, 5, & 6	Spring
11	30685440-026 30685440-025	2-1/2 & 3 4, 5, & 6	O-Ring—250 psi Valves
12	—	2-1/2 to 6	Bonnet—must be replaced by item 15
13	— — — — —	2-1/2 3 4 5 6	Hex Cap Flange Bolt, 1/2-13 x 1-1/4 in. (4) (6) (6) (8) (8)
14	—	2-1/2 to 6	Adapter—must be replaced by item 15
15	30753371-001 30753373-001 30753375-001 30753397-001 30753399-001	2-1/2 3 4 5 6	Bonnet ↓

Table 7. V5011 Direct Acting Flanged Valves (Fig. 16). (Continued)

Key No.	Part No.	Valve Size in Inches	Description
16	30731050-001	2-1/2	Stem, 125 psi valves
	30731052-001	3	Stem, 125 psi valves
	30731054-001	4	Stem, 250 psi valves
	30683263-001	4	Stem, 125 psi valves
	30731056-001	5	Stem, 250 psi valves
	30683263-002	5	Stem, 125 psi valves
	30731058-001	6	Stem, 250 psi valves
	30683263-003	6	Stem, 125 psi valves
17	30674008-001	4, 5, & 6	Clip, 125 & 250 psi valve
	30064584-316	2-1/2 & 3	Clip, 250 psi valve
18	30064584-322	2-1/2 & 3	Pin, 125 lb valve
19	30041054-100	2-1/2	Disc Holder
	30041055-100	3	
	30041056-100	4	
	30041057-100	5	
	30041058-100	6	
20	30041049-835	2-1/2	Disc
	30041050-835	3	
	30041051-835	4	
	30041052-835	5	
	30041053-835	6	
21	30731049-001	2-1/2	Skirt
	30731051-001	3	
	30731053-001	4	
	30731055-001	5	
	30731057-001	6	
22	30048312-322	2-1/2 & 3	Nut
	30067756-322	4, 5, & 6	
23	30041027-760	2-1/2	Seat Ring
	30041028-760	3	
	30041029-760	4	
24	30046304-859	2-1/2	Gasket
	30046335-859	3	
	30046366-859	4	
	30046438-859	5	
	30046541-859	6	
25	—	2-1/2 to 6	Valve Body
26	30041026-200	4, 5, & 6	Cap - Not required on 2-1/2 and 3 in. valves

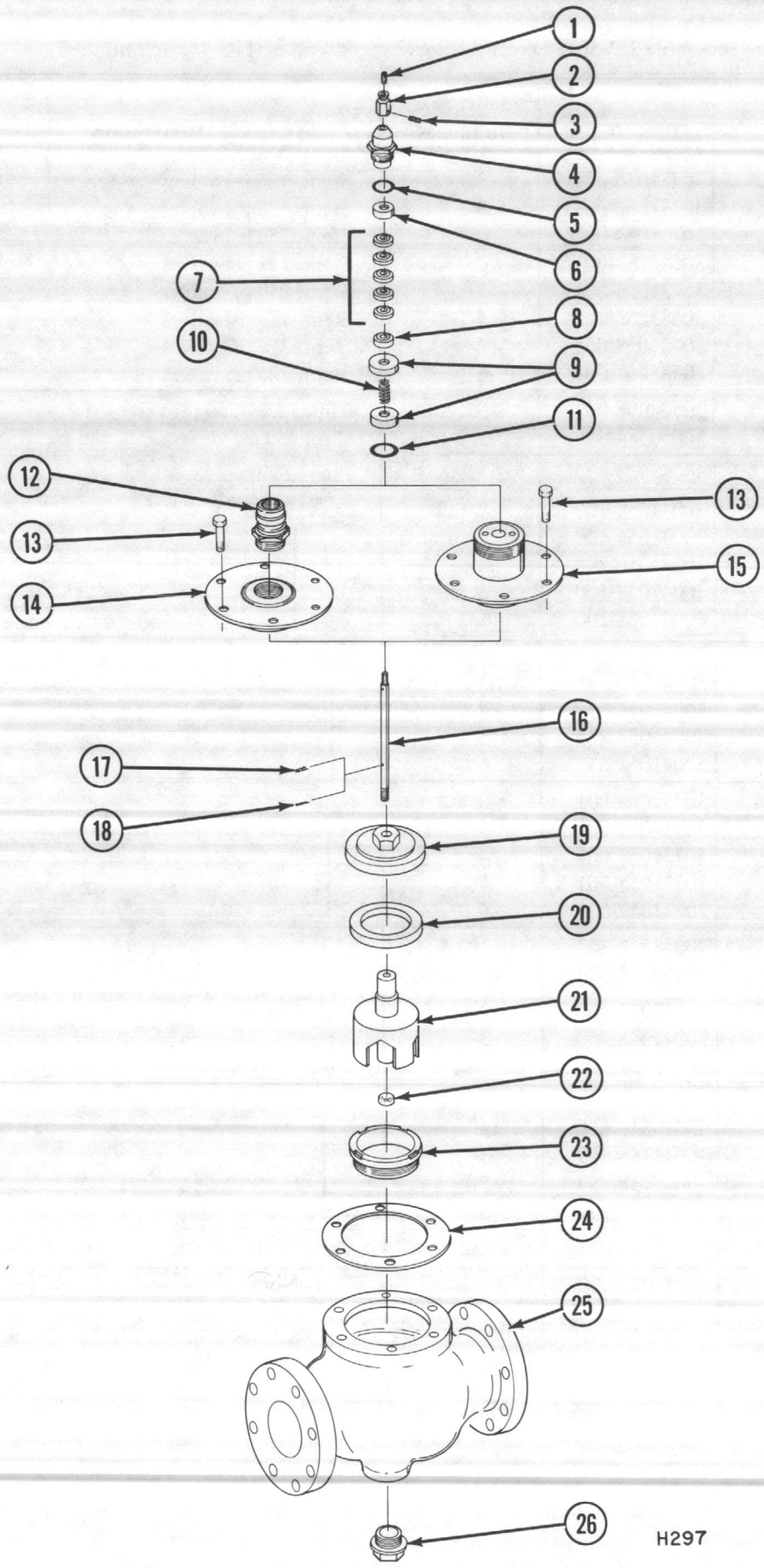

Fig. 16. V5011 Direct Acting Flanged Valves Exploded View.

Table 8. V50ll Reverse Acting Flanged Body Valves Parts List (Fig. l7).

Key No.	Part No.	Valve Size in Inches	Description
1	—	—	Setscrew, Socket Hd (125 psi valves) 1/4-28x1/4 Setscrew, Cap Pt Socket (250 psi valves) 1/4-28x3/4
2	312496 30041089-235	4, 5, & 6	Button—125 psi valves Button—250 psi valves
3	—	—	Setscrew, 8-32x3/16
4	30041038-001 30683135-001	4, 5, & 6	Packing Box Nut—125 psi valves Packing Box Nut—250 psi valves
5	30682506-003	4, 5, & 6	Seal, Packing—250 psi valves
6	30685567-003	4, 5, & 6	Female Adapter—250 psi valves
7	30041036-854 30685565-003	4, 5, & 6	Packing—125 psi valves(5) Packing—250 psi valves(3)
8	30685566-003	4, 5, & 6	Adapter, Male
9	30041087-107	4,5 , & 6	Spring Flange
10	30041085-218	4, 5, & 6	Spring
11	30685440-025	4, 5, & 6	O-ring—250 psi valves
12	30040646-760	4, 5, & 6	Bonnet
13	30041029-760	4	Seat Ring
14	30731054-001 30731056-001 30731058-001	4 5 6	Stem—125 and 250 psi valves
15	30674008-001	4, 5, & 6	Clip
16	30731053-001 30731055-001 30731057-001	4 5 6	Skirt
17	30041051-835 30041052-835 30041053-835	4 5 6	Disc
18	30041056-100 30041057-100 30041058-100	4 5 6	Disc Holder
19	30067756-322	4, 5, & 6	Nut
20	—	4, 5, & 6	Drop Pin (old style)
21	30046366-859 30046438-859 30046541-859	4 5 6	Gasket
22	30041023-100 30046436-100 30046542-001	4 5 6	Adapter
23	—	4, 5, & 6	Adapter Flange—must be replaced by item 22
24	—	4, 5, & 6	Body Plug—must be replaced by item 22
25	— — —	4 5 6	Hex Cap Flange Bolt, 9/16-12 x 1-1/2 in. (6) (8) (8)
26	—	—	Valve Body

Table 9. V5013A Threaded Body Valve Parts List (Fig. 18).

Key No.	Part No.	Valve Size in Inches	Cv	Description
1	—	1/2 to 2	—	Setscrew, Socket Hd 1/4-28x1/4
2	310503-00062	1/2 to 2	—	Button
3	310509	1/2 to 1-1/4	—	Packing Gland
	311431	1-1/2, 2	—	
4	310623	1/2 to 1-1/4	—	Packing (3)
	311432	1-1/2, 2	—	Packing (4)
5	310506	1/2 to 1-1/4	—	Follower
	311430	1-1/2, 2	—	
6	310498	1/2 to l-1/4	—	Spring
	311565	1-1/2, 2	—	
7	311081	1/2, 3/4	—	Bonnet
	311348	1	—	
	310691	1-1/4	—	
	311427	1-1/2	—	
	311429	2		
8	311444	1/2	2.5	Plug, Throttling
	311445	1/2	4.0	
	311446	3/4	6.3	
	311447	1	10.0	
	311448	1-1/4	16.0	
	311449	1-1/2	25.0	
	311450	2	40.0	
9	311440	1/2 to 1-1/4	2.5-16	Stem Support
	311442	1-1/2, 2	25, 40	
10	313338	1/2 to 1-1/4	2.5-16	Stem
	313339	1-1/2, 2	25, 40	
11	311441	1/2 to 1-1/4	2.5-16	Stem Support
	311443	1-1/2, 2	25, 40	
12	313941	1/2 to 2	2.5-40	Spring
13	311631	1/2 to 1-1/4	2.5-16	O-ring
	313693	1-1/2, 2	25, 40	
14	311436	1/2 to 1-1/4	2.5-16	Plug
	311437	1-1/2, 2	25, 40	
15	—	1/2 to 2	—	Valve Body
16	—	1/2 to 2	—	Lower Seat Outlet

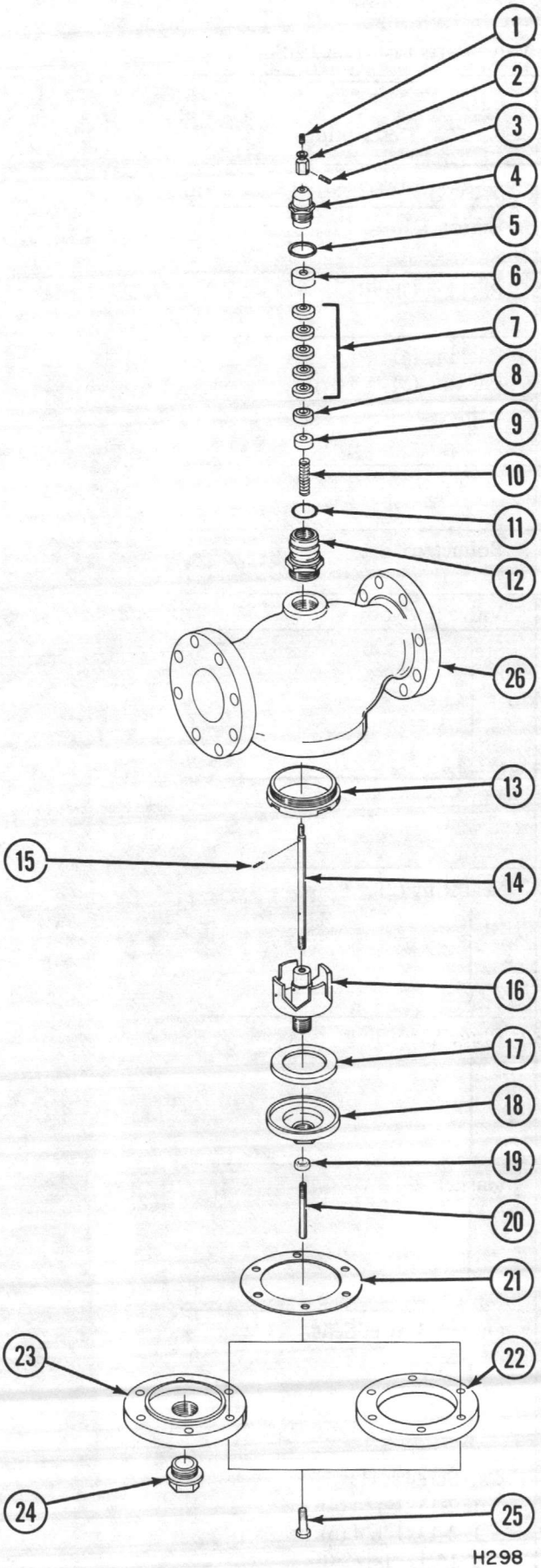

Fig. 17. V5011 Reverse Acting Flanged Body Valves Exploded View.

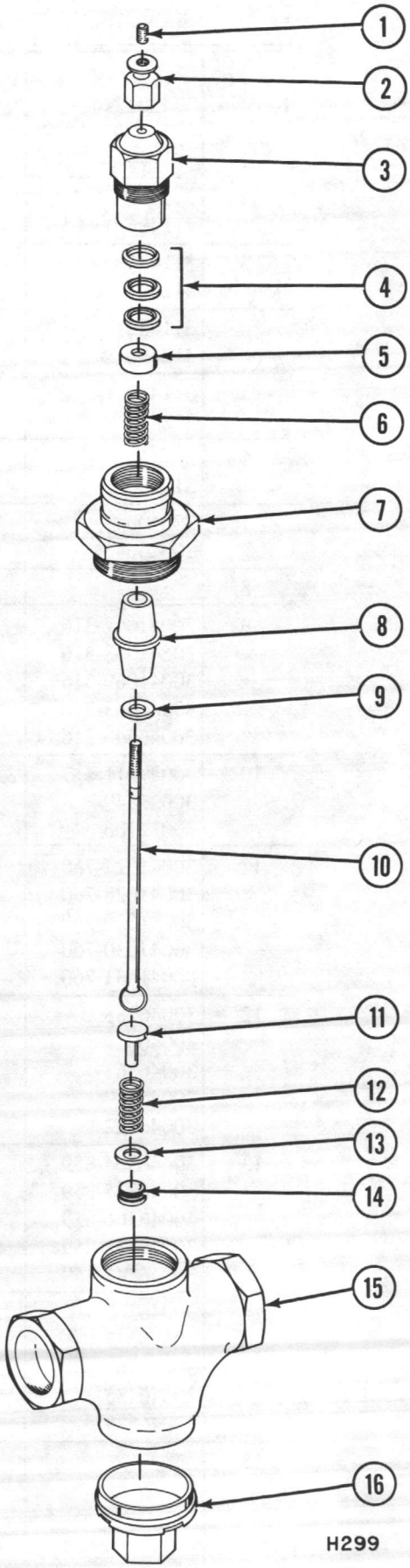

Fig. 18. V5013A Threaded Body Valves Exploded View.

Table 10. V5013A Flanged Type Valve Parts List (Fig. 19).

Key No.	Part No.	Valve Size in Inches	Description
1	—	2-1/2 to 6	Setscrew, l/4-28 x 1/4 Socket Hd
2	312495 312496-00605	2-1/2, 3 4 to 6	Button
3	311431 312497	2-1/2, 3 4 to 6	Packing Gland
4	311432 312498	2-1/2, 3 4 to 6	Packing (4) Packing (5)
5	311430 312499	2-1/2, 3 4 to 6	Follower
6	311565 312500	2-1/2, 3 4 to 6	Spring
7	30040647 30040646	2-1/2, 3 4 to 6	Bonnet
8	—	2-1/2 to 6	Valve Bodyody
9	30041067-316 30041068-316 30041069-316 30046463-316 30046540-316	2-1/2 3 4 5 6	Stem
10	30029911 30036549 30032106	2-1/2, 3 4, 5 6	Pin
11	30041027-760 30041028-760 30041029-760 30041030-760 30041031-760	2-1/2 3 4 5 6	Seat Ring (2)
12	30046288 30046324 30046363 30046437 30046522	2-1/2 3 4 5 6	Plug, Throttling
13	30046304-859 30046335-859 30046366-859 30046438-859 30046541-859	2-1/2 3 4 5 6	Gasket
14	30046303 30046337 30046367 30046435 30046539	2-1/2 3 4 5 6	Outlet - Lower Seat
15	—	— 2-1/2 3 4 5 6	Cap Screws, Hex Hd 1/2-13x1-1/4 (4) 1/2-13x1-1/4 (6) 9/16-12x1-1/2 (6) 9/16-12x1-1/2 (8) 5/8-11x1-1/2 (8)

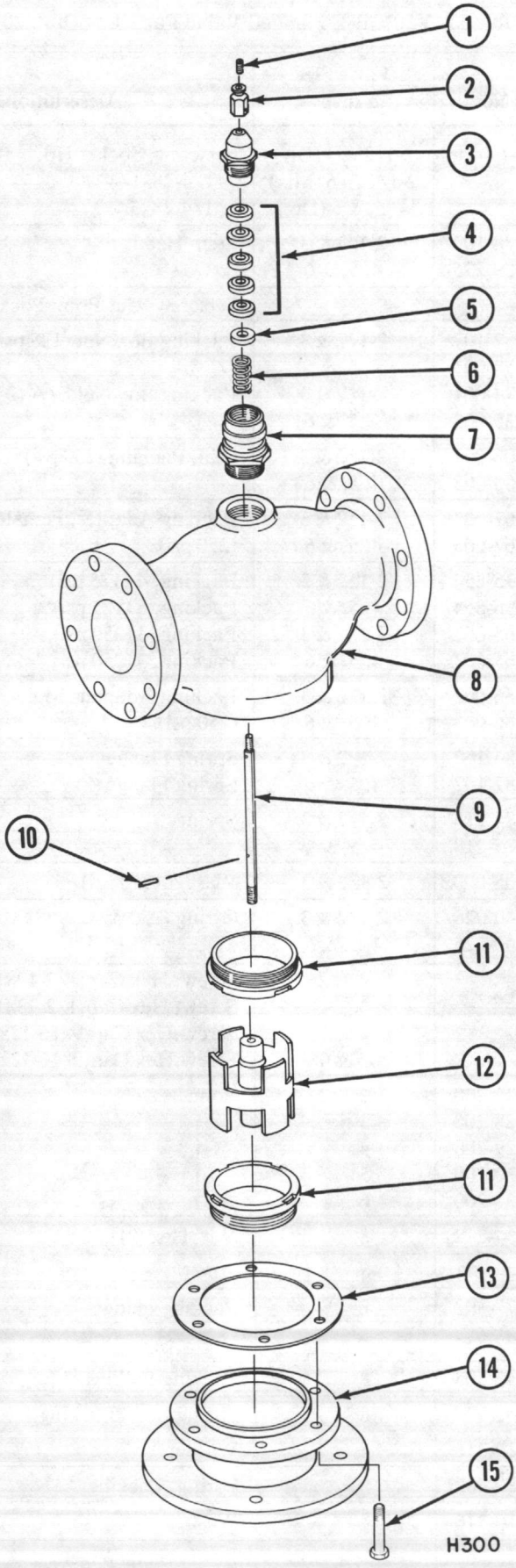

Fig. 19. V5013A Flanged Body Valves Exploded View.

Table 11. V5013B-E Flanged Valve Parts List (Fig. 20).

Key No.	Part No.	Valve Size in Inches	Description
1	—	2-1/2 & 3 (Div) 2-1/2 to 6 (Mix) 4, 5, & 6 (Div)	Setscrew, Socket Hd. 1/4-28x1/4 1/4-28x3/4
2	30041088-107 30041089-235	2-1/2 & 3 4, 5, & 6	Stem Head
3	—	—	Setscrew, Cut Point Socket, 8-32x3/16
4	30687857-107 30687858-001 30683374-001 30683135-002	2-1/2 & 3 4, 5, & 6 2-1/2 & 3 4, 5, & 6	Packing Box Nut (125 psi) Packing Box Nut S/A (250 psi)
5	30682506-002 30682506-003	2-1/2 & 3 4, 5, & 6	Seal, Packing (250 psi)
6	30685567-002 30685567-003	2-1/2 & 3 4, 5, & 6	Packing Adapter, Female (250 psi)
7	30041035-854 30041036-854 30685565-002 30685565-003	2-1/2 & 3 4, 5, & 6 2-1/2 & 3 4, 5, & 6	Packing, 4.(125 psi) Packing, 5 (125 psi) Packing, 3 (250 psi) Packing, 3 (250 psi)
8	30685566-002 30685566-003	2-1/2 & 3 4, 5, & 6	Packing Adapter, Male (250 psi)
9	30041086-107 30041087-107	2-1/2 & 3 4, 5, & 6	Spring Flange Spring Flange (2)
10	30041084-218 30041085-218	2-1/2 & 3 4, 5, & 6	Spring
11	30078905-000	2-1/2 & 3	Washer (250 psi)
12	30685440-026 30685440-025	2-1/2 & 3 4, 5, & 6	O-ring (250 psi)
13	— — — —	2-1/2 3 4 5 & 6	Screw, Hex Cap,1/2-13x1-1/4(4) Screw, Hex Cap,1/2-13x1-1/4(6) Screw,Hex Cap,9/16-12x1-1/2(6) Screw,Hex Cap,9/16-12x1-1/2(8)
14	30067827-200 30067828-200 30067829-200 30067830-200 30067831-200	2-1/2 3 4 5 6	Bonnet
15	30032534-272	8	Nut, Hex (2)
16	30037244-271	8	Stud (2)
17	30065377-392	8	Packing Flange
18	30065392-854	8	Upper Stem Wiper
19	30037243-303	8	Packing Follower
20	30065401-936	8	Spring Load Packing
21	30065410-316	8	Washer
22	30065380-461	8	Spring, Packing
23	30065410-316	8	Washer (8)
24	30065418-862	8	Lower Stem Wiper

Table 11. V5013B-E Flanged Valve Parts List (Fig. 20). (Continued)

Key No.	Part No.	Valve Size in Inches	Description
25	30036963-392	8	Nut, Yoke Lock
26	—	8	Screw, Hex Cap,3/4-10x2-1/4(8)
27	30069128-200	8	Bonnet
28	30067837-316	2-1/2	Stem, Mixing
	30067838-316	3	↓
	30067839-316	4	
	30067840-316	5	
	30067841-316	6	
	30069132-316	8	
28	30067871-316	2-1/2	Stem, Diverting
	30067872-316	3	↓
	30067873-316	4	
	30067874-316	5	
	30067875-316	6	
	30069131-316	8	
29	30067842-905	2-1/2	Seat Ring Subassembly (2)
	30067843-905	3	↓
	30067844-905	4	
	30685316-001	5	Seat Ring (2)
	30067849-100	6	↓
	30069135-100	8	
30	30684011-001	2-1/2	O-ring (2)
	30067531-891	3	↓
	30067533-891	4	
	30067535-891	5	
	30067856-891	6	
	30069137-891	8	
31	30067866-760	2-1/2	Plug, Diverting (2)
	30067867-760	3	↓
	30067868-760	4	
	30067869-100	5	
	30067870-100	6	
	30069129-100	8	
32	30067876-107	2-1/2 & 3	Bushing (Diverting)
	30067877-707	4, 5, & 6	↓
	30069133-107	8	
33	30067832-760	2-1/2	Plug, Mixing
	30067833-760	3	↓
	30067834-760	4	
	30067835-760	5	
	30067836-760	6	
	30069130-100	8	
34	30048312-322	2-1/2 & 3	Nut, Skirt
	30067756-322	4, 5, & 6	↓
	30069136-322	8	
35	30067859-859	2-1/2	Gasket
	30067860-859	3	↓
	30067861-859	4	
	30067862-859	5	
	30067863-859	6	
	30069134-859	8	
36	—	2-1/2 to 8	Valve Body

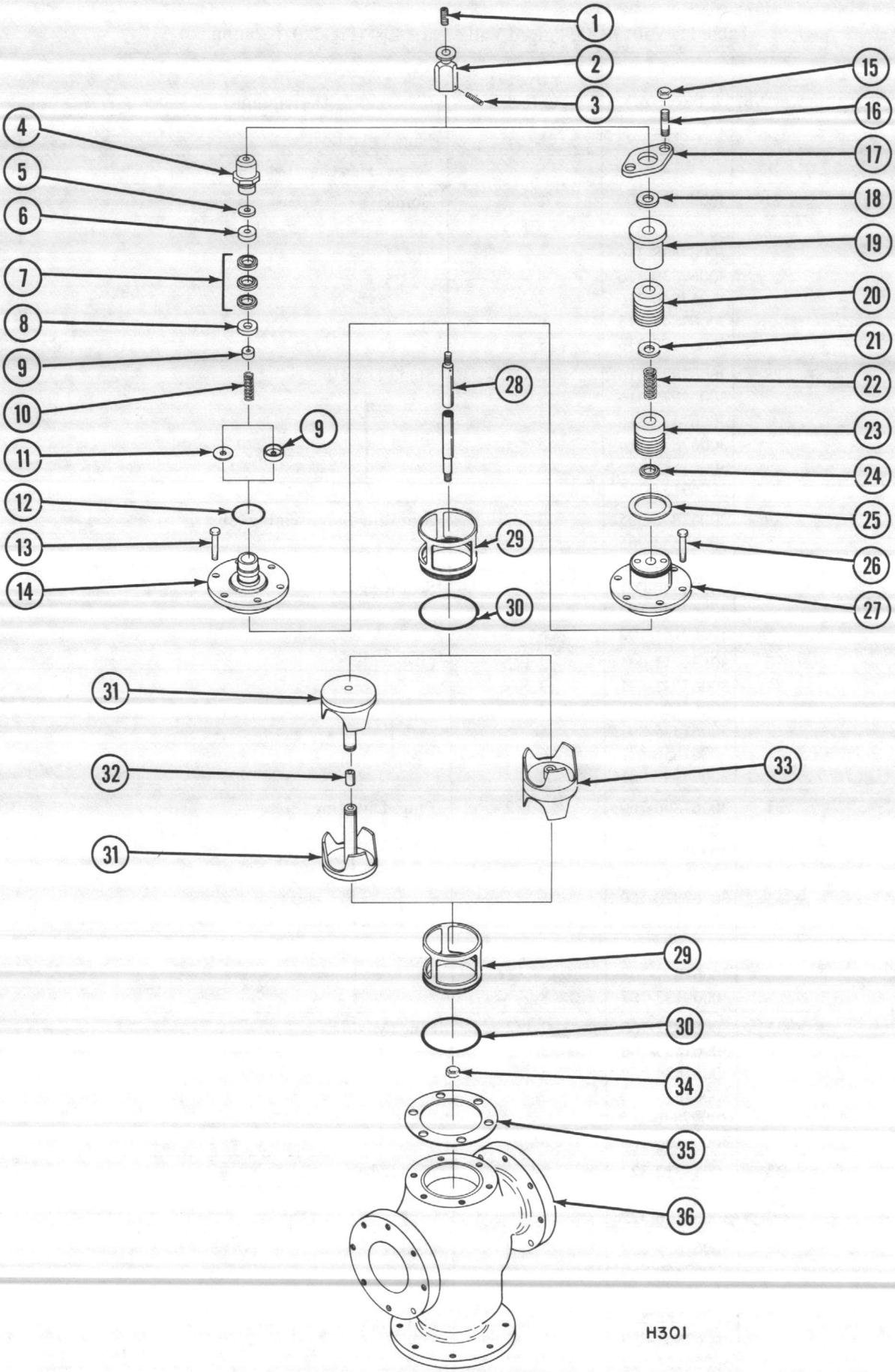

Fig. 20. V5013B-E Flanged Valves Exploded View.

REPACK KITS

These repack kits include Packing, Follower, and Spring.

1. 14003294-001—for 1/2 thru 1-1/4 in. valves.
2. 14003295-001—for 1-1/2 thru 3 in. valves.
3. 14003296-001—for 4, 5, and 6 in. valves.

REPAIR KITS

These repair kits include Packing, Follower, Spring, Stem Assembly, and Disc.

1. 14003110-001—for 25 Cv 1-1/2 thru 2-1/2 in. valves.
2. 14003111-001—for 40 Cv 2 and 3 in. valves.

V5011A & C VALVE SEAT DIMENSIONS

See Table 12 and Fig. 21 for V5011A & C Valve Seat Dimensions.

Table 12. V5011A & C Valve Seat Dimensions (Fig. 21).

Valve Size in Inches	Cv	Part Number	X Dimension in Inches	Y Dimension In Inches
1/2	.63-2.5	310535	7/8 Hex	0.375
	4.0	311055	7/8 Hex	0.50
3/4	2.5	310536	1 Hex	0.375
	4.0	310543	1 Hex	0.50
	6.3	310890	1 Hex	0.70
1	4.0	310538	1-1/8 Hex	0.50
	6.3	310537	1-1/8 Hex	0.70
	10	311077	1-1/8 Hex	0.77
1-1/4	6.3	310540	1-3/8 Hex	0.70
	10	310539	1-3/8 Hex	0.77
	16	311078	1-3/8 Hex	1.032
1-1/2	10	311289 ⚠1	1-5/8 Hex	0.77
	16	310541	1-5/8 Hex	1.032
	25	310542	1-5/8 Hex	1.312
2	16	311290	2-1/8 Hex	1.032
	25	311291	2-1/8 Hex	1.312
	40	311624	2-1/8 Hex	1.703
2-1/2	25	311729 ⚠1	2-5/8 Hex	1.312
	40	311730	2-5/8 Hex	1.703
	63	311731	2-5/8 Hex	2.20
3	40	311732 ⚠1	3-1/8 Hex	1.703
	63	311733	3-1/8 Hex	2.20
	100	311734	3-1/8 Hex	2.812

⚠1 Obsolete.

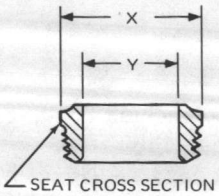

Fig. 21. V5011A & C Valve Seat Dimensions.

ACCESSORIES

1. Stem Extensions (using 8 or 13 in. actuators):
   311851-00062, for 1/2 thru 3 in. valves.
   312466-00605, for 4, 5, & 6 in. valves.
2. 250 psi Conversion Kits:
   14002920-001, for 1/2 thru 1-1/4 in. valves (rubber packing).
   14002920-002, for 1-1/2 thru 3 in. valves (teflon packing).

NOTE: Other accessories may be listed on MP953 Service Data 75-5500.

Honeywell

Comfort Control Systems

LP914A & LP915A PNEUMATIC TEMPERATURE SENSORS

Service Data

GENERAL

DESCRIPTION

The LP914A and LP915A Sensors are direct acting, proportional-type for use with a pneumatic receiver controller in HVAC systems to control valves and dampers.

The LP914A has a rod and tube insertion element for duct, well, or wall mounting.

The LP915A has a liquid-filled averaging element for duct mounting.

APPLICATION

LP914A

Figure 1 shows a typical application of duct-mounted LP914A.

LP915A

The liquid filled element of the LP915A is mounted in a duct with capillary clips to sense average air temperature in HVAC systems.

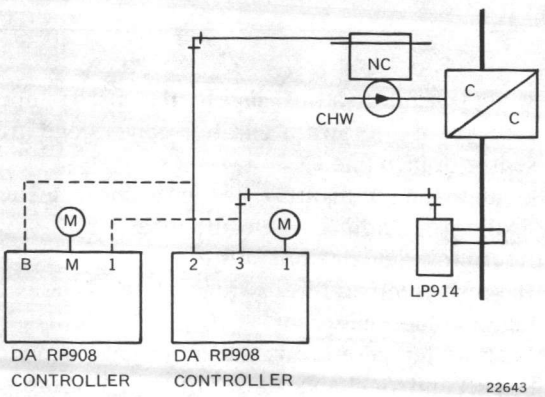

Fig. 1. LP914A Typical Duct-Mounted Application.

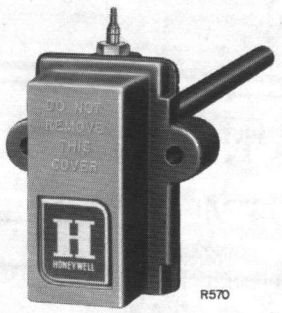

LP914

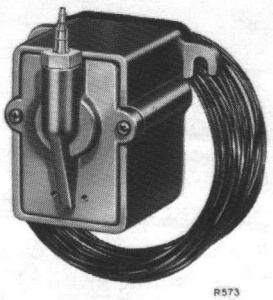

LP915

Table 1. Model No., Sensing Range, and Element Length.

Model No.	Sensing Range, F (C)	Element Length in. (mm)	Mounting
LP914A1003	-40 to 160 (-40 to 71)	15 (381)	duct
LP914A1011	-40 to 160 (-40 to 71)	12 (305)	wall
LP914A1029	40 to 240 (5 to 115)	15 (381)	well
LP914A1037	-40 to 160 (-40 to 71)	15 (381)	well
LP914A1045	-40 to 160 (-40 to 71)	6-1/2 (165)	duct
LP914A1052	40 to 240 (5 to 115)	6-1/2 (165)	well
LP914A1060	-40 to 160 (-40 to 71)	6-1/2 (165)	well
LP914A1110	-20 to 80 (-30 to 30)	15 (381)	well
LP914A1144	25 to 125 (-5 to 55)	15 (381)	duct
LP914A1243	-20 to 80 (-30 to +30)	15 (381)	duct
LP914A1250	-20 to 80 (-30 to +30)	12 (305)	wall
LP914A1268	40 to 240 (5 to 115)	15 (381)	duct
LP915A1044	0 to 200 (-18 to 93)	240 (6096)	duct
LP915A1051	0 to 200 (-18 to 93)	104 (2642)	duct
LP915A1077	30 to 130 (1 to 54)	240 (6096)	duct

SPECIFICATIONS

MODELS: See Table 1.

SENSING RANGE (Non-Adjustable): See Table 1.

Copyright © 1985 Honeywell Inc.

75-5527
Commercial Bldg Group
MLF TAB: II. C. 6.

MAXIMUM SAFE TEMPERATURE AT ELEMENT:
LP914A: 265F (129C).
LP915A: 225F (107C).

SUPPLY AIR PRESSURE: 18 psi (124 kPa).

MAXIMUM SAFE AIR PRESSURE: 25 psi (172 kPa).

PRESSURE OUTPUT: 3 to 15 psi (31 to 103 kPa).

AIR CONSUMPTION: 0.021 scfm (9.9 ml/s).

AIR CONNECTIONS: Push-on barb fitting for 5/32 and 1/4 in. (4 and 6 mm) O.D. tubing.

OPERATION

Operation is similar for both the LP914 and LP915. An increase in temperature at the sensing element (rod or capillary) causes a proportional increase in branchline pressure to the controller. For example, using the typical application shown in Figure 1, as branchline pressure from the controller to the n.c. valve increases, chilled water is circulated through the cooling coil. A decrease in temperature causes a decrease in branchline pressure proportionately and closes the valve.

MAINTENANCE

EQUIPMENT REQUIRED

Commercial cleaning solvent.

CLEANING

Remove any accumulated dust or dirt with a soft brush. A commercial cleaning solvent may be used if needed.

⚠WARNING⚠

Special care should be taken using solvents. Avoid prolonged inhalation and/or contact with skin. Careless handling can result in damage to the respiratory system and skin tissue.

OPERATIONAL CHECK

A quick operational check may be performed by raising the temperature at the sensing element. The output pressure should increase. Lower the temperature and the output pressure should decrease.

ADJUSTMENT AND CALIBRATION

The LP914 and LP915 are factory calibrated and require no adjustment.

CAUTION

1. Do not remove the cover of the sensor or tamper with sensor in any way.
2. Take care to prevent the sensor element from being dented or damaged.

TROUBLESHOOTING

Sensors are factory calibrated and cannot be recalibrated in the field.

If a sensor is applied to be read over a large range, such as outside air, then check the temperature(s) that is critical to the application.

1. Take accurate reading of temperature at sensing element.
2. Read sensor temperature at receiver gage. If difference in readings is unacceptable, adjust gage to read the same as the sensed temperature.
3. If not possible to adjust gage to the sensed temperature, place a known accurate receiver gage in the sensor branch line.
4. Change the temperature of the sensor element by heating or cooling, then allow sensor to slowly return to original temperature.
5. If sensor temperature as read at the gage is too high, replace the sensor.
6. If sensor temperature as read at the gage is too low, inspect and/or change sensor filters and the restriction that feeds the sensor. If the problem cannot be corrected, replace the sensor.

REPAIR

The only repair recommended for either the LP914 or LP915 is periodic replacement of the filters and screen for both the LP914 and LP915, and the gasket for the duct mounted LP915. This is shown in Figure 2 in the PARTS AND ACCESSORIES section. Device replacement is recommended for any operational problems or damage to the device.

REPLACEMENT OF FILTERS AND SCREEN

1. Shut off system air and remove barb fitting from sensor.
2. Remove and discard filters and screen. Replace with new parts.
3. Connect barb fitting and turn on system air.
4. Perform operational check.

REPLACEMENT OF GASKET (LP915)

1. Shut off system air and remove mounting screws (3) from LP915.
2. Remove gasket and replace with new part.
3. Turn on system air and perform operational check.

PARTS AND ACCESSORIES

PARTS LIST

Table 2. LP914A and LP915A Repair Parts List (Fig. 2).

Key	Part No.	Description
1	316429	Filter
2	309379	Screen
3	315602	Filter
4	315597	Gasket (LP915)
5		Screw, Slotted Hex-Head Drill Point. LP914 (2), LP915 (3)

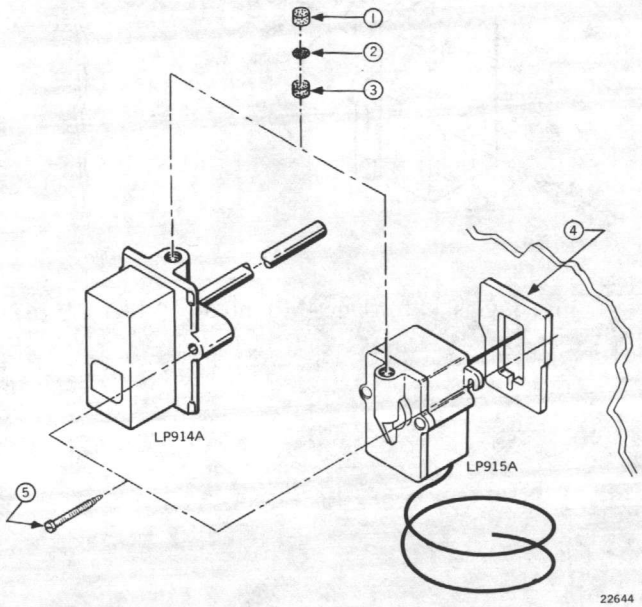

Fig. 2. LP914A and LP915A Replacement Parts (Table 1).

ACCESSORIES

1. Wells (LP914A):
   Copper:
   315046A — 15-3/8 in. (385 mm) long.
   315046B — 7-3/8 in. (187 mm) long.
   Stainless Steel:
   315904A — 15-5/16 in. (389 mm) long.
   315904B — 7-5/16 in. (186 mm) long.
2. Averaging Element Clip 314439 — LP915A (Fig. 3).
3. Gasket 315182 — duct-mounted LP914A (Fig. 4).
4. Outdoor Bulb Shield 311085-00107 — wall-mounted LP914A (Fig. 5).
5. Bracket 315114 — wall-mounted LP914A (Fig. 5).
6. Bracket 315115-00062 — well-mounted LP914A (Fig. 6).

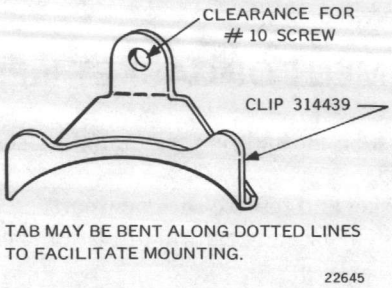

Fig. 3. Capillary Clip for Duct-Mounted LP915A.

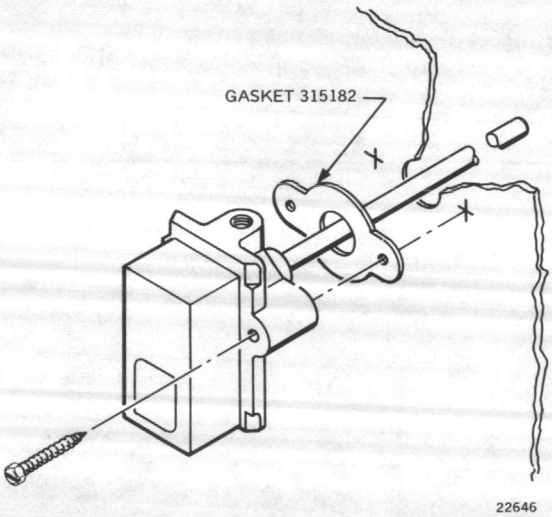

Fig. 4. Gasket for Duct-Mounted LP914A.

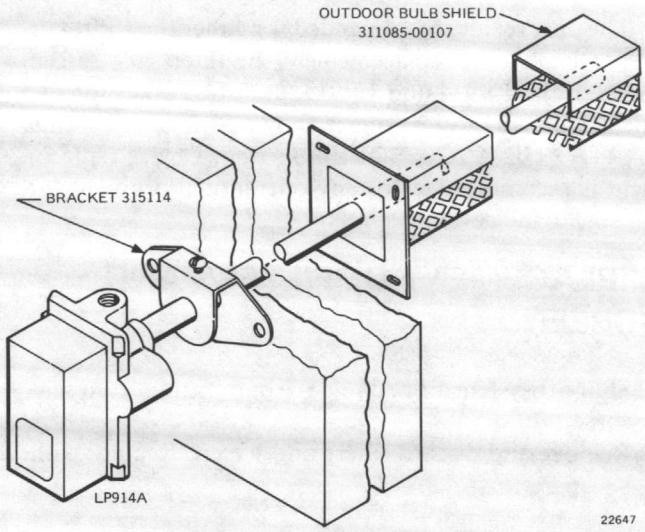

Fig. 5. Outdoor Bulb Shield and Bracket for Wall-Mounted LP914A.

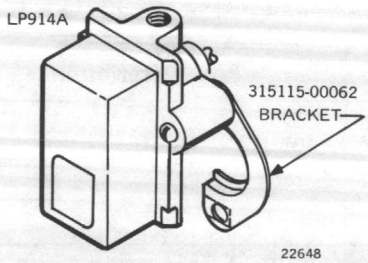

Fig. 6. Bracket for Well-Mounted LP914A.

Honeywell

Maintenance & Repair

L480B and L480G TEMPERATURE CONTROLLERS

R3310

INTRODUCTION

These instructions cover general maintenance and disassembly for the L480B and L480G Temperature Controllers. An exploded view drawing is included to facilitate repair.

No special tools are required to maintain this device.

MAINTENANCE

INSPECTION AND CLEANING

The cover of the temperature controller must be in place at all times to protect internal components from dust, dirt, and physical damage. After initial installation, the only maintenance necessary is periodic inspection and cleaning.

⚠WARNING⚠

Disconnect power source before removing controller cover to work on the internal components.

1. Remove controller cover and inspect controller for any damage.
2. Remove accumulated dirt or dust using a soft brush or air hose.
3. If inspection reveals any damaged parts, replace controller.

⚠WARNING⚠

Use special care when using solvents. Avoid prolonged inhalation and/or contact with the skin. Careless handling can result in permanent damage to the respiratory system and skin tissue.

4. Clean disassembled parts in the solvent listed in Table 1. If any parts are damaged, replace entire device.
5. Reassemble the controller, coating all pivot points and screw threads with the lubricant listed in Table 1.

Table 1.

Material	Application
Solvent—Inhibited 1, 1, 1-Tri-chlorethane such as Clorothene or Vythene.	Obtain locally–use to soften grease and dirt which cannot be easily removed.
Lubricant—Multi-Purpose Grease.	Lubricate screw threads to prevent rust and corrosion.

T111

OPERATIONAL CHECK

After routine maintenance, return the system to normal operation. Place an accurate thermometer next to the sensing element, or provide other means to measure temperature of the controlled medium. When a stable temperature is reached, check the controller operation as follows:

FOR L480G, L480B1098, B1106, AND B1239 CONTROLLERS

These controllers are designed for freeze-up protection and are calibrated to the break of the switch contacts (R-W on L480B) at the lowest temperature sensed by any one-foot portion of the 20-foot temperature sensing element.

Copyright © 1987 Honeywell Inc.
All Rights Reserved

74-3609
Commercial Bldg Group
MLF TAB: II. B. 2. b.

Turn the adjustment knob to the lowest setting. Slowly turn the adjustment knob toward the high scale setting. This simulates a temperature fall at the sensing element. When the switch contacts (R-W on L480B) break and the equipment stops, the scale reading should correspond to the measured temperature, unless airflow stratification causes some portion of the element to respond to a lower temperature (Fig. 1).

FOR OTHER L480B CONTROLLERS

Turn the adjustment knob to the lowest setting. Slowly turn the adjustment knob toward the high scale setting. This simulates a temperature fall (call for heat) at the sensing element. When the R-B contacts make and the heating equipment starts, the scale setting should correspond to the thermometer reading at the sensing element.

Reset the controller to a normal setpoint and allow the system to settle out. Then turn the adjustment knob to the highest setting. Slowly turn the adjustment knob toward the lowest setting. This simulates a temperature rise (call for cooling) at the sensing element. When the R-B contacts break, the scale setting should correspond to the thermometer's reading plus the set differential of the controller (Fig. 1).

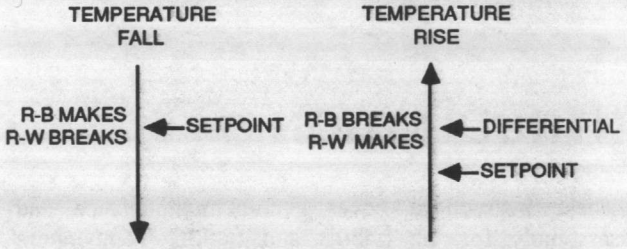

NOTE: THE L480G HAS A SPST SWITCH (CORRESPONDING TO R-W) WHICH BREAKS AND MUST BE MANUALLY RESET TO RESUME OPERATION.

C846

Fig. 1. Operating Sequence.

PARTS LIST

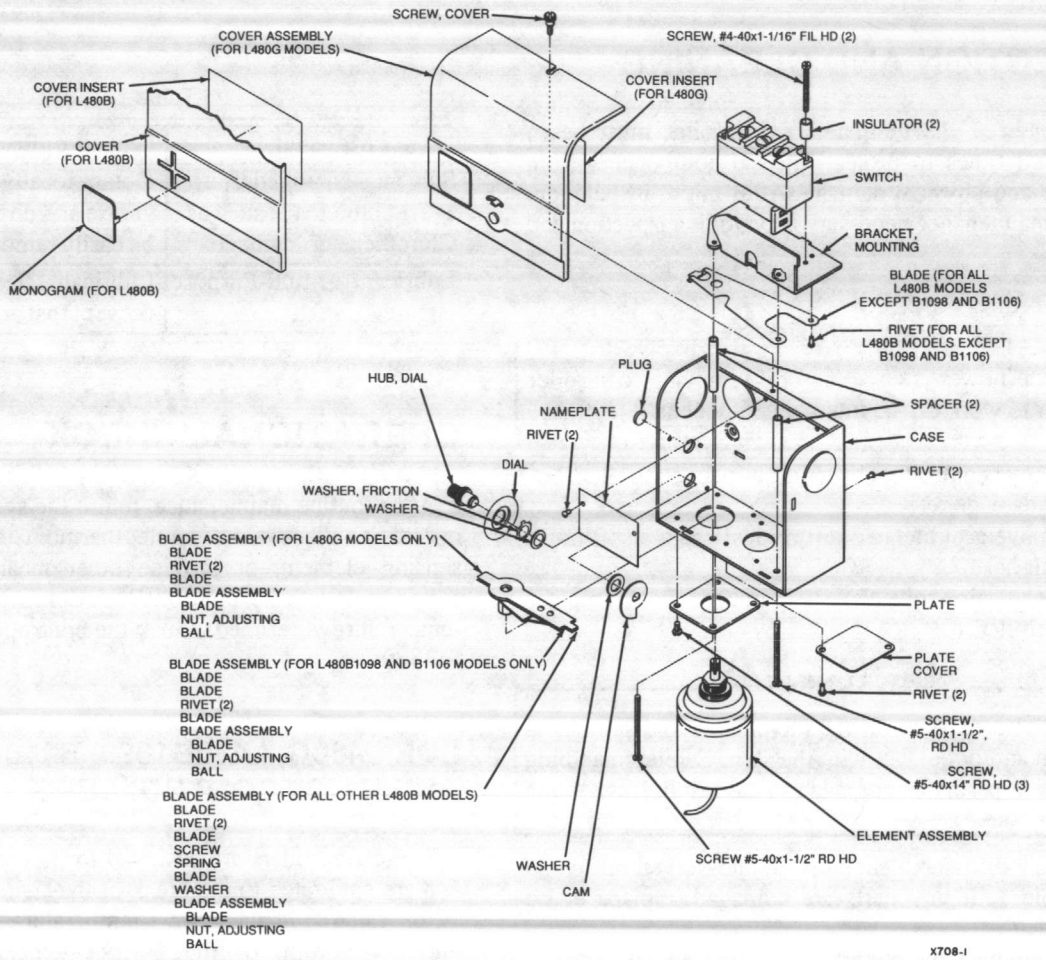

Fig. 2. L480B and L480G Temperature Controllers.

HONEYWELL • Minneapolis, Minnesota 55408 • Scarborough, Ontario MIP 2V9 • Subsidiaries and Affiliates Around the World • Printed in U.S.A.

Honeywell

Comfort Control Systems

MO953A-D AND MP953A-F PNEUMATIC VALVE ACTUATORS

Service Data

GENERAL

DESCRIPTION

The MO953 and MP953 are pneumatic valve actuators for V5011 and/or V5013 Valve Assemblies, and with adapters, control older steam and water valves. The MP953E and MP953F models have a new-style positive positioner (1982). There are four new-style positive positioner retrofit kits available for MP953A and B models (see ACCESSORIES in PARTS AND ACCESSORIES section).

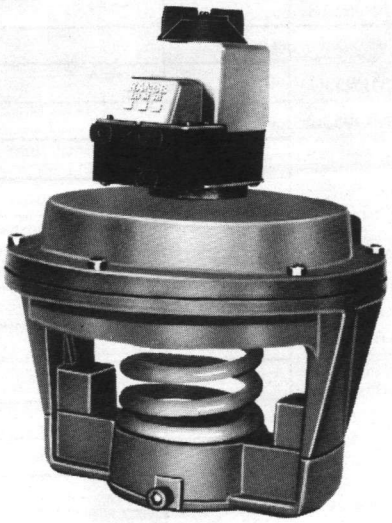

MP953E R2620

APPLICATION

These pneumatically powered actuators operate the V5011 and V5013 Valve Assemblies, or certain other coil, line, and zone valve assemblies which proportionally control steam, or hot and cold liquids in HVAC systems.

SPECIFICATIONS

MODELS:

- MP953A—Direct-acting with old-style positioner (Gradutrol Relay).
- MP953B—Reverse-acting with old-style positioner.
- MP953C—Direct-acting without positioner.
- MP953D—Reverse-acting without positioner.
- MP953E—Direct-acting with new-style positive positioner.
- MP953F—Reverse-acting with new-style positive positioner.

MAXIMUM SAFE AIR PRESSURE: 30 lb/in^2 (172 kPa).

Refer to Table I for other MO953/MP953 specifications.

MP953C R1878

Copyright © 1985 Honeywell Inc.

Rev. 8-82

Form No. 75-5500
Commercial Bldg Group
MLF TAB: II. C. 7.

Table I. MO953/MP953 Specifications.

Device	Active	Inactive (1982)		Size in Inches (mm)	Travel in Inches (mm)	Maximum Temperature ⚠ F (C)	Spring Range lb/in^2 (kPa)	Corrosion Resistant
		MP953	MO953					
MP953A		1087 1004 1210	A1	5 (127)	3/4 (19)	160 (71)		No
MO953A		1095 1012 1228	A2	5 (127)	3/4 (19)	250 (121)		No
		1103 1046	A6	5 (127)	3/4 (19)	250 (121)		Yes
		1079 1111	A9	5 (127)	1/2 (13)	160 (71)		No
			A5	5 (127)	3/4 (19)	160 (71)		No
		1145 1020 1244	A3	8 (203)	3/4 (19)	160 (71)		No
		1038 1152	A4	8 (203)	1-1/2 (38)	160 (71)	Adjustable	No
		1178 1053	A7	8 (203)	3/4 (19)	160 (71)		Yes
		1202 1186 1061 1269	A8	12 (330)	1/1-2 (38)	160 (71)		No
		1002 1036 1069	B6	7-1/8 (181)	3/4 (19)	160 (71)		No
MP953B		1010 1044	B7	7-1/8 (181)	1/2 (13)	160 (71)		Yes
MO953B		1028 1051	B8	7-1/8 (181)	3/4 (19)	160 (71)		Yes
	1000		C1XH	5 (127)	3/4 (19)	160 (71)	2-7 (14-48)	No
MP953C	1018		C1XK	5 (127)	3/4 (19)	160 (71)	8-12 (55-83)	No
MO953C	1026		C1XL	5 (127)	3/4 (19)	160 (71)	4-11 (28-76)	No
		1034	C2XH	5 (127)	3/4 (19)	250 (121)	2-7 (14-48)	No
		1042	C2XK	5 (127)	3/4 (19)	250 (121)	8-12 (55-83)	No
		1059	C2XL	5 (127)	3/4 (19)	250 (121)	4-11 (28-76)	No
		1505		5 (127)	3/4 (19)	250 (121)	4-11 (28-76)	Yes
	1067		C3XH	8 (203)	3/4 (19)	160 (71)	2-7 (14-48)	No
	1075		C3XK	8 (203)	3/4 (19)	160 (71)	8-12 (55-83)	No
	1083		C3XL	8 (203)	3/4 (19)	160 (71)	4-11 (28-76)	No
		1422		8 (203)	3/4 (19)	250 (121)	4-11-(28-76)	Yes
		1091	C4XH	8 (203)	1-1/2 (38)	160 (71)	2-7 (14-48)	No
		1109	C4XK	8 (203)	1-1/2 (38)	160 (71)	8-12 (55-83)	No
	1117		C4XL	8 (203)	1-1/2 (38)	160 (71)	4-11 (28-76)	No
	1547			8 (203)	1-1/2 (38)	160 (71)	3-15 (21-103)	Yes
		1141	C9XH	5 (127)	1/2 (13)	160 (71)	2-7 (14-48)	No
		1158	C9XK	5 (127)	1/2 (13)	160 (71)	8-12 (55-83)	No
		1166	C9XL	5 (127)	1/2 (13)	160 (71)	4-11 (28-76)	No
		1174	C5XH	5 (127)	3/4 (19)	160 (71)	2-7 (14-48)	Yes
		1182	C5XK	5 (127)	3/4 (19)	160 (71)	8-12 (55-83)	Yes
		1190	C5XL	5 (127)	3/4 (19)	160 (71)	4-11 (28-76)	Yes
		1208	C6XH	5 (127)	3/4 (19)	250 (121)	2-7 (14-48)	Yes
		1216	C6XK	5 (127)	3/4 (19)	250 (121)	8-12 (55-83)	Yes
		1224	C6XL	5 (127)	3/4 (19)	250 (121)	4-11 (28-76)	Yes
		1232	C7XH	8 (203)	3/4 (19)	160 (71)	2-7 (14-48)	Yes
		1240	C7XK	8 (203)	3/4 (19)	160 (71)	8-12 (55-83)	Yes
		1257	C7XL	8 (203)	3/4 (19)	160 (71)	4-11 (28-76)	Yes
		1414		8 (203)	3/4 (19)	250 (121)	4-11 (28-76)	No
	1471	1125	C8XH	13 (330)	1-1/2 (38)	160 (71)	2-7 (14-48)	No
	1489	1133	C8XL	13 (330)	1-1/2 (38)	160 (71)	4-11 (28-76)	No

Table I. MO953/MP953 Specifications. (Continued)

Device	Active	Inactive (1982)		Size in Inches (mm)	Travel in Inches (mm)	Maximum Temperature (1) F (C)	Spring Range lb/in^2 (kPa)	Corrosion Resistant
		MP953	MO953					
MP953D	1107	1008	D1	7-1/8 (181)	3/4 (19)	160 (71)	8-13 (55-90)	No
MO953D		1115 1016	D2	7-1/8 (181)	1/2 (13)	160 (71)	8-13 (55-90)	No
		1123 1024	D3	7-1/8 (181)	3/4 (19)	160 (71)	8-13 (55-90)	Yes
	1131	1073		7-1/8 (181)	3/4 (19)	160 (71)	4-11 (28-76)	No
		1081 1149		7-1/8 (181)	1/2 (13)	160 (71)	4-11 (28-76)	No
		1099 1156		7-1/8 (181)	3/4 (19)	160 (71)	4-11 (28-76)	Yes
	1172			7-1/8 (181)	3/4 (19)	160 (71)	3-7 (21-48)	No
	1198 (2)			7-1/8 (181)	3/4 (19)	160 (71)	4-11 (28-76)	No
	1206 (2)			7-1/8 (181)	3/4 (19)	160 (71)	8-13 (55-90)	No
	1214 (2)			7-1/8 (181)	3/4 (19)	160 (71)	3-7 (21-48)	No
	1222			7-1/8 (181)	3/4 (19)	250 (121)	4-11 (28-76)	No
MP953E	1301			5 (127)	3/4 (19)	160 (71)	3 (21)	No
	1319			5 (127)	3/4 (19)	160 (71)	5 (34)	No
	1327			5 (127)	3/4 (19)	160 (71)	10 (69)	No
	1277			8 (203)	1-1/2 (38)	160 (71)	3 (21)	No
	1285			8 (203)	1-1/2 (38)	160 (71)	5 (34)	No
	1293			8 (203)	1-1/2 (38)	160 (71)	10 (69)	No
	1368			8 (203)	3/4 (19)	160 (71)	3 (21)	No
	1376			8 (203)	3/4 (19)	160 (71)	5 (34)	No
	1384			8 (203)	3/4 (19)	160 (71)	10 (69)	No
	1392			13 (330)	1-1/2 (38)	160 (71)	3 (21)	No
	1400			13 (330)	1-1/2 (38)	160 (71)	5 (34)	No
	1418			13 (330)	1-1/2 (38)	160 (71)	10 (69)	No
MP953F	1119			7 (180)	3/4 (19)	160 (71)	10 (69)	No
	1101			7 (180)	3/4 (19)	160 (71)	5 (34)	No
	1093			7 (180)	3/4 (19)	160 (71)	3 (21)	No

(1) Diaphragm color varies with maximum temperature: Black (Neoprene)—160 F (71 C), Black with White Dot (Ethylene Propylene)—250 F (121 C).

(2) Sales Special.

OPERATION

In a direct-acting (N.O. valve) system, an increase in control air pressure forces the actuator diaphragm and cup assembly downward, forcing the valve stem down to proportionally close off the flow through the valve (Fig. 1).

In a reverse-acting (N.C. valve) system, an increase in control air pressure forces the actuator diaphragm and cup assembly upwards, forcing the valve stem up to proportionally increase the flow through the valve.

Actuators without the positive positioner have branch line pressure applied to the diaphragm. Operators with positive positioners may have up to full main air pressure applied to diaphragm to ensure the valve is positioned proportionally to the branch line pressure.

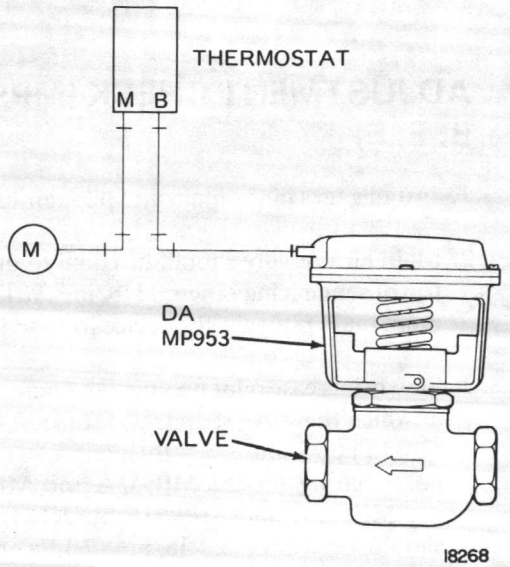

Fig. 1. Typical Direct-Acting MP953 Operation.

MAINTENANCE

EQUIPMENT NEEDED

— Commercial cleaning solvent or degreaser.
— Gage, 0 to 30 lb/in^2 (0 to 207 kPa).
— Wrench, Part No. 301572A, for MP953A and B.

VISUAL INSPECTION

Periodically make a visual check for leaks, loose fittings, etc.

CLEANING

Clean the actuator with a commercial cleaning solvent or degreaser.

> WARNING
>
> Careless handling of solvents can result in permanent damage to the respiratory system or to the skin. Avoid prolonged inhalation or contact with the skin.

OPERATIONAL CHECK

Vary the branch line pressure through the operational range of the actuator in both directions. The valve should open and close smoothly.

ADJUSTMENT CHECK (MP953A, B, E, F)

1. Install gages in the main and pilot air lines.

2. Main air pressure should be equal to or more than top of sequencing range: 13 lb/in^2 (90 kPa) is minimum main pressure for device to function.

3. Slowly increase pilot pressure and note the pressure at which the valve stem travel starts. This pressure should be within ±3/4 lb/in^2 (5 kPa) of the start point setting for the MP953A and MP953B. For the MP953E and MP953F models the pressure should be within ±1 lb/in^2 (7 kPa) of the start point.

4. Continue increasing the pilot pressure until the valve stem travel is complete. This pressure should be the start point pressure plus the range setting.

5. If necessary make fine adjustments with the start point adjustment knob.

> CAUTION
>
> ON MP953A and MP953B models, loosen the cover locking screw before turning the start point adjustment knob.

ADJUSTMENTS

TO SET OPERATING RANGE, MP953A AND B

1. Using wrench, loosen the cover locking screw (Fig. 2).

2. Unscrew the start point adjustment knob and remove cover.

   a. For three lb/in^2 (21 kPa) range, back all range adjustment screws off to friction stop.
   b. For five lb/in^2 (34 kPa) range, back only the black range adjustment screws to stop and tighten the outer, plated screws.
   c. For ten lb/in^2 (69 kPa) range, tighten all range adjustment screws.

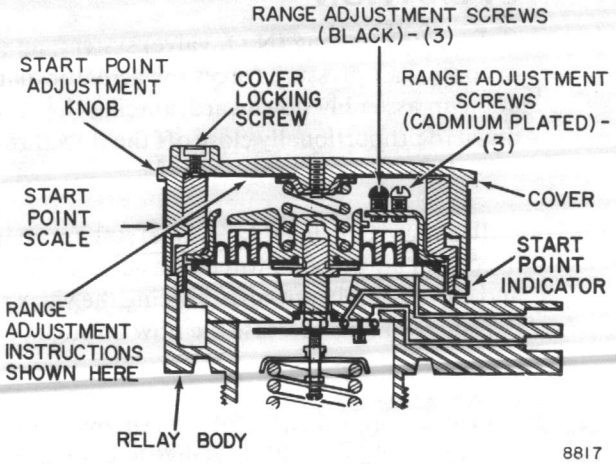

Fig. 2. Adjustment Points of MO953/MP953A and B Gradutrol Relay.

OPERATING RANGE, MP953E AND F

The operating range of the MP953E and MP953F models may be changed by replacing the feedback spring with one for the desired range (see REPAIR section).

START POINT ADJUSTMENT

MP953A AND B POSITIONER (GRADUTROL RELAY)

1. Tighten the cover by turning it until it bottoms on the relay body (Fig. 2).
2. Back off (one turn maximum) until the start point of the correct scale range lines up with the start point indicator near "B" marking.
3. Tighten the cover locking screw until it engages the relay body. Do not overtighten.

MP953E AND F POSITIVE POSITIONER (1982)

Set start point on positioner to valve in job drawings. Only the most critical applications or feedback spring changes will require fine tuning the start point. Each click of the start point knob will adjust the start point 1/4 lb/in^2 (1.7 kPa).

TROUBLESHOOTING

EQUIPMENT REQUIRED

Gage, 0 to 30 lb/in^2 (0 to 207 kPa).

SYMPTOMS AND CORRECTIVE ACTION

Table II lists possible equipment malfunctions and their corrective action. Refer to Figures 3, and 4 Troubleshooting Flowcharts for further troubleshooting.

Table II. Symptoms and Corrective Action.

Symptom	Corrective Action
MP953A, C, or E closes too slowly or MP953B, D, or F opens too slowly.	1. Replace positive positioner filters (see REPAIR section). 2. Replace restrictor if one exists. 3. Add capacity relay if controller capacity is too low for the application.

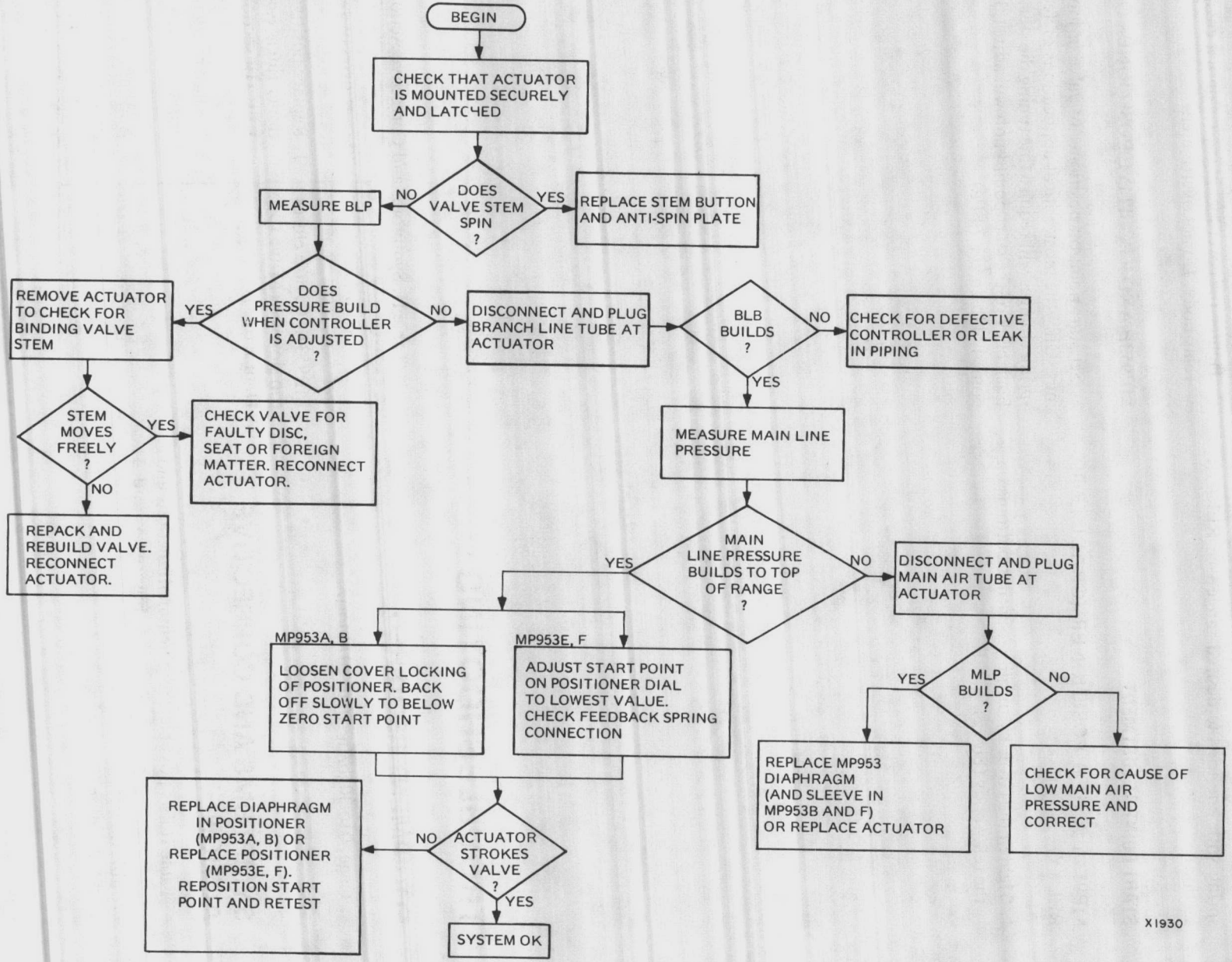

Fig. 3. Troubleshooting Flowchart, MP953A, B, E, F. With Positioner.

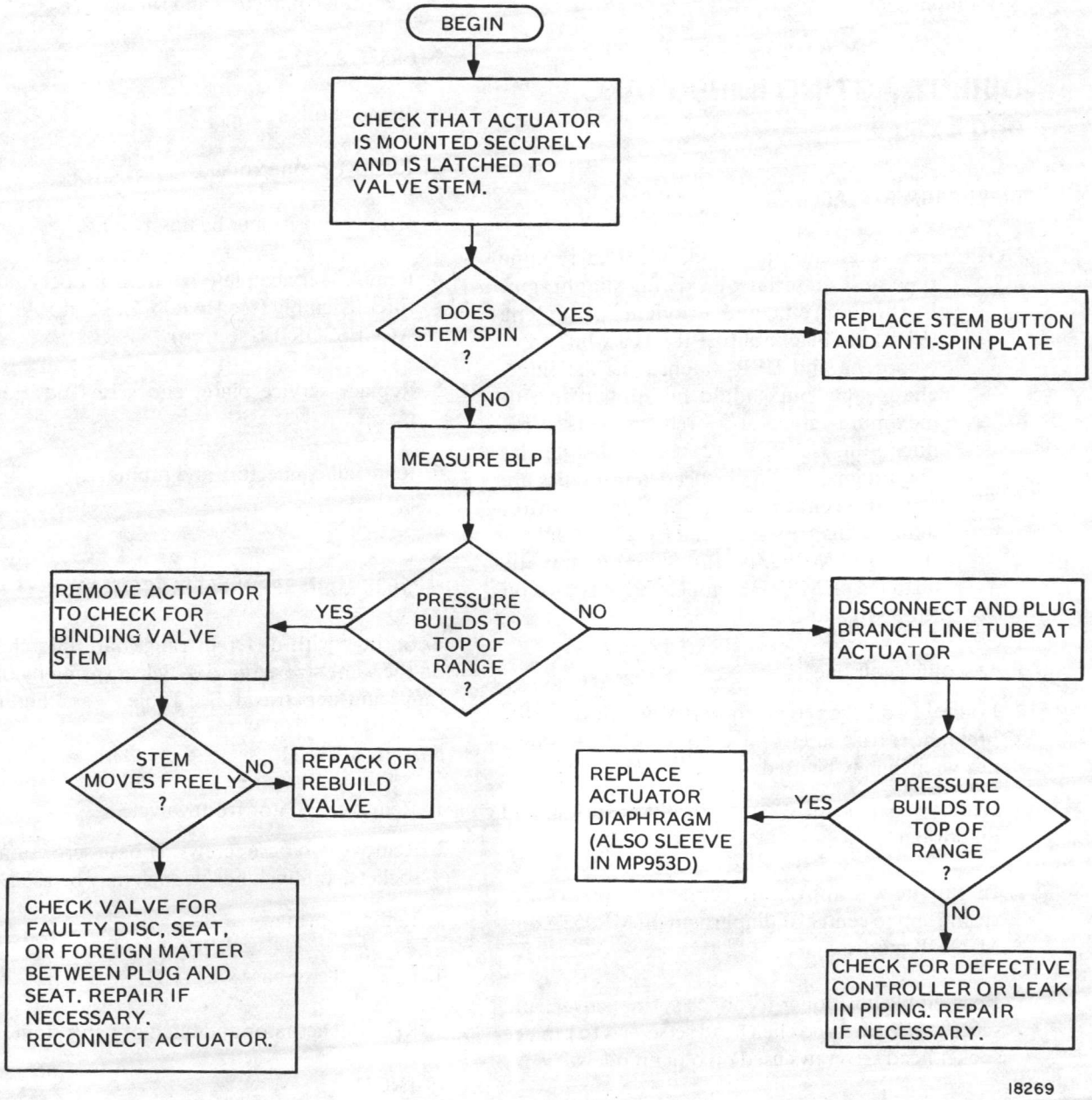

Fig. 4. Troubleshooting Flowchart, MP953C, D.

REPAIR

EQUIPMENT NEEDED

Pliobond glue, or equivalent, to replace MP953A or E diaphragm.

DIRECT-ACTING (MP953A, C, and E)

DIAPHRAGM REPLACEMENT

NOTE: Before attempting replacement, determine type and material of existing diaphragm. Both neoprene and ethylene propylene (EPR) are black, but EPR has a white spot. Neoprene and EPR diaphragms are interchangeable but should be applied to suit maximum temperature requirements. EPR maximum is 250 F (121 C). Old style flat diaphragms and newer beaded roll types are not interchangeable. Silicone (white) diaphragms are used in 250 F (121 C) applications on MP953A and C, and may be installed on MP953E models. EPR is used on MP953B and D models only.

1. Disconnect air lines.
2. Loosen two base screws to partially relieve spring preload. If base screws have Torx socket, 1/8-inch hex wrench may be used.
3. Remove cover screws, cover, feedback spring, and diaphragm.
4. Install new diaphragm, cementing positioner spring cup to center of diaphragm on MP953A and MP953E models.
5 Reassemble positioner feedback spring, cover, and screws. Use cap type allen head setscrews to replace socket head setscrews used on older models.

POSITIONER FILTER REPLACEMENT

MP953A AND B

1. Remove tubing.
2. Remove connectors.
3. Remove filters from relay ports with pointed tool such as an awl.
4. Install foam filters, taking care not to fold or bunch together.
5. Reinstall connectors and tubing.

MP953E AND F

1. Remove tubing.
2. Remove connectors.
3. Remove positioner by unscrewing.
4. Remove service plate from positioner and replace filter assembly (see PARTS LIST in PARTS AND ACCESSORIES section).
5. Replace service plate, and screw positioner into place.
6. Reinstall connectors and tubing.

MP953C MAIN SPRING REPLACEMENT

Springs with different ranges are interchangeable on the same size actuators. Select spring by operating range and stem travel. See Table IV and Figure 12.

5- AND 8-INCH

1. Remove actuator from valve.
2. Remove two base screws. If base screws have Torx sockets, 1/8-inch hex wrench may be used.
3. Replace spring.
4. Reinstall two base setscrews.
5. Reinstall actuator and latch of valve stem.

13-INCH

1. Remove actuator from valve.
2. Loosen two base setscrews.
3. Remove cover, diaphragm, cup and stem retainer.
4. Replace spring.
5. Reinstall stem retainer, cup, diaphragm, cover, and screws.

POSITIONER REPLACEMENT (Old-Style Gradutrol Relay)

1. Disconnect air lines.
2. Unscrew positioner from actuator cover, taking care not to lose feedback spring (Fig. 5).
3. Screw new positioner in place, being sure new "O" ring is properly seated in positioner groove. Reuse old feedback spring as this is not included in 313695J assembly.
4. Tighten only enough to seat "O" ring.
5. Adjust positioner for range and start point (see MAINTENANCE section).

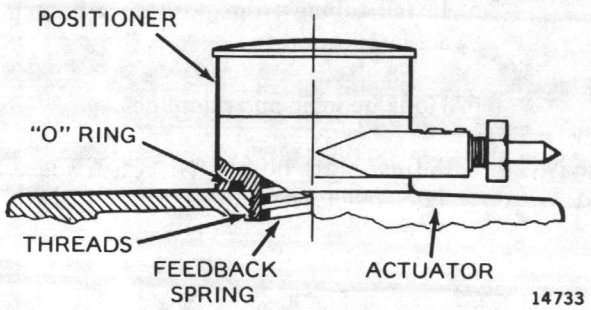

Fig. 5. Old-Style MP953A and B Positioner (Gradutrol Relay).

POSITIONER REPLACEMENT (New-Style 1982)

There are new-style positive positioner retrofit kits available to fit the MP953 actuators. Refer to ACCESSORIES in PARTS AND ACCESSORIES section for kit part number.

1. Remove air lines from positioner assembly.
2. Unscrew and remove positioner assembly and feedback spring from actuator cover.
3. Install feedback spring for desired spring range (see ACCESSORIES in PARTS AND ACCESSORIES section) from positioner retrofit kit into value and to positioner.
4. Screw positioner into place, being sure new "O" ring is properly seated.
5. Hook up main and pilot lines.
6. Adjust start point if necessary (see MAINTENANCE section).

TO CHANGE FEEDBACK SPRING (New-Style Positioner 1982)

1. Remove air lines from positioner assembly.
2. Unscrew and remove positioner assembly.
3. Remove feedback spring by unhooking at both ends and replace with feedback spring for desired range (Fig. 15 or 16).
4. Replace positioner assembly, making sure "O" ring is properly seated.
5. Hook up main and pilot lines.
6. Adjust start point if necessary (see MAINTENANCE section).

REVERSE-ACTING (MP953B, D, and F)

DIAPHRAGM REPLACEMENT

NOTE: Replace both the diaphragm and sleeve (inner seal) when replacement of either is indicated. Use SERVICELINE Kit 14003124-001 for 160 F (71 C) maximum temperature diaphragm replacement. See PARTS LIST in PART AND ACCESSORIES section for high temperature diaphragms.

MP953B AND F

1. Disconnect air lines.
2. Remove cover screws, cover, feedback spring, nut, lockwasher, cup, and diaphragm (see Fig. 11 in PARTS AND ACCESSORIES section).
3. Replace diaphragm.
4. Reinstall cup, lockwasher and nut.
5. Tighten nut only enough to seal diaphragm.
6. Reinstall feedback spring, cover, and screws.
7. Reconnect air lines.

MP953D

1 Disconnect air lines.
2. Remove cover screws, cover and diaphragm.
3. Replace diaphragm.

4. Replace cover and screws.

5. Reconnect air lines.

SLEEVE (Inner Seal) REPLACEMENT

1. Remove diaphragm as in DIAPHRAGM REPLACEMENT.

2. Remove cup, screws, ring, and sleeve (Fig. 11 and 13).

3. Replace sleeve.

4. Reinstall ring, screws, cup, and diaphragm.

MAIN SPRING REPLACEMENT

MP953B AND D

Select spring by operating range and valve stem travel. Springs are interchangeable if operating range and valve stem travel are the same. See Table V and Figures 11 and 13.

MP953F

All MP953F models use spring Part No. 312203-017.

1. Remove diaphragm and sleeve.
2. Remove two base screws and base. If base screws have Torx socket, 1/8-inch hex wrench may be used.
3. Replace main spring.
4. Reinstall base, two screws, sleeve, and diaphragm.
5. Finish as in DIAPHRAGM REPLACEMENT for your specific model.

POSITIONER REPLACEMENT

OLD-STYLE (Gradutrol Relay)

1. Remove air lines and screws from positioner assembly.

2. Remove and replace positioner assembly, being sure bias and feedback springs (Fig. 6) are properly seated.

3. Adjust positioner for proper range and start point (see MAINTENANCE section).

NEW-STYLE POSITIVE POSITIONER (1982)

There is a new positive positioner retrofit kit available for reverse-acting MP953 actuators (see ACCESSORIES in PARTS AND ACCESSORIES section).

1. Remove air lines and screws from positioner reversing bracket.

2. Remove positioner assembly.

3. Install bias spring and feedback spring (for desired spring range) from positioner retrofit kit into valve and to positioner.

4. Install new positioner and bracket assembly onto top of valve.

5. Install tubing from positioner branch port to actuator input.

6. Hook up main and pilot lines.

7. Adjust start point if necessary (see MAINTENANCE section).

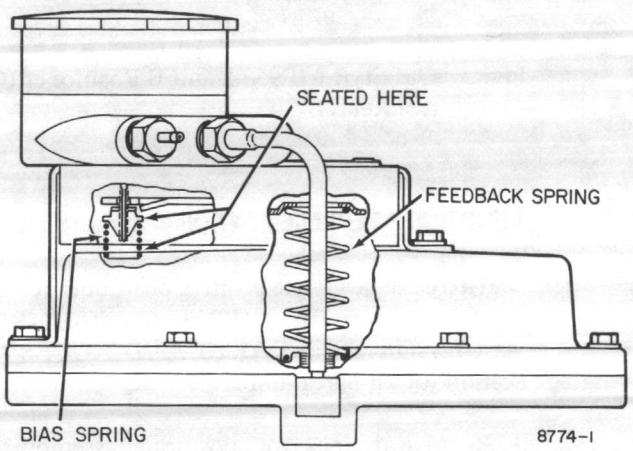

Fig. 6. MP953B Bias Spring and Feedback Spring Position.

TO CHANGE FEEDBACK SPRING (New-Style Positioner 1982)

1. Remove air lines and screws from positioner reversing bracket.

2. Remove positioner assembly.

3. Remove bias spring and feedback spring by unhooking at both ends.

4. Hook up new feedback spring for desired spring range (Fig. 14) and bias spring.

5. Replace positioner and bracket assembly onto top of valve.

6. Install tubing from positioner branch port to actuator input.

7. Hook up main and pilot lines.

8. Adjust start point if necessary (see MAINTENANCE section).

TO PREVENT SPINNING STEMS

Spinning stems may be prevented by locking the stem to the actuator. The 13-inch MP953 does this but the 5- and 8-inch actuators do not. Antispin capability may be field added to the 5- and 8-inch direct-acting actuators by the following procedure.

1. Disconnect air lines.

2. Loosen two base screws to partially relieve spring preload. If base screws have Torx socket, 1/8-inch hex wrench may be used.

3. Remove cover screws, cover, feedback spring, diaphragm, cup spring, retainer, and plate. Replace with Plate, Part No. 311975A.

4. Reassembly actuator.

For 1/2 to 3 inch V5011A and 1/2 to 2 inch V5013A screwed body valves, antispin capability may be added by replacing Stem Button Part No. 310503, with Stem Button Part No. 312495.

5. Remove actuator from valve.

6. Remove Stem Button 310503 and replace with Stem Button 312495.

7. Reassemble actuator to valve.

8. Connect air lines.

OLD STYLE GRADUTROL RELAY ASSEMBLIES

Refer to Figures 7, 8, and 9 and Table III.

Table III. Parts Included in Relay Assembly 313695 Models.

Assembly Parts	B	C	D	E	F	G	J
Basic Relay (lb/in^2 only)	X	X	X	X	X		
Basic Relay (lb/in^2/metric)						X	X
312602 "O" Ring	X	X	X		X		X
315178 Cup	X	X	X	X	X	X	X
313696 Spring	X						
313814 Spring		X			X		
313815 Spring			X				
311750 Diaphragm		X					
312505 Diaphragm					X		

NOTE: The A model is obsolete. It was basic relay plus "O" Ring and Cup. The H Model was the same as the E model except with gray paint. When replacing B, C, D, F, or H models use J model plus needed parts. Replace E model with G model.

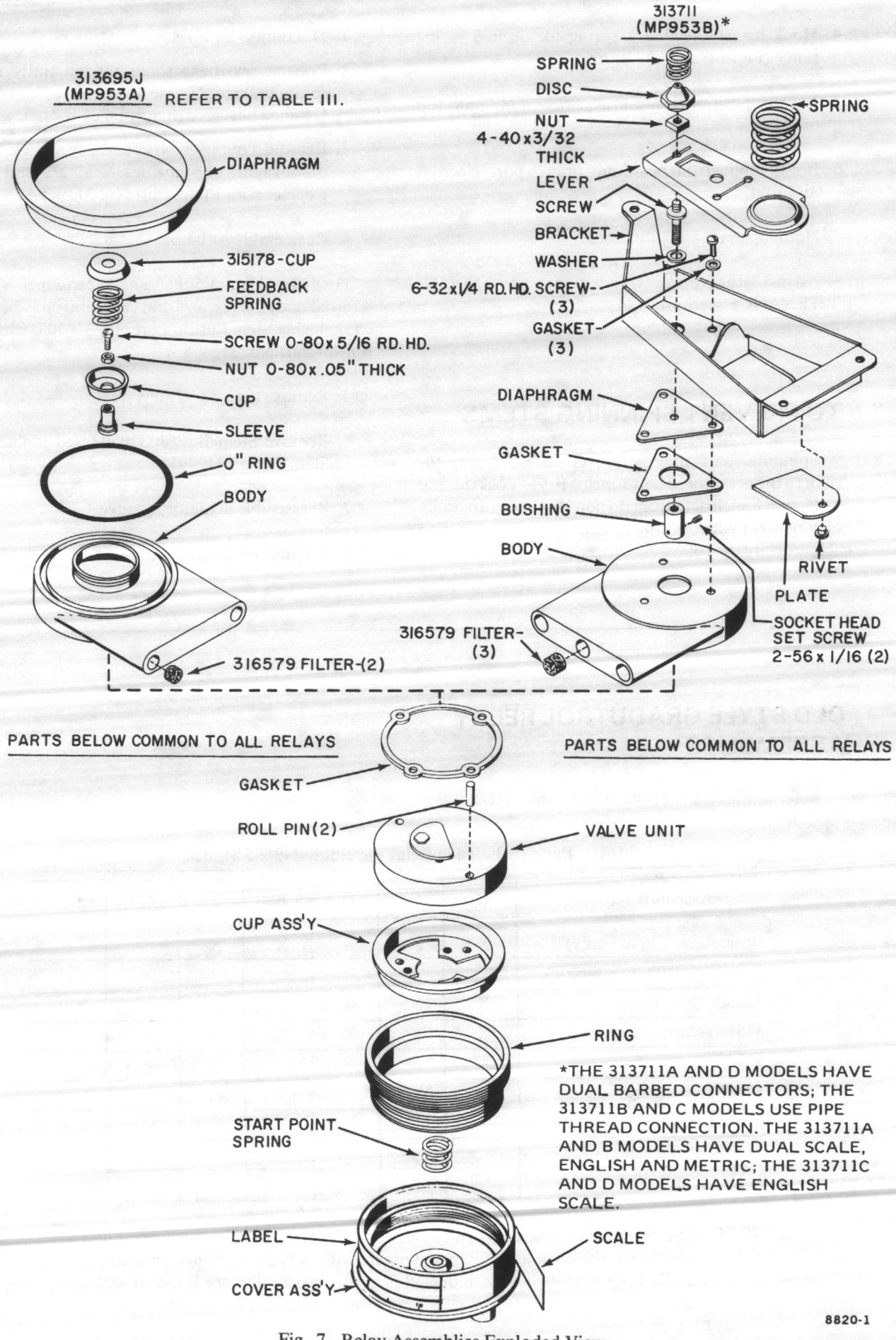

Fig. 7. Relay Assemblies Exploded View.

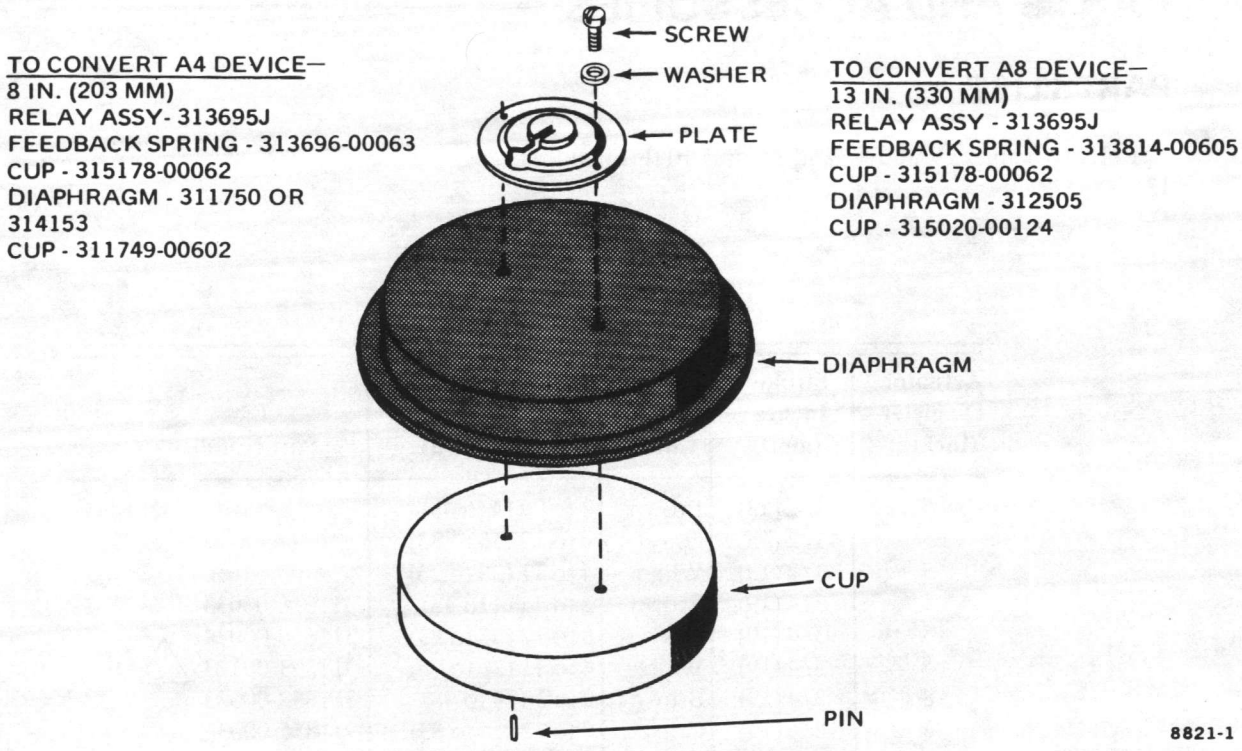

Fig. 8. MO953 Conversion.

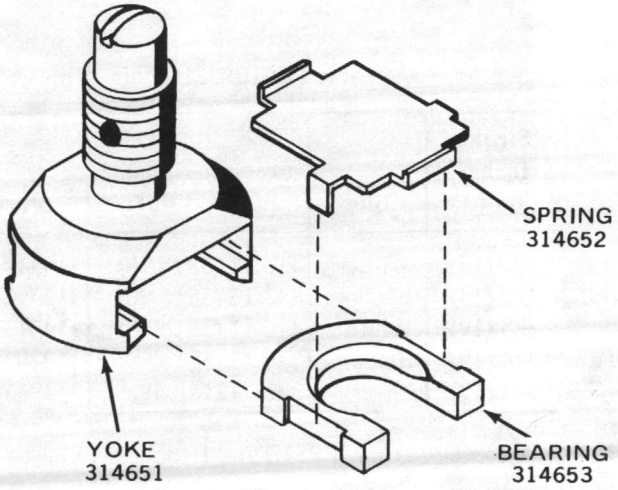

Fig. 9. Yoke Assembly.

PARTS AND ACCESSORIES

PARTS LIST

Refer to Tables IV and V, and Figures 10 through 13.

Table IV. MP953C Mainsprings.

Actuator Diameter (Inches)	Stroke Inches (mm)	Color	Pressure Range lb/in^2 (kPa)	Part Number
5	1/2 (13)	Brown	2 to 7 (14 to 48)	
5	1/2 (13)	Gray	8 to 12 (55 to 83)	
5	1/2 (13)	White	4 to 11 (28 to 76)	
5	3/4 (19)	Brown	2 to 7 (14 to 48)	311616-00033
5	3/4 (19)	Gray	8 to 12 (55 to 83)	311618-00034
5	3/4 (19)	White	4 to 11 (28 to 76)	311393-00123 △1
8	3/4 (19)	Brown	2 to 7 (14 to 48)	311852-00033
8	3/4 (19)	Gray	8 to 12 (55 to 83)	311855-00034
8	3/4 (19)	White	4 to 11 (28 to 76)	311854-00123 △1
8	1-1/2 (38)	White	4 to 11 (28 to 76)	313477-00123
8	1-1/2 (38)	Green	3 to 15 (21 to 103)	14002934-001
13	1-1/2 (38)	Brown	2 to 7 (14 to 48)	312469-00033
13	1-1/2 (38)	White	4 to 11 (28 to 76)	312471-00123 △1

△1 Used on MP953A and E models.

Table V. MP953D Mainsprings.

Stroke Inches (mm)	Color	Pressure Range lb/in^2 (kPa)	Part Number
1/2 (13)	White	4 to 11 (28 to 76)	314314-00123
1/2 (13)	Black	8 to 13 (55 to 90)	312792-00017
3/4 (19)	White	4 to 11 (28 to 76)	314313-00123
3/4 (19)	Black	8 to 13 (55 to 90)	312203-00017 △1
3/4 (19)	Silver	3 to 7 (21 to 48)	314963-00605

△1 Used on MP953B and F models.

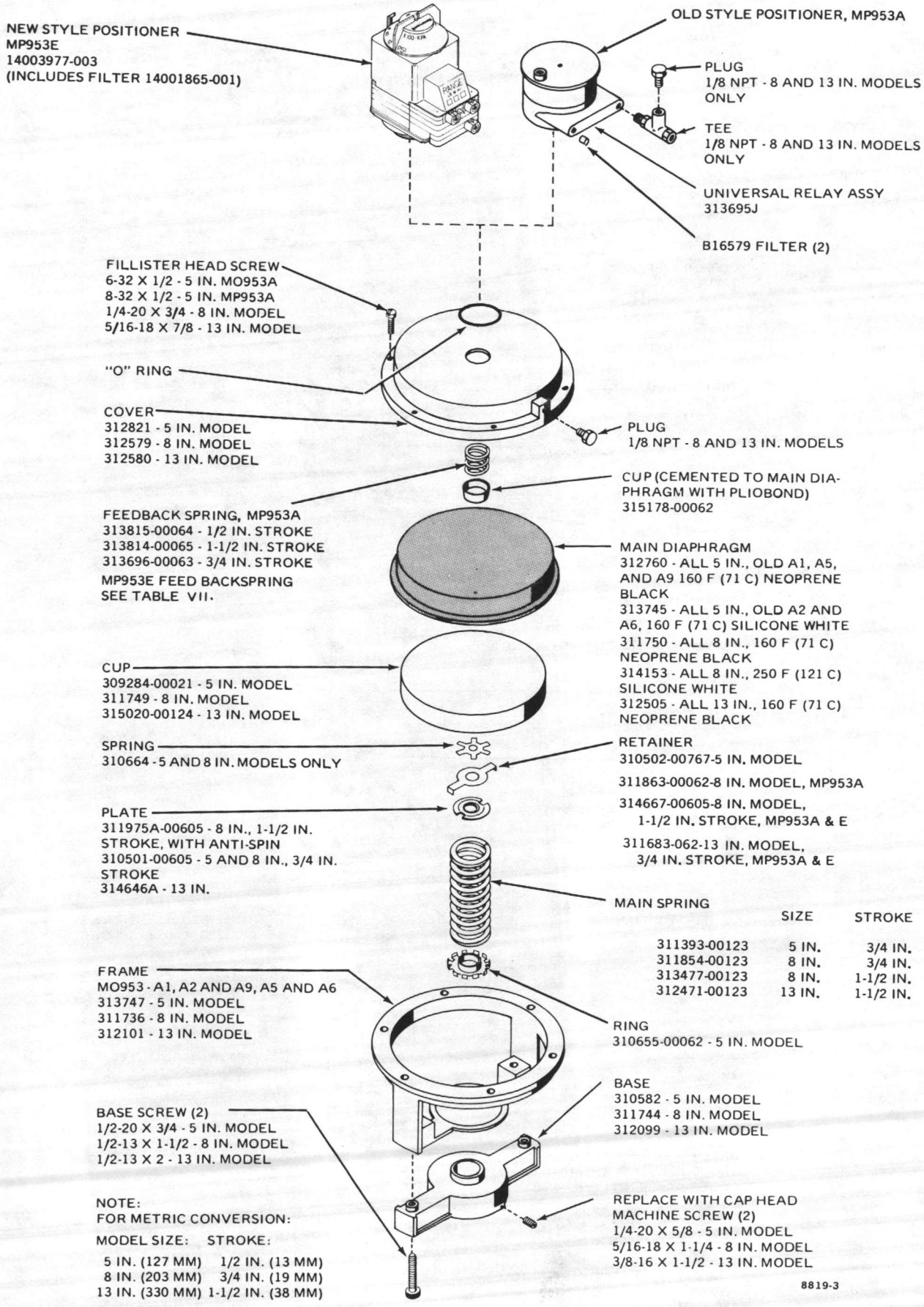

Fig. 10. MO/MP953A and E Exploded View.

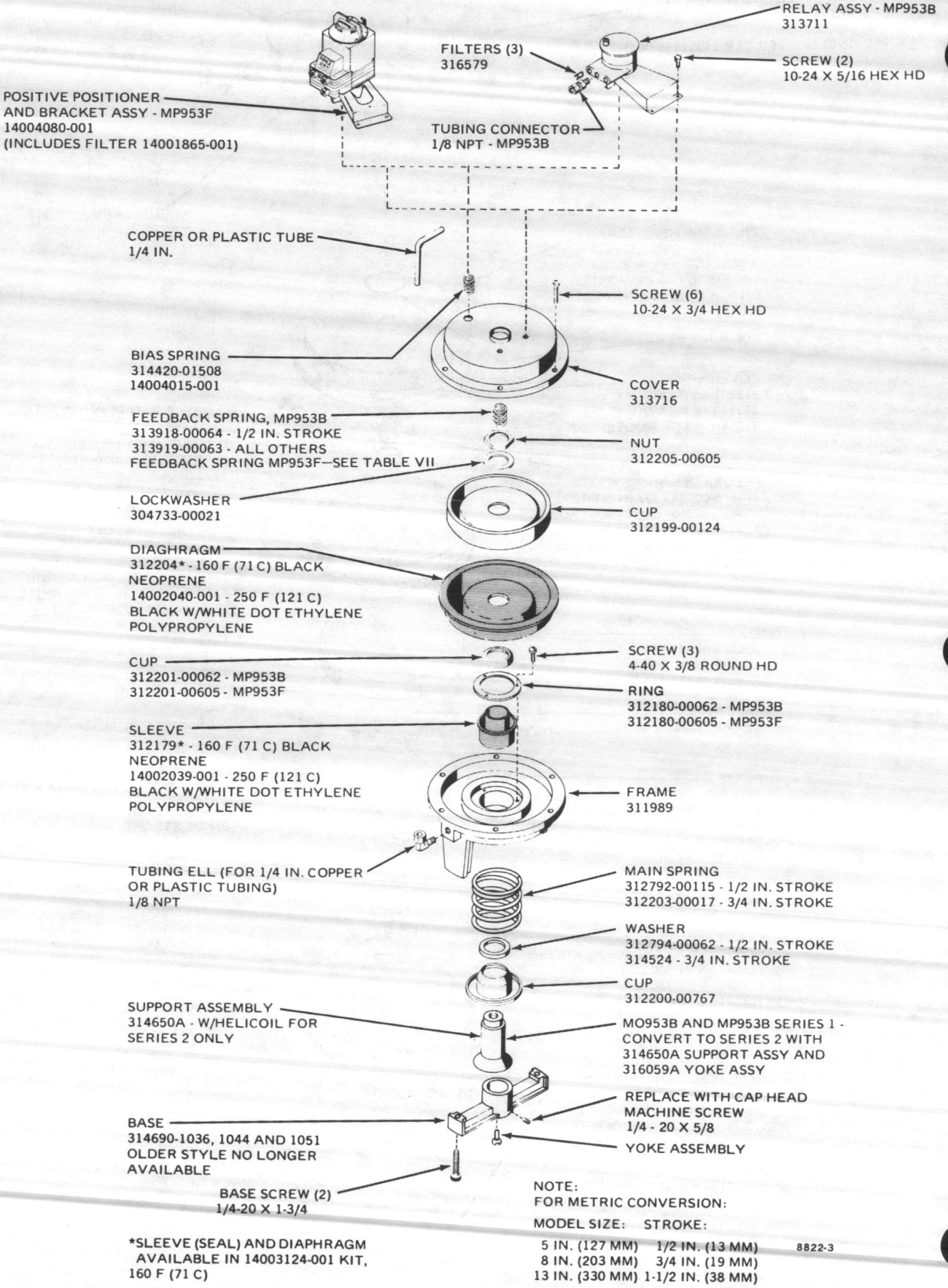

Fig. 11. MO/MP953B and F Exploded View.

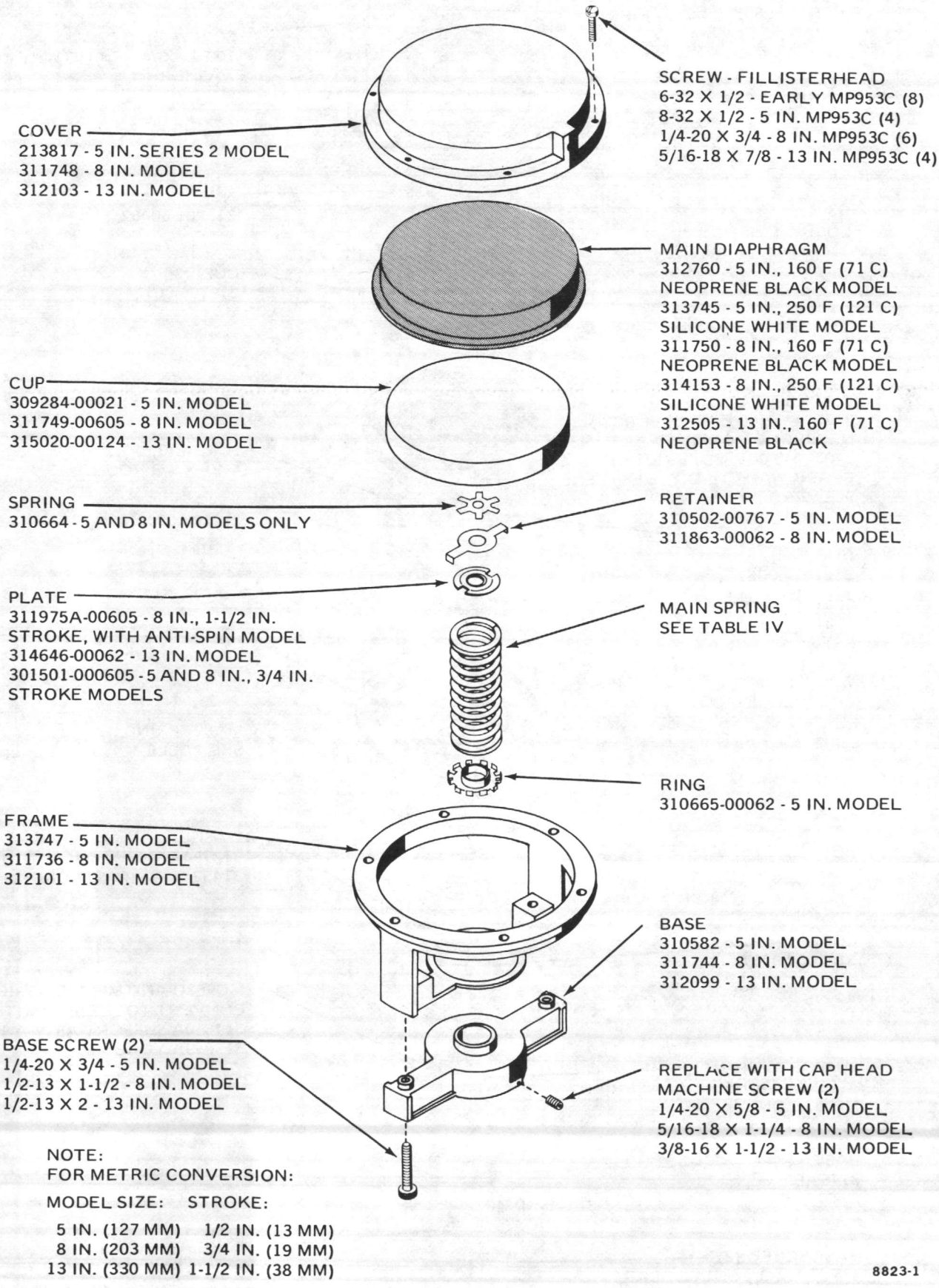

Fig. 12. MO/MP953C Exploded View.

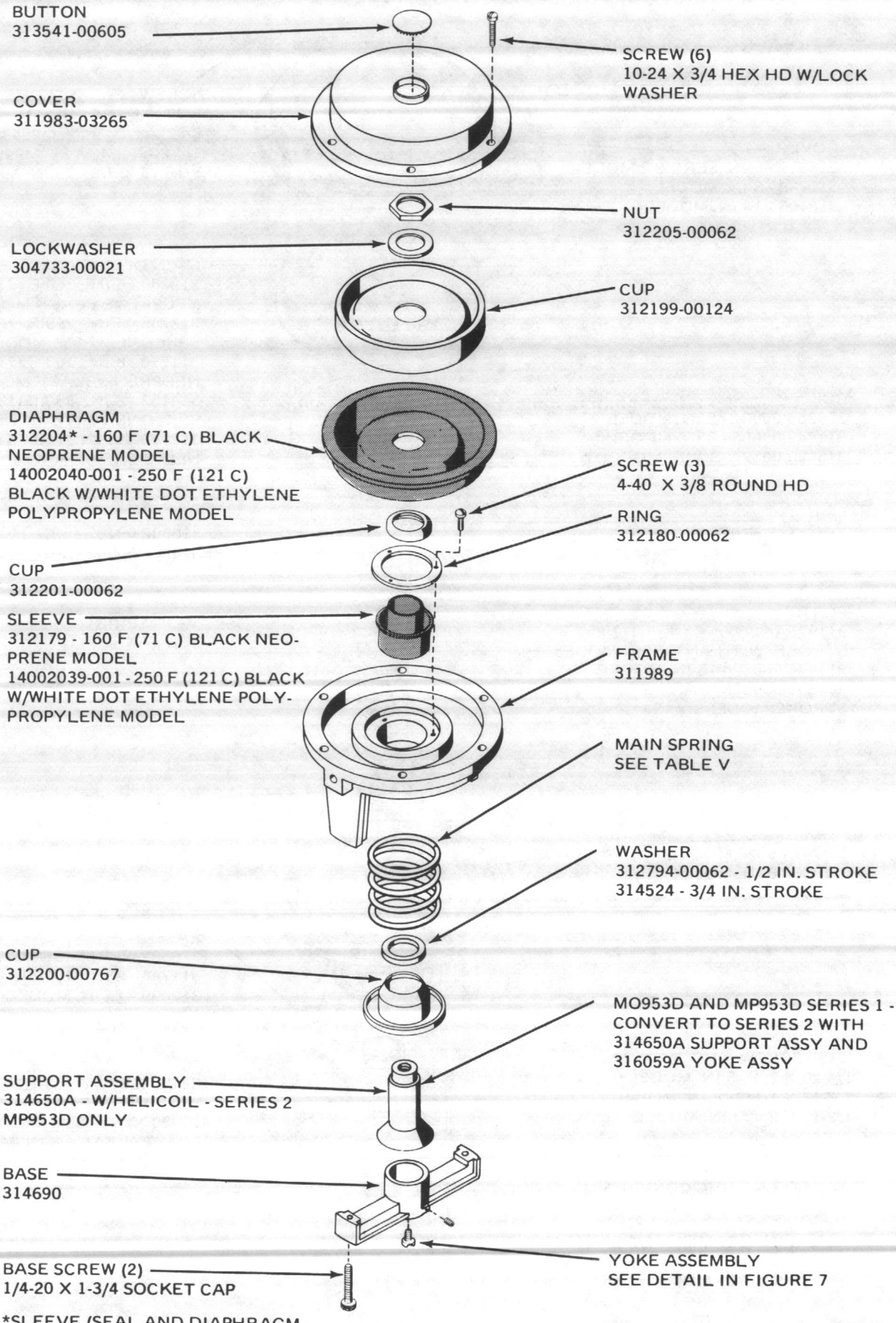

Fig. 13. MO/MP953D Exploded View.

ACCESSORIES

Refer to Tables VI and VII and Figures 14 through 17 for MP953 accessories.

Table VI. MP953 Positive Positioner Retrofit Kits.

Part No.	Description
14004138-001	For reverse-acting valve actuators (Fig. 14).
14004139-001	For 8-inch, 3/4-inch stroke valve actuators (Fig. 16).
14004140-001	For 8- and 13-inch, 1-1/2 inch stroke valve actuators (Fig. 15).
14004214-001	For 5-inch, 3/4-inch stroke valve actuators (Fig. 16).

Table VII. MP953 Feedback Spring Kits Includes 3, 5, and 10 lb/in^2 (21, 34, and 69 kPa) Range Springs.

Part No.	Description
14004213-001	For reverse-acting valve actuators (includes bias).
14004212-001	For 1-1/2 inch (38 mm) stroke D.A. valves.
14004211-001	For 3/4-inch (19 mm) stroke D.A. valves.

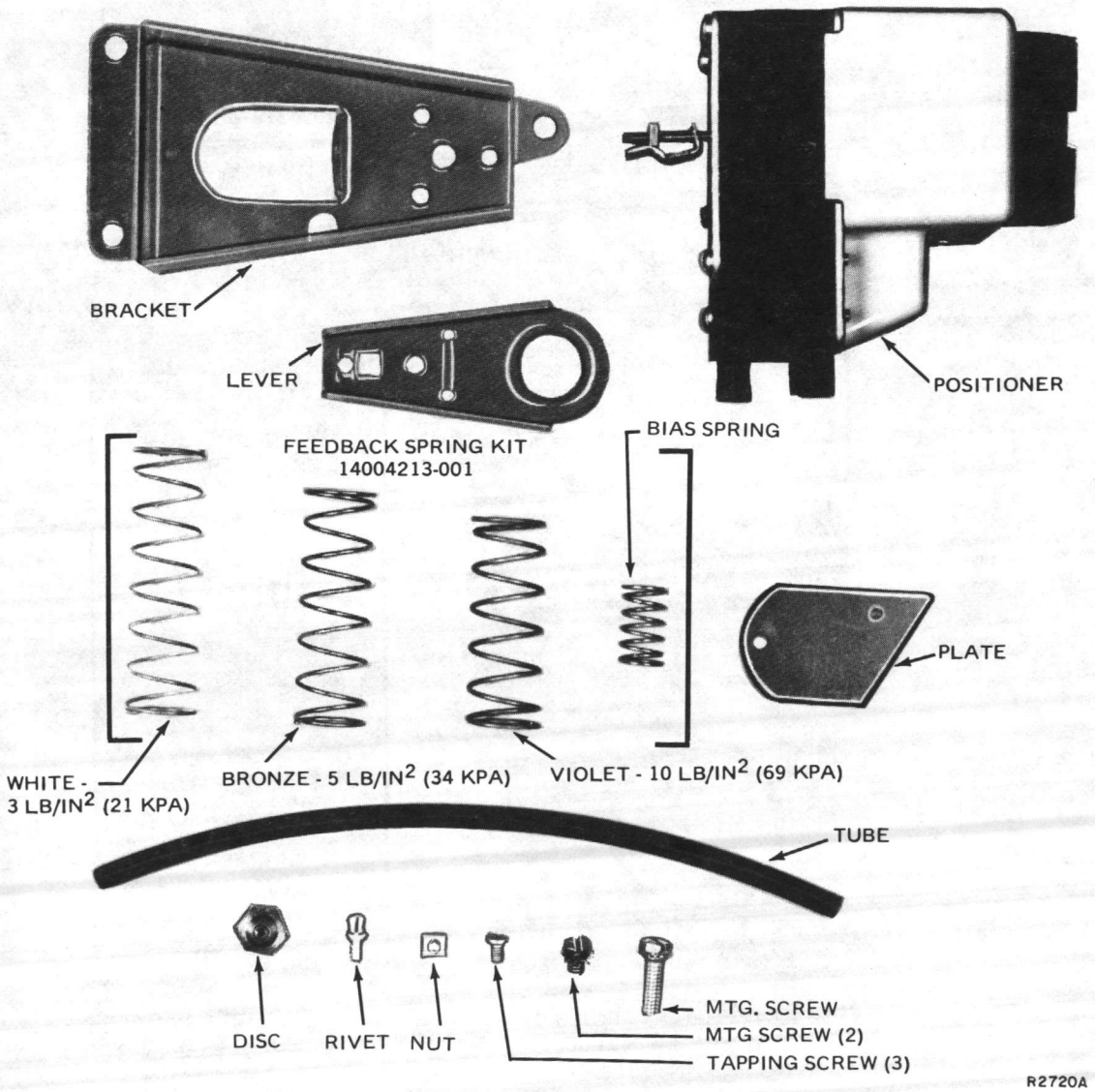

Fig. 14. Positive Positioner Retrofit Kit, Part No. 14004138-001.

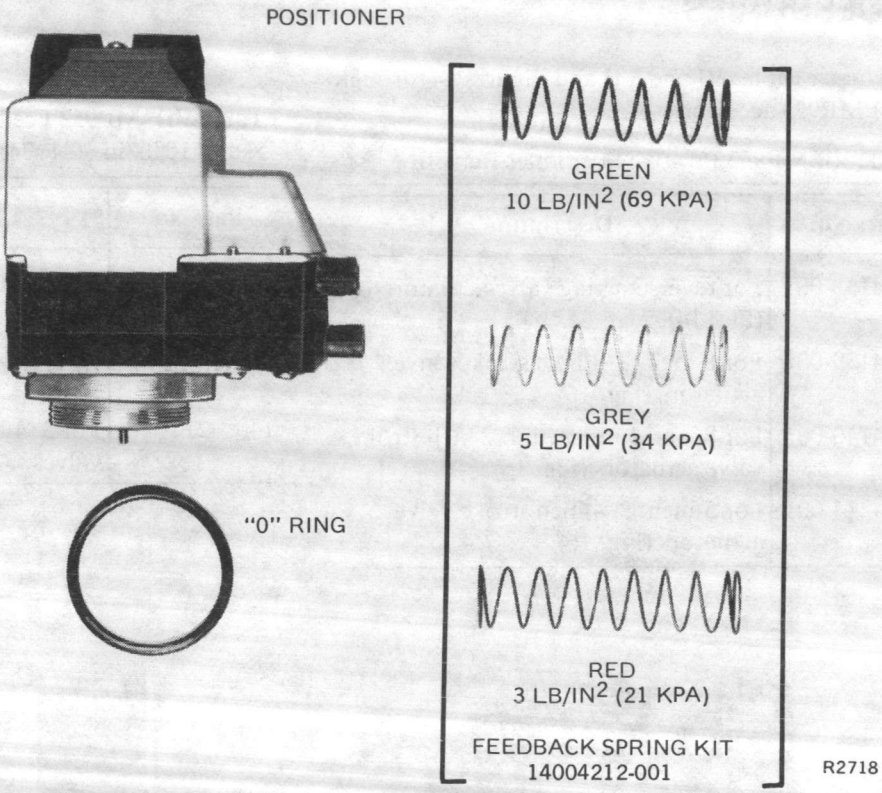

Fig. 15. Positive Positioner Retrofit Kit, Part No. 14004140-001.

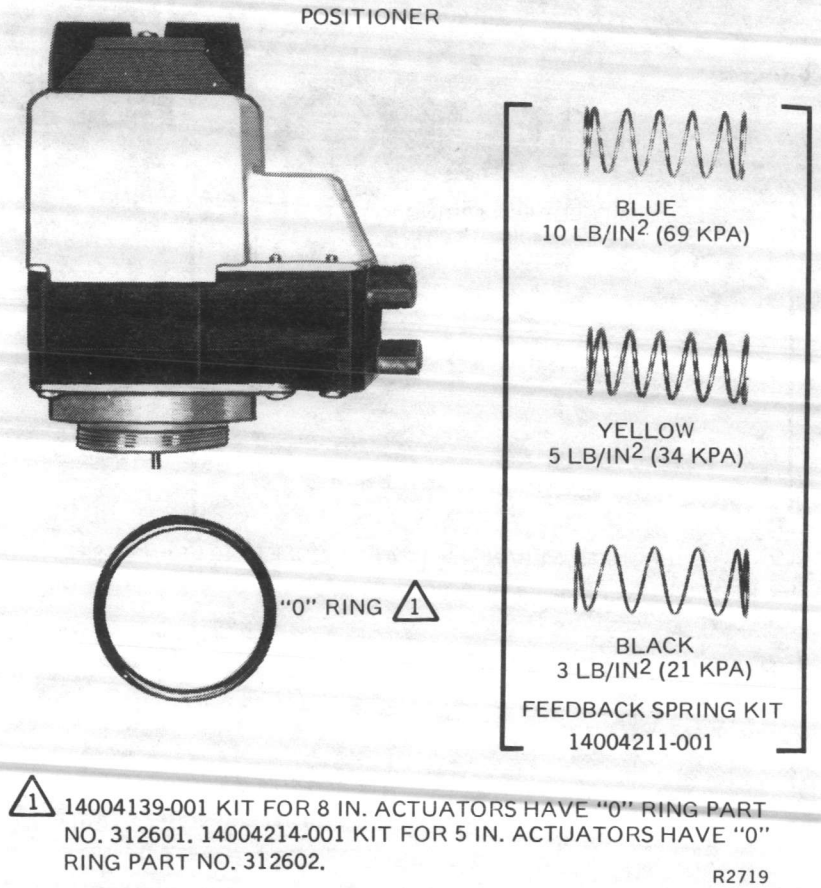

Fig. 16. Positive Positioner Retrofit Kits, Part No. 14004139-001 and14004214-001.

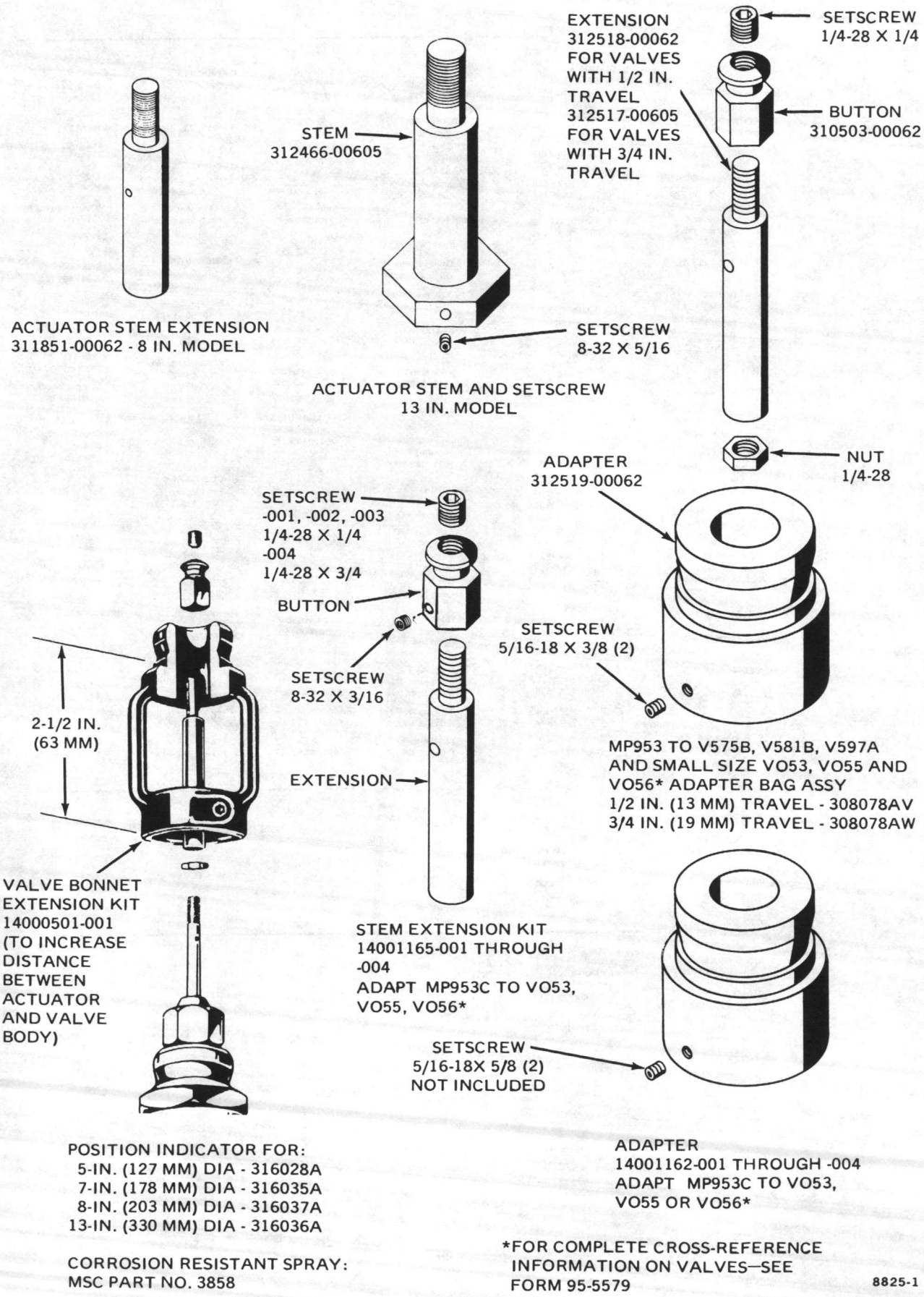

Fig. 17. MP953 Accessories.

SALES AND SERVICE

ALABAMA
Birmingham, AL
(205) 323-2431
Mobile, AL
(800) 633-1644

ALASKA
Anchorage, AK
(907) 274-0551

ARIZONA
Phoenix, AZ
(602) 861-4512
Tucson, AZ
(602) 795-4209

ARKANSAS
Little Rock, AR
(501) 664-0070

CALIFORNIA
Irvine, CA
(714) 557-6392
Los Angeles, CA
(213) 726-6161
Sacramento, CA
(916) 485-2221
San Diego, CA
(714) 292-5311
San Jose, CA
(415) 957-2674
San Francisco, CA
(415) 957-2674

COLORADO
Denver, CO
(303) 779-6295

CONNECTICUT
Hartford, CT
(203) 549-3800

DELAWARE
Wilmington, DE
(302) 762-3100

DISTRICT OF COLUMBIA
Washington DC
(703) 827-3705

FLORIDA
Jacksonville, FL
(904) 396-6971
Miami, FL
(305) 592-8140
Orlando, FL
(305) 894-3131
Tampa, FL
(813) 877-6426

GEORGIA
Atlanta, GA
(404) 982-2495

HAWAII
Honolulu, HI
(808) 537-5514

ILLINOIS
Chicago North, IL
(312) 478-9266
Chicago South (Lansing), IL
(312) 568-4200
Elgin, IL
(312) 697-7880
Peoria, IL
(309) 692-0610

INDIANA
Fort Wayne, IN
(219) 482-9654
Indianapolis, IN
(317) 243-0831

IOWA
Davenport, IA
(319) 359-3441
Des Moines, IA
(515) 288-3601

KENTUCKY
Louisville, KY
(502) 459-5970

LOUISIANA
Baton Rouge, LA
(504) 924-8626
New Orleans, LA
(504) 456-7232
Shreveport, LA
(214) 387-5467

MAINE
Portland, ME
(207) 775-3501

MARYLAND
Baltimore, MD
(301) 828-0900

MASSACHUSETTS
Boston, MA
(617) 962-0250

MICHIGAN
Detroit, MI
(313) 478-1600
Grand Rapids, MI
(616) 247-4811
Saginaw, MI
(517) 792-8707

MINNESOTA
Duluth, MN
(612) 770-8557
Minneapolis, MN
(612) 830-3880
St. Paul, MN
(612) 770-8557

MISSISSIPPI
Jackson, MS
(601) 982-2090

MISSOURI
Kansas City, MO
(816) 358-4200
St. Louis, MO
(314) 576-2635

NEBRASKA
Omaha, NE
(402) 331-3200

NEW HAMPSHIRE
Bedford, NH
(603) 625-6502

NEW JERSEY
Mt. Laurel, NJ
(609) 234-2224
Parsippany, NJ
(201) 263-2225
Westfield, NJ
(201) 233-9200

NEW MEXICO
Albuquerque, NM
(505) 884-1070

NEW YORK
Albany, NY
(518) 456-7000
Buffalo, NY
(716) 689-0200
Brooklyn, NY
(212) 392-4300
Manhattan, NY
(212) 392-4300
Rochester, NY
(716) 424-2700
Syracuse, NY
(315) 451-4000
White Plains, NY
(914) 948-7511
Woodbury, NY
(516) 931-1506

NORTH CAROLINA
Charlotte, NC
(704) 364-4770
Greensboro, NC
(919) 292-1556

NORTH DAKOTA
Fargo, ND
(701) 235-4221

OHIO
Akron, OH
(216) 733-2244
Cincinnati, OH
(513) 745-7151
Cleveland, OH
(216) 459-6057
Columbus, OH
(614) 486-5971
Dayton, OH
(513) 237-4035
Toledo, OH
(419) 473-9721

OKLAHOMA
Oklahoma City, OK
(405) 848-2811
Tulsa, OK
(918) 437-5934

OREGON
Eugene, OR
(503) 485-2251
Portland, OR
(503) 245-0731

PENNSYLVANIA
Harrisburg, PA
(717) 564-8000
Philadelphia, PA
(215) 666-8302
Pittsburgh, PA
(412) 928-4235
Wilkes-Barre, PA
(717) 654-2477

PUERTO RICO
San Juan, PR
(809) 792-7075

RHODE ISLAND
Providence, RI
(401) 438-6000

SOUTH CAROLINA
Columbia, SC
(803) 765-9426
Greenville, SC
(803) 232-2437

SOUTH DAKOTA
Sioux Falls, SD
(605) 336-0986

TENNESSEE
Memphis, TN
(901) 345-6222
Nashville, TN
(615) 385-3400

TEXAS
Dallas, TX
(214) 387-5467
El Paso, TX
(915) 533-9924
Houston, TX
(713) 780-6603
Lubbock, TX
(806) 762-5202
San Antonio, TX
(512) 341-4691

UTAH
Salt Lake City, UT
(801) 487-0681

VIRGINIA
Richmond, VA
(804) 285-8211
Roanoke, VA
(703) 989-5201
Virginia Beach, VA
(804) 461-0263

WASHINGTON
Seattle, WA
(206) 233-2150
Spokane, WA
(509) 534-5022

WEST VIRGINIA
Charleston, WV
(513) 745-7151
Clarksburg, WV
(304) 623-6551

WISCONSIN
Appleton, WI
(414) 733-4491
Madison, WI
(608) 222-3400
Milwaukee, WI
(414) 784-6260

WYOMING
Casper, WY
(307) 265-9374

CANADA — Honeywell Limited – Honeywell Limitée, 740 Ellesmere Road – Scarborough, Ont

ALBERTA
Calgary
Edmonton

BRITISH COLUMBIA
Vacouver

MANITOBA
Winnipeg

NEW BRUNSWICK
Moncton

NEW FOUNDLAND
St John's

NOVA SCOTIA
Halifax

ONTARIO
Hamilton
London
Ottawa
Sudbury
Toronto
Windsor

QUEBEC
Montreal
Quebec

SASKATCHEWAN
Regina
Saskatoon

INTERNATIONAL

ARGENTINA
BUENOS AIRES

AUSTRALIA
WATERLOO, N.S.W.
Adalaide
Brisbane
Canberra
Darwin
Hobart
Melbourne
Newcastle
Perth
Townsville

AUSTRIA
VIENNA
Graz
Innsbruck
Klagenfurt
Linz

BELGIUM
BRUSSELS
Gent
Liege/Grivegnee
Luxembourg

BRAZIL
SAO PAULO
Rio de Janeiro

DENMARK
COPENHAGEN
Aarhus
Fredericia

DOMINICAN REPUBLIC
SANTO DOMINGO

FINLAND
ESPOO
Tampere

FRANCE
BOIS D'ARCY
Lyon
Marseille

GERMANY
OFFENBACH/Main
Dusseldorf
Echterdingen
Hamburg
Hannover-Langenhagen
Mannheim
Muenchen
Nuernberg

GREECE
ATHENS

HONG KONG

ITALY
MILAN
Bologna
Firenze
Padova
Rome
Torino

JAPAN
TOKYO
Hiroshima
Kokura
Nagoya
Osaka

KUWAIT

MEXICO
MEXICO CITY, D.F.
Monterrey, Nuevo Leon

NETHERLANDS
AMSTERDAM
Schiphol-Centrum

NEW ZEALAND
AUCKLAND
Christchurch
Dunedin
Wellington

NORWAY
OSLO
Bergen
Stavanger
Tromso
Trondheim

PUERTO RICO
San Juan

SAUDI ARABIA
DAMMAM (Dhahran)

SINGAPORE

SOUTH AFRICA
JOHANNESBURG (Transvall)
Cape Town
Durban
Port Elizabeth
Pretoria

SPAIN
MADRID
Barcelona
Gijon
Las Arenas (Bilbao)

SWEDEN
STOCKHOLM
Goteborg
Malmo
Sundsvall

SWITZERLAND
ZURICH
Basel
Bern
Geneva

TAIWAN
TAIPEI

UNITED ARAB EMIRATES
SHARJAH

UNITED KINGDOM
LONDON (BRACKNELL)
Aberdeen (Scotland)
Belfast (N. Ireland)
Cardiff (S. Wales)
Cheadle Hulme, Chesire
Dublin (Ireland)
East Kilbride, Glasgow (Scotland)
Erdington, Birmingham
Maidenhead, Berkshire
Sheffield, Yorkshire
Stockton-on-Tees, Cleveland

VENEZUELA
CARACAS
Maracaibo
Puerto Ordaz
Valencia

HONEYWELL•Minneapolis, Minnesota 55408•Scarborough, Ontario•Subsidiaries and Affiliates Around the World.•Printed in U.S.A.

Honeywell

Comfort Control Systems

VP525A
PNEUMATIC VALVE

Service Data

GENERAL

The following information is for service and repair of the VP525A Pneumatic Valve. Available replacement parts for this valve are identified by part number under REPAIR Parts List.

The VP525A has a nominal body pressure rating of 250 psi maximum for solder body versions or 150 psi maximum for screwed union body versions. Solder body models have soldered tubing connections and screwed union body models have NPT connections. The controlled medium temperature and pressure rating is 240F and 150 psi maximum with a maximum safe air pressure of 25 psi.

APPLICATION

These normally-open valves typically provide control of two-pipe hot water or steam systems.

OPERATION (See Fig. 1)

An increase in control pressure from a direct acting space thermostat causes the normally-open valve to close proportionately to the increase, modulating the flow thru the valve.

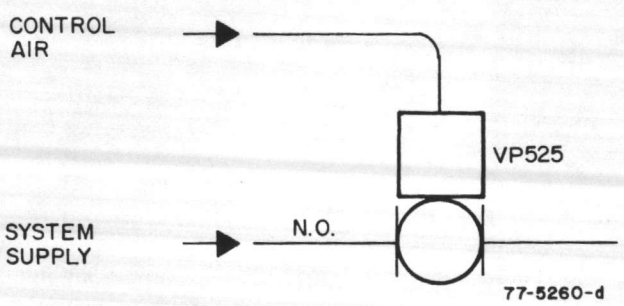

Fig. 1. VP525A Typical Operation.

Rev. 12-76
J.L.G.

Form Number 75-5544
Commercial Div.

TROUBLE SHOOTING (Normally Open Valves)

UNDERHEATING

If room temperature is lower than thermostat setting, check air pressure at valve.

1. No air pressure:

   a. If heat is present in piping to valve, the valve (or steam trap) is stuck closed. If valve is stuck, free it by removing operator and operating valve stem manually.
   b. If evidence exists of leakage around valve stem, repack the valve (see REPAIR Packing Replacement).
   c. If binding of stem or sticky operation persists, replace the top and insert assembly (or entire valve).

2. Air pressure present:

   Valve opens when air line is removed. Cap line and check thermostat operation and calibration.

OVERHEATING

If room temperature is higher than thermostat setting, check air pressure at valve.

1. No or low air pressure:

   Cap line and check thermostat operation and calibration. Check for air leaks in line.

2. Air pressure present:

   a. If pressure decreases when connected to actuator, diaphragm is defective. Replace actuator assembly (see REPAIR Diaphragm Replacement).
   b. If air pressure is maintained and heating medium still flows through valve, the valve seat or disc is defective. Disassemble valve to replace these parts (see REPAIR Stem and Disc Holder Assy and/or Valve Seat Replacement). Higher Cv models do not include a removable valve seat. On these models, if the seat is defective replace the complete valve.

REPAIR

DIAPHRAGM REPLACEMENT

For faulty diaphragm replace complete actuator assembly (part number 14003102-001, plastic construction; or part number 14003648-001, metal construction). See Figure 4.

To replace:

1. Remove supply air tubing at actuator fitting.
2. Remove cover locking fastener.
3. Turn cover counterclockwise to disengage bonnet locking tabs and lift off.
4. Install replacement in reverse manner.

PACKING REPLACEMENT

Repack valves without system shutdown.

To replace:

1. Remove actuator as in Diaphragm Replacement.
2. Disengage spring retaining cup and remove coil spring.
3. Holding stem in up position, remove packing nut, packing wafers, packing cup and packing spring.
4. Clean and inspect all parts before installing new packing. Clean packing gland, spring, etc. with tricloroethylene or similar solvent. Inspect valve stem for worn or scored areas. If replacement is necessary see Stem & Disc Holder Assy and/or Valve Seat Replacement. Reassemble components in reverse manner and replace actuator.

STEM & DISC HOLDER ASSY AND/OR VALVE SEAT REPLACEMENT

Shutdown and remove pressure from the system before valve disassembly.

To replace:

1. Remove actuator, disengage spring retaining cup and remove spring.
2. Remove packing nut and packing components.
3. Remove bonnet from valve body for access to the stem, disc or seat. A thin open ended wrench is necessary to fit between the valve body and valve top. Use a 1-1/4 inch wrench (C & S Warehouse No. 638) for solder body valves. Use a 1-1/2 inch wrench (C & S No. 641) for 1/2-inch screwed bodies and a 1-7/8 inch wrench (C & S No. 644) for 3/4-inch screwed valve assemblies.
4. Install new stem and disc assembly or top and insert assembly. Inspect valve seat and replace if necessary. Reassemble.
5. Restore air connection to actuator and turn on system.

Table 1. Replacement Top and Insert Assemblies (See Fig. 2).

Serviceline Kits for Screwed Union Body Valves:		
14003115-001	Rebuilds	VP525A1069, 1077, 1085, 1390*, 1408*, and 1460 (1/2-inch valves, Cv of 2.0 or less)
14003117-001	Rebuilds	VP525A1093, 1101, 1127, 1119, 1135, and 1176 (3/4-inch valves, Cv of 3.0)
14003118-001	Rebuilds	VP525A1184, 1192, 1200, 1218 and 1226 (3/4-inch valves, Cv of 5.0)
14003119-001	Rebuilds	VP525A1143, 1150, and 1168 (1/2-inch valves, Cv of 3.0)
Serviceline Kits for Solder Body Valves:		
14003299-001	Rebuilds	VP525A1002, 1012, and 1028 (5/8-inch OD body of 1.6 Cv)
14003300-001	Rebuilds	VP525A1036, 1044, and 1051 (7/8-inch OD body of 2.5 Cv)

*Replacement Top and Insert Assembly increases Cv of VP525A1408 and 1390 to 1.6 Cv.

All Serviceline Kits include three springs (2-5, 3-10, 8-11 psi [15-35, 20-70, and 55-75 kPa]) and replacement seats where applicable.

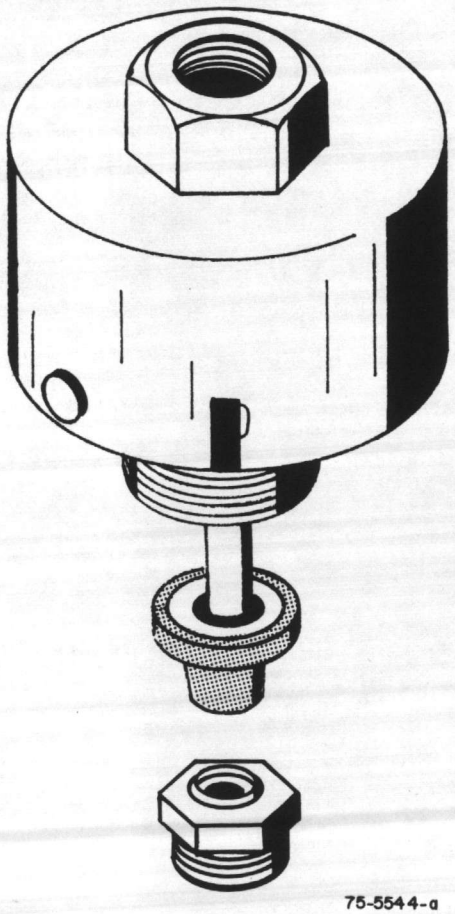

Fig. 2. Top and Insert Assembly.

SALES and SERVICE from Coast to Coast . . .

ALABAMA
Birmingham
Huntsville
Mobile

ALASKA
Anchorage
Fairbanks

ARIZONA
Phoenix

ARKANSAS
Little Rock

CALIFORNIA
Beverly Hills
El Segundo
Long Beach
Los Angeles
Sacramento
San Diego
San Francisco
Sunnyvale

COLORADO
Englewood (Denver)

CONNECTICUT
Hartford
Milford

DELAWARE
Wilmington

DIST. OF COLUMBIA
Arlington
McLean

FLORIDA
Coral Gables
Jacksonville
Orlando
Shalimar
Tampa

GEORGIA
Atlanta

HAWAII
Honolulu

IDAHO
Boise

ILLINOIS
Champaign
Chicago
Lansing
Peoria
Rockford

INDIANA
Fort Wayne
Indianapolis
South Bend

IOWA
Bettendorf
(Davenport)
Cedar Rapids
Des Moines

KANSAS
Wichita

KENTUCKY
Louisville

LOUISIANA
Baton Rouge
Metairie
(New Orleans)
Shreveport

MAINE
Portland

MARYLAND
LaVale
Lutherville (Baltimore)

MASSACHUSETTS
Boston

MICHIGAN
Detroit
Grand Rapids
Lansing
Saginaw

MINNESOTA
Minneapolis

MISSISSIPPI
Jackson

MISSOURI
Kansas City
Springfield
St. Louis

MONTANA
Billings

NEBRASKA
Omaha

NEW HAMPSHIRE
Manchester

NEW JERSEY
Westfield

NEW MEXICO
Albuquerque

NEW YORK
Albany
Amherst
Binghamton
Long Island City
Rochester
Syracuse
White Plains

NORTH CAROLINA
Charlotte
Greensboro

NORTH DAKOTA
Fargo

OHIO
Akron
Cincinnati
Cleveland
Columbus
Dayton
Fairborn
Toledo
Youngstown

OKLAHOMA
Oklahoma City
Tulsa

OREGON
Eugene
Portland

PENNSYLVANIA
Allentown
Avoca (Scranton)
Harrisburg
Philadelphia
Pittsburgh

PUERTO RICO
San Juan

RHODE ISLAND
East Providence

SOUTH CAROLINA
Columbia
Greenville

SOUTH DAKOTA
Sioux Falls

TENNESSEE
Chattanooga
Knoxville
Memphis
Nashville

TEXAS
Amarillo
Corpus Christi
Dallas
El Paso
Fort Worth
Houston
Lubbock
Odessa
San Antonio

UTAH
Salt Lake City

VIRGINIA
Norfolk
Richmond
Roanoke

WASHINGTON
Mercer Island
(Seattle)
Spokane
Tacoma

WEST VIRGINIA
Charleston

WISCONSIN
Appleton
Madison
Milwaukee

. . . and across Canada: HONEYWELL CONTROLS LIMITED

Head Office & Factory: 740 Ellesmere Road, Scarborough, Ontario

ALBERTA
Calgary
Edmonton

BRITISH COLUMBIA
Vancouver

MANITOBA
Winnipeg

NEW BRUNSWICK
Saint John

NEW FOUNDLAND
Saint John's

NOVA SCOTIA
Halifax

ONTARIO
Hamilton
London
Ottawa
Sudbury
Toronto
Windsor

QUEBEC
Montreal
Quebec
Sherbrooke

SASKATCHEWAN
Regina
Saskatoon

. . . and around the World: HONEYWELL INTERNATIONAL*

General Offices: Minneapolis, Minn. 55408

SUBSIDIARIES AND AFFILIATES†

ARGENTINA
Buenos Aires

AUSTRALIA*
WATERLOO, N.S.W.
Adelaide
Canberra
Hamilton
Hobart
Perth
South Melbourne
Queensland

AUSTRIA
VIENNA
Graz
Innsbruck
Klagenfurt
Linz

BELGIUM
BRUSSELS
Antwerpen
Charleroi
Ghent
Liege/Grivegnee
Luxembourg

BRAZIL*
SAO PAULO
Rio de Janeiro

DENMARK
COPENHAGEN
Aarhus

FINLAND
HELSINKI
Kuopio
Tampere

FRANCE*
PARIS: Malakoff
Lille
Lyon
Marseilles
Strasbourg
Toulouse

GERMANY*
OFFENBACH/MAIN
Berlin
Dusseldorf
Hamburg
Hannover-Langenhagen
Mannheim
Munchen
Nurnberg
Stuttgart

GREAT BRITAIN*
LONDON: Bracknell
Belfast
Birmingham
Brentford
Cardiff
Cheadle Hulme
Dublin (Rep. Ireland)
Glasgow (Scotland)
Leeds
Middlesbrough
Motherwell
Sheffield

HONG KONG

INDIA
BOMBAY

IRAN
Teheran

ITALY
MILAN
Bologna
Genova
Padova
Roma
Torino

JAPAN*
TOKYO
Chiba
Fukuoka
Fukuyama
Himeji
Hiroshima
Kashima
Kitakyushu
Kokura
Nagasaki
Nagoya
Nihama
Ft. Washington, Pa. (USA)
Los Angeles, Calif. (USA)
Oita
Okayama
Osaka
Sapporo
Tokuyama
Tomakomai
Toyama
Yokkaichi

KUWAIT

LEBANON
BEIRUT

MEXICO*
MEXICO CITY D.F.
Guadalajara
Monterrey

NETHERLANDS*
AMSTERDAM
Hengelo
Rotterdam
Eindhoven

NEW ZEALAND
AUCKLAND
Christchurch
Dunedin
Wellington

SOUTH AFRICA
JOHANNESBURG
Capetown
Durban

SPAIN*
MADRID
Barcelona
Algorta (Bilbao)
Gijon

SWEDEN
SKARHOLMEN
Goteborg
Karlstad
Lulea
Malmo
Norrkoping
Sundsvall
Umea

SWITZERLAND
ZURICH
Basel
Bern
Geneva
Wallisellen

TAIWAN
TAIPEI

VENEZUELA
CARACAS
Maracaibo
Valencia

DISTRIBUTORS

ALGERIA
BOLIVIA
CHILE
COLOMBIA
EGYPT
EL SALVADOR
FIJI
GREECE
GUAM
HONG KONG
ICELAND
INDIA
INDONESIA
KOREA
MALAYSIA
MOROCCO
NETHERLANDS ANT.
NORWAY
PAKISTAN
PANAMA
PERU
PHILIPPINE ISLANDS
PORTUGAL
SINGAPORE
THAILAND
TUNISIA
TRINIDAD B.W.I.
TURKEY
VIETNAM
YUGOSLAVIA

†First city listed is head office location
*Includes manufacturing facilities

HONEYWELL•Minneapolis, Minnesota 55408•Scarborough, Ontario•Subsidiaries and Affiliates Around the World.•Printed in U.S.A.

Table 2. Valve Bodies, Tailpieces, Nuts, and Seats.

O.S. No. VP525A	Tailpiece	Nut	Seat
1002*	None	None	None
1010*			
1028*			
1036*			
1044*			
1051*	None	None	None
1069	308060	313052	308062
1077	313045	313051	308062
1085	313045	313051	308062
1093	308060	313052	Integral
1101	313045	313051	
1119			
1127			
1135	313045	313051	Integral
1143	308109	313053	309807
1150	313046	313052	309807
1168	313046	313052	309807
1176	313045	313051	Integral
1184	308109	313053	310648
1192	313046	313052	
1200			
1218			
1226	313046	313052	310648
1390	313045	313051	310648
1408			310648
1416	313045	313051	308062

*Solder Bodies.

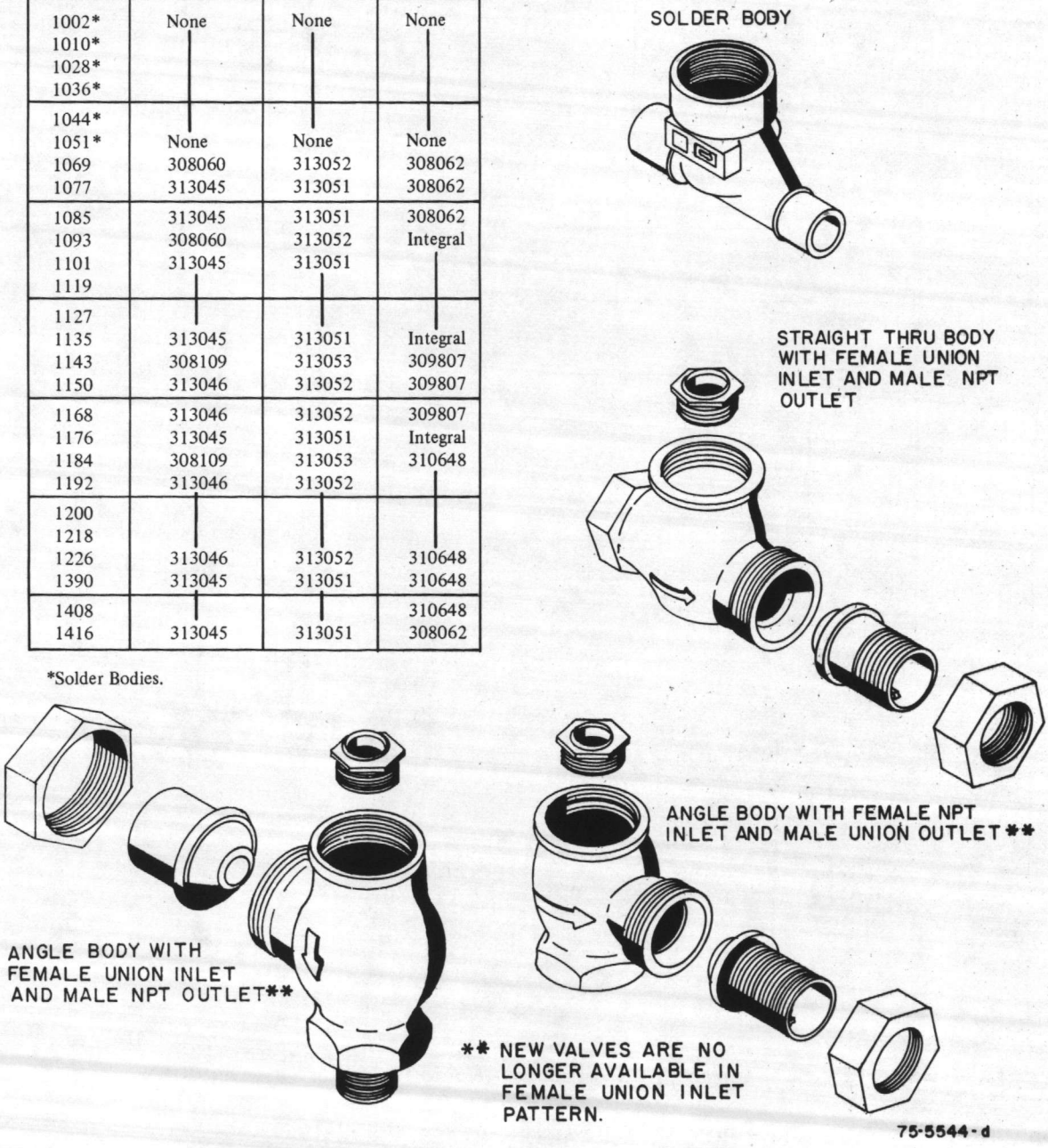

Fig. 3. Valve Bodies, Tailpieces, Nuts, and Seats.

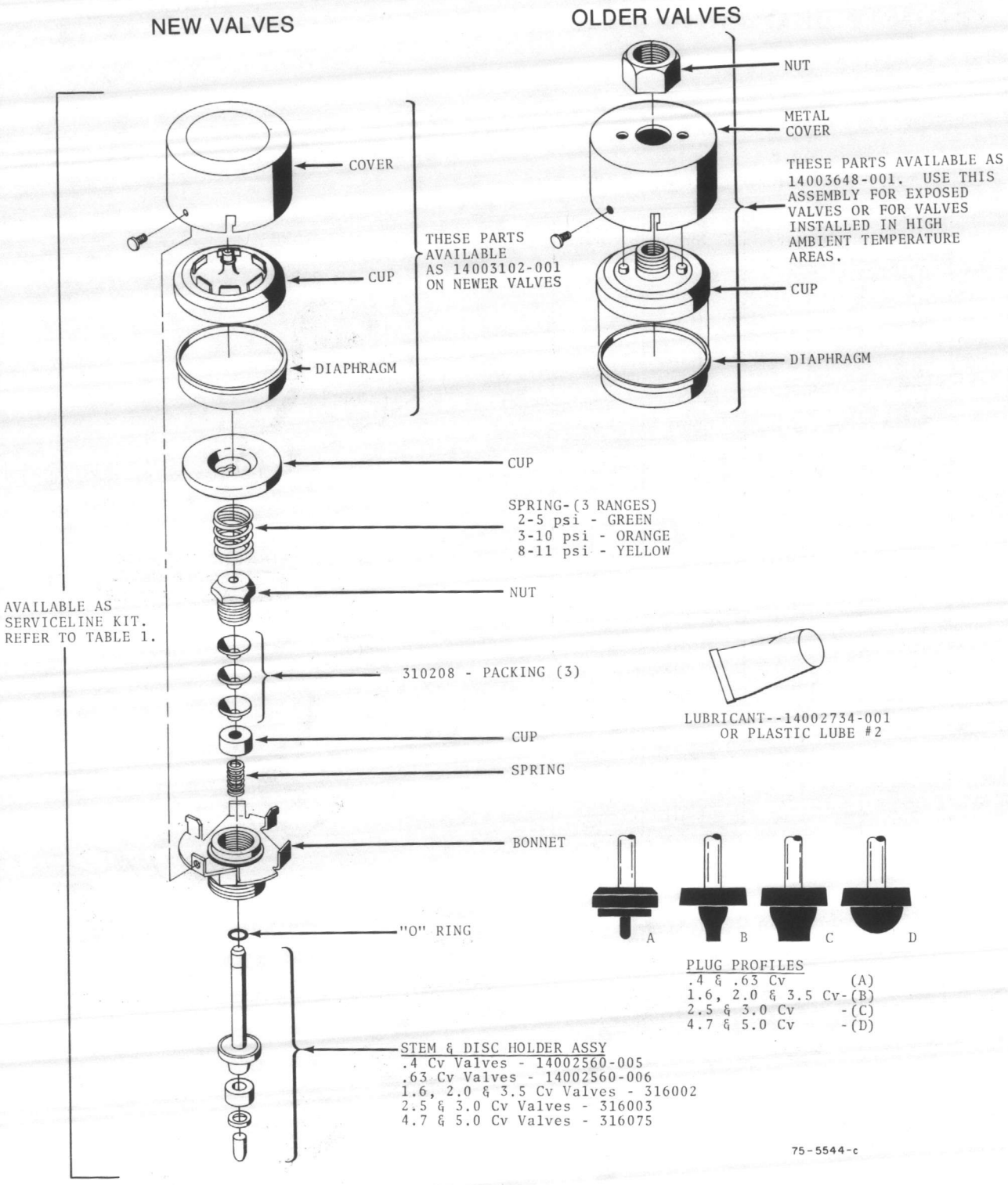

Fig. 4. Exploded View of Top and Insert Assemblies (refer to Table 1 for Serviceline Kit Numbers).

ORDERING INFORMATION FOR HONEYWELL PARTS AND ASSEMBLIES

Contact your local Honeywell branch office for handling of repairs, pricing information and assistance. When ordering repair parts, please furnish the Part Number and Description of parts required. Also, provide the complete Order Specification Number of the device in which the parts are to be used.

Time and trouble can be saved by arranging with Honeywell for a maintenance agreement which will guarantee expert, economical care, and insure maximum life and efficiency from your system.

Honeywell

Comfort Control Systems

VP531A PNEUMATIC TERMINAL UNIT VALVE

Service Data

GENERAL

DESCRIPTION

The VP531A is a single-seated, normally open valve with a straight through body pattern and an integral pneumatic operator.

Available models have either threaded NPT or soldered piping connections.

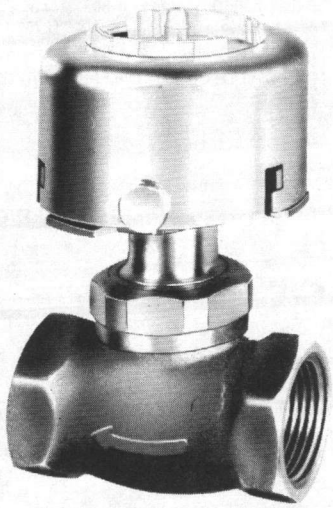

RI656

APPLICATION

The VP531A, used with a direct acting room or unit thermostat, provides proportional control of steam or hot water in terminal units, small reheat coils, fan control units, or fin tube radiation. This valve may also be used on chilled water coils if controlled by a reverse acting thermostat. The model with 2 to 5 lb/in^2 (14 to 34 kPa) operating range is used if the valve operation is being sequenced with another control function, such as a VAV terminal unit or cooling valve.

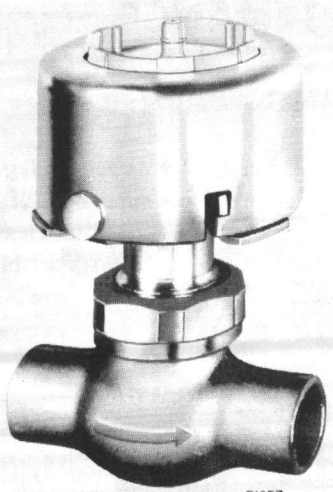

RI657

SPECIFICATIONS

BODY SIZE: 1/2- or 3/4-inch NPT, or 5/8- or 7/8 inch O.D. solder.

BODY PRESSURE RATING: 150 lb/in^2 (1724 kPa) maximum.

CONTROLLED MEDIUM TEMPERATURE: 240 F (116 C) maximum. 120 F (49 C) maximum difference for alternating hot and cold water.

CLOSE-OFF RATING: See Figure 1.

Rev. 8-81 10-81

Form No. 75-7251
Commercial Bldg. Group
MLF TAB: II. D. 4.

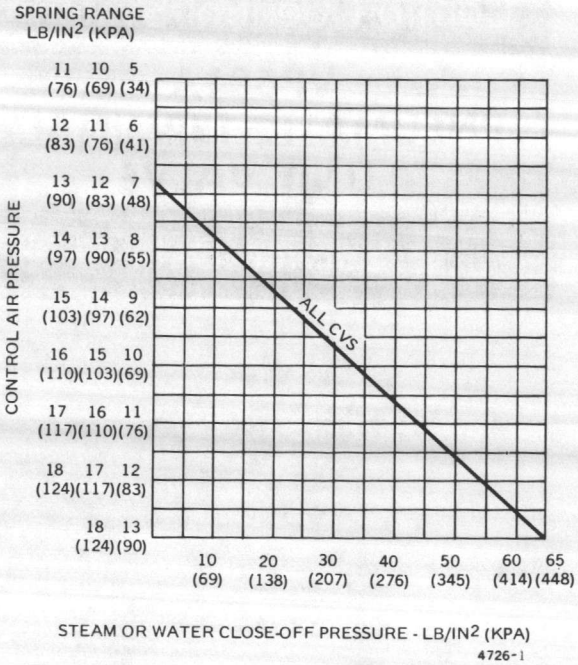

Fig. 1. Close-Off Pressure Ratings for VP531A.

MAXIMUM SAFE AIR PRESSURE: 30 lb/in^2 (207 kPa).

OPERATING RANGES:

2 to 5 lb/in^2 (14 to 34 kPa).
3 to 10 lb/in^2 (21 to 69 kPa).
8 to 11 lb/in^2 (55 to 76 kPa).

OPERATION

An increase in control air pressure to the VP531A causes the valve stem to move downward, toward the closed position, modulating the flow through the valve (Fig. 2). The valve is fully open when the control air pressure is at or under the low end of the operating range, and is fully closed when control air pressure is at the high end.

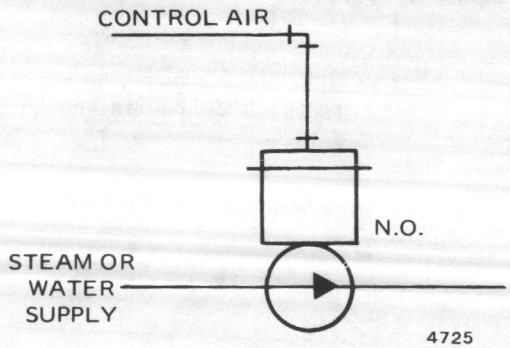

Fig. 2. VP531A Typical Operation.

MAINTENANCE

CLEANING

Remove all dirt and grease accumulation from around the valve assembly. Recommended cleaning solvent is Chlorothene or Vythene typewriter cleaners (containing trichloroethane, inhibited 1-1-1), available at most office supply stores.

CAUTION

Exercise special care when using solvents. Avoid prolonged inhalation and/or contact with skin. Careless handling can result in permanent damage to the respiratory system or skin tissue.

OPERATIONAL CHECK

Check valve for signs of leakage around the stem, bonnet, or piping connections. Determine proper operation by the following.

Heating Application: Adjust the thermostat above the present space temperature. The discharge temperature should rise accordingly. When the thermostat is set below the room temperature, the coil temperature should gradually drop to space temperature.

Cooling Application: Adjust the thermostat below the present space temperature. The room temperature should drop accordingly. Adjusting the thermostat higher than space temperature should cause the coil temperature to gradually rise to space temperature.

TROUBLESHOOTING

EQUIPMENT REQUIRED

1. Gage, 0 to 30 lb/in^2 (0 to 207 kPa), Part No. 305909.
2. Pressure Bulb, Memphis Service Center Part No. 852.
3. Plastic Tubing, 5/32-inch, Memphis Service Center Part No. 853.
4. "T" Fitting, Memphis Service Center Part No. 1614B.

TROUBLESHOOTING PROCEDURES

STICKING STEM OR LEAKAGE AROUND STEM

If there is evidence of a sticking stem or any signs of leakage around the stem observed during the valve operation, the valve should be disassembled, cleaned, and repacked.

NO WATER FLOW THROUGH VALVE

1. Check thermostat for proper functioning. Measure with a pressure gage for changes in branch line pressure as the thermostat is adjusted. If the pressure does not change in relation to the adjustment made, refer to applicable Service Data sheet for the specific thermostat.

2. Water Systems:
   Are system circulating pumps running?
   Piping air locked?
   Bleed as required.

   Steam Systems:
   Is steam trap functioning correctly?
   Is steam supply pressure adequate?

UNCONTROLLED WATER FLOW THROUGH VALVE

1. Is branch pressure changing as the thermostat setpoint is adjusted? If not, disconnect tubing at top of actuator and check for a leaking diaphragm by attaching a gage and pressure bulb to the actuator. Attempt to pump up the actuator to 13 lb/in^2 (90 kPa). If pressure cannot be maintained, a leaking diaphragm is indicated and complete top assembly must be replaced.

2. If the actuator is able to maintain the 13 lb/in^2 (90 kPa) pressure, but pressure drops when tubing is reconnected, suspect an air leak at the fittings in the piping or at the thermostat.

3. If everything appears normal at the valve location, but the valve stem remains open, check water supply and return pressures to determine if the differences exceed the close-off rating of the valve. In the case of steam, the supply pressure cannot exceed the close-off rating.

4. If the supply and return pressures are within the limits but a constant flow persists, suspect a defective valve seat or plug, or the possibility of a foreign object in the valve, preventing the plug from seating. The valve must then be disassembled. If the valve seat is found defective, the complete valve assembly must be replaced.

REPAIR

EQUIPMENT REQUIRED

1. Gage, 0 to 30 lb/in^2 (0 to 207 kPa), Part No. 305909.
2. Pressure Bulb, Memphis Service Center Part No. 852.
3. Plastic Tubing, 5/32-inch, Memphis Service Center Part No. 853.
4. "T" Fitting, Memphis Service Center Part No. 1614B.
5. Wrench, 1-1/4-inch, Memphis Service Center Part No. 638.

PACKING REPLACEMENT

1. Remove system air and water pressure. Disconnect tubing from barb connector on top of actuator.

2. Unscrew valve bonnet nut from valve body using a flat open-end wrench and remove the entire top and insert assembly. After removing the retainer from the side of the cover, twist top counterclockwise and lift off.

3. Remove cup and main spring by sliding cup to disengage stem from captive slot.

4. Unscrew bonnet nut from bonnet. Remove stem and disc holder assembly. Use stem to push out the packing spring, old packing, and spacers upwards from the bonnet.

5. Inspect stem for scoring or bent condition. Check plug and disc holder, and valve seat (Fig. 3). Replace stem and disc holder assembly if damaged. If the seat is defective, the complete valve must be replaced.

6. Thoroughly clean packing bonnet and valve stem with recommended cleaning solvent (see CLEANING paragraph in MAINTENANCE section).

7. Reassemble all parts using fresh lubricant and new packing (see PARTS LIST in PARTS AND ACCESSORIES section). The spring and spacers are furnished in the packing replacement kit.

8. Restore air and water pressure to system and make operational check.

TOP ASSEMBLY REPLACEMENT

1. Remove air pressure to actuator and disconnect tubing.

2. Remove cover and rotate top assembly counterclockwise to disengage it from the base. Lift off.

3. Install replacement unit.

4. Reconnect tubing to actuator and restore system air supply.

DIAPHRAGM REPLACEMENT

A defective diaphragm is repaired by replacing the complete top assembly (see TOP ASSEMBLY REPLACEMENT paragraph).

STEM AND DISC HOLDER REPLACEMENT

Use the same procedure as in PACKING REPLACEMENT paragraph.

PARTS AND ACCESSORIES

PARTS LIST

Available parts and repair assemblies for the VP531A are listed on Figure 3. Valve bodies are not available separately.

ACCESSORIES

Accessories for the VP531A valve are shown in Figures 4 and 5.

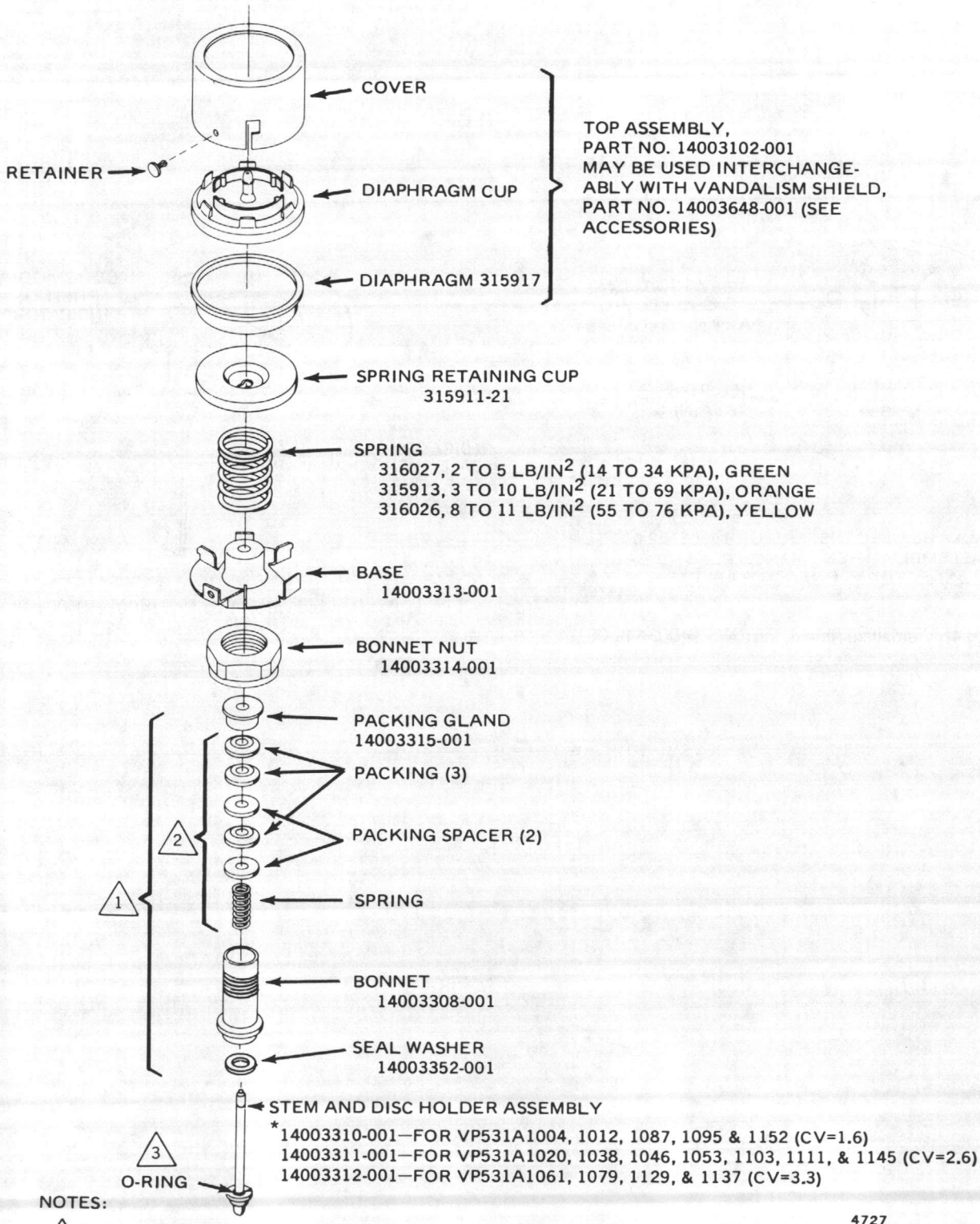

NOTES:

1. REPLACEMENT BONNET AND PACKING ASSEMBLY, PART NO. 14003373-001.
2. SERVICELINE REPACK KIT, PART NO. 14003297-001 (INCLUDES LUBRICANT).
3. 0-RING NO LONGER NEEDED AS IT IS NOW MOLDED INTO PLUG.

Fig. 3. VP531A Top and Insert Assembly Exploded View.

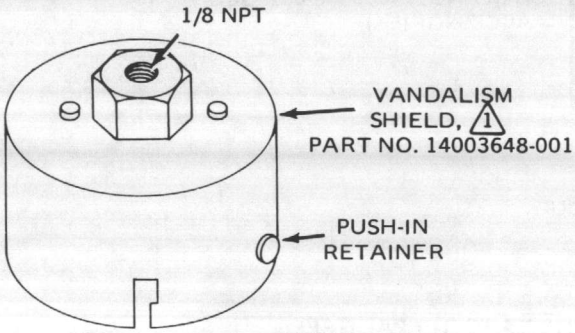

1 MAY BE USED INSTEAD OF 14003102-001 TOP ASSEMBLY WHEN 1/4 INCH PLASTIC BARB CONNECTOR IS UNACCEPTABLE.

15880

Fig. 4. Vandalism Shield, Part No. 14003648-001.

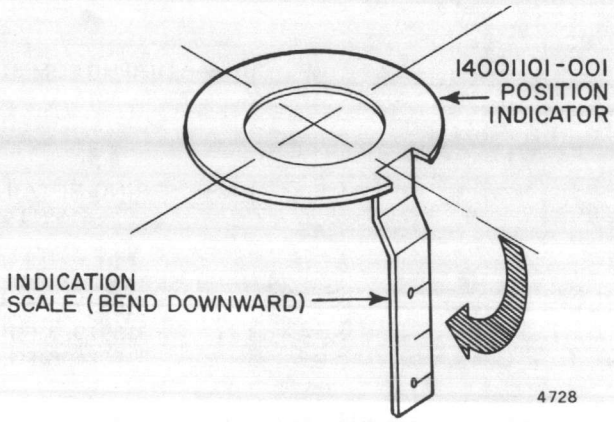

Fig. 5. Position Indicator, Part No. 14001101-001.

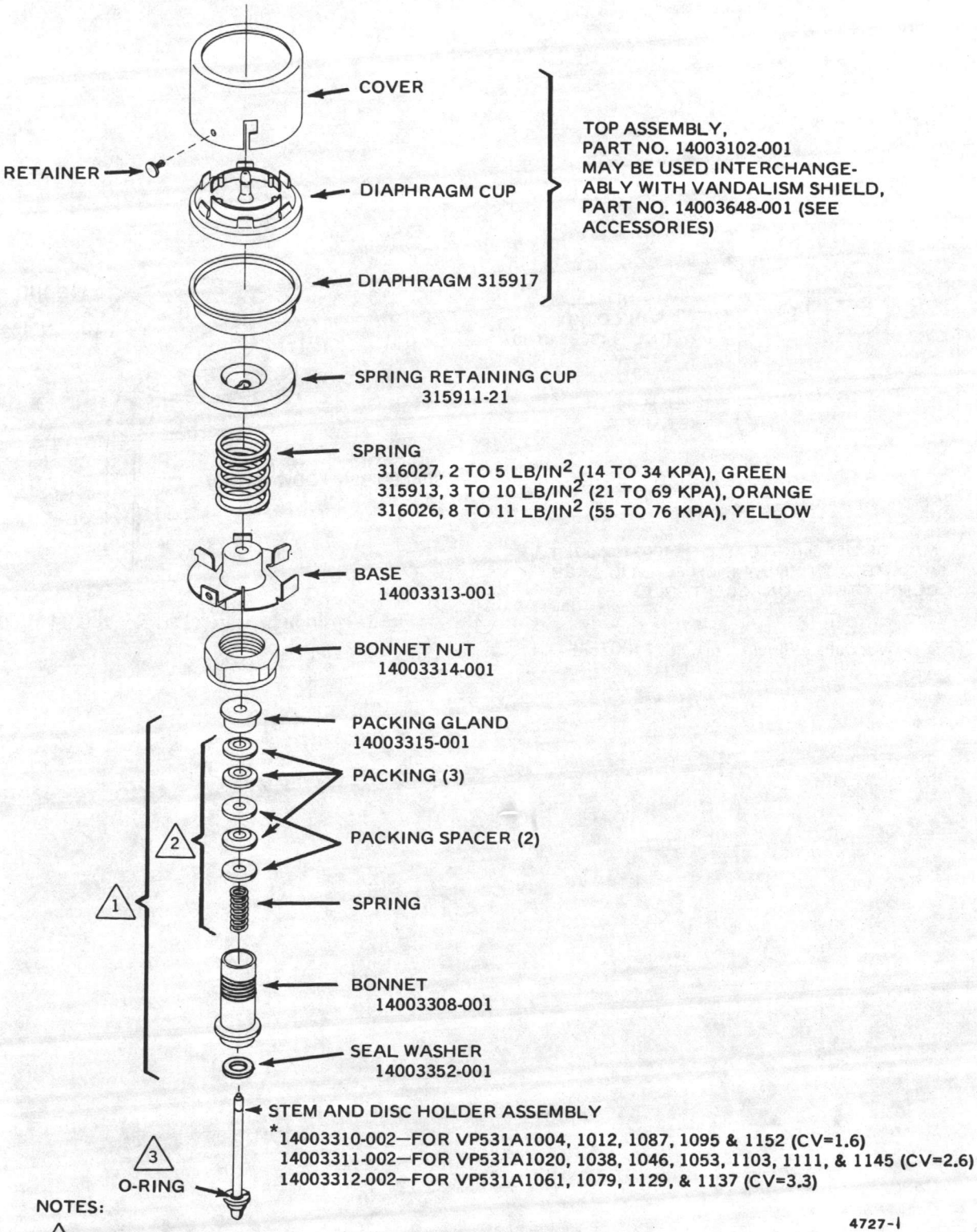

NOTES:

1. REPLACEMENT BONNET AND PACKING ASSEMBLY, PART NO. 14003373-001.
2. SERVICELINE REPACK KIT, PART NO. 14003297-001 (INCLUDES LUBRICANT).
3. O-RING NO LONGER NEEDED AS IT IS NOW MOLDED INTO PLUG.

Fig. 3. VP531A Top and Insert Assembly Exploded View.

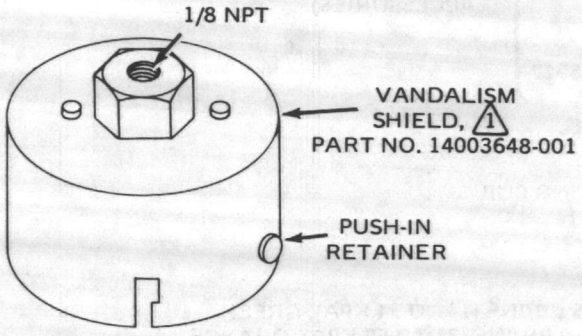

1 MAY BE USED INSTEAD OF 14003102-001 TOP ASSEMBLY WHEN 1/4 INCH PLASTIC BARB CONNECTOR IS UNACCEPTABLE.

15880

Fig. 4. Vandalism Shield, Part No. 14003648-001.

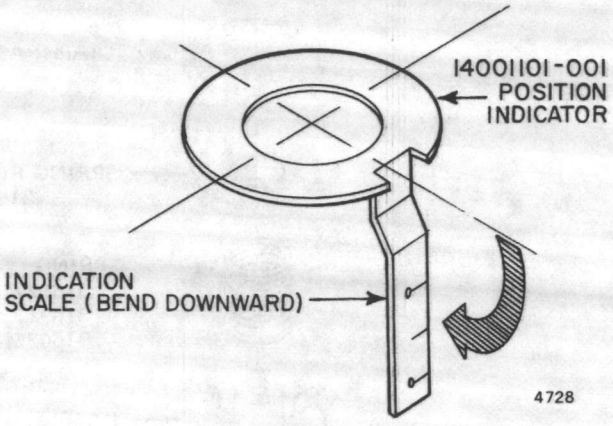

Fig. 5. Position Indicator, Part No. 14001101-001.

Honeywell

Comfort Control Systems

AK3470B&C CONDENSATE TRAPS AND AK3485D,E&F COMPRESSOR TANK DRAIN KITS

Installation Instructions

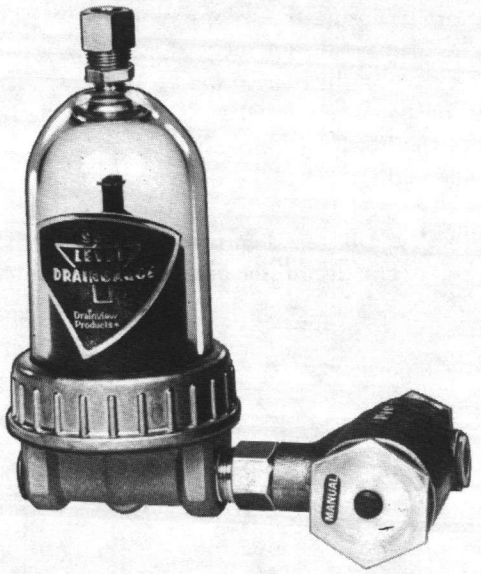

BEFORE INSTALLING, NOTE

The AK3470B and C Condensate Traps provide automatic compressor tank drainage. The AK3485D, E and F Compressor Tank Drain Kits contain the trap and all the necessary fittings for mounting on most Honeywell compressors (see Table 1).

If the installation requires both a dryer drain and a tank drain, use two separate traps.

Table 1. Condensate Traps and Kit Applications.

Drain Only	Drain and Fittings Kit	Tank Size in Gallons (Liters)			O.S. Suffix	Horse-Power
			Oil Lubricated			
		Oil-Less WP260	Single WP231	Dual WP241		
AK3470C	AK3485E	12 (45)			T	1/6
		20 (76)			A	1/4
			20 (76)	30 (114)	Y	1/3
		20 (76)	20 (76)	80 (303)	B	1/2
		30 (114)	30 (114)	80 (303)	C	3/4
AK3470B	AK3485D	30 (114)	30 (114)	80 (303)	D	1
		60 (227)	60 (227)	80 (303)	E	1-1/2
		------	60 (227)	80 (303)	F	2
		------	60 (227)	80 (303)	G	3
		------	80 (303)	------	H	5
	AK3485F	------	------	120 (454)	H	5
		------	120 (454)	200 (757)	J	7-1/2
		------	120 (454)	------	K	10
		------	120 (454)	------	L	15
		------	120 (454)	------	M	20

See Figures 1 through 3 for installation diagrams. Install the trap so the bowl is upright and the manual drain button is accessible.

If it is necessary to raise the compressor to allow for sufficient clearance, use cork and rubber blocks (CCM-3005) as shim material.

Make equalizing connections to the top of the trap as illustrated. NEVER connect to bottom of the filter bowl as the filter resistance may cause the air to bypass the filter.

NOTE: Always install the trap below the tank and on a horizontal plane.

INSTALLATION

After unpacking the trap, physically examine it for shipping damage. Invert the trap assembly several times to observe that the float moves up and down freely. If it binds or hangs up on the sides of the plastic bowl, remove the bowl and carefully straighten the float stem as required or replace.

NOTE: Use caution when replacing the bowl so as not to crossthread the bowl into its metal base.

Remove the two protective plastic pipe plugs from the unit.

NOTE: Do not twist the drain body by hand. Use a wrench on the hex adapter only. Turn the body only in the clockwise direction so as not to loosen the connector and cause an air leak. When making connections to the bowl, hold the compression fitting with a wrench to prevent damage to the threads in the top of the bowl.

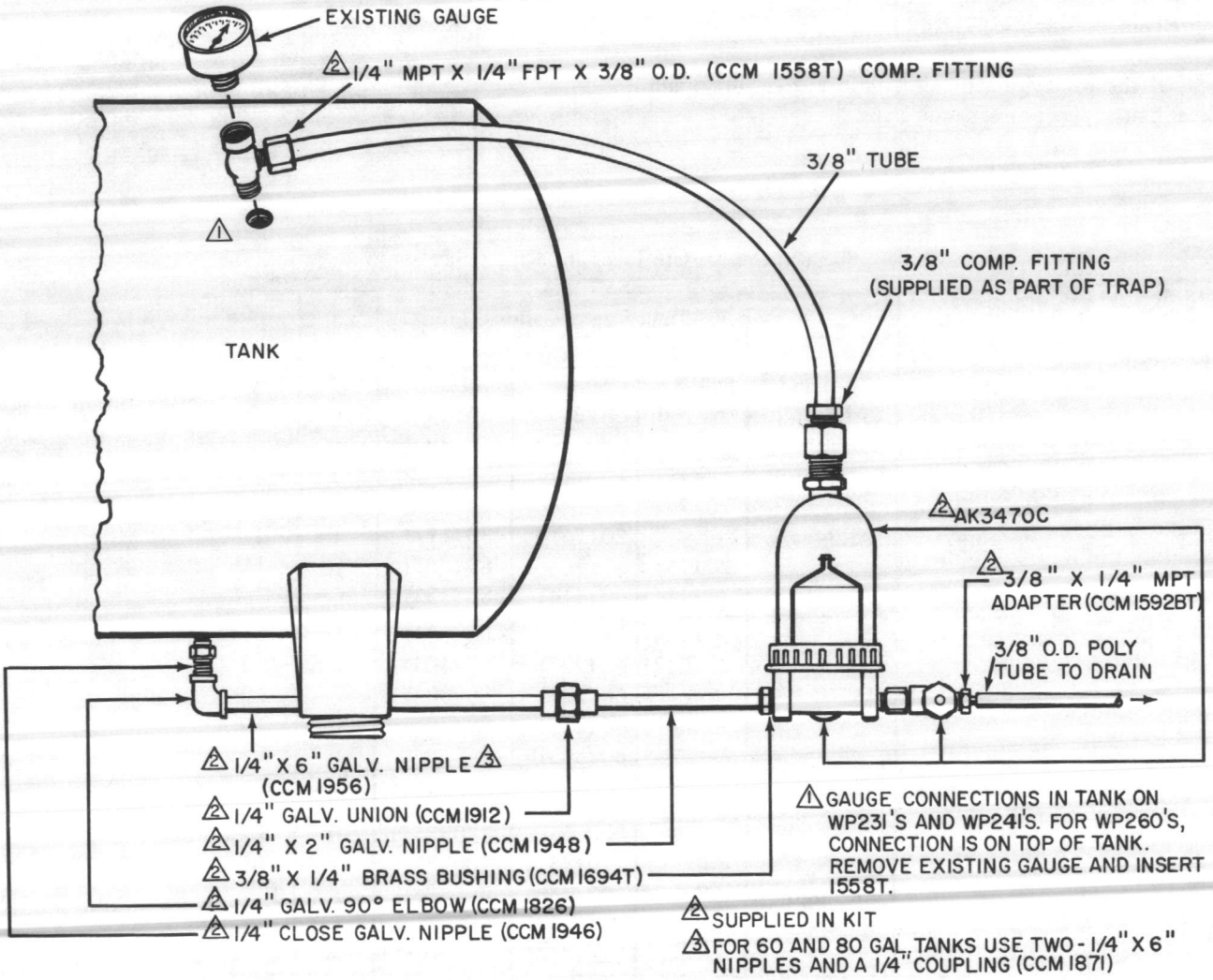

Fig. 1. AK3485E–for Compressors of 3/4 HP or Less.

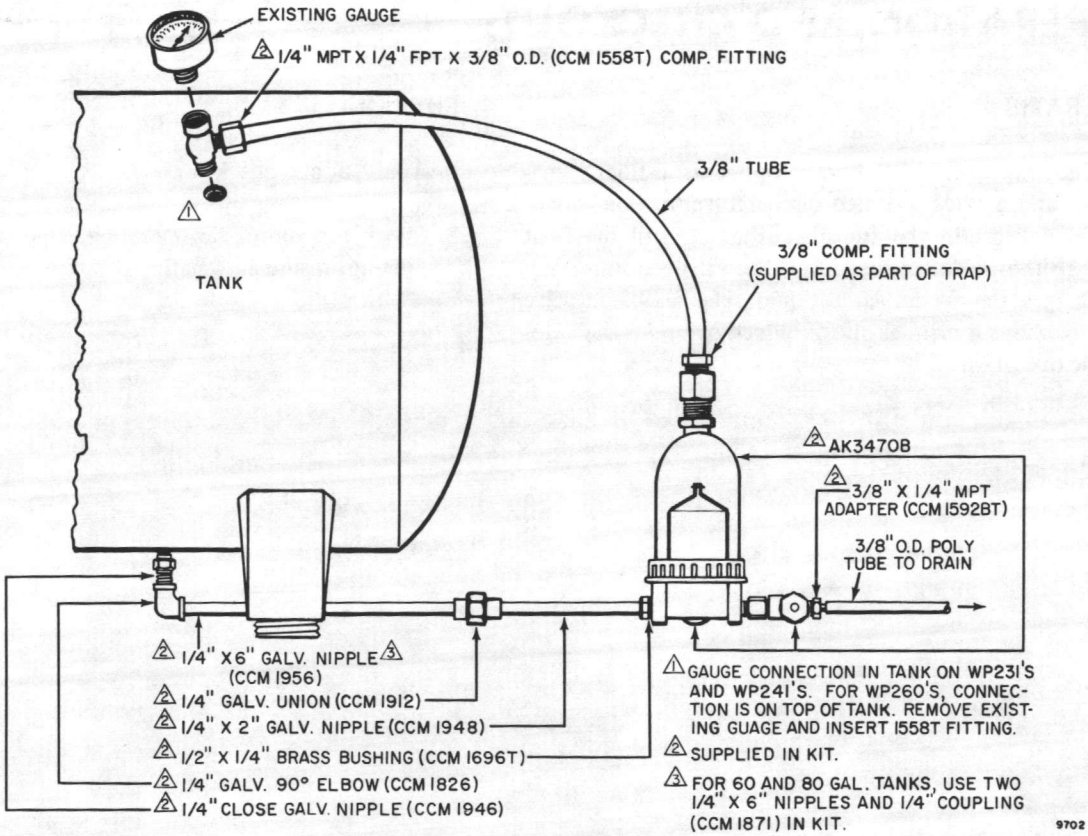

Fig. 2. AK3485D–for Compressors of 1 HP or More with Tanks No Larger Than 80 Gallons (303 Liters).

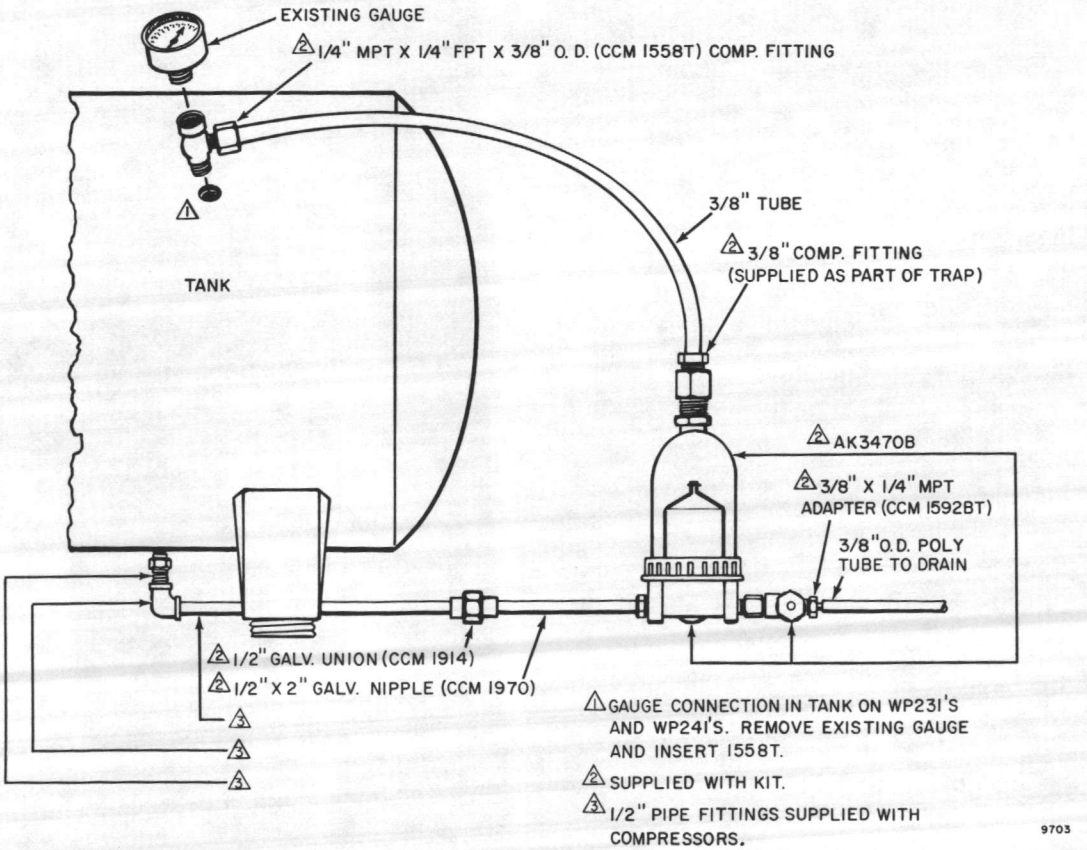

Fig. 3. AK3485F–for Compressors of 1 HP or More with Tank Sizes of 120 or 200 Gallons (454 or 757 Liters).

OPERATION AND CHECKOUT

OPERATION

The trap consists of two components; a float mechanism and a pilot operated discharge valve. Condensate liquid collects in the transparent bowl until the float rises to the predetermined level. The valve automatically discharges the accumulated liquid. The discharge valve also contains a manual button which overrides the automatic operation.

CHECKOUT

1. Apply air and check for leaks.

2. Check for automatic operation. Operating manually does not insure automatic operation.

HONEYWELL•Minneapolis, Minnesota 55408•Scarborough, Ontario•Subsidiaries and Affiliates Around the World.•Printed in U.S.A.

Honeywell

Comfort Control Systems

TP970-TP974 AND HP970 SERIES FITTINGS

Installation Instructions

BEFORE INSTALLATION, NOTE

The following information covers installation of fittings for the TP970 series pneumatic thermostats (stats) and the HP970 series pneumatic humidistats (stats).

See Table 1 for various types of wall construction covered in this literature.

To complete the installation and checkout see TP970-TP974 Pneumatic Thermostats Installation Instructions 95-5597 and HP970, HP971, and HP972 Pneumatic Humidistats Installation Instructions 95-7195.

Table 1. Wall Construction and Fittings Reference List.

Wall Type	Figure Ref.
Block Walls—Deep Wall Box	11
Block Walls—To be plastered	13
Concrete or Block Walls—Surface Tubing	14
Concrete Pour	17
Finished Block	12
Glazed Tile	12
Sheet Rock Walls—Laminated	18
Stud Walls—Sheet Rock, Plaster or Paneling	15
Stud Walls—Wire Lath and Plaster	16

ASSEMBLIES AND FITTINGS

CONNECTOR ASSEMBLIES

Connector Assembly 14004559-001 consists of fifty 5-in. (127-mm) pieces of 5/32 in. (4 mm) polyethylene tubing. Each tube has a strain relief spring and a 1/4-5/32 in. barbed coupling. Twenty-five tubes are labeled BRANCH and 25 are labeled MAIN.

TUBING ASSEMBLIES

Table 2. Tubing Assembly 8 Ft (2.5 m). See Figure 1.

Fitting for System	5/32 in. Plastic Tubing Assembly Part No.	Copper Tubing Assy. Part No.
1-Pipe	14001491-001	14001494-001
2-Pipe	14001491-002	14001494-002
3-Pipe	14001491-003	14001494-003

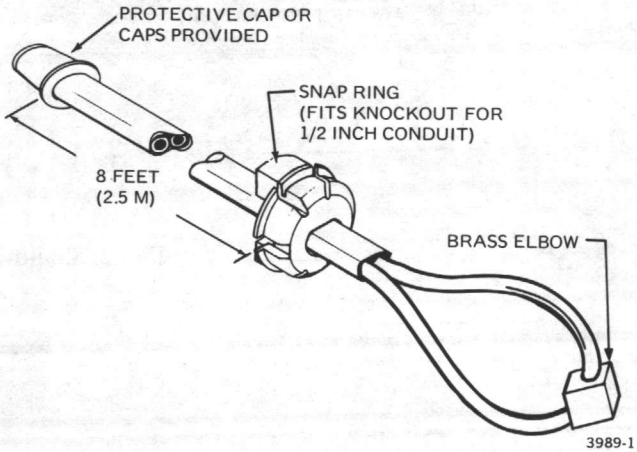

Fig. 1. Tubing Assembly 8-Ft (2.5 m) 14001491-002.

SHALLOW WALL BOXES

Table 3. Shallow Wall Box Assemblies. See Figure 2.

Fitting for System	5/32 in. Plastic Tubing Assembly Part No.	Copper Tubing Assy. Part No.
1-Pipe	14001616-001	14001615-001
2-Pipe	14001616-002	14001615-002
3-Pipe	Not Available	Not Available

Shallow wall box assemblies include: shallow wall box, protective cap, tubing and airhead assembly, plaster ring, protector assembly, and fitting finder.

Rev. 11-85

Copyright © 1985 Honeywell Inc.

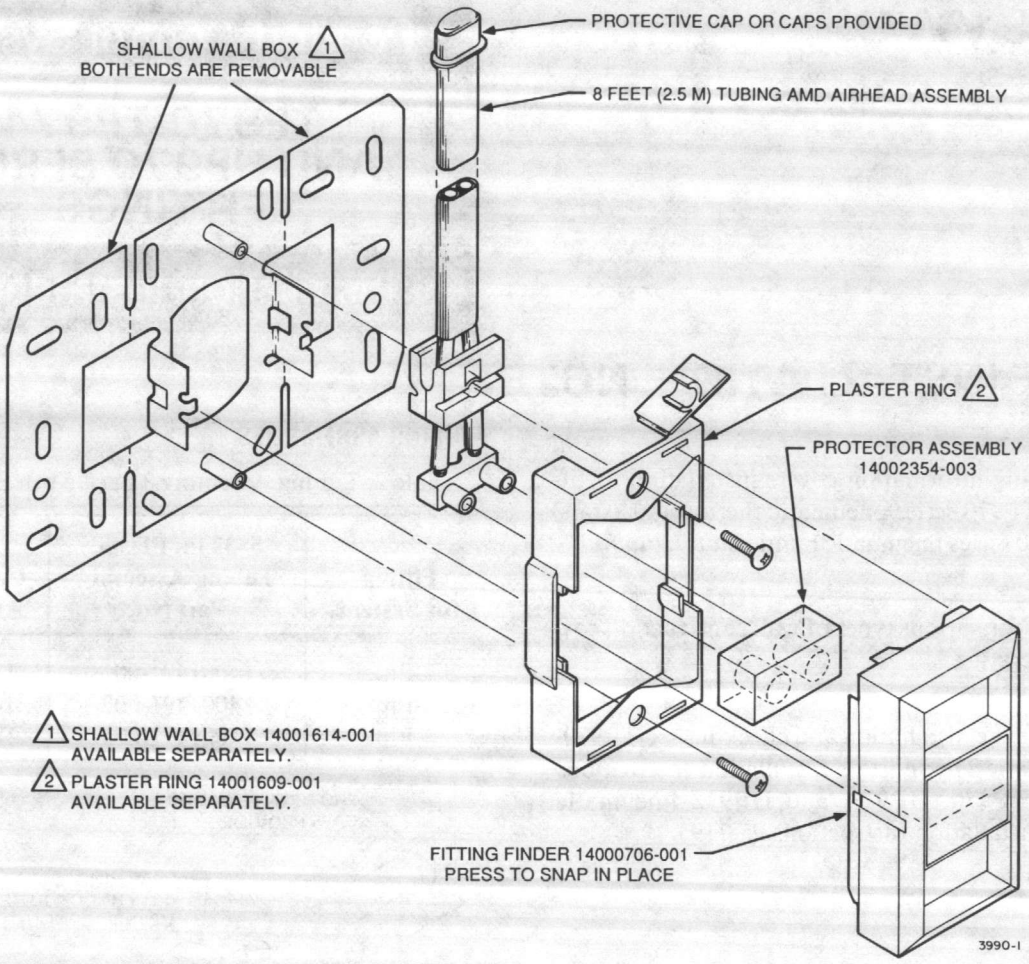

Fig. 2. Shallow Wall Box Fittings.

DEEP WALL BOXES

See Figures 3 through 7 for deep wall box installation.

Table 4. Deep Wall Box Assembly. See Figure 3.

Fitting for System	Plastic 5/32 in. Tubing Assembly Part No.
1-Pipe	Not Available
2-Pipe	14001492-001
3-Pipe	Not Available

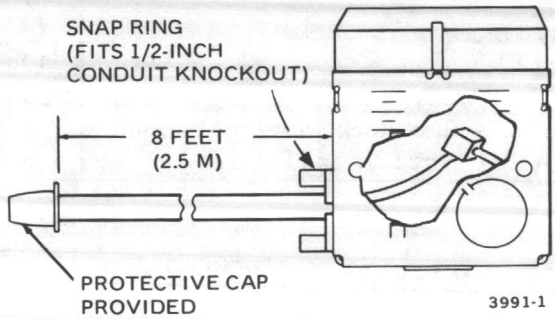

Fig. 3. Deep Wall Box Assembly 14001492-001.

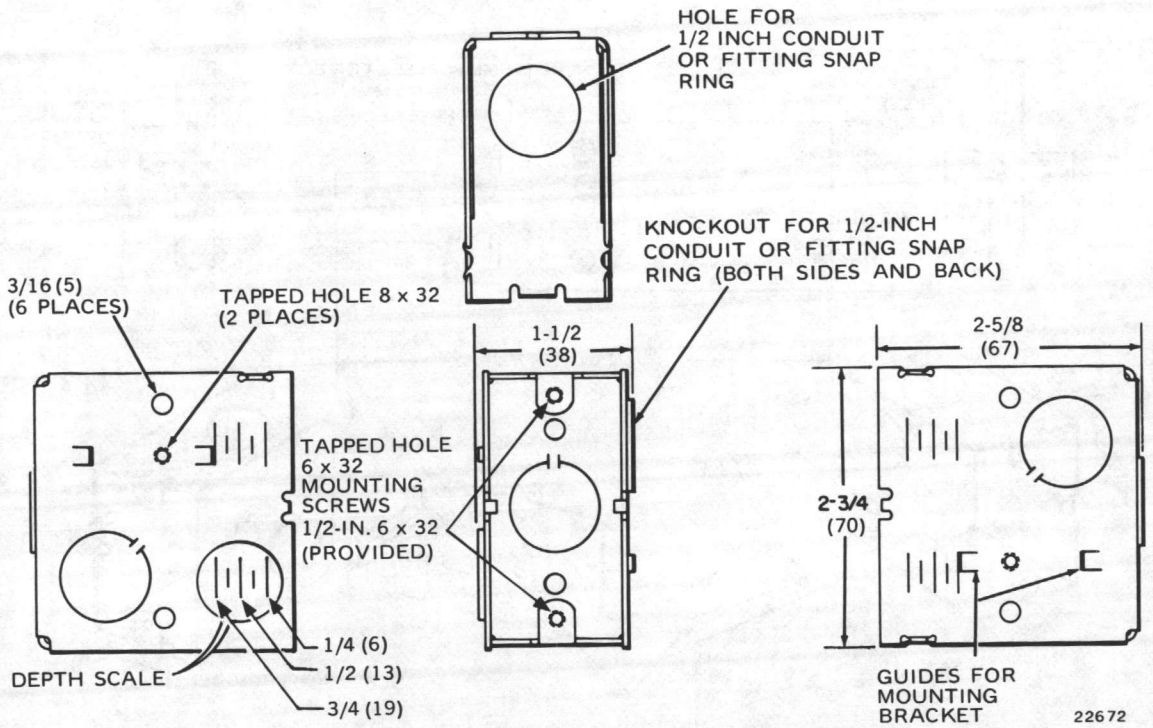

Fig. 4. Deep Wall Box 14001355-001 Dimensions in Inches (Millimeter).

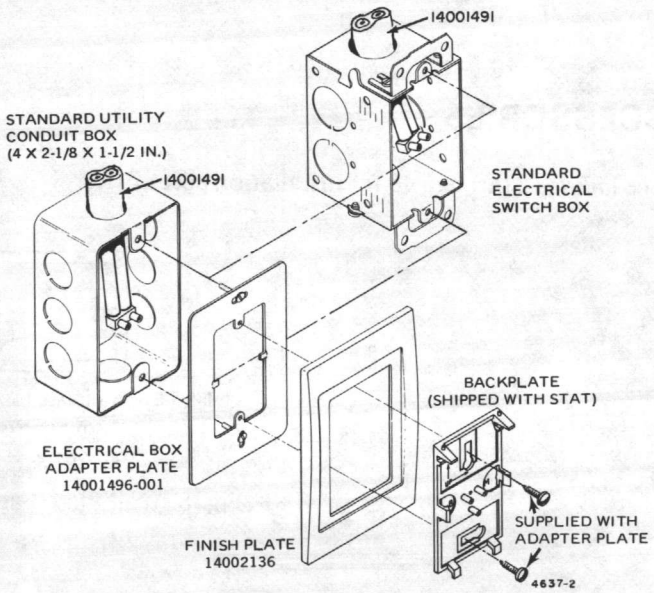

Fig. 6. Adapter, Finish Plate, and Thermostat Backplate with Standard Utility Conduit Box or Electrical Switch Box.

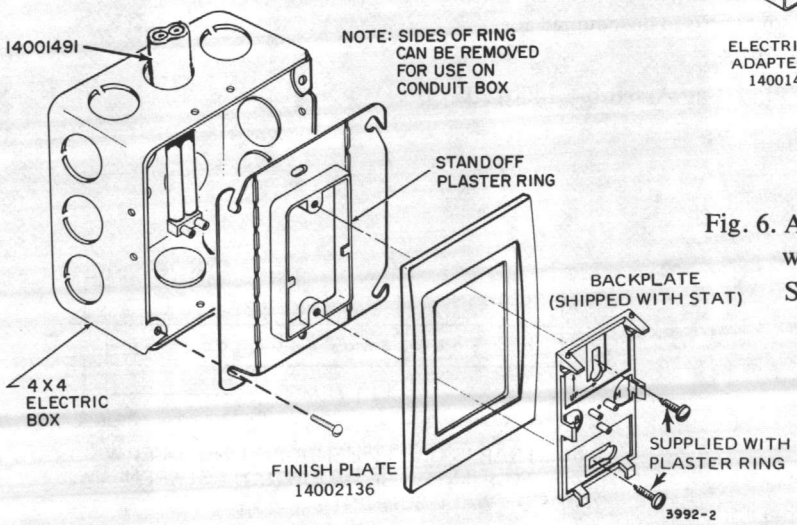

Fig. 5. Standoff Plaster Ring 14000885-001.

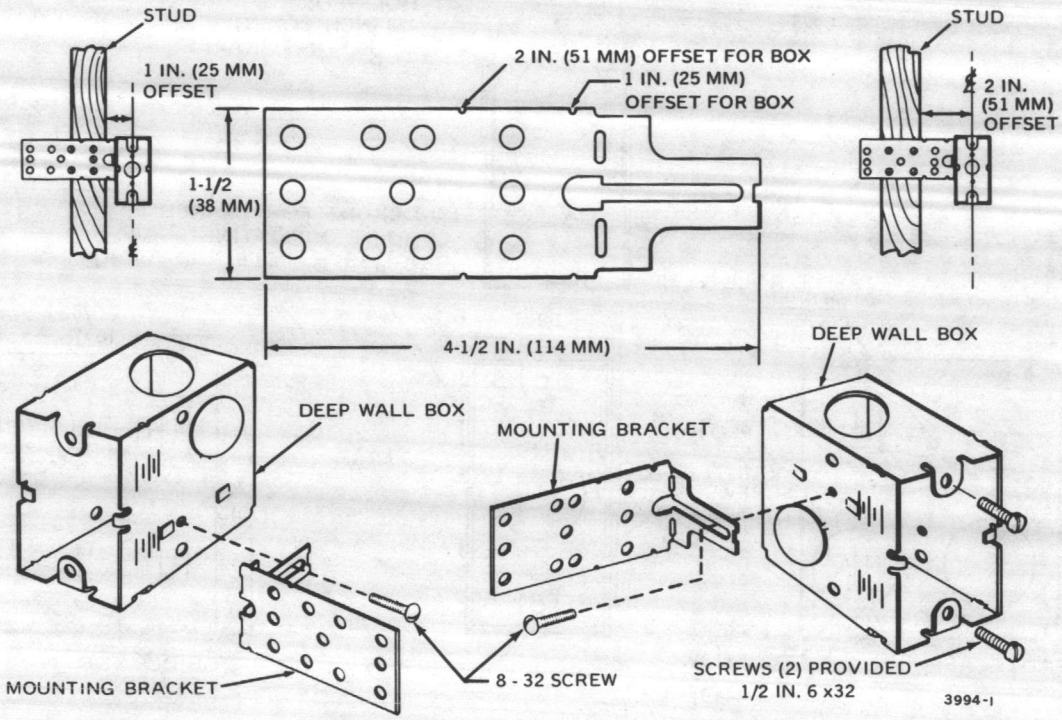

Fig. 7. Deep Wall Box Mounting Bracket 14001354-001.

ACCESSORIES

See Figures 8 through 10 for installation accessories.

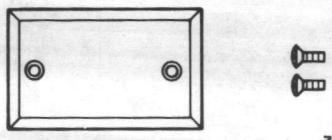

NOTE: Wallplate for new construction when thermostat is to be mounted at a later date.

Fig. 8. Wall Plate Bag Assembly 14001905-001.

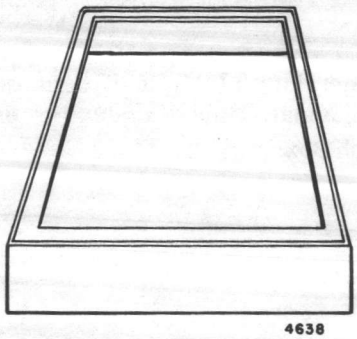

Fig. 9. Mounting Ring 14001608-001 (Flush Mount) and 14001608-002 (Surface Mount).

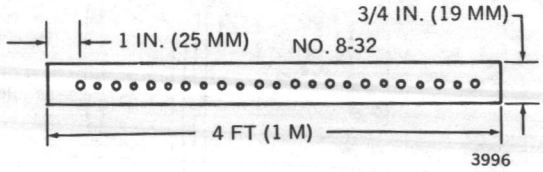

THIS STRAP IS USED WHEN A FITTING (DEEP WALL BOX, ETC) MUST BE MOUNTED BETWEEN TWO STUDS OR WALL SUPPORTS.

Fig. 10. Universal Strap CCT2630.

INSTALLATION

FITTING INSTALLATION IN WALLS

ASSEMBLING SHALLOW WALL BOX WHEN PLASTER RING IS USED

Assembly Procedures:

1. Install tubing and fitting finder assembly (Fig. 2).
2. For tubing run on the surface, remove tab from plaster ring.
3. Install plaster ring.
4. Snap fitting finder into place on shallow fitting.

ASSEMBLING SHALLOW WALL BOX WHEN PLASTER RING IS NOT USED

Assembly Procedures:

1. Install tubing and fitting finder assembly (Fig. 2).
   NOTE: If a plaster ring is required when the shallow wall box has both ears removed, the shallow wall box must be secured to mounting surface before the tubing, fitting finder assembly, and plaster ring are attached. Notch the plaster ring at the corners to provide clearance for the screws used when mounting the shallow wall box. The plaster ring was designed to go on once and fit tight, it is difficult to remove without damage. Make sure the plaster ring is notched before installation.
2. Snap fitting finder into place.

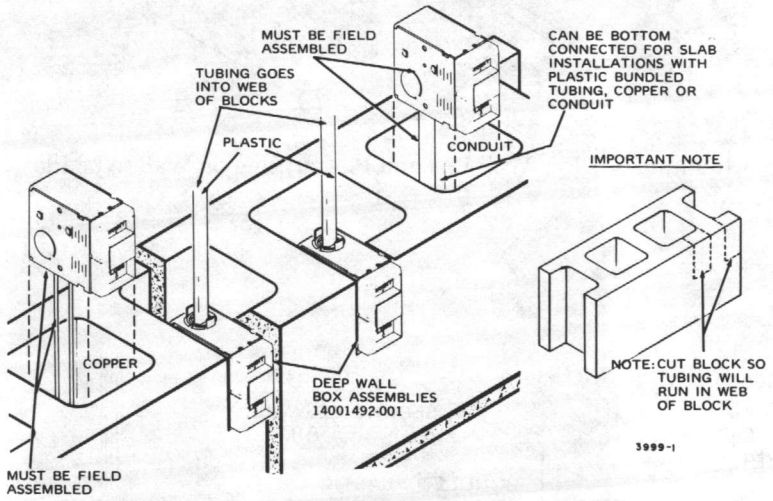

Fig. 11. Installing Deep Wall Box in Block Wall.

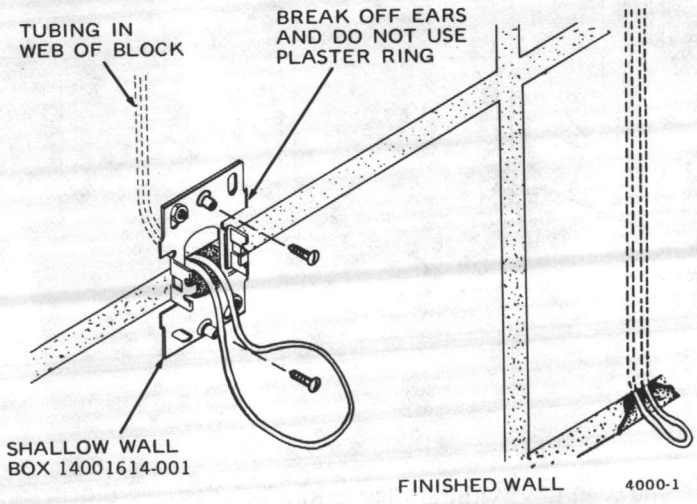

Fig. 12. Installing Shallow Wall Box on Finished Block or Glazed Tile Wall.

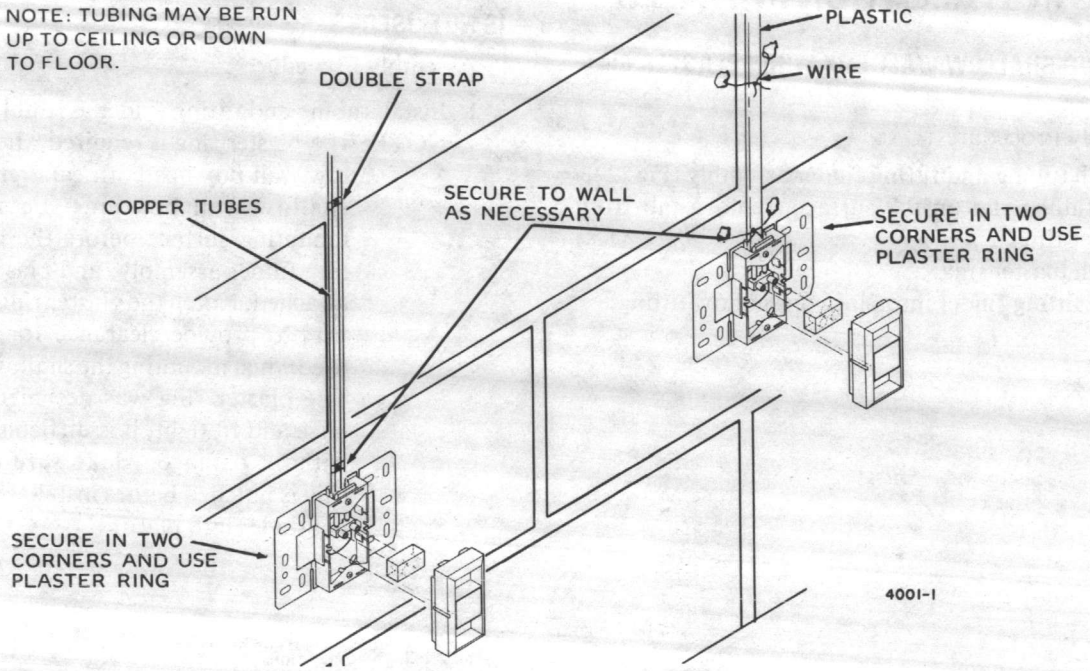

Fig. 13. Mounting Shallow Wall Box and Plaster Ring on Wall to be Plastered.

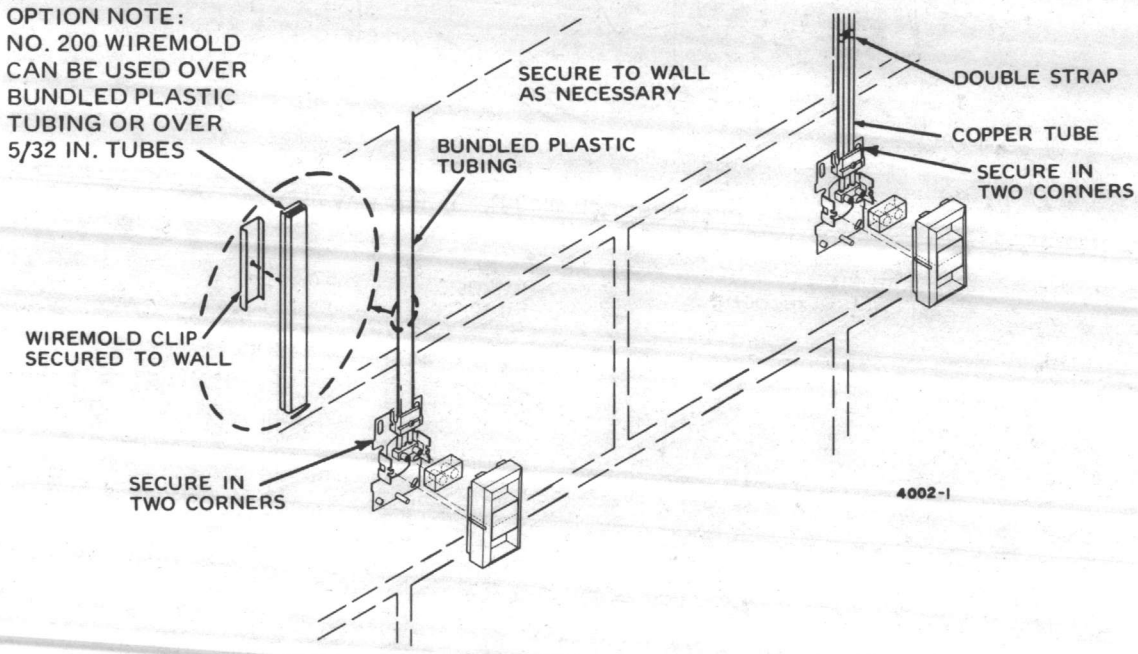

Fig. 14. Mounting Shallow Wall Box Without Plaster Ring on Plastered Block, Concrete, or Tile Walls.

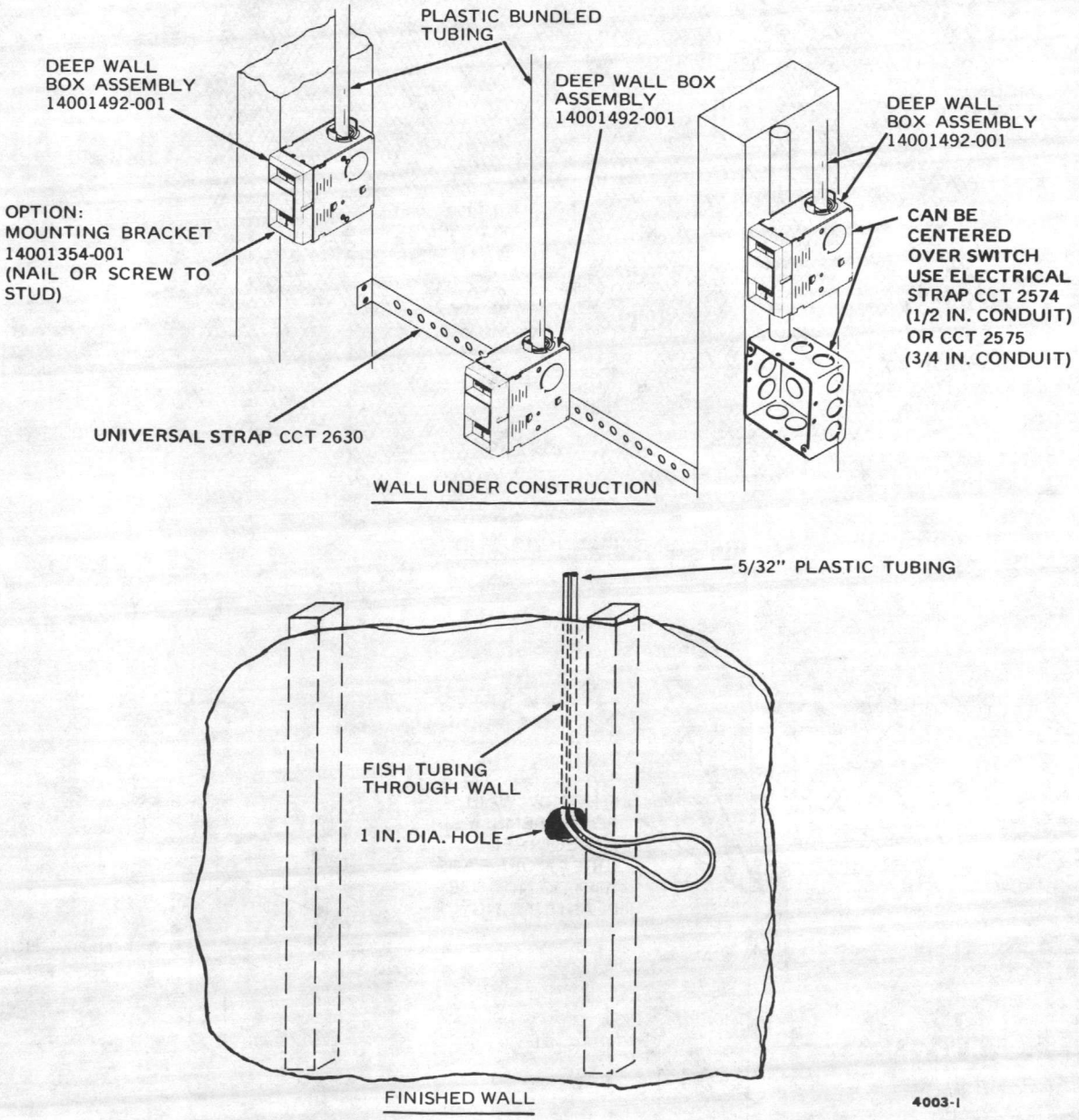

Fig. 15. Fittings Used on Wood or Metal Studs Covered by Sheet Rock, Plaster, or Paneling.

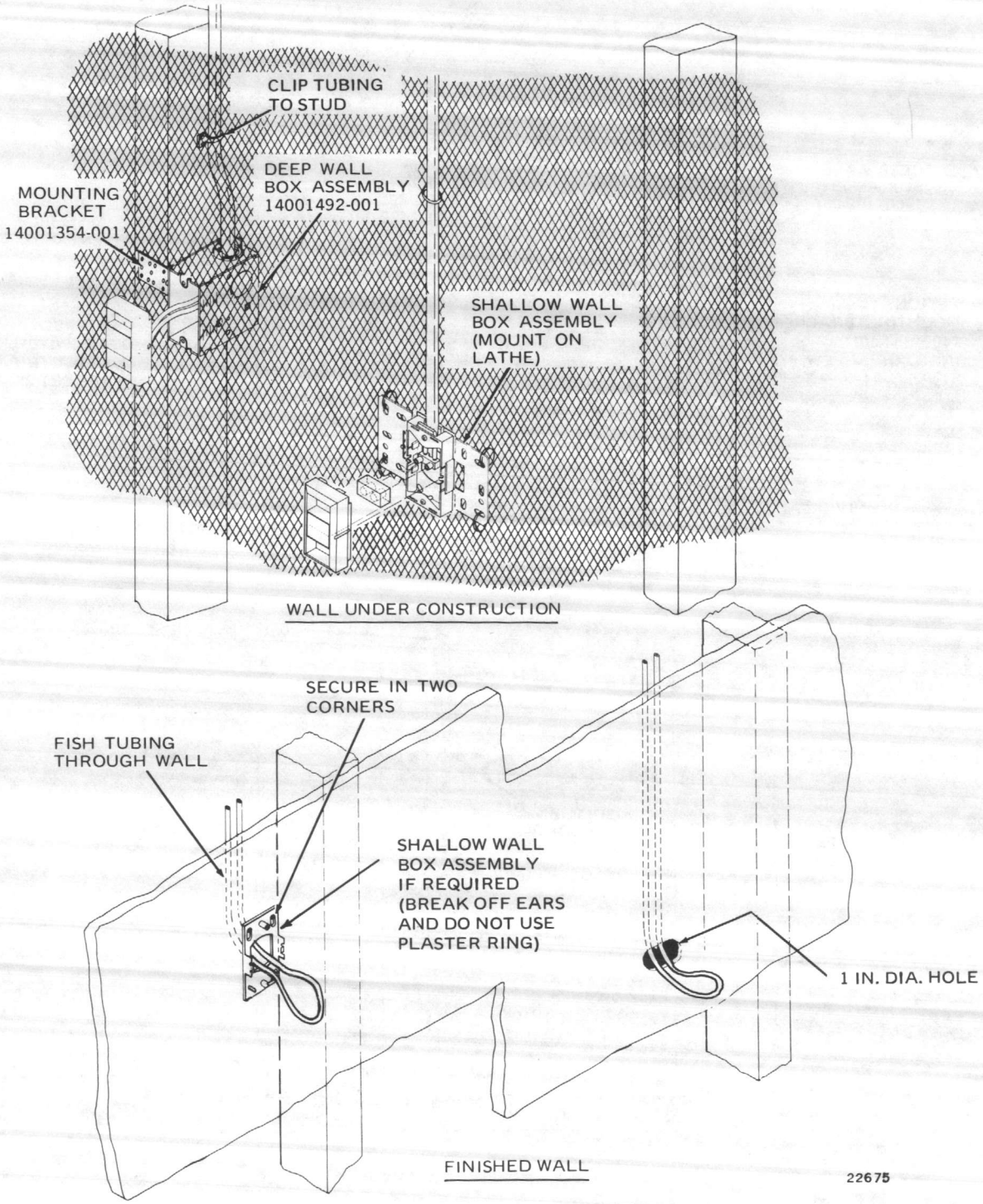

Fig. 16. Fittings Used on Wood or Metal Studs Covered by Wire Lath and Plaster.

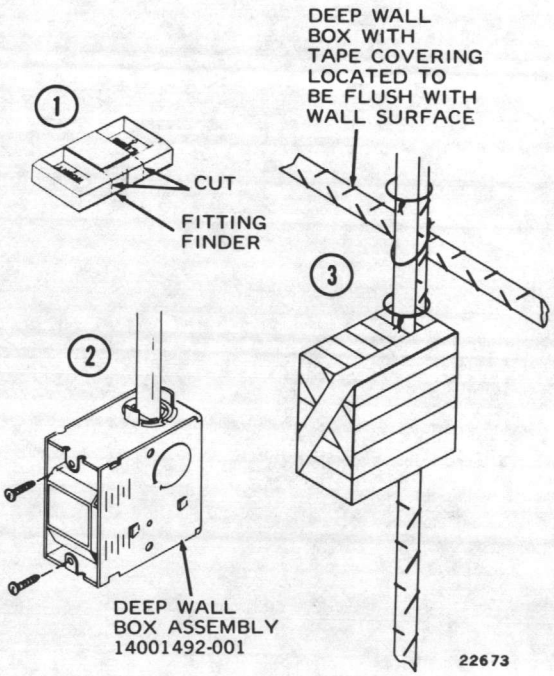

Fig. 17. Preparing Fittings Used in Concrete Pour.

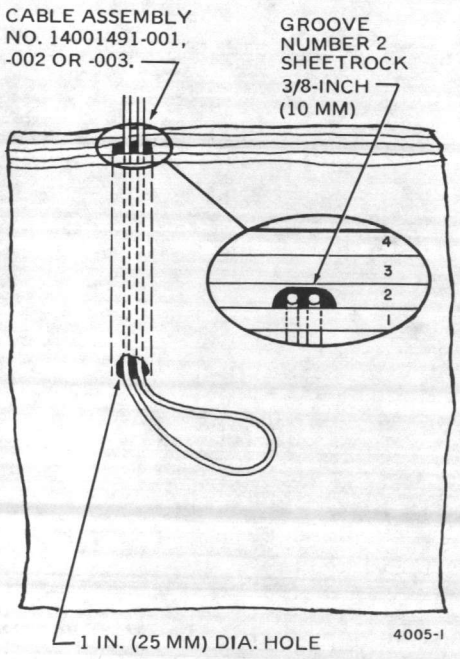

Fig. 18. Fittings Used on Laminated Sheet Rock Walls.

HONEYWELL • Minneapolis, Minnesota 55408 • Scarborough, Ontario MIP 2V9 • Subsidiaries and Affiliates Around the World • Printed in U.S.A.

MAINTENANCE AND REPAIR

T451A,B & T651A LINE VOLTAGE THERMOSTATS

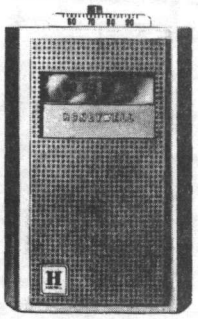

INTRODUCTION

These instructions cover disassembly, maintenance, and repair procedures for the T451 and T651 Thermostats. A complete parts list and exploded view drawing are included. Parts and assemblies are designated by numbers for easy reference. For ordering information see the note following the parts list.

NOTE: Prices may be obtained from our local branch office. Prices and availability are subject to change without notice.

MAINTENANCE

WARNING: Remove the power source from the thermostats before removing the cover; failure to do so could result in serious electrical shock.

Turn off the power to the thermostat and remove the cover. Blow or brush away any accumulated dust or dirt and inspect the device for external or internal damage. Observe the contacts. If they are oxidized, clean them by manually closing the contacts upon a piece of hard finish cardboard (similar to a postcard) and drawing the cardboard from between the contacts, repeating the operation several times to ensure a good clean surface.

CALIBRATION

Turn the adjustment screw (Fig. 3, item 1) clockwise until snug. Place the cover, containing the thermometer, as close to the mounted thermostat as possible. Allow about ten minutes for the temperature of the thermostat to stabilize with the temperature of the thermometer in the cover. Set the lever (Fig. 1, item 23) on the mark of the scale (Fig. 1, item 14) which corresponds to the reading of the cover thermometer.

Turn the adjustment screw (Fig. 3, item 1) counterclockwise slowly until the contacts make.

Check calibration by pushing the lever (Fig. 1, item 23) to the extreme left (opening the contacts) and returning it slowly to the right until the contacts make. Check the indication on the scale, it should correspond to the reading on the thermometer. If the two readings do not correspond, recalibrate.

PARTS LIST

Parts List for Fig. 1

NOTE: The four digit numbers listed in the MODELS column indicate the complete Ordering Specification number of the device. Example: T451B1008. The number in parentheses indicates the quantity of parts used in the device.

KEY	PART NO.		DESCRIPTION	MODELS T451A	T451B	T651A
1	80916D	*	SCREW—#4-40x1/4"—bind hd	1009(1) 1017(1) 1025(1) 1041(1) 1066(1) 1074(1) 1082(1)	1008(1) 1024(1) 1032(1) 1040(1)	1004(1) 1012(1) 1020(1) 1038(1) 1046(1) 1061(1)
2	80993B		SCREW	1033(1) 1058(1) 1090(1) 1108(1)	1016(1)	
3	114014B		MONOGRAM	(1)	(1)	1004(1) 1012(1) 1020(1) 1038(1) 1046(1)
3	114014C		MONOGRAM			1079(1)

Form Number 74-3603
MLF TAB: II. B. 2. a.

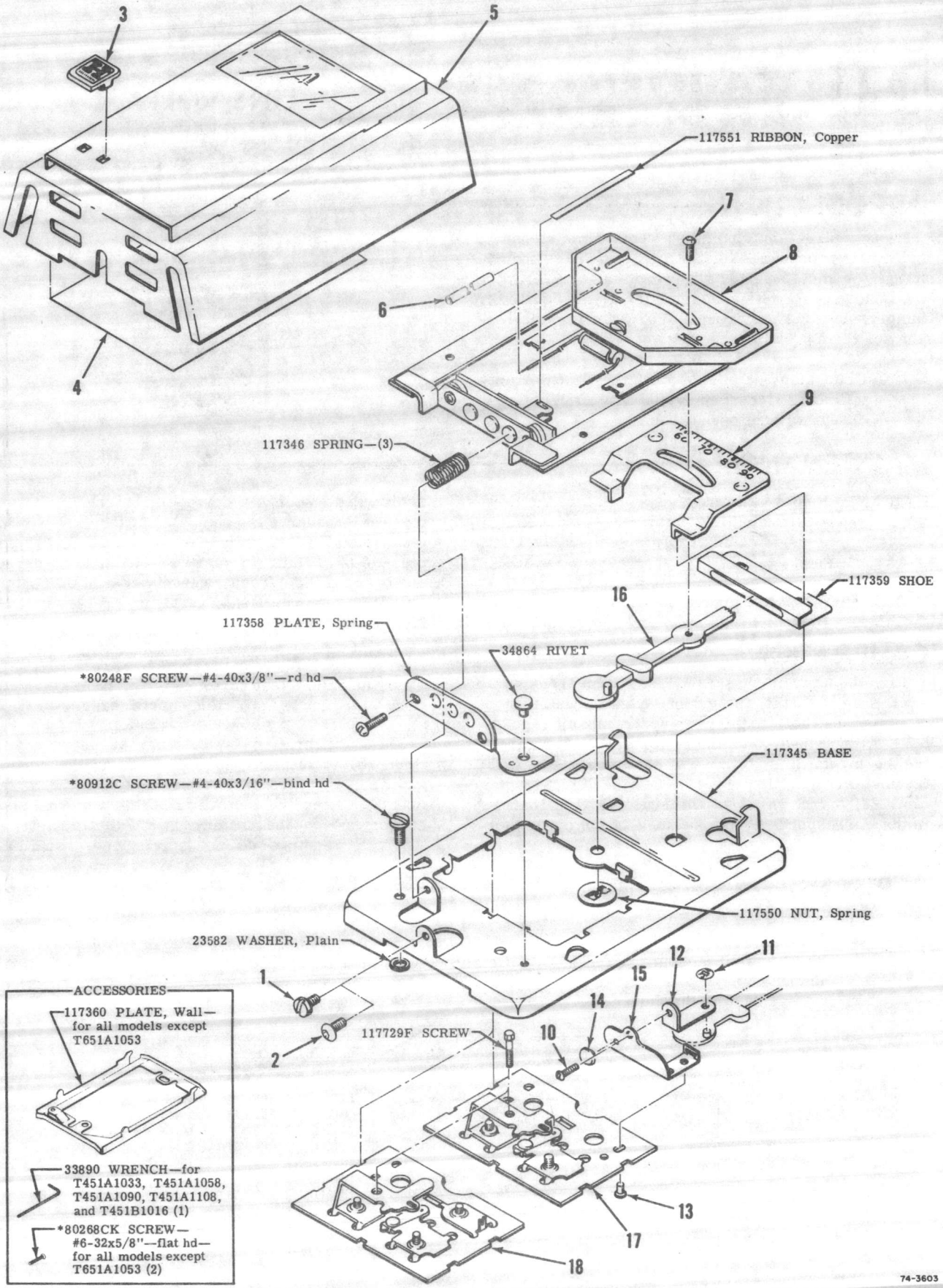

*Standard hardware item which should be obtained locally when possible.

Fig. 1 - T451A, B and T651A Line Voltage Thermostat.

KEY	PART NO.	DESCRIPTION	MODELS		
			T451A	T451B	T651A
4	117379	INSERT	(1)		
4	121043	INSERT		1008(1) 1016(1) 1024(1)	
4	117380	INSERT		1032(1) 1040(1)	
4	117381	INSERT			1004(1) 1012(1) 1020(1) 1061(1) 1079(1)
5	117361A	COVER ASSEMBLY—(See Fig. 2)	1025(1) 1033(1) 1041(1) 1058(1) 1066(1)	1008(1) 1024(1) 1032(1)	1004(1) 1020(1) 1046(1) 1079(1)
5	117361B	COVER ASSEMBLY—(See Fig. 2)	1009(1)	1016(1)	1012(1)
5	117361C	COVER ASSEMBLY—(See Fig. 2)	1017(1)	1040(1)	1038(1)
5	117361D	COVER ASSEMBLY—(See Fig. 2)	1074(1) 1082(1) 1090(1) 1108(1)		
5	117361G	COVER ASSEMBLY—(See Fig. 2)			1061(1)
6	113231E	TUBING		(2)	(2)
7	80993D	SCREW	1033(1) 1058(1) 1090(1) 1108(1)	1016(1)	
8	117343A **	BIMETAL ASSEMBLY—(See Fig. 3)	(1)		
8	117343B **	BIMETAL ASSEMBLY—(See Fig. 3)		1008(1) 1016(1) 1024(1)	
8	117343C **	BIMETAL ASSEMBLY—(See Fig. 3)			1004(1) 1012(1) 1020(1) 1053(1) 1061(1) 1079(1)
8	117343D **	BIMETAL ASSEMBLY—(See Fig. 3)			1038(1) 1046(1)
8	117343E **	BIMETAL ASSEMBLY—(See Fig. 3)		1032(1) 1040(1)	
9	117352A	SCALEPLATE	1025(1) 1033(1) 1066(1)	1008(1) 1016(1) 1024(1) 1032(1)	1004(1) 1012(1) 1020(1) 1046(1) 1061(1) 1079(1)
9	117352B	SCALEPLATE	1009(1) 1074(1) 1108(1)		
9	117352C	SCALEPLATE	1041(1) 1058(1)		
9	117352D	SCALEPLATE	1017(1)	1040(1)	1038(1)
9	117352E	SCALEPLATE	1082(1)		
9	117352F	SCALEPLATE	1090(1)		
10	80989F	SCREW	1041(1) 1058(1) 1090(1)		

KEY	PART NO.	DESCRIPTION	MODELS		
			T451A	T451B	T651A
11	117974	NUT, Spring	1041(1) 1058(1) 1090(1)		
12	117972	CONNECTOR	1041(1) 1058(1) 1090(1)		
13	7056	RIVET	1041(2) 1058(2) 1090(2)		
14	30297	CONTACT	1041(1) 1058(1) 1090(1)		
15	117971	BLADE	1041(1) 1058(1) 1090(1)		
16	117350	LEVER	1009(1) 1017(1) 1025(1) 1041(1) 1066(1) 1074(1) 1082(1)	1008(1) 1024(1) 1032(1) 1040(1)	(1)
16	117351	LEVER	1033(1) 1058(1) 1090(1) 1108(1)	1016(1)	
17	117973B	TERMINAL BOARD ASSEMBLY— (See Fig. 4)	1041(1) 1058(1) 1090(1)		
18	117356B	TERMINAL BOARD ASSEMBLY— (See Fig. 5)	1009(1) 1017(1) 1025(1) 1033(1) 1066(1) 1074(1) 1082(1) 1108(1)		
18	117356C	TERMINAL BOARD ASSEMBLY— (See Fig. 5)		(1)	
18	117356D	TERMINAL BOARD ASSEMBLY— (See Fig. 5)			(1)

*Standard hardware item which should be obtained locally when possible.

**Because the component parts of this assembly are welded together, it is recommended that a complete replacement assembly be ordered.

NOTE: Please order by Part No. and Description. Also, give the complete Order Specification number of the Line Voltage Thermostat. The number is stamped on the bimetal assembly. In some cases it may be necessary to return the entire device to our factory for complete repair and reconditioning. Order from Honeywell, Golden Valley Plant, 1885 Douglas Drive North, Minneapolis 22, Minnesota (In Canada: Honeywell Controls Limited, Vanderhoof Avenue, Leaside, Toronto 17, Ontario). Prices may be obtained from our local branch.

Parts List for Fig. 2

KEY	PART NO.	DESCRIPTION	MODELS		
			T451A	T451B	T651A
1	119175	SCREEN	1017(1) 1025(1) 1033(1) 1041(1) 1058(1) 1066(1) 1074(1) 1082(1) 1090(1) 1108(1)	1008(1) 1024(1) 1032(1) 1040(1)	1004(1) 1020(1) 1038(1) 1046(1) 1079(1)
1	123508A	SCREEN			1061(1)
2	119176	SCREEN	1009(1)	1016(1)	1012(1)
3	117362A	THERMOMETER COVER	1025(1) 1033(1) 1041(1) 1058(1) 1066(1)	1008(1) 1024(1) 1032(1)	1004(1) 1020(1) 1046(1)
3	117362B	THERMOMETER COVER	1017(1)	1040(1)	1038(1)
3	117362C	THERMOMETER COVER	1074(1) 1090(1) 1108(1)		
3	117362D	THERMOMETER COVER	1082(1)		
3	119716A	THERMOMETER COVER			1079(1)
4	111487E	ELEMENT ASSEMBLY	1017(1) 1025(1) 1033(1) 1041(1) 1058(1) 1066(1) 1074(1) 1082(1) 1090(1) 1108(1)	1008(1) 1024(1) 1032(1) 1040(1)	1004(1) 1020(1) 1038(1) 1046(1) 1079(1)
5	117719	POST	1017(1) 1025(1) 1033(1) 1041(1) 1058(1) 1066(1) 1074(1) 1082(1) 1090(1) 1108(1)	1008(1) 1024(1) 1032(1) 1040(1)	1004(1) 1020(1) 1038(1) 1046(1) 1079(1)
6	117361	COVER	(1)	(1)	1004(1) 1012(1) 1020(1) 1038(1) 1046(1) 1061(1) 1079(1)

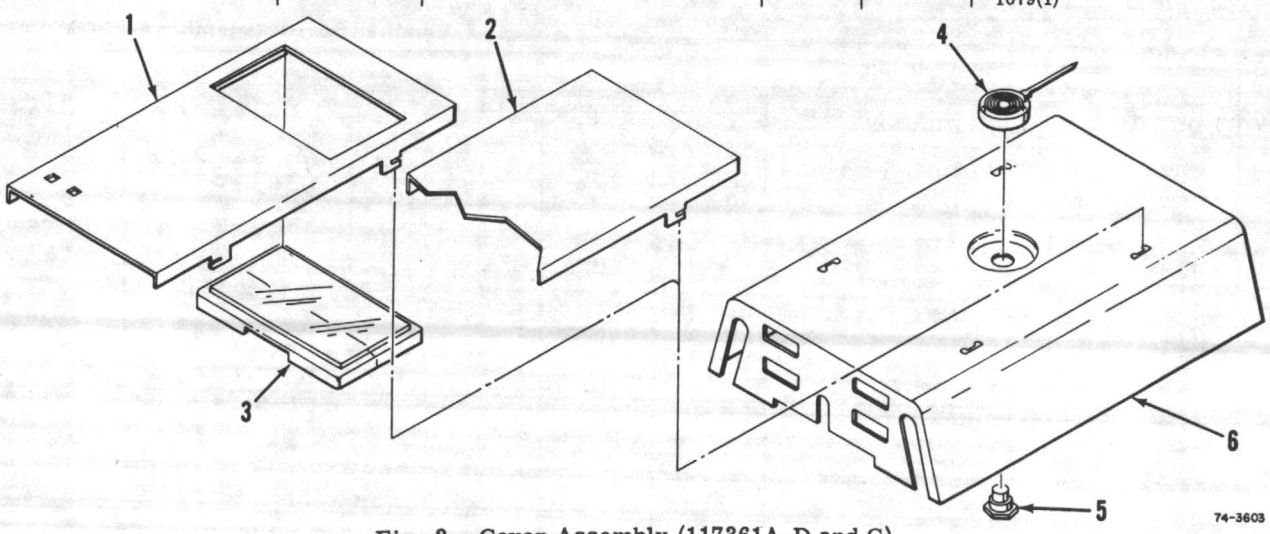

Fig. 2 - Cover Assembly (117361A-D and G).

Parts List for Fig. 3

KEY	PART NO.	DESCRIPTION	MODELS T451A	T451B	T651A
1	121723	SCREW	(1)	(1)	(1)
2	2112EHD	HEATER		1008(1)	1004(1)
				1016(1)	1012(1)
				1024(1)	1020(1)
					1053(1)
					1061(1)
					1079(1)
2	2112BJE	HEATER		1032(1)	1038(1)
				1040(1)	1046(1)

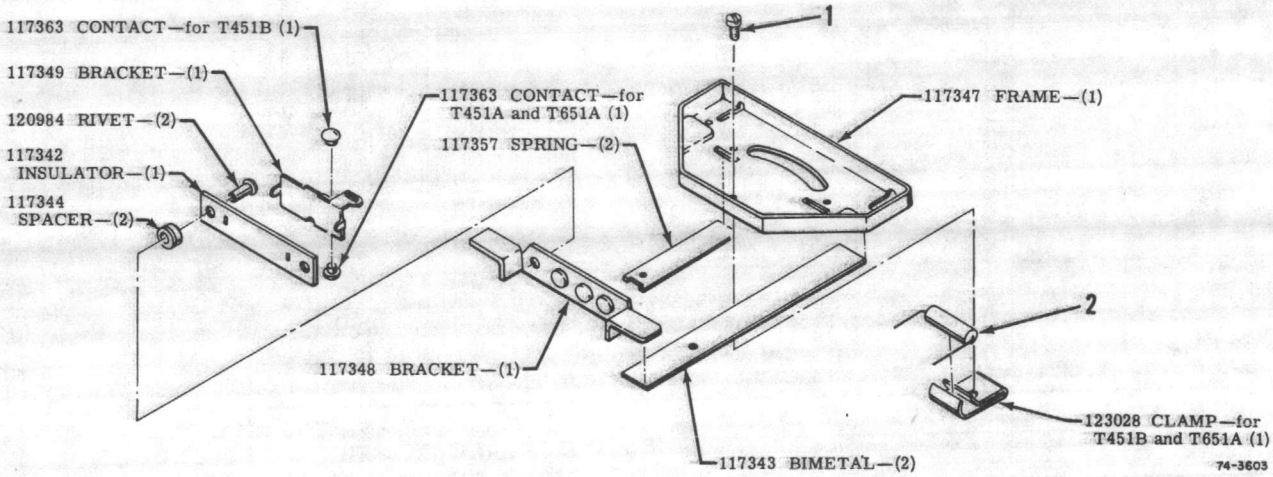

Fig. 3 - Bimetal Assembly (117343A-E).

Mechanical devices must be serviced periodically if they are expected to give continued satisfactory performance, and controls are not an exception. How accurate and how trouble-free your control system will be in the years to come depends largely on the maintenance given it. For best results, all devices in your system should be serviced at one time.

Time and trouble can be saved by arranging with Honeywell for a maintenance agreement which will guarantee expert, economical care, and insure maximum life and efficiency from your system.

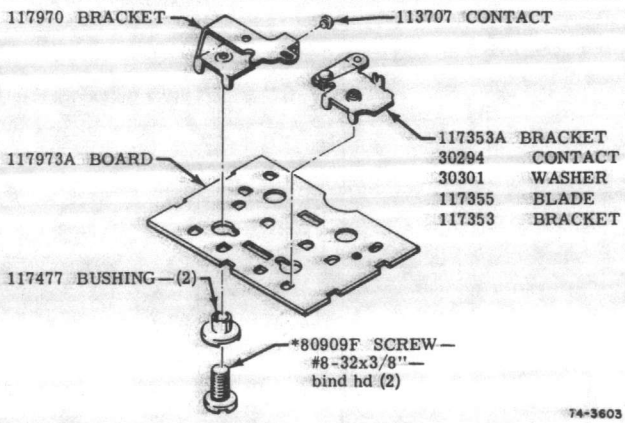

*Standard hardware item which should be obtained locally when possible.

Fig. 4 - Terminal Board Assembly (117973B).

Parts List for Fig. 5

KEY	PART NO.	DESCRIPTION	MODELS T451A	T451B	T651A
1	80909F *	SCREW—#8-32x3/8"—bind hd	(2)	(2)	(3)
2	117477	BUSHING	(2)	(2)	(3)
3	117354	BRACKET, Upper	(1)		
3	117354A	BRACKET, Upper		(1)	(1)
	30294	CONTACT—(1)			
	30301	WASHER—(1)			
	117355	BLADE—(1)			
	117353	BRACKET—(1)			
4	117353	BRACKET, Lower		(1)	
4	117353A	BRACKET, Lower	(1)		(1)
	30294	CONTACT—(1)			
	30301	WASHER—(1)			
	117355	BLADE—(1)			
	117353	BRACKET—(1)			
5	117365	TERMINAL			(1)
6	117356A	BOARD, Terminal	(1)	(1)	(1)

*Standard hardware item which should be obtained locally when possible.

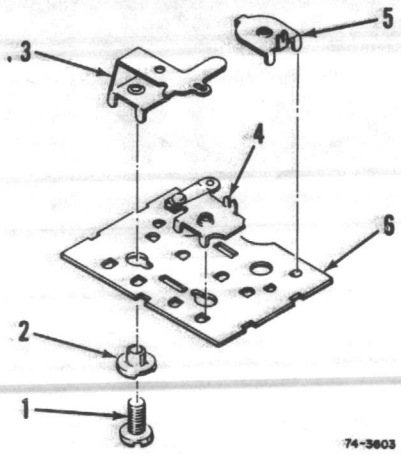

Fig. 5—Terminal Board Assembly (117356B-D).

Honeywell

Comfort Control Systems

RP972A PNEUMATIC REVERSING RELAY

Installation Instructions

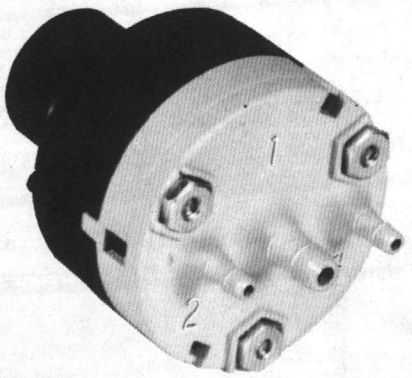

BEFORE INSTALLING, NOTE:

The RP972A Pneumatic Reversing Relay is a modulating relay suitable for all types of heating and air conditioning control systems. It is used as a reversing relay to reverse and increase the capacity of the branch line pressure to the final control element.

INSTALLATION

MOUNTING

The RP972A Reversing Relay is designed and manufactured with simplified installation and mounting in mind. The preferred method is in-line mounting (supported by air lines alone), but it may be mounted on a wall or panel by using either a standard 1-1/2 inch (38 mm) cable clamp or a 1-1/2 inch (38 mm) spring clip. For simplified examples, see Figs. 2 and 3.

PIPING

Use polyethylene tubing for the barb fittings. Port 1 (Main) requires 1/4 inch (6 mm) OD tubing while ports 2 (Branch, Output), 3 (Pilot, Input), and 4 (Exhaust) require 5/32 inch (4 mm) OD tubing.

Copyright © 1985 Honeywell

Form No. 95-7148
Commercial Bldg. Group
MLF TAB: II. C. 5.

Carefully push the tubing over the barbs. No clamp is needed. DO NOT attempt to remove the tubing from the fittings once it has been attached. If a piping change becomes necessary, cut the tubing a few inches from the RP972A and reconnect it with couplings.

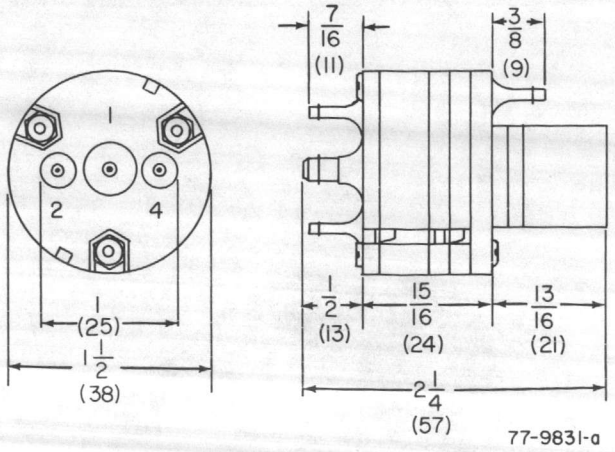

Fig. 1—Approximate Dimensions of the RP972A in Inches (Millimeters).

AIR LINE AND PORT IDENTIFICATION

1. MAIN — 1/4 inch(6mm) O.D.
2. BRANCH — 5/32 inch(4mm) O.D.
3. PILOT — 5/32 inch(4mm) O.D.
4. EXHAUST — 5/32 inch(4mm) O.D.

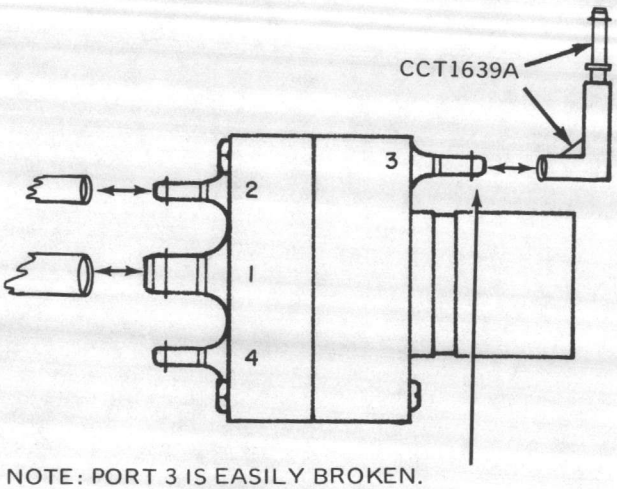

NOTE: PORT 3 IS EASILY BROKEN. SOME APPLICATIONS MAY REQUIRE USING A 5/32" (4 mm) O.D. ASSEMBLY NO. 1639A WHICH IS A COMBINATION ELBOW AND STRAIGHT CONNECTOR.

614-1

Fig. 2—Typical In-Line (Supported by Air Lines) Mounting of the RP972A.

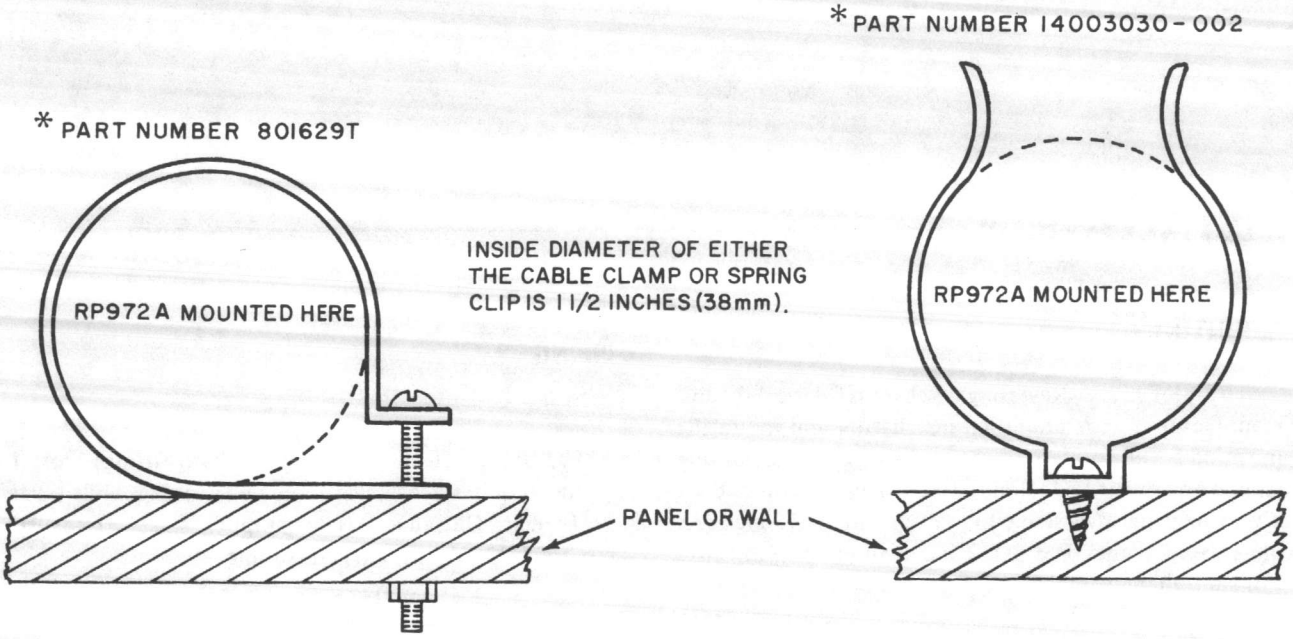

NOTE: THE CABLE CLAMP OR THE SPRING CLIP CAN BE FASTENED TO THE WALL OR PANEL BY USING A STANDARD NUT AND BOLT, A SHEETMETAL SCREW, OR WOOD TYPE SCREW (OBTAIN LOCALLY).

* OBTAIN PARTS LOCALLY OR ORDER FROM THE COMMERCIAL FACTORY.

RP972A-b

Fig. 3—Typical Wall or Panel Mount of the RP972A.

ADJUSTMENTS

The slotted plunger on the narrow end of the RP972A Relay (see Fig. 4) is a screwdriver adjustable bayonet lock that can be set at three positions: A, B, and C. Each position provides a different value for "K" in the following equation:

Output = K - Input

The values of "K" are:

Position A – 13 psi (90 kPa): Used to assure zero output when input is limited to 13 psi (90 kPa) maximum.

Position B – 16 psi (111 kPa): Used for 3-13 psi (21-90 kPa) operating range.

Position C – 18 psi (125 kPa): Used for 3-15 psi (21-104 kPa) operating range.

NOTE: The RP972A is factory set at Position B and in most applications need not be changed.

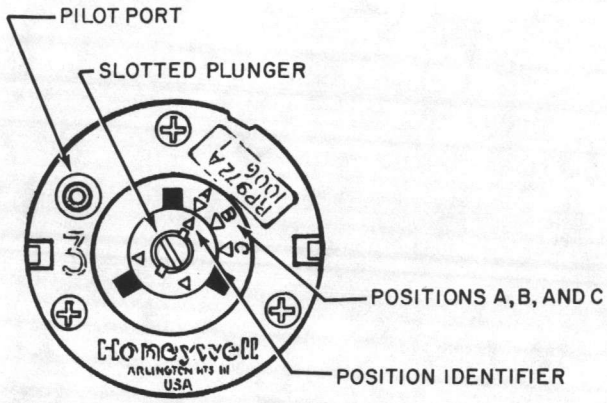

Fig. 4–Backside View of the RP972A, Illustrating Plunger and Three Positions. (Relay is Factory Set on B.)

OPERATIONAL CHECKOUT

The RP972A Relay should reverse the branch line signal to the final control element. With zero pilot pressure and main line pressure applied, branch line pressure should equal "K" value (in equation) or main line pressure if lower than "K". Each psi of pilot increase should result in a psi of branch decrease. For an example of a typical operational application, see Fig. 5.

If no reversing occurs, or if a high reverse signal occurs, recheck the setting of the slotted plunger. It may be lodged between detents. Gently insert a screwdriver in the slot and twist it back and forth. If the plunger was between settings, it will snap into position. The plunger should be flush with the top in the A position and should adjust increasingly deeper in positions B and C.

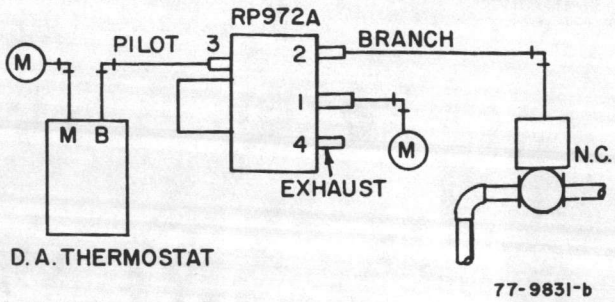

Fig. 5–Typical Operation.

HONEYWELL • Minneapolis, Minnesota 55408 • Scarborough, Ontario • Subsidiaries and Affiliates Around the World. • Printed in U.S.A.

Honeywell

Comfort Control Systems

RP920A-D MODULAR PNEUMATIC CONTROLLER

Installation Instructions

BEFORE INSTALLATION, NOTE:

The RP920 Modular Pneumatic Controllers, in conjunction with remote sensors, provide proportional or proportional plus integral control of temperature, humidity, pressure, airflow, or dewpoint in heating and air conditioning systems.

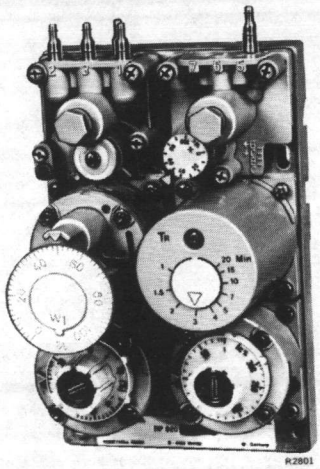

INSTALLATION SPECIFICATIONS

MODELS:

RP920A: Single Input Proportional Controller.
RP920B: Dual Input Proportional Controller.
RP920C: Single Input Proportional plus Integral Controller.
RP920D: Dual Input Proportional plus Integral Controller.

DIMENSIONS: See Figures 1 and 2.

AIR CONNECTION: Combination 5/32-inch (4 mm) and 1/4-inch (6 mm) push-on barb. Optional connections to Port 4, 6, 7, or 8 use 5/32-inch (4 mm) push-on barb 14003755-001 only.

MAIN AIR SUPPLY: 18 psi (125 kPa) minimum.

MAXIMUM SAFE AIR PRESSURE: 30 psi (200 kPa).

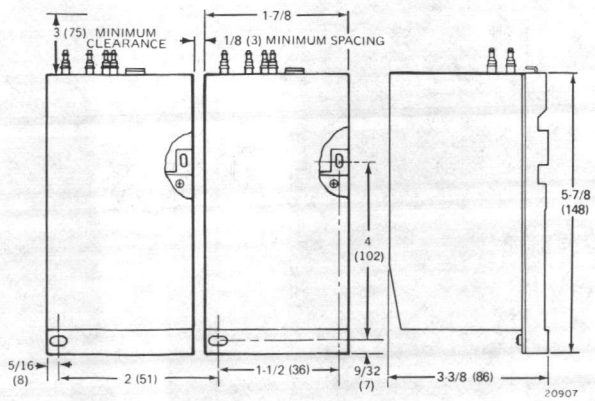

Fig. 1. RP920A Dimensions in Inches (Millimeters).

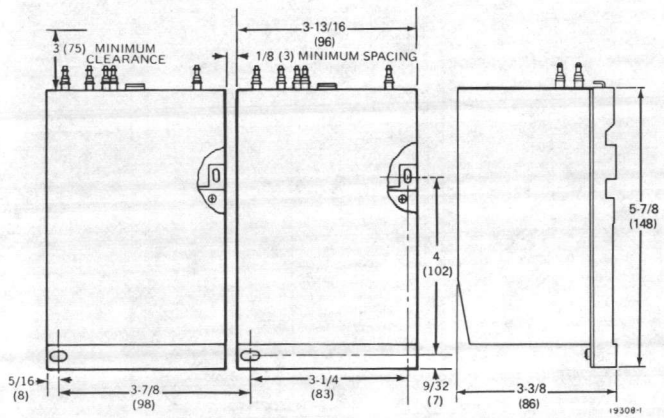

Fig. 2. RP920B, C, and D Dimensions in Inches (Millimeters).

INSTALLATION

BEFORE MOUNTING ADJUSTMENTS

1. If connection to Port 4, 6, 7, or 8 (Fig. 3) is required, remove self-tapping screw from Port 8 and use screw to tap port.
2. Install barb fitting and O-ring (14003755-001) finger-tight in appropriate Port.
3. Reinstall screw in Port 8 if not used.

Copyright © 1985 Honeywell Inc.

Form No. 95-7392
Commercial Bldg. Group
MLF TAB: II. C. 6.

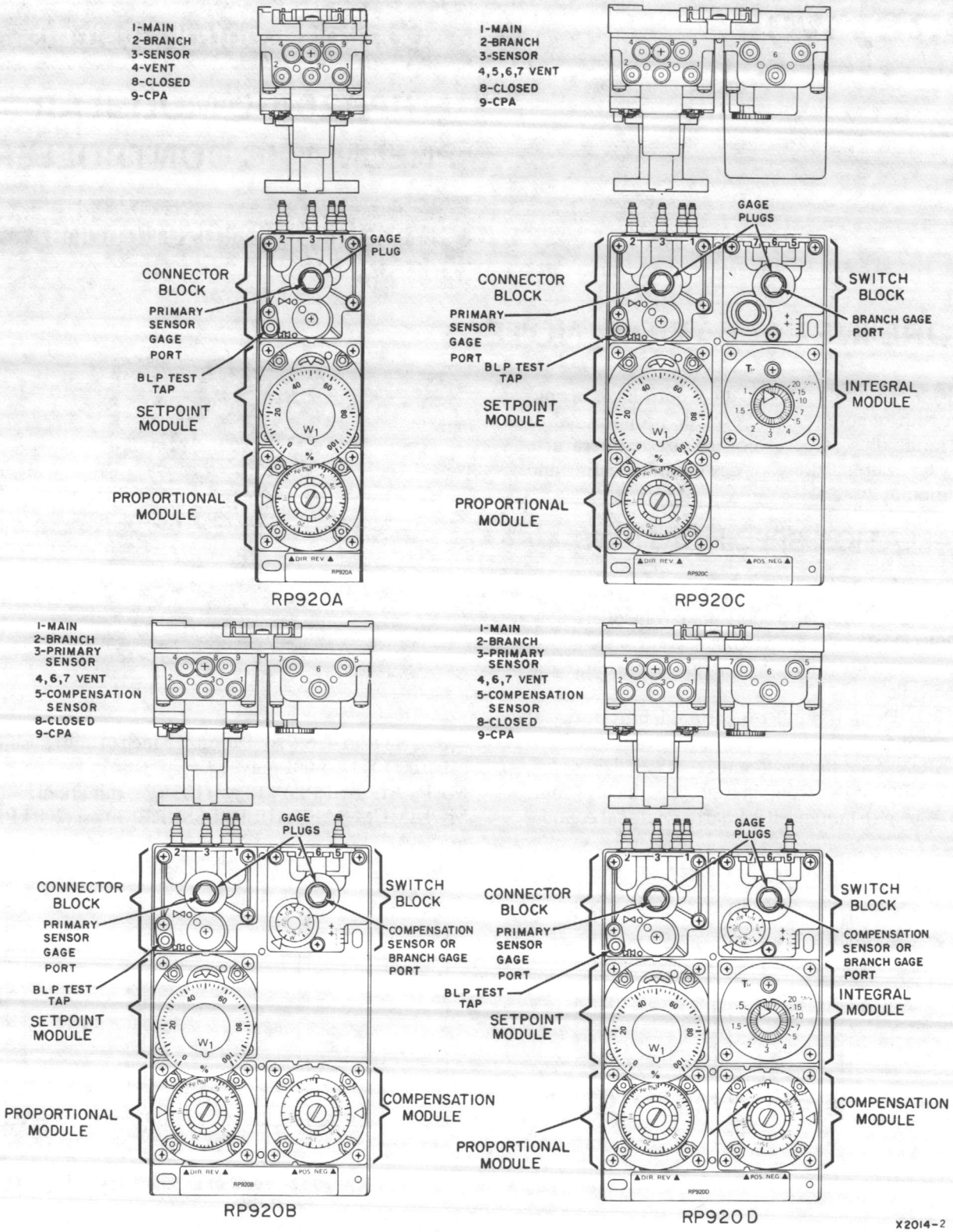

Fig. 3. Module and Port Locations.

PRIMARY SENSOR AIR SUPPLY

If a remote restriction is used for the primary sensor; block the internal air supply (can adjust after gage installation, but easier before):

1. Loosen screw one turn (Fig. 4) and rotate switchplate (light grey) 90 degrees counterclockwise to sensor supply blocked position.

2. Retighten screw.
   NOTE: The compensation sensor requires an external restricted main air supply.

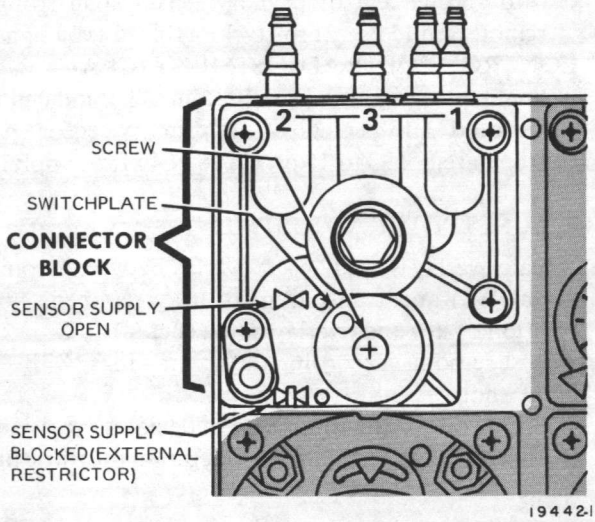

Fig. 4. Primary Sensor Air Supply.

DEVICE MOUNTING

NOTE: All other adjustments may be made before or after mounting.

1. Mark and drill two mounting holes for No. 8 fasteners. Use device as template, or use dimensions in Figures 1 and 2.
2. Mount controller with two No. 8 fasteners.

CONNECTIONS

1. Push tubing on barb connections according to job drawings. See Figure 3 for port locations.
2. Install gage or plug:
   a. If a gage is not to be used, tighten gage plugs finger-tight. If a gage or gages are used, remove plug and by hand, screw gage in to gage port three turns.
   b. If gage is not oriented for correct viewing, rotate the gage counterclockwise until correct.

BEFORE OR AFTER MOUNTING ADJUSTMENTS

CHANGE CONTROLLER ACTION

1. Loosen four screws (Fig. 5) on proportional module.
2. Remove module. Rotate the module and its gasket 180 degrees, and reinstall. Ensure that the notch on the module lines up with the proper indication on the base.
3. Retighten the four screws.
4. Recalibrate if required.

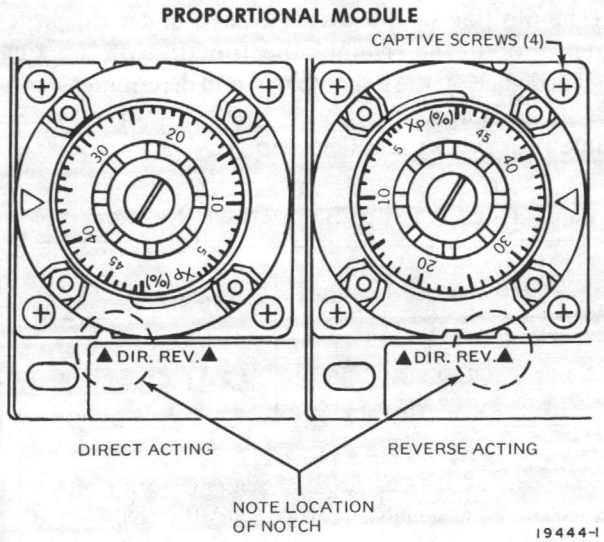

Fig. 5. Changing Controller Action.

CHANGE FROM NEGATIVE (WINTER) TO POSITIVE (SUMMER) COMPENSATION (RP920B AND D ONLY)

1. Loosen four screws (Fig. 6) on compensation module.
2. Remove module. Rotate the module and its gasket 180 degrees, and reinstall. Ensure that the notch on the module lines up with the proper indication on the base.
3. Retighten the four screws.
4. Recalibrate if required.

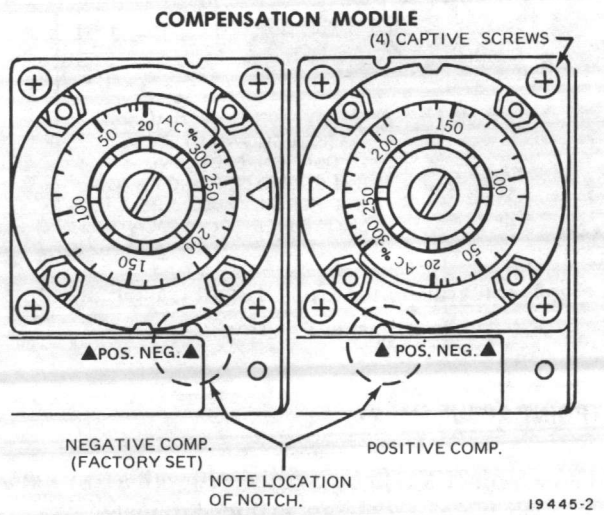

Fig. 6. Changing from Negative to Positive Compensation.

INTEGRAL ACTION CUT-OFF AND GAGE FUNCTION (RP920C and D)

The position of the gasket located under the switch block module determines the function of the field installed gage on the switch block and determines if integral action cut-off function is enabled or disabled. See Table 1 for factory and field settings.

Table 1. Switch Block Gasket Position.

Model	Factory Setting	Field Options
RP920B	B	C
RP920C	B	B+
RP920D	B	C, C+, B+

B = Branch Line Gage.
C = Compensation Sensor Gage.
\+ = Integral Action Cut-Off Enabled.

1. Check position of gasket tab (Fig. 7 front).
2. Loosen three screws on switch block and remove module. Remove gasket and note the letters (B, B+, C, C+) embossed on the back of module.
3. Rotate and/or flip the gasket until the gasket position matches the functions desired (Fig. 7 back). When correct, only the desired letter shows.
4. Reinstall switch block and tighten the three screws.
5. Connect integral action cut-off switching components to Ports 6 and 7, if used.

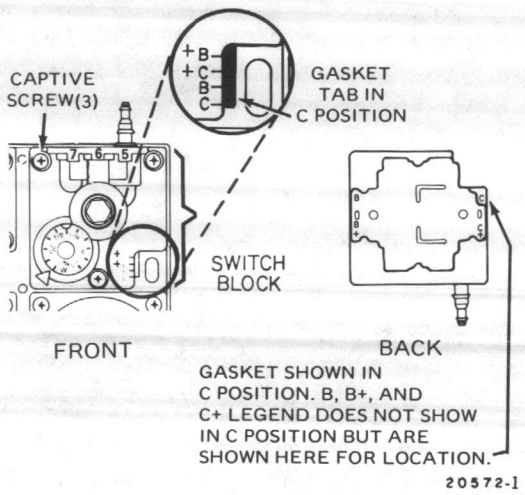

Fig. 7. Integral Action Cut-Off and Gage Function Gasket Position.

SETPOINT ADJUSTMENT

The setpoint (W1) knob is embossed with a 0 to 100% scale. Scale plate overlays are included to match various sensor ranges.

Three methods of controlling setpoint are available:

LOCAL SETPOINT—Setpoint adjusted directly on controller.

REMOTE SETPOINT—Setpoint controlled from 0 to 100 percent of primary sensor span from a remote 3 to 15 psi (21 to 104 kPa) bleed-type signal.

CONTROL POINT ADJUSTMENT (CPA)— Baseline setpoint adjusted on the controller and can be adjusted ±15 percent of the primary sensor span from a remote 3 to 15 psi (21 to 104 kPa) supply.

LOCAL SETPOINT ADJUSTMENT

1. If scale overlay is used, insert overlay between setpoint knob (W1) and transparent overlay retainer. Note position of key and overlay notch (Fig. 8).
2. Adjust setpoint, according to job drawings, with setpoint knob.
3. Calibrate only if the control point deviates excessively from setpoint, taking into consideration the throttling range.

REMOTE SETPOINT

1. Adjust setpoint knob to 100% (Fig. 8) or to the maximum setpoint value desired.
2. Install 14003755-001 Connector to Port 8 and connect to a bleed-type remote setpoint device (e.g., SP970) and remote setpoint gage.

CONTROL POINT ADJUSTMENT (Optional)

1. Pipe CPA device to Port 9.
2. Select proper scaleplate overlay, if used.
3. Insert scale overlay between setpoint knob and transparent overlay retainer. Note position of key and overlay notch (Fig. 8).

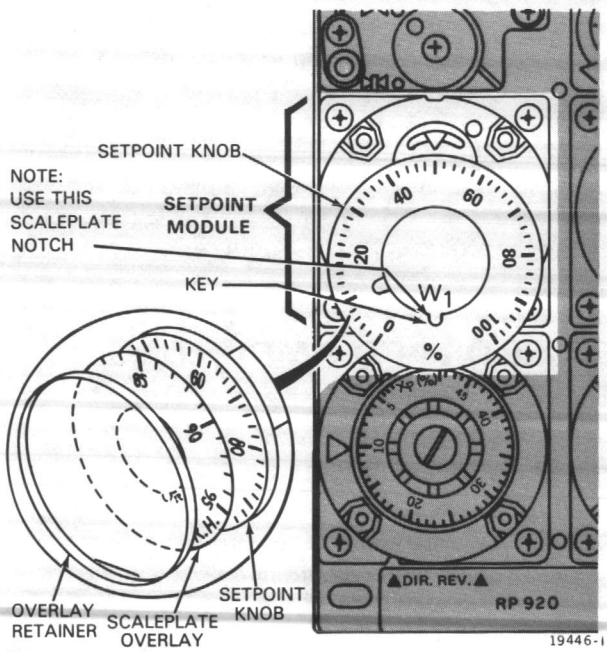

Fig. 8. Setpoint Adjustment.

PROPORTIONAL BAND ADJUSTMENT

Adjust proportional band (Xp), according to job drawings, with proportional band adjustment knob (Fig. 9).

AUTHORITY ADJUSTMENT (RP920B AND D ONLY)

Adjust authority (Ac), according to job drawings, with authority adjustment knob (Fig. 9).

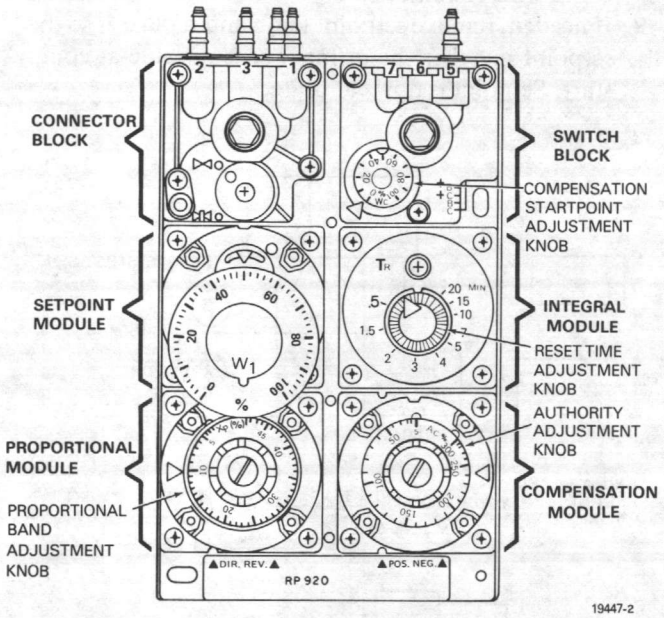

Fig. 9. Adjustments.

COMPENSATION STARTPOINT ADJUSTMENT (RP920B AND D ONLY)

Adjust compensation startpoint (Wc), according to job drawings, with compensation startpoint adjustment knob (Fig. 9). If value given is not in percent, convert to a percentage of the compensation sensor range or use Table 2.

EXAMPLE:

A 40 F startpoint is given with a 0 to 200 F compensation sensor, the compensation startpoint is 20%.

RESET TIME ADJUSTMENT (RP920C AND D ONLY)

Adjust reset time (Tr), according to job drawings, with reset time adjustment knob (Fig. 9). Decrease setting until system becomes unstable. Increase setting slightly until system becomes stable.

COVER

1. If cover is used, snap cover straight on from the front.
2. Cover may be further secured by tightening self-tapping screw in lower right corner of cover.

CALIBRATION

SENSORS

Sensors need no separate calibration as they are calibrated to the system.

SYSTEMS

Factory calibration with field calculated settings are usually adequate for startup on most systems. If it is determined that close calibration of the system is required, use the following procedures to calibrate the system:

If CPA is used, apply 9 psi (62 kPa) to Port 9. If remote setpoint is used, block Port 8.

Use Table 2 to convert temperature to either pressure or percentage. To use Table 2:

1. Find the correct sensor column.
2. Find the desired temperature in the column.
3. Read equivalent pressure in the far right column.
4. Read equivalent percentage in the far left column.

RP920A SYSTEM

1. Install a temporary receiver gage (matching primary sensor) or a 0 to 30 psi gage in the primary sensor gage port if one is not permanently installed.
2. Apply MLP to system.
3. Install a 0 to 30 psi gage in BLP test tap (moisten needle before inserting).
4. With sensor at or near the desired control point, adjust the setpoint (W1) knob until the BLP equals the center of the controlled device throttling range, e.g., 8 psi.
   NOTE: For most accurate calibration the actual measured variable at the sensor must be ± 10 percent of the expected setpoint.
5. If the sensor is greater than plus or minus 20 percent of the expected setpoint, remove the sensor tubing from Port 3 and apply a pressure equivalent (expected setpoint) with a CCT816B Test Set.
6. If setpoint and primary sensor gage do not match, remove setpoint knob and replace it so the setpoint matches the actual primary sensor gage reading.
7. Readjust setpoint (W1) to desired setpoint.
8. Calibration is complete.

1. Install a receiver gage matching the compensation sensor or a 0 to 30 psi gage to Port 5 as shown in Figure 10.
   NOTE: If the controller is setup for a compensation gage in the right gage port, block Port 5 and use the existing gage.
2. Install a 0 to 30 psi gage in BLP test tap or in BLP gage port if one is not permanently installed.
3. Apply MLP to system.
4. Adjust authority knob (A_c) to minimum.
5. Adjust compensation startpoint knob (W_c) until receiver gage reads the pressure equivalent of the compensation startpoint (Fig. 11 or 12). If W_c and desired startpoint do not match, remove knob and replace so they do match. Compensation startpoint is now calibrated.
6. Set up controller calibration tool CCT816B (Fig. 13) to Port 3 (primary sensor).
   NOTE: Sensors are not connected.
7. Apply pressure equivalent to the primary sensor value at compensation (comp) start on the reset schedule (Fig. 11 or 12).
8. Adjust the setpoint (W1) knob until the BLP equals the expected pressure of the controlled device with comp start conditions.
9. If needed, remove setpoint knob and replace it so the setpoint matches the primary sensor value at comp start. Setpoint is now calibrated.

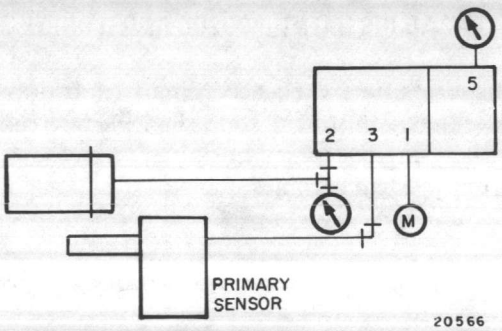

Fig. 10. Piping for RP920B Compensation Startpoint Setting.

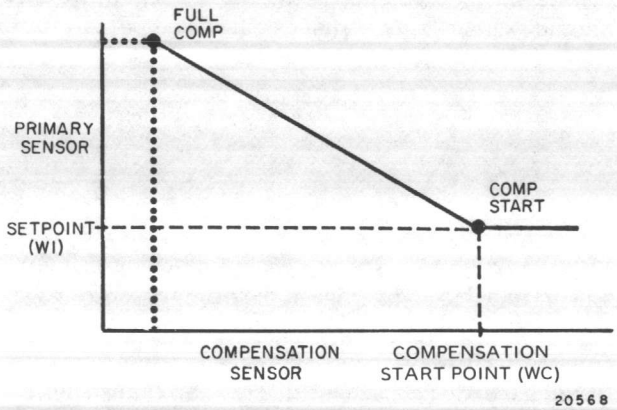

Fig. 11. Negative Compensation Calibration Reset Schedule.

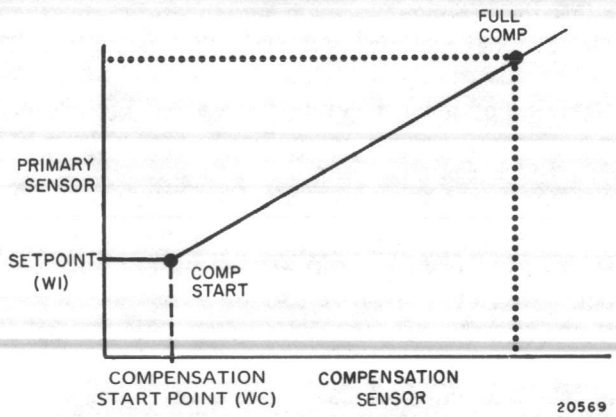

Fig. 12. Positive Compensation Calibration Reset Schedule.

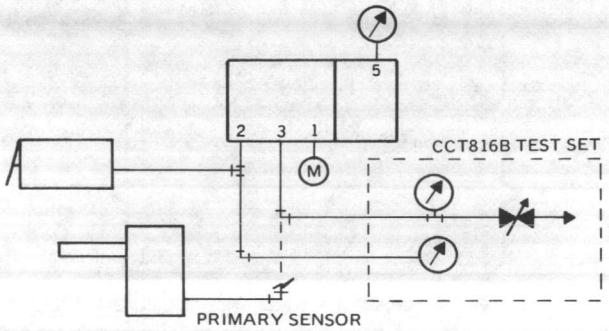

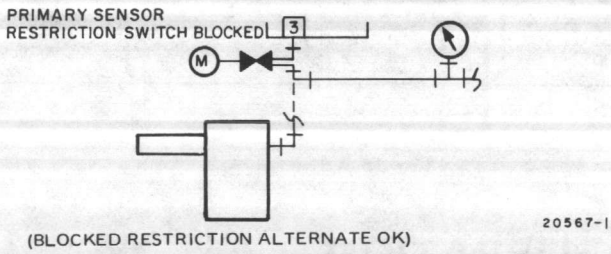

Fig. 13. RP920B Setpoint (W1) Test Set Piping.

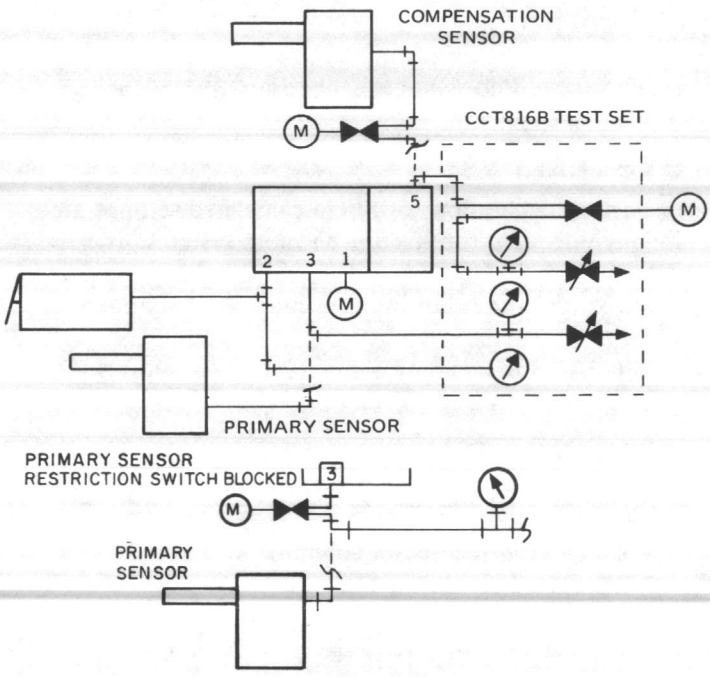

Fig. 14. RP920B Authority (Ac) Test Set Piping.

10. Set up a controller calibration tool CCT816B (Fig. 14) to Port 3 (primary sensor) and Port 5 (compensation sensor).
11. Apply sensor input pressures equivalent to the full compensation on the building schedule.
12. Adjust authority knob (Ac) until the BLP equals the expected pressure of the controlled device with full compensation conditions.
13. Calibration is complete.
14. Changing Wc, W1, or Ac changes the system reset schedule.
15. Remove test set and pipe sensors.

RP920C AND D SYSTEMS

1. Remove screw from integral module (Fig. 15) and install Barb Fitting 14003755-001 in its place.
2. Apply 8.0 psi (55 kPa) to the integral module.
3. Calibrate the RP920C following the procedure for the RP920A.
4. Calibrate the RP920D following the procedure for the RP920B except that the calibration value of the BLP for Steps 8 and 12 should both be 8 psi.
5. When calibration is complete, remove barb fitting from the integral module and replace the screw.

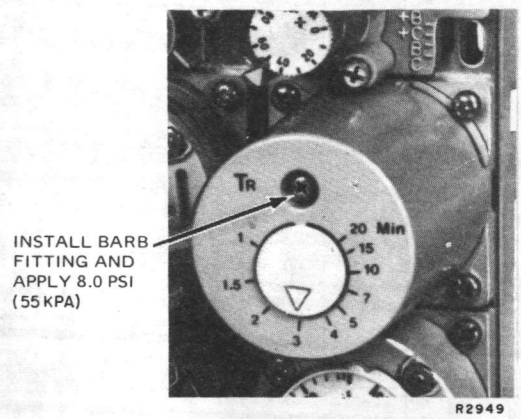

Fig. 15. Integral Module Piping.

RP920B CALIBRATION EXAMPLE:

Assume the following reset schedule.

Compensation Range	Primary Sensor (Discharge)	Compensation Sensor (OA)
Start	120F	60F
Full	160F	0F
Operating Span	40F	60F
Sensor Range	40 to 240F	−40 to 160F

— Assume a 10F Throttling Range.
— Using a 2.5 to 6.5 psi operator with a n.o. valve where 6.5 psi is the no load condition and 2.5 psi is the full load condition.
— See Figure 16 for schedule graph.

Initial Settings:

Setpoint (W1) = 120F = 40% = 7.8 psi.

For Calibration Step 5:
Compensation sensor at Start = Compensation startpoint.
(Wc) = 60F = 50% = 9.0 psi.

For Calibration Step 7:
Primary sensor at Start = 120F or 7.8 psi.

For Calibration Step 8:
Desired BLP = 6.5 psi.

For Calibration Step 12:
Primary sensor at Full Compensation = 160F = 10.2 psi.
Compensation sensor at Full Compensation = 0F = 5.4 psi.
Expected BLP = 2.5 psi.

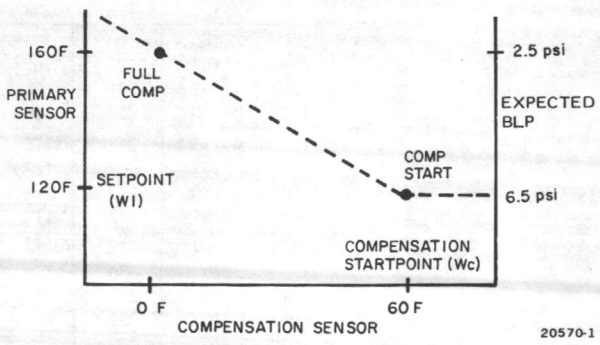

Fig. 16. Calibration Example Reset Schedule.

Table 2. Sensor Value to Pressure or Percentage Conversion Chart.

%	-40 to 160F	0 to 200F	40 to 240F	25 to 125F	-20 to 80F	50 to 100F	15 to 75%	15 to 85%	65 to 95%	PSI
0	-40	0	40	25	-20	50	15	15	65	3
2	-37	3	43	27	-19	51	17	16	66	3.2
3	-33	7	47	28	-17	52	19	17	67	3.4
5	-30	10	50	30	-15		21	18	68	3.6
7	-27	13	53	32	-13	53		19	69	3.8
8	-23	17	57	33	-12	54	24		70	4
10	-20	20	60	35	-10	55	25		71	4.2
12	-17	23	63	37	-8	56		23		4.4
13	-13	27	67	38	-7	57	28	24		4.6
15	-10	30	70	40	-5		25	73		4.8
17	-7	33	73	42	-3	58	31	26	74	5
18	-3	37	77	43	-2	59	32			5.2
20	0	40	80	45	0	60	33		75	5.4
22	3	43	83	47	2	61	34	30		5.6
23	7	47	87	48	3	62		76		5.8
25	10	50	90	50	5					6
27	13	53	93	52	7	63	37	34	77	6.2
28	17	57	97	53	8	64	38	35		6.4
30	20	60	100	55	10	65	39	36	78	6.6
32	23	63	103	57	12	66	40			6.8
33	27	67	107	58	13	67	41		79	7
35	30	70	110	60	15		42	40		7.2
37	33	73	113	62	17	68	43	41	80	7.4
38	37	77	117	63	18	69	44	42		7.6
40	40	80	120	65	20	70	45			7.8
42	43	83	123	67	22	71	46		81	8
43	47	87	127	68	23	72	47	46		8.2
45	50	90	130	70	25		48	47		8.4
47	53	93	133	72	27	73	49	48	82	8.6
48	57	97	137	73	28	74		49		8.8
50	60	100	140	75	30	75		50	83	9
52	63	103	143	77	32	76	51			9.2
53	67	107	147	78	33	77	52			9.4
55	70	110	150	80	35		53		84	9.6
57	73	113	153	82	37	78				9.8
58	77	117	157	83	38	79		56		10
60	80	120	160	85	40	80	55	57	85	10.2
62	83	123	163	87	42	81	56	58		10.4
63	87	127	167	88	43	82	57			10.6
65	90	130	170	90	45		58		86	10.8
67	93	133	173	92	47	83	59			11
68	97	137	177	93	48	84	60	63		11.2
70	100	140	180	95	50	85	61	64	87	11.4
72	103	143	183	97	52	86	62	65		11.6
73	107	147	187	98	53	87	63			11.8
75	110	150	190	100	55		64		98	12
77	113	153	193	102	57	88	65			12.2
78	117	157	197	103	58	89		70		12.4
80	120	160	200	105	60	90	66	71	89	12.6
82	123	163	203	107	62	91	67	72		12.8
83	127	167	207	108	63	92	68			13
85	130	170	210	110	65		69		90	13.2
87	133	173	213	112	67	93				13.4
88	137	177	217	113	68	94	70	77		13.6
90	140	180	220	115	70	95	71	78	92	13.8
92	143	183	223	117	72	96	72			14
93	147	187	227	118	73	97		93		14.2
95	150	190	230	120	75		73	82		14.4
97	153	193	233	122	77	98	74	83	94	14.6
98	157	197	237	123	78	99		84		14.8
100	160	200	240	125	80	100	75	85	95	15

Honeywell

Comfort Control Systems

RP418A-C, RP818A, B ELECTRIC-PNEUMATIC RELAYS

Service Data

GENERAL

The RP418 and RP818 Electric-Pneumatic Relays are electrically operated pneumatic switches.

These relays are manufactured by the Skinner Division of Honeywell and are designed for either wall or panel mounting. They can be mounted in any position without affecting the operation of the device. These relays are a direct replacement for the RP417 and RP817 Electric-Pneumatic Relays.

APPLICATION

The RP418 and RP818 Relays are used for interlock between an electrical and a pneumatic control system. They can also be used as stop and bleed relays or as diverting or selector relays. They function as three-way normally open or normally closed air valves, or a three-way diverting control, depending upon the piping hookup. If applied as shown in Figure 1, when the fan is turned on, the coil is energized, passing supply air through Ports 1 and 3 to the damper operator. With the fan off, the supply Port 1 is blocked. Ports 2 and 3 are connected, bleeding the air from the damper operator to atmosphere.

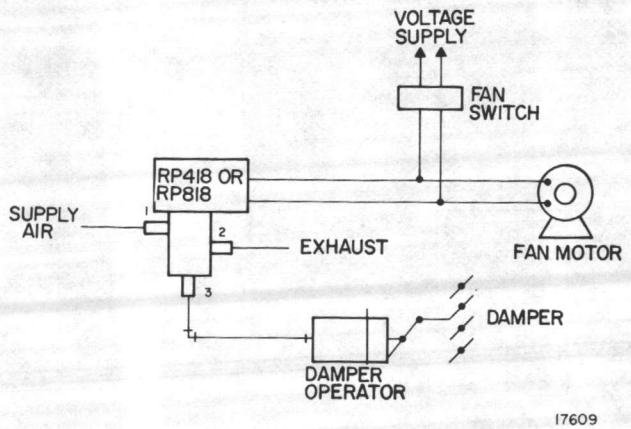

Fig. 1. Typical Piping Hookup of the RP418 or RP818 Relays.

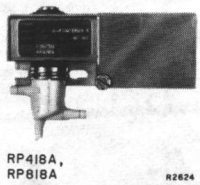

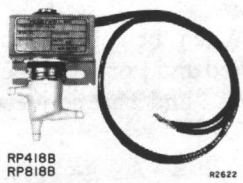

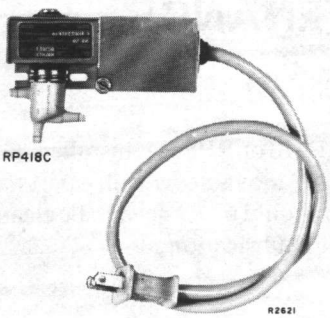

SPECIFICATIONS

MODELS: Refer to Table 1 for model feature variations.

Table 1. RP418, RP818 Model Variation.

Model Number	Line Voltage	Low Voltage	Wall Mount	Panel Mount	Device Mount	Splice Box	Open Coil	Cord & Plug
RP418A	X		X		X	X		
RP418B	X			X			X	
RP418C	X		X		X	X		X
RP818A		X	X		X	X		
RP818B		X		X			X	

Copyright © 1985 Honeywell Inc.

Form No. 85-0065
Commercial Bldg Group
MLF TAB: II. C. 5.

AIR CAPACITY: At 20 lb/in^2 (138 kPa) supply with 1 lb/in^2 (7 kPa) drop: 0.42 standard ft^3/min (0.20 ℓ/s).

PRESSURE RATING: 50 lb/in^2 (345 kPa) maximum.

AMBIENT TEMPERATURE RATING: 0 to 100F (-18 to 38C).

NOTE: For rating up to 120F (49C) refer to Installation Instructions 95-6046.

POWER CONSUMPTION: 4.0 Watts, nominal.

AVAILABLE VOLTAGE/FREQUENCY: See Table 2.

Table 2. Available Voltage/Frequency.

Model	Complete O.S. No.	Voltage/ Frequency
RP418A	1107	110/120, 50/60
	1057	120/50
	1099	220/240, 50/60
	1040	240/50
	1081	208/60
	1115	575/50
	1073	277/60
	1024	277/50
	1065	440/480, 50/60
	1032	480/50
	1016	100/50
	1008	200/208, 50
RP418B	1071	110/120, 50/60
	1030	120/50
	1063	220/240, 50/60
	1022	240/50
	1055	208/60
	1014	208/50
	1048	440/480, 50/60
	1006	480/50
	1089	575/60
RP418C	1004	110/120, 50/60
RP818A	1012	24/50
	1004	24/60
RP818B	1010	24/50
	1002	24/60

OPERATION

When the coil is deenergized, Ports 2 and 3 are connected and Port 1 is blocked. When the coil is energized, Ports 1 and 3 are connected and Port 2 is blocked.

MAINTENANCE

GENERAL

Once the RP418 or RP818 is installed, no maintenance is necessary. All movable working parts are internal to the device and should never need to be cleaned. This relay does not require lubrication.

OPERATIONAL CHECK

Energize the electrical circuit to the relay. Determine whether the switch operates by analyzing airflow to the system parameters.

TROUBLESHOOTING

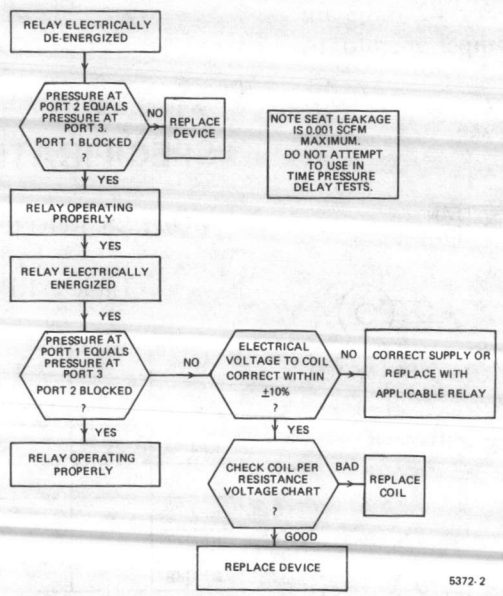

Fig. 2. Troubleshooting Flow Chart.

REPAIR

Coil replacement, the only field repair recommended for the RP418 and RP818 Relays, is described in the following procedures.

WARNING

To protect the eyes and face, and prevent loss of the garter spring while removing it, shield top of relay.

CAUTION

Before attempting any repair, be sure to disconnect electrical power and shut off the air supply to the relay.

1. Using a small screwdriver, pry loose the garter spring positioned at the top of the relay (Fig. 3).
2. Slide the valve body free from the rest of the relay.
3. On RP418C models, disconnect cord and plug.
4. Pull the coil electrical leads (splice box models) through the grommet in the box.
5. Remove the defective coil and replace with new coil in reverse order, aligning the holes so the valve body can slide into place.
6. Reconnect wires of cord and plug (RP418C), by stripping leads and either crimping or using a wire nut.
7. After the new coil has been aligned and assembled to the valve body, reinstall the garter spring over the bushing. Power and air supply can be restored to the relay. Check operation.

PARTS AND ACCESSORIES

PARTS LIST

Refer to Figure 3 and Table 3.

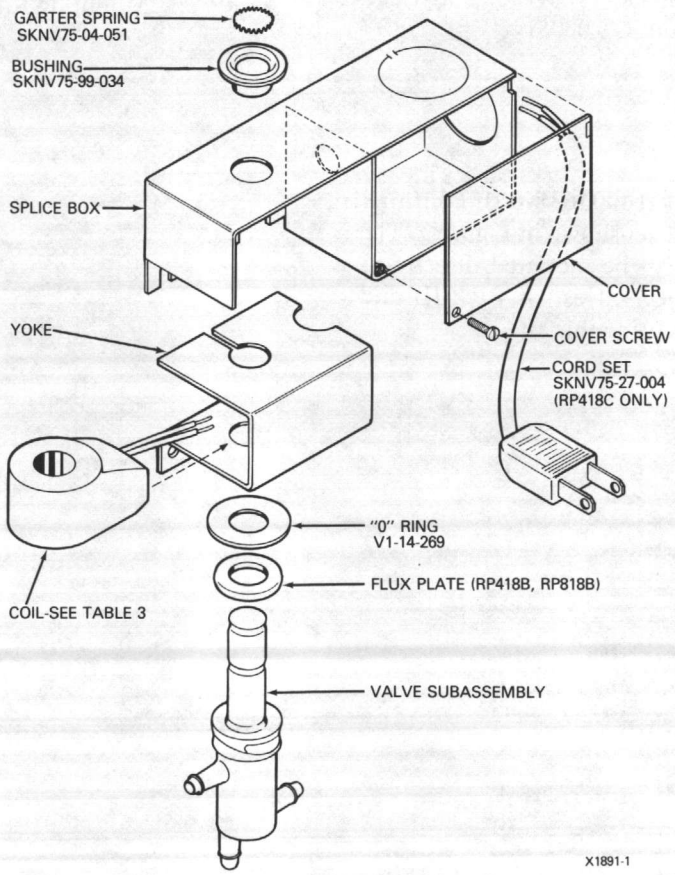

Fig. 3. RP418, RP818 Exploded View.

Table 3. Replacement Coils.

Part No. (1)	Voltage/ Frequency
SKNC75-1904	120/60, 110/50
C75-1905	120/50
SKNC75-1908	240/60, 220/50
C75-1909	240/50
SKNC75-1906	208/60
C75-1907	208/50, 200/50
SKNC75-1910	277/60
C75-1911	277/50
SKNC75-1912	480/60, 440/50
C75-1913	580/50
C75-1903	100/50
C75-1902	25/50
SKNC75-1901	24/60
C75-1914	575/60

(1) All 50-Hz coils without an SKN prefix must be ordered from Skinner Valve Division, 95 Edgewood Ave., New Britain, CT 06051

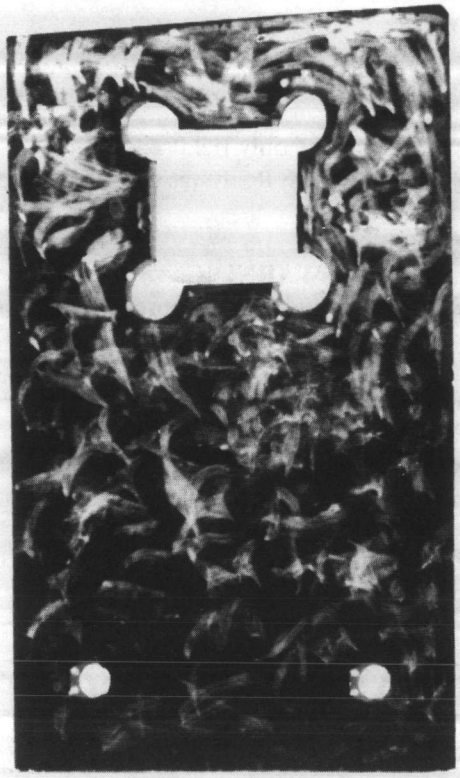

RI409

Fig. 4. Mounting Bracket 14003637-001 (Contained in Mounting Kit 14003638-001).

ACCESSORIES

Optional Mounting Kit 14003638-001 contains 14003637-001 Mounting Bracket shown in Figure 4. The RP418 and RP818 Relays can be mounted directly to MP516A Operators, VP519C Valves, or PP901B and PP902B Pressure Regulators using this kit.

October, 1984
CAP-200B

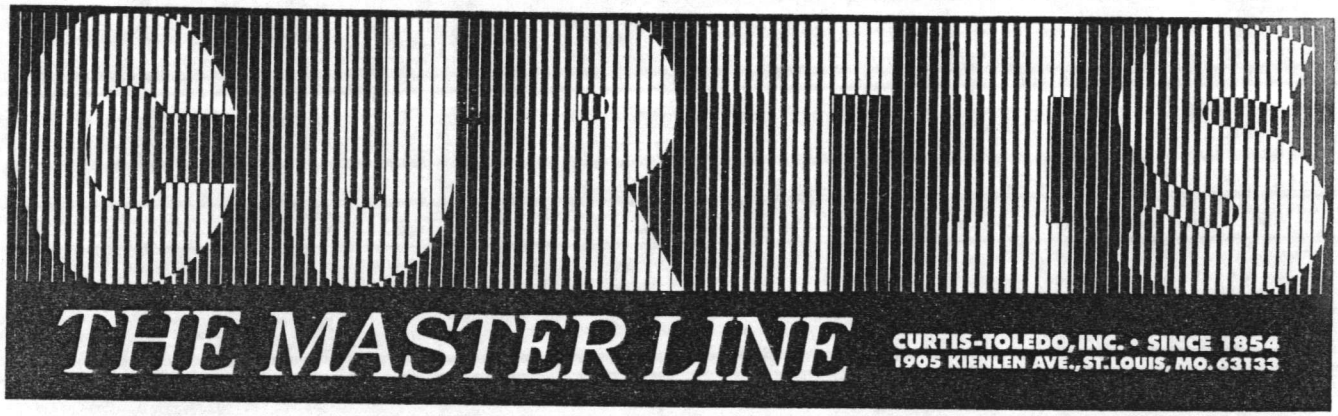

air compressor

INSTALLATION AND OPERATING INSTRUCTIONS

CURTIS COMPRESSOR DIVISION
CURTIS-TOLEDO, INC.

1905 Kienlen Avenue, St. Louis, Missouri 63133
Telephone (314) 383-1300, Telex 44-7610
Sales representatives in principal cities

CUSTOMER SERVICE
DIRECT LINE
(314) 383-2600

WARNING

AIR FROM THESE COMPRESSORS MAY CONTAIN HYDROCARBON AND OTHER CONTAMINANTS; THEREFORE IT IS NOT FIT FOR HUMAN BREATHING UNLESS PROPERLY FILTERED.

IMPORTANT Make a permanent record of the Model and Serial numbers of your machine here. You'll save time and expense by including this reference identification on replacement parts orders.

SERIAL NO. _____

MODEL NO. _____

ELECTRICAL _____ H.P. _____

TABLE OF CONTENTS

Installation 3
Start-Up Procedures 3-4
Limited Safety Precautions 4-5
Trouble Shooting 5-6
Preventive Maintenance 7
Valve Inspection and Maintenance 8
Unloading Mechanism 9-10
Chart "A" Compressor Models & Characteristics List 10
Informative Information:
- Compressor Pump Up Time — Two Stage 725-B 11
- Compressor Pump Up Time — Single Stage 725-B 11
- Bolt Torque For Compressors A-CA-148 12

GENERAL APPLICATION

Curtis Compressors are rugged machines designed to give you years of continuous service. With proper care and regular maintenance your compressor will provide you with the ultimate in performance and satisfaction. Please read this manual carefully to insure years of trouble free performance.

INSTALLATION

CONGRATULATIONS on your new Curtis Air Compressor. Please examine the compressor for shipping damage(s) and if any are found report it immediately to the carrier.

Select a clean dry location with a rigid floor strong enough to support the compressor. If the compressor is to be located in an area where vibration is critical, properly engineered vibration mounts and flexible piping should be used. Remove the skid. **NOTE: The compressor should never be operated on the shipping skid.** Level the compressor so it can be bolted down securely. Before tightening the bolts, check to see that all four feet are resting on the foundation. Shim as necessary to eliminate stress on the receiver or base when the bolts are tightened. We suggest using a level for proper alignment.

Maximum ambient temperature in which the motor should be operated is 104°F and the compressor is 110°F. Therefore, adequate ventilation of cooling air must be provided.

If possible, each compressor should be placed in position where the ambient air is cool and clean. However, should it be necessary to place a compressor in hot or dusty surroundings the inlet air should be drawn through a suction duct from an area as cool and free from dust as possible. Care shall be taken to minimize the entry of moisture with the inlet air.

The asperated air shall be free from flammable fumes or vapors, paint solvents, etc., that can lead to internal fires or explosions.

No compressor shall be installed unless it is provided with an inlet air filter or screen designed, constructed and installed in such a manner that all the air entering the compressor shall pass through the filter system. This filter system shall be in place for and during the initial start-up.

The compressor air intake shall be so arranged that loose clothing, etc. cannot be sucked in and cause personal injury.

The suction opening of the compressor is equipped with a combination air filter-muffler to protect the compressor from normal dust and other harmful substances. Clean and replace filter element as necessary to avoid excessive pressure drop. If the air around the compressor is excessively hot, dusty, humid or contaminated with foreign gases (such as ammonia or acid fumes) move the filter-muffler to a remote point where the air is clean, cool and dry. Run a pipe to the compressor suction opening. If the run is over 50 feet in length, use a larger pipe to avoid excessive pressure drop (See chart A, page 11). In order to fit the filter to the compressor, bush down the connections. Be sure piping and fittings are clean and free from dirt and chips. If the filter is installed outside, check to insure that it is located above the normal outside dust level, and that rain cannot enter the filter element. Where the relocation of the filter-muffler is not possible or feasible, an oil bath filter is recommended and is available from Curtis.

For recommended air distribution piping, see Curtis instructions H-710B, Table #1 and #2 Page 14 and 15.

On basic or base mounted compressors run a discharge pipe to the receiver or optional aftercooler and bush up or down as necessary. The pipe should enter near the top of the receiver. For piping of Curtis supplied aftercoolers, see Curtis instructions CAP111C Pages 20 and 21. Keep in mind that condensate may form in the discharge line, therefore, the lines should always be pitched to drain condensate away from the compressor. Always provide a safety relief valve in the discharge line between the compressor and in-line shutoff valves. If more than one compressor pumps into a common system, a check valve in the discharge line of each compressor is recommended to prevent moisture from entering the cyclinder head when one compressor is idle. In the event a check valve is not used a globe or gate valve may be installed providing a safety relief valve is installed in the line between the compressor discharge and the valve.

Check the electrical supply for voltage, phase, and frequency to see that they match the nameplate stampings on the motor, magnetic starter, solenoids, and other controls. Use electrical wires of adequate size to carry the full load current of the motor without excessive voltage drop. Charts are available from Curtis (upon request) to provide this information. The motor must always be protected by a starter with properly sized thermal overload(s). The starter should protect the motor from overheating and burnout due to an overload, low voltage or single phasing of a 3-phase circuit. **Failure to install the proper starter and overloads will void the motor manufacturers warranty.** Follow the National Electric Code or local electric code in providing wiring, fusing and disconnect switches. **NOTE: Do not close the disconnect switch to start the compressor until the procedures outlined under "Startup Procedures" have been completed.**

START-UP PROCEDURES

Single-stage and two-stage compressors are shipped without oil; except for Models 97, 89, 98, 100, 200, 260, and 300 which are fully charged with oil for normal ambient temperatures above 32° F and under 100°F. Models 260H and 300H are shipped with diester synthetic lubricant. See Chart-A page 11.

OIL RECOMMENDATION

For ambient temperatures between 32-100°F, use a good grade of industrial compressor oil having a viscosity of 300 to 350 SUS at 100°F, with foam, rust and oxidation inhibitors, a minimum viscosity index of 95 and a

minimum life of 1500 hours in the ASTM D-943 test for oxidation stability.

For ambient temperatures below 32°F, a viscosity of 180 to 240 SUS at 100°F, a minimum pour point of -20°F is recommended.

For ambient temperatures above 100°F, use a good grade of industrial compressor oil having a viscosity of 430 to 480 SUS at 100°F, with foam, rust, and oxidation inhibitors, and a minimum life of 1500 hours in the ASTM D-943 test for oxidation stability.

For 260H, 300H, or any compressor operating above 200 PSI, use a diester synthetic lubricant proper for reciprocating compressors, with a SAE grade of 30.

Models 260 H and 300 H are designed to operate in the PSI ranges of 160 to 250 PSI and are shipped with a full charge of "Diester Synthetic Lubricants." When necessary to add lubricant to maintain proper level in the crankcase and when crankcase lubricant is to be changed, synthetic lubricant of the following specification shall be used. Diester Synthetic Lubricant SAE Grade 30W recommended for reciprocating compressors and with the following minimum factors, pour point -30°F, flash 510°F, autoignition 770°F and carbon residue .02%. Note preventive maintenance schedules page 6.

If the compressor is equipped with an automatic start-stop control, dual control (with solenoid valve unloading), or centrifugal unloader, it is automatically unloaded upon starting, and will automatically load after attaining running speed. If the compressor is equipped with a constant speed control (pilot valve unloading), it is necessary to manually unload the compressor, if there is pressure in the discharge line, in order to achieve an unloaded start. The compressor must be manually loaded after the compressor has attained full running speed; thereafter, it functions automatically to maintain operating pressure until the unit is shut off. (See instructions for pilot valve operation, note CAP-167.)

"Lo-Oil Guard" — For compressors equipped with Lo-oil guard see instructions CAP-157-C for wiring and operation. Before initial start up check wiring to the running circuit and the operation by manually lowering oil level to low oil level and reset button after level has been restored.

CHECK DIRECTION OF ROTATION

Close the disconnect switch and start the compressor. Observe the direction of rotation, which should be counterclockwise when viewed from the flywheel side of the compressor on all models. For single-phase units, the direction of rotation is determined by the motor nameplate instructions, and is adjusted at the factory. For three-phase units, if the rotation is incorrect, stop the unit and interchange any two of the three wires to the motor at the disconnect switch. This will reverse the direction of rotation of the motor and compressor.

LIMITED SAFETY PRECAUTIONS

The following safety precautions are recommended in the use of this compressor:

1. Use a totally enclosed OSHA-approved belt guard to cover the drive assembly. Where possible, place the flywheel toward the wall, and mount the unit a minimum distance of 2 feet from the wall for maintenance convenience. For Models 100, 200, 260, and 300, a distance of 3 feet is advised.
2. Turn off the electrical disconnect switch before working on the unit to prevent the unit from starting unexpectedly. **Red tag, danger, this compressor is remotely controlled and may start without warning.**
3. Release all air pressure from the system before working on the unit and red tag all electrical control switches, for safety precaution. **Red tag, compressor work in progress DO NOT START.**
4. Do not by-pass motor overcurrent protection.
5. Do not change the setting or in any way affect the operation of the safety valve.
6. Keep unit securely anchored so that movement will not put a strain on piping, wiring, or air receiver.
7. **POTENTIAL HAZARDS**
   The following clauses present some of the potential hazards accompanying the use of air compressors.

Inadequate lubrication

The more common causes of improper lubrication are:
a) use of incorrect lubricant
b) lack of oil
c) poor maintenance leading to bearing wear with increased clearances and too low oil pressure
d) insufficient or excessive cooling
e) overlubrication

Almost all malfunctions of the lubrication system of compressors lead to a temperature increase which, if the compressor is not stopped, will introduce damage and risk of an oil fire.

Inadequate cooling

Poor cooling can cause excessive temperatures.

Mechanical failures

These usually emanate from one or more of the following causes:
a) excessive pressure
b) overspeed
c) secondary phenomena caused by improper lubrication
d) secondary phenomena caused by improper cooling
e) poor maintenance
f) excessive vibrations or external forces

Bodily damage

The more common potential causes of injury are:

a) Contact with moving parts
b) Contact with hot parts
c) Falling from elevated positions
d) Slipping (e.g. caused by oil spillage)
e) Release of pneumatic energy (e.g. from safety valves)
f) Electrical
g) Use of incorrect tools during maintenance
h) Take the necessary precautionary measures to protect the people in the area where air nozzles are used to blow particles.

Exposure to noise

Noise even at reasonable levels, can cause irritation and disturbance which over a long period of time may cause severe injuries to the human nervous system and can take forms such as lack of sleep, irritation, etc.

Excessive noise may cause loss of hearing. The effect depends on the level and the duration of the exposure. Reference is made to national regulations.

The noise emission from the compressors is not always the most important factor for the total noise level. The noise from the prime movers, gears and other equipment must also be considered.

Take necessary precautionary measures to protect people in the area; ear plugs, sound barriers, etc.; depending on location installation and application.

Fires and explosions in the pressure system

Oil lubricated compressors

It is generally accepted that the occurance of fires in oil lubricated compressor systems is dependent on the build-up of oil degradation (oilcoke) deposits. When the pressure system is properly designed and the lubricating oil is chosen according to the advice of the manufacturer, both the compressor and the pressure system should remain clean without any oil degradation thereby reducing the risk of fire. However, with pressure systems that allow the build-up of oil degradation deposits the quality and type of the lubricate is still more important as is also an inspection and a regular cleaning of the pressure system.

Some factors that affect coke formation are:

a) Excessive oil carry over.
b) Air filtration
Solids ingested with the suction air thicken the oil and delay its passage through the hot part of the delivery system, increase the time it is subject to oxidation and hence increase the rate of deposit formation.
c) Temperature
The temperature at which significant oxidation starts is related to the grade and type of oil used. Failure of valves can similarly raise the temperature and give dangerous conditions.

NOTE — In compressors with very high stage pressure ration "dieseling" can occur when the cooling is poor and the lubrication is rich. Such a cylinder "explosion" can under special circumstances propagate along the delivery pipe as a detonation.

Crankcase explosions

Explosions can occur in the crankcases of compressors.

Crankcase explosions result from ignition of a combustible mixture of lubricating oil and air. Combustion pressure which develops following ignition within the confined space frequently exceeds the strength of the crankcase and destructive failure occurs. The ignition source is generally an overheated part.

However, proper maintenance and operation are recommended as a means of minimizing mechanical failure. If a machine is shut down due to mechanical trouble which might involve an overheated part, inspection doors should not be opened immediately. This is to allow for a period of cooling of the heated part before air is permitted to enter the crankcase.

Incorrect operation or maintenance

Besides the types of potential hazards described above, hazards also exist if the compressor operation or maintenance work are not carried out in the correct way.

TROUBLE SHOOTING

Some problems that may develop and suggested checks with corrections are listed below:

INSUFFICIENT CAPACITY OR LOW PRESSURE

1. Check for air leaks in the system.
2. Loose or Slipping Belts.
3. Add up air consumption of all equipment on the system. If it exceeds the rated capacity of the compressor, an additional or larger compressor is needed.
4. Clean the suction filter.
5. Check the pressure gauge for accuracy — it may be reading low.
6. Check for defective valves — remove valves and check for broken valves or defective seats.
7. Unloading mechanism — check centrifugal unloader, or constant speed control unloader to determine if the compressor is partially unloaded.

INTERCOOLER POP VALVE BLOWING (Two Stage Compressors)

A. While running loaded:
Broken or defective high pressure suction or discharge valve
B. While running unloaded:
1. Low pressure unloader stuck in loaded position.
2. Broken or leaking high pressure discharge valve.

COMPRESSOR VIBRATES

1. Improper foundation.
2. Unit not properly secured to foundation.

3. Piping not supported properly.
4. Tank under stress because of improper shimming under the feet.

COMPRESSOR KNOCKS

1. Loose flywheel or pulley.
2. Crankshaft bearing clearance excessive.
3. Piston pin and bushing clearance excessive.
4. Main bearings loose.
5. Faulty unloader fork or Spring.
6. Motor rotor end play excessive.
7. Valve seat or backstop loose.

COMPRESSOR OVERHEATS

1. Intercooler blocked or dirty.
2. Discharge pressure too high — discharge line partially blocked.
3. Blown cylinder gasket between cylinders.
4. Valves partially open or broken.
5. Suction filter location improper.
6. Compressor in improper location.

MOTOR OVERLOADED OR BLOWS FUSES

1. Fuses too small.
2. Wrong electrical characteristics.
3. Low voltage.
4. Compressor not unloaded at start.
5. Excessive discharge pressure or restricted discharge line.
6. Unit cycling too rapidly — pressure switch differential tco close.
7. Defective motor.

RECEIVER SAFETY VALVE BLOWS

1. Pressure switch or unloader pilot is defective or set too high. Be sure pressure gauge is accurate.
2. Defective safety valve.

MAIN BEARING

The main bearings are of the tapered roller type and must be shimmed or adjusted for end play as follows:
.0005" to .002 for Models 40, 50, 80, 90, 93, 96, 79, 89 and 97
.0005" to .003 for Models 98 and 100
.002 to .004 for Models 200 and 260
.004 to .006 for Models 300

The following for Models 200, 260 and 300.
LOW OIL PRESSURE — OIL GAUGE POUNDS

1. Compressor running too slow.
2. Oil filter requires changing.
3. Oil strainer requires cleaning.
4. Worn rod bearings of shaft.
5. Worn pump or pump drive parts.

OIL PRESSURE GAUGE POUNDS

Normal pressure ..... 25 to 30#
Minimum pressure ..... 20#
Switch cutout pressure ..... 18#

OIL SWITCH

The oil pressure safety switch is set and tested at the factory for 18 pounds minimum oil pressure. If the oil pressure is below the set pressure for more than approximately one (1) minute the safety switch will cause the power to shut off and the compressor will stop. After correction of the cause for the low oil pressure emergency shut down, power can be restored for starting the compressor by the following procedure —

1. Push reset button on the pressure switch.
2. Push start button on starter.

ADJUST OIL PRESSURE

Stop compressor and turn off power. Drain oil from crankcase to drop oil level below side door opening. When facing flywheel, remove right hand side door from crankcase to expose closure screw in bearing plate No. CM-836.

Models 200, 200S, 260, 260H, 300, 300S, and 300H built thru 1982.
Remove closure screw —
No. CM-843 for models 200, 260 and 260 H
No. CM-924 for models 300 and 300H
Add Curtis-Toledo part #CM-1037-2, steel slug. Insert slug in opening, flat against end of spring VO-103 in position between spring and closure, tighten closure screw. Under normal conditions the addition of this slug will increase the oil pressure 4 to 5 pounds. Return side door, restore oil level in crankcase (check oil level) and start compressor. "Note Oil Pressure Gauge," if normal pressure of 25 to 30 pounds is not obtained by the above procedure contact factory service department.

Models 200, 200S, 260, 260H, 300, 300S and 300H in 1983 and after.
Follow the above instructions to expose closure screw. Note — 1/2" dia. hex hollow head adjusting set screw with lock nut in the closure screw, see drawing "A."

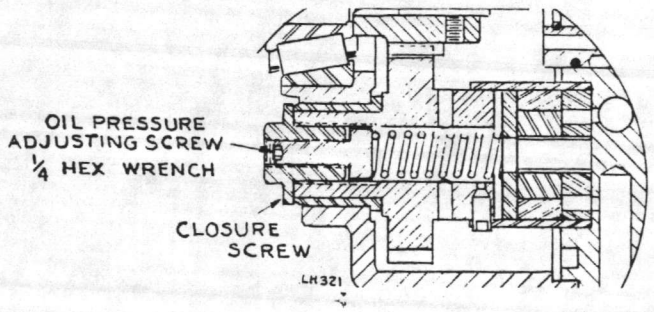

To adjust oil pressure.
Loosen lock nut.
To increase pressure — turn set screw to the right (tighten)
To lower pressure — turn set screw to the left (loosen)
Note — under normal conditions one full turn of the set screw will change the oil pressure approximately 4 pounds.
Hold set screw position and tighten lock nut. Return side door, restore oil level in crankcase (check oil level) and start compressor. "Note Oil Pressure Gauge" if normal pressure 25 to 30 pounds is not obtained by the above procedure contact factory service department.

PREVENTIVE MAINTENANCE

A good maintenance program will add years of service to your air compressor. The following is recommended as a minimum maintenance program. **TURN OFF POWER RED TAG BEFORE SERVICING.) Release to drain all pressure from system before starting to work on compressor or the air system.**

DAILY MAINTENANCE

1. Check for proper oil level and add oil as necessary.
2. Drain condensate from receiver unless it is equipped with an automatic tank drain, in which case the drain should be checked weekly to see that it is operating. See automatic tank drain instructions. CAP-144-A
3. Check for unusual noise or vibration (See "Trouble Shooting".) (Page 6)

For Models 200, 260 and 300

4. Check oil pressure (see page 7 for proper pressure).
5. Check air delivery over intercooler. (For loose or broken fan belt.)

WEEKLY MAINTENANCE

1. Clean the air filter. A clogged air filter can seriously affect the efficiency of the compressor and cause overheating and oil usage.
2. Clean all external parts of the compressor and driver. Be sure to clean the intercooler finned surface on two-stage compressors. A dirty compressor will cause abnormally high discharge temperature and resulting oil carbonization on internal valve components.
3. Check the safety valve manually (by pulling ring or lever) to see that it is not stuck.

MONTHLY MAINTENANCE

1. Inspect the entire air system for leaks.
2. Inspect condition of oil and change if necessary.
3. Check drive belt tension and tighten if needed.
4. The 200, 260 and 300 models have a fan belt. This must be checked and tightened as necessary.

EVERY 3 MONTHS or 1,000 HOURS of OPERATION

1. Change oil. (See separate instruction for 260H & 300H. See chart A).
2. Inspect valves. Clean the carbon from valves and head if necessary.
3. Check and tighten if necessary all bolts, nuts, etc.
4. Check unloader operation.
5. Check operation of lo-oil guard, compressors that are equipped with lo-oil guard.

EVERY 6 MONTHS or 2000 HOURS

For 260H and 300H

Every 6 months or 2000 hours of operation whichever comes first or when oil becomes contaminated due to dirty, dusty or high humidity conditions more frequent changes may be necessary. Note instructions for Oil Filter, Oil Strainer (Page 6).

For Models 200, 260, 300, 260H and 300H

OIL FILTER

Automotive type Fram F1 or A.C. PFZ is supplied with these models and should be changed after the first 1000 hours and every 1000 hours thereafter.

OIL STRAINER

Remove and clean thoroughly with each oil change or should the oil pressure gauge suddenly indicate lower than normal pressure (25 to 30 lbs.). To thoroughly clean this strainer it is necessary to flush briskly in clean mineral spirits and blow dry with clean dry compressed air. CAUTION, be sure the entire area of the wire mesh is clean and open.

FAN SHAFT BEARINGS

Grease once a year with a good grade lithium base electric motor ball bearing grease.

CHECKING BELT TENSION

To check the tension of the belts a Tensiometer is required, or proceed as follows. Measure the center distance between the center lines of the pulleys. Place a straight edge across the outside face of each belt. Apply a load to the belt at the center distance between the flywheel and the pulley.

Model	Belt Section	Force in Lbs.
40, 50, 80, 93, 96, 79	A	3
89, 97, 98	B	5
100	C	8
200, 260, 200S, 260H	4-C Bands	32
300, 300S, 300H	2-4-C Bands	32

The load applied should be as mentioned in the table above. The deflection of the belt from the straight edge should be no greater than .015 times the center distance. If the deflection does not meet this specification, the belts must be adjusted.

NOTE: To measure the tension and deflection of the banded belts a piece of metal must be placed across the four sections of belts and the force applied to the metal at the center line of the 4 "C" belt band.

To change tension, loosen the motor hold-down bolts and slide the motor on the base, using a lever if necessary, or on some models by turning the adjusting bolt at the end of the base.

Retighten motor hold-down bolts. **NOTE: Do not overtighten belts.**

To tighten the fan belt on the 200, 260, 300, 260H and 300H models, loosen fan shaft lock nut VH-1507 and tighten the adjusting screw CM-879. An "A" section belt to be correctly tensioned requires about 3# force to deflect .015 for each inch distance between pulley centers. After adjustment retighten lock nut. **NOTE: Do not overtighten.**

ELECTRIC MOTOR

Should be greased once a year with a good grade of lithium base ball bearing grease, or as directed by the motor manufacturer.

VALVE INSPECTION AND MAINTENANCE

SEE PARTS LIST FOR IDENTIFICATION OF VALVE PARTS

VALVE INSPECTION AND MAINTENANCE (for Models 80, 93, 96, 79, 97, 89, 98, 100, 200, 260 and 300)

Valves should be inspected at regular intervals as recommended under "Maintenance" Page 6 and cleaned or replaced when necessary. The valve can be serviced without disconnecting air piping or removing the head. **(Be sure the power to the motor is disconected and all pressure released before starting to work on the compressor.)**

On constant run models, it is necessary to remove the unloader piping before the valve plugs can be removed.

REMOVING VALVES

To remove the suction or discharge valves, it is necessary to unscrew the cap nut (some low pressure suction valves may not have a cap nut, set screw or copper gasket), loosen the set screw with an Allen wrench, and remove the valve plug with a large wrench. The hold-down sleeve and cap can then be removed. The valve assembly can now be lifted out.

The Model 89, 97, 98, 100, 200, 260 and 300 compressor have valve cover plates. First remove the cap nuts and copper washers, then loosen the set screws with an Allen wrench. Remove the cap screws holding the cover plates; the cover plate can be lifted off. The valve assemblies can now be lifted out of the valve cavities.

CLEANING VALVES

All valve parts should be thoroughly cleaned with solvent or brushed to remove carbon and other deposits. If seats or valve discs are damaged, they should be relapped or replaced. Springs should be replaced if they show signs of wear. If there are any carbon deposits in the head cavities, they should be thoroughly cleaned.

New locking nuts on the valve should be used when possible, otherwise reshape the spring finger of the nuts with the properly shaped tool to close the fingers inward. The reshaped nuts should have a tight fit on the screw threads so they will not come loose in operation.

USE ONLY SPS FLEX LOC SELF-LOCKING NUTS; THESE CAN BE PURCHASED FROM CURTIS—TOLEDO OR FROM A LOCAL DISTRIBUTOR.

The locking nuts should be torqued when they are replaced:

10-32 nut — toruqe 80 in. lbs. (Models C93)
1/4-28 nut — torque 180 in. lbs. (Models 79, 80, 89, C93, E97)
5/16-24 nut — torque 250 in. lbs. (Model 79)
3/8 - 24 nut — torque 400 in. lbs. (Models 89, E97)
*7/16-20 nut — torque 300 in. lbs. (Models D97, 98, 100)
1/2 - 20 nut — torque 50 ft. lbs. (Models 200, 260, 300)
*Castellated nut with cotter pin.

TO INSTALL VALVES

It is just as important that the seal between the valve assembly and the head be as tight as the valve disc is tight on the seat. Be sure the seats are clean and free of carbon.

The Model 79, 89, C93, E97, 200, 260 and 300 have a copper washer under the valve assemblies. These washers should be cleaned or replaced. Before installing the valve assemblies: **Put the discharge valve in the discharge cavity and the suction valve in the suction cavity.** Valve holddown sleeve should be placed in the proper cavities; if the valve has sleeve caps, install in position. Use new gaskets for valve cover or valve plug. Tighten the valve plug or the cover cap screws. (Be sure the set screws have been backed off before bolting down) On units with cover plates, tighten the cap screws evenly so that the cover plate exerts equal force on the gasket. Install the hold down set screws and tighten with set screw wrench. On cover plate, be sure to tighten evenly to exert equal force on the holddown sleeves. Place the copper washer over the one or more setscrews, and screw the stud nut down tight.

VALVE INSPECTION AND MAINTENANCE (for Models 40, 50 & 90)

Valves should be inspected at regular intervals as recommended under "Maintenance" Page 6 and cleaned or replaced when necessary. Be sure the power to the motor is disconnected and all pressure released before starting to work on the compressor and air system.

All valves are attached to the valve plate. If the compressor is equipped with a centrifugal unloader, disconnect the cam assembly from the unloader lever, remove the head cap screws and the head, then the valve plate may be removed. If the compressor is equipped with constant speed control unloader, disconnect the tubing from the cyli. der assembly and unscrew and remove the unloader diaphragm body before removing the head. (See parts list for identification of parts.)

CLEANING VALVES

If the valves need cleaning remove them from the valve plate and thoroughly clean them with solvent or brush to remove carbon and other deposits. If there are any carbon deposits in the head cavities they should be thoroughly cleaned.

TO INSTALL VALVES

Be sure that the valve springs are properly seated in the retainers and the valve discs free to operate.

Tighten the retainer bar screws on the discharge valves and the locknuts on the suction valves to hold the discharge valve retainers and suction valve guides securely in place. When replacing the constant speed control unloader cylinder assembly, be sure the fork fits through holes in the valve plate and that spring and unloader pin are in place.

UNLOADING MECHANISM

AUTOMATIC START-STOP CONTROL OR PRESSURE SWITCH OPERATION (Standard for Models 40, 50, 79, 80, 89, 93, 96, 97 & 98)

A compressor equipped for start-stop (pressure switch) operation has a centrifugal unloading mechanism or a solenoid valve piloted suction valve unloader to provide an automatic unloaded start. This serves to prevent the compressor from starting against discharge line pressure. The various methods are as follows:

Centrifugal Flywheel Mechanism, Used with Dash-Pot Unloading Cam in Head or with Bleeder Valve Unloading

The flywheel mechanism consists of spring loaded weights guided within the flywheel and linked to a collar around the flywheel hub. When the flywheel rotates, the weights are drawn outward against the springs and pull the collar away from the compressor. As the flywheel stops, the springs return the weights and collar against a lever mounted to the compressor which actuates the compressor unloading mechanism as follows:

Dash-Pot Type Unloading Mechanism (for Models 40, 50, 80, 90, & 96)

The lever actuated by the centrifugal flywheel mechanism is linked to a cam located on top of the head, and has restricted motion because of the dash-pot. The cam actuates an unloader pin which opens or closes a by-pass valve or suction valve in the head, thus controlling compression in the cylinders. The dash-pot serves as a time-delay device to permit the compressor to reach operating speed before compression starts. **Never oil the dash-pot piston as this will interfere with its proper functioning.** Other parts of the mechanism should be oiled occasionally.

Bleeder Valve Type Unloading (for Models 79, 93 and 96)

The lever actuated by the centrifugal flywheel mechanism directly depresses the valve stem of a bleeder valve located in the front end plate. This valve is open when the compressor is stopped, and bleeds all pressure from the compressor, thus preparing it for the next unloaded start. To clean or replace the valve, remove the lever and unscrew the valve. Occasionally oil all moving parts of the flywheel and unloader mechanism.

SOLENOID VALVE PILOTED SUCTION VALVE UNLOADING (for Models 89, 97, & 98)

These models are provided with air pressure actuated suction valve unloaders such that when air pressure is supplied to the unloader the suction valve is held open, and the compressor cannot pump even though running. (For a description of the piston type or diaphragm type unloaders used with these units, see "Constant Speed Control".) To provide automatic start-stop operation with an unloaded start on these models, a 3-way solenoid valve with a restricted exhaust and a pressure switch are used to achieve the following sequence of operation. If the compressor is shut down or stops because the pressure switch opens, the solenoid valve is de-energized permitting air pressure from the receiver to act on the unloaders. This unloads the compressor. When the compressor is started again or the pressure switch closes, the solenoid valve is energized which permits air from the unloader to exhaust through the restrictor plug. The restrictor plug delays the loading action of the compressor until it has reached operating speed.

CONSTANT SPEED CONTROL (CONSTANT RUN CONTROL) (Standard on Models 100, 200, 260 & 300; Optional for Other Models) SEE CAP-167

A compressor unit set up to run continuously has an unloading mechanism to stop the pumping action of the compressor at a predetermined cut-out pressure and start the pumping action at some lower pre-determined cut-in pressure. This unloading cycle is accomplished by one of the following ways. On single stage and some two stage compressors, the suction valves are held open during the unloading cycle. On some two stage compressors, the low stage suction valve is held open while a by-pass valve unloads the high stage during the unloaded cycle. These methods employ air pressure from the discharge line or receiver to actuate unloader pistons or unloader diaphragms which actuate the unloading mechanism. Control of the air pressure to and from the unloaders is accomplished by either an air pressure actuated pilot valve or by a three-way solenoid valve controlled by a pressure switch.

CONSTANT SPEED CONTROL WITH DIAPHRAGM UNLOADERS (For Models 40, 50, 80, D-93, 96, C-97, D-97, 98, & 100)

These unloader diaphragm assemblies are factory adjusted for 1/16" automatic take-up to compensate for any wear that might occur through continued use in unloader parts. To check automatic take-up setting, remove cap, diaphragm, and spring from diaphragm assembly. Press down lightly on top of piston using one finger until piston has moved as far as it will go without using strong pressure. CAUTION: DO NOT PRESS HARD ENOUGH TO COMPRESS THE SPRING LOCATED INSIDE THE PISTON. With piston in this position, its top should be 1/16" above the top of body. If the above measurement is 1/64" or less, a new pin should be installed. The end of the pin must be filed when installing in order to obtain the 1/16" dimension mentioned above.

Diaphram unloaders built in mid 1984 are designed with threaded shank on body and lock nut for adjusting to obtain the 1/16" dimension required without change or filing the unloader pin. Follow the above instructions for measuring the piston top and adjust by screwing the body in or out to obtain the required 1/16" dimension, hold position and tighten lock nut. Apply thread sealer to threaded shank to prevent air leak from high pressure side.

CONSTANT SPEED CONTROL WITH PISTON TYPE UNLOADERS (For Models 79, 90, 89 & E-97)

If the piston unloader becomes sticky or jerky in operation, remove the unloader cylinder and piston assembly. Remove all dirt or carbon and lubricate the piston and cylinder with a high temperature bearing grease before re-assembly and installation.

CONSTANT SPEED CONTROLS WITH PISTON TYPE UNLOADERS (For Models 200, 260 & 300)

The unloaders are of "O" Ring and piston type with

pressure and overtravel compensating spring. This in turn contacts the valve which has a built in unloader fork and return spring.

To check to see if unloader is stuck open or closed the action can be viewed on the low pressure cylinders by removing air inlet filter and elbow and watching the operation thru the inlet opening.

UNLOADING MECHANISM

The pipe plug in the top of the unloader cap CM-866 can be removed and a 1/4" dia. rod inserted through the hole and hand pressure can be used to see if there is movement of the unloader piston. For further inspection the cap CM-866 must be removed, then all unloader parts can be taken thru this opening.

CONSTANT SPEED CONTROL — PILOT VALVE (Standard for Models 100, 200, 260 & 300; Optional for All Other Models)

The pilot valve supplied with some compressor units is a spring loaded ball and seat type. When air receiver pressure reaches the pre-set (adjustable) cut-out pressure, the ball is unseated permitting air pressure to actuate the unloaders. When the air receiver pressure drops to the cut-in pressure, the ball reseats and relieves the pressure acting on the unloaders permitting the compressor to pump again. These valves have a manual override device consisting of a screw or cam located at the exposed end of the stem which forces the stem outward. This permits manual unloading and reloading of the compressor unit. Should these valves become faulty in operation, they may require disassembly and cleaning (especially the filter). After reassembly, the pressure settings (cut-out and cut-in) must be readjusted. See CAP-124 for additional information.

COMPRESSOR MODELS & CHARACTERISTICS TEST.

CHART A

MODEL NO.	H.P.	R.P.M. MIN.	R.P.M. MAX.	OIL REQUIRED	INTAKE PIPE SIZE	INTAKE PIPE SIZE (if over 50 ft.)	DISCHARGE PIPE SIZE
SINGLE STAGE							
40	3/4-1	400	800	1-1/4 Pints	3/4"	1"	3/4"
50	1/2-2	400	800	3 Pints	3/4"	1"	3/4"
80	3-5	400	750	4 Pints	1"	1-1/4"	1"
TWO STAGE							
90	1-1/2-2	400	850	3 Pints	3/4"	1"	3/4"
93	3	400	900	3 Pints	1"	1-1/4"	1"
96	5	400	800	4 Pints	1"	1-1/4"	1"
79	7-1/2	400	900	4 Pints	1-1/4"	1-1/2"	1"
97	10	400	800	5 Pints	1-1/4"	1-1/2"	1-1/4"
89	15	600	950	5 Pints	1-1/2"	2"	1-1/2"
98	20 & 25	400	950	6 Quarts	2"	2-1/2"	2"
100 100S	30 & 40	500	850	4 Gal.	two 2"	two 2-1/2"	2-1/2"
200 200S	50	600	950	4-1/2 Gal.	two 2-1/2"	two 3"	2-1/2"
260	60						
260H	50 & 60	600	835				
300 300S	75 100 125	550	950	6 Gal.	two 3"	two 4"	4" A.S.A. Flange
300H	100&125	550	835				3" A.S.A. Flange

	HEAD BOLTS			CYLINDER TO CRANKCASE			CONNECTING ROD			INTERCOOLER			SIDE DOOR			END PLATE			VALVE COVER PLATE		
	SIZE BOLT	TORQUE		SIZE BOLT	TORQUE		SIZE BOLT	TORQUE		SIZE BOLT	TORQUE		SIZE BOLT	TORQUE		SIZE BOLT	TORQUE		SIZE BOLT	TORQUE	
		FT #	IN #		FT #	IN #		FT #	IN #		FT #	IN #		FT #	IN #		FT #	IN #		FT #	IN #
C-100	3/4"-10	160	1920	3/4"-10	140	1700	5/8"-18	110	1320	5/8"-11 1/2"-13	80 37	960 444	5/16"-18	7	84	1/2"-13	37	444	1/2"-13 3/8"-16	33 20	396 240
C-98	5/8"-11	140	1680	3/4"-10	140	1700	1/2"-20	71	850	5/8"-11	80	960	3/8"-16	13	156	1/2"-13	37	444	1/2"-13 3/8"-16	33 20	396 240
C-97, D-97, 89	5/8"-11	120	1440	5/8"-11	80	960	1/2"-20 3/8"-24	71 28	850 336	1/2"-13	37	444	3/8"-16	13	156	3/8"-16	15	180	1/2"-13 3/8"-16	33 20	396 240
C96, 79 D-96	3/8"-16	25	300	7/16"-14	36	232	3/8"-24	28	336	—	—	—	5/16"-18	7	84	3/8"-16	15	180	—	—	—
C-90 C-50	3/8"-16 5/16"-18	25 20	300 240	5/16"-24	20	240	5/16"-24	19	228	—	—	—	—	—	—	5/16"-18	20	240	—	—	—
C-80	7/16"-14	24	288	7/16"-14	24	288	3/8"-24	28	336	—	—	—	5/16"-18	7	84	3/16"-16	15	180	—	—	—
C-40, 15	3/8"-16	25	300	3/8"-16	15	180	5/16"-24	19	228	—	—	—	—	—	—	3/8"-16 1/4"-20	15 7	180 84	—	—	
C-93 D-93	3/8"-16	25	300	5/16"-18	20	240	5/16"-24	19	228	—	—	—	5/16"-18	7	84	5/16"-18	20	240	—	—	—
C200	5/8"-11	120	1440	3/4"-10	140	1700	1/2"-20	65	780	5/8"-11 1/2"-13	80 37	960 444	5/16"-18	7	84	1/2"-13	37	444	1/2"-13 3/8"-16	33 20	396 240
C300	5/8"-11	120	1440	3/4"-10	140	1700	1/2"-20	65	780	3/4"-10 1/2"-13	140 37	1700 444	5/16"-18	7	84	1/2"-13	37	444	1/2"-13 3/8"-16	33 20	396 240

BOLT TORQUE FOR COMPRESSORS

CURTIS MFG. CO.
ST. LOUIS, MO. U.S.A.

12/9/77

A-CA-148

COMPRESSOR PUMP-UP TIME

TWO STAGE

H.P. Size	Compressor Model No.	R.P.M.	Piston Displ. CFM	Tank Size		Approx. Time Required To Pump From:	
				Size (In)	Gal.	0 to 175 PSIG Min. – Sec.	145 – 175 PSIC Min. – Sec.
1	CV, CQ905A	400	4.6	20 x 50	60	25' – 49"	4' – 40"
1-1/2	CV, CQ906	595	6.9	20 x 50	60	17' – 33"	3' – 8"
1-1/2	CV906A	595	6.9	20 x 66	80	23' – 36"	4' – 12"
1-1/2	CQ906A	595	6.9	24 x 48	80	23' – 36"	4' – 12"
2	CV, CQ907	820	9.6	20 x 50	60	12' – 53"	2' – 16"
2	CV907A	820	9.6	20 x 66	80	17' – 18"	3' – 2"
2	CQ907A	820	9.6	24 x 48	80	17' – 18"	3' – 2"
3	CV, CQ938	810	14.5	20 x 50	60	8' – 19"	1' – 28"
3	CV938A	810	14.5	20 x 66	80	11' – 12"	1' – 58"
3	CQ938A	810	14.5	24 x 48	80	11' – 12"	1' – 58"
5	CV969A	755	24.3	20 x 66	80	6' – 55"	1' – 14"
5	CQ969A	755	24.3	24 x 48	80	6' – 55"	1' – 14"
5	CV969B	755	24.3	24 x 70	120	10' – 13"	1' – 50"
5	CQ969B	755	24.3	30 x 47	120	10' – 13"	1' – 50"
7-1/2	CV7910	885	35.2	20 x 66	80	4' – 40"	0' – 49"
7-1/2	CV7910A	885	35.2	24 x 70	120	6' – 55"	1' – 13"
7-1/2	CQ7910A	885	35.2	30 x 47	120	6' – 55"	1' – 13"
10	CV9711	675	45.0	20 x 66	80	3' – 32"	0' – 37"
10	CV9711A	675	45.0	24 x 70	120	5' – 13"	0' – 55"
10	CQ9711A	675	45.0	30 x 47	120	5' – 13"	0' – 55"
15	CV8912	860	71.7	24 x 70	120	3' – 30"	0' – 37"
15	CV8912B	860	71.7	30 x 87	240	6' – 56"	1' – 13"
20	CV9813	720	92.1	24 x 70	120	2' – 37"	0' – 28"
20	CV9813B	720	92.1	30 x 87	240	5' – 12"	0' – 56"
25	CV9814B	935	120.0	30 x 87	240	4' – 8"	0' – 44"

SINGLE STAGE

H.P. Size	Compressor Model No.	R.P.M.	Piston Displ. CFM	Tank Size		Operating Pressure PSIG	Approx. Time Required To Pump From:	
				Size (in)	Gal.		0 to Cut-out Min. – Sec.	Cut-in to Cut-out Min. – Sec.
3/4	CVL, CQL404	630	5.8	16 x 41	30	60 – 80	4' – 49"	1' – 19"
3/4	CVM, CQM404	580	5.3	16 x 41	30	80 – 100	6' – 47"	1' – 30"
3/4	CVH, CQH404	475	4.4	16 x 41	30	120 – 150	13' – 7"	3' – 4"
1	CVL, CQL405	800	7.4	16 x 41	30	60 – 80	4' – 0"	1' – 6"
1	CVL, CQL405A	800	7.4	20 x 50	60	60 – 80	7' – 54"	2' – 12"
1	CVM, CQM405	720	6.6	16 x 41	30	80 – 100	5' – 34"	1' – 14"
1	CVM, CQM405A	720	6.6	20 x 50	60	80 – 100	11' – 0"	2' – 30"
1	CVH, CQH405	575	5.3	16 x 41	30	120 – 150	11' – 3"	2' – 31"
1	CVH, CQH405A	575	5.3	20 x 50	60	120 – 150	21' – 51"	5' – 4"
1-1/2	CVL506	555	10.2	16 x 41	30	60 – 80	2' – 43"	0' – 45"
1-1/2	CVL506A, CQL506	555	10.2	20 x 50	60	60 – 80	5' – 24"	1' – 30"
1-1/2	CVM506	490	9.0	16 x 41	30	80 – 100	3' – 57"	0' – 54"
1-1/2	CVM506A, CQM506	490	9.0	20 x 50	60	80 – 100	7' – 49"	1' – 48"
1-1/2	CVH506	450	8.3	16 x 41	30	120 – 150	7' – 1"	1' – 41"
1-1/2	CVH506A, CQH506	450	8.3	20 x 50	60	120 – 150	13' – 53"	3' – 21"
2	CVL, CQL507	750	13.8	20 x 50	60	60 – 80	4' – 3"	1' – 7"
2	CVM, CQM507	690	12.7	20 x 50	60	80 – 100	5' – 24"	1' – 18"
2	CVH, CQH507	610	11.2	20 x 50	60	120 – 150	10' – 21"	2' – 31"
3	CVL808	540	19.6	20 x 50	60	60 – 80	2' – 42"	0' – 44"
3	CVL808A	540	19.6	20 x 66	80	60 – 80	3' – 35"	0' – 59"
3	CQL808A	540	19.6	24 x 48	80	60 – 80	3' – 35"	0' – 59"
3	CVM808	500	18.1	20 x 50	60	80 – 100	3' – 47"	0' – 50"
3	CVM808A	500	18.1	20 x 66	80	80 – 100	5' – 5"	1' – 6"
3	CQM808A	500	18.1	24 x 48	80	80 – 100	5' – 5"	1' – 6"
3	CVH808	430	15.6	20 x 50	60	120 – 150	7' – 1"	1' – 36"
3	CVH808A	430	15.6	20 x 66	80	120 – 150	9' – 28"	2' – 8"
3	CQH808A	430	15.6	24 x 48	80	120 – 150	9' – 28"	2' – 8"
5	CVL809	710	25.7	20 x 50	60	60 – 80	2' – 3"	0' – 33"
5	CVL809A	710	25.7	20 x 66	80	60 – 80	2' – 43"	0' – 45"
5	CQL809A	710	25.7	24 x 48	80	60 – 80	2' – 43"	0' – 45"
5	CVM809	710	25.7	20 x 50	60	80 – 100	2' – 37"	0' – 35"
5	CVM809A	710	25.7	20 x 66	80	80 – 100	3' – 32"	0' – 47"
5	CQM809A	710	25.7	24 x 48	80	80 – 100	3' – 32"	0' – 47"
5	CVH809	690	25.0	20 x 50	60	120 – 150	4' – 17"	0' – 59"
5	CVH809A	690	25.0	20 x 66	80	120 – 150	5' – 46"	1' – 19"
5	CQH809A	690	25.0	24 x 48	80	120 – 150	5' – 46"	1' – 19"

CURTIS COMPRESSOR DIVISION
CURTIS-TOLEDO, INC.
1905 Kienlen Avenue, St. Louis, Missouri 63133
Telephone (314) 383-1300, Telex 44-7610
Sales representatives in principal cities

Honeywell

Comfort Control Systems

COMPRESSED AIR DRYERS (HANKISON)

Service Data

GENERAL

DESCRIPTION

The Hankison Compressed Air Dryers remove dirt, moisture, and oil from the air and provides clean, dry air to the control system.

APPLICATION

Compressed Air Dryers are needed in all pneumatic systems and are sized to the air consumption of the system. The unit is positioned between the compressor and the controlled devices (Fig. 1) on the high pressure (upstream) side of the pressure reducing valve.

SPECIFICATIONS

MODELS: See Table 1.
FLOW CAPACITY: See Table 1.

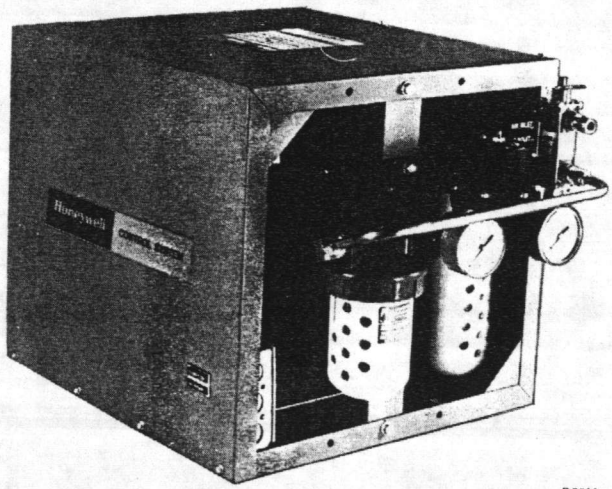

R2711

MAXIMUM INLET COMPRESSED AIR TEMPERATURE: 120 F (49 C).
MAXIMUM AMBIENT TEMPERATURE: 110 F (43 C).
ELECTRICAL: 115/208/230V ac, 60 Hz; all single phase.

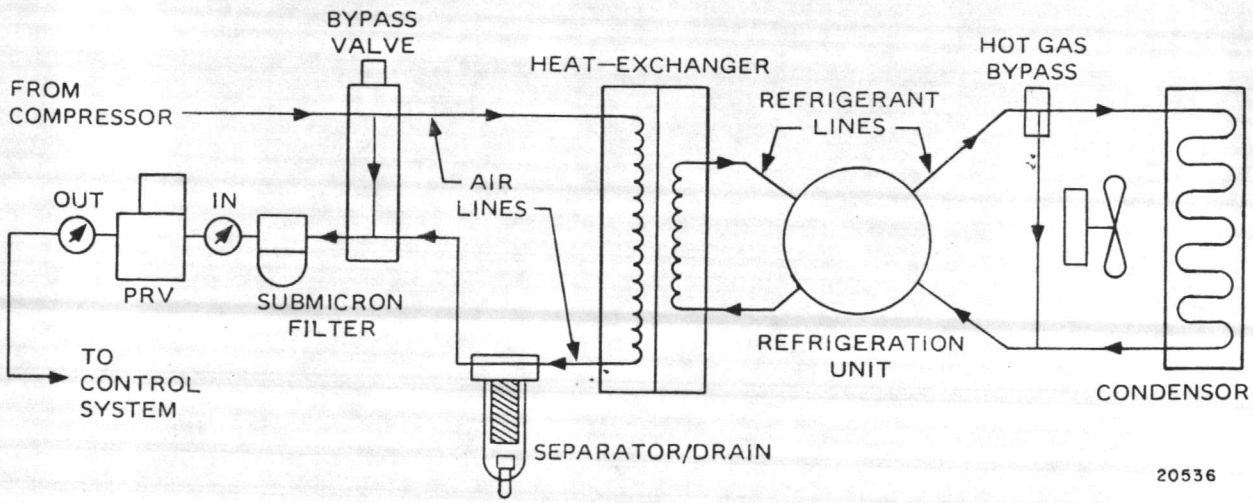

Fig. 1. Compressed Air Dryers—Typical Operation.

Form No. 85-0086
Commercial Bldg Group
MLF TAB: II. C. 9.

Table 1. Compressed Air Treatment Unit Model Numbers and Flow Capacity.

Model Number	Former Model Number	Maximum Flow SCFM (l/s) ⚠1
HKN8010	AK3480, HKNE10	10 (4.7) ⚠2
HKN8015	AK3479, AK3481, HKNE15	15 (7.1)
—	AK3476	20 (9.4)
HKN8025	AK3482, HKNE20	25 (11.8)
HKN8035		35 (16.5)
HKN8045		45 (21.2)
HKN8055		55 (26)
HKN8070		70 (33)
HKN80100		100 (47.2)
HKN8210		10 (4.7)

NOTES:

⚠1 Flow capacity is rated with inlet pressure at 100 psi (689 kPa), inlet temperature at 100 F (38 C), and an ambient temperature of 100 F (38 C). At inlet pressures above 100 psi (689 kPa) or inlet temperatures below 100 F (38 C), the dryer can handle more than the rated flow capacity. The reverse is true for lower inlet pressure or higher inlet temperatures.

⚠2 With the PP902A or B Pressure Reducing Valve, these models have a rating of 3 ft^3/m (1.4 l/s).

3. Models with an EX suffix are exported units for international use. Models with an H suffix are specifically with end screen to meet Los Angeles code. Models with a D suffix are adjusted for high altitude.

HKN8045 to HKN80100:
Standard dryer: 20 to 175 psi (138 to 1207 kPa).
Units with high pressure trap: 20 to 300 psi (138 to 2068 kPa).

MAX INLET AIR TEMPERATURE: 120 F (49 C).

NOMINAL PRESSURE DROP AT RATED FLOW:

HKN8010—2.5 psi (17 kPa)
HKN8210—2.5 psi (17 kPa)
HKN8015—3.0 psi (21 kPa)
HKN8025—2.0 psi (14 kPa)
HKN8030—4.5 psi (31 kPa)
HKN8045—2.0 psi (14 kPa)
HKN8055—2.0 psi (14 kPa)
HKN8070—2.5 psi (17 kPa)
HKN80100—4.0 psi (28 kPa)

COMPRESSOR SIZE IN HORSEPOWER:

HKN8010 & HKN8210: 1/6
HKN8015: 1/5
HKN8025 & HKN8035: 1/3
HKN8045 & HKN8055: 1/2
HKN8070 & HKN80100: 3/4

OPERATION

The Compressed Air Dryer removes moisture from the compressed air by lowering the air temperature, which reduces the ability of the air to hold water. Water condensed from the air is removed by mechanical/coalescing action in the dryer separator, then discharged from the system by an automatic drain. Contaminants in the compressed air are partially removed by an in-depth type filter in the separator, then final filtered by the high-efficiency coalescing filter. The coalescing filter also collects oil aerosols and removes the oil through a manual drain.

The pressure reducing valve reduces the clean, dry compressed air pressure to the rest of the system. In two-pressure control systems (day-night or summer-winter), the pressure reducing valve furnishes either of two control pressures. Switchover from one pressure to the other is from an external two-position pneumatic or electric signal.

MAINTENANCE

CAUTION

Never depressurize a pneumatic control system without realizing the consequences of returning all actuators and relays to their normal positions. If a dryer bypass valve has not been installed in the system, study drawings before shutting off air compressor or valving off the air supply.

CAUTION

Do not tamper with refrigeration section of the units. All settings are made at the factory.

CLEANING

CAUTION

Certain oils, chemicals, household cleaners, paints, and fumes will attack polycarbonate plastic bowls of the filter station and separator/drain. This can cause bowl failure. Do not use these materials as listed below:

Chemical and Solvent Resistance Table for Polycarbonate Bowls

LIMITED RESISTANCE:

Cyclohexanol	Hydrochloric Acid (Conc.)	Nitric Acid (Conc.)
Gasoline (High Aromatic)	Milk of Lime (CaOH)	Sulfuric Acid (Conc.)

NOT RESISTANT:

Acetaldehyde	Caustic Potash Solution (5%)	Nitrocellulose Lacquer
Acetic Acid (Conc.)	Caustic Soda Solution (5%)	Phenol
Acetone	Chlorobenzene	Phosphorous Hydroxy Chloride
Acrylonitrile	Cyclo Hexanone	Phosphorous Trichloride
Ammonium Fluoride	Cyclohexene	Propionic Acid
Ammonium Sulfide	Dimethyl Formamide	Sodium Sulfide
Benzene	Ethane Tetrachloride	Styrene
Benzoic Acid	Ethylamine	Sulfuryl Chloride
Benzyl Alcohol	Ethyl Ether	Tetra Hydronaphthalene
Bromobenzene	Ethylene Chlorohydrin	Thiophene
Butyric Acid	Formic Acid (Conc.)	Toluene
Carbon Tetrachloride	Freon (Refrigerant & Propellant)*	Xylene
Carbon Disulfide	Nitrobenzene	Synthetic Compressor Lubricants**
Carbolic Acid		

DISSOLVED BY:

Chloroform	Dioxane	Methylene Chloride
Cresol	Ethylene Dichloride	Pyridine

*DuPont Trademark.

*Phosphate ester lubricants; where compressor lubricants other than normal mineral base lubricants are used, contact lubricant manufacturer.

Chemical and Solvent Resistance Table for Separator/Drain Cartridge End Caps (Mineral Filled Nylon)

RESISTANT:

Inert to most organic chemicals such as esters, ketones, alcohols, and hydrocarbons. Resists alkalis and salt solutions.

LIMITED RESISTANCE:

Benzyl Alcohol	Citric Acid	Oxalic Acid
Benzaldehyde	Mercuric Chloride	Potassium Bichromate
Benzoic Acid	Methylene Chloride	

NOT RESISTANT:

Attacked by strong mineral acids and strong oxidizing agents. The following listed materials result in decomposition, and/or swelling, and/or loss of strength, etc.

Aniline	Chromic Acid	Hydrochloric Acid (10%)
Benzene-Sulphonic Acid	Cresols	Nitric Acid (10%)
Boron Trifluoride	Ethylene Chlorhydrin	Phenol
Bromine	Ethylene Glycol	Phosphoric Acid (25%)
Chloracetic Acid	Fluorine	Potassium Permanganate
Chloral Hydrate	Formic Acid	Resorcinol
Chlorine	Glacial Acetic Acid	Sulfuric Acid (10%)
Chloroform	Glycol	Xylenol
Chlorosulfonic Acid	Hydrobromic Acid	

REFRIGERATION CONDENSER

The refrigeration condenser should be kept clean and clear of dirt to allow free passage of air. Use a soft cloth or brush. The condenser may be blown off with compressed air or if heavily contaminated, washed off with mild detergent and water. In particularly dirty areas, a furnace-type filter pad installed in front of the refrigeration condenser is recommended.

SEPARATOR/DRAIN

Filter sleeve replacement is recommended if pressure drop across the unit exceeds 10 psi (69 kPa). See REPAIR section for this procedure.

The separator/drain normally requires no maintenance, but can be *blown down* manually. To *blow down* the separator/drain:

1. Remove the metal clamp and tubing from the knurled fitting (Fig. 2).
2. Turn the knurled fitting clockwise to open (blow down), then turn counterclockwise to close.

CAUTION

Precautions should be exercised so that the pressure in the housing is not quickly reduced so as to avoid filter sleeve damage.

3. Reattach metal clamp and tubing.

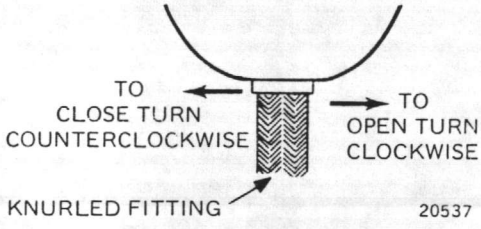

Fig. 2. Separator/Drain.

POLYCARBONATE BOWLS

Polycarbonate bowls must be cleaned with a mild household detergent. Care should be taken to avoid exposure of polycarbonate bowls to the chemicals listed previously. Those chemicals may be present in the compressed air system, in the ambient air surrounding the bowl, or in cleaning solvents.

SUBMICRON FILTER

During operation the filter cartridge reaches equilibrium. That is, the amount of liquid contained in the influent air equals the amount of liquid being permanently removed from the air. The filter cartridge at equilibrium is said to be saturated. At rated flow conditions, equilibrium pressure drop will normally be in the range of 3 to 4 psi (21 to 28 kPa) for light liquid loading, 4 to 5 psi (28 to 34 kPa) for moderate loading, and 5 to 6 psi (34 to 41 kPa) for heavy loading. Further pressure drop will occur only as the cartridge becomes contaminated with solid particles. It is recommend that the filter cartridge be replaced for maximum filtration efficiency if pressure drop exceeds 10 psi (69 kPa).

When flow is interrupted for several hours, the pressure drop may temporarily increase upon the resumption of flow. Normally, within one hour, the pressure drop should return to a value approaching the pressure drop prior to stopping the flow. This phenomenon is not cause for filter cartridge replacement. It is due to residual liquids contained within the cartridge *pooling* and a change in the vicosity of these liquids due to a temporary temperature change.

During operation, the outer foam cover will show evidence of liquid discoloration on a band on the lower portion of the foam cover. This is normal. Spotting above the band indicates that the foam is accumulating liquids faster than it can be drained and that an excessive amount of liquid is present in the incoming air. Refer to REPAIR section for instructions on filter cartridge replacement.

OPERATIONAL CHECK

1. Red and green indicator lights are provided. The green light will be on when the unit has electric power. The red light is a high temperature warning light and is activated by a thermostatic switch. When the red light is on, the temperature of the air leaving the cooling coil is higher than normal. Both the red and green light come on when the unit is first connected to power. When the air is cooled down satisfactorily, the red light will go off, usually in less than 15 minutes. Under some conditions the warning light may not go off until compressed air is flowing through the unit.
2. Under normal conditions, removal of moisture from the compressed air begins immediately. After several hours of operation, some sign of condensate discharge should be visible.

TROUBLESHOOTING

For troubleshooting the compressed air dryers refer to Table 2.

Table 2. Compressed Air Dryer Troubleshooting Chart.

1. Generally the cause. 2. Occasionally the cause. Check after the No. 1 causes are checked. 3. Possibly the cause. Check after the No. 1 and 2 causes are checked.	Power failure, blown fuse, circuit breaker.	Faulty wiring or loose terminals.	Low voltage.	High voltage.	Defective contacts in contactor.	Defective compressor relay.	Defective compressor overload.	Defective compressor unit.	Condenser fins dirty or plugged.	Defective fan switch.	Defective fan motor.	Fan blade hitting guard.	Unit overloaded, excessive air flow.	Ambient temperature too low.	Ambient temperature too high.	Direct electrical short.	Defective temperature sensor.
Compressor and condenser fan motor will not start.	1	1	2		2			2									
Compressor will not start but condenser fan will run.		1				1		2									
Condenser fan motor will not start.		1								1	1	3					
Compressor hums but will not start.		1	2		3	1											
Compressor cycles on overload.			1				1	2	1	1	1		2		1		
Compressor short cycles.								1			3			2			
Compressor runs continuously, no cooling.								1	2				3		3		
Compressor noisy.								2									
Suction line frosting.								1		2							
High temperature warning light stays on.									2				1		1		2
Unit pulling excessive current.			3						1				2		2		
Electrical components continue to fail (relays, overload, etc).			1	1												2	

REPAIR

CAUTION

The refrigeration section is not field repairable. Return to factory for repair.

EQUIPMENT REQUIRED

No special equipment is required.

SEPARATOR/DRAIN

AUTOMATIC DRAIN MECHANISM

1. Isolate the Dryer from system by opening bypass valve (if one is installed) and closing inlet and outlet valves.
2. Depressurize Dryer by manually blowing down separator/drain (see MAINTENANCE section).
3. Unscrew the metal collar holding the separator/drain bowl to the head and remove bowl and collar.
4. Remove old drain mechanism by turning the knurled fitting and removing it from the bottom (Fig. 2).
5. Install new drain mechanism.
6. Attach bowl and collar to filter head and metal clamp and tubing to knurled fitting.
7. After making sure that the manual drain is closed, pressurize unit by slowly opening inlet valve, then opening outlet valve, and finally closing bypass valve.

FILTER SLEEVE REPLACEMENT

It is recommended that the filter sleeve be replaced for maximum filtration efficiency if pressure drop exceeds 10 psi (69 kPa).

1. Isolate the Dryer from system by opening bypass valve (if one is installed) and closing inlet and outlet valves.
2. Depressurize the separator/drain by slowly opening manual drain. If unit is equipped with an automatic drain, it can be manually opened by turning the knurled fitting as shown in Figure 2.
3. Unscrew the metal collar holding the bowl to the filter head and remove bowl and collar.
4. Clean the bowl (see MAINTENANCE section).
5. Remove wing nut and bottom cap (Fig. 3).
6. Slide filter sleeve (disposable) down over separator core.

7. If necessary, unscrew separator core from filter head and clean with soap and water. When attaching separator core to filter head, check that cartridge O-ring (sleeve seal O-ring on Models 8070 and 80100) is in place.
8. Slide new filter sleeve over separator core.
9. Replace bottom cap and wing nut.
10. Attach bowl and collar to filter head.
11. After making sure that the manual drain is closed, pressurize unit by slowly opening inlet valve, then opening outlet valve, and finally closing bypass valve.

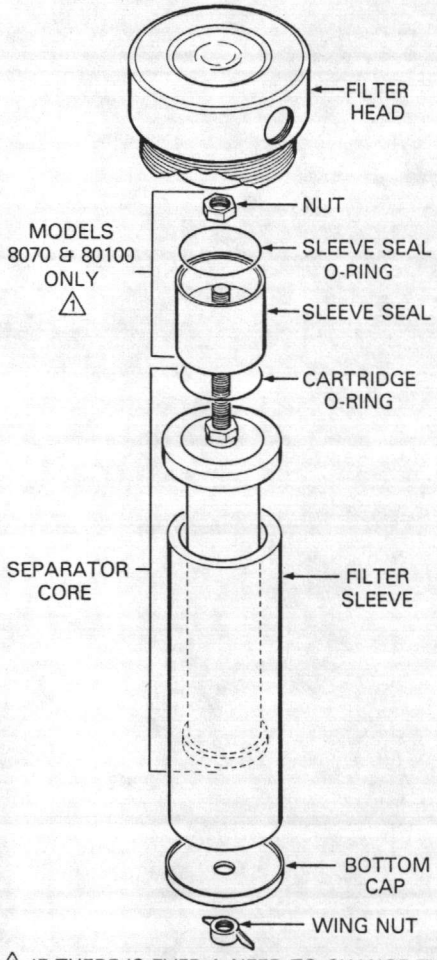

1 IF THERE IS EVER A NEED TO CHANGE THE COMPLETE SEPARATOR/DRAIN CARTRIDGE ON MODELS 8070 & 80100, REMOVE SLEEVE SEAL NUT AND SLEEVE SEAL FROM OLD CARTRIDGE AND REINSTALL ON NEW CARTRIDGE. X2058

Fig. 3. Separator/Drain cartridge detail.

FILTER REPLACEMENT (40 MICRON W/GASKETS)—OLDER MODELS

1. Depressurize system and drain filter by opening drain cock.
2. Unscrew the metal collar holding the bowl to the filter head and remove bowl and collar.
3. Disassemble filter cartridge. Replace filter element and gaskets (Fig. 4).
4. Assemble filter cartridge.
5. Attach bowl and collar to filter head.
6. Close drain cock and pressurize system and check for leakage.

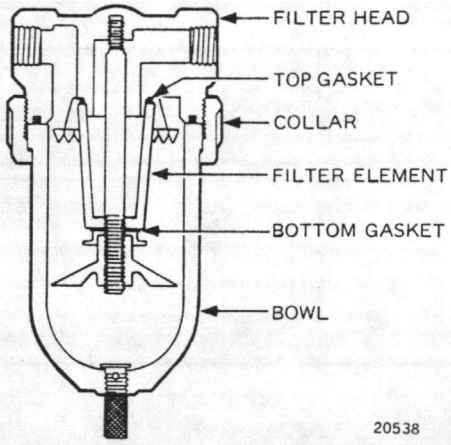

Fig. 4. Filter Replacement (40 Micron w/Gaskets).

ELECTRIC COMPONENTS

WARNING

Disconnect power to unit when performing any electric service work.

Refer to Figures 5, 6, and 7 for schematics of electric components.

Figure 8 shows detail of the overload and the relay.

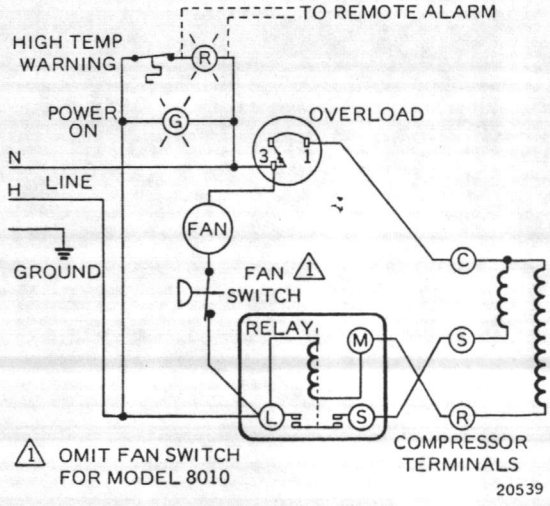

Fig. 5. HKN8010, HKN8210, HKN8015, HKN8025, HKN8035—Schematic.

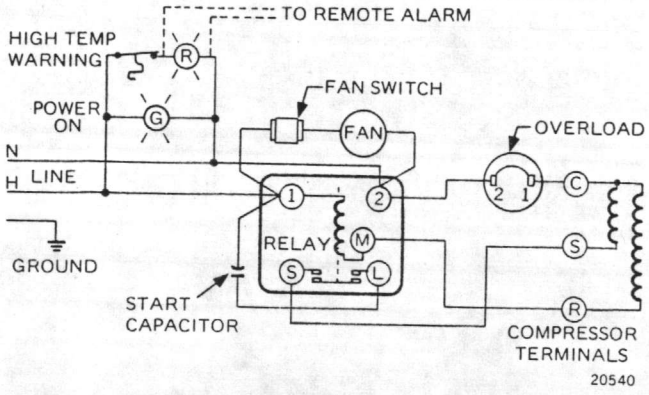

Fig. 6. HKN8045 and HKN8055 (115/1/60), and HKN8070 and HKN80100 (230/208/1/60)—Schematic.

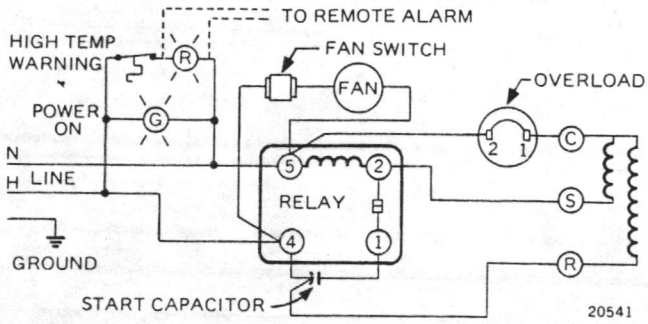

Fig. 7. HKN8070 and HKN80100 (115/1/60)—Schematic.

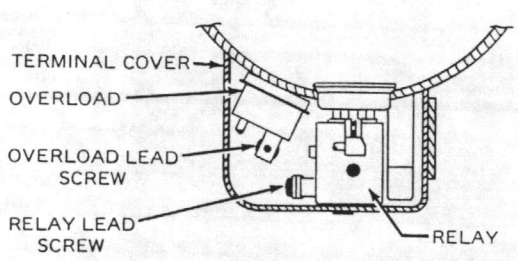

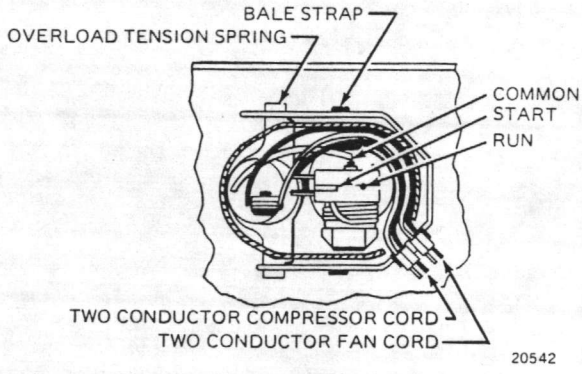

Fig. 8. Overload and Relay Detail.

BYPASS VALVE HKN17012

If it is necessary to replace the bypass valve (Fig. 1), first depressurize the system by shutting off air compressor. Loosen the fittings, replace the valve, and tighten the fittings. After all the fittings have been tightened, pressurize the system and check for leaks.

PRV FILTER STATION ELEMENT REPLACEMENT

Filter Element Replacement Kit 14004209 is used to replace the filter element in the prv filter station on the HKN8210 units. Replacement procedures are packed with the kit.

For any problems with the pressure reducing valve and filter station, refer to Service Data, Form Number 75-2558.

PARTS AND ACCESSORIES

PARTS LIST

Refer to Figure 9 for location of parts, and Table 3 for listing of available repair parts.

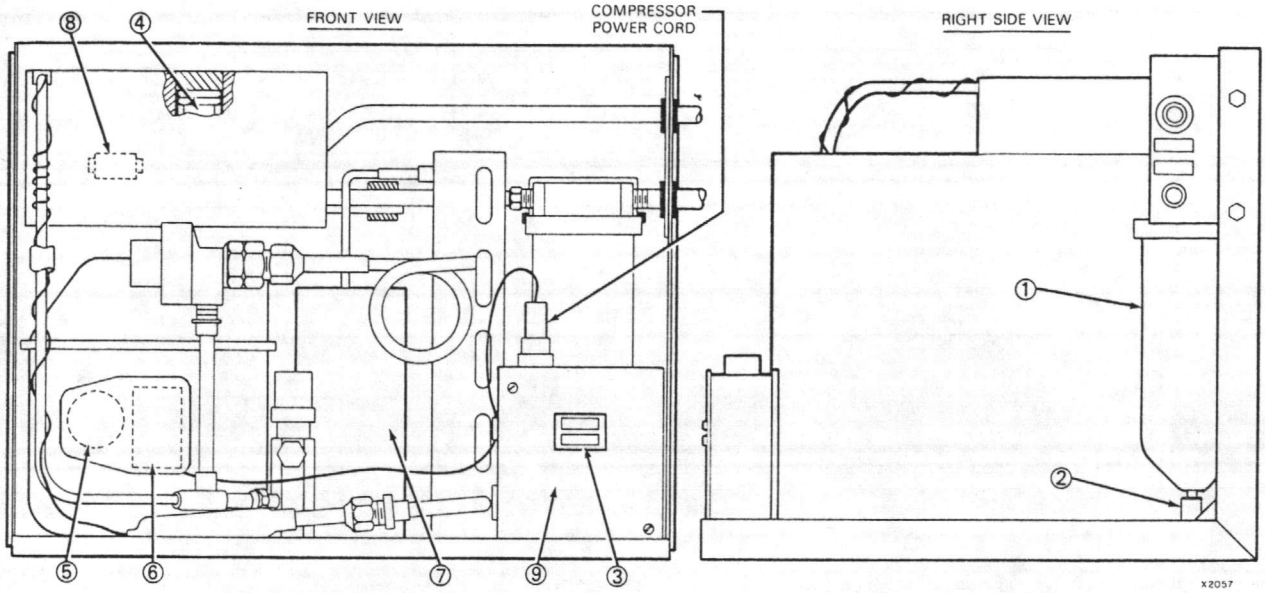

Fig. 9. Location of Repair Parts for Hankison Compressed Air Dryers.

Table 3. Parts List for Available Replacement Parts for Hankison Compressed Air Dryers.

Fig. 9 Ref. No.	Description	Part Number
1	Separator/Drain Assy with Bowl ⚠1	
	HKN8010 and HKN8210 with Poly Bowl	HKN03708207
	HKN8010 and HKN8210 with Metal Bowl	HKN03708308
	HKN8015 with Poly Bowl	HKN03708003
	HKN8015 with Metal Bowl	HKN03708007
	HKN8025 with Poly Bowl	HKN03708404
	HKN8025 with Metal Bowl	HKN03708505
	HKN8035 with Poly Bowl	HKN03708604
	HKN8035 with Metal Bowl	HKN03708705
	HKN8045 with Metal Bowl	HKN03709607
	HKN8070 with Metal Bowl	HKN03710105
	Separator/Drain Cartridge	
	HKN8010 and HKN8210	HKN07444101
	HKN8015, HKN8025, HKN8035	HKN07444201
	HKN8045, HKN8055, HKN8070	HKN07444301
	HKN80100	HKN07444401
	Bowls	
	16 oz Poly Bowl w/Guard (used on HKN8010, 8210, 8015, 8025, 8035)	HKN03081003
	16 oz Metal Bowl (used on HKN8015, HKN8025, HKN8035)	HKN44600793
	32 oz Metal Bowl, optional (used on HKN8045, HKN8055)	HKN44600794
	48 oz Metal Bowl (used on HKN8070, HKN80100)	HKN34100501
	Filter Element, 40 Micron w/gaskets	
	HKN8010, HKN8015, HKN8025, HKN8035	HKN44604363
	HKN8045, HKN8055, HKN8070, HKN80100	HKN44604364
	Filter Sleeve	
	HKN8010, HKN8210	HKN07341
	HKN8015, HKN8025, HKN8035	HKN07342
	HKN8045, HKN8055, HKN8070, HKN80100	HKN07343
2	Snap Trap Mechanism (used on all models)	HKN05417001

Table 3. Parts List for Available Replacement Parts for Hankison Compressed Air Dryers. (Continued)

Fig. 9 Ref. No.	Description	Part Number
3	Dual Light Assembly	
	Used on all 115/1/60 models	HKN63504548
	Used on all 230/1/60 models	HKN63504549
4	High Temperature Sensor (thermo disc)	HKN59301891
5	Overload	
	HKN8010, HKN8210 (115/1/60)	HKN59255702
	HKN8010, HKN8210 (230/1/60)	HKN59255703
	HKN8015 (115/1/60)	HKN59255724
	HKN8015 (230/1/60)	HKN59255744
	HKN8025, HKN8035 (115/1/60)	HKN59255747
	HKN8025, HKN8035 (230/1/60)	HKN59255748
	HKN8045, HKN8055 (115/1/60)	HKN59255737
	HKN8045, HKN8055 (208/230/1/60)	HKN59255706
	HKN8070, HKN80100 (115/1/60)	HKN59255757
	HKN8070, HKN80100 (208/230/1/60)	HKN59255758
6	Starting Relay	
	HKN8010, HKN8210, HKN8015, HKN8025, HKN8035 (115/1/60)	HKN59456595
	HKN8010, HKN8210 (230/1/60)	HKN59456556
	HKN8015 (230/1/60)	HKN59456587
	HKN8025, HKN8035 (230/1/60)	HKN59456592
	HKN8045, HKN8055 (115/1/60)	HKN59456573
	HKN8045, HKN8055 (208/230/1/60)	HKN59456574
	HKN8070, HKN80100 (115/1/60)	HKN59456593
	HKN8070, HKN80100 (208/230/1/60)	HKN59456594
7	Fan Motor	
	HKN8010, HKN8210, HKN8015 (115/1/60)	HKN61052375
	HKN8010, HKN8210, HKN8015 (230/1/60)	HKN61052376
	HKN8025, HKN8035 (115/1/60)	HKN61052391
	HKN8025, HKN8035 (230/1/60)	HKN61052374
	HKN8045, HKN8055 (115/1/60)	HKN61052352
	HKN8045, HKN8055 (208/230/1/60)	HKN61052384
	HKN8070, HKN80100 (115/1/60)	HKN61052393
	HKN8070, HKN80100 (208/230/1/60)	HKN61052394
8	Fan Cut-out Switch	
	HKN8015, HKN8025, HKN8035, HKN8045, HKN8055, HKN8070, HKN80100	HKN413014310
9	Start Capacitor (in electrical box)	
	HKN8045, HKN8055 (115/1/60)	HKN59101035
	HKN8045, HKN8055 (208/230/1/60)	HKN59101036
	HKN8070, HKN80100 (115/1/60)	HKN59101042
	HKN8070, HKN80100 (208/230/1/60)	HKN59101043
—	Filter Element Replacement Kit (used on prv filter station for HKN8010 and HKN8210 units)	14004209-001
—	Bypass Valve	HKN17012

⚠ Complete Separator/Drain Assy not replaceable for Models HKN8055 and HKN80100.

ACCESSORIES

No accessories are listed for the Hankison Compressed Air Dryers.

SALES AND SERVICE

ALABAMA
Birmingham, AL
(205) 323-2431

Mobile, AL
(800) 633-1644

ALASKA
Anchorage, AK
(907) 274-0551

ARIZONA
Phoenix, AZ
(602) 861-4512

Tucson, AZ
(602) 795-4209

ARKANSAS
Little Rock, AR
(501) 664-0070

CALIFORNIA
Irvine, CA
(714) 557-6392

Los Angeles, CA
(213) 726-6161

Sacramento, CA
(916) 485-2221

San Diego, CA
(714) 292-5311

San Jose, CA
(415) 957-2674

San Francisco, CA
(415) 957-2674

COLORADO
Denver, CO
(303) 779-6295

CONNECTICUT
Hartford, CT
(203) 549-3800

DELAWARE
Wilmington, DE
(302) 762-3100

DISTRICT OF COLUMBIA
Washington DC
(703) 827-3705

FLORIDA
Jacksonville, FL
(904) 396-6971

Miami, FL
(305) 592-8140

Orlando, FL
(305) 894-3131

Tampa, FL
(813) 877-6426

GEORGIA
Atlanta, GA
(404) 982-2495

HAWAII
Honolulu, HI
(808) 537-5514

ILLINOIS
Chicago North, IL
(312) 478-9266

Chicago South (Lansing), IL
(312) 568-4200

Elgin, IL
(312) 697-7880

Peoria, IL
(309) 692-0610

INDIANA
Fort Wayne, IN
(219) 482-9654

Indianapolis, IN
(317) 243-0831

IOWA
Davenport, IA
(319) 359-3441

Des Moines, IA
(515) 288-3601

KENTUCKY
Louisville, KY
(502) 459-5970

LOUISIANA
Baton Rouge, LA
(504) 924-8626

New Orleans, LA
(504) 456-7232

Shreveport, LA
(214) 387-5467

MAINE
Portland, ME
(207) 775-3501

MARYLAND
Baltimore, MD
(301) 828-0900

MASSACHUSETTS
Boston, MA
(617) 962-0250

MICHIGAN
Detroit, MI
(313) 478-1600

Grand Rapids, MI
(616) 247-4811

Saginaw, MI
(517) 792-8707

MINNESOTA
Duluth, MN
(612) 770-8557

Minneapolis, MN
(612) 830-3880

St. Paul, MN
(612) 770-8557

MISSISSIPPI
Jackson, MS
(601) 982-2090

MISSOURI
Kansas City, MO
(816) 358-4200

St. Louis, MO
(314) 576-2635

NEBRASKA
Omaha, NE
(402) 331-3200

NEW HAMPSHIRE
Bedford, NH
(603) 625-6502

NEW JERSEY
Mt. Laurel, NJ
(609) 234-2224

Parsippany, NJ
(201) 263-2225

Westfield, NJ
(201) 233-9200

NEW MEXICO
Albuquerque, NM
(505) 884-1070

NEW YORK
Albany, NY
(518) 456-7000

Buffalo, NY
(716) 689-0200

Brooklyn, NY
(212) 392-4300

Manhattan, NY
(212) 392-4300

Rochester, NY
(716) 424-2700

Syracuse, NY
(315) 451-4000

White Plains, NY
(914) 948-7511

Woodbury, NY
(516) 931-1506

NORTH CAROLINA
Charlotte, NC
(704) 364-4770

Greensboro, NC
(919) 292-1556

NORTH DAKOTA
Fargo, ND
(701) 235-4221

OHIO
Akron, OH
(216) 733-2244

Cincinnati, OH
(513) 745-7151

Cleveland, OH
(216) 459-6057

Columbus, OH
(614) 486-5971

Dayton, OH
(513) 237-4035

Toledo, OH
(419) 473-9721

OKLAHOMA
Oklahoma City, OK
(405) 848-2811

Tulsa, OK
(918) 437-5934

OREGON
Eugene, OR
(503) 485-2251

Portland, OR
(503) 245-0731

PENNSYLVANIA
Harrisburg, PA
(717) 564-8000

Philadelphia, PA
(215) 666-8302

Pittsburgh, PA
(412) 928-4235

Wilkes-Barre, PA
(717) 654-2477

PUERTO RICO
San Juan, PR
(809) 792-7075

RHODE ISLAND
Providence, RI
(401) 438-6000

SOUTH CAROLINA
Columbia, SC
(803) 765-9426

Greenville, SC
(803) 232-2437

SOUTH DAKOTA
Sioux Falls, SD
(605) 336-0986

TENNESSEE
Memphis, TN
(901) 345-6222

Nashville, TN
(615) 385-3400

TEXAS
Dallas, TX
(214) 387-5467

El Paso, TX
(915) 533-9924

Houston, TX
(713) 780-6603

Lubbock, TX
(806) 762-5202

San Antonio, TX
(512) 341-4691

UTAH
Salt Lake City, UT
(801) 487-0681

VIRGINIA
Richmond, VA
(804) 285-8211

Roanoke, VA
(703) 989-5201

Virginia Beach, VA
(804) 461-0263

WASHINGTON
Seattle, WA
(206) 233-2150

Spokane, WA
(509) 534-5022

WEST VIRGINIA
Charleston, WV
(513) 745-7151

Clarksburg, WV
(304) 623-6551

WISCONSIN
Appleton, WI
(414) 733-4491

Madison, WI
(608) 222-3400

Milwaukee, WI
(414) 784-6260

WYOMING
Casper, WY
(307) 265-9374

CANADA — Honeywell Limited – Honeywell Limitee, 740 Ellesmere Road – Scarborough, Ont.

ALBERTA
Calgary
Edmonton

BRITISH COLUMBIA
Vacouver

MANITOBA
Winnipeg

NEW BRUNSWICK
Moncton

NEW FOUNDLAND
St John's

NOVA SCOTIA
Halifax

ONTARIO
Hamilton
London
Ottawa
Sudbury
Toronto
Windsor

QUEBEC
Montreal
Quebec

SASKATCHEWAN
Regina
Saskatoon

INTERNATIONAL

ARGENTINA
BUENOS AIRES

AUSTRALIA
WATERLOO, N.S.W.
Adalaide
Brisbane
Canberra
Darwin
Hobart
Melbourne
Newcastle
Perth
Townsville

AUSTRIA
VIENNA
Graz
Innsbruck
Klagenfurt
Linz

BELGIUM
BRUSSELS
Gent
Liege/Grivegnee
Luxembourg

BRAZIL
SAO PAULO
Rio de Janeiro

DENMARK
COPENHAGEN
Aarhus
Fredericia

DOMINICAN REPUBLIC
SANTO DOMINGO

FINLAND
ESPOO
Tampere

FRANCE
BOIS D'ARCY
Lyon
Marseille

GERMANY
OFFENBACH/Main
Dusseldorf
Echterdingen
Hamburg
Hannover-Langenhagen
Mannheim
Muenchen
Nuernberg

GREECE
ATHENS

HONG KONG

ITALY
MILAN
Bologna
Firenze
Padova
Rome
Torino

JAPAN
TOKYO
Hiroshima
Kokura
Nagoya
Osaka

KUWAIT

MEXICO
MEXICO CITY, D.F.
Monterrey, Nuevo Leon

NETHERLANDS
AMSTERDAM
Schiphol-Centrum

NEW ZEALAND
AUCKLAND
Christchurch
Dunedin
Wellington

NORWAY
OSLO
Bergen
Stavanger
Tromso
Trondheim

PUERTO RICO
San Juan

SAUDI ARABIA
DAMMAM (Dhahran)

SINGAPORE

SOUTH AFRICA
JOHANNESBURG (Transvall)
Cape Town
Durban
Port Elizabeth
Pretoria

SPAIN
MADRID
Barcelona
Gijon
Las Arenas (Bilbao)

SWEDEN
STOCKHOLM
Goteborg
Malmo
Sundsvall

SWITZERLAND
ZURICH
Basel
Bern
Geneva

TAIWAN
TAIPEI

UNITED ARAB EMIRATES
SHARJAH

UNITED KINGDOM
LONDON (BRACKNELL)
Aberdeen (Scotland)
Belfast (N. Ireland)
Cardiff (S. Wales)
Cheadle Hulme, Chesire
Dublin (Ireland)
East Kilbride, Glasgow (Scotland)
Erdington, Birmingham
Maidenhead, Berkshire
Sheffield, Yorkshire
Stockton-on-Tees, Cleveland

VENEZUELA
CARACAS
Maracaibo
Puerto Ordaz
Valencia

APPLIED INSTRUCTION

BUILDING M107

MONTFORD LANDING ROAD (CAMP JOHNSON)

MCB CAMP LEJEUNE, NORTH CAROLINA

CONTRACT #62470-84-C-4087

APPLIED INSTRUCTION BUILDING

MONTFORD LANDING ROAD (CAMP JOHNSON)

MCB CAMP LEJEUNE, NORTH CAROLINA 28542

CONTRACT #62470-84-C-4087

ARCHITECT/ENGINEER:

Nakazawa Corporation
216 Latta Arcade
Charlotte, North Carolina 28202

GENERAL CONTRACTOR:

Lonestar General Contractors, Inc.
340 Center Street
P.O. Box 5108
Jacksonville, North Carolina 28540
(919) 353-3411
CONTACT: C. W. BERRY

Lonestar General Contractors, Inc.
P.O. Box 7881
Tyler, Texas 75711
(214) 581-0330

ELECTRICAL CONTRACTOR:

Bryant-Durham Electric Company
342 Center Street
P.O. Box 5024
Jacksonville, North Carolina 28540
(919) 353-7141
CONTACT: JAMES H. COLE

Bryant-Durham Electric Company
5102 Neal Road
P.O. Drawer 2597
Durham, North Carolina 27705
(919) 383-2526

APPLIED INSTRUCTION BUILDING
MONTFORD LANDING ROAD (CAMP JOHNSON)
MCB CAMP LEJEUNE, NORTH CAROLINA
CONTRACT #N62470-84-C-4087

SUPPLIER	EQUIPMENT
Consolidated Electrical Distributors P.O. Box 6609 Raleigh, North Carolina 27628 (919) 828-9326 CONTACT: KEN TURNER	PADMOUNTED TRANSFORMERS DRY-TYPE TRANSFORMERS PANELBOARDS
Electric Supply Company P.O. Box 2815 Durham, North Carolina 27705 (919) 672-5873 CONTACT: RALPH HILL	ELECTRICAL DEVICES
Moore Electric Supply Company P.O. Box 41169 Raleigh, North Carolina 27629 (919) 332-2991 CONTACT: JACKIE BENSON	INTERIOR LIGHTING FIXTURES EXTERIOR LIGHTING FIXTURES
Electronic Sound & Equipment Company P.O. Box 14166 Raleigh, North Carolina 27620 (919) 266-3321 CONTACT: BILL HURLEY	FIRE ALARM SYSTEM INTERCOMMUNICATION SYSTEM

APPLIED INSTRUCTION BUILDING
MONTFORD LANDING ROAD (CAMP JOHNSON)
MCB CAMP LEJEUNE, NORTH CAROLINA
CONTRACT #N62470-84-C-4087

INDEX

PADMOUNTED TRANSFORMERS	SECTION I
PANELBOARDS	SECTION II
DRY-TYPE TRANSFORMERS	SECTION III
ELECTRICAL DEVICES	SECTION IV
INTERIOR LIGHTING FIXTURES	SECTION V
EXTERIOR LIGHTING FIXTURES	SECTION VI
FIRE ALARM	UNDER SEPARATE COVER
INTERCOMMUNICATION SYSTEM	UNDER SEPARATE COVER

TAB PLACEMENT HERE

DESCRIPTION:

Section I

☒ **Tab page did not contain hand written information**

☐ **Tab page contained hand written information**
***Scanned as next image**

Confidential Records Management, Inc.
New Bern, NC
1-888-622-4425
9/08

INSTRUCTION MANUAL

Three Phase, Liquid Filled Compartmental Type Pad Mounted Transformers

CLASS 7230

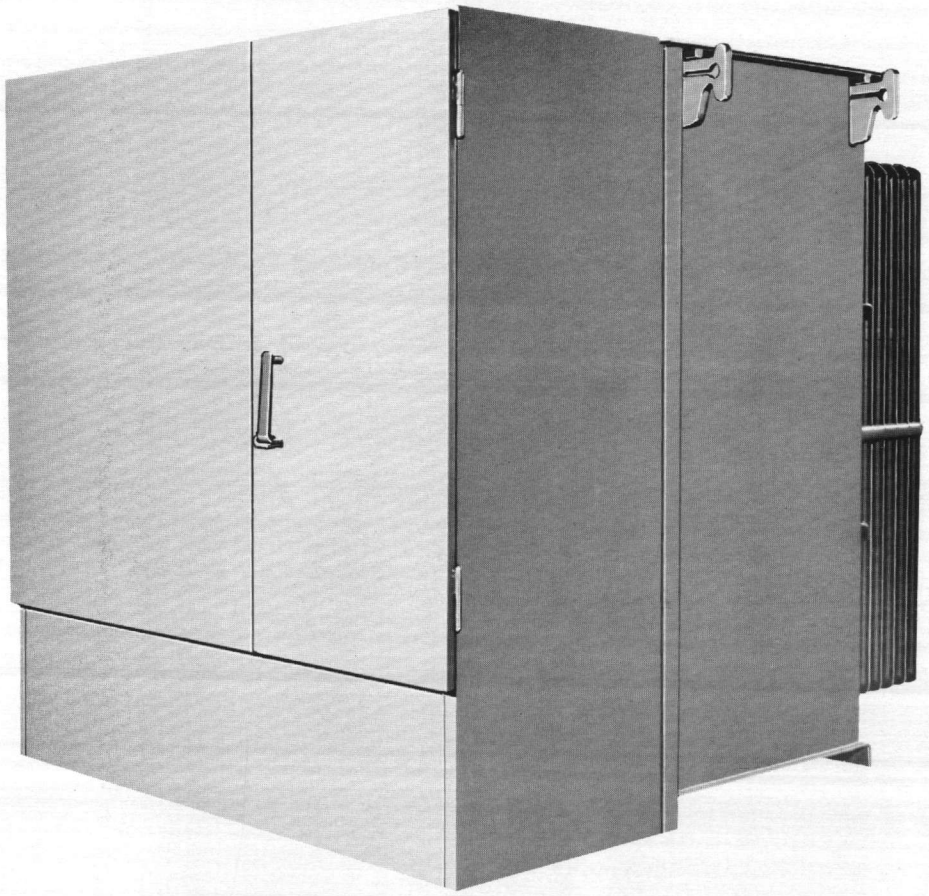

CAUTION: DE-ENERGIZE TRANSFORMER BEFORE PERFORMING ANY MAINTENANCE PROCEDURE OUTLINED IN THIS PUBLICATION.

SQUARE D COMPANY

INDEX

PART 1 — SHIPPING, INSPECTION, HANDLING, STORAGE

1-1 SHIPPING
1-2 INSPECTION
1-2.1 External Inspection
1-2.2 Internal Inspection
1-2.3 Oil Sampling
1-2.4 Oil Level Inspection
1-3 HANDLING
1-4 STORAGE

PART 2 — INSTALLATION

2-1 LOCATION
2-2 ELECTRICAL CONNECTIONS
2-2.1 High Voltage Bushings
2-2.2 Low Voltage Bushings
2-2.3 Grounding

PART 3 — OPERATION

3-1 TAP CHANGER OPERATION
3-2 DUAL VOLTAGE OR DELTA/WYE SWITCH OPERATION
3-3 LOAD BREAK SWITCH AND FUSE OPERATION
3-3.1 Oil Switch Operation
3-3.2 Elbow Terminator Operation
3-3.3 Bay-O-Net Fuse Operation
3-3.4 Dry Well Canister Fuse Operation
3-3.5 Arc-Strangler Switch Operation
3-3.6 Weak Link Fuses
3-4 INSPECTION FOLLOWING ENERGIZATION

PART 4 — MAINTENANCE

4-1 GENERAL
4-2 ROUTINE INSPECTION SCHEDULE
4-3 MAINTENANCE OF EXTERNAL FEATURES
4-3.1 Exterior Finish
4-3.2 Oil Leaks
4-3.3 Electrical Connections
4-3.4 Bushings
4-3.5 Accessories
4-4 MAINTENANCE OF INTERNAL FEATURES
4-4.1 General
4-4.2 Locating Pressure Leaks
4-4.3 Sampling the Oil
4-4.4 Draining and Filling the Tank
4-4.5 Removing and Replacing the Tank Cover

Bay-O-Net is a trademark of RTE Corporation.
Arc-Strangler is a trademark of Mc-Graw-Edison Company.

© Square D Company, 1984

PAD MOUNTED TRANSFORMERS

STANDARD FEATURES

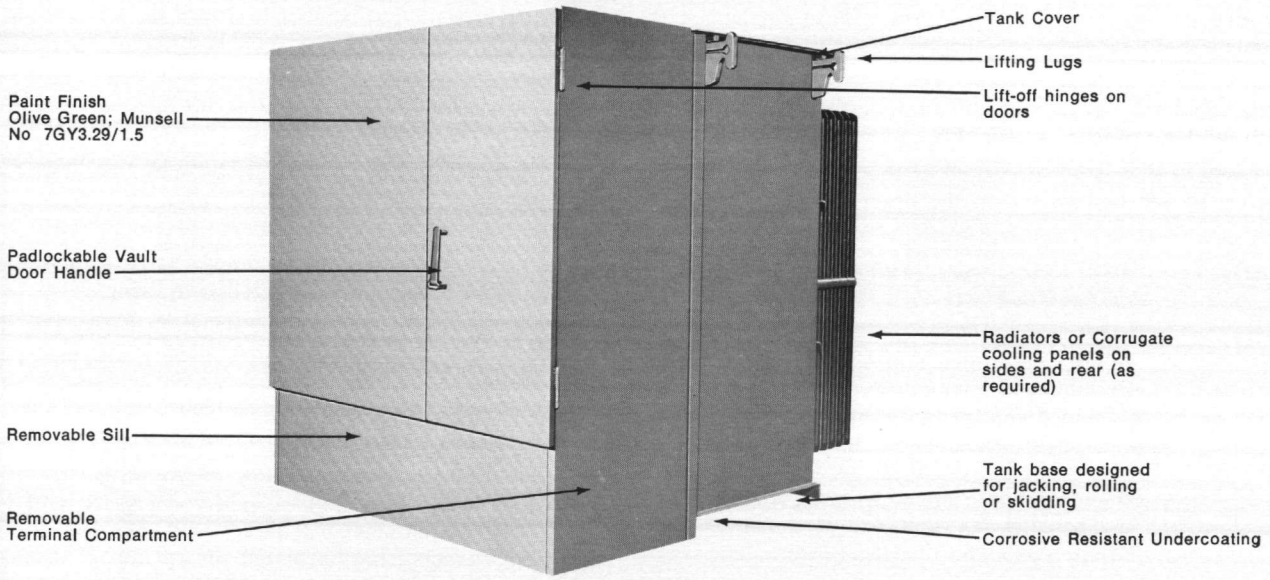

FIGURE 1 - EXTERNAL FEATURES

THE PAD MOUNTED TRANSFORMER DIFFERS FROM THE SUBSTATION OR POLE STYLE TRANSFORMER BY ITS APPLICATION AND EXTERNAL APPEARANCE. DESIGNED FOR APPLICATION WITH UNDERGROUND FEEDERS, THE PAD MOUNT IS WEATHERPROOF, TAMPERPROOF, COMPARTMENTALIZED ON THE FRONT, LOW IN PROFILE, AND PAINTED A DARK OLIVE GREEN.

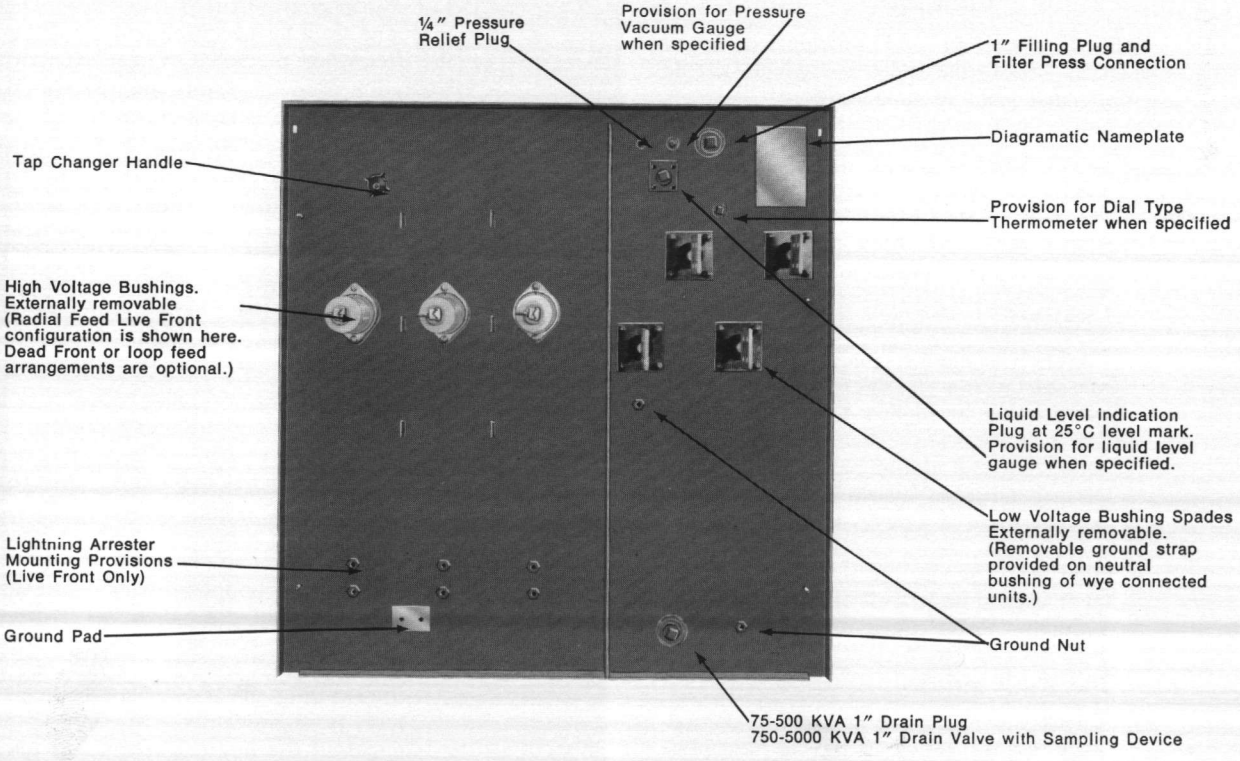

FIGURE 2 - TERMINAL COMPARTMENT FEATURES

PAD MOUNTED TRANSFORMERS

INTRODUCTION

This instruction booklet includes information on shipping, inspection, handling, installation, storage, operation and maintenance of pad mounted transformers. Each specific transformer will have its own specification and unique combination of construction features. These features will be detailed in the transformer outline and nameplate drawings. The outline and nameplate drawings in conjunction with this booklet provide information necessary for a reliable installation, operation and maintenance procedure for any specific pad mounted transformer.

This booklet is not intended as an application guide for pad mounted transformers or a substitute for adequate training in safe working procedures for this and related high voltage equipment.

If further information is desired or should particular problems arise which are not covered sufficiently by this booklet, the matter should be referred to the nearest Square D Company field office.

PART 1 — SHIPPING, INSPECTION, HANDLING AND STORAGE

1-1 SHIPPING — The pad mounted transformers are liquid-filled and sealed for open carrier shipment. Each unit is shipped completely assembled and ready for energization. Associated spare fuses, cable terminator kits or other miscellaneous parts are separately crated and possibly shipped with the transformer. The packing list will include a list of any parts shipped with the transformer.

1-2 INSPECTION — Make a visual inspection of the transformer and any boxes containing miscellaneous parts immediately upon receipt. This should be done prior to unloading. If damage or rough handling is evident, file a claim with the transportation company promptly and notify the nearest Square D Company field office. Before rejecting any unit or performing any additional labor, consult Square D Company.

1-2.1 External Inspection — Following is a list of external transformer features which should be checked prior to unloading:

a. Check for any obvious dents or scratches in the front door and sill, tank walls or cooling radiator or corrugate assembly. Such dents and/or scratches in the paint finish can most often be corrected by simple touchup procedures. If necessary, the door and sill parts are field replaceable.

b. Check for liquid coolant leaks. Oily streaks on the transformer surface, at weld seams, on high or low voltage bushing parts, and any collection of the insulating coolant at the base of the transformer must be investigated thoroughly to determine if a leak does exist on the transformer being inspected. A "pinhole" leak or any bushing leak resulting in a very slow loss of liquid is field repairable. Refer to paragraph 4-3.2 of this booklet for further information on this repair process.

c. Check the nameplate for design compliance. Figure 3 shows a typical nameplate indicating items which should be verified. Voltages, KVA ratings, percent voltage impedance (IZ), and other design features must comply with the job specification and outline drawing.

d. Check for accessory features. The transformer outline drawing for the specific order indicates which accessories should be present and their location in the low or high voltage compartment.

1-2.2 Internal Inspection — An inspection of the internal tank is rarely necessary and is required only if there is obvious indication the tank has sustained severe impact damage in transit. If removing the tank cover or maintenance hand hole cover is necessary, certain precautions should be taken as outlined in paragraph 4-4 of this bulletin.

The tank has been sealed at the factory to eliminate any possibility of contamination of the liquid coolant by moisture. The accumulation of moisture over time can destroy the insulating properties of the liquid coolant. Initial inspection of the pressure seal is necessary and can be accomplished by either of the following methods. (Consult Square D Company prior to performing any repair.):

a. Observe the pressure/vacuum gauge, if supplied. An effective seal is demonstrated by a consistent rise and fall in pressure readings with rise and fall of liquid coolant and ambient temperature. A flat or unchanged reading over time and at varying temperatures is evidence of a leak that must be located and repaired (see paragraph 4-4.2 of this bulletin).

b. Pull the pressure relief valve ring momentarily, if supplied, or loosen the vent plug. The sound of rushing air is indication the unit has maintained an effective seal. If there is no indication of rushing air, it is still possible to have an effective seal, as this may only be an indication the ambient temperature and pressure is approximately the same as when the transformer was sealed at the factory. If this is the case, repeat this test at a time during the day when the temperature is significantly different. If it is apparent the internal pressure is remaining unchanged following this procedure, then review paragraph 4-4.2 prior to locating and repairing any leak.

1-2.2 b. Continued

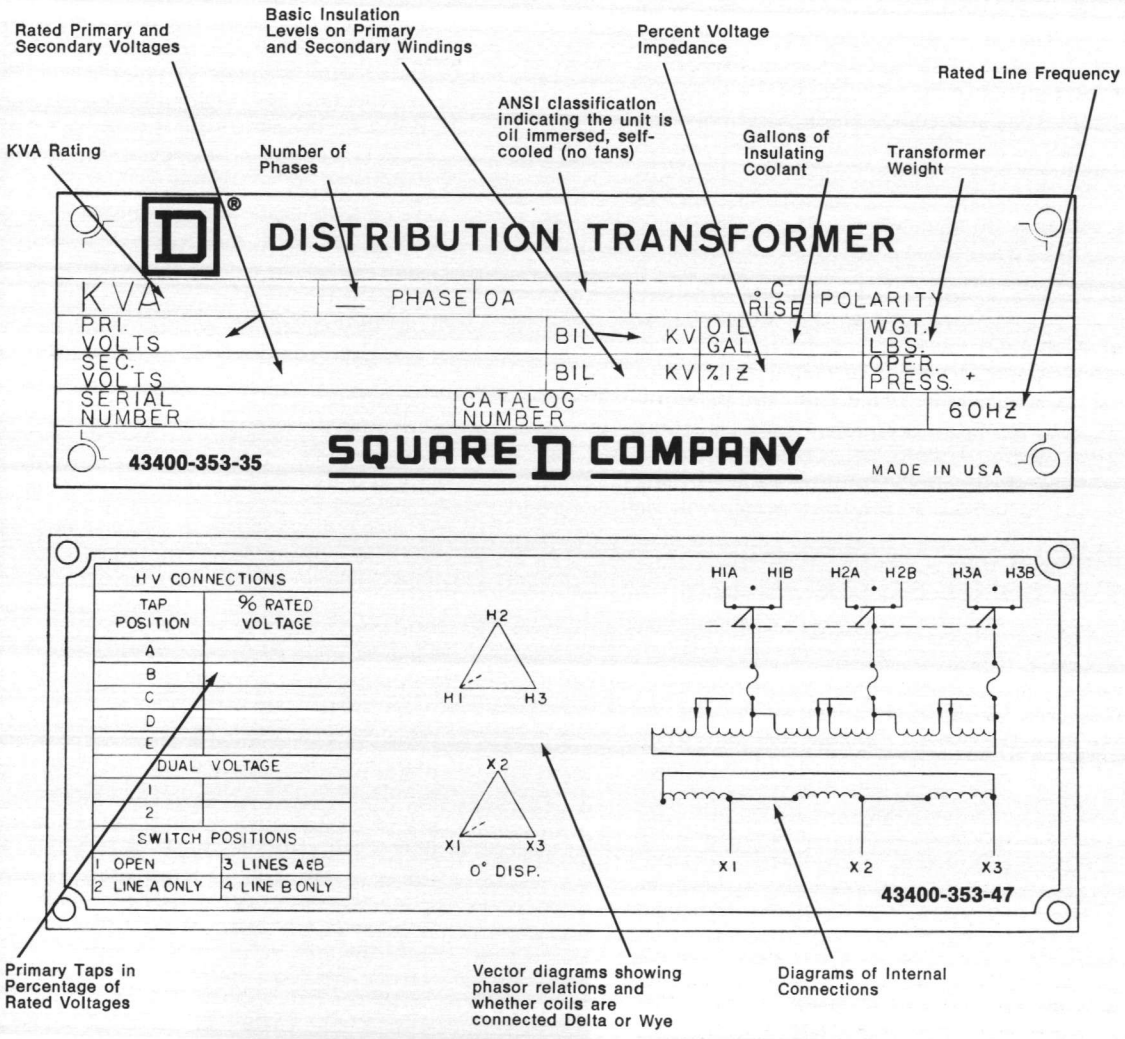

FIGURE 3 - NAMEPLATE DRAWING (TYPICAL)

1-2.3 Oil Sampling — An initial visual or chemical inspection of the liquid insulating coolant is not required unless there is indication that moisture or other contaminants have accidentally entered the tank during transit. If sampling the liquid coolant is required, this procedure is outlined in paragraph 4-4.3 of this bulletin.

1-2.4 Oil Level Inspection — The transformer is shipped with the liquid coolant at the correct operation level. Verify this when the transformer is received by reading the level from the level gauge (if supplied) or by backing out the liquid level one inch pipe plug located near the top of the tank wall inside the low voltage compartment. The correct level can be one inch above or below the level plug; or if reading the level gauge, the indicator can be halfway between the "25°C" mark and the "high" or "low" mark. Consult Square D Company if an incorrect level is observed.

1-3 HANDLING — The transformer is shipped on an open carrier trailer in order to facilitate the use of a crane for unloading. Unloading the unit with a forklift is not recommended as the weights are often excessive and the cooling corrugates or radiators and front compartment assembly are easily damaged. The transformer should always be handled in an upright position to avoid internal stresses on the core and coil mounting assembly and to prevent trapping air in the windings which could create serious problems when the transformer is energized. The transformer weight is given on the nameplate.

Lifting lugs or ears, designed for vertical strain only, are provided for lifting the complete transformer. When the loops of the sling straddle the tank corner, the tank will act as a spreader and the unit may be lifted from a single hook. If the loops do not straddle the corner, a separate spreader or lifting beam must be used to prevent horizontal strain on the lugs. Use lifting cables of the same length so that the transformer will be lifted evenly.

Jacking may be accomplished at the corners of the tank base plate. Do not attempt to raise the transformer by placing jacks under drain valves, pipe connections or other attachments.

When the transformer cannot be handled by a crane, it may be **skidded** or moved on **rollers**, but care must be taken not to damage the tank base structure. When rollers are used under larger transformers, skids must be used to distribute stress over the tank base.

1-4 STORAGE — If the transformer must be stored, locate it preferably in its permanent location on the concrete pad. If a level concrete surface is not available, then a pallet of adequate strength will provide a suitable means of keeping the unit from direct contact with the ground. The transformer should not be stored in the presence of corrosive gases such as chlorine, etc.

Periodically inspect the stored transformer just as a unit that is in service. Insure that an effective pressure seal is maintained and check for leaks and any rust spots.

PART 2 — INSTALLATION

2-1 LOCATION — Provide a strong, level foundation, preferably of reinforced concrete, and locate it to insure adequate air circulation and accessibility for inspection and maintenance. A dry vault or compartment in which the transformer is installed should be provided with adequate ventilation to avoid tank overheating. At high altitudes, above 3,300 feet, the decreased air density reduces transformer cooling efficiency. Contact Square D Company to verify the suitability of the unit for higher altitude application.

2-2 ELECTRICAL CONNECTIONS — Make sure all electrical connections are properly tightened and insure that there are not strains on the terminals which could cause loose connections. Provide sufficiently flexible leads to avoid mechanical strains caused by expansion and contraction. The bushing will support a considerable weight. However, if cracked due to excessive strains, they must be replaced (contact Square D Company).

2-2.1 High Voltage Bushing Connections — High voltage bushings are provided per the job specification as either porcelain live front with exposed metal eyebolt terminals (see Figure 4a) or as a molded dead front (see Figure 4b). Lugs are not required to terminate the cable on a live front bushing. However, with the live front design and the use of shielded cable, a cable stress relief terminator kit must be installed on each high voltage cable. An elbow terminator kit must be installed on the cable to permit connection to the dead front bushing. On the dead front design, the elbow terminator kit includes the necessary cable stress relief. Contact Square D Company for application or order information on the live front or dead front terminator kits. Installation instructions are provided with the terminator kits.

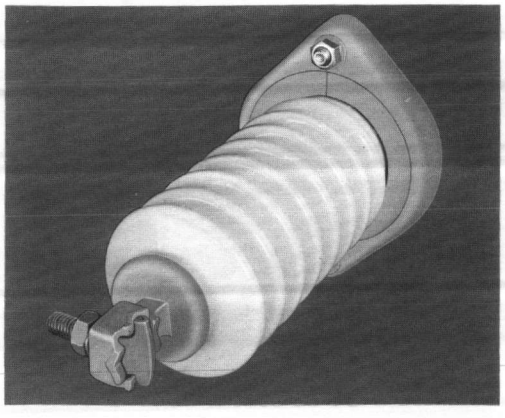

FIGURE 4a

LIVE FRONT PORCELAIN HV BUSHING (WITH EYEBOLT CABLE TERMINAL - NO SEPARATE LUGS REQUIRED)

PART 2 — INSTALLATION (Continued)

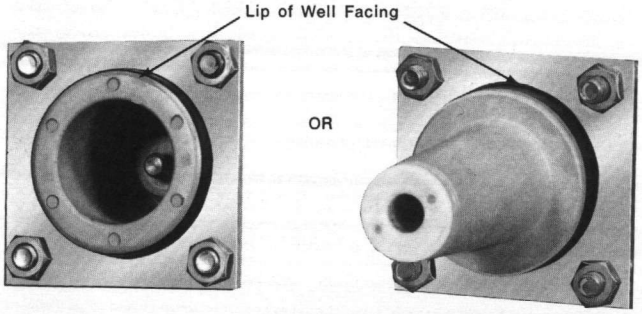

FIGURE 4b

DEAD-FRONT MOLDED HV BUSHING (REQUIRES A SEPARATE ELBOW TERMINATOR KIT FOR EACH CABLE)

The one-piece integrated bushing is shipped with a red plastic protective cap which should be left in place until the transformer is energized to avoid dirt or moisture contamination of the internal bushing contact points. On an energized transformer, a ground cap must be plugged onto any unused bushing well or insert to avoid partial discharge and subsequent bushing damage.

The transformer diagramatic nameplate (see Figure 3) illustrates the internal wiring and external marking of each bushing. Refer to this nameplate for clarity on where to contact each incoming cable.

On live front designs, insure adequate air clearances between all live parts in accordance with the latest ANSI Standard C57.12.22.

2-2.2 Low Voltage Bushing Connections — Low voltage bushings through 600 volts (see Figure 2) are supplied with NEMA standard hole drillings and spacings but are not supplied with lugs. Lugs may be stacked or mounted on either face of the spade. A minimum one inch air clearance must be maintained between phase-to-phase and phase-to-ground live parts.

2-2.3 Grounding — Ground the tank permanently and effectively by means of the ground pads or nuts at the base of the tank wall in both the high and low voltage compartments. A good, permanent, low resistance ground is essential for adequate protection from the tank becoming momentarily energized by internal or external faults or lightning surges. Do not use cubicle hold down bolts or cleats or any other plug fitting to establish a tank ground.

PART 3 — OPERATION

3-1 TAP CHANGER OPERATION —

CAUTION:

DO NOT CHANGE TAP SWITCH POSITION WHEN TRANSFORMER IS ENERGIZED! Remove the source voltage before operating the tap switch. Permanent damage to the transformer can occur if this procedure is not followed.

CAUTION:

IF A DUAL VOLTAGE SWITCH IS ON THE TRANSFORMER, INSURE THE TAP SWITCH IS IN THE POSITION MARKED ON THE NAMEPLATE WHEN THE DUAL SWITCH IS IN THE LOWER VOLTAGE POSITION. Primary coil failure will result if this procedure is not followed.

A no load, de-energized, five-position, tap changer is supplied as a standard accessory with each Square D transformer except dual voltage units. The tap switch is located in the high voltage compartment and is hand operated only. The source voltage must be disconnected prior to operating the switch in order to prevent damage to the transformer which could result in a safety hazard.

Prior to energizing or applying voltage to the transformer, turn the tap switch to the desired voltage position. Positions are marked A, B, C, D and E and correspond to the primary voltages stamped on the transformer nameplate. The unit is shipped with the tap switch in the rated voltage position (normally position "C"). Each position changes the primary to secondary winding ratio by 2½% and hence can alter the secondary voltage by this increment.

To raise the secondary voltage, the tap switch must be moved to positions D or E. To lower secondary voltage, the tap switch must be moved closer to positions A or B.

A common style of pad mount tap switch handle is shown in Figure 5a. It has a screw type cap which can be removed, reversed and used as a knob control handle for the tap changer. Another style of tap switch handle is shown in Figure 5b and operates by turning the handle left to right.

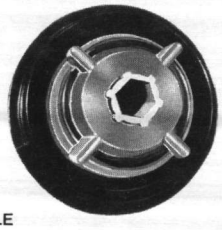

FIGURE 5a

TAP CHANGER HANDLE (KNOB STYLE)

FIGURE 5b

TAP CHANGER HANDLE
(HANDLE STYLE)

3-2 DUAL VOLTAGE OR DELTA/WYE SWITCH OPERATION —

CAUTION:

DO NOT CHANGE SWITCH POSITION WHEN TRANSFORMER IS ENERGIZED! Remove the source voltage before operating the switch. Permanent damage to the transformer can occur if this procedure is not followed.

CAUTION:

IF A DUAL VOLTAGE SWITCH IS ON THE TRANSFORMER, INSURE THE TAP SWITCH IS IN THE POSITION MARKED ON THE NAMEPLATE WHEN THE DUAL SWITCH IS IN THE LOWER VOLTAGE POSITION. Primary coil failure will result if this procedure is not followed.

Transformers designed with dual voltage windings or reconnectable delta/wye windings as indicated on the nameplate have a de-energized, two position, dual voltage or delta/wye switch in the high voltage compartment. It is hand operated and requires that the source of voltage be disconnected prior to operating the switch. Prior to energizing the transformer, insure that fuses and lightning arresters are the correct size for the particular voltage setting.

FIGURE 6

DUAL VOLTAGE OR
DELTA/WYE SWITCH HANDLE

3-3 LOAD BREAK SWITCH AND FUSE OPERATION — Following are operation procedures for switch and fuse devices which are supplied only as required by the specific job specifications.

3-3.1 Oil Switch Operation — If specified by the design, a load break, gang operated, spring loaded oil switch is supplied in the high voltage compartment with an external hook stick operable handle mechanism. Depending on the design, this switch can be either a two position (ON-OFF) for a radial fed transformer, or a three or four position switch to provide sectionalizing for a loop or dual fed transformer. The switching schematic is shown on the nameplate. Figure 7 shows one style of sectionalizing oil switch with four positions for loop feed application.

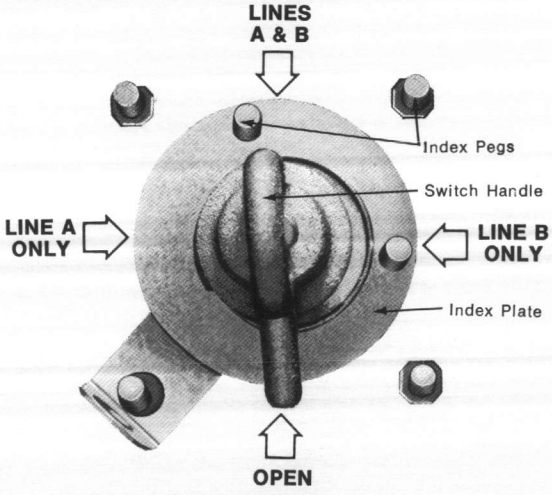

FIGURE 7
OIL SWITCH (FOUR-POSITION SHOWN)

To operate this type switch, a hook stick must be applied to the index plate moving it over the peg between the present setting and the desired new setting. This index plate prevents the switch from switching to more than 90°, or one position at a time. Next, the hook stick is applied to the loop handle on the oil switch and turned approximately 180° until the switch snaps to the next position.

3-3.2 Elbow Terminator Operation — Used in conjunction with dead front bushings only (Figure 4b) the elbow terminator (shown in Figure 8a) eliminates the need for a cable stress relief kit and permits a completely dead front, visible disconnect operation. It is constructed of molded rubber and has a stainless steel reinforced pulling eye for convenient line tool operation. A Square D Company hand grip shot gun tool with special UD elbow connector is recommended for this operation. The elbow is pushed straight into the dead front bushing insert for connecting and pulled out for disconnecting operation. The elbow, when properly installed, should be tightly secured over the circular lip of the well facing in order to avoid bushing damage. Consult Square D Company if the elbow does not properly engage with the bushing. The voltage class of the elbow and bushing must be identical to permit proper installation. Both load break and non-load break elbows are available. Load break rated elbows are limited to 10 operations at maximum load conditions.

FIGURE 8a

DEAD FRONT ELBOW TERMINATOR

FIGURE 8b

PARKING BRACKET

A parking bracket is supplied adjacent to the dead front bushing and when supplied with a portable stand off parking bushing, provides a convenient storage location for the disengaged elbow.

CAUTION:

UNUSED DEAD FRONT BUSHINGS WHICH ARE ENERGIZED THROUGH INTERNAL CONNECTIONS MUST BE PROPERLY TERMINATED WITH A GROUNDING CAP TO PREVENT THE DESTRUCTIVE EFFECTS OF PARTIAL DISCHARGE.

Consult Square D Company for order and application information on the elbow, inserts, parking bushings, grounding caps, line tools or any other related equipment.

3-3.3 Bay-O-Net Fuse Operation — The Bay-O-Net fuse and holder is a hook stick operated, load break rated, dead front, individual phase fused disconnect device located in the high voltage compartment above the primary bushings. The Bay-O-Net fuse can be either an expulsion type or a full range current limiting type element (Figures 9a and 9b). Prior to energizing, insure that the Bay-O-Net is properly latched into place.

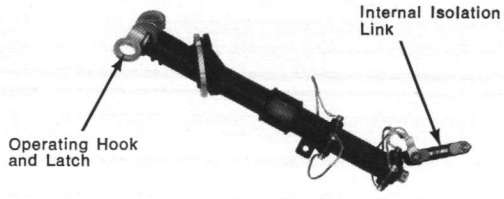

FIGURE 9a

BAY-O-NET EXPULSION FUSE AND HOLDER WITH ISOLATION LINK

FIGURE 9b

BAY-O-NET CURRENT LIMITING FULL RANGE FUSE AND HOLDER

Excess tank air pressure should be released prior to removing the Bay-O-Net to avoid spraying oil out the open holder. To operate this device, a hook stick is inserted in the operating hook, twisted 90° to the unlatched position and pulled firmly until the entire fuse element is removed. When the Bay-O-Net is re-inserted into its holder, the operating hook must be twisted 90° into the latched position.

The fuse element is replaced by unscrewing the fuse barrel located at the end of the cartridge holder. The Bay-O-Net holder must be reinserted to avoid contamination of the oil by moisture.

If the internal isolation link on the expulsion style Bay-O-Net has opened due to a high fault, an internal inspection of the transformer oil and core and coil will be necessary prior to replacing the link (for this procedure, review paragraphs 4-4 of this bulletin).

Bay-O-Net is a trademark of RTE Corporation.

3-3.4 Dry Well Canister Fuse Operation — The dry well canister is an oil tight current limiting fuse holder which extends under oil into the tank above the high voltage bushings (see Figure 10).

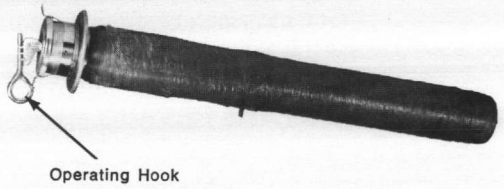

FIGURE 10

CANISTER TYPE FUSE

The canister fuse normally supplied is a non-load break and make individual phase fused disconnect device. If required, the dry well canister is supplied in conjunction with a mechanical interlock to a load break oil switch (paragraph 3-3.1) which prevents removal of the fuse unless the switch is in the "OFF" or de-energized position. When required, a load break and make rated canister is supplied.

To operate the non-load break canister, first insure that the service to the fuse is disconnected. A line tool must be inserted in the operating hook on the canister front plate and pulled firmly outward until the fuse is completely out of the dry well canister. Fuses are replaced by set screws on each end of the fuse holder.

3-3.5 Arc-Strangler Switch Operation — The Arc-Strangler is a 200 ampere hotstick operated load break rated individual phase switch device. The Arc-Strangler may incorporate a full range current limiting fuse on the switch blade or, depending on design, may be tandem mounted with a clip style current limiting fuse (see Figures 11a, 11b, 11c).

FIGURE 11a

ARC-STRANGLER

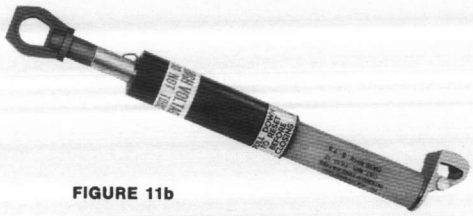

FIGURE 11b

FUSED ARC-STRANGLER

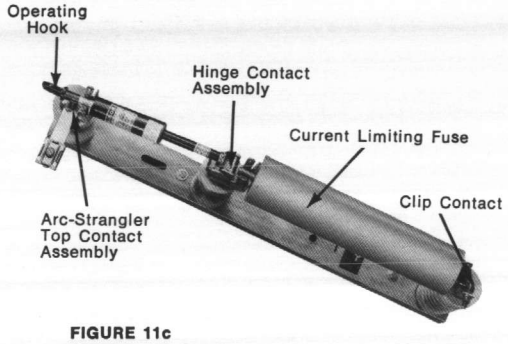

FIGURE 11c

ARC-STRANGLER WITH CLIP FUSE

To operate, the switch stick must be inserted in the operating hook and pulled forward. The Arc-Strangler will swing to an open position. To remove the Arc-Strangler, the switch stick must be inserted in the hinge opening and lifted upward.

The top and hinge contact assemblies must be rigidly fastened to the insulators to prevent rotation and misalignment of the contacts. Also, these contact spacings are set at the factory and normally do not require adjustment. If contact adjustment is ever required, consult Square D Company.

Arc-Strangler is a trademark of Mc-Graw-Edison Company.

3-3.6 Weak Link Fuses — When required by the design, weak link expulsion type cartridge fuses are supplied factory installed under oil on a terminal block at the top of the internal core and coil assembly. To replace these fuse elements the tank cover (or maintenance hole cover when included) must be removed. Refer to paragraph 4-4.5 of this bulletin for this procedure.

FIGURE 12

EXPULSION TYPE CARTRIDGE FUSE

3-4 INSPECTION FOLLOWING ENERGIZATION — Following energization of the transformer, check for the following:

a. Confirm the proper secondary voltage by metering.

b. When the thermometer is included, confirm the proper liquid temperature (paragraph 4-3.5.1).

c. Confirm that there are no leaks around bushing parts or weld seams.

d. Confirm that there is no blue glow or partial discharge effect at the high voltage terminations.

PART 4 — MAINTENANCE

4-1 GENERAL — Little maintenance work will normally be required. However, periodic inspections are necessary to detect problems with the unit that might eventually shorten the transformer life.

Extreme caution should be taken to avoid contact with any energized or "live" parts inside the pad mount transformer. Low voltage bushings are always exposed and within arms reach from the compartment opening. High voltage bushings and lightning arresters are exposed on live front designs and are also within arms reach of the compartment opening. Protective clothing, proper line tool equipment and adequate experience with high voltage equipment and related safe work habits are essential to the safety of maintenance personnel.

4-2 ROUTINE INSPECTION SCHEDULE — The frequency of inspection should be determined somewhat by the transformer size, the application and importance of service continuity as experience dictates. Also, local climatic and atmospheric conditions will influence the inspection schedule. The following items should be considered in the inspection program:

ITEMS TO INSPECT

Liquid Temperature
Load Amps and Volts
Oil Leaks and Liquid Level
Condition of Metal Surfaces
Cleanliness of Bushings
Oil Sample and Tests
Ground Connections and Resistances
Pressure Relief Diaphragm or Valve

4-3 MAINTENANCE OF EXTERNAL FEATURES

4-3.1 Exterior Finish — The tank and compartment exterior metal should be checked periodically for rust spots, oil and excess dirt build up and any damaged areas. Rust spots should be cleaned to bare metal and repaired with one primer coat and two finish coats of paint color Munsell No. 7.0GY3.29/1.5. All oil and excess dirt build up should be removed to maximize the tank wall and radiator cooling effectiveness. Any continued build up of oil should be checked to determine if there is an oil leak.

Damaged areas should be corrected as necessary. Bent doors and sill parts can be replaced in the field. A few bent radiators will not significantly effect the transformers cooling efficiency or life. Major radiator or corrugate material damage must be repaired at the factory or at a qualified repair shop.

Hair-line cracks or creases in the tank exterior can be field repaired by application of an epoxy patch kit or by welding. Depending on size or location of the damaged area, lowering the internal liquid level prior to the repair may not be necessary. Consult Square D Company for information on repair kits or specific welding applications.

4-3.2 Oil Leaks — Liquid coolant leaks are rare but if detected, must be repaired at once to avoid the liquid level dropping below energized parts, creating a possibility of flashover or tank overheating. If required, the transformer must be refilled to its proper operating level (refer to paragraphs 4-3.5.2 and 4-4.4).

4-3.2.1 Small pin-hole leaks in the exterior metal, weld seam, etc., resulting in slow dripping can be repaired with a lifetime durable epoxy patch kit. De-energizing the transformer is recommended while even working on the outside tank wall or radiators. A temporary oil stick is applied before the epoxy which in most cases eliminates the need for a vacuum pump to stop the oil leak while the epoxy is being cured. If a vacuum pump is used, the transformer must first be de-energized. Detailed instructions are included with the epoxy repair kit (see Figure 13).

FIGURE 13
REPAIR KIT

Welding of small leaks can also be accomplisted in the field on de-energized transformers, although care must be taken to avoid penetrating the metal thus creating a more serious leak. Welding on radiator metal is not recommended due to the thinner gauge material. A vacuum pump applied to the one inch filter press connection, located inside the low voltage compartment, will be necessary to stop the leak during the welding process.

4-3.2.2 Some bushing leaks at the tank wall may be corrected by tightening the external bushing clamp bolts. Verify that the bushing gasketing material is aligned properly and that all clamping bolts are evenly tightened. If there is a leak at the tip of a high voltage bushing, correct the leak by tightening the metal terminator part of the bushing.

CAUTION:

DO NOT EXCEED 40-60 IN-LBS TORQUE ON BUSHING CLAMP BOLTS OR TERMINALS TO AVOID CRACKING THE BUSHING MATERIAL.

4-3.3 Electrical Connections — Cable terminals on high and low voltage bushings can become loose over a period of time and changing temperatures if not initially tightened to the proper torque or if subjected to unusual stresses. Loose connectors, particularly on the higher current low voltage spades, can create overheating resulting in permanent cable or bushing damage. Periodically check the terminals to insure a rigid cable installation. Proper torque values are recommended by the connector manufacturer and are normally found printed on the lug carton or an accompanying instruction sheet.

4-3.4 Bushings — Inspect the bushing porcelain periodically and keep it free from dust and dirt. In locations where abnormal conditions prevail, such as sand storms, salt deposits, cement dust, acid fumes, etc., a special hazard may exist. The bushings and other porcelain insulation material should be wiped clean with a dry cloth regularly to avoid surface accumulation which may result in flashover.

4-3.5 Accessories (Optionally Supplied) — Maintenance accessories such as the liquid temperature and level indicators, pressure vacuum gauge, pressure relief valve and pressure relief diaphragm, and drain and sampler valve, require no maintenance except to be replaced in the event of accidental damage. Each gauge should be monitored on a regular basis to insure that internal pressures, liquid level and temperature are within design limits described below.

4-3.5.1 Dial Thermometer (Figure 14) — The liquid temperature indicator is a dual type precision instrument with an indicator pointer coupled to a bi-metallic element. The bi-metallic element fits into a sealed drywell located under the oil level in the low voltage compartment. This device can be easily installed or removed from the drywell without exposing the transformer oil.

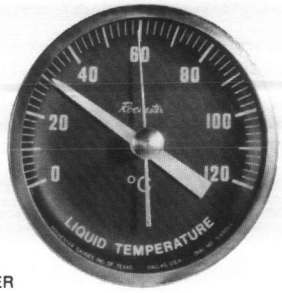

FIGURE 14
DIAL TYPE THERMOMETER WITH MAXIMUM TEMPERATURE INDICATOR

The dial is calibrated in degrees centigrade and has a red maximum indicating pointer which indictates the maximum temperature reached since the last resetting. The indicator pointer is reset by turning the middle knob on the dial face.

Temperature limits for any specific condition of loading should be in accordance with ANSI C57.92, GUIDE FOR LOADING IMMERSED DISTRIBUTION TRANSFORMERS. 95°C is the maximum average value of temperature reading for any 24 hour period which if not exceeded will insure a normal transformer life.

If specified, hermetically sealed dry type switch contacts are supplied inside the dial thermometer and brought out through control wires at the bottom of the dial. A variety of contact arrangements is available. Consult Square D for each specific application.

4-3.5.2 Liquid Level Gauge (Figure 15) — The liquid level gauge is a precision dial type instrument with the indicating pointer magnetically coupled to an internal float arm. The level gauge is located in the low voltage compartment at the normal 25°C fill line. This complete device including the gauge and float arm can be installed or removed in the field, although removing the tank cover or hand hole may be necessary.

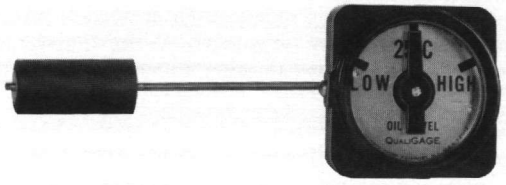

FIGURE 15
MAGNETIC LIQUID LEVEL GAUGE

The liquid level rises and falls around the 25°C level mark depending on the ambient and transformer loading conditions. On an energized transformer, a liquid level reading of "LOW"' is not acceptable as a dangerous flashover condition on internal parts may result. Refer to paragraph 4-4.4 for details concerning filling the transformers with liquid coolant.

A liquid level reading of "HIGH" indicates an abnormally high level of oil in the tank which is most likely a result of an abnormally high ambient temperature. If the reading does not return to normal when the ambient is reduced, consult Square D Company.

If specified, hermetically sealed dry type switch contacts are supplied inside the level gauge housing with control wires brought out at the bottom of the gauge. The controls will operate if the liquid level drops to the "LOW" setting or below. Contact Square D for each specific application.

4-3.5.3 Pressure Vacuum Gauge (Figure 16) — The pressure vacuum gauge is a dial type precision instrument calibrated in pounds per-square-inch and has a dial reading of ± 10 PSI maximum. This gauge is located in the low voltage compartment near the top above the liquid level. It is easily installed or replaced by tightening or loosening the gauge from its pipe fitting support.

FIGURE 16
PRESSURE VACUUM GAUGE

The internal air pressure varies with liquid level and ambient conditions. Pressure readings between ± 5 PSI are considered normal as long as there is some variation of readings between changing liquid levels or ambient temperatures.

A "flat" or unchanging pressure reading indicates a defective gauge or a pressure leak. A pressure leak must be corrected to avoid "breathing" of external moist air. This condition over a period of time can destroy the dielectric strength or insulating properties of the liquid coolant. Refer to paragraph 4-4.2 for more detail on locating and correcting a pressure leak. Pressure in excess of ± 5 PSI can be lowered by releasing relief valve.

4-3.5.4 Pressure Relief Valve (Figure 17) — The relief valve is located in the low voltage compartment near the top above the liquid level. The device is threaded into the tank wall to facilitate installation or removal. The valve automatically opens on a build up of internal tank gas pressure of 9 - 11 PSI. Once the pressure is relieved, the device automatically reseals. Internal pressure is relieved manually by applying a hook stick to the valve pull ring and pulling gently.

FIGURE 17
PRESSURE RELIEF VALVE

4-3.5.5 Drain Valve With Sampler (Figure 18) — The one inch drain valve and drain plug with a side mounted ⅜ inch sampler fitting is located at the bottom of the tank wall in the low voltage compartment. Replacement or addition of this valve to a tank filled with liquid is possible although not recommended. Consult Square D for this procedure. Paragraph 4-4.4 describes the liquid sampling and draining procedure.

FIGURE 18
DRAIN VALVE WITH SAMPLER

4-4 MAINTENANCE OF INTERNAL FEATURES

4-4.1 General — The transformer will normally not require internal maintenance throughout its life except for periodic sampling of the liquid coolant. The unit is shipped from the factory with the tank pressure sealed. If inspection or repair of internal tank parts does become necessary, then care must be taken to reseal the openings properly on completion of the work.

4-4.2 Locating Pressure Leaks — Each transformer is pressure tested at the factory to insure a pressure tight seal and thus prevent moisture contamination of the liquid coolant. Review paragraph 1-2.2 for initial inspection and methods of verifying the pressure seal. If the seal is broken due to mishandling or other adverse conditions, the leak point may be located and repaired as follows:

Nitrogen is applied through the filling hole in the low voltage compartment. A solution of soap and glycerin is applied to all seams and joints above the liquid level. As the pressure rises up to + 5 PSI any bubbling of the soap solution will pinpoint the location of a pressure leak. The leak may be patched by conventional means such as tightening up devices at the point of leak, applying epoxy patches, or welding.

4-4.3 Sampling The Oil — When sampling the oil utilize a clean and dry dark glass bottle or jar with cork stopper. Do not use rubber stoppers or sealing lids with rubber gasketing. The bottle can be cleaned by washing with non-leaded gasoline followed by strong soap, and rinsed with distilled water prior to drying.

The drain valve or plug is then opened and a small amount of the liquid coolant released in order to flush out the valve and plug opening. Next, a quart sample is taken leaving space in the jar for expansion. The jar must be sealed and forwarded to the nearest testing facility for testing in accordance with ANSI standards. Testing should include the following: Dielectric strength (must be 26 KV or higher), acidity, color, interfacial tension, density and sediment.

4-4.4 Draining and Filling the Tank — This should not be accomplished on energized transformers except by qualified personnel.

If draining or filling the tank becomes necessary, precaution must be taken to avoid contamination of stored oil. Chemically cleaned and dry barrels or storage containers must be utilized. The service work must be performed in a dry environment. Before opening storage containers, they must be allowed to reach the ambient temperature to avoid condensation. Hoses and fittings that are oil-resistant must be utilized to avoid sulphur contamination.

The tank is then drained from the drain valve and plug location into the storage containers. The fill plug must be removed in order to equalize tank pressure while draining. The storage containers must be properly sealed when filled.

Prior to filling the tank, all fittings must be tightly sealed. The tank can be filled through the upper fill plug, or, to avoid aeration of the oil, through the bottom drain valve and plug. The liquid level plug must be removed when filling in order to observe when the proper fill level is reached and to provide venting. Use of a filter press is recommended when filling to insure the oil is free from moisture, air, or solids contamination. The oil quality and tank pressure seal must be tested following this procedure.

4-4.5 Removing and Replacing the Tank Cover — Tank covers may be of the bolted gasketed type or welded on with or without a bolted maintenance hole cover. Regardless of the style, care must be taken to avoid entry of moisture or other contaminants into the tank oil or internal parts.

In order to remove the maintenance hole cover, the nut and bolt on the retaining ring must first be removed. The gasketing is made of a resilient nitrile material which does not require replacement. Before replacing the cover, the contact surfaces of both the gasket and cover must be cleaned. The cover must be aligned to the tank and the bolts evenly tightened to 40-60 IN-LBS torque. The tank pressure seal must be tested following this procedure.

Welded covers can be removed and reinstalled in a repair shop by qualified personnel. Consult Square D Company for this procedure.

NOTES

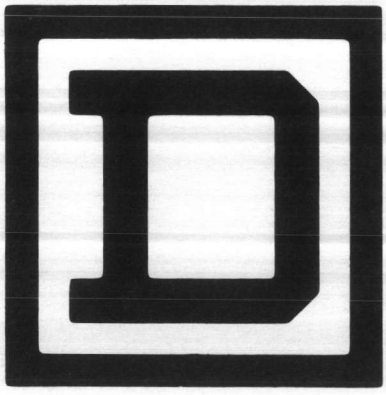

Printed in U.S.A. 3/84 CPS 5M 62 43404-401-38

* * * SQUARE D COMPANY * * *

DISTRIBUTOR: CED -RALEIGH

DIST. ORDER NO.: 6055-JB 161662D

FACTORY NUMBER: 42-04689-30

TYPE OF EQUIPMENT: PANELBOARDS

JOB: APPLIED INSTRUCTION

LOCATION: CAMP LEJEUNE, N.C.

ARCHITECT:

ENGINEER:

ELEC.CONTRACTOR: BRYANT DURHAM

FIELD ENGINEER: BILL HUGHES

HEADQUARTERS ENGINEER: CARROL GRINSTEAD/BW

---

10 COPIES OF DRAWINGS FOR RECORD

DATES SUBMITTED:

1-16-88

---

* * * SQUARE D COMPANY * * *

09/03/87 PANELBOARD RECORD SUMMARY

F.O.# 42-04689-30

JOB: APPLIED INSTRUCTION
LOCATION: CAMP LEJEUNE, N.C.

PAGE	QTY	PANEL MARKINGS	PANEL TYPE
1	1	DP DRAWING NO. PBA-427	QMB
TOTAL	1		

* * * SQUARE D COMPANY * * *

09/03/87 PANELBOARD RECORD SUMMARY

F.O.# 42-04689-31

JOB: APPLIED INSTRUCTION
LOCATION: CAMP LEJUNE, N.C.

PAGE	QTY	PANEL MARKINGS	PANEL TYPE
2	1	PP1 DRAWING NO. PBA-350	NEHB
3	1	LPA DRAWING NO. PBA-350	NEHB
4	2	SP1,SP2 DRAWING NO. PBA-329	NQOB
5	1	1RP1-L DRAWING NO. PBA-329	NQOB
6	1	RP1-R DRAWING NO. PBA-329	NQOB
TOTAL	6		

JOB: APPLIED INSTRUCTION
LOCATION: CAMP LEJEUNE, N.C.

PANEL DESIGNATION: DP
DRAWING NO. PBA-427

F.O.# 42-04689-30
ITEM: A UNIT: 885
DATE: 09/03/87
ENG: BBW

PANEL-TYPE: QMB ... QUANTITY: 1

SYSTEM VOLTAGE: 208Y/120 3 PHASE 4 WIRE

U/L LISTED * SERVICE ENTRANCE EQUIPMENT *

MAINS...MAIN LUGS FRAME SIZE...N/A AMP N/A AMPERE RATING... 600
MAIN CABLE LUGS SIZE...2#3/0-500 MCM AL OR CU
PANEL FEED...BOTTOM

EQUIPMENT GROUND BAR...YES FRONT TYPE.....QM38606TS
SURFACE MOUNTED

BOX CATALOG NUMBER.....QM3860B
HEIGHT... 60 WIDTH... 38 DEPTH...11.50

* * * BRANCH SWITCHES * * *

QTY	AMPS	POLES	AIC	WIRE SIZE (AL OR CU)	TYPE
3	200	3		1#4-300 MCM AL OR CU	(QMB (

SPECIAL INSTRUCTIONS:
J CLIPS

JOB: APPLIED INSTRUCTION
LOCATION: CAMP LEJUNE, N.C.

PANEL DESIGNATION: PP1
DRAWING NO. PBA-350

F.O.# 42-04689-31
ITEM: B UNIT: 887
DATE: 09/03/87
ENG: BBW

PANEL-TYPE: NEHB ... QUANTITY: 1

SYSTEM VOLTAGE: 480Y/277 3 PHASE 4 WIRE

U/L LISTED

MAINS...MAIN LUGS FRAME SIZE...N/A AMP N/A AMPERE RATING... 225
MAIN CABLE LUGS SIZE...1#6-300 MCM AL OR CU
PANEL FEED...BOTTOM

EQUIPMENT GROUND BAR...YES FRONT TYPE.....NH41TS
SURFACE MOUNTED

BOX CATALOG NUMBER.....MH41BE
HEIGHT... 41 WIDTH... 20 DEPTH... 5.75

			* * * BRANCH BREAKERS * * *		
QTY	AMPS	POLES	AIC	WIRE SIZE (AL OR CU)	TYPE
10	20	3	14,000	2#14-10 CU OR AL	(EHB)
2	30	3	14,000	1#14-2 CU OR AL	(EHB)
2		3		SPACE ONLY	(S/O)

JOB: APPLIED INSTRUCTION
LOCATION: CAMP LEJUNE, N.C.

PANEL DESIGNATION: LPA
DRAWING NO. PBA-350

F.O.# 42-04689-31
ITEM: B UNIT: 888
DATE: 09/03/87
ENG: BBW

PANEL-TYPE: NEHB ... QUANTITY: 1

SYSTEM VOLTAGE: 480Y/277 3 PHASE 4 WIRE

U/L LISTED

MAINS...MAIN LUGS FRAME SIZE...N/A AMP N/A AMPERE RATING... 225
MAIN CABLE LUGS SIZE...1#6-300 MCM AL OR CU
PANEL FEED...BOTTOM

EQUIPMENT GROUND BAR...YES FRONT TYPE.....NH35TS
SURFACE MOUNTED

BOX CATALOG NUMBER.....MH35BE
HEIGHT... 35 WIDTH... 20 DEPTH... 5.75

* * * BRANCH BREAKERS * * *

QTY	AMPS	POLES	AIC	WIRE SIZE (AL OR CU)	TYPE
30	20	1	14,000	2#14-10 CU OR AL	(EHB)

JOB: APPLIED INSTRUCTION
LOCATION: CAMP LEJUNE, N.C.

PANEL DESIGNATION: SP1,SP2
DRAWING NO. PBA-329

F.O.# 42-04689-31
ITEM: C UNIT: 891
DATE: 09/03/87
ENG: BBW

PANEL-TYPE: NQOB ... QUANTITY: 2

SYSTEM VOLTAGE: 208Y/120 3 PHASE 4 WIRE

U/L LISTED

MAINS...MAIN LUGS FRAME SIZE...N/A AMP N/A AMPERE RATING... 225
MAIN CABLE LUGS SIZE...1#6-300 MCM AL OR CU
PANEL FEED...BOTTOM

EQUIPMENT GROUND BAR...YES

FRONT TYPE.....MSC38TS
SURFACE MOUNTED

BOX CATALOG NUMBER.....MH38BE
HEIGHT... 38 WIDTH... 20 DEPTH... 5.75

QTY	AMPS	POLES	* * * BRANCH BREAKERS * * * AIC	WIRE SIZE (AL OR CU)	TYPE
22	20	1	10,000	1#12-8 AL OR 1#14-8 CU	(QO)**
8		1		QOB-1P-SPACE-ONLY	(S/O)**

** - THE ABOVE QO, Q1 AND/OR QH BREAKERS ARE QOB, Q1B AND/OR QHB

JOB: APPLIED INSTRUCTION
LOCATION: CAMP LEJUNE, N.C.

PANEL DESIGNATION: 1RP1-L
DRAWING NO. PBA-329

F.O.# 42-04689-31
ITEM: C UNIT: 892
DATE: 09/03/87
ENG: BBW

PANEL-TYPE: NQOB ... QUANTITY: 1

SYSTEM VOLTAGE: 208Y/120 3 PHASE 4 WIRE

U/L LISTED

MAINS...MAIN LUGS FRAME SIZE...N/A AMP N/A AMPERE RATING... 225
MAIN CABLE LUGS SIZE...1#6-300 MCM AL OR CU
PANEL FEED...BOTTOM

EQUIPMENT GROUND BAR...YES FRONT TYPE.....MSC38TS
SURFACE MOUNTED

BOX CATALOG NUMBER.....MH38BE
HEIGHT... 38 WIDTH... 20 DEPTH... 5.75

* * * BRANCH BREAKERS * * *

QTY	AMPS	POLES	AIC	WIRE SIZE (AL OR CU)	TYPE
26	20	1	10,000	1#12-8 AL OR 1#14-8 CU	(QO)**
2	20	2	10,000	1#12-8 AL OR 1#14-8 CU	(QO)**

SPECIAL INSTRUCTIONS:
SUB FEED LUGS
** - THE ABOVE QO, Q1 AND/OR QH BREAKERS ARE QOB, Q1B AND/OR QHB

JOB: APPLIED INSTRUCTION
LOCATION: CAMP LEJUNE, N.C.

PANEL DESIGNATION: RP1-R
DRAWING NO. PBA-329

F.O.# 42-04689-31
ITEM: C UNIT: 893
DATE: 09/03/87
ENG: BBW

PANEL-TYPE: NQOB ... QUANTITY: 1

SYSTEM VOLTAGE: 208Y/120 3 PHASE 4 WIRE

U/L LISTED

MAINS...MAIN LUGS FRAME SIZE...N/A AMP N/A AMPERE RATING... 225
MAIN CABLE LUGS SIZE...1#6-300 MCM AL OR CU
PANEL FEED...BOTTOM

EQUIPMENT GROUND BAR...YES FRONT TYPE.....MSC38TS
SURFACE MOUNTED

BOX CATALOG NUMBER.....MH38BE
HEIGHT... 38 WIDTH... 20 DEPTH... 5.75

* * * BRANCH BREAKERS * * *

QTY	AMPS	POLES	AIC	WIRE SIZE (AL OR CU)	TYPE
26	20	1	10,000	1#12-8 AL OR 1#14-8 CU	(QO)**
2	20	2	10,000	1#12-8 AL OR 1#14-8 CU	(QO)**

** - THE ABOVE QO, Q1 AND/OR QH BREAKERS ARE QOB, Q1B AND/OR QHB

THE FOLLOWING BOXES ARE REFERENCED IN
F.O.# 42-04689-31

MH41BE
PP1

MH35BE
LPA

MH38BE
SP1,SP2

MH38BE
1RP1-L

MH38BE
RP1-R

THE FOLLOWING BOXES ARE REFERENCED IN
F.O.# 42-04689-30

QM3860B
DP

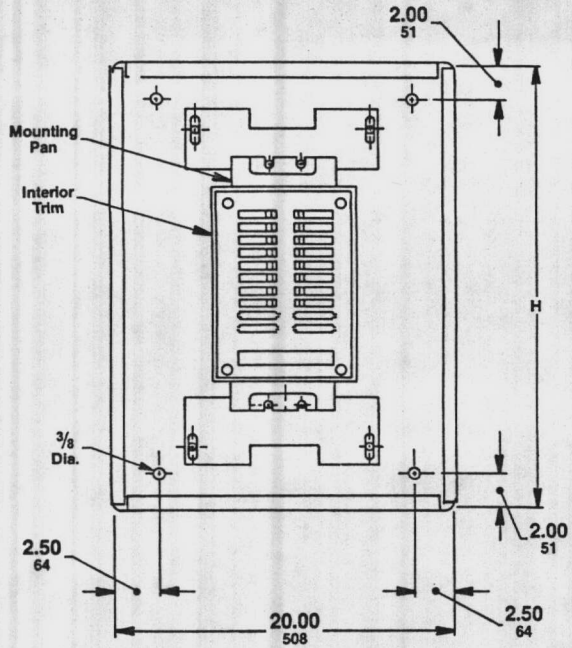

TYPICAL BOX WITH INTERIOR

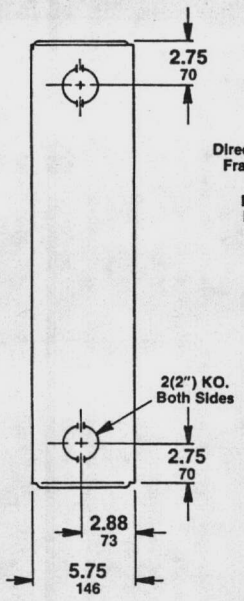

TYPICAL BOX SIDE VIEW

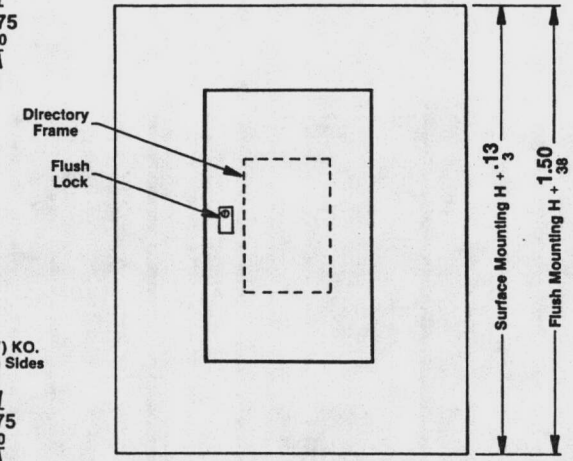

TYPICAL FRONT

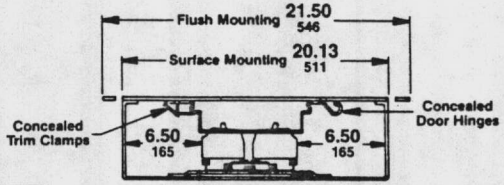

TYPICAL MOUNTING OF QOB BREAKERS

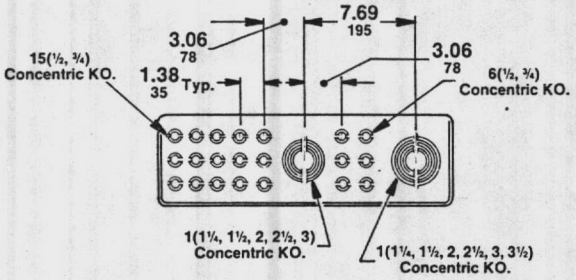

TYPICAL ENDWALL

Maximum Main Lugs Ampere Rating	Maximum Number of Circuits	H	
		IN	mm
100	12	23.00	584
100	24	26.00	660
100	30	29.00	737
225	20	35.00	889
225	42	38.00	965
225	54	44.00	1118
225	66	50.00	1270

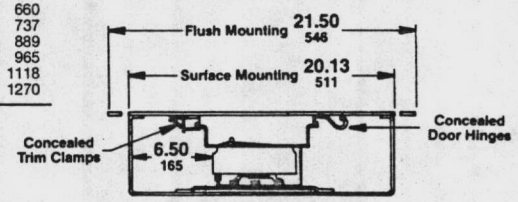

TYPICAL MOUNTING OF Q1B BREAKERS

NOTES

Refer to panelboard schedule for top or bottom feed, service and lug size.

NQOB panelboards are UL listed.

MAINS: Main lugs and gutters suitable for copper or aluminum wire.

BRANCHES: Square D bolt-on QOB and Q1B, 1, 2 and 3-pole, thermal-magnetic circuit breakers. All 15 and 20 ampere single pole QOB breakers are marked "SWD" and are UL listed as switching duty circuit breakers.

BOX: Code gauge galvanized steel.

FRONT: MONO-FLAT® construction with concealed trim clamps and door hinges. Front non-removable with the door locked. Gray baked enamel finish electrodeposited over cleaned phosphatized steel.

LOCK: Flush lock with brushed, stainless steel escutcheon. NSR-251 key change.

GUTTERS:
Side — 6.50" Minimum
End
100A. — Mains — 4.50" Minimum
Opposite Mains — 3.00" Minimum
225A. — Mains — 10.00" Minimum
Opposite Mains — 8.00" Minimum

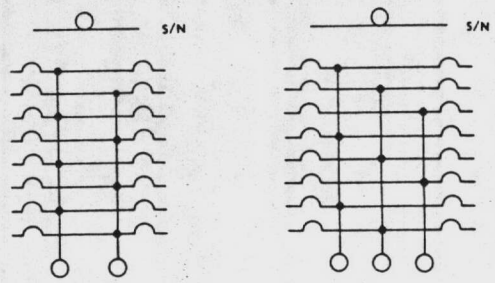

TYPICAL WIRING DIAGRAMS

WHEN KNOCKOUTS ARE SPECIFIED

Refer to DP Catalog Class 1620 for additional information.

Dual Dimensions: INCHES / Millimeters

NO.	KEY	REVISIONS	BY	DATE

NQOB PANELBOARD
1Ø or 3Ø 225 Ampere Maximum Main Lugs

SQUARE D COMPANY
DISTRIBUTION EQUIPMENT DIVISION

DWG. NO. **PBA-329** RP

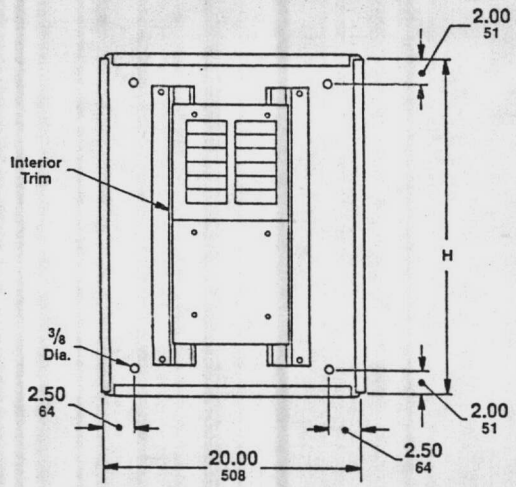

TYPICAL BOX WITH INTERIOR

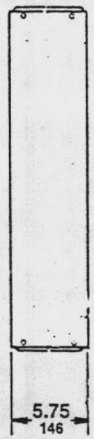

TYPICAL BOX
SIDE VIEW

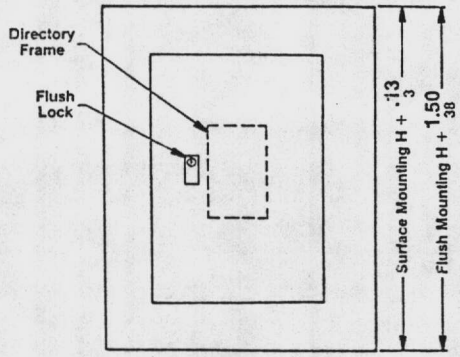

TYPICAL FRONT

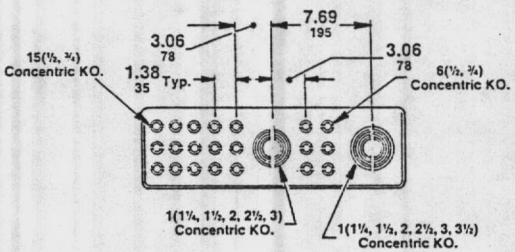

TYPICAL ENDWALL

When knockouts are specified

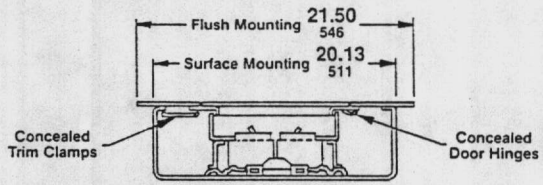

TYPICAL MOUNTING OF EH OR EHB BREAKERS

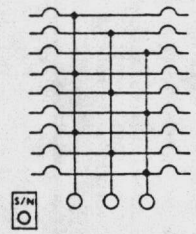

3Ø 4W, 480Y/277V. ac

TYPICAL WIRING DIAGRAM

Maximum Main Lugs Ampere Rating	Maximum Number of Circuits	H	
		IN	mm
125	12	26.00	660
125	18	29.00	737
225	30	35.00	889
225	42	41.00	1041

NOTES

Refer to panelboard schedule for top or bottom feed, service and lug size.

NEHB panelboards are UL listed.

MAINS: Main lugs and gutters suitable for copper or aluminum wire.

INTEGRATED EQUIPMENT RATING: UL listed short circuit current rating of 14,000 rms symmetrical amperes at 480Y/277V. ac or 65,000 rms symmetrical amperes at 240V. ac maximum.

BRANCHES: Square D plug-on EH and bolt-on EHB, 1, 2 and 3-pole thermal-magnetic circuit breakers. All 15 and 20 ampere single pole EH and EHB breakers are marked "SWD" and are UL listed as switching duty circuit breakers.

Breaker Type	Ampere Rating	No. of Poles	Max. ac Voltage	UL Listed Interrupting Rating RMS Sym. Amperes
EH or EHB	15-30	1	277	14,000 @ 277V. ac 65,000 @ 120V. ac
	15-60	2	480Y/277	14,000 @ 480Y/277V. ac 65,000 @ 120/240V. ac
	15-60	3	480Y/277	14,000 @ 480Y/277V. ac 65,000 @ 240V. ac
EHB	70-100	2	480Y/277	14,000 @ 480Y/277V. ac 65,000 @ 120/240V. ac
	70-100	3	480Y/277	14,000 @ 480Y/277V. ac 65,000 @ 240V. ac

BOX: Code gauge galvanized steel.

FRONT: MONO-FLAT® construction with concealed trim clamps and door hinges. Front non-removable with the door locked. Gray baked enamel finish electrodeposited over cleaned phosphatized steel.

LOCK: Flush lock with brushed, stainless steel escutcheon. NSR-251 key change.

GUTTERS:
Side — 6.00" Minimum
End
100A. — Mains — 6.00" Minimum
Opposite Mains — 3.50" Minimum
225A. — Mains — 7.00" Minimum
Opposite Mains — 5.00" Minimum

Refer to DP Catalog Class 1660 for additional information.

Dual Dimensions: INCHES / Millimeters

NO.	KEY	REVISIONS	BY	DATE

NEHB PANELBOARD
480Y/277V. ac Maximum
3Ø, 4W., 225 Ampere Maximum Main Lugs

SQUARE D COMPANY
DISTRIBUTION EQUIPMENT DIVISION

DWG. NO. PBA-350 RP

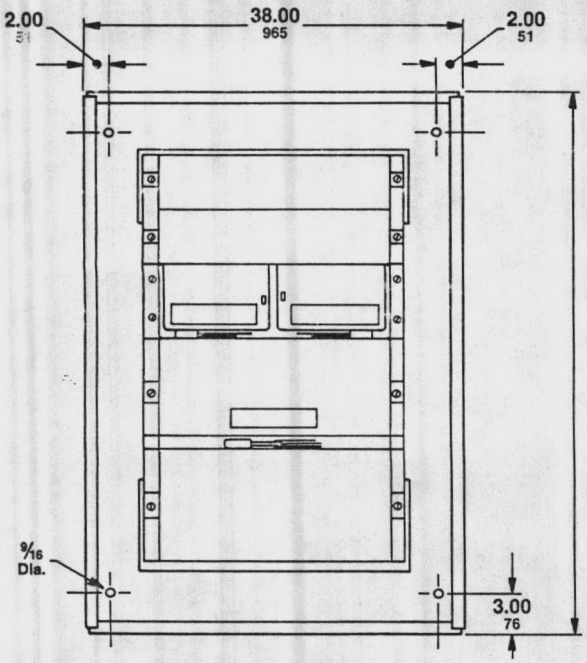

TYPICAL BOX WITH INTERIOR

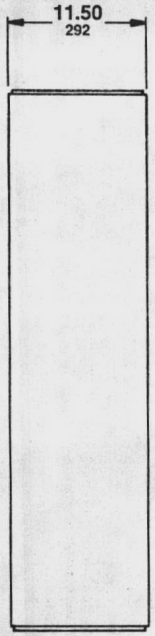

TYPICAL BOX SIDE VIEW

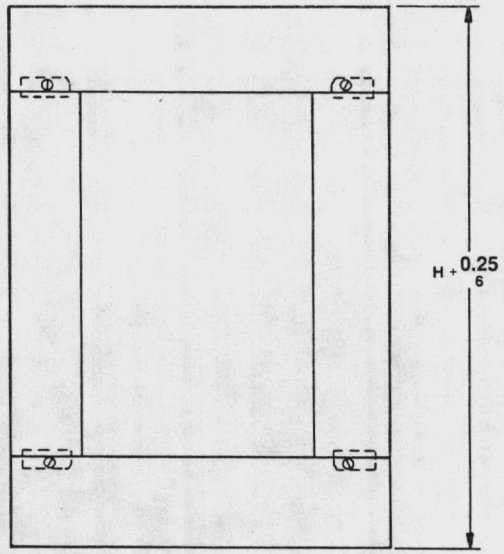

TYPICAL FRONT

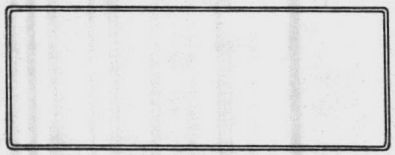

TYPICAL ENDWALL

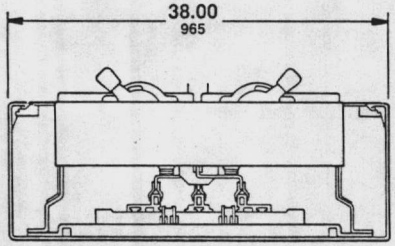

TYPICAL SECTION

Maximum Main Lugs Ampere Rating	Branch Switch Mounting Space (Inches)	H	
		IN	mm
600	30	60.00	1524
1200	30	75.00	1930
600	45	75.00	1930
1200	45	90.00	2286
1600	45	96.00	2438
600	60	90.00	2286

NOTES

Refer to panelboard schedule for top or bottom feed, service and lug size.

QMB panelboards are UL listed.

MAINS: Main lugs and gutters suitable for copper or aluminum wire.

BRANCHES: Square D dead front, quick-make, quick-break, type QMB.

BOX: Code gauge steel with removable endwalls, without knockouts. Gray baked enamel finish.

FRONT: Code gauge steel. Four-piece, without door. Gray baked enamel finish.

GUTTERS:
Side — 7.50" Minimum
End
Opposite Main Lugs — 600A. — 8.00" Minimum
800A. — 10.00" Minimum
1200A. — 14.00" Minimum
1600A. — 16.00" Minimum
Main Lugs — 600A. — 14.00" Minimum
800A. — 16.00" Minimum
1200A. — 24.00" Minimum
1600A. — 26.00" Minimum

Fuses not furnished by Square D Company.

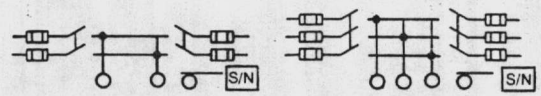

1Ø 2W, 600V. (Omit S/N)
1Ø 3W, 120/240V.
1Ø 2W, 240V. (Omit S/N)
2W, 250V. dc (Omit S/N)
3W, 125/250V. dc
3Ø 3W, 240V. Gr. BØ
3Ø 3W, 480V. Gr. BØ

3Ø 3W, 240V. (Omit S/N)
3Ø 3W, 480V. (Omit S/N)
3Ø 3W, 600V. (Omit S/N)
3Ø 4W, 120/208V.
3Ø 4W, 277/480V.

TYPICAL WIRING DIAGRAMS

Refer to DP Catalog Class 4620 for additional information.

Dual Dimensions: INCHES / Millimeters

NO.	KEY	REVISIONS	BY	DATE

QMB PANELBOARD
1Ø or 3Ø Main Lugs
800 Ampere Maximum Branch Switch

SQUARE D COMPANY
DISTRIBUTION EQUIPMENT DIVISION

DWG. NO. PBA-427 RP

TAB PLACEMENT HERE

DESCRIPTION:

Section II

☑ **Tab page did not contain hand written information**

☐ **Tab page contained hand written information**
***Scanned as next image**

Confidential Records Management, Inc.
New Bern, NC
1-888-622-4425
9/08

JANUARY, 1986

SERVICE BULLETIN
2700-1

INSTALLATION/MAINTENANCE MANUAL

POWER-STYLE®

Switchboards

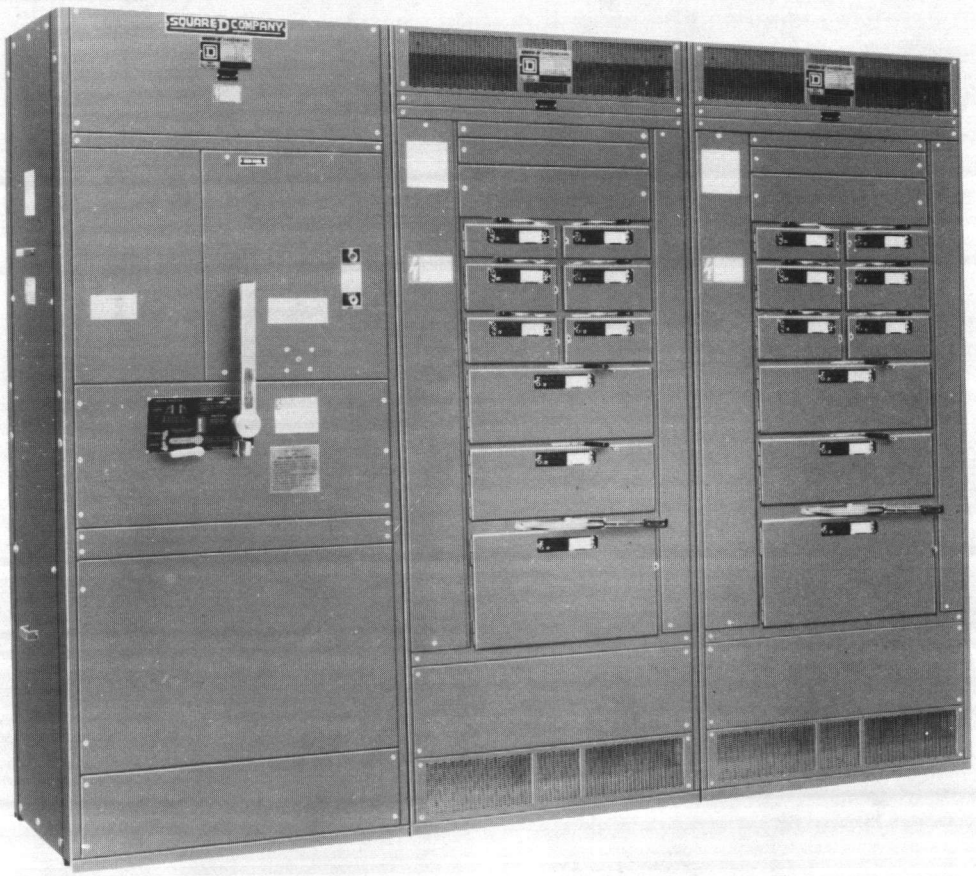

SQUARE D COMPANY

TABLE OF CONTENTS

Page

I. **INTRODUCTION** 3

II. **GENERAL** 3
- A. Receiving 3
- B. Handling 3
- C. Storage 4

III. **INSTALLATION** 4
- A. Location 4
- B. Foundation Preparation 4
- C. Switchboard Preparation 4
- D. Positioning Shipping Sections 4
- E. Installing Switchboard Sections 5
- F. Joining Shipping Section Frames 5
- G. Through Bus Splice Connections 5
- H. Ground Bus Splice Connections 6
- I. Grounding and Bonding 6
- J. Busway Connections 7
- K. Conduit Area 7
- L. Cable Pulling 8
- M. Cable Terminations 8
- N. Cable Bracing 8
- O. Ground Fault Protection Systems 8

IV. **PRE-ENERGIZING CHECK-OUT PROCEDURE** 8

V. **ENERGIZING THE SWITCHBOARD** 9

VI. **MAINTAINING THE SWITCHBOARD AND COMPONENTS** 10
- A. General Inspection 10
- B. Bus Bar Joints and Lug Terminations 10
- C. Automatic Transfer Switches 10
- D. BOLT-LOC® Bolted Pressure Contact Switches 10
- E. Molded Case Circuit Breakers 11
- F. I-LINE® Molded Case Circuit Breakers 12
- G. PE Solid State Circuit Breakers 12
- H. QMB Fusible Switches 13
- I. QMB Combination Motor Starters 14
- J. Ground Fault Protection Systems 15

VII. **ADVERSE CIRCUMSTANCES** 15
- A. Short Circuits 15
- B. A Water Soaked Switchboard 16

TABLES I, II, III, IV 17, 18

SWITCHBOARD MEGGERING CHART 19

SERVICE BULLETINS 20

I. INTRODUCTION

This manual contains instructions for the proper installation, operation and maintenance of POWER-STYLE® switchboard equipment supplied by Square D Company. It is recommended that the purchaser's engineering, installation and operating staff supervisors familiarize themselves with this manual and become acquainted with the appearance and characteristics of each piece of equipment mounted or contained in the switchboard.

The following instructions and procedures are applicable to all Square D switchboard installations. When special features or non-standard components are incorporated in the switchboard, the necessary detailed instructions for these components are included elsewhere in the instruction material holder.

II. GENERAL

Every POWER-STYLE switchboard is carefully inspected and packaged at the assembly plant. Construction is checked, both structurally and electrically, for compliance with all specifications, codes and standards. After a complete inspection, the switchboard is readied for shipment. Depending on its size and the handling facilities available at the job site, the switchboard is divided into shipping sections of one or more vertical sections and placed on wooden pallets. Each shipping section is then individually packaged to minimize the possibility of damage during shipment. The Factory Order Number, an identification number, and the shipping weight are plainly marked on each shipping section. A list of the contents of each is included with the shipping papers.

A. RECEIVING

When the switchboard reaches its destination, the packing list should be checked against the equipment actually received to make sure the order and shipment are complete. Claims for shortages or other errors must be made in writing to Square D within 30 days after receipt of shipment, and failure to give such notice shall constitute unqualified acceptance and a waiver of all such claims by the purchaser.

Immediate inspection should also be made for any damage which may have occurred during transit. If damage is found or suspected, file claims as soon as possible with the carrier and notify the nearest Square D Company representative. Delivery of the equipment to a carrier at any of the Square D plants or other shipping point constitutes delivery to the purchaser and, regardless of freight payment, title and all risk of loss or damage pass to the purchaser at that time.

B. HANDLING

The switchboard must be handled properly to avoid injury to personnel and damage to equipment. Adequate facilities for handling the switchboard should be available at the installation site. Be sure to verify the lifting capacity of the crane or other equipment available. The actual shipping weight of each shipping section is provided on the packing list. The following is a description of the recommended handling methods for indoor and rainproof switchboards.

1. Indoor Switchboards
   a. **Lifting angles are furnished as standard on each 24″ deep shipping section when deemed appropriate.** Deeper switchboards may also have lifting angles if the weight limit is not exceeded. Follow the instructions on the label supplied on each shipping section (See Figure 1). This label includes illustrations for the proper use of lifting angles.

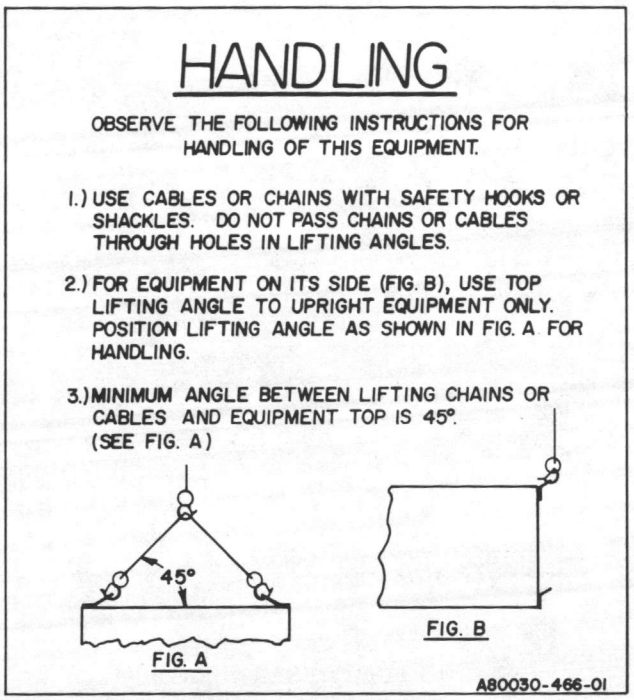

Figure 1

   b. When lifting angles are not supplied, rollers, slings or other means of handling the shipping section are necessary. The label shown in Figure 2 is affixed to each of these shipping sections. The pallets furnished with these sections can be moved on rollers without removing the shipping section from the pallet. The pallet is also wide enough for the shipping section to be lifted with a fork truck. All switchboard sections are furnished with base channels which are also suitable for use with rollers.

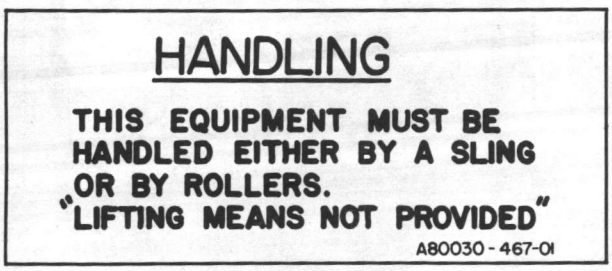

Figure 2

   c. When a shipping section that is not equipped with lifting angles must be elevated to another level, a crane equipped with a sling arrangement of chain or wire cable with safety hooks and shackles may be used. The sling should be wrapped completely around the switchboard and pallet as shown in Figure 3. The pallets used on large shipping sections 36″ in depth and larger may be used with a fork truck if one is available at the installation site.

CAUTION: IN EACH OF THE ABOVE CASES, SPECIAL CARE SHOULD BE TAKEN TO STEADY THE SHIPPING SECTION TO PREVENT TIPPING.

©Square D Company, 1985

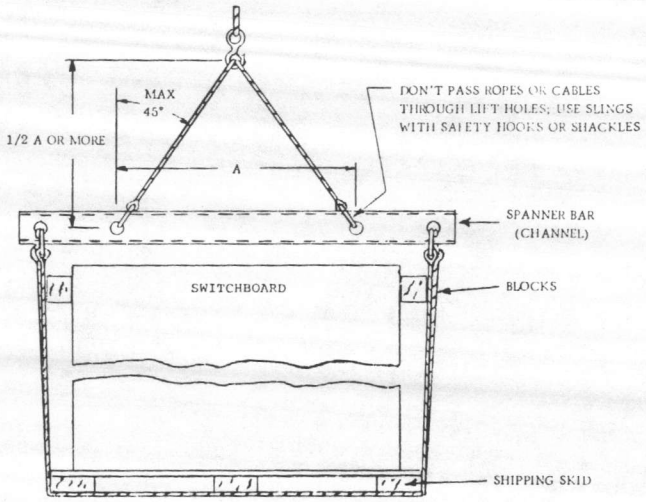

Figure 3
SWITCHBOARD IN SLING RIGGING

2. Rainproof Switchboards

Rainproof switchboard shipping sections are not provided with lifting angles. Rollers, slings or other means of handling must be used. Care must be taken to prevent damage to the drip hood and the door when handling the section. A label is supplied on each shipping section to warn against lifting from the front edge of the switchboard (See Figure 4).

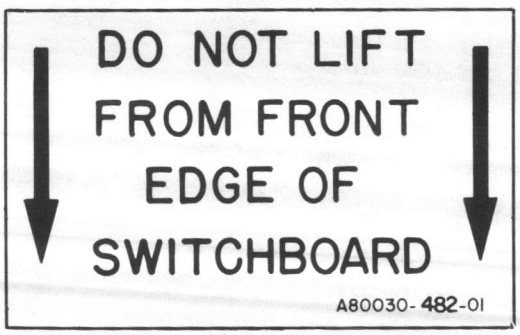

Figure 4

C. STORAGE

If the switchboard is to be stored for any length of time prior to installation, replace the packing for protection during that period. Where conditions permit, leave the packing intact until the switchboard is at its final installation site. If the packing is removed, cover the top and openings of the equipment during the construction period to protect them against dust and debris. In any case, the switchboard should be stored indoors if at all possible.

If the switchboard must be stored temporarily outdoors, there is a danger of harmful condensation to the inside of the switchboard. It is mandatory that portable electric heating of approximately 250 watts per vertical section be installed in both indoor and rainproof enclosures for adequate protection. Cover the indoor enclosure with a tarp or plastic to keep out rain and dust.

III. INSTALLATION

Proper installation of POWER-STYLE® switchboards is important to assure proper operation of all component parts of the switchboard. Study the associated instruction books and all drawings carefully. In most cases, all drawings will be sent to the purchaser previous to shipment of the switchboard to enable adequate advance planning.

A. LOCATION

Find the designated area on the building floor plan where the switchboard is to be installed. If this area is not specified, the location chosen for installation should provide working clearances that comply with Article 110-16 of the National Electrical Code. 24″ deep switchboards are designed for total front accessibility. Larger 36″, 48″ and 54″ deep switchboards are rear accessible and require rear aisle space. If the switchboard is to be used as service entrance equipment, it should be located as close as possible to the incoming service of the building.

B. FOUNDATION PREPARATION

The floor or foundation must be strong enough to support the weight of the switchboard without sagging. A concrete floor is preferred, with a level mounting pad raised about 2 or 3 inches above the general floor level. The surrounding floor area should be gently sloped toward a drain.

POWER-STYLE® switchboards are assembled on true and level floors at the assembly plant. Therefore, to assure correct bus bar alignment, it is imperative that the mounting pad or final installation site be smooth and level. If parallel steel floor channels are to be imbedded for mounting the switchboard, extra care should be taken that they are level over their entire length to avoid distortion of the switchboard structure. Each channel should be level with the finished floor.

At the time the foundation is poured, provisions must be made for the conduits which carry the main cables, control wiring and ground cable when these conduits enter the switchboard from below. The bottom view in the approval drawings shows the available conduit area for correct layout. Conduits should project above the finished floor approximately two inches. However, it will simplify moving the shipping sections into place if the conduits are flush with the concrete surface and the appropriate extension sleeves added after the sections are in their final position. Otherwise, it will be necessary to raise the shipping section on timbers or lift it by crane to clear the conduit hubs.

At this time, consideration should also be given to installing conduits for future circuits.

C. SWITCHBOARD PREPARATION

After the switchboard has been moved to its final installation site, each shipping section should be taken off its pallet and stood in the upright position. All packing material should be removed at this time. If the switchboard is equipped with a bottom closure plate in each vertical section, these should also be removed and temporarily set aside.

D. POSITIONING SHIPPING SECTIONS

1. Before the switchboard is moved into final position, the foundation and surrounding area should be swept clean of dirt and debris.
2. Maneuver the shipping section into the desired position using the procedures under "Handling."

3. Care should be taken to lower and locate the section over the conduit stubs to comply with the "Available Conduit Area" as shown in the bottom view of the enclosed record drawings. Otherwise, there may not be sufficient cable bending space to allow proper clearances to other live parts.
4. Level the shipping section.
5. Position each adjacent section taking care to level it and also align it with the previous section.

WARNING: ADJACENT SHIPPING SECTIONS MUST BE LEVELED AND ALIGNED WITH ONE ANOTHER. FAILURE TO ACCOMPLISH THIS WILL RESULT IN POOR ALIGNMENT OF HORIZONTAL MAIN THROUGH BUS AND IMPROPER SPLICE BUS CONNECTIONS WHICH COULD CAUSE A JOINT TO FAIL, RESULTING IN AN ELECTRICAL EXPLOSION AND/OR FIRE.

E. INSTALLING SWITCHBOARD SECTIONS

Each vertical section must be anchored to the floor. Although sections are free-standing, a hard bump or shifting movement could result in damage to the splice bar joints between sections and conduit hubs connected to the sections.

All switchboard sections are equipped with formed steel base channels which run the width of the shipping section. The channels have 1⅛" diameter holes for fastening the section to the floor (See Figure 5). Use ¾" bolts with flat washers and expansion anchors. (Hardware is furnished by the installer.)

After all switchboard sections have been properly joined together and the entire structure is bolted to the floor, the installation of the incoming service conductors and load side cables can begin.

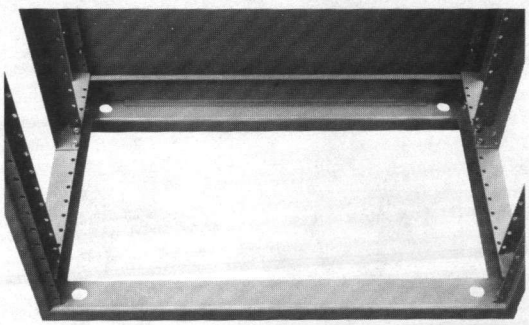

Figure 5
SWITCHBOARD BASE CHANNELS

F. JOINING SHIPPING SECTIONS

The front closure plates and, if possible, the back plates should be removed so that the adjacent shipping section frames can be bolted firmly together. There are ⅜-16 x 1.00 inch steel bolts furnished in a bag for this purpose. Bolts should be placed in the holes provided in the corner channels of the frames. A recommended arrangement is three (3) bolts in the front vertical corner channel and (3) bolts in the back vertical corner channel (See Figure 6). To facilitate assembly, locate the bolt head in the right hand section with the nut washers in the left hand section (See Figure 7).

G. THROUGH BUS SPLICE CONNECTIONS

NOTE: IF SWITCHBOARD CONSISTS OF ONLY ONE SHIPPING SECTION, PROCEED TO GROUNDING AND BONDING PROCEDURE.

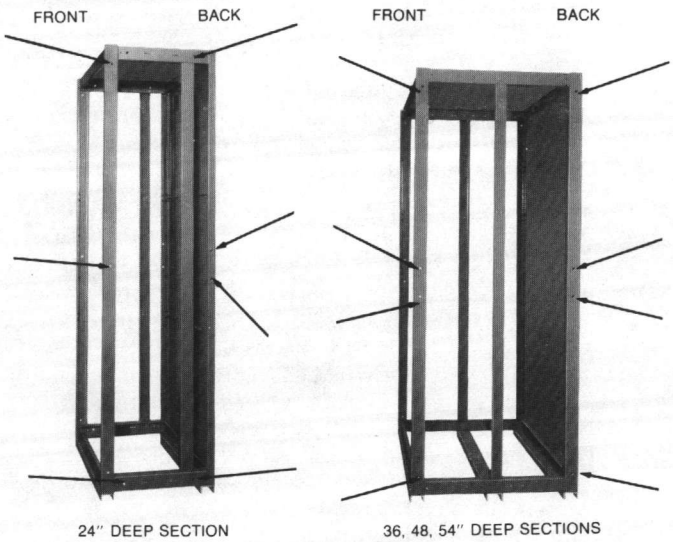

Figure 6
BOLT HOLES IN VERTICAL CORNER CHANNELS

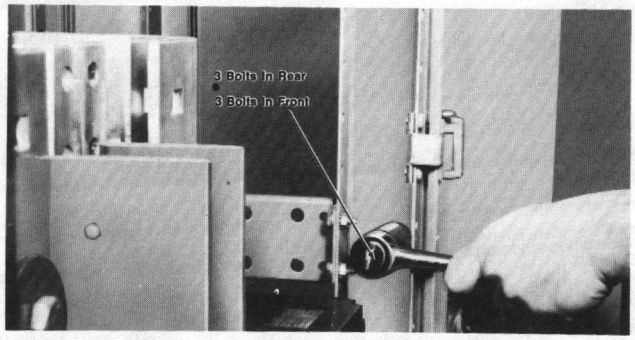

Figure 7

SPLICE BUS KITS WITH INSTRUCTION SHEETS ARE PROVIDED FOR EACH SHIPPING SPLIT. THE INSTRUCTIONS ARE REPEATED HERE FOR YOUR CONVENIENCE.

DANGER: DO NOT INSTALL SPLICE BUS CONNECTIONS WITH SWITCHBOARD ENERGIZED.

1. Remove the front cover plates, and if possible, the back plates to gain access to the main through bus.
2. Check the contact surfaces of the splice bus connectors and through bus to be certain they are clean. If cleaning is required, use a non-abrasive cleaner. The use of an abrasive cleaner may remove the plating and result in a joint failure, causing an electrical explosion and/or fire.
3. The through bus may be single extruded bars per phase or flat rectangular bus bars arranged in multiples per phase. If uncertain of the type of bus bars furnished, check the record drawing and follow the appropriate procedure below:

FLAT-RECTANGULAR THROUGH BUS

1. Check the contact surfaces of the splice bus connectors and through bus to be certain they are clean. If cleaning is required, use a non-abrasive cleaner. The use of an abrasive cleaner may remove the plating, resulting in joint deterioration.
2. If the connection to be spliced has one (1) through bus bar per phase, insert one (1) ½-13 x 1½" hex head bolt with a

conical washer into the elongated holes of the through bus to be spliced. Bolts must point toward the front of the switchboard. If the connection to be spliced has two (2) through bus bars per phase, two (2) splice bus connectors are also required. Position one (1) splice bus connector between the two (2) through bus bars. Next insert one (1) 1/2-13 x 2″ hex head bolt with a conical washer into the elongated holes of the through bus to be spliced. Again, bolts must point toward the front of the switchboard.

NOTE: POSITION ALL CONICAL WASHERS WITH CONVEX SIDE AWAY FROM THROUGH BUS. REFER TO MARKING ON WASHER.

NOTE: ALL NECESSARY HARDWARE IS PROVIDED FOR SPLICE CONNECTIONS. BOLTS PROVIDED ARE OF GRADE 5 HIGH STRENGTH STEEL AND SUBSTITUTIONS ARE NOT ACCEPTABLE.

3. While holding bolts in place from rear side of through bus, position round hole of splice connector over bolts.
4. Place one (1) conical washer and one (1) hex nut over each bolt. Again, position conical washer with convex side away from bus connector.
5. Torque all connections to 70 pounds-foot (840 pounds-inch).

REPEAT STEPS 1 THROUGH 5 FOR ALL THROUGH BUS BARS TO BE SPLICED.

WARNING: FAILURE TO PROPERLY ALIGN AND POSITION SPLICE BUS CONNECTORS OR FAILURE TO APPLY PROPER TORQUE MAY CAUSE A JOINT TO FAIL, RESULTING IN AN ELECTRICAL EXPLOSION AND/OR FIRE.

EXTRUDED ALUMINUM THROUGH BUS

1. Check the contact surfaces of the splice bus connectors and through bus to be certain they are clean. (See Figure 8). If cleaning is required, use a non-abrasive cleaner. The use of an abrasive cleaner may remove the plating, resulting in joint deterioration.
2. Insert square head bolts into the slots of bus bars to be spliced. Two (2) bolts are required for each 1000, 1200 and 1600 ampere connection and four (4) bolts are required for each 2000 through 3000 ampere connection.
   a) Orient rivet heads of splice bus connector toward back of switchboard. (See Figure 8).
   b) Position round hole of splice bus connector over bolt. (See Figures 9 and 10).
   c) Slide bolt completely into slotted end of connector. (See Figures 9 and 10).

NOTE: RIVET HEADS OF SPLICE BUS CONNECTOR MUST NOT BEAR UPON THROUGH BUS CONTACT SURFACE. (SEE FIGURE 11).

3. Place one (1) conical washer and one (1) hex nut over each bolt. Position conical washer with convex side away from bus connector. Refer to marking on washer and Figure 10. Washer must not extend beyond end of splice bus connector.
4. Torque all connections to 40-42 foot-pounds (480-500 inch-pounds).

REPEAT STEPS 1 THROUGH 4 FOR ALL THROUGH BUS BARS TO BE SPLICED.

If fully insulated through bus bars are furnished in the switchboard (they will be wrapped with a black protective insulating material), the splice connections must also be insulated. A kit is provided for this purpose. Follow the instructions included with the kit. If instruction sheets are missing from the kit, contact your local Square D field office.

H. GROUND BUS SPLICE CONNECTIONS

Align and secure the ground bus splice connection between shipping sections. Torque connections to 17 foot-pounds (200 inch-pounds) (See Figure 12).

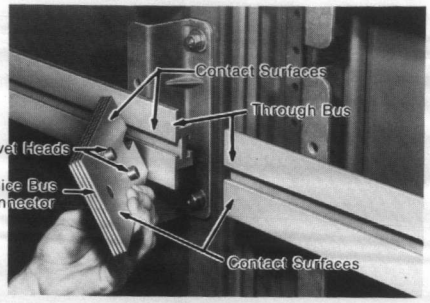

Figure 8

Figure 9

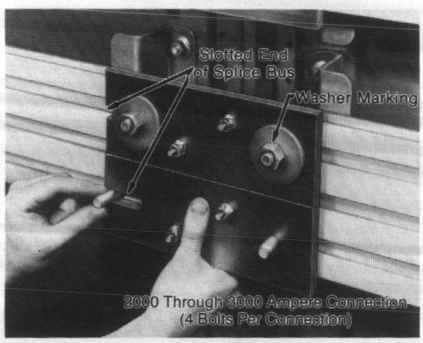

Figure 10

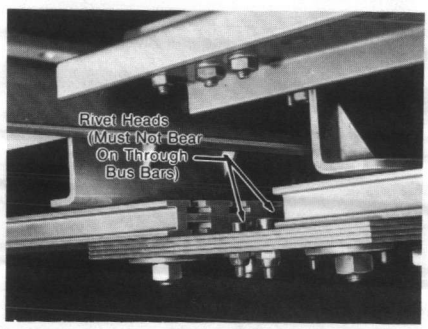

Figure 11

NOTE: PROPER INSTALLATION IS ESSENTIAL FOR SAFE AND PROPER OPERATION OF GROUND FAULT PROTECTION SYSTEM (WHEN FURNISHED).

I. GROUNDING AND BONDING

GROUNDED SYSTEMS USED AS SERVICE EQUIPMENT OR AS A MAIN SWITCHBOARD ON A SEPARATELY DERIVED SYSTEM:

1. Run a grounding electrode conductor from the grounding electrode at the installation site to the ground lug located on the switchboard ground bus (See Figure 13). Select the proper material and size the

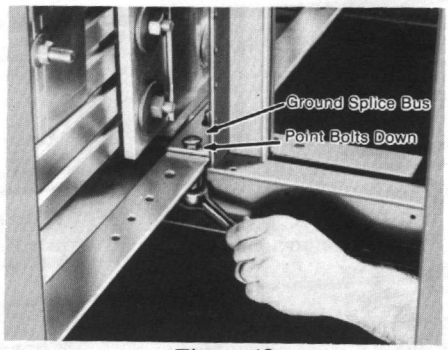

Figure 12

grounding electrode conductor to comply with sections 250-91(a) and 250-94 of the National Electrical Code. Install the grounding electrode conductor as specified in Section 250-92(a) of the National Electrical Code.

2. Install the main bonding jumper between the neutral bus and the ground bus (See Figure 14). Torque bolts as specified in the section on "Through Bus Connections."

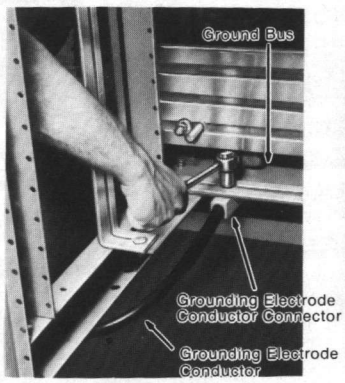

Figure 13

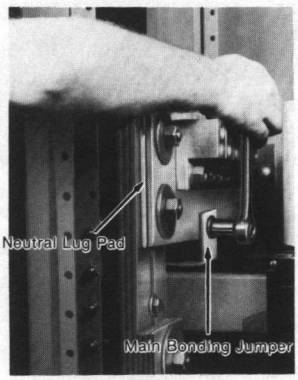

Figure 14

WARNING: IF THE SWITCHBOARD IS TO BE DUAL-FED (DOUBLE-ENDED SYSTEM), THERE ARE TWO MAIN BONDING JUMPERS TO INSTALL.

UNGROUNDED SYSTEMS USED AS SERVICE EQUIPMENT OR AS A MAIN SWITCHBOARD ON A SEPARATELY DERIVED SYSTEM:

1. Run a grounding electrode conductor exactly as described in previous STEP 1.
2. If the system is grounded at any point ahead of the switchboard, an additional grounding conductor must be run from that point and connected to the ground bus as described in Paragraph 250-23(b) of the National Electrical Code.

SWITCHBOARD NOT USED AS SERVICE EQUIPMENT OR AS A MAIN SWITCHBOARD ON A SEPARATELY DERIVED SYSTEM:

1. Use equipment grounding conductors sized according to Paragraph 250-95 of the National Electrical Code to ground the switchboard frame and ground bus.

J. BUSWAY CONNECTION

If a connection for busway is furnished, the busway "dummy" flanged end must be removed. The switchboard can be energized with this flanged end in place if necessary. However, it must be de-energized before installing busway.

1. From inside the switchboard remove the ½" bolts and conical washers that fasten the bus bar flanged end to the busway dummy masonite flanges (See Figure 15).
2. Remove all screws securing the busway dummy flanged end to the switchboard enclosure.
3. Remove the busway dummy flanged end.
4. Install the actual busway flanged end to the bus bar flange connectors provided in the switchboard (See Figure 15). The flanges should be inserted between the switchboard bus bar flange connectors so that the mounting holes in the collar of the flanged end are aligned with the pre-drilled holes in the switchboard enclosure.
5. Line up the holes in the bus bar flanges and insert ½" bolts.

NOTE: ASSEMBLE CONICAL WASHERS AND BOLTS WITH THE CONVEX SIDE OF THE WASHER NEXT TO THE BOLT HEAD. REFER TO THE MARKING "TOP" ON WASHERS.

6. Torque the bolts to 70 foot-pounds.
7. Assemble busway collar to the switchboard enclosure with screws provided.

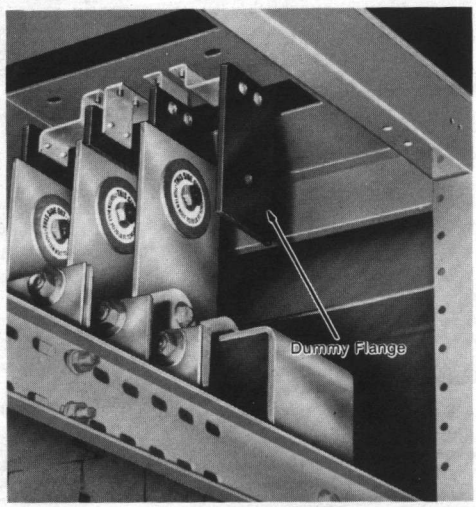

Figure 15
BUSWAY DUMMY FLANGED END

K. CONDUIT AREA

1. Locate and terminate all conduit in the switchboard enclosure in the "Available Conduit Area" as designated on the record drawing.
2. Install conduit properly, with hubs and ring connectors to protect the cables and to prevent condensated water on the conduit from entering the switchboard.

NOTE: BOTTOM CLOSURE PLATES (IF FURNISHED) SHOULD BE DRILLED FOR ANY CONDUIT ENTERING THE BOTTOM OF THE SWITCHBOARD AND RE-INSTALLED AT THIS TIME.

3. Bond all conduit, stubs and ring connectors to the switchboard enclosure with substantial electrical connections.

L. CABLE PULLING

POWER-STYLE® switchboards are constructed to customer specifications for the service entrance cable arrangement (for example, top or bottom feed). The various switchboard components are arranged to give power cable clearance and bending space for both line and load cables. Therefore, all cables entering the switchboard should be pulled and oriented as specified on the wiring diagram provided with the record drawing.

1. Use only cable sizes that are suitable for a proper fit with the corresponding lugs. Consult the record drawing for the range of cable sizes that may be used with the main service entrance lugs and the load size lugs on the various component devices (See Tables III and IV on Page 18).
2. Pull the proper number of line side and load side cables as stated on the record drawing. If the number of load cables is not listed, follow the listing given in Tables III and IV on Page 18.
3. Position the cables inside the switchboard so that they will be free from physical damage.
4. Maintain the maximum possible bending radii and proper clearance to bus bars and grounded parts. Any cables lying or bearing on structural members should be supported to relieve this condition or have suitable protective material placed at the bearing point to protect the cable insulation.
5. Where cables enter or leave the switchboard or pass through any metal which has magnetic properties, be certain to run all phase conductors, including the neutral, through the same opening. Failure to do this may cause overheating.

M. CABLE TERMINATIONS

1. Strip the insulation from the end of the cable the distance required to fit into the full length of the lug well, being careful not to nick or ring the strands. A proper insulation stripping tool or the "pencil shaving" method should be used.
2. Thoroughly clean aluminum cable contact surfaces by wire brushing or scrubbing with an abrasive cloth to remove oxides and foreign matter.
3. Apply an acceptable joint compound to the bare aluminum surfaces.
4. If COMPRESSION-TYPE LUGS are furnished as the main incoming power lugs or on any switch or circuit breaker, they must be unbolted and removed. The crimping of the lugs to the cables can then be accomplished where there is sufficient room to use the crimping tool.
   a. Insert the cable into the lug well and crimp with the recommended crimping tool for the specified number of crimps.

NOTE: SQUARE D (ANDERSON) COMPRESSION LUGS ARE DESIGNED TO BE CRIMPED WITH THE ANDERSON VERSA-CRIMP® PRESSURE-TYPE CRIMPING TOOL. WE DO NOT RECOMMEND THE USE OF ANY OTHER MANUFACTURER'S TOOL ON THESE LUGS AS THEY WILL NOT CRIMP PROPERLY IN TOOLS WHICH USE DIES.

   b. Wipe excess sealant from the connector and insulation.
   c. Remount the lugs, with cables now connected, onto the bus bars, switches or circuit breakers. Tighten bolts to the torque values given in Table I (Page 17).
5. Set screw type lugs may be furnished as main incoming lugs and are standard on molded case circuit breakers and QMB fusible switches. Table II (Page 17) lists Torque Range Values for incoming line cables and main lugs. For connecting load side cables to QMB fusible switches, take the wire size from Table IV (Page 18) and torque according to the corresponding Torque Range Value given in Table II (Page 17). The lugs on molded case circuit breakers should be torqued to BUT NOT EXCEEDING the values listed in Table IV (Page 18).

N. CABLE BRACING

WHEN THE INCOMING POWER CABLES ARE CONNECTED DIRECTLY TO UNPROTECTED LINE SIDE BUSSING, THEY MUST BE SUPPORTED AND RESTRAINED BY THE CUSTOMER FOR THE MAXIMUM AVAILABLE FAULT CURRENT. Follow the instructions for cable bracing located on the inside of a cover plate or door of the main section of the switchboard.

O. GROUND FAULT PROTECTION SYSTEMS

According to Section 230.95(c) of the National Electric Code, "The ground-fault protection system shall be performance tested when first installed . . . A written record of this test shall be made and shall be available to the authority having jurisdiction."

The Square D Company tests all of its Ground Fault Protection systems before leaving the factory. Acknowledgement of this test can be found on a chart located behind or on the front of a door near the relay monitor panel. This chart has testing instructions and a log to record test results on it. See the Ground Fault Protection Equipment instruction bulletin for further details. This can be found in the instructional material holder in the switchboard.

IV. PRE-ENERGIZING CHECK-OUT PROCEDURE

A complete inspection should be carried out **before** the switchboard is energized to assure that all components will function and operate properly. **Every item of the check-out procedure listed below should be completed before energizing.**

1. Check all field-installed bus bar connections. Refer to "Through Bus Splice Connections" section for torque values.
2. Check all accessible connections for tightness.
3. Check all factory and field-installed lug terminations for tightness.
4. Check rigidity of all bus bar bracing.
5. Check the switchboard enclosure for any dents or other damage that reduces electrical clearances inside the switchboard.
6. Remove any foam blocks or other temporary cushioning or retaining material from the electrical devices.
7. Manually open and close all switches, circuit breakers and other operating mechanisms to check for correct alignment and free operation.
8. Electrically operate all electrically operated switches, circuit breakers and other devices equipped with remote operators (not under load). An

auxiliary source of control power may be necessary to accomplish this.

9. Check all relays, meters and instrumentation to verify that all wiring connections are good and the devices operate freely.
10. Factory installed molded case circuit breakers have an adjustable magnetic trip which is shipped on the "LO" setting. The markings between "LO" and "HI" settings represent a range of instantaneous magnetic trip values of five to ten times the circuit breaker's continuous current rating. Proper adjustment of this magnetic trip should be made to provide coordination operation during a fault. All poles are adjusted, using a screwdriver, by the single setting (See Figure 16).

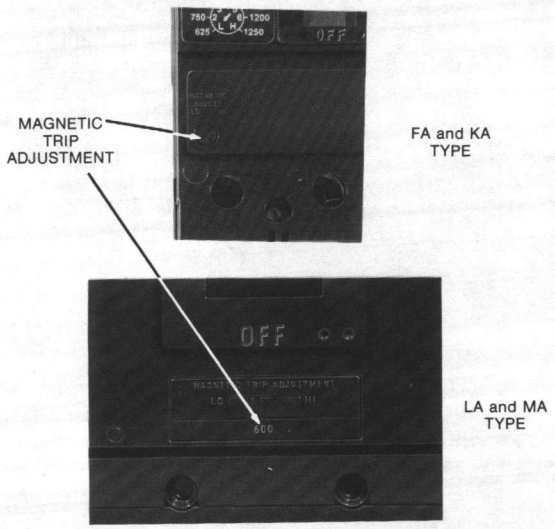

Figure 16
INSTANTANEOUS TRIP SETTING

11. If the switchboard contains a low-voltage power circuit breaker, follow the procedure outlined in the respective operating manual for setting the tripping characteristic curve of the adjustable solid state trip unit.
12. If ground fault protection is furnished, adjust the relay to the desired ground current pick-up setting. The relay is shipped from the factory at the "LO" setting of 100 amperes for the Type GC relay and 200 amperes for the Type GP relay. Relay pick-up range is from 100 to 1200 amperes for the Type GC relay and 200 to 1200 for the Type GP relay.
13. Check the torque on all bolts of the fuses mounted in BOLT-LOC® switches.
14. Check for firm spring tension in the fuse clips of the QMB fusible switches.

WARNING: IF FUSES ARE TO BE FIELD INSTALLED, **DO NOT PRY OPEN OR SPREAD THE FUSE MOUNTING CLIPS** WITH A SCREWDRIVER. THIS COULD CAUSE A LOOSE CONNECTION RESULTING IN OVERHEATING AND NUISANCE FUSE BLOWING.

15. Check all QMB fusible switches to see that the proper fuses with the required interrupting rating and continuous current rating are installed.
16. Check to see that all grounding connections are correctly made. If the switchboard is used as service entrance, double check to see that the main bonding jumper is connected.
17. Conduct a megger test on the switchboard. Megger readings between phases and between each phase and neutral should not be less than one (1) megohm with all switches and circuit breakers closed. If considerably less, do not energize the switchboard. Consult your local Square D field office to help you correct any problems.
18. Check all field installed wiring to see that it is clear of all live parts and secured where necessary to withstand fault currents.
19. Use a vacuum cleaner to remove any dust, scrap wire or other debris.

CAUTION: DO NOT USE AN AIR HOSE TO BLOW OUT THE SWITCHBOARD. THE DUST MAY SETTLE INSIDE RELAYS AND OVERCURRENT DEVICES AND CAUSE OVERHEATING AND SLUGGISH OPERATION.

20. Replace all front, side and rear cover plates and close doors. Check for any pinched wires and make certain all cover plates are aligned and fastened securely.

V. ENERGIZING THE SWITCHBOARD

WARNING: THE INITIAL ENERGIZING OF THE SWITCHBOARD IS A POTENTIALLY HAZARDOUS SITUATION. ONLY QUALIFIED ELECTRICAL PERSONNEL SHOULD BE PRESENT. FAULTS CAN RESULT FROM DAMAGE OR POOR INSTALLATION PRACTICES THAT WENT UNDETECTED DURING THE PRE-ENERGIZING CHECK-OUT PROCEDURE.

1. Turn "OFF" all downstream loads, including other distribution centers such as panelboards, which are separate from the switchboard.
2. Energize the switchboard in the following sequence:
   a. Close the main device(s).
   b. Close each branch circuit breaker or branch fusible switch.
   c. Continue on to each panelboard and load center downstream.
   d. When all overcurrent protective devices have been safely closed, turn on all loads such as lighting circuits, contactors, heaters and motors.
3. After the switchboard has been energized and operating at full load for about 3 or 4 hours, feel the entire outside of the switchboard, including the enclosure, circuit breakers and switches, with the palm of the hand. If the palm cannot stand a temperature for more than 3 seconds, there may be a problem in the switchboard that should be corrected.
   a. Turn off the main power to the switchboard.
   b. Recheck all bus bar and lug connections for tightness.
   c. Re-energize switchboard and turn on downstream loads one at a time to check for possible overloading. Except for BOLT-LOC® switches and solid state circuit breakers, all devices including molded case circuit breakers and QMB fusible switches should not be loaded to more than 80% of their rated current capacity.

d. If a heat problem still appears to exist, contact your local Square D field office.

4. With the switchboard operating at full load, take ammeter readings of each phase to check for a balanced load. If no ammeter or test terminals to current transformers are provided in the switchboard, use an ammeter on the outgoing load cables to take current readings.

VI. MAINTAINING THE SWITCHBOARD

WARNING: POWER TO THE SWITCHBOARD **MUST BE TURNED "OFF" BEFORE** ANY OF THE FOLLOWING MAINTENANCE OPERATIONS ARE PERFORMED. USE A VOLTMETER TO POSITIVELY CHECK THE INCOMING LINE TERMINALS TO BE CERTAIN THAT THE SWITCHBOARD IS **TOTALLY DE-ENERGIZED.**

OBSERVE ALL WARNING AND INSTRUCTION LABELS.

Periodic maintenance on the switchboard includes cleaning, lubrication and the exercising of component parts. The interval between maintenance checks can vary depending upon the amount of usage and the environmental conditions of each installation. The maximum recommended inspection interval should not exceed one year. This definition for periodic maintenance shall apply throughout this manual, unless noted otherwise.

Always inspect the switchboard after a fault (See section on "Adverse Circumstances"). Service bulletins are available through your local Square D field office for the various disconnecting and overcurrent devices mounted in the switchboard.

A. GENERAL INSPECTION

1. Vacuum the switchboard interior to remove any dirt or dust deposits. Do not use an air hose. Pressurized air will only blow dust onto critical electrical contacts.
2. Check the switchboard interior carefully for moisture, condensation buildup or signs of any previous wetness. Moisture can cause insulation failures and rapid oxidation of current carrying parts. Inspect all conduit entrances and cracks between the enclosure panels for dripping leaks. Condensation in conduits may be a source of moisture and must not be allowed to drip onto live parts or insulating material. Take the necessary steps to eliminate the moisture and seal off all leaks.
3. The temperature of non-conducting parts within the enclosure should never exceed 80°C (176°F). The temperature of conducting parts should not exceed 90°C (191°F).
4. Check for signs of rodent nesting in the switchboard. If required, use a good exterminating technique in the general area of the switchboard.

NOTE: EXTERMINATING SUBSTANCES AND CHEMICALS SHOULD NOT BE PLACED OR USED INSIDE THE SWITCHBOARD, AS SOME OF THESE PRODUCTS TEND TO ATTRACT RODENTS.

5. Carefully inspect all devices for any visibly worn-out, cracked or missing parts.
6. Manually open and close switches and circuit breakers several times to make sure they are in proper working order.
7. Check to see that all key interlocks and door interlocking provisions are functional and in proper working order.

B. BUS BAR JOINTS AND LUG TERMINATIONS

WARNING: POWER TO THE SWITCHBOARD MUST BE TURNED OFF BEFORE SERVICING BUS BARS AND LUG TERMINATIONS.

1. Retighten bolts and Keps nuts at bus bar joints if there is any sign of overheating or looseness. Refer to torque values in Table I.
2. Check all bus bar joints and terminal lugs for any pitting, corrosion or discoloration resulting from high temperatures or subjection to high fault condition. If any such damage has occurred, the bus bars or lugs should be cleaned or replaced. If cleaning is required, use a non-abrasive cleaner.

CAUTION: DO NOT SAND OR REMOVE THE PLATING ON ANY ALUMINUM BUS BAR, SPLICE BAR OR TERMINAL LUG. ANY DAMAGED ALUMINUM PART SHOULD BE REPLACED. CONTACT YOUR LOCAL SQUARE D FIELD OFFICE.

3. Check the rigidity of all bus bar bracing and tighten where necessary.
4. Check ALL main incoming lug terminations and ALL lug terminations on the load side of circuit breakers and switches for proper torque every 5 years. Refer to Tables II-IV (Pages 17 and 18).

NOTE: WHERE COMPRESSION-TYPE LUGS ARE USED, CHECK THE TORQUE ON THE BOLTS WHICH FASTEN THE LUGS TO THE BUS BAR OR PHASE CONNECTOR.

5. Re-tighten all control wiring terminations at relays, meters, selector switches, instrument transformers and terminal blocks.

C. AUTOMATIC TRANSFER SWITCHES

It is recommended that the service bulletins for these devices be consulted for all installation, operation and maintenance instructions. The service bulletins are available through your local distributor.

D. BOLT-LOC® – BOLTED PRESSURE CONTACT SWITCH

The BOLT-LOC switch is designed and built with a minimum amount of maintenance procedures required. However, various switch designs such as an electrically tripped or motor operated switch require special adjustment procedures. Service bulletins for these are available through your distributor or Square D field office and provide a detailed description of the switches' operation and complete maintenance information for the specific type of switch. Annual lubrication is recommended.

WARNING: BEFORE ATTEMPTING ANY SERVICE WORK BE SURE THE SWITCH IS COMPLETELY DE-ENERGIZED.

1. Lubrication Instructions: The BOLT-LOC switch, from the factory, has been properly lubricated. However, periodic cleaning and lubrication is

required. Lubrication should be applied to all moving parts. Shell Alvania #2 grease, a multi-purpose lithium based grease, or equivalent, should be used on the hinge area and the clip contact surfaces. A lightweight oil may be used sparingly on the other moving parts of the bolting mechanism. The operating mechanism should be exercised at least once a year to ensure proper operation.

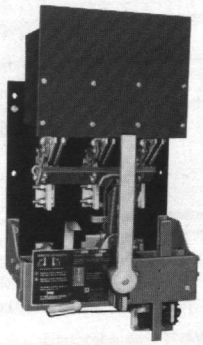

BOLT-LOC® SWITCH

2. Fuse Replacement:
   a. Turn switch handle to the "OPEN" position.
   b. Open fuse door releasing the interlock per instructions on the door.
   c. Observe switch blades to confirm switch is "OPEN".
   d. Remove fuse(s).
   e. Using a non-abrasive cleaner, wipe clean the fuse mounting pads on the switch and the terminals of each new fuse. Be sure to check alignment of fuse terminals before installing.
   f. Install the new fuse(s) using the same bolts and washers as before. Tighten bolts to the recommended torque.

E. MOLDED CASE CIRCUIT BREAKERS

Square D molded case circuit breakers are designed and manufactured as totally sealed units requiring minimum periodic maintenance.

1. General Maintenance
   a. Manually open and close the circuit breaker two or three times.
   b. Trip the circuit breaker by pushing the yellow "push-to-trip" button located on the face of the circuit breaker (Figure 17). This allows testing of alarm switches if built into the circuit breaker or electrical interlocks between two circuit breakers as well as exercising the trip mechanism to assure proper operation.
   c. Check to see that the adjustable magnetic trip is set correctly. Refer to Item #9 of the "Pre-Energizing Check-Out Procedure."
   d. Visually inspect lugs for proper tightness and for corrosion.

2. Changing the Trip Rating

   If requirements are such that a PA, PH or PC frame circuit breaker should have a higher or lower trip rating than supplied, the trip setting may be changed without disturbing any current-carrying connection.

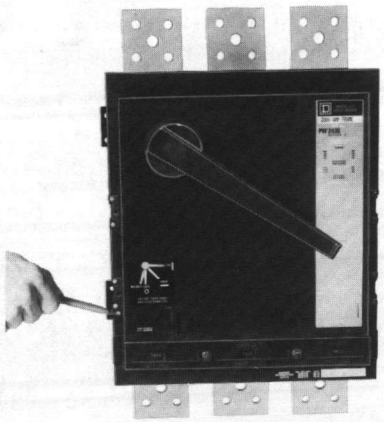

Figure 17

   a. Turn circuit breaker "OFF".
   b. Along the lower front of the circuit breaker is a screw-removable cover protecting the three rating columns. Remove the screws (2 on the front and 2 on each side) and remove the cover (Figure 18).

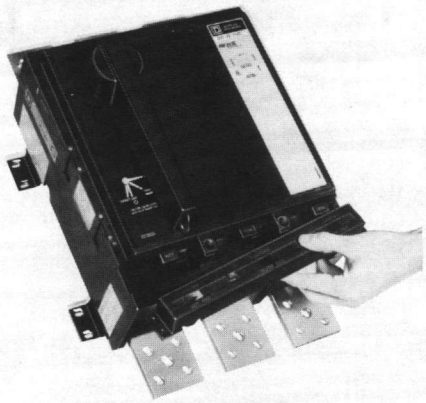

Figure 18
REMOVING RATING COLUMN COVER

   c. Pull the rating columns straight out to remove.
   d. Insert the new rating columns, Figure 19, and replace the cover.

WARNING: DO NOT SET THE TRIP RATING AT A HIGHER AMPACITY THAN THE RATING OF THE BUS BARS IT SUPPLIES. SEE LABEL ATTACHED TO CIRCUIT BREAKER FOR MAXIMUM RATING.

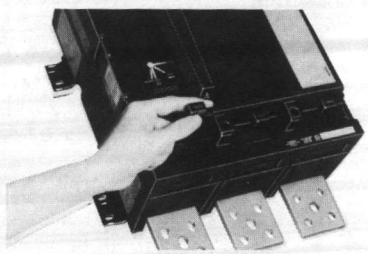

Figure 19
REMOVABLE RATING COLUMNS

F. I-LINE® MOLDED CASE CIRCUIT BREAKERS

For maintenance procedures on I-LINE circuit breakers, refer to the previous section under General Maintenance.

1. Installing an I-LINE Circuit Breaker

CAUTION: DO NOT REMOVE PROTECTIVE LUBRICANT ON THE JAWS. IF REMOVED, APPLY A COATING OF CATALOG #PJC-7201 ELECTRIC JOINT COMPOUND TO THE JAW CONTACT SURFACES.

a. Turn the circuit breaker "OFF" and position the circuit breaker jaws against the bus bar stack (Figure 20). Be sure that the guiding boss located on the bottom of the circuit breaker is lined up with the alignment groove located in the bus insulator base and that the "fingers" of the circuit breaker mounting bracket fit into the key slots on the pan.

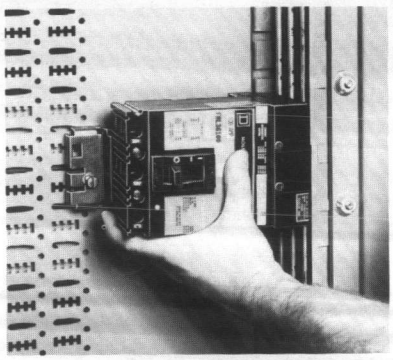

Figure 20

b. Put a screwdriver through the rectangular hole located on the mounting bracket and into the screwdriver slot located on the pan (Figure 21).

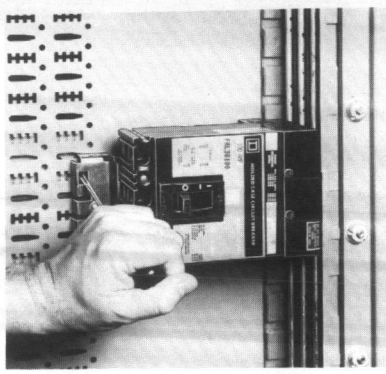

Figure 21

c. Ratchet the circuit breaker firmly onto the bus bars and align the retaining screw with a $^{7}/_{32}$" hole in the pan.
d. Turn down the retaining screw in the circuit breaker mounting bracket and pan (Figure 22). Be sure the screw is tight, but not so tight that it bends the bracket.

2. Removing an I-LINE® Circuit Breaker

a. Turn "OFF" main circuit breaker or switch.
b. Turn "OFF" I-LINE circuit breaker and open wireway cover door.

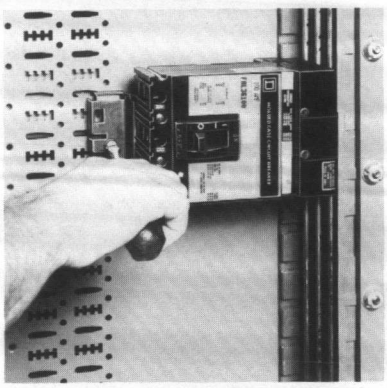

Figure 22

c. Remove load side cables.
d. Loosen retainer screw in circuit breaker mounting bracket. Be sure the screw is completely removed from positioning hole in mounting pan.
e. Place screwdriver through rectangular hole in mounting bracket and into screwdriver slot on interior mounting pan. Ratchet circuit breaker away from the bus bars.
f. Lift circuit breaker out and away from bus bars.
g. Cover openings resulting from removal of I-LINE circuit breakers using blank filler plates with catalog numbers HNM-1-BL (1½") and HNM-4-BL (4½").
h. When an MA (800A frame) or LA (400A frame) I-LINE circuit breaker has been removed from an I-LINE panel, blank extensions as well as blank fillers are required. They are available under catalog numbers HLW-1BL(1½) and HLW-4BL (4½").

WARNING: ALL UNUSED SPACES MUST HAVE BLANK FILLERS INSTALLED BEFORE ENERGIZING PANEL.

G. ME, PE AND SE CIRCUIT BREAKER

The solid state trip circuit breaker combines Square D molded case circuit breaker construction features with advanced electronic technology. The solid state circuitry measures and times the output from internal current monitors. The tripping action is by transfer of the current monitor system output to a directly activated shunt trip.

1. Changing the Rating Plug

This plug establishes the circuit breaker ampere rating. The rating plug, packaged separately, MUST be installed or the current carrying capacity will be greatly reduced. Remove the circuit breaker rating plate, retained by two screws in circuit breaker cover. Re-install the circuit breaker rating (See Figure 23).

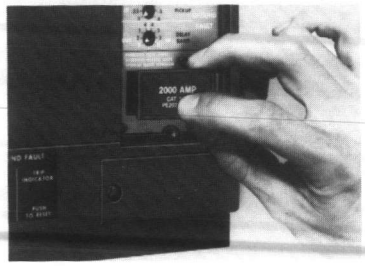

Figure 23
PE RATING PLUG

2. Tripping Characteristics

The tripping characteristics of the PE circuit breaker can be accurately adjusted. Ampere setting, short-time pickup, short-time and long-time delay, instantaneous pickup, ground fault delay and pickup of the optional ground fault feature are all adjustable. Optimize performance by adjusting each to the lowest setting which still provides system coordination. All adjustments are set to the minimum when shipped from the factory.

Settings are accessible by removing the clear plastic cover, held in place by a captive thumb screw. Each slide must be independently set to one of four (4) discrete positions for optimum system coordination. Replace clear plastic cover and re-tighten thumb screws.

3. Ground Fault Trip Test and Indication

A test button and ground fault trip indicator are supplied on solid state circuit breakers with ground fault protection. The indicator button extends out from the circuit breaker when tripping is due to a ground fault. A functional test of the ground fault system can be performed by pressing the test button.

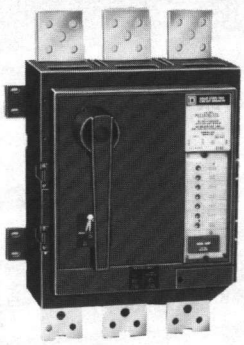

Figure 24
INTEGRAL GROUND FAULT TEST PANEL AND INDICATOR

4. Test Sets

Catalog numbers CBTU1 or CBTM2 are optional accessories that provide a means for checking the circuit breaker's operation.

5. Mounting Feet

The PE circuit breaker is equipped with feet to raise the lug pads away from the circuit breaker mounting plane. DO NOT run cables or steel members through this space. To do so will alter the trip characteristics of the PE circuit breaker.

NOTE: ON 100% RATED PE CIRCUIT BREAKERS, COPPER CABLES HAVING 90°C INSULATION WITH WIRE AMPACITY BASED ON THE 75°C TABLES IN THE NEC MUST BE USED.

H. QMB FUSIBLE SWITCHES

For complete maintenance information, obtain Service Bulletins through your local Square D field office.

1. Switch Maintenance

a. Inspect the switch interior for any broken or cracked parts and replace as necessary.

CAUTION: DO NOT REMOVE THE PROTECTIVE LUBRICANT ON THE JAWS. IF THE JAWS MUST BE REPLACED, APPLY A COATING OF CATALOG #PJC-7201 ELECTRIC JOINT COMPOUND TO THE NEW JAW CONTACT SURFACES.

b. Check the fuse mounting clips for firm spring tension.

c. The "stab-on" jaw assembly on the back of all fusible QMB switches should be checked for signs of overheating.

2. Fuse Replacement

a. TURN THE SWITCH "OFF" before opening door.

b. Observe switch blades to confirm switch is in "OFF" position.

c. Observe all warning labels that specify which type of fuse is to be used. Do not substitute a non-current limiting fuse or in any way attempt to defeat the rejection feature of the fuse clips furnished with the switch.

CAUTION: DO NOT PRY OPEN OR SPREAD THE FUSE MOUNTING CLIPS WITH A SCREWDRIVER. THIS WILL CAUSE A LOOSE CONNECTION RESULTING IN OVERHEATING AND NUISANCE FUSE BLOWING.

INSTALLING QMB FUSIBLE SWITCHES

WARNING: THE MAIN DISCONNECTING DEVICE FOR THESE SECTIONS MUST BE "OFF" BEFORE INSTALLING OR REMOVING QMB SWITCHES.

DO NOT USE A MAIN AS A BRANCH UNIT OR A BRANCH UNIT AS A MAIN. MISAPPLICATION OF QMB SWITCHES CAN RESULT IN ELECTRICAL SHOCK OR BURN.

Installing 30-800 ampere QMB switches in an interior:

1. Turn switch handle(s) "OFF" and position unit plug-on connectors onto the bus bars.
2. Start all four (4) unit mounting screws that mount to the QM panel mounting rails.
3. Tighten the four (4) screws evenly. Unit mounting flange and plug-on connectors must be seated securely.

NOTE: ALL UNUSED SPACES MUST BE FILLED WITH BLANK FILLERS BEFORE ENERGIZING SWITCHBOARD.

I. QMB MOTOR STARTERS

QMB combination motor starters should be checked at least once a year following the maintenance procedures for QMB switches in this manual. If circuit breakers are used for overcurrent protection instead of fusible switches, follow the maintenance procedures for molded case circuit breakers found in this manual. Starter maintenance procedures can be found in Service Bulletin SM-419R. A copy of this bulletin can be obtained from your Square D distributor or Square D field office.

To install a QMB motor starter:

1. Mount the QMB fusible switch in the desired position following the instructions under "QMB Fusible Switches" in the Maintenance section of this manual. Note positions of the switch handles in the illustrations.
2. When mounting the starter units, be sure the switch handles are not adjacent to each other.
3. Position the starter unit next to the QMB switch per the illustrations. Secure unit to mounting rails using ¼-20 x 1.25 screws provided.
4. Install the mechanical interlocks per the illustrations.
5. After completing all wiring to the starter and QMB fusible switch, install the front on the panel.

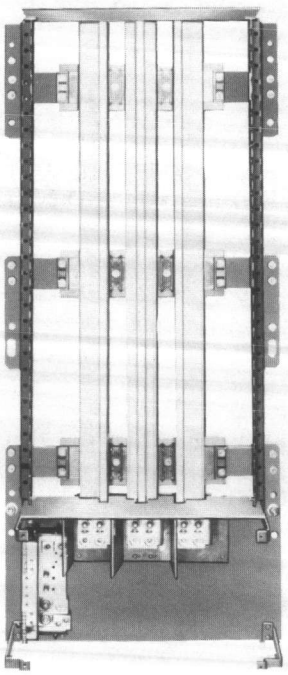

Figure 25
QMB INTERIOR BUS ASSEMBLY

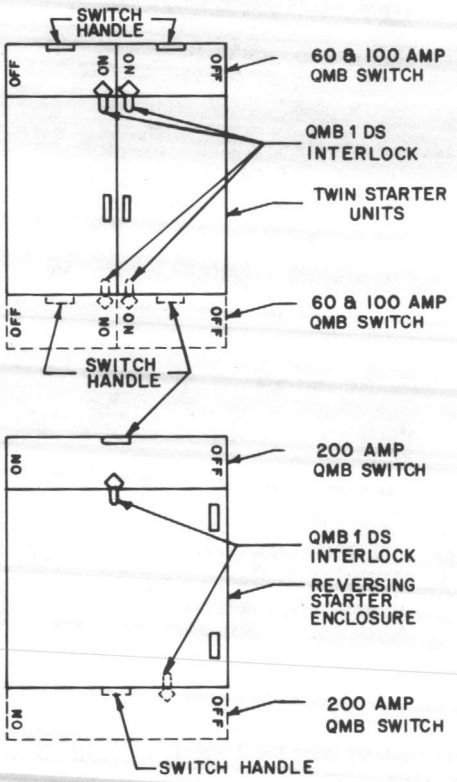

Removing a QMB Switch:

1. To remove a 30-800 ampere QMB switch, turn switch "OFF," take out the four (4) mounting screws which hold the switch to the mounting rails. Then, unplug the switch.

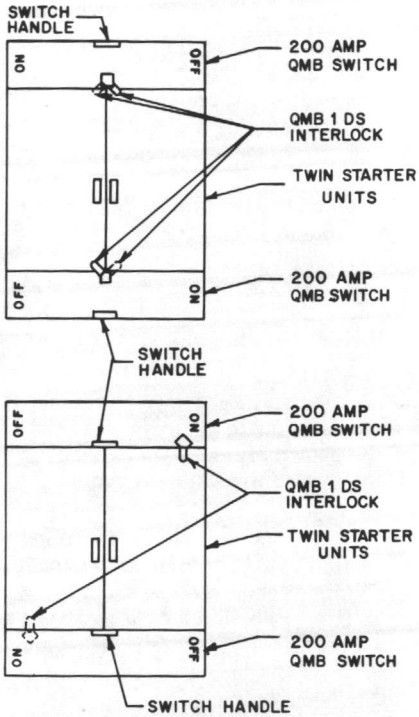

Removing the QMB Motor Starter:

1. Turn "OFF" the main device and the QMB switch before working on the unit.
2. Disconnect load and line side wiring as well as the interconnecting wiring between the starter and switch.
3. Remove the mechanical interlocks shown in the illustrations.
4. Remove ¼-20 x 1.25 screws on each side of the starter which hold the starter to the mounting rails.
5. Remove the QMB fusible switch per the directions in the Maintenance sections of this manual under "QMB Fusible Switches."

J. GROUND FAULT PROTECTION SYSTEMS

The terminal connections on the Ground Fault Protection system should be checked at least once a year for tightness and corrosion. If the system can be tested with or without tripping the main or branch device, directions for testing the system are on the nameplate. Otherwise, testing the Ground Fault Protection System will trip the main or branch device it is connected to. If the Ground Fault Relay fails to operate properly or is subjected to physical or electrical damage, it should be replaced.

VII. ADVERSE CIRCUMSTANCES

A. SHORT CIRCUITS:

IMPORTANT: CONTACT YOUR SQUARE D FIELD ENGINEER AFTER ANY FAULT FOR SPECIAL INSTRUCTIONS BEFORE ATTEMPTING TO RE-ENERGIZE THE SWITCHBOARD.

Normally, the overcurrent protective device in the circuit will prevent any electrical damage except at the actual point of short circuit. However, the high mechanical stress developed by short circuit currents may do damage to conductors and insulation. After any fault, a thorough inspection of the entire system must be made to ensure that no damage to either conductors or insulation has taken place.

During a fault, some organic insulating materials carbonize when subjected to the intense heat of an electrical arc. These carbon deposits must be completely cleaned away before the switchboard is re-energized.

The following are recommendations for cleaning a switchboard:

WARNING: DO NOT WORK INSIDE SWITCHBOARD WHILE IT IS ENERGIZED. HAZARD OF ELECTRICAL SHOCK OR BURN IS PRESENT.

1. The entire switchboard should be opened and all components vacuumed thoroughly. Do not use compressed air, since it may blow dust and carbon deposits into the components.
2. Wipe all bus bars, insulators, cables, etc., with a clean, dry, lint-free cloth. All current-carrying parts should also be wiped clean. Although cleaning solvents are available, we do not recommend their use because some types of solvents tend to dissolve or break down certain materials' insulating properties. If grease is removed from BOLT-LOC® or QMB switch blades, it should be replaced with a light coating of Shell Alvania #2 grease.
3. Ground fault relays, shunt trips, solenoids or other electrical control devices should be cleaned with freon or an approved trichloroetyhlene solution. Follow instructions on spray can label. Meters may also be sprayed with this cleaner (this should be confirmed by the meter manufacturer).
4. I-LINE® circuit breakers should be removed, vacuumed and wiped clean. All connectors and bussing should be cleaned as described in STEP 2. One of the circuit breakers should be returned to Square D for recommendations as to its internal condition. It is very possible that all circuit breakers should be replaced due to internal contamination. However, the circuit breakers may be used temporarily after being electrically checked by a megger to be sure the internal contamination has not caused a phase breakdown. A one (1) megohm reading is considered an acceptable minimum for circuit breakers.

WARNING: CLOSE OFF ALL OPENINGS WHERE CIRCUIT BREAKERS HAVE BEEN REMOVED.

5. After all the cleaning is complete and circuit breakers remounted, all switches and circuit breakers should be placed in the "OFF" position, load side cables disconnected from all branch devices and incoming service disconnected from the main device. The switchboard should then be meggered on each side of the main to check for any remaining contaminants or unseen cracks in any insulators. One (1) megohm is an acceptable minimum reading for the switchboard. If less, the switchboard should not be re-energized and your Square D field office should be contacted.
6. With the megger connected on the load side of the main device, close each switch or circuit breaker one at a time and take a megger reading. If it drops considerably lower than one (1) megohm, do not re-energize the switchboard. If the switchboard contains mostly QMB switches and is located in an area of relatively

high humidity, the minimum megger reading can drop to as low as 0.5 megohm. If lower or in doubt, consult your Square D field office.

B. A WATER SOAKED SWITCHBOARD:

Before applying any method, moisture should be wiped off all bus bars, insulators and insulating material with a clean cloth. Initial resistance measurements should be taken. If these readings fall below 0.2 megohms with all branch devices in the "ON" position, the equipment SHOULD NOT BE ENERGIZED.

WARNING: DO NOT WORK INSIDE SWITCHBOARD WHILE IT IS ENERGIZED. POWER MUST BE OFF WHEN TAKING MEGGER READINGS.

1. If the resistance measurements are below 0.2 megohm, dry switchboard by directing heated air into the enclosure through a cover plate, top plate or access opening. The temperature within the enclosure should be increased to 90°C, but not to exceed 110°C. Take megger readings every two (2) hours during drying. Maintain direct heating until resistance levels off and remains relatively constant for 3 to 4 hours.
2. When the resistance measurements are above one (1) megohm (0.5 megohm for QMB switchboards) power can be applied to 2 or 3 branch devices with the load connected for about one hour. This will help other components in the switchboard to dry out. Further resistance measurements should be taken. If these are still within the above minimums, power should be applied to each branch device, one at a time, allowing 15 minutes between energizing each device. If the resistance drops below 0.5 megohms, then the external drying method should be used on the device. If after this procedure is used, the resistance is still below 0.5 megohms, then the device should be replaced.
3. If the resistance measurements are initially in the range of 0.2 to 0.5 megohms, incandescent lamps can be placed in each switchboard section for a source of heat. Use the same procedure for drying as outlined above.
4. Wiring Diagrams and Instruction Sheets destroyed by water can be replaced. Using the Factory Order Number as a reference, contact your Square D field office to obtain lost wiring diagrams and instruction sheets.

TABLE I
TORQUE VALUES
BELLEVILLE-TYPE SPRING WASHERS WITH STEEL BOLTS

BOLT		WASHER	TORQUE RANGE
SIZE	SAE GRADE	O.D.	INCH - POUNDS
5/16-18	2	.906	145-160
3/8-16	2	1.00	130-150
3/8-16	2	.870	250-280
1/2-13	2	1.38	525-550
1/2-13	2	1.25	550-620
1/2-13	5	1.25	840
1/2-13	5	2.25	840
1/2-13	5	3.0	840
KEPS NUT ASSEMBLIES			
1/4-20			50-75
5/16-18			80-125
3/8-16			175-225
1/2-13			250-350

TABLE II
SET SCREW LUG TORQUE VALUES
ALUMINUM OR COPPER CABLE
(Do Not Use For Molded Case Circuit Breakers)

AWG Wire Size	Torque Range Inch - Pounds		AWG or MCM	Torque Range Inch - Pounds	
	Screw Driver	Wrench		Screw Driver	Wrench
18	18-20	68-75	1/0	45-50	162-180
16	18-20	68-75	2/0	45-50	162-180
14	18-20	68-75	3/0	—	225-250
12	18-20	68-75	4/0	—	225-250
10	18-20	68-75	—	—	—
8	23-25	68-75	250	—	293-325
6	32-35	99-110	300	—	293-325
4	32-35	99-110	350	—	293-325
3	45-50	135-150	400	—	293-325
2	45-50	135-150	500	—	338-375
1	45-50	135-150	750	—	338-375

TABLE III
QMB FUSIBLE SWITCH CABLE PROVISIONS

Switch Ampere Rating	Quantity and Size of Cable		
	Qty.	Min.	Max.
30	1	#14	#2
60	1	#14	#2
100	1	#14	1/0
200	1	#4	300MCM
400	2	3/0	600MCM
600	2	3/0	600MCM
800	3	3/0	600MCM

TABLE IV
MOLDED CASE CIRCUIT BREAKERS
CABLE PROVISIONS AND TORQUE VALUES

Frame Size	Ampere Rating	Quantity and Cable Size			Torque In. - Lbs.
		Qty.	Min.	Max.	
FY	15-20	1	#14	#8	20
	30-50	1	#12	#4	①
	60-100	1	#6	1/0	①
FA-FH	15-30	1	#14	#4	35
	35-100	1	#10	1/0	50
IF	15-30	1	#14	#4	35
	40-100	1	#8	1/0	50
Q2-Q2-H	100-225	1	#4	300MCM	①
KA-KH	70-225	1	#4	300MCM	250
IK	110-225	1	#4	300MCM	250
Q4	250-400	1	#1	600MCM	300
		or 2	#1	250MCM	300
LA-LH	125-175	1	#1	4/0	200
	200-400	1	3/0	600MCM	300
		or 2	3/0	250MCM	300
MA	125-175	1	#1	4/0	200
MA-MH	450-1000	3	3/0	500MCM	300
NH	600-1200	4	350MCM	750MCM	300

① Refer to Table II.

SWITCHBOARD MEGGERING CHART

CAUTION: DISCONNECT ALL POWER TO SWITCHBOARD BEFORE MEGGERING. USE 500 OR 1000V MEGGER.

ALL DISCONNECTS OPEN

Date											
Phase-to-Phase a - b											
b - c											
c - a											
Phase-to-Ground a - gnd.											
b - gnd											
c - gnd											

ALL DISCONNECTS CLOSED

Phase-to-Phase a - b											
b - c											
a - c											
Phase-to-Ground a - gnd											
b - gnd											
c - gnd											

SERVICE BULLETINS

Service bulletins for various switchboard devices are available through your local Square D Distributor. These include recommended spare parts listings and device replacement procedures. With these bulletins, service and ordering of replacement parts will be quick and convenient. The following is an alphabetical listing of switchboard devices and the available service bulletins. Any device not listed below, such as an I-LINE panel, or maintenance procedure which is not covered in the available bulletins is not customer serviceable and should be referred to the nearest local Square D field office.

DEVICE	SERVICE BULLETIN NUMBER
AC Magnetic Starters:	SM-419R
SSO Switches	9820-1
BOLT-LOC® Switches:	
Motor Operated	9810-2
Manually Operated	9810-6
Electric Tripped	9810-7
Cable Brace Installation Instructions:	30325-328-01
Ground Fault Protection System:	
Type GA Instructions	63020-007-01
Type GC Instructions	40268-292-01
Type GP Instructions	40266-897-01
Ground Fault Field Test Procedure:	
Type GC and GP Systems	80043-054-01
Solid State Circuit Breakers	48040-441-02
Low Voltage Power Circuit Breakers:	SU-6130-2

DEVICE	SERVICE BULLETIN NUMBER
Molded Case Circuit Breakers:	Section 600
PE Solid State Circuit Breakers:	48040-408-02
ME Solid State Circuit Breakers:	48040-434-02
Motor Operators for Circuit Breakers:	
FA and KA	48040-033-05
LA and MA	48040-033-04
PA	48040-189-50
Motor Starters:	
QMBS	Size 0 277AS
	Size 1 278AS
	Size 2 279AS
	Size 3 305AS
QMB Circuit Breaker Adapter Units:	Section 7120
QMB Fusible Switches:	Section 4620
QMB Circuit Breaker Enclosures:	Section 2320

NOTE: Other useful literature includes NEMA Publication PB1.1-1979 (Part #80030-488-01) and NFPA70B-1983, Recommended Practice for Electrical Equipment Maintenance.

SQUARE D COMPANY
252 N. Tippecanoe, Peru, IN 46970

PRINTED IN U.S.A.

SQUARE D COMPANY
POWER EQUIPMENT DIVISION
ATLANTA ASSEMBLY PLANT
ATLANTA, GEORGIA

NAME OF JOB:
APPLIED INSTRUCTION

LOCATION:
CAMP LEJUNE, N.C.

ARCHITECT:

ENGINEER:

ELECTRICAL CONTRACTOR:
BRYANT DURHAM

DISTRIBUTOR/LOCATION
CONSOLIDATED ELECTRICAL DISTRIBUTOR
RALEIGH, N.C.

ORDER NO.
6055 JB 161662 D

TYPE OF EQUIPMENT:
SWITCHBOARD
MDP

FACTORY ORDER NO:
42-04689-01

FIELD ENGR.:W.J. HUGHES-RALEIGH-227
HDQR. ENGR.:D. MOORE/GW
NO. OF COPIES:13(12-227, 1-222)
APPROVAL [X] 12/23/86
RECORD [X] 09/29/87
DATE MAILED: 9/30/87

POWER STYLE TOTALLY ENCLOSED DEAD FRONT SWITCHBOARD NOTES (SWBD5@01)

ENGINEER: CBT DATE: 9/30/87 PAGE 1 OF 2
SWITCHBOARD MARKING: MDP DWG. A42-04689-12

1. SERVICE: 3 PHASE, 4 WIRE, 277/480 VOLTS AC, 1200 AMPERES

2. THE SHORT CIRCUIT CURRENT RATING OF THIS SWITCHBOARD LINEUP IS NOT MORE THAN 100,000 RMS SYMMETRICAL AMPERES,480 VOLTS MAXIMUM. (REFER TO THE INDIVIDUAL DEVICE RATING TO DETERMINE COMPONENT SHORT CIRCUIT RATING.)

3. BUSSING WITH PLATED JOINTS AND COPPER BUS BARS WITH CURRENT DENSITY PER CROSS-SECTIONAL AREA IN ACCORDANCE WITH UNDERWRITERS LABORATORIES STANDARD UL-891.

4. LUG SIZES SHOWN ON THIS DRAWING ARE FOR COPPER OR ALUMINUM CABLES UNLESS OTHERWISE SPECIFIED.

5. SWITCHBOARD IS FRONT ACCESSIBLE.

6. SWITCHBOARD IS CONSTRUCTED FOR MOVING ON ROLLERS OR WITH LIFTING ANGLES.

7. SWITCHBOARD FRAME CONSTRUCTED OF FORMED ANGLES AND CHANNELS, ARC WELDED AND BOLTED TOGETHER. FRAME IS MOUNTED ON 1.5"X3" STEEL FLOOR CHANNELS. SWITCHBOARD ENCLOSURE CONSISTS OF FORMED, SCREW REMOVABLE FRONT, REAR AND SIDE PLATE; FLAT SCREW REMOVABLE TOP PLATE.

8. SWITCHBOARD PAINT FINISH: PHOSPHATE WASH AND FINISH COAT OF SQUARE D CO. STANDARD GRAY BAKED ENAMEL, ANSI 49.

9. APPROXIMATE SHIPPING WEIGHT:2460 LBS.

10. SWITCHBOARD SECTION 3 TO HAVE UNDERWRITERS LABORATORIES DEAD FRONT LABEL.

11. SWITCHBOARD SECTION 1 & 2 TO BE SUITABLE FOR USE AS UNDERWRITERS LABORATORIES SERVICE ENTRANCE EQUIPMENT.

12. SOLID NEUTRAL TO BE ISOLATED FROM SWITCHBOARD FRAME WITH GROUNDING PROVISIONS.

13. SERVICE ENTRANCE BARRIER REQUIRED PER N.E.C. PARAGRAPH 384.3A.

14. MAIN CABLES TO ENTER BOTTOM OF SECTION 2.

POWER STYLE TOTALLY ENCLOSED DEAD FRONT SWITCHBOARD NOTES

ENGR: CBT DATE: 9/30/87
SWITCHBOARD MARKING: MDP DWG. A42-04689-12

15 CUSTOMER METERING PER 80241-000-04 PAGE 11 WITH:
(1) AMMETER 0-1200 AMP SCALE, 2% ACCURACY CLASS WITH PEAK DEMAND POINTER.
(1) VOLTMETER 0-600 VOLT SCALE, 2% ACCURACY CLASS
(2) INSTRUMENT SELECTOR SWITCHES
(3) CURRENT TRANSFORMERS, 1200 TO 5 AMP RATIO
(3) POTENTIAL TRANSFORMERS,2.4 TO 1 RATIO

16. (2) SPACE HEATERS WITH INDIVIDUAL THERMOSTATIC CONTROL(TYPE PHT-500A).
(1) TYPE H 600A 1014 HUMIDISTATS WILL ENERGIZE HEATERS DURING PERIODS OF HIGH HUMIDITY. WIRED PER A42-04689-14.

17. CIRCUIT M3 TO HAVE:BLOWN MAIN FUSE DETECTOR WIRED PER A11-2012-215.

18.

FUSIBLE SWITCHES
FUSES NOT INSTALLED BY SQUARE D CO.
MECHANICAL LUGS

AMPERE RATING	NO. OF LUGS PER PHASE	PHASE LOAD SIDE LUGS WIRE RANGE	
		MIN.	MAX.
200	1	#4	300 MCM
400	2	3/0	600 MCM
600	2	3/0	600 MCM

19. QMB SWITCHES THRU 600 AMPERES FURNISHED WITH CLASS J FUSE CLIPS.
800 AMPERE QMB SWITCHES FURNISHED WITH CLASS L FUSE PROVISIONS.

20. JOB NAMEPLATE PER ENCLOSED PORTION OF COVERSHEET.

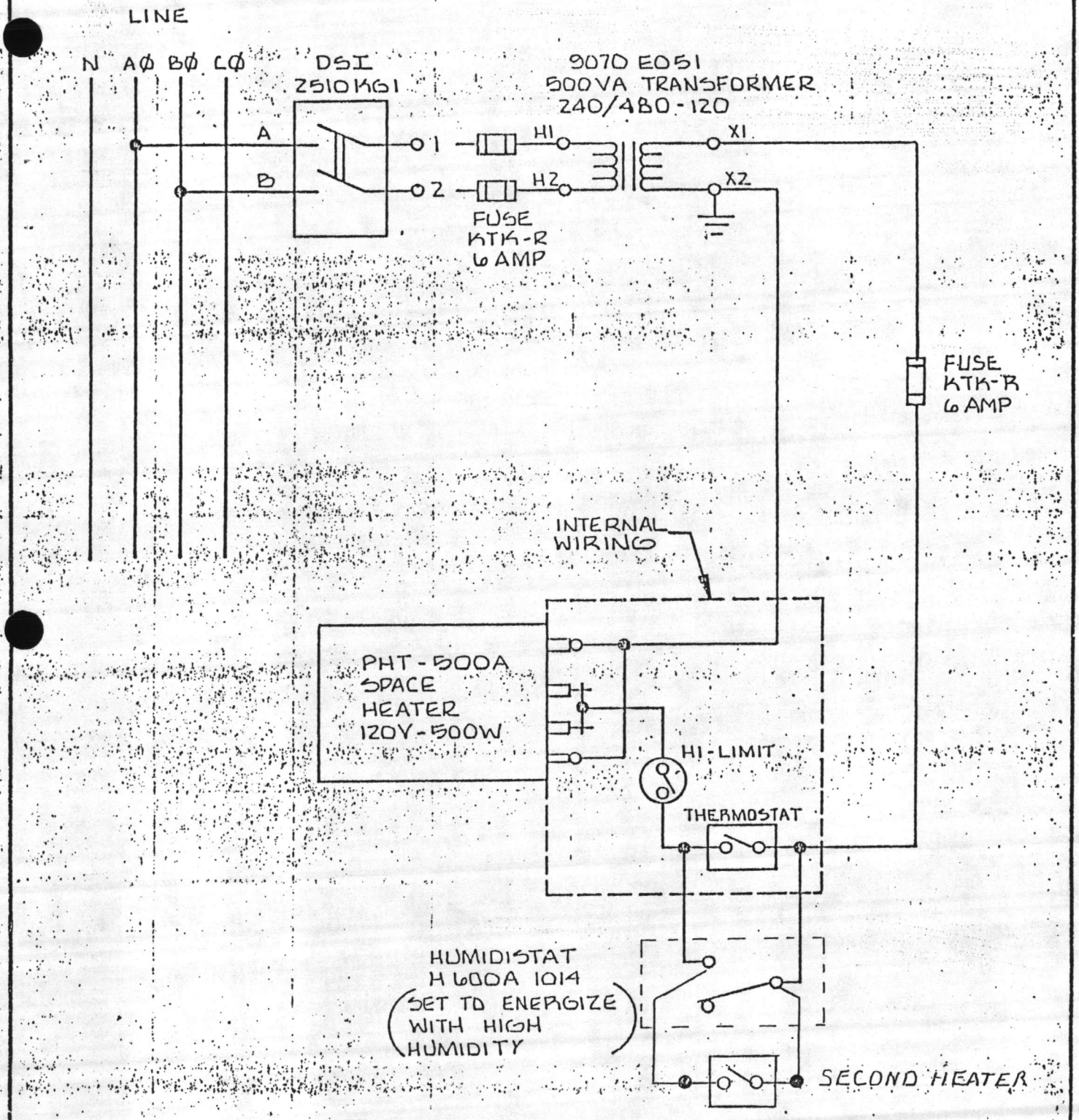

CUSTOMER IDENTIFICATION NO.:					
JOB TITLE:					
LOCATION:	1		CUST. CHANGE ADD FUSE	WDT	9-28-84
ARCHITECT:	NO.	KEY	REVISIONS	BY	DATE
ENGINEER:					
ELEC. CONTRACTOR: DRAWN: T.N.					
CUSTOMER: CHECKED:					
CUST. ORDER NO.: SCALE: N.T.S.					
FACTORY ORDER NO.: 42-82817-2 DATE: 6-11-84					

SQUARE D COMPANY
ASSEMBLY PRODUCTS

DWG. NO. A42-04639-14

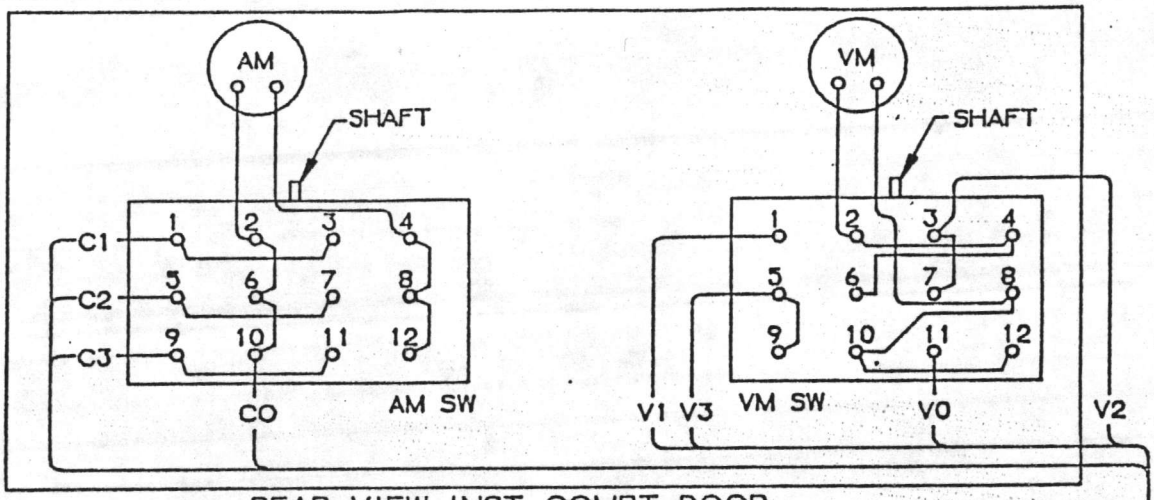

REAR VIEW-INST COMPT DOOR

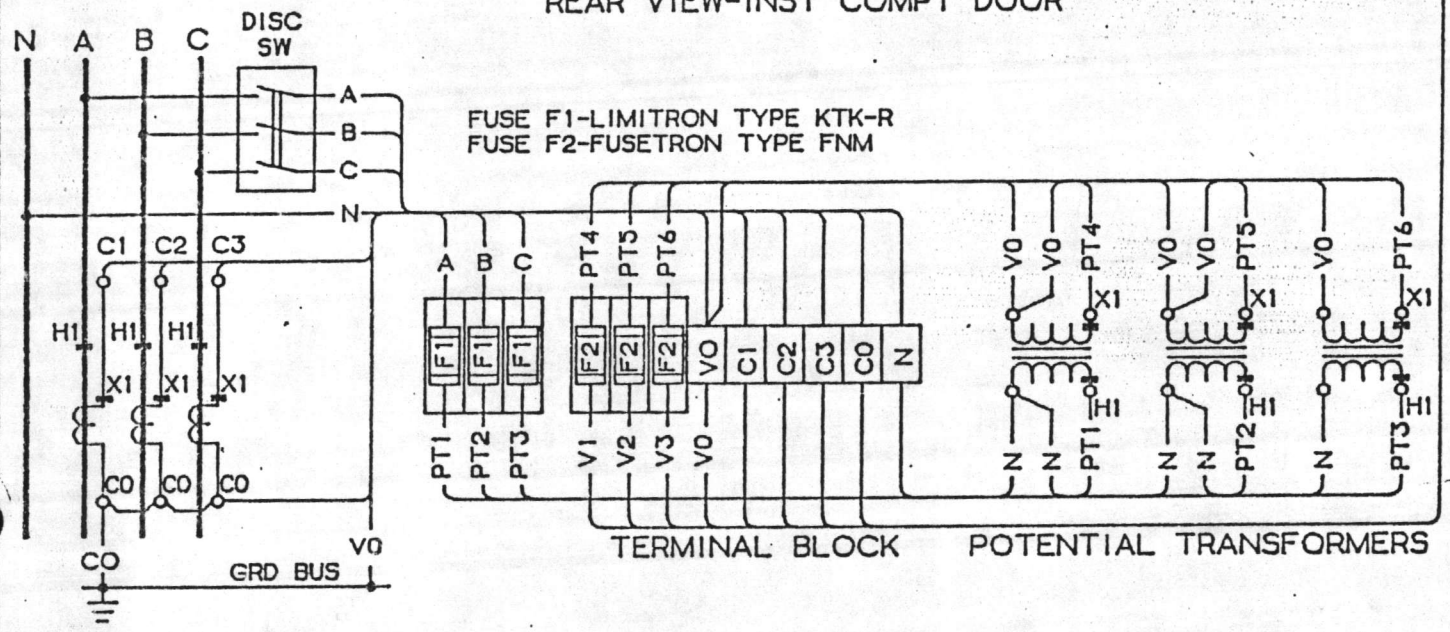

AMMETER SWITCH
CONTACT SEQUENCE

OFF
1 2 3

POSITION	READ AMPS	1	2	3	4	5	6	7	8	9	10	11	12
OFF	-	X				X				X			
•		X		X		X				X			
1	A			X		X				X			
•		X		X		X		X		X			
2	B	X						X		X			
•		X				X		X		X		X	
3	C	X				X							X

X DENOTES CONTACT CLOSED
• INDICATES MAKE BEFORE BREAK

VOLTMETER SWITCH
CONTACT SEQUENCE

OFF
1-2 1
2-3 2
3-1 3

POSITION	READ VOLTS	1	2	3	4	5	6	7	8	9	10	11	12
3-1	C-A	X								X			
2-3	B-C			X						X			
1-2	A-B	X						X					
OFF	-												
1	A-N	X											X
2	B-N			X									X
3	C-N					X							X

3 PHASE-4 WIRE VOLTMETER-AMMETER
WIRING DIAGRAM-3 C.T.-3 P.T.

ORIGINAL

REV.	D/N	DATE	CK'D
A	1130-36	3-26-85	SRM

SQUARE D COMPANY

CUSTOMER METERING FOR SERIES 3 SWITCHBOARD FRAMES, WIRING DIAGRAMS.

DRAWN- JLC/C
D/N- 1170-01
DATE- 8-26-83
CHECKED- KNOHL
PAGE- 11 OF 19

80241-000-04

9070-E071

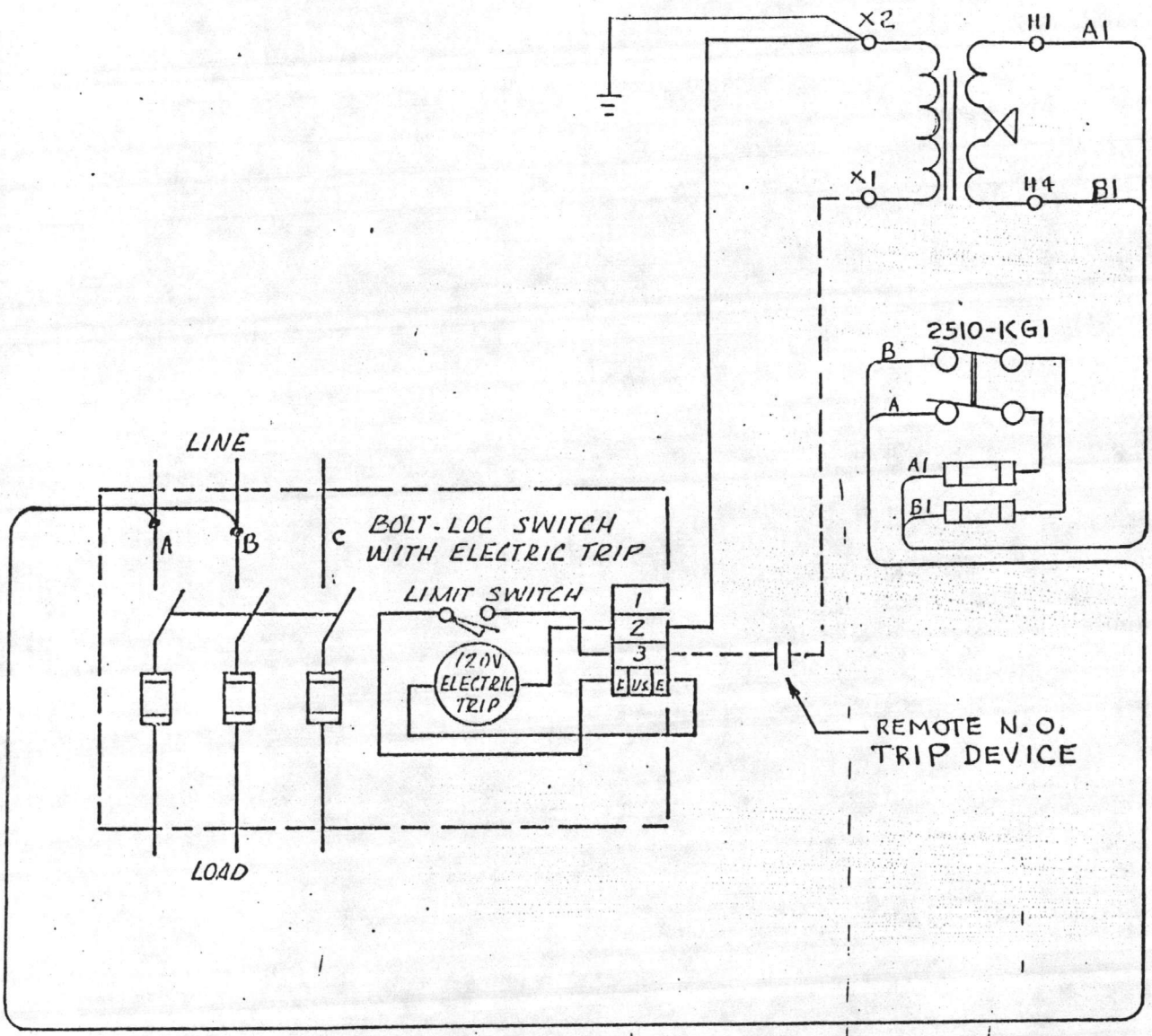

WIRING DIAGRAM FOR ELECTRIC TRIP
BOLT-LOC

NO.	KEY	REVISIONS	BY	DATE

ELEC. CONTRACTOR:	DRAWN: RHR
CUSTOMER:	CHECKED:
CUST. ORDER NO.	SCALE: NTS
FACTORY ORDER NO.	DATE: 2-22-79

SQUARE D COMPANY
ASSEMBLY PRODUCTS

DWG. NO. A11-2012-215

SWD-A (8-76)

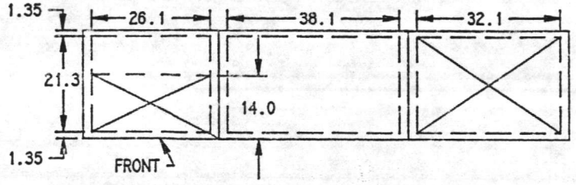

TOP VIEW

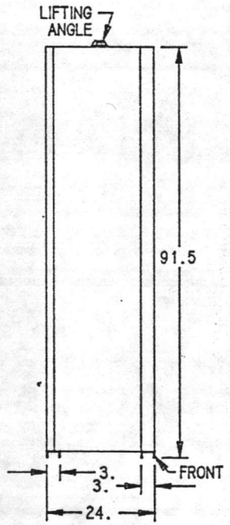

SIDE VIEW

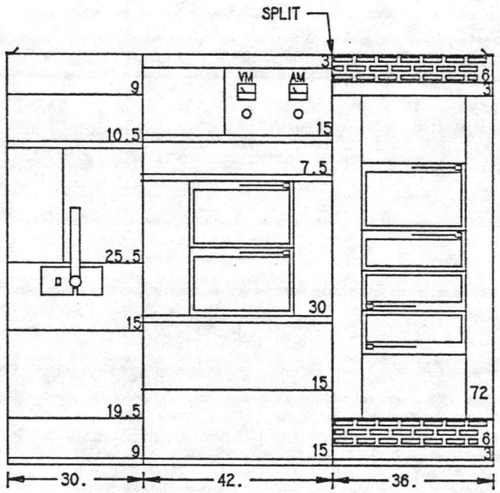

FRONT VIEW

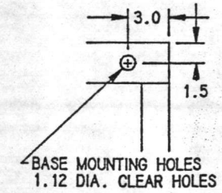

BASE MOUNTING HOLE DETAIL

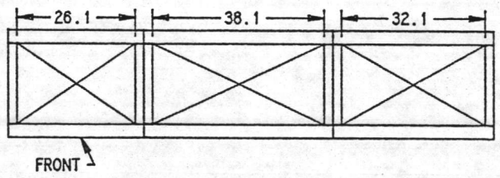

FLOOR PLAN

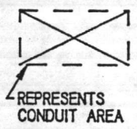

SECTIONS ARE NUMBERED
CONSECUTIVELY LEFT TO RIGHT

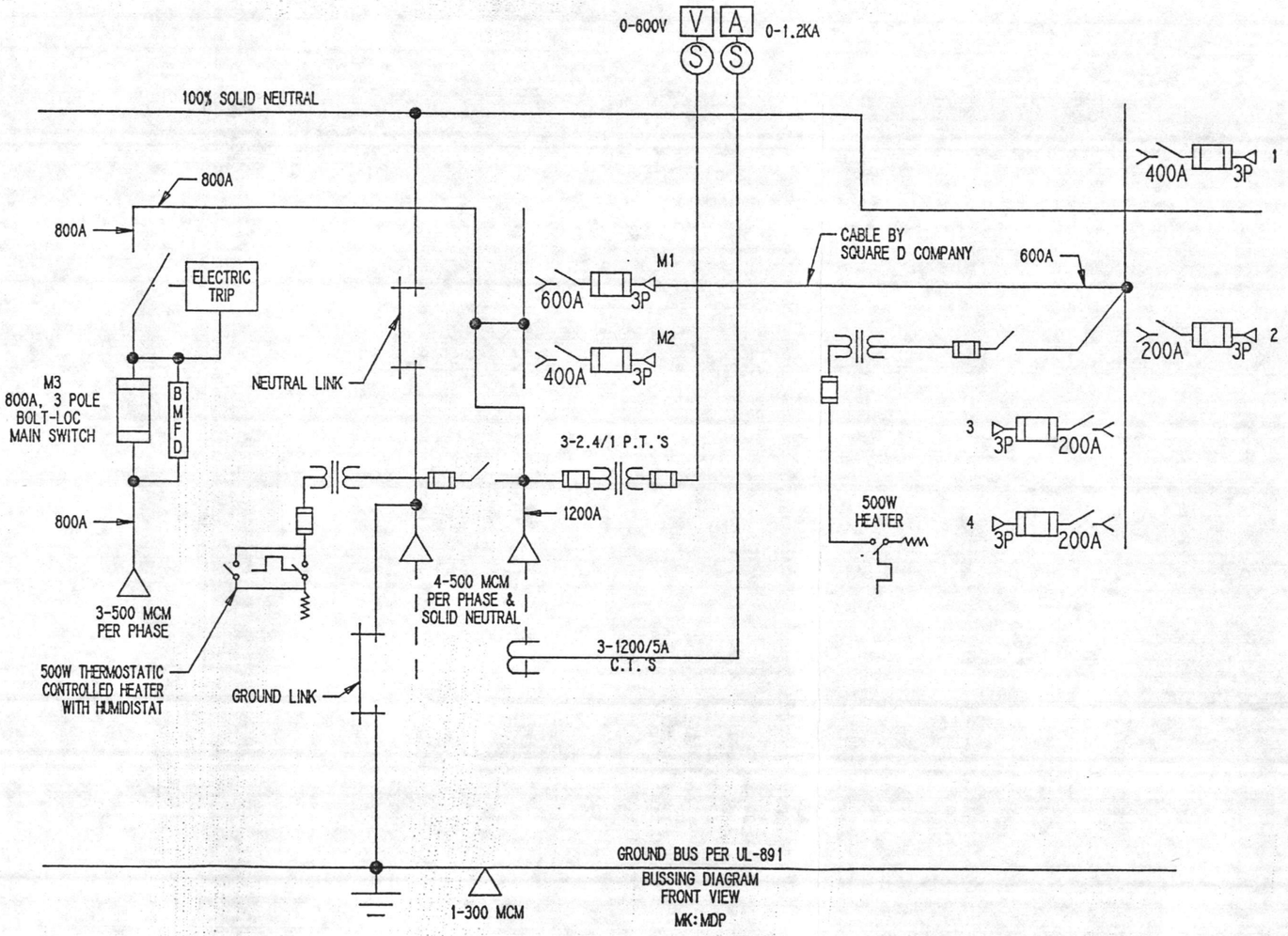

BUSSING DIAGRAM
FRONT VIEW
MK: MDP

DRAWN BY	NO	KEY	REVISIONS	BY	DATE	SQUARE D COMPANY
AO						
CAD NO. 2						DWG. NO. B42-04689-11
CHKD:						

TAB PLACEMENT HERE

DESCRIPTION:

Section III

☒ Tab page did not contain hand written information

☐ Tab page contained hand written information
*Scanned as next image

Confidential Records Management, Inc.
New Bern, NC
1-888-622-4425
9/08

STANDARDS PUBLICATION PB 1.1-1986

GENERAL INSTRUCTIONS FOR PROPER INSTALLATION, OPERATION AND MAINTENANCE OF PANELBOARDS RATED 600 VOLTS OR LESS

RETAIN FOR USE OF QUALIFIED MAINTENANCE PERSONNEL

SQUARE D COMPANY

NATIONAL ELECTRICAL MANUFACTURERS ASSOCIATION ■ 2101 L STREET N.W., WASHINGTON, D.C. 20037

TABLE OF CONTENTS

Page

FOREWORD i

SCOPE ii

SECTION 1 GENERAL 1

SECTION 2 INSTALLATION OF PANELBOARD CABINETS (BOXES) 1

SECTION 3 INSTALLATION OF CONDUIT AND WIRES 2

SECTION 4 INSTALLATION OF PANELBOARD 6

SECTION 5 STEPS TO BE TAKEN BEFORE ENERGIZING 7

SECTION 6 INSTALLATION OF CABINET FRONT 7

SECTION 7 ENERGIZING EQUIPMENT 8

SECTION 8 CARE AND MAINTENANCE 8

SECTION 9 PERMISSIBLE LOADING OF PANELBOARDS 10

©1986 by National Electrical Manufacturers Association

GENERAL INSTRUCTIONS FOR THE PROPER INSTALLATION, OPERATION, AND MAINTENANCE OF PANELBOARDS RATED 600 VOLTS OR LESS

(Approved as Authorized Engineering Information 5-19-1986)

FOREWORD

This publication is a guide of practical information containing instructions for the proper installation, operation, and maintenance of panelboards rated 600 volts or less. These recommendations of the Panelboard and Distribution Board Section of the National Electrical Manufacturers Association will be found useful by architects, electrical engineers, electrical contractors, electricians, maintenance engineers and others.

It is recommended that work described in this set of instructions be performed only by qualified personnel familiar with the construction and operation of panelboards and that such work be performed only after reading this complete set of instructions.

Further, if the maintenance personnel have specific questions not covered by these instructions, they are urged to contact the manufacturer of the panelboard directly.

These instructions will be reviewed periodically by the Section for the purpose of updating them to reflect advancing technology. Please address any comments or questions you may have on the text to:

Manager, Engineering Department
National Electrical Manufacturers Association
2101 L Street, N.W.
Washington, D.C. 20037

Publication No. PB 1.1-1986 revises and supersedes PB 1.1-1979

SCOPE

This Standards Publication covers single panelboards, or groups of panel units suitable for assembly in the form of single panelboards, including buses, and with or without switches and/or automatic overload protective devices (fuses or circuit breakers). These units are used in the distribution of electricity for light, heat and power at:

600 volts and less
1600-ampere mains and less
1200-ampere branch circuits and less

Specifically excluded are live-front panelboards, panelboards employing cast enclosures for special service conditions, and panelboards designed primarily for residential and light commercial service equipment.

Section 1

GENERAL

The successful operation of panelboards is dependent upon proper installation, operation, and maintenance. Neglecting fundamental installation and maintenance requirements may lead to personal injury as well as damage to electrical equipment or other property.

QUALIFIED PERSONNEL

Therefore, installation, operation and maintenance of panelboards should be conducted only by qualified personnel.

For purposes of these guidelines, a qualified person is one who is familiar with the installation, construction, and operation of the equipment and the hazards involved. In addition, the person is:

a. Trained and authorized to test, energize, clear, ground, tag, and lockout circuits and equipment in accordance with established safety practices.

b. Trained in the proper care and use of protective equipment such as rubber gloves, hard hat, safety glasses or face shields, and flash resistant clothing in accordance with established safety practices.

c. Trained in rendering first aid.

WARNING—THERE IS A HAZARD OF ELECTRIC SHOCK OR BURN WHENEVER WORKING IN OR AROUND ELECTRICAL EQUIPMENT. TURN OFF POWER SUPPLYING THE EQUIPMENT BEFORE WORKING INSIDE.

Section 2

INSTALLATION OF PANELBOARD CABINETS (BOXES)

Install the cabinet in a neat and workmanlike manner. Follow the manufacturer's installation instructions.

1. *Location in Building.* Locate the cabinet so that it is readily accessible and not exposed to physical damage.

2. *Flammable Material.* Locate the cabinet well away from flammable material.

3. *Unusual Service Conditions.* Do not locate the cabinet where it will be exposed to ambient temperatures above 40ºC (104ºF), corrosive or explosive fumes, dust, vapors, dripping or standing water, abnormal vibration, mechanical shock, high humidity, tilting, or unusual operating conditions, unless the cabinet/panelboard combination has been designed for these conditions.

4. *Indoor Damp Locations.* Locate or shield the cabinet so as to prevent moisture and water from entering and accumulating therein. Mount the cabinet so that there is at least 1/4 inch of air space between the cabinet and the wall or other supporting surface.

5. *Wet Locations.* Cabinets should be specifically approved for wet locations. Mount the cabinet so that there is at least 1/4 inch of air space between the cabinet and the wall or other supporting surface.

6. *Clearance from Ceiling.* Do not locate the cabinet against a non-fireproof ceiling; allow a space of 3 feet between the ceiling and cabinet unless an adequate fireproof shield is provided.

7. *Space Around the Cabinet.* When selecting a location, provide sufficient access and working space around the cabinet (See NEC Section 110-16*). The width of the working space in front of the panelboard should be at least 30 inches and this space should not be used as storage. The working space should have adequate lighting and a minimum head room of 6-1/4 feet.

8. *Mounting of Cabinet.* The cabinet should be reliably secured to the mounting surface. Do not depend on wooden plugs driven into holes in masonry, concrete, plaster or similar materials. (See Section 110-13 of the National Electrical Code.)

9. *Flush Mounting in Wall.* In walls of concrete, tile, or other noncombustible material, install the cabinet so that its front edge will not set back more than 1/4 inch from the finished surface. In walls of wood or other combustible material, cabinets should be flush with or project beyond the finished surface. (See Section 373-3 of the National Electrical Code.)

10. *Unused Openings in Cabinet.* Effectively close unused openings in the cabinet to provide protection which is substantially equivalent to that afforded by the wall of the cabinet.

11. *Grounding of Panelboard Cabinets.* Ground the cabinet or box as specified in Article 250 of the National Electrical Code. When the cabinet or box contains service equipment, it will be necessary to bond the box to the grounded (neutral) supply conductor.

Section 3

INSTALLATION OF CONDUIT AND WIRES

1. Conduits should be installed so as to prevent moisture or water from entering and accumulating within the enclosure. Provision should be made to protect conductors from abrasion in accordance with Article 373 of the National Electrical Code.

2. Knockouts should be removed as follows:

IMPORTANT: Remove knockouts, ONE AT A TIME, alternating INWARD and OUTWARD.

FIRST: Remove center knockout INWARD.

a. Place screwdriver blade against point farthest from tie and strike INWARD (Figure 3-1). Bend back and forth to break tie.

NEXT: Remove rings ONE AT A TIME without straining remaining rings.

b. Pry first ring OUTWARD with screwdriver midway between ties, using pliers flat against box under screwdriver (Figure 3-2). Bend ring sections OUTWARD with pliers, then back and forth to break ties (Figure 3-3).

c. Remove second ring INWARD by striking screwdriver (with blade against point midway between ties) then breaking ring sections inward and back and forth to break ties.

3. Be sure that the lugs are suitable and approved for use with the cable being connected to the panelboard. See Item 7 of Section 4 for making proper connections. Before pulling any cables into the box, make sure that the temperature rating of the wire complies with the job specifications and the panelboard interior marking, if available.

*NFPA Pub. No. 70-1984, available from the National Fire Protection Association, Batterymarch Park, Quincy, Massachusetts 02269.

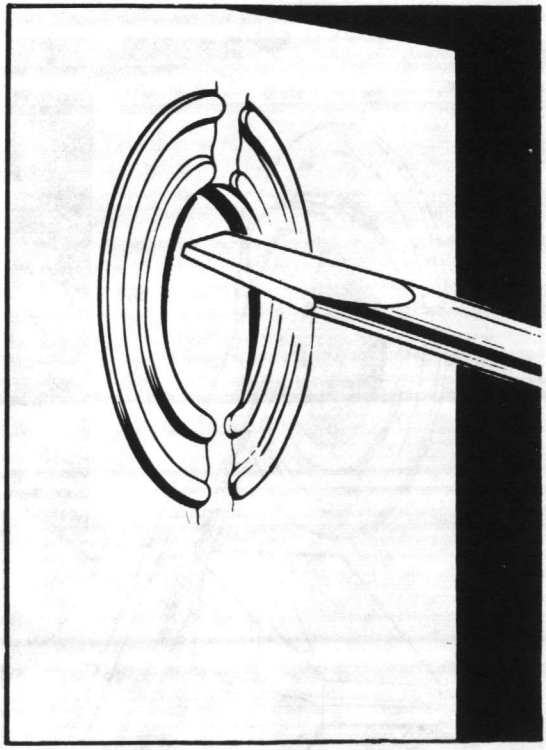

Figure 3-1
Knockout Removal - Step 1

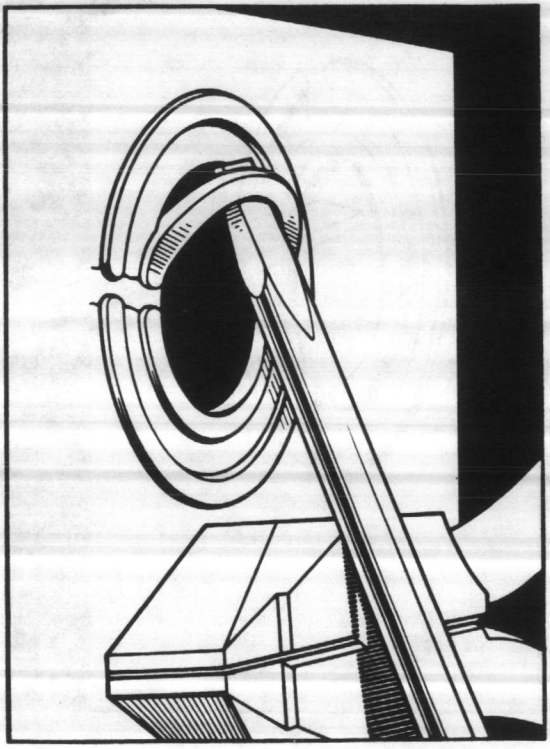

Figure 3-2
Knockout Removal - Step 2

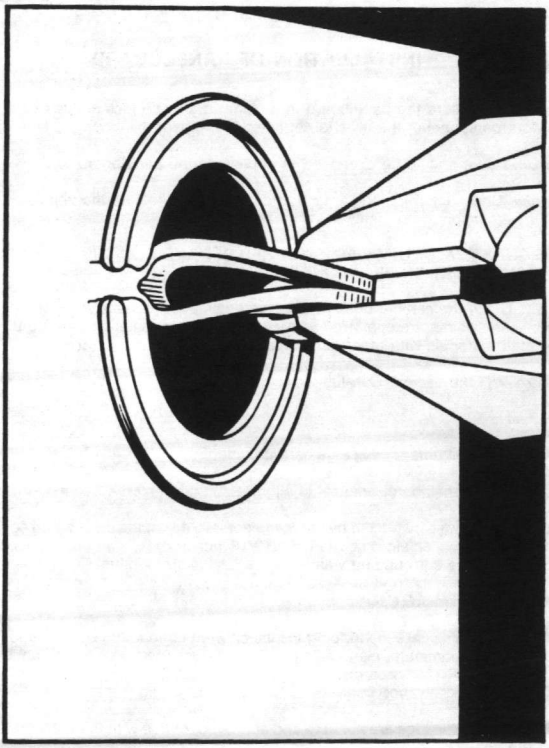

Figure 3-3
Knockout Removal - Step 3

4. Keep conductor lengths to a minimum within the wiring gutter. Excessive cable lengths will result in additional heating and may result in overheating. However, cables should be long enough to reach the terminal location in a manner that avoids strain on the connecting lug.

5. Exercise care to maintain the largest practical bending radius of conductors; otherwise the insulation may be damaged or terminal connections may become loosened.

Section 4

INSTALLATION OF PANELBOARD

1. *Proper Storage.* Store the panelboard in a clean, dry place located so that mechanical damage from work personnel in the area is not likely to happen.

2. *Unpacking.* Care should be exercised in unpacking the panelboard to prevent damage.

3. *Inspection.* Check for shipping damage and check to make sure that the panelboard is the correct one for installation in the cabinet.

WARNING—BE SURE THAT ALL POWER IS TURNED OFF AND REMAINS OFF DURING THE FOLLOWING INSTALLATION PROCEDURES.

4. *Cleaning.* Clean the cabinet of all foreign materials prior to installation of the panelboard. If parts at connection points are spattered with cement, plaster, paint or other foreign material, remove the foreign materials with great care to avoid damaging plated surfaces.

5. *Manufacturer's Instructions.* Carefully follow the manufacturer's instructions and labels.

6. *Installation*

   a. Adjust the alignment devices where provided.

   b. Install the panelboard, finalize its alignment, and tighten it securely in the cabinet.

   c. Unless otherwise instructed by the manufacturer, adjust the panelboard so that the return flange of the deadfront shield is no more than 3/16 inch from (1) the front of the box for surface mounting or (2) the surrounding wall surfaces for flush mounting.

7. *Connect Line and Branch Conductors*

   a. *Conductors.* Use care in stripping insulation from conductors so as not to nick or ring the conductor. For aluminum, clean all oxide from the stripped portion and apply a joint compound.

   b. Distribute and arrange conductors neatly in the wiring gutters. (See Section 3.)

   c. Be sure that the lugs are suitable and approved for use with the cable before being connected to the panelboard.

   d. Tighten all lugs. Use the manufacturer's torque values, if furnished.(See Section 5, Item 1.)

8. *Ground Panelboard.* (See Section 384-27 of the National Electrical Code.)

   a. *Cabinet.* Ground the panelboard cabinet in accordance with Item 11 of Section 2.

b. *Equipment Grounding Conductors.* Prepare equipment grounding conductors in accordance with Item 7.a and connect them to the equipment grounding terminal bar. Check to be sure that the terminal bar is securely bonded to the cabinet or panelboard frame and that it is not connected to the neutral bar except at service equipment as permitted in Section 250-52 of the National Electrical Code.

9. When installing circuit breakers or fuses, ensure that they are of the proper type or class and rating.

10. Clean the cabinet of all debris which has accumulated during the panelboard installation.

11. In order to protect the panelboard before completion of the job, cut and install a piece of cardboard to fit the outline of the box. If the job is complete, perform the steps in Section 5 and then install the cabinet front, per Section 6.

Section 5

STEPS TO BE TAKEN BEFORE ENERGIZING

1. Tighten all accessible electrical connections to the manufacturer's torque specifications. If such information is not provided with the equipment, consult the manufacturer.

2. Make certain that all blocks used for shipment have been removed from all component devices and the panelboard.

3. Manually exercise all switches, circuit breakers, and other operating mechanisms to make certain that they operate freely.

4. To make sure that the system is free from short circuits and grounds, conduct an insulation resistance test phase to ground and phase to phase with the switches or circuit breakers in both the open and closed positions. If the resistance reads less than 1 megohm while testing branch circuit devices in the open position, the system may be unsafe and should be investigated.

5. Check to determine that all grounding connections are properly made. If the panelboard is used as service equipment, make certain that the neutral is properly bonded to the enclosure.

6. Remove all debris, scrap wire, etc., from the panelboard and cabinet before installing the cabinet front. Make certain that all deadfront shields are properly aligned and tightened. Install the cabinet front in accordance with Section 6.

Section 6

INSTALLATION OF CABINET FRONT

The cabinet front or trim package is designed to prevent damage to the front during shipment and handling.

1. *Unpacking.* Care should be used when unpacking and handling the cabinet front.

2. *Touch-up.* A suitable paint or other corrosion-resistant finish should be applied to those places where the finish is damaged.

3. *Front Alignment.* The cabinet front may be provided with an adjusting means to align it squarely with the building even though the box may be slightly out of plumb with the building.

Section 7

ENERGIZING EQUIPMENT

1. Energizing a panelboard for the first time after initial installation or maintenance is potentially dangerous. Therefore, qualified electrical personnel should be present when the equipment is energized for the first time. If short circuits caused by damage or poor installation practices have not been detected in the procedures specified in Sections 1-6, serious damage can occur when the power is turned on.

2. There should be no load on the panelboard when it is energized. Turn off all of the downstream loads, including those such as other panelboards and devices which are remote from the panelboard.

3. The equipment should be energized in sequence by starting at the source end of the system and working towards the load end. In other words, energize the main devices, then the feeder devices, and then the branch-circuit devices. Turn the devices on with a firm positive motion. Protective devices which are not quick-acting should not be "teased" into the closed position.

4. After all main, feeder, and branch circuit devices have been closed, loads such as lighting circuits, contactors, heaters, and motors may be turned on.

Section 8

CARE AND MAINTENANCE

A care and maintenance program for panelboards should be conducted on a regularly scheduled basis in accordance with the following:

1. A panelboard which has been carrying its regular load for at least 3 hours just prior to inspection should be field tested by feeling the deadfront surfaces of circuit breakers, switches, interior trims, doors, and enclosure sides with the palm of the hand. If the temperature of these surfaces does not permit you to maintain contact for at least 3 seconds, this may be an indication of trouble and investigation is necessary.

WARNING—BEFORE PERFORMING ANY OF THE FOLLOWING OPERATIONS, TURN OFF ALL POWER SUPPLYING THE PANELBOARD. CHECK THE VOLTAGE OF ALL INCOMING LINE TERMINALS TO POSITIVELY ASCERTAIN THAT THE EQUIPMENT IS TOTALLY DEENERGIZED.

2. Inspect the panelboard once each year or after any severe short circuit.

   a. Look for any moisture or signs of previous wetness or dripping inside the panelboard. Condensation in conduits or dripping from outside sources is one known cause of malfunction.

      (1) Seal off any conduits which have dripped condensate, and provide a means for further condensate to drain away from the panelboard.

      (2) Seal off any cracks or openings which have allowed moisture to enter the enclosure. Eliminate the source of any dripping on the enclosure and any other source of moisture.

      (3) Replace or thoroughly dry and clean any insulating material which is damp or wet, or shows an accumulation of deposited material from previous wettings.

   b. If there is an accumulation of dust and dirt, clean out the panelboard by using a brush, vacuum cleaner, or clean lint-free rags. Avoid blowing dust into circuit breakers or other components. Do not use a blower or compressed air.

c. Carefully inspect all visible electrical joints and terminals.

(1) Tighten bolts and nuts at bus joints if there is any sign of overheating or looseness. (See Section 5, Item 1.) If joints appear to be badly discolored, corroded, or pitted, the parts should be disassembled and replaced or cleaned.

CAUTION: DO NOT REMOVE PLATING ON ALUMINUM PARTS IN JOINTS. REPLACE DAMAGED ALUMINUM PARTS.

(2) Examine all wire or cable connections for evidence of looseness or overheating. Torque if necessary. (See Section 5, Item 1.) If major discoloration or cable damage is apparent, replace the damaged parts and remove the damaged portion of the cable.

(3) Closely examine fuse clips. If there is any sign of overheating or looseness, check the spring pressure, tightness of clamps, etc. Replace the fuse clips if the spring pressure compares unfavorably with that of other identical fuse clips in the panelboard.

(4) Retighten plug fuses.

(5) Look for signs of deterioration in insulating material or melting of sealing compound. Replace such insulating parts, and assemblies where sealing compound has melted.

(6) BE SURE THAT THE CONDITION WHICH CAUSED THE OVERHEATING HAS BEEN CORRECTED.

d. Check the operation of all mechanical components.

(1) Exercise switch operating mechanisms and external operators for circuit breakers to determine that they operate freely to their full on and off positions.

(2) Check the integrity of all electrical and mechanical interlocks and padlocking mechanisms.

(3) Whenever practical, check all devices for missing or broken parts, proper spring tension, free movement, corrosion, dirt, and excessive wear.

(4) Adjust, clean, and lubricate or replace parts as required.

e. After a severe short circuit, examine all devices and bus supports for cracks or breakage. Replace as required.

3. Lubricate the operating parts of switch mechanisms, etc., according to the manufacturer's instructions which are usually printed on diagrams or labels.

a. Use *clean*, nonmetallic, light grease or oil as instructed.

b. Do *not* oil or grease parts of molded case circuit breakers.

c. If no instructions are given on the devices, sliding copper contacts, operating mechanisms, and interlocks may be lubricated with clean, light grease.

d. Wipe off excess lubrication to avoid catching dirt.

4. Operate each switch or circuit breaker several times to ensure that all mechanisms are free and in proper working order. Replace as required.

5. Check circuit breakers and fuses to ensure they have the proper ampere and interrupting ratings. Ensure that noncurrent-limiting devices are never used as replacements for current-limiting devices. Never attempt to defeat rejection mechanisms which are provided to prevent the installation of the incorrect class of fuse.

6. Check insulation resistance:

   a. If a severe short circuit has occurred.

   b. If it has been necessary to replace parts or clean insulating surfaces.

   c. If the panelboard has been exposed to high humidity, condensation or dripping moisture.

Section 9

PERMISSIBLE LOADING OF PANELBOARDS

The ratio of load current to the ampere rating of the overcurrent protective device determines its operating temperature. In compliance with Section 384-16 of the National Electrical Code, the continuous loads of panelboard circuits should be not more than 80 percent of the rating of the overcurrent protective device, unless the marking of the device indicates that it is suitable for continuous duty at 100 percent of its rating.

NEMA STANDARDIZATION

The purpose of NEMA Standards, their classification and status are set forth in certain clauses of the NEMA Bylaws, which are quoted below:

Purpose of Standards

National Electrical Manufacturers Association Standards are adopted in the public interest and are designed to eliminate misunderstandings between the manufacturer and the purchaser and to assist the purchaser in selecting and obtaining the proper product for its particular need. Existence of a National Electrical Manufacturers Association Standard does not in any respect preclude any member or nonmember from manufacturing or selling products not conforming to the standard.

(Bylaw—Art. V, Sec. 1)

Definition of a Standard

A standard of the National Electrical Manufacturers Association defines a product, process or procedure with reference to one or more of the following: nomenclature, composition, construction, dimensions, tolerances, safety, operating characteristics, performance, rating, testing, and the service for which they are designed.

(Bylaw—Art. V, Sec. 2, Subsection A)

Dimensions

Where dimensions are given for interchangeability purposes, alternate dimensions satisfying the other provisions of the standards publication may be capable of otherwise equivalent performance.

(NEMA Policy Memorandum 84-2, dated June 7, 1984)

Classes of Standards

National Electrical Manufacturers Association Standards are of two classes:

1. NEMA Standard, which relates to a product commercially standardized and subject to repetitive manufacture, which standard has been approved by at least 90 percent of the members of the Subdivision eligible to vote thereon;
2. Suggested Standard for Future Design, which may not have been regularly applied to a commercial product, but which suggests a sound engineering approach to future development, which standard has been approved by at least two-thirds of the members of the Subdivision eligible to vote thereon.

(Bylaw—Art. V, Sec. 2, Subsection B)

Authorized Engineering Information

Authorized Engineering Information consists of explanatory data and other engineering information of an informative character not falling within the classification of NEMA Standard or Suggested Standard for Future Design.

(Bylaw—Art. V, Sec. 6, 1st Sentence)

Official Standards Proposal

An Official Standards Proposal is an official draft of a proposed standard which is formally recommended to an outside organization(s) for consideration, comment and/or approval.

(Bylaw—Art. V, Sec. 4, Subsection A)

Identification of Status

Standards in NEMA Standards Publications are identified in the foreword or following each standard as "NEMA Standard" or "Suggested Standard for Future Design." These indicate the status of the standard. These words are followed by a date which indicates when the standard was adopted in its present form by the Association.

The material identified as "Authorized Engineering Information" and "Official Standards Proposal" is designated similarly.

PANELBOARD AND DISTRIBUTION BOARD SECTION

OF THE

NATIONAL ELECTRICAL MANUFACTURERS ASSOCIATION

MEMBER COMPANIES

Challenger Electrical Equipment Corp.
Malvern, PA 19355

Crouse-Hinds Distribution Equipment
A Division Cooper Industries
Earlysville, VA 22936

Custom Switchgear and Controls, Inc.
Santa Clara, CA 94051

Eaton Corp. / Cutler Hammer Products
Milwaukee, WI 53216

Erickson Electrical Equipment Co.
Chicago, IL 60630

General Electric Company
Plainville, CT 06062

Anchor Electric, A Unit of General
Signal Corporation
Manchester, NH 03105

Harvey Hubbell, Inc.
Orange, CT 06477

Milbank Manufacturing Co.
Kansas City, MO 64141

Nix and Miller, Inc.
Buford, GA 30518

Penn Panel and Box Company
Collingdale, PA 19023

Power Controls, Inc.
Commerce, CA 90040

The Pringle Electrical Manufacturing Co.
Ft. Washington, PA 19034

Ryco Manufacturing. Co. Inc.
City of Industry, CA 91748

I-T-E Electrical Products
A Division of Siemans-Allis, Inc.
Tucker, GA 30084

Square D Company
Palatine, IL 60067

Superior Switchboard and Devices
Canton, OH 44702

Unicorn Electrical Products
Anaheim, CA 92806

The Wadsworth Electric Mfg. Co., Inc.
Covington, KY 41012

Westinghouse Electric Corp.
Pittsburgh, PA 15222

TAB PLACEMENT HERE

DESCRIPTION:

Section IV

☑ **Tab page did not contain hand written information**

☐ **Tab page contained hand written information**
***Scanned as next image**

Confidential Records Management, Inc.
New Bern, NC
1-888-622-4425
9/08

GROUND FAULT

CIRCUIT INTERRUPTERS, SPECIFICATION & HOSPITAL GRADE

INTERRUPTER/15 & 20™ DUPLEX RECEPTACLES — U.L. LISTED

GFCI RECEPTACLES

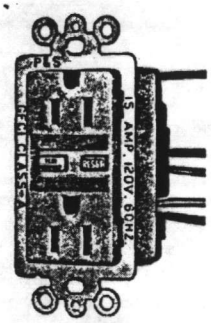

1591-FI

SPECIFICATIONS ALL MODELS

Supply Voltage:	120 (+10, -15) V. AC., 60 Hz.
Configuration Receptacle:	**1591-F** NEMA 5-15R
	2091-F NEMA 5-20R
	2081-FI None
Maximum Circuit Ampacity:	20 Amps.
Trip Threshold:	5±1 mA.
Trip Time:	0.025 sec., nom. per U.L. Standard
Weight:	8 oz.

FEATURES:

- High-impact thermoplastic face.
- Standard and Hospital Grade.
- Feed-thru design will protect all outlets on a circuit, a selected group of outlets, or a single outlet only.

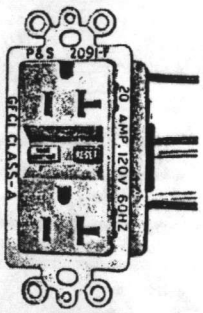

2091-FI

STANDARD GFCI DUPLEX RECEPTACLES

RATING A.	RATING V. AC	DESCRIPTION	CATALOG NUMBERS
15	120	Feed-Thru, Brown*	1591-F
15	120	Feed-Thru, Brown, for No. 4600 Enclosure	1591-F46
15	120	Feed-Thru, Ivory, in 4-color display carton	1591-FID
20	120	Feed-Thru, Brown*	2091-F

* For colors other than Brown, specify brown catalog number with color suffix as follows: Black-**BK**, Ivory-**I**, Red-**RED**, White-**W**.

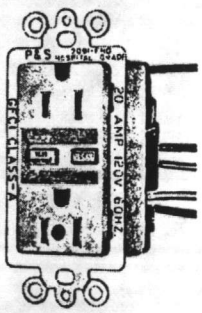

1591-FHGI

HOSPITAL GRADE GFCI DUPLEX RECEPTACLES

15	120	Feed-Thru, Brown*	1591-FHG
20	120	Feed-Thru, Brown*	2091-FHG

* For colors other than Brown, specify brown catalog number with color suffix as follows: Gray-**GRY**, Ivory-**I**, Red-**RED**, White-**W**.

EXTENSION ADAPTERS

When mounting P&S GFCI receptacles in very shallow boxes, these adapters add 3/4" to depth.

COLOR	CAT. NO.	COLOR	CAT. NO.
Brown	1591-A	Ivory	1591-AI
Black	1591-ABK	White	1591-AW

GFCI SWITCH/MOTOR CONTROL

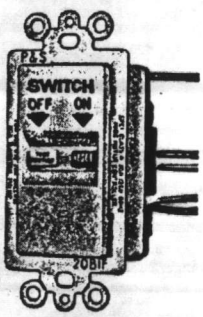

2081-FI

APPLICATION:

For installation within 10 feet of swimming pool to minimize nusiance tripping and provide convenient reset capability. Also for installation in industrial controls equipment as required by Underwriters' Laboratories.

20	120	GFCI, Switch/Motor Control, Ivory	2081-FI

16402 - 1.3.1a

See Technical Section for Dimensions.

16402-2.10.2

STRAIGHT BLADE DEVICES

EXTRA HARD USE SPECIFICATION GRADE

15 & 20A., 125-250V. — UL & CSA LISTED. FED. SPEC. WC-596-F COMPLIANCE

5262 SERIES RECEPTACLES

APPLICATION:

Designed for extra hard use in industrial, institutional and commercial applications where long-term maintenance-free reliability is essential.

2-POLE 3-WIRE

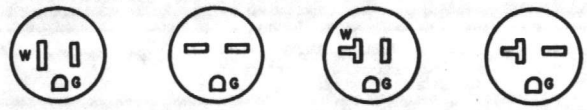

NEMA 5-15R Receptacle | NEMA 6-15R Receptacle | NEMA 5-20R Receptacle | NEMA 6-20R Receptacle

COMPLIANCES: UL, CSA, FSUL, WC-596-F

FEATURES:

- High strength thermoplastic faces.
- Side and back wired to accept #14 to #10 AWG copper or copper-clad conductors. 8 back wire holes.
- .050" plated steel strap locked in and locked on to prevent bending away from body.
- One-piece high performance copper alloy T-slot contacts.
- Automatic grounding to metallic boxes.
- Corrosion-resistant versions available in 15 & 20A., 125V. configurations.
- Isolated Ground versions also available. See Section D for complete listing.

FULS
LISTED-RECEPTACLE
FEDERAL SPEC. WC-596-F

5262-I

DUPLEX RECEPTACLES, SIDE AND BACK WIRED

RATING A.	RATING V.	NEMA CONFIG. NO.	DESCRIPTION	CATALOG NUMBER
15	125	5-15R	*Duplex, Brown	5262
15	125	5-15R	Duplex, Corrosion Resistant, Yellow	CR6200
15	125	5-15R	Duplex, Isolated Ground, Orange	IG6200
15	250	6-15R	*Duplex, Brown	5662
15	250	6-15R	Duplex, Isolated Ground, Orange	IG6600
20	125	5-20R	*Duplex, Brown	5362
20	125	5-20R	Duplex, Corrosion Resistant, Yellow	CR6300
20	125	5-20R	Duplex, Isolated Ground, Orange	IG6300
20	250	6-20R	*Duplex, Brown	5862
20	250	6-20R	Duplex, Isolated Ground, Orange	IG6800

* Available in colors other than Brown. Specify Brown catalog number with color suffix as follows: Black-**BK**, Gray-**GRY**, Ivory-**I**, Red-**RED**, White-**W**.

5361-I

SINGLE RECEPTACLES, SIDE AND BACK WIRED

15	125	5-15R	*Single, Brown	5261
15	125	5-15R	Single, Corrosion Resistant, Yellow	CR6201
15	125	5-15R	Single Isolated Ground, Orange	IG5261
15	250	6-15R	*Single, Brown	5671
15	250	6-15R	Single Isolated Ground	IG5661
20	125	5-20R	*Single, Brown	5361
20	125	5-20R	Single Corrosion Resistant, Yellow	CR6301
20	125	5-20R	Single Isolated Ground, Orange	IG6301
20	250	6-20R	*Single, Brown	5871
20	250	6-20R	Single Isolated Ground, Orange	IG5861

* Available in colors other than Brown. Specify Brown catalog number with color suffix as follows: Black-**BK**, Gray-**GRY**, Ivory-**I**, Red-**RED**, White-**W**.

For complete listing of Isolated Ground devices see Section D.

16402-1.3.1a

See Technical Section for Dimensions.

16402-2.10.3

STRAIGHT BLADE DEVICES

EXTRA HARD USE SPECIFICATION GRADE

15 & 20A., 125 & 250V. — U.L. & CSA LISTED

APPLICATION:

Designed for extra hard use in industrial, institutional and commercial applications where long-term maintenance-free reliability is essential.

2-POLE 3-WIRE

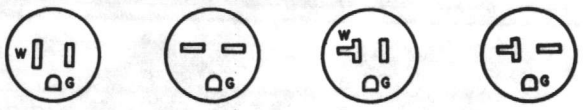

NEMA 5-15R Receptacle | NEMA 6-15R Receptacle | NEMA 5-20R Receptacle | NEMA 6-20R Receptacle

FEATURES:

- Two-piece cord grip exceeds U.L. cord pull test requirements.
- Plugs and connectors are high-visibility yellow, with gray available in 15 and and 20A. configurations.
- Molded of high strength thermoplastic.
- Angle plugs and flanged devices are gray.
- Dead-front design.
- Cord diameter .230" - .655".

COMPLIANCES: U.L and CSA Listed.

PLUGS, INLETS & OUTLETS, CONNECTORS

PLUG | ANGLE PLUG | FLANGED INLET | FLANGED OUTLET | CONNECTOR

RATING AMPS. VOLTS	PLUG CONFIGURATION & NEMA NUMBER	CATALOG NUMBERS				
2-POLE 3-WIRE GROUNDING						
15A. 125V.	L5-15P	5266-SS CR5266-SS 5266-SSGRY	5266-SS-AN	5278-SS	5279-SS	5269-SS CR5269-SS 5269-SSGRY
15A. 250V.	L6-15P	5666-SS 5666-SSGRY	5666-SS-AN	5678-SS	5679-SS	5669-SS 5669-SSGRY
20A. 125V.	L5-20P	5366-SS CR5366-SS 5366-SSGRY	5366-SS-AN	5378-SS	5379-SS	5369-SS CR5369-SS 5369-SSGRY
20A. 250V.	L6-20P	5466-SS 5466-SSGRY	5466-SS-AN	5478-SS	5479-SS	5469-SS 5469-SSGRY

CR prefix indicates Corrosion Resistant version.

16402-2.10.5

5266-SS | 5266-SS-AN | 5278-SS | 5279-SS | 5269-SS

See Technical Section for Dimensions.

Item #1

STRAIGHT BLADE DEVICES

HARD USE AND SPECIFICATION GRADE

15 & 20A., 125 & 250V. — U.L. & CSA LISTED

Page 1 of 4

DUPLEX RECEPTACLES

2-POLE 3-WIRE

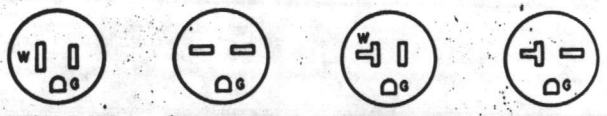

NEMA 5-15R Receptacle | NEMA 6-15R Receptacle | NEMA 5-20R Receptacle | NEMA 6-20R Receptacle

5252-I

HARD USE SPECIFICATION GRADE, SIDE AND BACK WIRED SELF-GROUNDING

RATING A.	RATING V.	NEMA CONFIG. NUMBER	DESCRIPTION	CATALOG NUMBERS BROWN	CATALOG NUMBERS IVORY
15	125	5-15R	*Duplex	5252	5252-I
15	250	6-15R	Duplex	5652	5652-I
20	125	5-20R	*Duplex	5352	5352-I

* Available in colors other than Brown and Ivory. Specify Brown catalog number with color suffix as follows: Black-BK, Gray-GRY, White-W.

5890-I

HARD USE, SIDE-WIRED ONLY, SELF GROUNDING

15	125	5-15R	*Duplex	5242	5242-I
15	250	6-15R	Duplex	5642	5642-I
15	125/250	5/6-15R	Duplex, Combination	5290	5290-I
20	125	5-20R	*Duplex	5342	5342-I
20	125/250	5/6-20R	Duplex, Combination	5890	5890-I

* Available in colors other than Brown and Ivory. Specify Brown catalog number with color suffix as follows: Gray-GRY, White-W.

5250

SPECIFICATION GRADE, SIDE-WIRED ONLY

15	125	5-15R	Duplex, not Self-Grounding	5250	5250-I
15	125	5-15R	Duplex, Self-Grounding	5250-S	5250-SI
20	125	5-20R	Duplex, not Self-Grounding	5350	5350-I
20	125	5-20R	Duplex, Self-Grounding	5350-S	5350-SI

*Above receptacles available in colors other than Brown. Specify base catalog number with color suffix as follows: Gray-GRY, White-W.

See Technical Section for Dimensions.

SINGLE RECEPTACLES

5351-I

5371-I

5258

5358

SINGLE RECEPTACLES, SIDE-WIRED

RATING A.	RATING V.	NEMA CONFIG. NO.	DESCRIPTION	CATALOG NUMBERS BROWN	CATALOG NUMBERS IVORY
15	125	5-15R	Single*	5251	5251-I
15	250	6-15R	Single	5651	5651-I
20	125	5-20R	Single*	5351	5351-I
20	250	6-20R	Single	5851	5851-I

SINGLE RECEPTACLES, RIGHT ANGLE SLOTS

20	125	CSA	Single, Side-Wired	5371	5371-I

SHORT STRAP SINGLE RECEPTACLES, SIDE-WIRED, NOT SELF-GRDG.

15	125	5-15R	Screw Spacing 1.750"	5258	5258-I
15	250	6-15R	Screw Spacing 1.750"	5658	5658-I
20	125	5-20R	Screw Spacing 1.750"	5358	5358-I
20	250	6-20R	Screw Spacing 1.750"	5858	5858-I

Hospital Grade short strap receptacles on page C-3.

* Available in colors other than Brown and Ivory. Specify Brown catalog number with color suffix as follows: Black-BK, Gray-GRY, White-W. 16402-1.3.1a

See Technical Section for Dimensions.

SIERRA™ WALL PLATES

STANDARD SIZE PLASTIC & METAL

SPECIFICATION GRADE — UL & CSA LISTED

DESCRIPTION	PLASTIC			METAL	
	COLOR	SMOOTH CAT. NOS.	DECOR RIBBED CAT. NOS.	MATERIAL	CAT. NOS.
TOGGLE SWITCH					
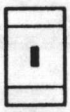 **ONE GANG** 1 Toggle Switch	IVORY BLACK GRAY RED WHITE BROWN	P-1-I P-1BK P-1GRY P-1RED P-1W P-1X	D-1-I D-1BK D-1GRY D-1RED D-1W D-1X	ALUM BRASS 430S/S 302S/S	A-1 B-1 S-1 S-1N
TWO GANG 2 Toggle Switches	IVORY BLACK GRAY RED WHITE BROWN	P-2-I P-2BK P-2GRY P-2RED P-2W P-2X	D-2-I D-2BK D-2GRY D-2RED D-2W D-2X	ALUM BRASS 430S/S 302S/S	A-2 B-2 S-2 S-2N
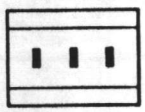 **THREE GANG** 3 Toggle Switches	IVORY BLACK GRAY RED WHITE BROWN	P-3-I P-3BK P-3GRY P-3RED P-3W P-3X	D-3-I D-3BK D-3GRY D-3RED D-3W D-3X	ALUM BRASS 430S/S 302S/S	A-3 B-3 S-3 S-3N
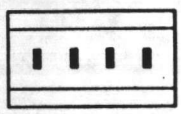 **FOUR GANG** 4 Toggle Switches	IVORY GRAY WHITE BROWN	P-4-I P-4GRY P-4W P-4X	D-4-I D-4GRY D-4W D-4X	ALUM BRASS 430S/S 302S/S	A-4 B-4 S-4 S-4N
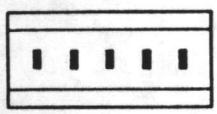 **FIVE GANG** 5 Toggle Switches	IVORY GRAY WHITE BROWN	P-5-I P-5GRY P-5W P-5X	D-5-I D-5GRY D-5W D-5X	ALUM BRASS 430S/S 302S/S	A-5 B-5 S-5 S-5N
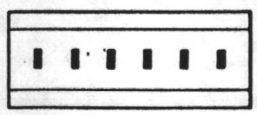 **SIX GANG** 6 Toggle Switches	IVORY GRAY WHITE BROWN	P-6-I P-6GRY P-6W P-6X	D-6-I D-6GRY D-6W D-6X	ALUM BRASS 430S/S 302S/S	A-6 B-6 S-6 S-6N
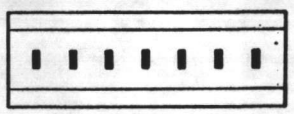 **SEVEN GANG** (METAL ONLY) 7 Toggle Switches	IVORY GRAY WHITE BROWN	*S-601-I *S-601GRY *S-601W *S-601X		BRASS 430S/S	B-601 S-601
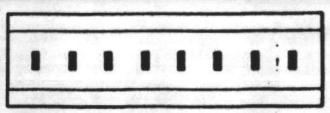 **EIGHT GANG** (METAL ONLY) 8 Toggle Switches	IVORY GRAY WHITE BROWN	*S-602-I *S-602GRY *S-602W *S-602X		BRASS 430S/S	B-602 S-602

*430 Stainless Steel painted

SIERRA™ WALL PLATES

STANDARD SIZE PLASTIC & METAL

SPECIFICATION GRADE — UL & CSA LISTED

DESCRIPTION	PLASTIC			METAL	
	COLOR	SMOOTH CAT. NOS.	DECOR RIBBED CAT. NOS.	MATERIAL	CAT. NOS.
TOGGLE SWITCH					
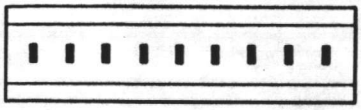 **NINE GANG** (METAL ONLY) 9 Toggle Switches	IVORY GRAY WHITE BROWN	*S-603-I *S-603GRY *S-603W *S-603X		430S/S	S-603
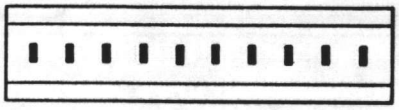 **TEN GANG** (METAL ONLY) 10 Toggle Switches	IVORY GRAY WHITE BROWN	*S-604-I *S-604GRY *S-604W *S-604X		430S/S	S-604
ELEVEN GANG (METAL ONLY) 11 Toggle Switches	IVORY GRAY WHITE BROWN	*S-605-I *S-605GRY *S-605W *S-605X		430S/S	S-605
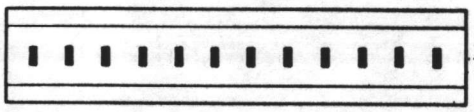 **TWELVE GANG** (METAL ONLY) 12 Toggle Switches	IVORY GRAY WHITE BROWN	*S-606-I *S-606GRY *S-606W *S-606X		430S/S	S-606
DUPLEX RECEPTACLE					
ONE GANG 1 Duplex Outlet	IVORY BLACK GRAY RED WHITE BROWN	P-8-I P-8BK P-8GRY P-8RED P-8W P-8X	D-8-I D-8BK D-8GRY D-8RED D-8W D-8X	ALUM BRASS 430S/S 302S/S	A-8 B-8 S-8 S-8N
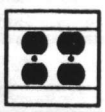 **TWO GANG** 2 Duplex Outlets	IVORY BLACK GRAY RED WHITE BROWN	P-82-I P-82BK P-82GRY P-82RED P-82W P-82X	D-82-I D-82BK D-82GRY D-82RED D-82W D-82X	ALUM BRASS 430S/S 320S/S	A-82 B-82 S-82 S-82N
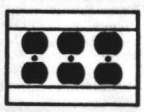 **THREE GANG** 3 Duplex Outlets	IVORY GRAY WHITE BROWN	P-83-I P-83GRY P-83W P-83X	D-83-I D-83GRY D-83W D-83X	ALUM BRASS 430S/S 320S/S	A-83 B-83 S-83 S-83N
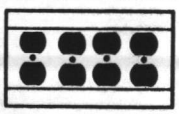 **FOUR GANG** 4 Duplex Outlets	IVORY GRAY WHITE BROWN	P-84-I P-84GRY P-84W P-84X		BRASS 430S/S 302S/S	B-84 S-84 S-84N

*430 Stainless Steel painted

Item #7
Page 1 of 3

SIERRA™ WALL PLATES

STANDARD SIZE PLASTIC & METAL

SPECIFICATION GRADE — UL & CSA LISTED

DESCRIPTION	PLASTIC			METAL	
	COLOR	SMOOTH CAT. NOS.	DECOR RIBBED CAT. NOS.	MATERIAL	CAT. NOS.
DUPLEX RECEPTACLE					
FIVE GANG 5 Duplex Outlets				BRASS 430S/S 302S/S	B-85 S-85 S-85N
SIX GANG 6 Duplex Outlets				BRASS 430S/S 302S/S	B-86 S-86 S-86N
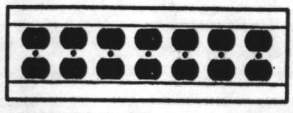 SEVEN GANG 7 Duplex Outlets				BRASS 430S/S	B-608 S-608
EIGHT GANG 8 Duplex Outlets				BRASS 430S/S	B-6082 S-6082
SINGLE RECEPTACLE					
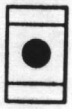 ONE GANG 1 Single Outlet	IVORY GRAY WHITE BROWN	P-7-I P-7GRY P-7W P-7X	D-7-I D-7GRY D-7W D-7X	ALUM BRASS 430S/S 302S/S	A-7 B-7 S-7 S-7N
TWO GANG 2 Single Outlets	IVORY GRAY WHITE BROWN	P-72-I P-72GRY P-72W P-72X	D-72-I D-72GRY D-72W D-72X	ALUM BRASS 430S/S 302S/S	A-72 B-72 S-72 S-72N
THREE GANG 3 Single Outlets	IVORY GRAY WHITE BROWN	P-73-I P-73GRY P-73W P-73X	D-73-I D-73GRY D-73W D-73X	ALUM BRASS 430S/S 302S/S	A-73 B-73 S-73 S-73N
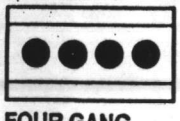 FOUR GANG 4 Single Outlets				BRASS 430S/S 302S/S	B-74 S-74 S-74N

16402-2.8

16402-1.3.1g

FULLY ADJUSTABLE FLOOR BOXES

880 Series

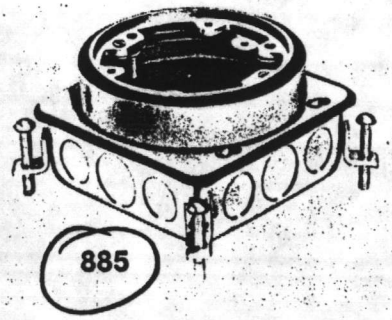

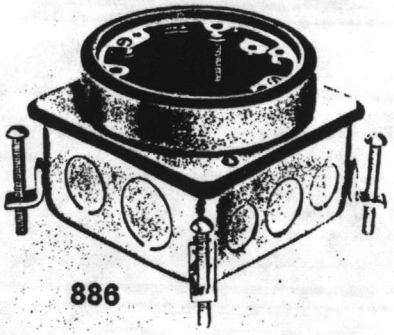

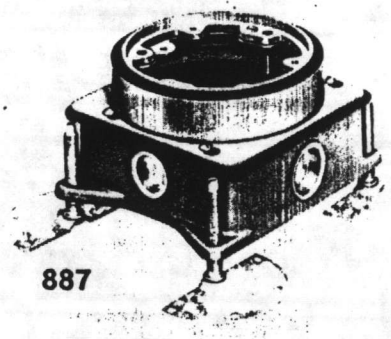

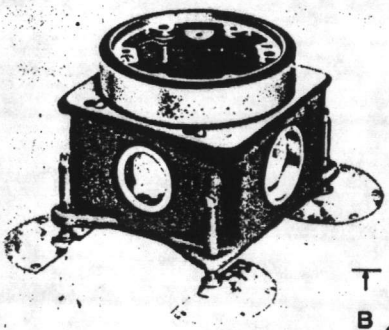

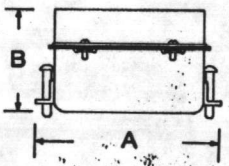

Class	Catalog No.	Dimensions A	Dimensions B	Adjustment Before The Pour	Adjustment After The Pour	Capacity Cubic In.	Knockouts Or Conduit Openings
Concrete-Tight (Steel)	885	4 1/16"	2½"	1¾"	½"	32	Four Sides—2-½", 1-¾" Bottom—3-½", 2-¾"
	886	4 1/16"	3⅛"	1¾"	½"	46	Two Sides—2-½", 1-¾" Two Sides—1-¼", 1-1" Bottom—3-½", 2-¼"
Watertight (Cast Iron)	887	4 1/16"	3⅛"	2"	½"	25	Two Sides—1-½" Two Sides—1-⅜"
	889	4 1/16"	3 1/16"	2"	½"	40	Two Sides—1-1" Two Sides—1-1¼"

All 880 Series floor boxes have 10° angular adjustment after the concrete pour.

All 880 Series floor boxes can accommodate a single or duplex receptacle mounted flush with the floor.

COVERPLATES FOR 880 SERIES FLOOR BOXES—CARPET

BRASS (Furnished with gasket and 3 brass screws)

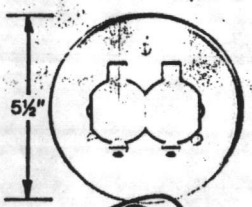

895
Duplex cover plate with flip lids

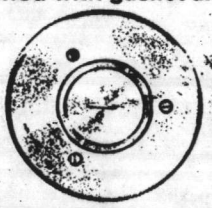

896CK
2¼" opening

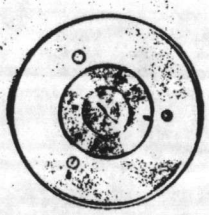

896CK-1
2¼" x 1" combination

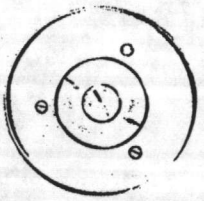

896CK-¾
2¼" x ¾" combination

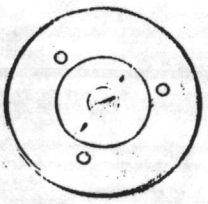

896CK-½
2¼" x ½" combination

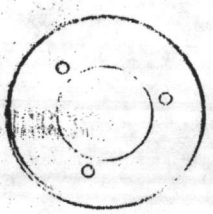

896
Cover plate less abandon plug

COVERPLATES FOR 880 SERIES FLOOR BOXES—TILE

BRASS (Furnished with gasket and 3 brass screws)

895T
Duplex cover plate with flip lids

896TCK-1
2¼" x 1" combination

Configurations Also Available:

896T	Less abandon plug
896TCK	2¼" opening
896TCK-½	2¼" x ½" combination
896TCK-¾	2¼" x ¾" combination

POLYCARBONATE

Same as brass 895 except material is Lexan polycarbonate, in either black or brown.

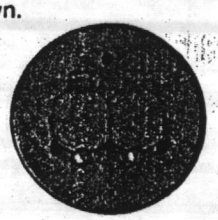

895P—BRN (Brown) or
895P—BLK (Black)

1640 2-2.4.1
1640 2-1.3.1

2-3
1-3

Item #3
Page 1 of 3

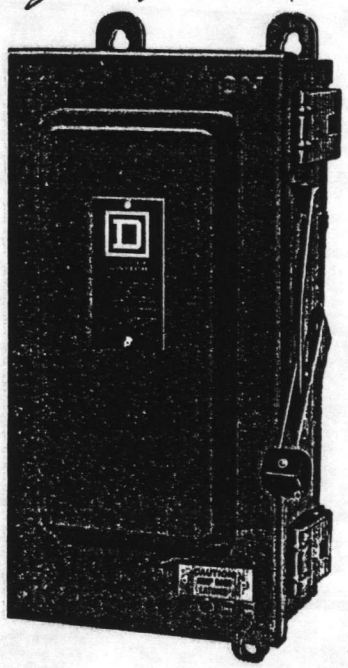

NEMA 12

Heavy Duty Safety Switches

CONTENTS

Description	Class	Pages
Application Data	3110	2-6
Suggested Specifications	3110	7
Dimensions	3110	8-11

16402-1.3.1 c

SQUARE D COMPANY

16402 - 2.9.3

CLASS 3110

HEAVY DUTY SAFETY SWITCHES

APRIL, 1982

APPLICATION DATA

Description: Heavy Duty safety switches provide a means for disconnecting a load from its supply, or for opening and closing a circuit. When equipped with fuses, overcurrent protection and short circuit protection are also provided.

Application: These switches are designed for commercial and industrial applications on systems up to 600 volts ac or dc with up to 200,000 RMS symmetrical amperes available fault current.

Ratings: Heavy Duty Switches are rated 30 through 1,200 amperes, 600 volts ac or dc maximum. Fusible switches are for use on systems having up to 200,000 RMS symmetrical amperes available fault current when Class R, Class J or Class L fuses are installed and when a proper rejection means is employed to prevent installation of non-current limiting fuses. 30 through 600 ampere switches are horsepower rated. The "standard" horsepower rating of these switches is the rating of the largest single-speed motor, based on locked-rotor indicating code letters A through E, which can be started under normal service conditions using fuses which have been selected without regard to their time-delay characteristics.

The "maximum" horsepower rating of these switches is the rating of the largest motor whose locked-rotor current the switch can safely interrupt based on locked-rotor indicating code letters A through J for 50 HP and less or A through E above 50 HP. Fuses with appropriate time-delay characteristics may be required to carry starting current without opening.

Standards: Underwriters Laboratories listed under File E2875. Suitable for use as Service Equipment for ungrounded systems, or for grounded systems when equipped with field or factory installed neutral assembly, or field installed grounding kit. Comply with NEMA Standard KS1-1975 for type HD. Meet Federal Specification WS-865c for Heavy Duty switches.

Systems:

- Two or three fusible switched poles with or without insulated, groundable neutral.
- Four fusible switched poles without insulated, groundable neutral.
- Two or three not fusible switched poles with or without insulated groundable neutral.
- Four not fusible switched poles without insulated, groundable neutral.
- Six not fusible switched poles without insulated, groundable neutral.

Insulated, groundable solid neutral assemblies are available for field installation in two and three pole, 30 through 1200 amperes, fusible and not fusible switches supplied without a factory installed solid neutral.

Equipment grounding kits for field installation in 30 through 200 ampere switches are available. Kits are suitable for terminating one incoming and one outgoing equipment grounding conductor.

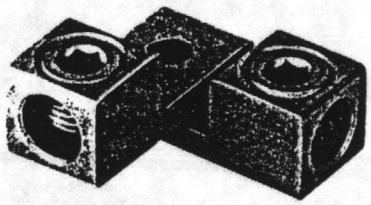

FIELD INSTALLABLE
EQUIPMENT GROUNDING KIT

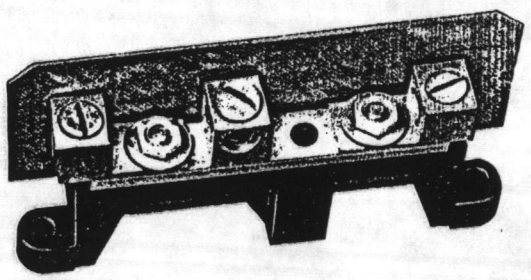

FIELD INSTALLABLE
INSULATED, GROUNDABLE NEUTRAL

HORSEPOWER RATINGS

Ampere Rating	FUSIBLE														NOT FUSIBLE							
	240V ac				480V ac				600V ac				dc		240V ac		480V ac		600V ac		dc	
	Std.		Max.		Std.		Max.		Std.		Max.											
	1Ø	3Ø	1Ø	3Ø	1Ø	3Ø	1Ø	3Ø	1Ø	3Ø	1Ø	3Ø	250V	600V	1Ø	3Ø	1Ø	3Ø	1Ø	3Ø	250V	600V
30	1½	3	3	7½	3	5	7½	15	3	7½	10	20	5	15▲	5	10	7½	20	10	30	5	15
60	3	7½	10	15	5	15	20	30	10	15	25	50	10	30▲	10	20	20	50	25	60	10	25
100	7½	15	15	30	10	25	30	60	15	30	40	75	20	—	15	40	30	75	40	100	20	—
200	15	25	—	60	25	50	50	125	30	60	50	150	40	50▲	15	60	50	125	50	150	40	50
400	—	50	—	125	—	100	—	250	—	125	—	350	—	—	—	125	—	250	—	350	50	—
600	—	75	—	200	—	150	—	400	—	200	—	500	—	—	—	—	—	400	—	400	—	—

Maximum horsepower ratings may require the use of fuses with appropriate time delay characteristics.
▲ Maximum dc horsepower ratings.

Square D Company, 1982

HEAVY DUTY SAFETY SWITCHES

APPLICATION DATA

Construction: Visible blades for positive indication that the switch is OFF. Blades, jaws and all current carrying parts are plated for cool operation and corrosion resistance.

Insulators are made of strong, moisture resistant materials.

Fuse clips are plated, spring-reinforced copper

All Heavy Duty switches have front removeable, screw-type mechanical lugs. Lugs on switches in NEMA 1, 3R and 4X enclosures are suitable for aluminum or copper wire (Al-Cu). Lugs on switches in NEMA 4 & 5 and 12 enclosures are suitable for copper conductors only. Optional aluminum compression lugs are available for field installation in 100 thru 600 ampere switches.

Heavy Duty switches use a quick-make, quick-break spring driven mechanism. The operating handle is an integral part of the operating mechanism and indicates if the switch is OFF (handle down) or ON (handle up.)

NEMA 7 & 9 devices are molded case switches in hazardous location enclosures.

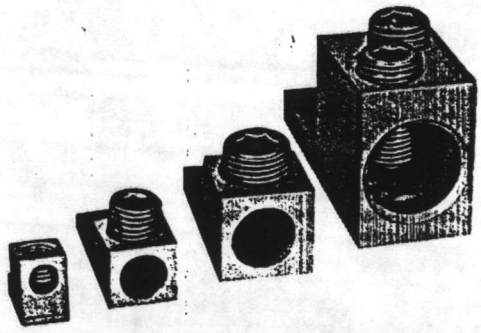

MECHANICAL LUGS

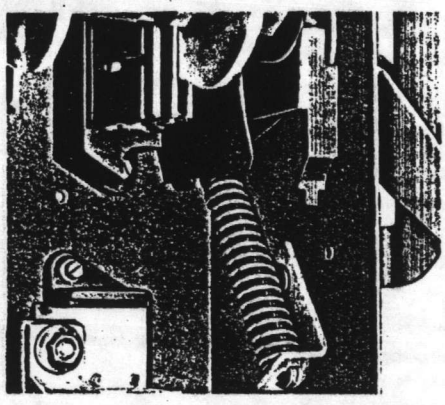

SPRING DRIVEN MECHANISM

VISIBLE BLADES

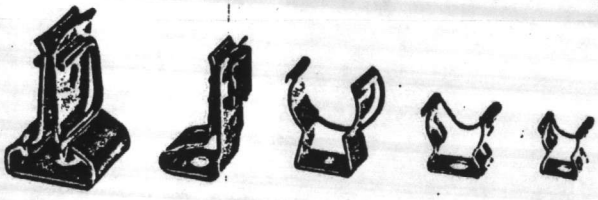

SPRING REINFORCED FUSE CLIPS

NEMA 1, 3R, 4X

Ampere Rating	Conductors Per Phase	Mechanical Lug UL Listed Wire Size
30	1	#14-2 Cu or #12-2 Al
60	1	#14-2 Cu or #12-2 Al
100	1	#6-1/0 Al or $10-1/0 Cu
200	1	#6-300 MCM Al or Cu
400	1 or 2	#3/0-750 MCM Al or Cu 1-#3/0-750 MCM Al or Cu and 1-#6-300 MCM Al or Cu
600	2	#3/0-500 MCM Al or Cu
800	3	#4-750 MCM Al or Cu
1200	4	#4-750 MCM Al or Cu

NEMA 4 & 5, 7 & 9, 12

Ampere Rating	Conductors Per Phase	Mechanical Lug UL Listed Wire Size
30	1	#14-4 Cu
60	1	#14-4 Cu■
100	1	#14-0 Cu■
200	1	#6-250 MCM Cu■
400	1 or 2	#1/0-600 MCM Cu #1/0-600 MCM Cu and #6-250 MCM Cu
600	2	#4-350 MCM Cu

■ NEMA 7 & 9, 60 Amp and 100 Amp switches have lugs suitable for #14-0 Cu or #12-0 Al wire. NEMA 7 & 9, 200 Amp switches have lugs suitable for #4-300 MCM Al or Cu wire.

AC SWITCHES

STANDARD SPECIFICIATION GRADE

SIDE-WIRED — 15 & 20A., 120-277V. AC

APPLICATION:

The 501 and 2221-S Series can be used at full rated capacity on tungsten filament, fluorescent and H.I.D. lighting loads and on motor loads to 277V. at 80% of rated amperage. 501 Series is recommended for general application in commercial, light industrial and institutional installations.

HP CONVERSION TABLE
501 & 2221-S SERIES

15A.	½ HP at 120V. AC 2 HP at 240V. AC
20A.	1 HP at 120V. AC 2 HP at 240V. AC

COMPLIANCES:

501 Series & 2221-S Series: U.L. Listed.

See Technical Section for Dimensions.

FEATURES:

- One-piece brass alloy contact arm.
- Large silver alloy contacts.
- Fast "make" and positive "break" action minimizes arcing.
- Neoprene toggle bumpers for quiet operation.
- Side-wired terminal screws accept #14 to #10 AWG copper or copper-clad conductors.
- Grounding terminals optionally available.
- Shallow design for ease of wiring.

503

RATING A.	RATING V. AC	HANDLE COLOR	CATALOG NUMBERS SINGLE POLE	DOUBLE POLE	THREE WAY	FOUR WAY
15	120-277	Brown	501	502	503	504
15	120-277	Ivory	501-I	502-I	503-I	504-I
20	120-277	Brown	521	522	523	524
20	120-277	Ivory	521-I	522-I	523-I	524-I

For toggle colors other than Brown specify brown catalog number with color suffix as follows: Black-**BK**, Gray-**GRY**, White-**W**.

LOCK SWITCHES

15	120-277	Gray	501-L	502-L	503-L	504-L
20	120-277	Gray	521-L	522-L	523-L	524-L

All 501 series switches are available with grounding terminals. To order specify catalog number with "G" suffix. **EXAMPLES: 501-G, 521-BKG.**

LOCK SWITCH KEYS (One key furnished with each switch).

DESCRIPTION	CAT NOS.
Fits current production	500K
Fits switches made 1976-1982	1498-NT
Fits switches made prior to 1976	1498

500K 1498-NT 1498

2221-S SERIES, IVORY ONLY

FEATURES:

- Available in lighted and pilot light versions.
- Very light but positive action.
- Fits standard toggle wall plates.
- Screw terminals will accept #14 to #12 AWG copper or copper-clad conductors.

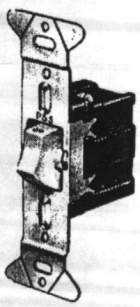

2221-S

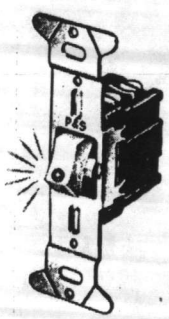

2221-SP

RATING A.	RATING V. AC	HANDLE TYPE	CATALOG NUMBERS SINGLE POLE	THREE WAY
15	120-277	Narrow Rocker	2221-S	2223-S
20	120-277	Narrow Rocker	2251-S	2253-S
15	120	Lighted Rocker	2221-SL	2223-SL
15	120	Pilot Light	2221-SP	—
20	120	Lighted Rocker	2251-SL	2253-SL
20	120	Pilot Light	2251-SP	—

WITH GROUNDING TERMINAL

15	120-277	Narrow Rocker	2221-SG	2223-SG

MOMENTARY CONTACT

A.	HP	V. AC	DESCRIPTION	CAT. NO.
10	3/4	120-240	Single Pole, Double Throw, Center-OFF	2225-S

TAB PLACEMENT HERE

DESCRIPTION:

Section V

☑ **Tab page did not contain hand written information**

☐ **Tab page contained hand written information**
***Scanned as next image**

Confidential Records Management, Inc.
New Bern, NC
1-888-622-4425
9/08

PROJECT - APPLIED INSTRUCTION BUILDING

CONTRACT # - N62470-84-C-4087

LOCATION - CAMP JOHNSON
CAMP LEJEUNE, NC 28542

ELECTRICAL CONTRACTOR - BRYANT DURHAM ELECTRIC CO., INC.
DURHAM, NC

ELECTRICAL DISTRIBUTOR - MOORE ELECTRIC SUPPLY, INC.
RALEIGH, NC

SUBMITTAL FOR:

ITEM #	TYPE	MANUFACTURER	CATALOG #
1	"A"	Kurt Versen	V7220-70-277V
2	"B"	Miller/Hubbell	EC2191-S4N-277V ESB MKIII
3	"C"	" "	DA2101-04-277V ESB MBIII
4	"D"	" "	ET3119-S4N-277V ESB MKIII
5	"E"	" "	ET4119-S4N-277V ESB MKIII
6	"F"	" "	DA1101-04-277V ESB MKIII
7	"J"	" "	LSLP40 277V
8	"L"	" "	LSLP40-OSS 277V
9	"M"	" "	IL-2101-04-277V MKIII ESB
10	"K"	Kenall	4450 MPS 120V
11	"H"	"	7170 277V
12a*	"X-1"	Chloride	BKFL1GW
12b*	"X-2"	"	BKFL1GW-4
12c*	"X-3"	"	BKFL1GW
12d*	"X-5"	"	BKFL2GW - ARROW Direction to verified by contractor
12e*	"T"	"	NMF50-IDCHY-2
12f*	"G-6V"	"	CMF50-DCHY1-ML-V-16/3
12g*	"G-12V"	"	TMF50-DNY2-ML-V-16/3
12h*	"G"	"	Remote heads
13	"N"	Kurt Versen	V5637-70-277V-DL
14	Ballasts - Mark III Energy Saving CBN Certified		
15	Fluorescent Lamps		
16	Lighting Contactors		
17	Photo-cell Switch		
18	Time Switch		
19	HID Lamps		

*Emergency lighting equipment - see items #12a thru 12h

Item 2, 4 + 5

16510-1.4.1a

16510-2.4

VL-3 → Type B Miller #EC2191-S4N-277V MK III ESB CU = .66

VL-3 → Type D Miller #ET3119-S4N-277V MK III ESB CU = .73

VL-3 → Type E Miller #ET4119-S4N-277V MK III ESB CU = .71

Note: "19" in catalog number is .156" lens
"91" in catalog number is .125" lens

Item 12 a, b, c, d

16510 - 1.4.1 a

16510 - 2.9

12 A TYPE X-1 Chloride #BKFL1GWx

b TYPE X-2 Chloride #BKFL1GW4

c TYPE X-3 CHLORIDE #BKFL1GWx

d TYPE X-5 Chloride #BKFL2GWx

NOTE: "x" in catalog number is arrow direction--to be verified by Contractor.

Per detail Sheet E-7

TYPE A KURT VERSEN #V7220-70-277V Item #1

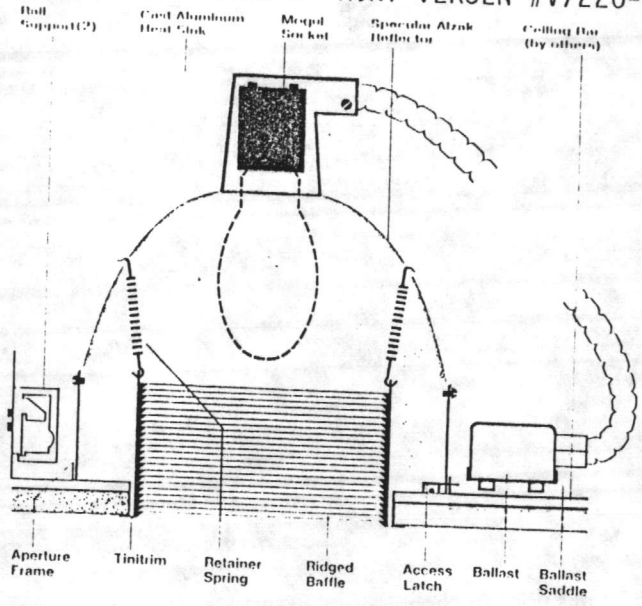

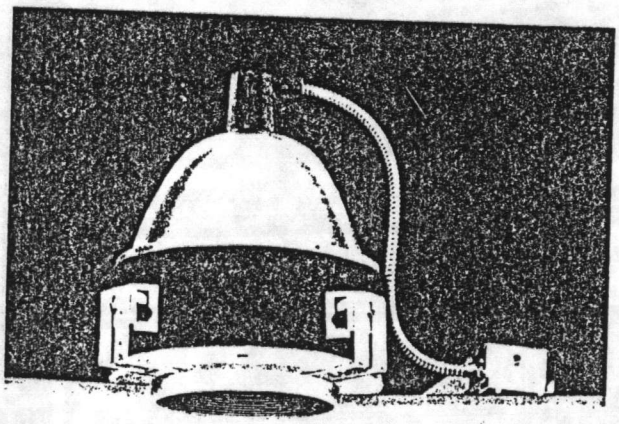

V7220-70120
V7220-100120
V7221-150120

16510-1.4.1a
16510-2.4

V6

High Pressure Sodium

Applications
Well shielded downlights for general purpose use. Suitable wherever area lighting is required.

Design Features
An Alzak reflector directs lamp output to a ridged baffle aperture. Deep, sharp grooves appear as a soft side wall glow. The cast heat sink limits operating temperature. Bottom service only.

Ballast
Auto-transformer high power factor constant wattage ballasts are standard at 120V or 277V, other voltages available. Thermosetting fill for superior heat dissipation and sound absorption makes all ballasts run unusually cool and quiet. Individually cased for detached location adjacent to the fixture. Remote location separates ballast heat from the fixture. Ballast is thermally protected and supplied with a universal mount saddle, vibration dampeners, 4 feet of flexible conduit and connectors. Operating temperature range from –20°F to 105°F. UL listed. For inaccessible ceilings see accessories listing.

16510 2.2.2

Finish
The ridged baffle is optical matte black with matte white baked enamel trim.

General
Fixtures are individually packed, ready for installation with 4½ feet of insulated wire leads and ceiling mounting brackets. Ballast saddle assembly has a 22 cubic inch splice box suitable for 75°C wiring. UL listed, union made IBEW.

Accessories
For 27" support rails, add R2 to catalog number.
For 52" support rails, add R5 to catalog number.
For Q150W T-4 emergency circuit, add EC to number.
For ballast fuse, add U to catalog number.
For damp label, add DL to catalog number.
For protective lamp shield, add LS to number.
For scallop shield, add SS to catalog number. Not available when used with slope adaptor.
For instant start of auxiliary lamp on start up or if outage occurs, add AO to catalog number.
For sloped ceilings of 30°, add T9 to number.
V7220-70120 T9 has 9½" aperture.
V7220-100120 T9 has 9½" aperture.
V7221-150120 T9 has 11½" aperture.
For inaccessible ceilings, add IN to catalog number.
Special ballast release is provided for service.
For special narrow distribution fixtures as used in atriums and soffits, see Atrium brochure in Z section.

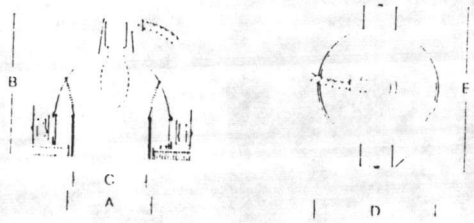

Catalog Number	A Recess Opening	B Recess Depth	C Aperture	D Minimum Width	E Maximum Width	Watts	Type
V7220-70120*	8¾" 222mm	14½" 368mm	8¼" 210mm	13" 330mm	16¼" 413mm	70	E-23½, BT-25 Coated
V7220-100120*	8¾" 222mm	14½" 368mm	8¼" 210mm	13" 330mm	16¼" 413mm	100	E-23½, BT-25 Coated
V7221-150120*	9½" 241mm	18½" 470mm	9" 229mm	14½" 362mm	18" 457mm	150	E-23½, BT-25 Coated, 55 Volt Arc

*Supplied with 120V ballast. For 277V change the last digits of the catalog number from 120 to 277. Example: V7220-70277. Show other voltages similarly.

Brightness

Catalog Number	Lamp	80°	70°	60°	50°
V7220-70120	70W E-23½/D	7	11	22	472
V7220-100120	100W E-23½/D	11	16	20	644
V7221-150120	150W E 23½/D	36	72	100	1,721

Data in footlamberts

Per Detail Sheet E-7

kurt versen
Kurt Versen Company Incandescent & HID Lighting
Westwood, New Jersey 07675

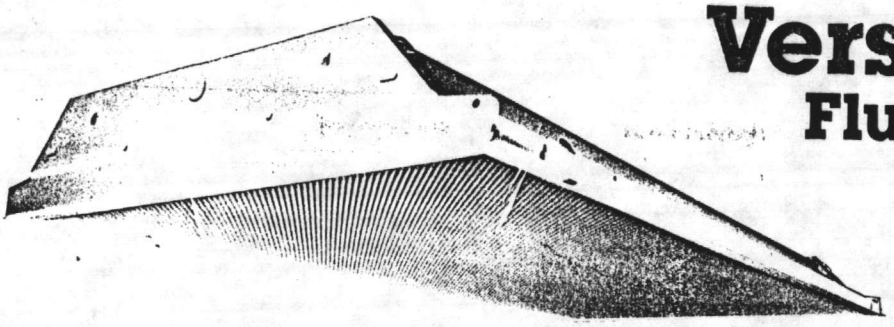

Versaline Flush Steel Door

16510-1.4.1a
16510-2.4

ET-4192-S4N (Without Heat Transfer)
U.L. Listed

ENERGY SAVING BALLAST
SOUND RATING A H.P.F.

FEATURES

- Available with heat transfer through lamp compartment

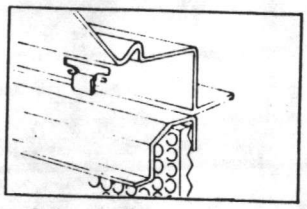

- Safety hinges
  Provide selective hinging from either side.

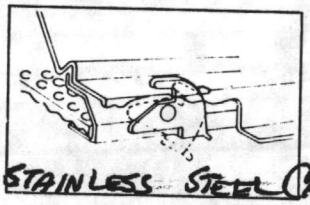

STAINLESS STEEL

- Unobtrusive positive finger latches
  Force door from its seating when operated.

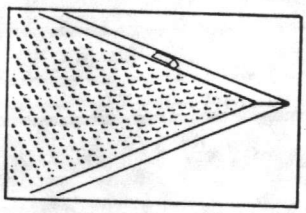

- Steel framed doors
  Have internally braced, mitered corners.

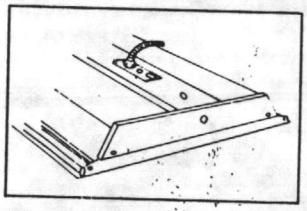

- Top access wiring is standard.
  Factory installed adaptor plate facilitates speedy wiring from top of fixture without opening wireway. Has UL listed provision for separate grounding.

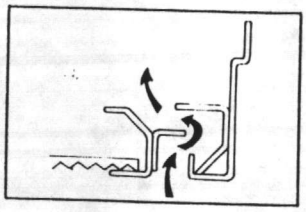

- Heat transfer doors
  Have black baffled opening at each end to permit air entrance to lamp compartment with 3 changes in direction of air flow.

DIMENSIONS

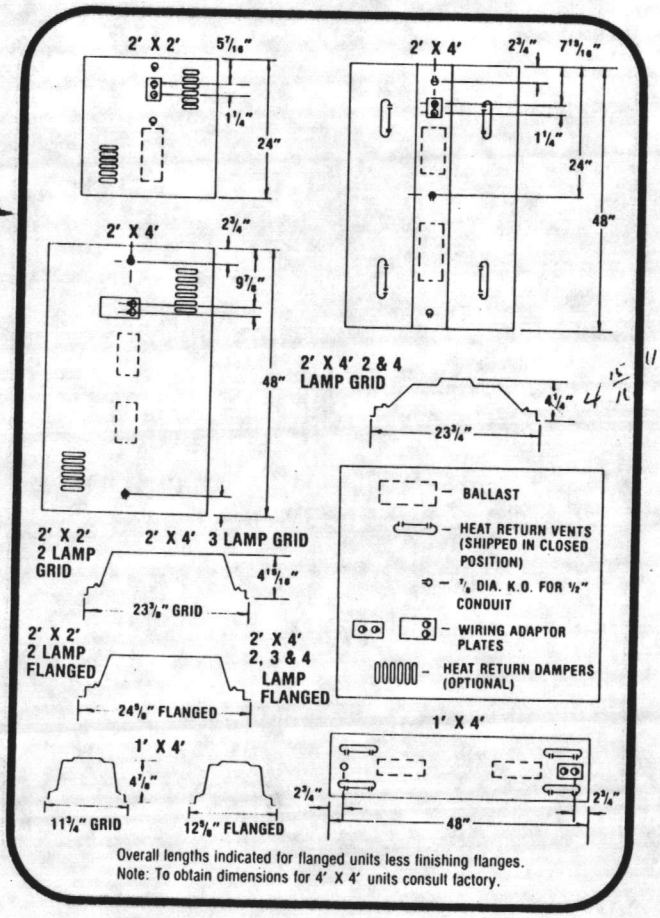

Overall lengths indicated for flanged units less finishing flanges.
Note: To obtain dimensions for 4' X 4' units consult factory.

SPECIFICATIONS

HOUSING 22 GA. STEEL
DOOR FRAME 20 GA STEEL

Housing, end plates, socket support straps, and wireway cover are die-formed steel, factory assembled. Ballasts are internally protected, Class P, CBM Rapid Start Types.

Sockets — Individually replaceable from installed units.

Wireway Cover — Snap-on type retained by lances in housing; easily removable without tools.

Bend-out Flaps — On 2 and 4 lamp units — For heat transfer and adjustment located in top of housing. Flaps are applicable to Heat Transfer units only and are shipped in closed position.

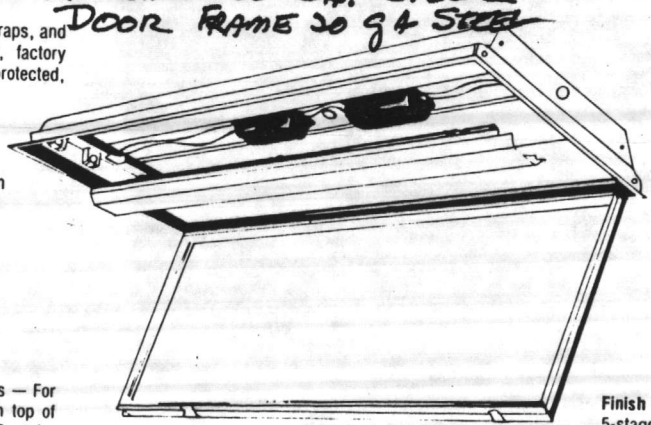

1/4" holes for independent wire support.

7/8" Diam. K.O. for through wiring.

Ballasts are attached to top of housing with two screws and extruded holes to assure maximum heat transfer and to facilitate ballast replacement.

Black Heat Transfer Baffle — heat transfer units only.

Finish — Steel parts other than plated treated by 5-stage phosphatizing process. All metal parts other than hardware finished in high temperature, 88% minimum reflectance, white baked enamel.

AFL-IBEW Labeled

ORDERING INFORMATION

Nominal Size (Ft.) Width X Length	40W RS Number Lamps (not included)	Total Watts (including auxiliary)	Approx. Net Weight (lbs.)	CATALOG NUMBERS (For 110-125 Volt, 60 Hertz) Without Heat Transfer	With Heat Transfer
GRID TROFFER WITH M-2 ACRYLIC LENS				**NEMA Type "G"**	
1 X 4	2	92	26	EC2192-S4N	EC2192-S4H
	3	144	30	EC3192-S4N	EC3192-S4H
2 X 2	2-U†	92	26	ED2692-S2N	ED2692-S2H
2 X 4	2	92	29	ET2192-S4N	ET2192-S4H
	3	144	43	ET3192-S4N	ET3192-S4H
	4	184	33	ET4192-S4N	ET4192-S4H
FLANGED UNITS				**NEMA Type "F"**	
1 X 4	2	92	26	EF2192-S4N	EF2192-S4H
	3	144	30	EF3192-S4N	EF3192-S4H
2 X 2	2-U	92	26	EH2692-S2N	EH2692-S2H
2 X 4	2	92	39	EH2192-S4N	EH2192-S4H
	3	144	43	EH3192-S4N	EH3192-S4H
	4	184	43	EH4192-S4N	EH4192-S4H

To order available lens types and plaster frames, please see pages 15 and 16.
†Will be furnished with fixed spacing for 6" lamps unless specified for 3⅜" lamps.

ACCESSORIES

Accessories	Catalog Number
Support Clips (4 clips per set)	
2' X 4', (side or end mounting)	CX101420
2' X 2', 1' X 4' (side mounting only)	CX80449
Light Locks*	ET101511

*Supplied as standard in all 2' X 4' units except 2 and 4 lamp grid units. Order 2 per fixture if required.

Application Data

VERSALINE FLUSH STEEL DOOR WITH M-2 ACRYLIC LENS

ILLUMINATION CALCULATIONS — For desired Illumination Level determine Area per Luminaire by Method A or B below and make layout to obtain this area. Total number of units required may be obtained from layout or by dividing Room Area by Area per Luminaire. For satisfactory illumination uniformity, spacing should not exceed 1.4 X mounting height above work plane.

Method A (Recommended)

$$\text{Area} = \frac{(\text{Lamp Lumens per Luminaire}) \times \text{C.U.}) \times (\text{M.F.})}{\text{Maintained Footcandles Desired}}$$

C.U. — Obtain from table below
M.F. — Good .75; Medium .70; Poor .65

ϱcc = Effective Ceiling Cavity Reflectance
ϱw = Wall Reflectance
RCR = Room Cavity Ratio

$$= \frac{5 \text{ (Height Above Work Plane)} \times \text{(Room Width + Room Length)}}{\text{(Room Width)} \times \text{(Room Length)}}$$

ϱcc	80			50			10		
ϱw	50	30	10	50	30	10	50	30	10
RCR	COEFFICIENTS OF UTILIZATION* 2-LAMP 2' X 4' UNIT FOR 20% EFFECTIVE FLOOR CAVITY REFLECTANCE								
1	.78	.75	.73	.73	.71	.69	.68	.66	.65
2	.70	.66	.62	.66	.63	.60	.62	.59	.58
3	.63	.58	.54	.60	.56	.52	.56	.53	.51
4	.56	.51	.47	.54	.49	.46	.51	.47	.45
5	.51	.45	.41	.48	.44	.40	.46	.42	.39
6	.46	.40	.36	.44	.39	.35	.42	.38	.35
7	.41	.35	.31	.40	.34	.31	.38	.34	.30
8	.37	.31	.27	.36	.31	.27	.34	.30	.27
9	.33	.27	.23	.32	.27	.23	.30	.26	.23
10	.30	.24	.21	.29	.24	.21	.28	.23	.20

*Table shows C.U.s for 2 lamp 2' X 4' units without heat transfer. Multiply C.U. by appropriate factor below for other sizes and lampings and by Relative Light Output. Multiplier from page 17 for heat transfer units.

.85 for 2 lamp 1' X 4'
.94 for 2 lamp 2' X 2'
.91 for 4 lamp 2' X 4'

See Lighting Design Data for determination of Effective Cavity Reflectances and other floor cavity reflectances.

Method B (For quick, approximate calculations)

Assuming Good Maintenance and reflectances of 20, 80, and 50% for floor cavity, ceiling, and walls respectively, obtain Area from table below. Where no area is given, unit is not considered applicable.

Luminaire and Lamp Description	Room Width / Mfg. Height†	Approximate Area per Luminaire (sq. ft.) 30 ft-c	50 ft-c	70 ft-c	100 ft-c	150 ft-c
1' X 4' 2-40w RS 3150 Lumens	4 or more	95	60	40	30	20
	2	85	50	35	25	15
	1	60	35	25	20	—
2' X 4' 2-40w RS 3150 Lumens	4 or more	115	70	50	35	25
	2	100	60	40	30	20
	1	70	45	30	20	15
2' X 4' 4-40w RS 3150 Lumens	4 or more	210	125	90	60	40
	2	180	105	75	55	35
	1	130	80	55	40	25
2' X 2' 2-40w U 2900 Lumens	4 or more	100	60	40	30	20
	2	85	50	35	25	15
	1	60	35	25	20	—

†Above Floor.

TYPE C MILLER #DA-2101-04-277V MK III ESB Item 3 16510 - 1.4.1a

Indigo 2,2-4

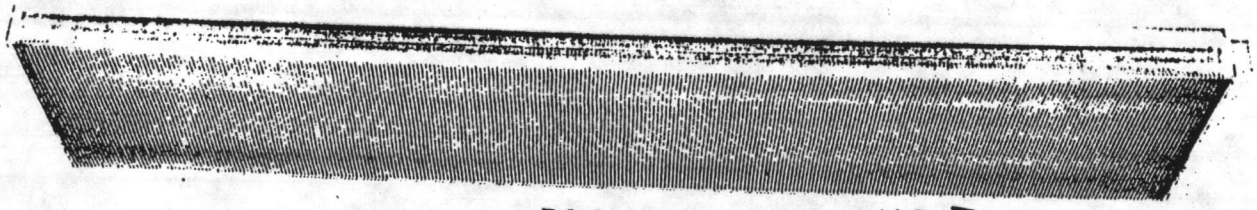

DA-2101-04 NLE-Type "B"
U.L. Listed and AFL-IBEW

FEATURES

- Completely shielded direct luminaire
- High efficiency and good brightness control
- Clean lines and shallow profile
- Units, U.L. listed for direct mounting on low density ceilings, ~~are available upon request~~
- Closure utilizes exclusive Miller lens pattern

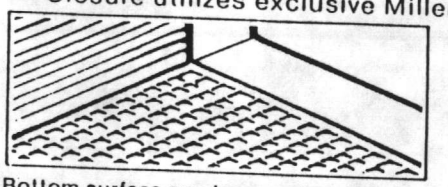

Bottom surface employs conical prismatic lens of crystal clear, tinted, or diffuse plastic. Clear lens provides highest utilization with good lamp concealment and a pleasing lighted appearance. Tinted lens satisfies IES VCP requirements.

- Prismatic control

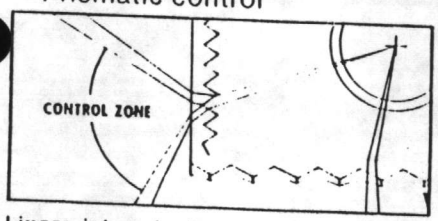

Linear, internal prisms along closure sides minimize side wall brightness to enhance lighted appearance. Prismatic bottom directs most of the light downward to the work plane or merchandise.

- Built-in connector—Positive alignment

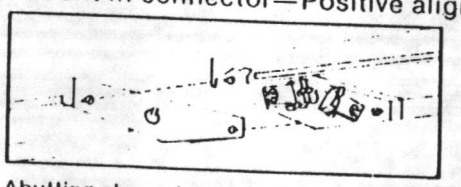

Abutting channels are easily and accurately connected and aligned by mating of key hole slots with captive screws on socket straps.

DIMENSIONS

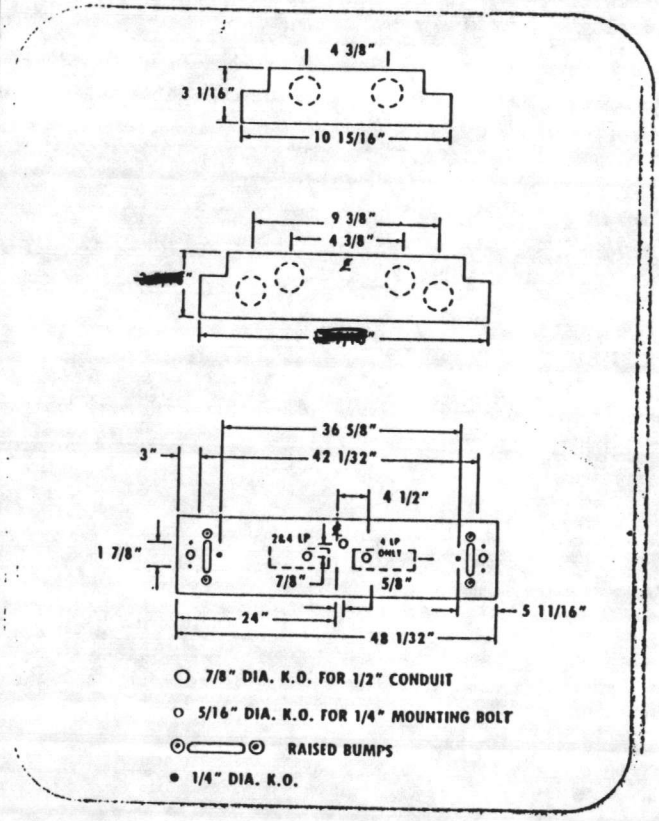

Energy Saving Ballast
High Power Factor
Sound A Rated

SPECIFICATIONS

Reflector-backplate—Rigidized by longitudinal bends which form sides and closure support flanges. Knockouts on top for surface-mounting screws, stem hangers, or conduit.

Closure—Four ft. extruded refractor of clear, tinted, or diffuse virgin Acrylic plastic with welded, injection molded ends. Miller exclusive lens pattern on bottom exterior; linear prisms on interior of sides. Formed with continuous lips which hook onto support flanges of channel assembly.

Finish—All steel surfaces other than plated parts anti-rust protected with 5-stage phosphate treatment and sprayed with baked-on white enamel having a reflectance of 88% or more and a controlled gloss surface. Optional flat black paint on channel sides and/or lower portion of decorative end caps.

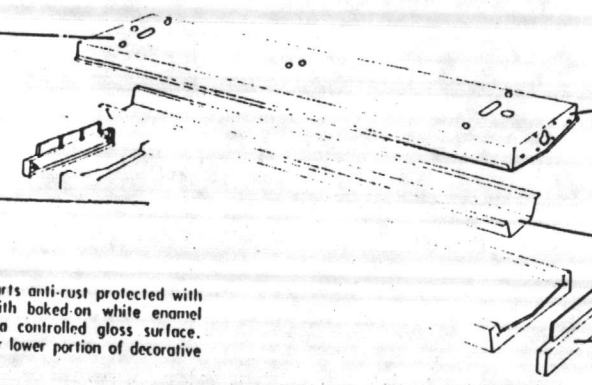

20 gauge
Channel Assembly—Die-formed steel reflector-backplate securely attached to socket strap-end plates. Steel endplate provides backing for snap-on lampholders. CBM, HPF series ballast(s), with thermal protection, wired with #AF wire neatly held. Solderless connectors.

20 gauge
Channel Cover—Four ft. section of die-formed steel.

Decorative End Caps—Molded, opaque High Impact plastic; stylized design. For use at row ends or on individually mounted units. All white or with optional black trim on lower portion.

ORDERING INFORMATION

Lamp Type	Unit Length (Nom.)	Number, Watts, & Length of Lamps (not included)	Total Watts (incl. aux.)	CATALOG NUMBERS* For 110-125 volt, 60-Hertz Equipment also available for other voltages and frequencies: With Clear Acrylic Prismatic Lens	With Diffuse Acrylic Closure	With M-2 Ultra Low Brightness Prismatic Acrylic Lens**	Approx. Net Wt. (lbs.)
Two Lamp Indigo 2							
Rapid Start	4'	2-40w, 48"	92	DA-2101-04	DA-2106-04	—	17
Two and Four Lamp Indigo 2-4							
Rapid Start	4'	2-40w, 48"	92	DB-2101-04	DB-2106-04	DB-2104-04	21
	4'	4-40w, 48"	184	DB-4101-04	DB-4106-04	—	25

*Standard units as listed are furnished with white end caps and white channel.
**Satisfies IES VCP Requirements.
Note: Units, U.L. listed for direct mounting on low density ceilings, are available upon request. Contact factory for information and pricing.

OPTIONS

Description	Catalog Number
Black End Caps and Black Channel	B†
Black End Caps (with white channel)	E†
Black Channel (with white end caps)	C†

†Add this suffix to the appropriate catalog number.
NOTE: For continuous row mounting no end caps required between units, order by replacing "O" with "X" in seventh digit (ex. DA 2101 X8).

Application Data

ILLUMINATION CALCULATIONS For desired Illumination Level, determine Area per Luminaire by Method A or B below and make layout to obtain this area observing Lighting Design Factors at right. Total number of units required may be obtained from layout or by dividing Room Area by Area per Luminaire.

Method A (Recommended)

$$\text{Area} = \frac{(\text{Lamp Lumens per Luminaire}) \times (\text{C.U.}) \times (\text{M.F.})}{\text{Footcandles Desired}}$$

C.U.—Obtain from table below
M.F.—Good .75; Medium .70; Poor .65

ϱcc	80			50			10		
ϱw	50	30	10	50	30	10	50	30	10
RCR	COEFFICIENTS OF UTILIZATION† FOR 20% EFFECTIVE FLOOR CAVITY REFLECTANCE								
1	.69	.67	.64	.63	.62	.60	.57	.56	.55
2	.62	.58	.54	.57	.54	.51	51	.49	.47
3	.55	.50	.47	.51	.47	.44	46	.44	.42
4	.49	.44	.40	.46	.42	.39	.42	.39	.37
5	.44	.39	.35	.41	.37	.34	.38	.35	.32
6	.40	.35	.31	.37	.33	.30	.35	.31	.28
7	.36	.31	.27	.34	.29	.26	.31	.28	.25
8	.32	.27	.23	.30	.26	.23	.28	.24	.22
9	.29	.24	.20	.27	.23	.20	.25	.22	.19
10	.26	.21	.18	.25	.21	.17	.23	.19	.17

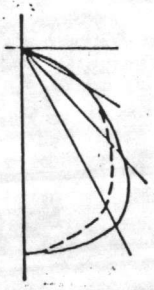

†Table shows CU's for 2 lamp Indigo 2 clear closure. Multiply by .83 for diffuse, by 1.02 for 2 lamp Indigo 2-4 clear, by .95 for tinted, by .97 for diffuse, by .97 for 4 lamp Indigo 2-4 clear, by .81 for diffuse.

ϱcc = Effective Ceiling Cavity Reflectance ϱw = Wall Reflectance
RCR = Room Cavity Ratio

$$\text{RCR} = \frac{5(\text{Height Above Work Plane}) \times (\text{Room Width} + \text{Room Length})}{(\text{Room Width}) \times (\text{Room Length})}$$

See lighting design data for method of determining Effective Cavity Reflectances and for 10% and 30% floor cavity reflectance multipliers.

LIGHTING DESIGN FACTORS

Surface or Suspension Mounting
The slim profile and Direct distribution of the Indigo make it most suitable for surface mounting at all ceiling heights. It may, however, be suspended, if desired, to clear ceiling obstructions or to satisfy a personal preference.

Continuous Rows or Individual Units
Continuous rows simplify wiring and improve appearance by minimizing apparent number of luminaires. If spacing limitations below do not permit continuous rows, groupings are preferable to individual units.

Maximum Spacing for Satisfactory Illumination Uniformity
1.4 × Mounting height above work plane for clear closures, 1.5 for tinted and 1.25 for diffuse. Spacing from wall to first unit or row should preferably be 2½', and in no case more than ½ the spacing between rows or units. Ends of rows should be 6" to 1½' from end walls.

Orientation
For most comfortable viewing and to obtain neatest, most unobtrusive appearance, align luminaires or rows parallel to predominant viewing direction (or traffic flow in store) but not across long narrow rooms.

Actual Spacing for Desired Illumination
Determine spacing between luminaire centers that fits room and approximate area determined by Illumination Calculations. Be sure maximum spacing (above) is not exceeded. (NOTE: Spacing between continuous rows will be Area per Luminaire divided by luminaire length.)

Method B (For quick, approximate calculations)
Assuming Good Maintenance and reflectances of 20, 80, and 50% for floor cavity, ceiling, and walls respectively, obtain area from table below. Where no area is given, unit is not considered applicable.

Luminaire and Lamp Description	Room Width / Mtg. Height*	Approximate Area per Luminaire (sq. ft.)** 30 ft-c	50 ft-c	70 ft-c	100 ft-c	150 ft-c
INDIGO 2	4 or more	105	60	45	30	20
2-40w, 48" RS	2	85	50	35	25	—
3150 Lumens	1	60	35	25	20	—
INDIGO 2-4	4 or more	105	60	45	30	20
2-40w, 48" RS	2	85	55	35	30	20
3150 Lumens	1	60	35	30	20	—
INDIGO 2-4	4 or more	200	120	85	60	40
4-40w, 48" RS	2	165	100	70	50	35
3150 Lumens	1	120	70	50	35	25

*Above Floor **With clear closure. Multiply by .83 for Indigo 2 diffuse. For Indigo 2-4 multiply by .93 for 2 lamp tinted, by .95 for 2 lamp diffuse, by .84 for 4 lamp diffuse.

miller LIGHTING The Miller Company • 99 Center St., Meriden, CT 06450 • (203) 235-4474 • Martin, TN

Item #6

TYPE F MILLER #DA1101-04-277V MK III ESB

SERIES DA

Indigo1

16510-1.4.1 a

NL-2 - Type "A"

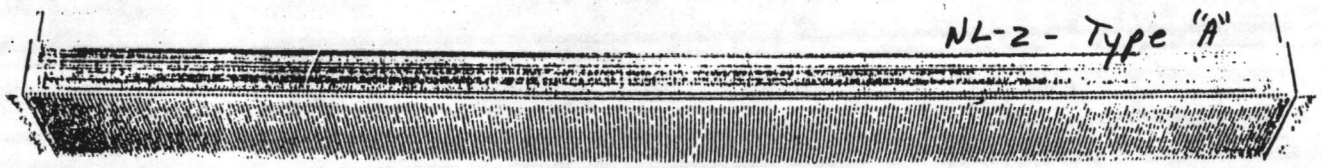

U.L. Listed and AFL-IBEW

FEATURES

- Completely shielded semi-direct luminaire
- Designed as a companion unit to the two and four lamp INDIGO fixtures
- Wide distribution pattern
- Good vertical illumination
- Ballast bolts secured to backplate to prevent turning
- Raised bumps on channel top assure level surface mounting and provide separation from ceiling for additional heat dissipation
- Large end openings facilitate feed-through wiring
- Lampholders individually removable from installed units
- Decorative end cap snaps securely to closure in precise alignment—completely covers end of unit for light-tight appearance
- U.L. listed provision for mounting to low density ceilings available on request

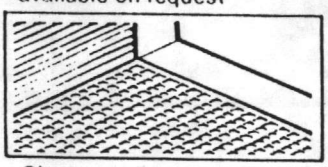

- **Closure utilizes exclusive Miller lens pattern**
  Bottom surface employs conical prismatic lens of crystal clear or diffuse plastic. Provides excellent directional control for downward component; lamp concealment is good. Linear internal prisms along sides minimize sidewall brightness and enhance lighted appearance.

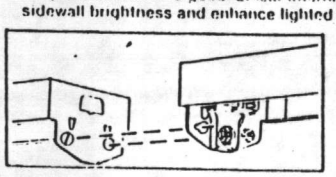

- **Built-in connector-- positive alignment**
  Abutting channels are easily and accurately connected and aligned by mating of key hole slots with captive screws on socket straps. 8 ft. channels facilitate continuous row installation.

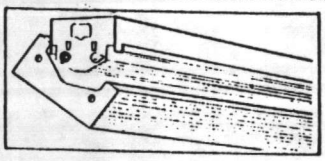

- **No-sag, self-hinging closure, full basket closure**
  Closure supported along entire length by flanges on channel cover. Can be swung open or removed from either side, regardless of how installed. Closure doesn't touch ceiling when in open position, no metal framework to obstruct washing or drying. Closed end basket for strength.

DIMENSIONS

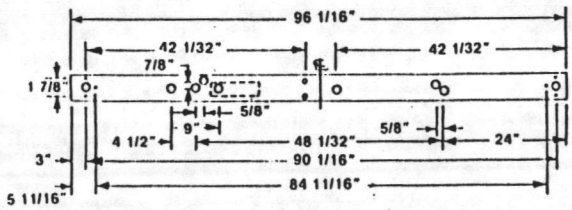

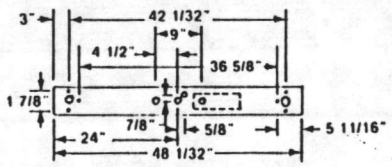

O 7/8" DIA. K.O. FOR 1/2" CONDUIT

o 5/16" DIA. K.O. FOR 1/4" MOUNTING BOLT

• 1/4" DIA. K.O.

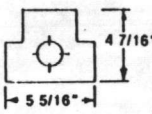

HPF Sound Rated "A"
Energy Saving Ballast

SPECIFICATIONS

Closure—Four ft. extruded refractor of clear or diffuse virgin Acrylic plastic; welded, injection molded ends. Miller exclusive lens pattern on bottom exterior; linear prisms on interior of sides. Formed with continuous lips which hook onto support flanges of channel cover.

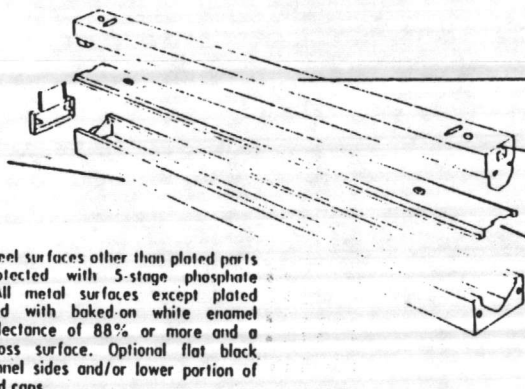

20 gauge
Channel rigidized by longitudinal bends which form sides and bottom re-entrant flanges. Knockouts on top for surface-mounting screws, stem hangers, or conduit.

20 gauge
Channel Assembly—Die-formed steel channel securely attached to socket strap-end plates. Steel endplate provides backing for snap-on lampholders. CBM, HPF series ballast(s), with thermal protection, wired with #18AF wire neatly held. Solderless connectors.

Channel Cover—Four ft. section of die-formed steel with full length, closure support flanges.

Decorative End Caps—Molded, opaque High Impact plastic; stylized design. For use at row ends or on individually mounted units. All white or with optional black trim on lower portion.

Finish—All steel surfaces other than plated parts anti-rust protected with 5-stage phosphate treatment. All metal surfaces except plated parts sprayed with baked-on white enamel having a reflectance of 88% or more and a controlled gloss surface. Optional flat black paint on channel sides and/or lower portion of decorative end caps.

miller LIGHTING

ORDERING INFORMATION

Lamp Type	Unit Length (Nom.)	Number, Watts & Length of Lamps (not included)	Total Watts (incl. aux.)	CATALOG NUMBERS For 110-125 volt, 60 cycle equipment - also available for other voltages and frequencies: With Clear Acrylic Lens	With Diffuse Acrylic Closure	Approx. Net Wt. (lbs.)
Single Lamp Indigo 1						
Rapid Start	4'	1-40w, 48"	52	DA-1101-04	DA-1106-04	12
	8'	2-40w, 48"	92	DA-1101-08	DA-1106-08	20

Note: Units, UL listed for direct mounting on low density ceilings, are available upon request. Contact factory for information and pricing.

OPTIONS

Description	Catalog Number
Black End Caps and Black Channel	B†
Black End Caps (with white channel)	E†
Black Channel (with white end caps)	C†

†Add this suffix to the appropriate catalog number.
NOTE: For continuous row mounting no end caps required between units, order by replacing 'O' with 'X' in seventh digit (ex. DA-1101-X8).

Application Data

Illumination Calculations—For desired Illumination Level, determine Area per Luminaire by Method A or B below and make layout to obtain this area observing Lighting Design Factors below. Total number of units required may be obtained from layout or by dividing Room Area by Area per Luminaire.

Method A (Recommended)

$$\text{Area} = \frac{(\text{Lamp Lumens per Luminaire}) \times (\text{C.U.}) \times (\text{M.F.})}{\text{Footcandles Desired}}$$

C.U.—Obtain from table at the right
M.F.—Good .75; Medium, .70; Poor .65

ρcc	80			50			10		
ρw	50	30	10	50	30	10	50	30	10
RCR	COEFFICIENTS OF UTILIZATION FOR 20% EFFECTIVE FLOOR CAVITY REFLECTANCE								
1	.77	.74	.71	.67	.65	.63	.56	.55	.53
2	.68	.63	.59	.59	.56	.53	.50	.48	.46
3	.60	.55	.50	.53	.49	.46	.45	.42	.40
4	.54	.48	.43	.48	.43	.39	.40	.37	.34
5	.48	.41	.37	.43	.38	.34	.36	.33	.30
6	.43	.37	.32	.38	.33	.30	.34	.29	.27
7	.39	.32	.28	.35	.29	.26	.30	.26	.23
8	.35	.28	.24	.31	.26	.22	.27	.23	.20
9	.31	.25	.21	.28	.23	.19	.24	.20	.17
10	.28	.22	.18	.25	.20	.17	.22	.18	.15

†Table shows C.U.'s for clear closure, for diffuse multiply by .88.

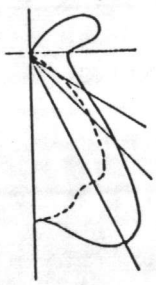

ρcc = Effective Ceiling Cavity reflectance ρw = wall reflectance RCR = Room Cavity Ratio

$$\text{RCR} = \frac{5\ (\text{Height Above Work Plane}) \times (\text{Room Width} + \text{Room Length})}{(\text{Room Width}) \times (\text{Room Length})}$$

See lighting design data for method of determining Effective Cavity Reflectances and for 10% and 30% floor cavity reflectance multipliers.

LIGHTING DESIGN FACTORS

Surface or Suspension Mounting
Although surface mounting is generally preferable at all ceiling heights, Indigo 1 may be suspended, if desired, to clear ceiling obstructions or to satisfy a personal preference.

Continuous Rows or Individual Units
In most areas, continuous rows will be required to maintain, level of illumination. Continuous rows simplify wiring and improve appearance by minimizing apparent number of luminaires. If spacing limitations below do not permit continuous rows, groupings are preferable to individual units.

Maximum Spacing for Satisfactory Illumination Uniformity
1.6 × Mounting Height above work plane with clear closure, 1.4 with diffuse.

Orientation
For most comfortable viewing and to obtain neatest, most unobtrusive appearance align units or rows parallel to corridors. Where two or more rows are used, outermost rows should be mounted close to walls to give feeling of increased width of corridor. (Exception: In corridors with lockers along walls, mount units so as to illuminate inside of lockers.)

Actual Spacing for Desired Illumination
Determine spacing between luminaire centers that fits room and approximate area determined by Illumination Calculations. Be sure maximum spacing (above) is not exceeded. (NOTE: Spacing between continuous rows will be Area per Luminaire divided by luminaire length.)

Method B (For quick, approximate calculations)—Assuming Good Maintenance and reflectances of 20, 80, and 50% for floor cavity, ceiling, and walls respectively, obtain area from table below.

Luminaire and Lamp Description	Room Width / Mtg. Height*	Approximate area per Luminaire (sq. ft.)** 10 ft-c	15 ft-c	20 ft-c	30 ft-c
INDIGO 1	2	140	95	70	45
1-40w, 48" RS	1	100	65	50	35
3150 Lumens	0.5	80	55	40	25

*Above floor **With clear closure, multiply by .83 for diffuse

Average Luminance (Footlamberts)††

Angle from Vertical	Crosswise	Lengthwise
45°	785	900
55°	495	680
65°	300	510
75°	220	400
85°	200	455

‡Based on 3150 lumen lamp and use of clear closure.

miller LIGHTING
The Miller Company • 99 Center St., Meriden, Ct. 06450 • (203) 235-4474 Martin, TN

Form No. DA58001-7

TYPE J MILLER LSLP40-Less Lamp-277V Item 748
TYPE L MILLER LSLP40-S-Less lamp-277V

SERIES L

Super Watt

16510 - 1.4.1 a
16510 - 2.5

FEATURES

- Efficiency over 91%
- Spacing-to-mounting height ratio 2.5:1
- Uplight is 25% - reducing contrast and providing good component of indirect lighting
- Shallowest fixture of its type
- Compact overall design without sacrifice of thermal control, brightness control, or efficiency
- Latches for simple refractor removal
- Pendent or surface mount units
- Units shipped with lamps installed - One convenient carton—no need to remove refractor to install
- Each surface unit is prewired for thru-wire connections on both sides. Thru-wiring saves on conduit, outlet boxes, nipples, hangers, etc.
- Surface mount is automatically suited for wet locations
- Great for vertical footcandles

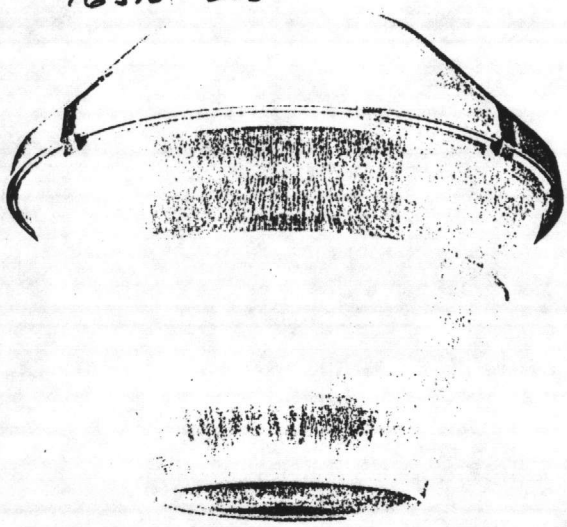

U.L. listed "suitable for damp locations" and AFL-IBEW. Surface Mount version is U.L. listed "suitable for wet locations" (optional for pendent mount version).

Lamps and Wattages:
150-200-250-310-400 Watt HPS
175-250-400 Watt Metal Halide
250-400 Watt Mercury

SPECIFICATIONS

Housing	Aluminum with gray baked-on synthetic enamel finish.	
Reflector	Formed steel with white baked-on synthetic enamel finish with a minimum of 88% reflectance.	
Lampholder	Mogul base porcelain, with lamp grips and spring-loaded center contact.	
Internal parts	Aluminum or zinc plated steel.	
Gasket(s)	Closed cell epichlorohydrin.	
Labels	U.L. listed "suitable for damp locations" and AFL-IBEW. Surface Mount version is U.L. listed "suitable for wet locations" (optional for pendent mount version).	
Temperature Rating†		
	PENDENT	SURFACE
Standard 40°C Max. Ambient 65°C Max. Ambient*	Thru 400 watt lamps —	Thru 250 watt lamps Thru 150 watt HPS
Lamps & Wiring	Shall be factory lamped (150-200-250-310-400 Watt HPS; 175-250-400 Watt Metal Halide; or 250-400 Watt Mercury)	
Refractor	Shall be 100% acrylic ([redacted]) injection molded with prisms designed to provide a wide distribution resulting in a 2.5:1 spacing-to-mounting height ratio (calculated by IES method) but restricting candlepowers at high angles to prevent glare. Total uplight component shall exceed 20%.	
Refractor Attachment	4 Latches in the refractor rim. One latch is also a hinge. (Screws optional.)	
Breather	Shall prohibit entry of particles exceeding 20 microns (optional).	
Installation	It shall not be necessary to remove the refractor for installation. The pendent mount unit shall be equipped with a cast aluminum ¼ turn mounting hub assembly (with ¾" internal pipe threads), which may move laterally as necessary for fixture balancing.	

†55°C ambient available in some models. Contact factory for availability. *Contact factory for availability.

DIMENSIONS

Standard Units

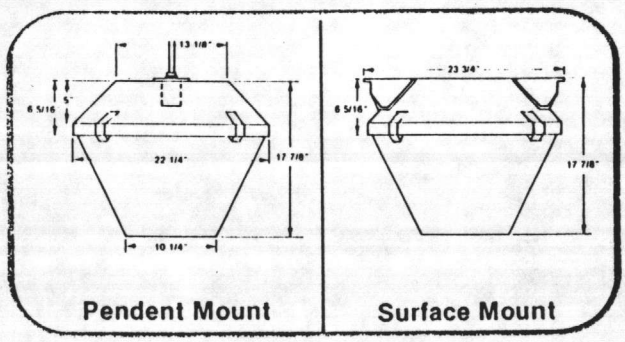

ORDERING INFORMATION

Standard Units

16510 - 2.11

Description			Pendent Mounting*		Surface Mounting**	
Lamp Type	**Lamp Wattage**	**Voltage (specify one)**	**Catalog Number**	**Net Wt. (approx. lbs.)**	**Catalog Number**	**Net Wt. (approx. lbs.)**
High-pressure sodium	400	120 208 240 277 480	LSLP40	39		
High-pressure sodium	310		LSLP31†	33	LSLT31†	35
High-pressure sodium	250		LSLP25	34	LSLT25	36
High-pressure sodium	200		LSLP20†	29	LSLT20†	31
High-pressure sodium	150		LSLP15	29	LSLT15	31
Metal Halide	400		LHLP40	34		
Metal Halide	250		LHLP25	30	LHLT25	32
Metal Halide	175		LHLP17†	28	LHLT17†	30
Mercury	400		LMLP40	31		
Mercury	250		LMLP25†	28	LMLT25†	30

NOTE: To order optional version with screws (not latches) replace third letter of appropriate catalog number with "S".
*Supplied with mounting hub, cover plate, and lock nut
**Unique thru-wire mounting has standard 2 wire, thru-feed capability (3 wire and 4 wire optional). Each unit is prewired for thru-wire connections on both sides, and leads are easily accessible from both sides of unit.
†Contact factory for availability
All ballasts high power factor

ACCESSORIES

Accessories	Catalog Number
Porta-Hook Kit	SY-7-Voltage
Cord & Plug	SY-6-Voltage
Hook	HX-80133
Loop	HX-80129
Single Fuse (120V & 277V factory installed)	F*
Double Fuse (208V, 240V & 480V factory installed)	F*
Quartz Standby Light (150W includes lamp)	S*
Tamper Proof (includes screws not latches)	V*
Polycarbonate Refractor (factory installed option)	P*
Wet Location Version Pendent Mount Unit	W**

*Add this suffix to appropriate catalog number for standard unit ordered
**Replace third letter of appropriate catalog number for standard unit ordered with "W" for Wet Location Version

TYPE M MILLER #IL-2101-04-277V MK III ESB

Item #9
16510-1.4.1a

Imperial

NL-6-Type "A"

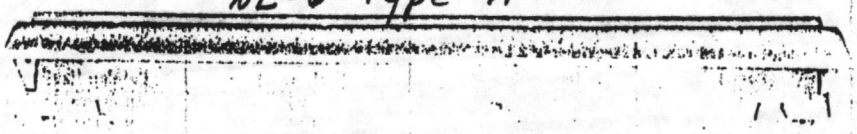

IL-2101-04 H.P.F. SOUND RATED "A" ENERGY SAVING BALLAST
U.L. Listed and AFL-IBEW

FEATURES

- Provides 20-30% uplight with 30° shielding for all T-12 lamps and 25° for Power-Groove
- Porcelain parabolic reflectors—appearance of all reflecting surfaces is uniform
- Suitable for industrial areas requiring high quality, medium to high level illumination and gymnasiums when equipped with full end plate and accessory wire guard or louver

SPECIFICATIONS

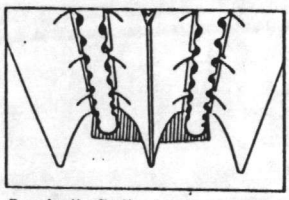

Parabolic Reflectors—Imperial has one-piece 4-foot reflector formed with separate parabolic compartment for each lamp. Appearance of all reflecting surfaces is uniform.

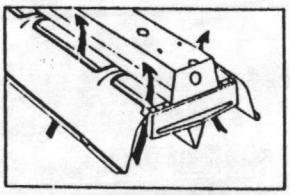

Embossed Apertures—Add rigidity and are superior to extruded apertures for facilitating cleaning and assuring a better finish around aperture edges.

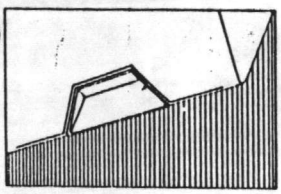

Latching—Captive wing nuts are near each end of reflector. One man can attach or release reflectors from one ladder position without tools.

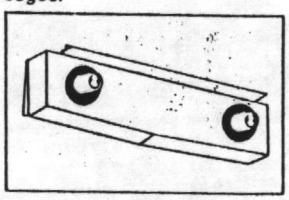

Socket Box—Sturdy, one-piece steel box permits easy replacement of sockets in installed units without handling loose hardware. Sockets are snap-in, spring-loaded turret-type. Push-in wiring connections.

16510-2.1.3

DIMENSIONS

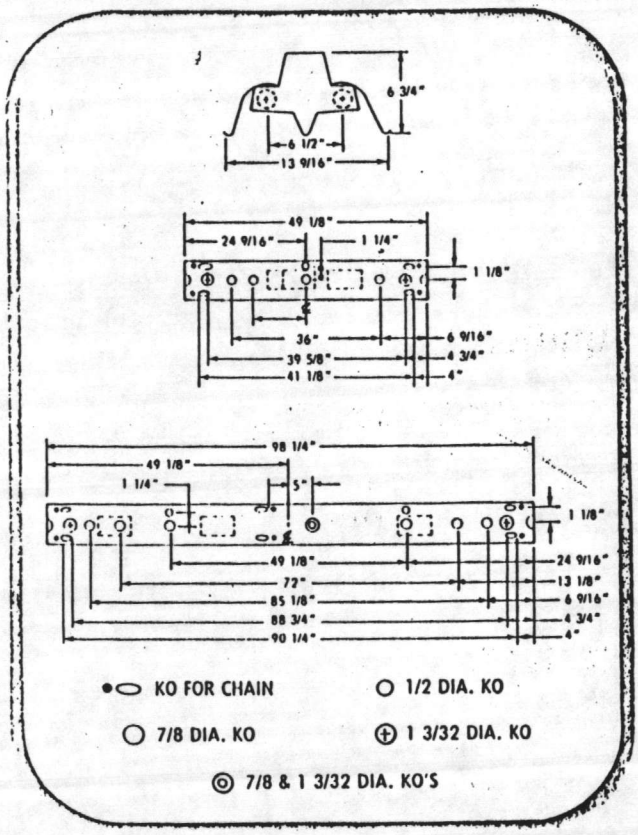

Channel Assembly—Formed steel channel, socket boxes and reflector hangers, factory assembled. Completely wired CBM, HPF thermally protected ballasts.

Channel is rigidized by continuous beads on sides at top and bottom. Top bead permits mounting accessory clamp hangers anywhere along channel length (including joints between units).

End Plates—Partial end plates of formed steel are provided with basic units and for row end units. Note: Full end plates also available; must be ordered separately.

Channel Connector—Formed steel, pressure type connector ensures rigid mechanical connection and alignment of abutting channels. Also provides continuity of electrical ground. Fits inner grooves of top channel beads and is secured from below by tightening captive screws.

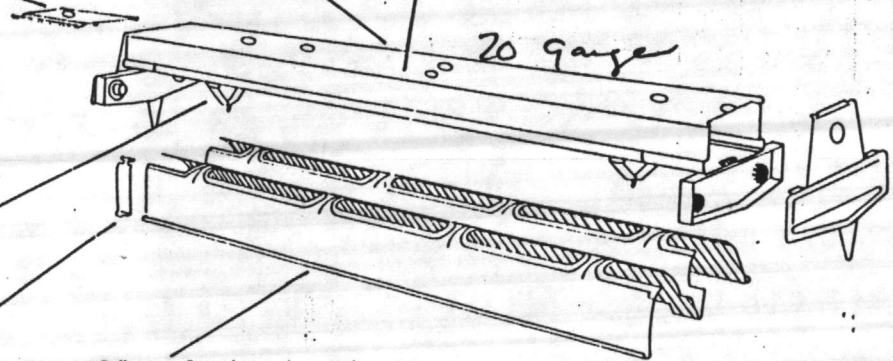

Reflector Hangers—Two steel straps with permanently installed bolt for engaging reflector wing nuts.

Reflector Aligners—Spring steel straps provide mechanical means for aligning abutting reflectors and closing gaps. Match outside reflector contour and are easily attached or removed without tools.

Reflectors—Formed, one-piece steel construction approximately 4' in length. Reflectors are rigidized by vertically die-formed ribs between apertures, embossing around apertures, and up-turned open bead along outside edges. Large, captive wing nuts near each end.

FINISH Reflectors: White porcelain enameled with 85% minimum reflectance. Reflector hanger, connectors and hardware zinc plated. All other steel surfaces treated with 5-stage phosphatizing process and finished white baked enamel.

Lamp Type	Unit Length (Nom.)	Number, Watts, and Length of Lamps (not included)	Total Watts (incl. aux.)	Catalog Number*	Approx. Net Wt. (lbs.)
Rapid Start	4'	2-40w, 48"	92	IL-2101-04	24
	8'	4-40w, 48"	184	IL-2101-08	48
Slimline	8'	2-75w, 96"	171	IL-2201-08	45½
800 ma High Output	4'	2-60w, 48"	145	IL-2301-04	30¾
	8'	2-110w, 96"	241	IL-2301-08	51¼
Power Groove VHO, SHO	4'	2-110w, 48"	235	IL-2501-04	33¾
	8'	2-215w, 96"	455	IL-2501-08	55½

NOTE: 800 ma and 1500 ma units must be suspended at least 6" to prevent ballast overheating

*For 110-125 Volt, 60 Hertz Equipment available for other voltages and frequencies on request.

For continuous row mounting, order by replacing "O" with "X" in the seventh digit (Ex. IL-2101-X8). Units shipped with connector and two aligners.

Accessories	Catalog Number
Chain Hanging Set	IX-19903
Cord & Plug Set—120V	IX-74416
—277V	IX-77416
Full End Plate	IX-101468
Louver Door—4'	IL-19967
Sliding Clamp Hangers—	
For ceiling, 1/2" rod, or 1/4" pipe mounting	IX-19523
For ceiling, outlet box, or 1/2" conduit mounting (shallow 3/4" overall ht.)	CX-19590
Wire Guard—4'	IX-99080

Application Data

ILLUMINATION CALCULATIONS For desired Illumination Level, determine Area per Luminaire by Method A or B below and make layout to obtain this area. Total number of units required may be obtained from layout or by dividing Room Area by Area per Luminaire.

Method A (Recommended)

$$\text{Area} = \frac{(\text{Lamp Lumens per Luminaire}) \times (\text{C.U.}) \times (\text{M.F.})}{\text{Maintained Footcandles Desired}}$$

C.U.—Obtain from appropriate table at right using multipliers as required

M.F.—Maintenance Factor — Good .80 .60, Medium .70 .55, Poor .60 .50 — RS, SL, HO Lamps / 1500 ma Lamps

In CU Tables at right:

ϱcc = Effective Ceiling Cavity reflectance

ϱw = Wall reflectance

RCR = Room Cavity Ratio

$$\text{RCR} = \frac{5(\text{Height Above Work Plane}) \times (\text{Room Width} + \text{Room Length})}{(\text{Room Width}) \times (\text{Room Length})}$$

See Lighting Design data for method of determining Effective Cavity Reflectances and for multipliers for 10% and 30% floor cavity reflectances.

Method B (For quick, approximate calculations)
Assuming Good Maintenance and Reflectances of 20%, 70%, and 50% for floor cavity, ceiling, and walls respectively, obtain AREA from table below.

Luminaire	Lamps	Room Width / Mtg. Height†	Approximate Area per Luminaire (sq. ft.) 30 ft-c	50 ft-c	70 ft-c	100 ft-c	150 ft-c	200 ft-c
IMPERIAL	2-40w, 48"‡ Rapid Start 3150 Lumens	4 or more	130	80	55	40	25	20
		2	110	65	45	35	20	15
		1	75	45	30	20	15	—
	2-96" 800 ma 9200 Lumens	4 or more	385	230	165	115	75	55
		2	320	190	135	95	65	50
		1	215	130	95	65	45	30
	2-96" 1500 ma P-G 16,000 Lumens	4 or more	515	310	220	155	105	75
		2	425	255	180	125	85	65
		1	290	175	125	85	60	45

†Above Floor

‡Areas may be doubled for 96" Slimline

ϱcc	80			50			10		
ϱw	50	30	10	50	30	10	50	30	10
RCR	COEFFICIENTS OF UTILIZATION FOR 20% EFFECTIVE FLOOR CAVITY REFLECTANCE								
1	.90	.87	.84	.79	.76	.74	.66	.64	.63
2	.80	.74	.70	.70	.66	.63	.59	.56	.54
3	.71	.64	.59	.62	.58	.54	.53	.50	.47
4	.63	.56	.51	.56	.50	.46	.47	.44	.41
5	.56	.48	.43	.50	.44	.40	.42	.38	.35
6	.50	.43	.37	.45	.39	.34	.38	.34	.31
7	.45	.39	.32	.40	.34	.30	.34	.30	.27
8	.40	.33	.28	.36	.30	.26	.31	.26	.23
9	.36	.30	.24	.32	.26	.22	.28	.23	.20
10	.33	.26	.21	.29	.24	.20	.25	.21	.18

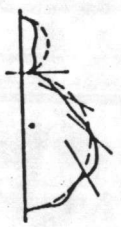

Unit	CU Multiplier T-12 Lamps	CU Multiplier PG-17 Lamps	Max. Spacing ÷ Mtg. Ht. Above Work Plane T-12 Lamps Cross	T-12 Lamps Length	PG-17 Lamps Cross	PG-17 Lamps Length
IMPERIAL	1.00	0.98	1.30	1.30	1.35	1.30

miller LIGHTING

The Miller Company • 99 Center St., Meriden, CT 06450 • (203) 235-4474 • Martin, TN

JOB NAME:

FIXTURE TYPE: Item #10 16510-1.4.1a

4400 Series

Fluorescent — Ceiling Mount
HPF — High Power Factor

kenall

INDESTRUCTIBLE

SPECIFICATION SHEET NO. 162

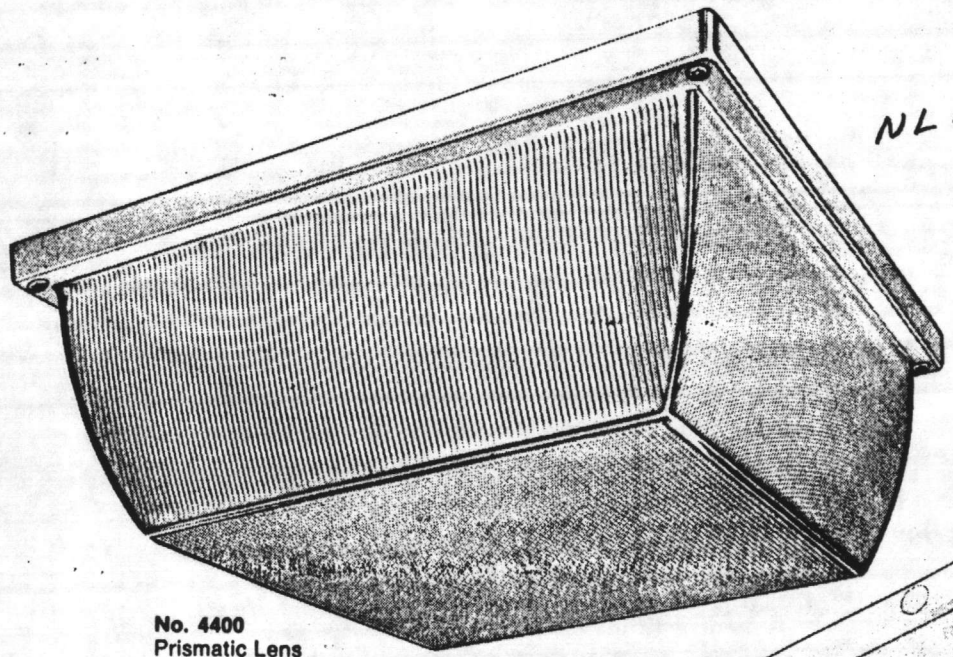

NL46-Type "C"

No. 4400
Prismatic Lens

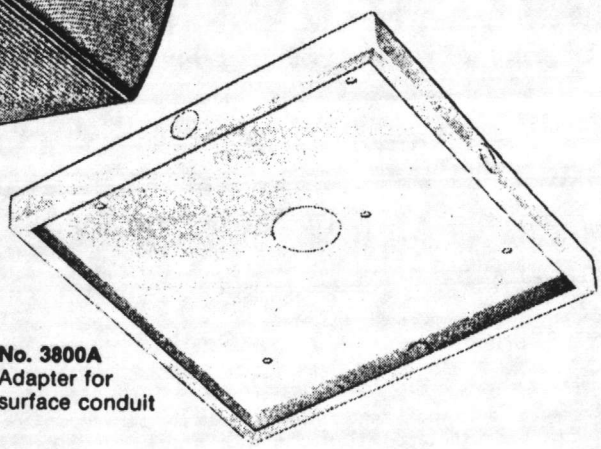

No. 3800A
Adapter for surface conduit

The 4400 series combines a vandalproof fixture with energy efficient components to achieve the ideal fixture for retrofitting problem areas such as schools, hospitals, parks, public housing, military bases and prisons. The polycarbonate lens is strong enough to withstand the blow from a rock or bat and even stops a .22 caliber bullet. For added protection, the Kenall four point mounting system guards the lamps from shock or breakage if the fixture is hit.

Model 4400 (two 22W circlines) provides the same light output as two 75 watt incandescents. Model 4450 (one 22W circline) provides the same amount of light as a 75 watt incandescent. Both fixtures save up to 60% in energy expenses.

Specifications

- **Diffuser** — Indestructible, injection-molded polycarbonate lens is clear prismatic and UV stabilized. Min. thickness .125". Wrap-around design, no exposed metal. Smooth outside surface is easy to clean.
- **Baseplate** — Rugged 16 gauge steel, white baked enamel finish is corrosion resistant.
- **Ballast** — High Power Factor — 50° — 120V self start ballast. Cooler operating for prolonged life.
  - Model 4400 — Two (2) ballasts to operate two lamps.
  - Model 4450 — One (1) ballast to operate one lamp.
- **Lamps** — 22 watt circline lamps (not furnished).
  - Model 4400 — Uses two FC8T9 circlines.
  - Model 4450 — Uses one FC8T9 circline.
- **Hardware** — Four (4) stainless steel, MAXIMUM SECURITY POSIGRIP screws require No. 9500 screwdriver.

Accessories

- **Adapter for surface conduit (3800A)** — 16 gauge steel. White baked enamel finish. Four (4) KOs provided for ½" conduit. 2" opening for wiring access. Four (4) ¼" mounting holes. Mounting hardware furnished (see illus.).
- See ordering information for additional options and accessories.

Mounting

We recommend using all four (4) ¼" KOs provided in the baseplate for mounting with:

- Four (4) ¼-20 machine screws with masonry anchors in brick or concrete.
- Four (4) ¼" lag screws or toggle bolts in frame construction.

kenall MANUFACTURING COMPANY 4140 W. Victoria Street, Chicago, IL 60646 • (312) 463-8500

Specifications subject to change without notice

Ordering Information

Type K

Cat. No.	Description
4400	44 watt - 120v - circline (two FC8T9 lamps) - HPF - 50° - prismatic - uses four MAXIMUM SECURITY POSIGRIP screws
4450	22 watt - 120v - circline (one FC8T9 lamp) - HPF 50° - prismatic - uses four MAXIMUM SECURITY POSIGRIP screws
OPTIONS - ADD TO CATALOG NUMBER	
-CW	Cold weather transformer - self-start - NPF - furnished with wet location gasket
-DC	Two DC bayonet base sockets for two T-7 15W lamps (see 9124) - lamps not furnished
-GK	Gasketed to resist moisture and bugs
-NL	One DC bayonet base socket for one T-7 15W lamp (see 9124) - lamp not furnished
ACCESSORIES & PARTS	
3800A	Adapter for surface conduit
9090	Diffuser for 4400/4450
9124	T-7 15W lamp for use with night light (-NL) or DC sockets
9500	MAXIMUM SECURITY POSIGRIP screwdriver
9518	MAXIMUM SECURITY POSIGRIP screw

MAXIMUM SECURITY POSIGRIP SCREW (Standard)

- Deters tampering where conventional tamperproof screws fail.
- Special screwdriver (No. 9500) engages screw for ease of fastening.

KENALL GUARANTEE

This fixture is virtually indestructible. It is guaranteed to withstand vandalism better than any lighting fixture on the market. Kenall will replace any fixtures vandalized within one year if installed according to our instructions.

Dimensions

4400
2 Lamp Circline
(lamps not furnished)

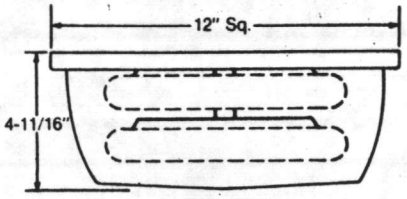

Side View

4450
1 Lamp Circline
(lamp not furnished)

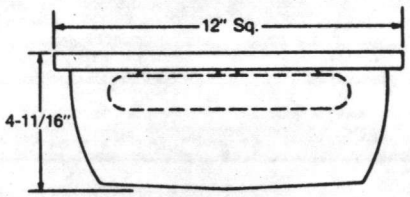

Side View

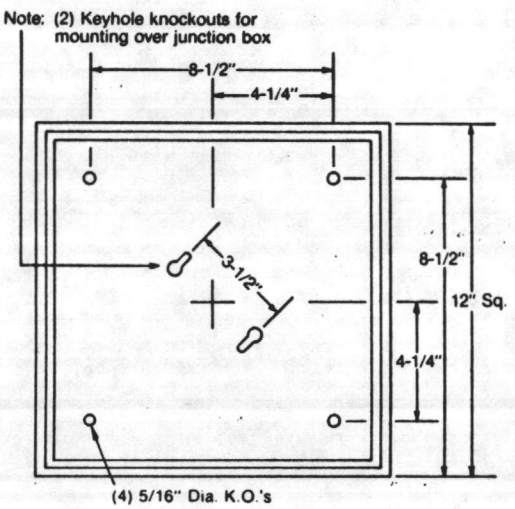

Back View

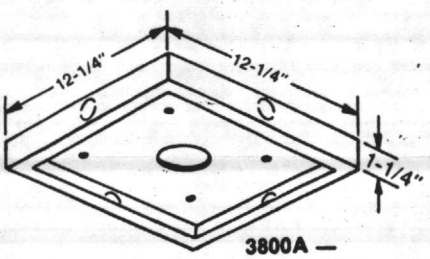

3800A —
Adapter for surface conduit

kenall MANUFACTURING COMPANY 4140 W. Victoria Street, Chicago, IL 60646 • (312) 463-8500

JOB NAME:

FIXTURE TYPE: H

Item #11
16510-1.4.1a

7100 Series

1 Lamp, Fluorescent

kenall

NL-14

SPECIFICATION SHEET NO. 157A

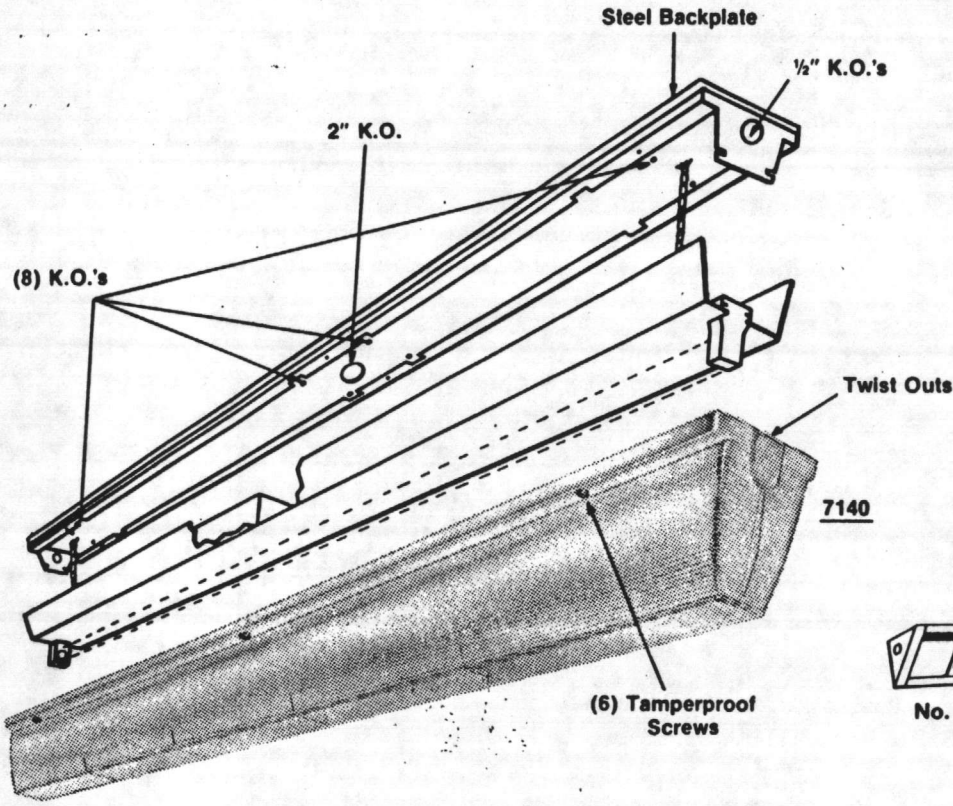

277 volts

7140 is furnished with 2 gaskets and two locknuts to be used with twist outs for surface conduit.

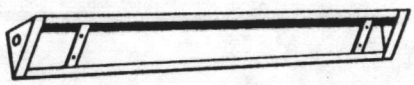

No. 681 Corner Mounting Adapter

The 7100 Series is the economical solution for lighting areas where fixture breakage is a problem. The single lamp fluorescent adequately illuminates an area while saving energy and reducing electric bills. No adapter is needed for conduit mounting. The injection molded polycarbonate fixture is guaranteed unbreakable. Functional applications of the fixtures are: schools, railway passenger terminals, stadiums, prisons, hospitals, etc.

Features

- Wraparound design encloses all metal parts.
- Special design and patented "twist outs" with gasket package permit ½" conduit access (⅞" KO) on each end without need of a special adapter.

General Specifications

- **Backplate** — 16 gauge one piece steel backplate with white baked enamel finish. 2" KO for access wiring. Provisions for stud mounting with (8) ¼ x 20 screws.
- **Wireway** — 18 gauge steel, baked enamel finish. Chain wireway holder and exclusive patented method for securing wireway to baseplate without screws to permit quicker installation.
- **Diffuser** — Injection-molded polycarbonate, unbreakable prismatic and UV stabilized. Typical section thickness .125".
- **Gasket** — Seal tight design uses high quality closed cell neoprene rubber. Listed by U.L. for damp or wet locations.
- **Standard Ballast** — Single lamp ~~40~~ 35 watt rapid start ballast is 120V-50°-CBM-ETL-HPF class "P".
- **Lamps** — Fixture uses one ~~F40~~ F35 T12/RS lamp (not furnished).
- **Hardware** — Six recessed stainless steel tamperproof screws. Two are captive for quick relamping.

Model 7170

- Low heat low energy ballast for optimum energy efficiency. Ballast (when used with low energy lamps) will save up to 25% energy with full light output.

Options

- Self contained battery operated emergency system operates 1 lamp for a full 90 minutes when power is disrupted. Includes rechargeable ni-cad batteries, inverter charger, test switch and charging indicator lamp.

Accessories

- **Adapter** for corner mounting — 18 gauge steel, white baked enamel finish, 6 mounting holes for ¼ x 20 bolts, (2) ⅞" KO's for ½" conduit. Minimum order 50 pieces.

Mounting

Eight ¼" KO's are provided on the backplate. We recommend the use of six to mount fixture.

- Six ¼ x 20 machine screws with masonry anchors to mount in concrete.
- Six ¼" lag screws or toggle bolts for mounting in frame construction.

kenall MANUFACTURING COMPANY 4140 W. Victoria Street, Chicago, IL 60646 • (312) 463-8500

Specifications subject to change without notice.

JOB NAME:

FIXTURE TYPE: H

7100 Series

1 Lamp, Fluorescent

kenall

SPECIFICATION SHEET NO. 157B

Ordering Information

Cat. No.	Description
7140	Standard fixture with 120V 50° ballast
7170	Standard fixture with 277V. 50° energy saving ballast
OPTIONS - ADD TO CATALOG NUMBER	
-0°	0° cold weather ballast for 7140 only
-277	277 volt ballast
-DW	Wood grain face
-EL	Emergency lighting pack
-FNL	Fluorescent night light for one F8T5 - lamp not furnished
-FS	In line ballast fuse (HLR/GLR)
-INL	Incandescent night light for one T-7 15W - lamp not furnished (see 9124)
-MSP	Fixture with six MAXIMUM SECURITY POSIGRIP screws
-PC	Pull chain switch w/cord
-PS	Maximum security push switch
ACCESSORIES & PARTS	
681	Corner mounting Adapter (consult factory for availability and minimums)
9000	TAMPERPROOF screwdriver
9124	T-7 15W lamp for -INL
9500	MAXIMUM SECURITY POSIGRIP screwdriver

Dimensions

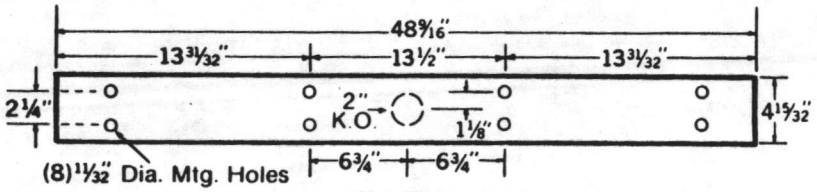

Top View
Back Plate

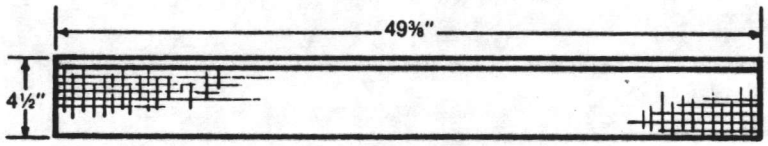

Side View

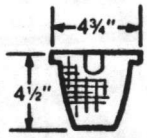

End View

Note: *Requests for specific manufacturer's electric components, i.e. Advance, GE, Universal etc., will be subject to minimums, special charges and/or long lead times.*

Photometric Data

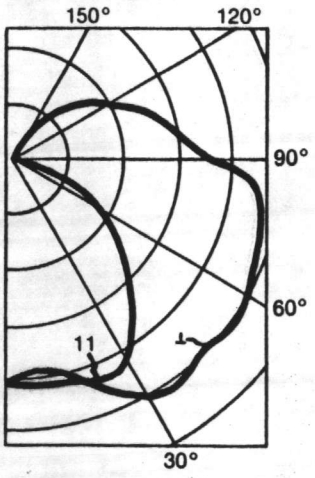

Coefficients of Utilization — Zonal Cavity Method
Effective Floor Cavity Reflectance 0.20

RC	80				70				50			30			10			0
RW	70	50	30	10	70	50	30	10	50	30	10	50	30	10	50	30	10	0
1	70	65	61	58	66	62	58	55	56	53	50	50	48	46	45	43	42	39
2	62	55	49	44	58	52	47	42	47	43	39	42	39	36	38	35	32	30
3	56	47	41	36	53	45	39	34	41	36	31	36	32	29	33	29	26	24
4	51	41	34	29	48	39	33	28	35	30	26	32	27	24	28	25	22	20
5	46	36	29	24	43	34	28	23	31	25	21	28	23	20	25	21	18	16
6	42	32	25	20	40	30	24	19	27	22	18	25	20	16	22	18	15	13
7	39	28	22	17	36	27	21	17	24	19	15	22	17	14	20	16	13	11
8	35	25	19	15	33	24	18	14	22	17	13	20	15	12	18	14	11	9
9	33	23	17	12	31	32	16	12	20	15	11	18	13	10	16	12	9	8
10	30	21	15	11	29	20	14	10	18	13	10	16	12	9	14	11	8	7

ZONAL SUMMARY					AVG FL		1MAX FL		FL RATIO	
ZONE	LUMENS	LAMP	FIXT	DEG	PARL	NORM	PARL	NORM	PARL	NORM
0- 30	250	7.8	11.2	0	682	682	1194	1194	1.8	1.8
0- 40	453	14.2	20.2	45	747	663	1160	1433	1.6	2.2
0- 60	950	29.7	42.4	55	704	659	1092	1637	1.6	2.5
0- 90	1725	53.9	76.9	65	651	660	955	1740	1.5	2.6
90-180	518	16.2	23.1	75	573	655	716	1842	1.2	2.8
0-180	2243	70.1	100.0	85	479	673	479	1842	1.0	2.7

S/MH=1.9 IES CLASS WIDE SPREAD
CIE TYPE SEMI-DIRECT

KENALL GUARANTEE

This fixture is virtually indestructible. It is guaranteed to withstand vandalism better than any lighting fixture on the market. Kenall will replace any fixtures vandalized within one year if installed according to our instructions.

October 1980

kenall MANUFACTURING COMPANY 4140 W. Victoria Street, Chicago, IL 60646 • (312) 463-8500

CHLORIDE

... Life Safety Products & Systems

1651O - 1.4.1a

1651O - 2.9

REFERENCE Series

Fluorescent exit signs for Self-powered emergency operation

- ☐ 55% Less Energy Consumption.
- ☐ Slender, Contemporary Die-cast Construction. BLACK
- ☐ Universal, for Ceiling, End or Surface Mounting. CANOPY
- ☐ Low Voltage Disconnect, Protects Batteries From Deep Discharge Damage.
- ☐ Brownout Protection.
- ☐ Pure Lead or Nickel Cadmium Batteries for Emergency Power.
- ☐ Black or Dark Bronze.
- ☐ Two Year Lamp Life.

The Reference Series is a premium die-cast exit sign. It combines distinct contemporary styling and mounting flexibility with the excellent visual communication, economy and long life of a fluorescent light source.

Two face styles are available. One is an open face in a wide selection of standard and international symbols; the other is a deep brushed aluminum stencil with knockout arrows and a color intensity lens that provides rich, true color in red or green. Both have 6" high letters with 3/4" stroke and optically balanced arrows.

UNIVERSAL MOUNTING

Installation is readily accomplished with the Reference Series' unique mounting system. The canopy, frame and accessories are modular components that assemble in any configuration. Final canopy-to-frame assembly is simple, fast and can be easily accomplished at the job site. If preferred, final canopy-to-frame assembly is available from the factory for ceiling or end mounting.

Mounting changes can be made easily. Simply remove and reposition the canopy in the correct mounting arrangement using knockouts provided. Conceal the remaining knockout opening with the snap-in cap available from Chloride.

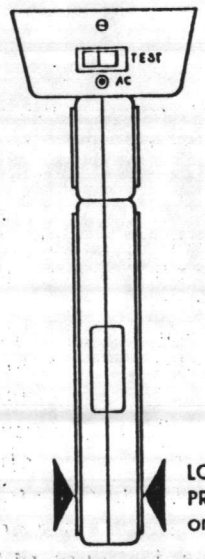

LOW PROFILE: only 1¾" thin

REFERENCE Series

POWER CANOPY

All the "self-powered" circuitry and components are neatly engineered into the universal mounting canopy. Operation is automatic and instantaneous. Upon loss of AC current, the power pack will deliver 90 minutes of emergency illumination.

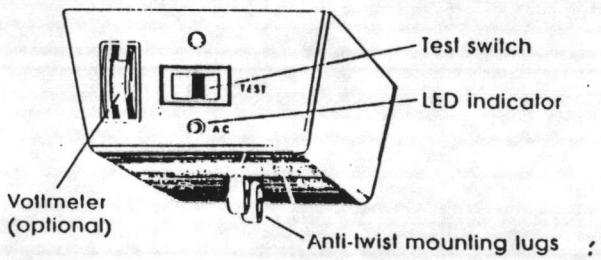

Standard features included: 120/277 volt DUAL VOLTAGE TRANSFORMER, LOW VOLTAGE DISCONNECT (L.V.D.) circuit to protect the batteries from deep discharge damage, BROWNOUT PROTECTION, LED INDICATOR LIGHT, and rocker type TEST SWITCH to simulate a power failure.

CHOICE OF BATTERIES

NICKEL CADMIUM. Sealed, maintenance-free, nickel cadmium batteries give superior performance throughout their life expectancy of more than ten years. High temperature, sintered plate construction, with polypropylene separators, provides trouble-free operation in ambient temperatures up to 131°F (55°C).

PURE LEAD. Sealed, maintenance-free batteries with pure lead plate construction provide excellent resistance to temperature extremes and are completely reliable throughout their life expectancy of five to eight years.

CHARGER

Recharging the batteries to rated capacity is accomplished as per U.L. Standard 924 requirements.

Nickel cadmium batteries utilize a constant current, solid state charging circuit.

Pure lead batteries utilize a two rate, solid state constant voltage charging circuit. Upon restoration of AC power, the charger will automatically deliver a high charge rate.

Charger provides a continuous trickle charge to maintain batteries at full capacity.

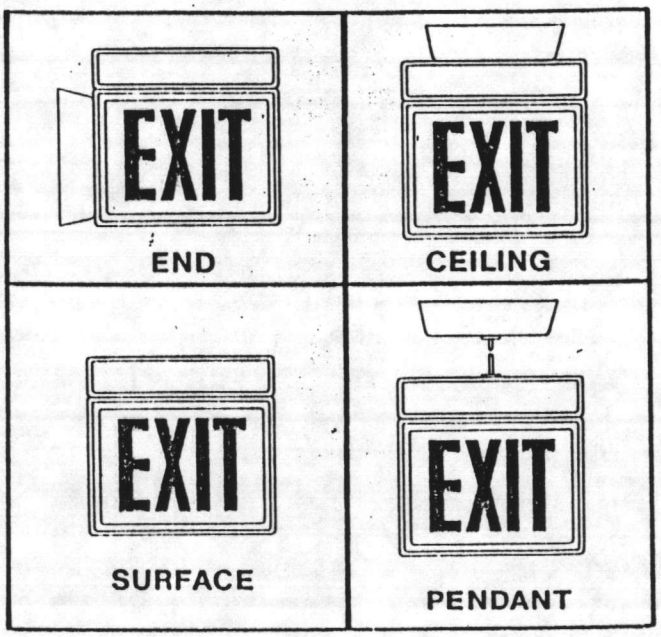

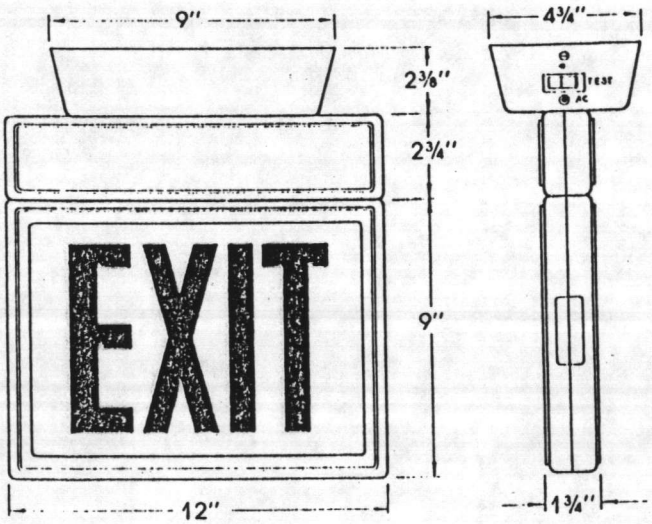

LIMITED WARRANTY

The Reference Series, except for batteries and lamps, is guaranteed for a period of one (1) year, from date of purchase, against defects in workmanship. Batteries are guaranteed, subject to proper installation and maintenance in accordance with recommended practice, as follows: nickel cadmium are fully guaranteed for two (2) years with an additional seven (7) years pro-rata. Pure lead are fully guaranteed for two (2) years with an additional five (5) years pro-rata. For complete warranty information, see Chloride data sheet, "CLW." This warranty will be null and void unless the unit(s) are installed within 180 days from date of purchase from Chloride, Inc.

ADVANTAGES OF FLUORESCENT EXITS

- **MORE ILLUMINATION**
  The Reference Series fluorescents deliver 300% more illumination. Incandescent EXITS commonly use two 20 watt lamps with a total output of 184 lumens. The Reference Series fluorescents use two six watt lamps with a total output of 590 lumens . . . over three times the illumination. In stencil or open face designs, fluorescents provide even illumination over the entire face plate and generous amounts of downlight.

- **LESS MAINTENANCE**
  The Reference Series fluorescents reduce maintenance costs. Typically, incandescent EXITS average one relamping per year. The Reference Series lamps have an expected life of 18,000 hours, so relamping occurs about every two years. In addition, the lamps are independently wired. One lamp's failure does not interfere with the other lamp's operation.

- **ENERGY SAVINGS**
  The Reference Series fluorescent uses 55% less energy than standard incandescent EXITS. Compare.

ANNUAL ENERGY CONSUMPTION/COST COMPARISON

	Annual Demand
Incandescent System (Two 20W Lamps, Charger)	395 Kwh
Fluorescent System (Two 6W Lamps, Ballast, Charger)	175 Kwh
	220 Kwh

	Annual Cost @ 10¢ per Kwh
Incandescent System (Two 20W Lamps, Charger)	$39.50
Fluorescent System (Two 6W Lamps, Ballast, Charger)	$17.50
ANNUAL SAVINGS PER EXIT	**$22.00**

SUGGESTED SPECIFICATION

Furnish and install Chloride Systems' Reference Series Exit Sign as indicated on the plans.

Exits shall be U.L. Listed.

Exit frame and mounting canopy shall be a die-cast aluminum construction with a baked enamel finish in black or dark bronze.

Canopy and exit frame shall be a modular design that will enable field assembly for ceiling, either end, or surface mounting.

Exit frames shall mount to canopy with twin, anti-twist mounting lugs. Exit frames shall have three mounting positions concealed by knockouts. All units shall have 6" high letters with 3/4" stroke.

Open face signs shall have letters and arrows screen printed onto translucent thermo-plastic.

Stencil face signs shall have deep brushed aluminum face with knockout arrows and a color intensity, glass fiber reinforced, fire resistant lens. Exits shall have internal reflectors to evenly distribute face light to the directional arrows.

Exit frames shall have inter-changeable stencil face plate, open face plate and mounting back plates for field conversion capability. Downlight shall be provided through a prismatic lens recessed into lower aperture. Exits shall utilize two, six watt FT6 lamps for normal and emergency operation.

Self-powered electrical components, i.e., batteries, transformer, charger, shall be concealed inside the universal mounting canopy. A rocker type test switch and LED charge monitor light shall be mounted on the canopy.

Exits shall be dual voltage (120/277V) that shall automatically provide 90 minutes of emergency illumination in the event of a power failure. Solid state circuitry shall provide Brownout protection and have a Low Voltage Disconnect circuit to protect the batteries from deep discharge damage.

Battery shall be either:

Sealed, maintenance free, sintered plate nickel cadmium with a polypropylene separator to enable reliable operation in ambient temperatures up to 131°F (55°C) utilizing a constant current charger;

Sealed, maintenance free, pure lead, utilizing a solid state two rate charger.

Batteries shall be charged to rated capacity in accordance with U.L. Standard 924.

How to order

Fluorescent, self-powered emergency exit signs

When ordering complete exits develop the ordering number in the sequence shown.

EXAMPLE: DB F N 1 R M2 V

- FINISH, Dark Bronze — DB
- LAMP, Fluorescent — F
- BATTERY TYPE, Nickel Cadmium — N
- NUMBER OF FACES — 1
- STYLE OF FACE, Stencil – Red — R
- MOUNTING (optional), LEFT END — M2
- OPTIONS, Voltmeter — V

Self-powered exits are dual voltage, 120/277V for normal AC operation. Batteries provide 90 minutes of emergency operation during a power outage.

FINISH	Dark Bronze	DB
	Black	BK
LAMP	Fluorescent	F
BATTERY TYPE	Nickel cadmium	N
	Pure lead	L
FACE	Single face	1
	Double face	2
	Stencil face – Red	R
	Stencil face – Green	G
Specify arrows for open face exits	Open face – Red on White	RW
	Open face – Green on White	GW
	Open face – White on Red	WR
	Open face – White on Green	WG
	Specify Arrows for open face exits.	
	No Arrow	3
	Right Arrow	4
	Left Arrow	5
	Double Arrow	6
	Left and Right Arrow (for double faced exits)	7

The canopy is normally shipped unattached to the exit frame. To have the canopy mounted at the factory, use the "M ..." adder to specify mounting configurations.

FACTORY MOUNTED CANOPY (OPTIONAL)	Top or End mount only.	
	Top	M1
	Left End	M2
	Right End	M3
FACTORY BUILT-IN OPTIONS	Tamperproof	TP
	Voltmeter	V

ACCESSORIES

PENDANT MOUNT-KIT	Includes 12" stem and mounting hardware.	
	Dark Bronze	DB PKITCE
	Black	BK PKITCE
NON-STANDARD PENDANT MOUNT-KIT Specify Length	Dark Bronze	DB PKITCES
	Black	BK PKITCES
DOOR KIT Specify arrows for open face exits	Stencil face – Red	DK CER
	Stencil face – Green	DK CEG
	Open face – Red on White	DK CERW
	Open face – Green on White	DK CEGW
	Open face – White on Red	DK CEWR
	Open face – White on Green	DK CEWG
BACK PLATE	To convert double face exit to single face.	
	Dark Bronze	DB BCE
	Black	BK BCE

INTERNATIONAL SYMBOLS

International symbols on open face only – Use letter designations as "FACE" designation when ordering.

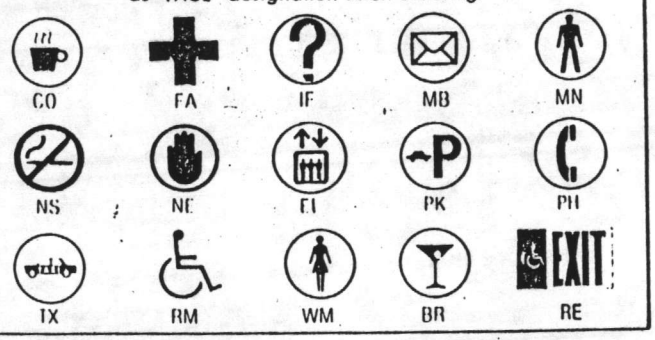

Standard Colors: Black Symbols on White Background.
Wheelchair: White Symbol on Blue Background.

OPEN FACE – ARROWS

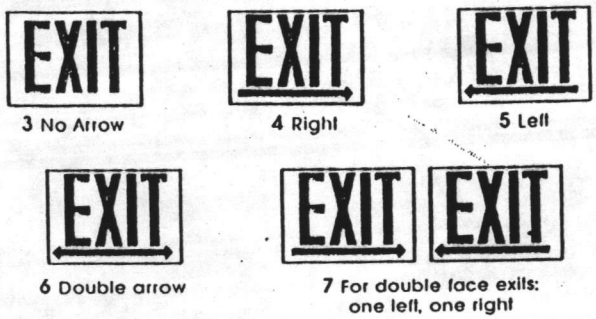

3 No Arrow

4 Right

5 Left

6 Double arrow

7 For double face exits: one left, one right

CANOPY MOUNTING

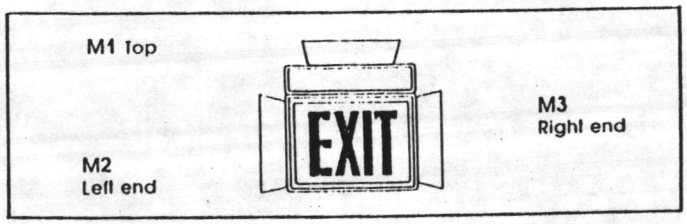

REPLACEMENT LAMPS

Lamp No.	Watts	Order No.
F16	6	019-002-0034

REPLACEMENT BATTERY PACK

Nickel Cadmium — Order Number 100-003-0019

Pure Lead — Order Number 100-003-0020

CHLORIDE SYSTEMS

CHLORIDE Systems, U.S.A.
Mallard Lane, North Haven, Conn. 06473
Phone (203) 624-7837 • Tlx. 963-553

Specifications subject to change without notice.

Printed in U.S.A.

Item 12e 16510-1.4.1e
16510-2.10.1

Type T Chloride #NMF50-IDCHY-2

SERIES NMF/NNM and NTMF/NTNM

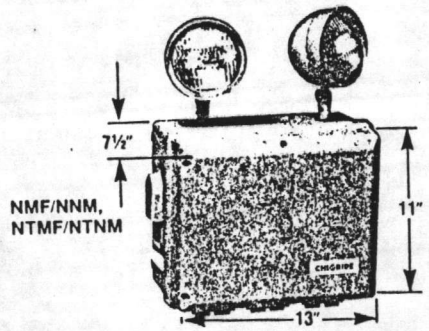

NEMA Industrial Emergency Lighting Units

Series meets requirements for operation under NEMA 1, 2, 3, 3R, 3S, 4, 4X, 12 and 13 conditions. Per NL 51

(UL) Listed Emerg. Light Equip. 871C 638F

Note: IDCHY is 6 volt, 12 watt Beige Par 36 lamp fixture

Chloride's 6-volt (NMF, NNM) and 12-volt (NTMF, NTNM) NEMA series industrial emergency lighting units are designed for use in hostile environments potentially damaging to internal components by water, fibers, dirt, dust, and corrosive gases.

Water & Corrosion Resistant Cabinet

The Chloride NEMA series incorporates a glass-reinforced, structural foam cabinet built for protection against hostile environments.

Cabinets are silicone sealed and/or gasketed around all entryways, push-to-test switch is completely enclosed and corrosion resistant bushing is provided for field installed conduit entry. Breather devices allow for ventilation of battery gases without admitting damaging elements. All external hardware is stainless steel.

A unique door-hinging device allows for removal of door panel or retention of the hinge by means of a small field adjustment.

Maintenance-Free Batteries

NNM and NTNM units feature a sealed, rechargeable nickel-cadmium battery, steel clad with sintered plate construction. The nicad battery features long life and superior resistance to temperature extremes.

NMF and NTMF units incorporate a sealed lead battery with gel electrolyte in a plastic case and top.

Advanced Electronics

NMF and NTMF units feature low voltage disconnect to protect batteries against excessive discharge and lockout feature that permits installation of units to a non-energized circuit without activating emergency operation until circuit is energized.

The NMF 75 unit also features "brownout" circuitry that activates emergency lighting whenever AC power falls below 80% of normal.

Additional Electrical Features

Dual voltage 120/277 safety isolation transformer is standard along with AC monitor light, enclosed press-to-test switch and load relay with fused distribution circuit.

Battery Chargers

Provide a high rate charge immediately and automatically upon restoration of normal electrical power. When float voltage is reached, the charge level is automatically and continuously maintained. For nicad batteries charger is a constant current type. For lead acid batteries, charger is a voltage regulated device. Both feature solid-state components and recharge the batteries as required by UL 924.

Sealed Beam Lamps

Both 8 watt sealed beam quartz halogen and 18, 25 and 30W tungsten lamps are available in corrosion resistant, rain-tight housings with matching swivels.

Suggested Specifications

A 6-(or 12) volt Emergency Lighting System built in accord with Underwriters' Laboratory Standard 924 and to meet requirements for NEMA 1, 2, 3, 3R, 3S, 4, 4X, 12 and 13 classifications; installation in accord with Article 700 of the National Electrical Code.

CABINET—Shall be injection-molded, glass-reinforced structural foam, industrial gray in color. All entryways shall be fully gasketed and silicone sealed. All external screws to be stainless steel. Cabinet venting to be by rain-tight breather devices.

LIGHTING HEADS—Sealed beam lamps of _____ volts _____ watts halogen type (8 watts only) or tungsten (18, 25, 30 watts) as required. Lamps to be housed in rain-tight, gray thermoplastic housings with matching swivels and stainless steel screws. Factory equipped openings for electrical connections shall be silicone coated.

BATTERIES—Nickel cadmium batteries shall be of sintered plate construction, steel-clad and completely maintenance free. OR Maintenance-Free Lead Calcium—shall consist of lead-calcium plates in gel electrolyte. Batteries shall be completely maintenance-free and be enclosed in plastic cases and tops.

CHARGER—(Both battery types) shall be completely automatic and capable of recharging batteries in accord with the provisions of UL 924. Charger shall provide a high charge rate immediately upon restoration of AC power and a float rate to maintain the battery at float voltages.

For Maintenance-Free Nickel cadmium—(NNM and NTNM) the charger shall be a constant current device consisting of solid-state components. OR for Maintenance-Free Lead-calcium—The charger shall be a voltage regulated device consisting of solid-state components.

STANDARD CONTROLS—Series NMF/NNM/NTMF/NTNM6 and 12V units shall be equipped with an enclosed "sealed push-to-test" switch which simulates a power failure and tests the entire system. It shall be equipped with an AC monitor light—DC load relay and fused distribution load circuit. Units shall include dual voltage 120/277 transformer.

Series NMF and NTMF shall include lockout circuit and low voltage disconnect. Unit shall be UL listed.

Equipment shall be CHLORIDE SERIES NMF, NNM, NTMF, OR NTNM capable of supplying _____ watts for _____ hours.

Lamp Type		Lamp Watt Rating	DC Voltage	Lumen Output	Replacement Lamp No.
Use With 6-Volt NMF NNM Series	IQ	8	6	180	019-001-7551
	IA	18	6	220	019-001-4014
	IL	25	6	350	019-001-4510
	IC	30	6	450	019-001-4515
Use With 12-Volt NTMF NTNM Series	ID	8	12	180	019-001-7555
	IE	18	12	220	019-001-4414
	IK	25	12	350	019-001-4446
	IG	30	12	450	019-001-4405

Number of lamps operable with Series NMF/NNM and NTMF/NTNM

	Output Watts	Input Watts	Actual Watts by Discharge Hr.				1.5 Hours			
6-VOLT			1.5	2	3	4	IQ	IA	IL	IC
NMF25	25	18	25	20	15	12	3	1	1	—
NMF50	50	18	50	40	30	22	6	2	2	1
NMF75	75	40	75	60	48	36	9	4	3	2
NNM18	18	18	18	14	10	8	2	1	—	—
NNM25	25	18	25	20	15	12	3	1	1	—
NNM50	50	18	50	40	28	22	6	2	2	1
12-VOLT							ID	IE	IK	IG
NTMF50	50	18	50	40	30	22	6	2	2	1
NTNM50	50	18	50	40	28	22	6	2	2	1

Item # 12 f
16510-1.4.1 e
16510-2.10.1
Page 1 of 2
TYPE G-6v Chloride #CMF50=DCHY2-ML-V-3/3
16

CHLORIDE
... Life Safety Products & Systems

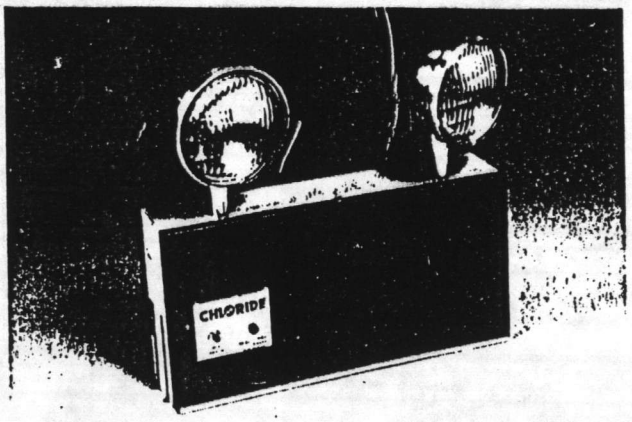

CMF25Y2 ILLUSTRATED
CMF18 • CMF25 • CMF36

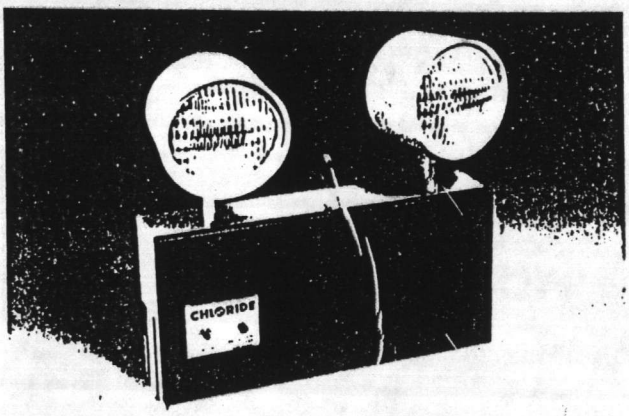

CMF25TS2 • CMF50TN2

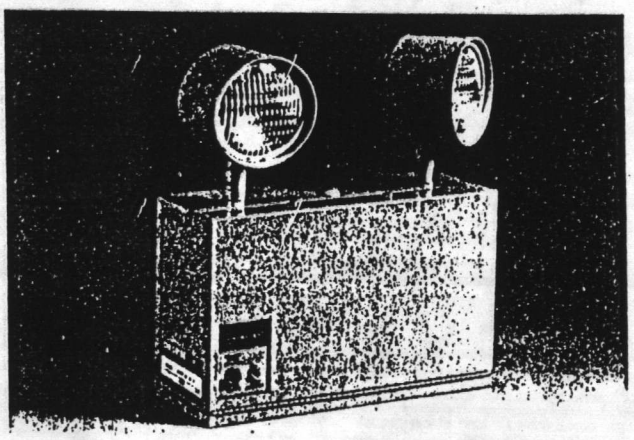

CMF75

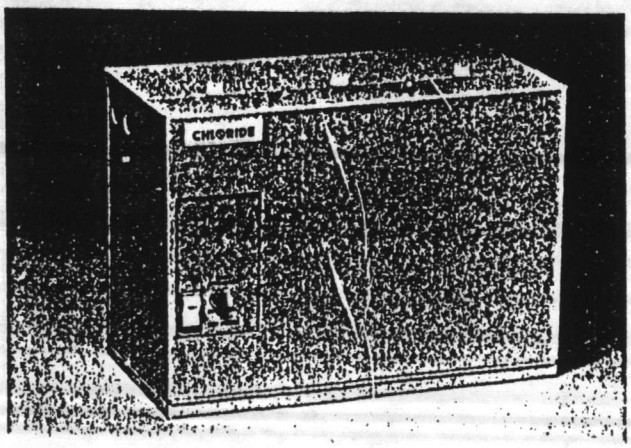

CMF125

6-Volt
Maintenance Free Emergency Lighting Equipment
Per NL-51
Series "CMF"

- Maintenance Free Battery
- Low-Voltage Disconnect
- 120/277 Dual Voltage
- 'Lockout' Feature
- 'Brownout' Protection

Featuring
ACCU-CHIP™
Precision Hybrid Charger

UL Listed
Emerg. Light Equip.
871C,638F

Description
Chloride's 'CMF' Series (Chloride Maintenance Free) offers a wide range of sealed, maintenance-free emergency lights. The scope of the Series includes a compact decorator woodgrain front cabinet with either two sealed beam or Chloride T.H.E. halogen heads mounted as standard equipment; or a choice of larger sized cabinets with additional capacity, where a number of selected type heads can be run on the cabinets as well as remotely.

Battery
The rechargeable, maintenance free, lead acid battery has lead calcium plates with starved electrolyte in a sealed plastic case. This battery is recommended where low initial cost is a prime consideration, where no maintenance is an advantage, and where operation will be in ambient temperatures of 32°F to 115°F.

Charger
CMF18 through 50 feature ACCU-CHIP™, a sophisticated hybrid circuit designed specifically for emergency lights. ACCU-CHIP is a battery friendly charger which maximizes battery life and performance by providing a highly reliable and accurate charge.

Upon restoration of AC power, ACCU-CHIP provides a high current charge. When float voltage is reached, a constant voltage trickle charge maintains batteries at full capacity.

CMF75 & 125 feature a two-rate, voltage regulated, charger. Upon restoration of AC power, the charger automatically provides a high current charge. When float voltage is reached, the charger provides a trickle charge to maintain batteries at full capacity.

Recharging to rated voltage, for all units, will be accomplished in accordance to U.L. Standard 924 requirements.

Standard Controls
Series 'CMF' units are equipped with: "Push-to-test" switch which simulates power failure and tests the complete system; 120/277 dual voltage transformer; LED charge monitor; low voltage disconnect circuit which prevents severe battery discharge during extended power outages; 'lockout' feature (AC activated load switch) which prevents discharge of battery during installation; load relay with one or two fused distribution load circuits; and brownout protection which energizes the emergency lights when utility power drops so low as to dim incandescent lights and extinguish HID and fluorescent lamps.

Meets U.L., NEC, NFPA and OSHA standards. Penna. Certificate of Approval.

Series "CMF" by CHLORIDE

NUMBER & TYPE OF LIGHTING HEADS AVAILABLE FOR SERIES "CMF" UNITS (based on 1.5, 2, 3 and 4-Hour discharge times). ALSO . . . ACTUAL AVAILABLE WATTS PER UNIT AT 1.5, 2, 3 and 4-HOUR DISCHARGE PERIODS.

Catalog No.	Input Watts	Output Watts	Actual Watts by Discharge Hr				Number of lam											
							1.5 Hours							2 Hours				
			1.5	2	3	4	TS	TN	TT	Y	CHY	A	L	TS	TN	TT	Y	CHY
CMF18	18	18	18	15	11	9½	2	2	1	2	1	1	–	2	1	1	1	1
CMF25	18	25	25	20	13	11	3	2	2	2	2	1	1	2	2	1	2	1
CMF36	18	36	36	30	20	16	5	4	3	4	3	2	1	4	3	2	3	2
CMF50	18	50	50	40	27	22	7	5	4	5	4	2	2	5	4	3	4	3
CMF75	40	75	75	66	50	40	10	8	6	8	6	4	3	8	7	5	7	5
CMF125	60	125	125	100	81	60	17	13	10	13	10	6	5	14	11	8	11	8

OPTIONS

Option Availability	Voltmeter (V)	Ammeter (A)	AC Power On Off (ACP: Specify 120V ☐ 227V ☐)	DC Power On Off (DCP)	Time Delay (TD: Specify 120V ☐ 277V ☐)	AC Fuse (ACF: Specify 120V ☐ 277V ☐)	Mounting Shell (ML/MS)	Wire Guard (WG-5)	Cord & Plug (18/3)
CMF18	\		\	\		\	ML	WG5	18/3
CMF25	√		√	√		√	ML	WG5	18/3
CMF36	√		√	√		√	ML	WG5	18/3
CMF50	√*		√	√		√	ML	WG5	16/18/3
CMF75	√*	√*	√	√	√	√	MS	WG5	18/3
CMF125	√	√	√	√	√	√	MX	WG	18/3

*Choice of either voltmeter or ammeter

Cabinets

Chloride's 'CMF' Series equipment is offered in three different cabinet versions. (Photos and dimensions on this Data Sheet). All unit cabinets have been manufactured of 20 gage steel (GSA accepted) with a beige baked enamel finish. Smaller capacity cabinets include decorator woodgrained vinyl front. All cabinets have knockouts in rear and side for AC and DC connections and include keyhole mounting slots. Shelves are also available for all units. Series' cabinets permit easy removal of charger and control chassis and can accommodate two to three lighting heads installed on unit.

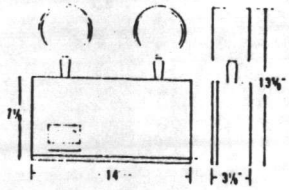

CMF18 16 lbs.
CMF25 17 lbs.
CMF36 18 lbs.
CMF50 20 lbs.

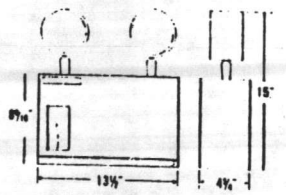

CMF75 30 lbs.

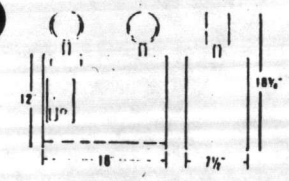

CMF125 35 lbs.

Lamps

Chloride's T.H.E. tungsten halogen thermoplastic lamp head as well as sealed beam type lamps are offered for use with Series 'CMF'. Selection of desired type and wattage lamps should be made from the Lamp Table below. The number of lamps available and duration periods for which they can operate utilizing Series 'CMF' units appear in Lamp/Hour Table.

Lamp Type		Wattage	Lumen Output	Replacement Lamp No.
	TS	7	170	019-002-0031
	TN	9	210	019-002-0036
	TT	12	300	019-002-0029
	Y	9	180	019-001-7613
	CHY	12	320	019-001-7553
	A	18	220	019-001-4014
HALOEEN	L	25	350	019-001-4510

TYPE G-12v Chloride #TMF50-DNY2-ML-V-3/3
16

Item # 129

CHLORIDE

12-Volt

Life Safety Products & Systems.

16510-1.4.1e
16510-2.10.1

Maintenance Free Emergency Lighting Equipment

Per NL-51

Series "TMF"

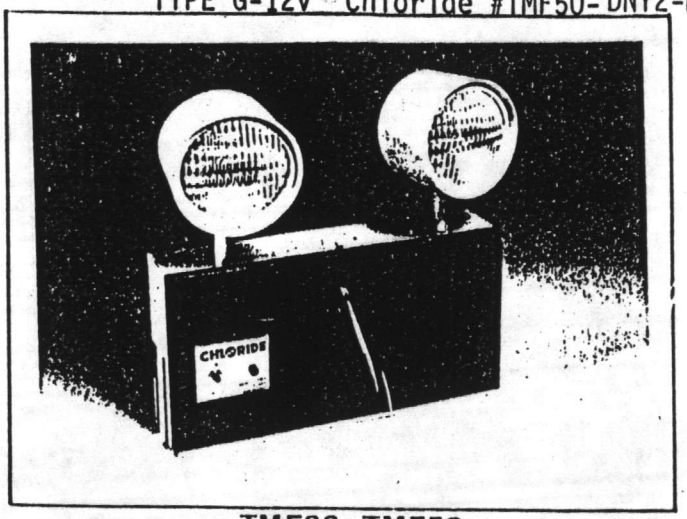

TMF36 • TMF50

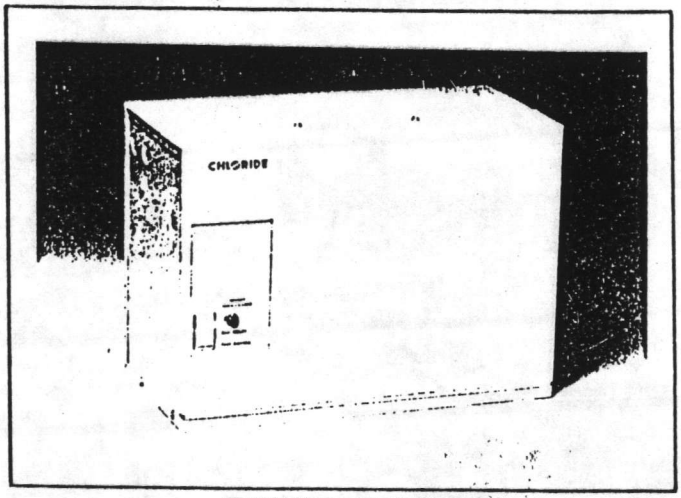

TMF150 • TMF250

- Maintenance Free Battery
- Low-Voltage Disconnect
- 120/277 Dual Voltage
- Lockout Feature
- Brownout Protection
- U.L. Listed
- 2-Color LED

Listed Emerg Light Equip. 871C.638F

When battery float voltage has been reached, the high charge ends and the charger reverts to its normal function of providing a continuous low rate charge to maintain the battery at its optimum voltage.

Recharging to rated voltage will be accomplished in accordance to U.L. Standard 924 requirements. Unit is furnished at 120/277 volts, 60 Hz.

Description

CHLORIDE's 'TMF' Series (Twelve-Volt Maintenance Free) offers a range of maintenance-free emergency lighting units for many small to medium sized 12-volt industrial, commercial and institutional applications. The Series includes a compact decorator woodgrain front cabinet or a larger sized cabinet for additional capacity requirements. Series 'TMF' cabinents will accommodate the mounting of up to three T.H.E. tungsten halogen or sealed beam heads and are equipped with the necessary connections for remote lighting head installation.

Battery

The rechargeable, maintenance-free, lead calcium battery furnished with Series 'TMF' has lead calcium plates, limited electrolyte, a sealed top and plastic case. This type of emergency lighting battery is recommended where lowest initial cost is a prime consideration; where no maintenance is a positive advantage and where operation will be in an ambient temperature of 32°F to 115°F. The 'TMF' Series battery has an unconditional one-year warranty with an additional 5-year pro-rata warranty.

Charger

Unit is equipped with a fully automatic, voltage regulated, solid-state charger. Charger provides a high charge rate immediately and automatically upon restoration of AC electrical service after a power failure. Lamps are automatically disconnected when battery voltage falls to 80% of nominal during a prolonged power outage in order to protect the battery from deep discharge or sulfation.

Standard Controls

Series 'TMF' units are equipped with: "Push-to-test" switch which simulates power failure and tests the complete system; low voltage disconnect circuit which eliminates excessive battery discharge during prolonged power outage. TMF150 and TMF250 have 2-color LED charge monitor . . . green-ready, red-high charge, changes color to indicate state of charge. Load relay with one or two fused distribution load circuits (two 15-amp circuits — TMF150 and TMF250); 'lockout' feature — an AC activated load switch which prevents discharge of battery during installation; and 'brownout' circuit which energizes emergency lights when line voltage drops to where fluorescent lamps extinguish.

Lamps

Chloride's T.H.E. tungsten halogen thermoplastic lamp head as well as sealed beam lamps are offered with the Series 'TMF'. Selection of desired type and wattage lamps should be made from the Lamp Table below. The number of lamps available and duration periods for which they can operate utilizing Series 'TMF' units appear in Lamp/Hour Table on back side of Data Sheet. (Note — the TMF50 comes standard with two TV lamps. Lamps are optional on the TMF150 and TMF250.

Lamp Type		Wattage	Lumen Output	Replacement Lamp No.
	TV	12	300	019-002-0032
	NY	12	180	019-001-4044
	E	18	270	019-001-4414
Halogen	K	25	375	019-001-4446

Meets U.L. NEC, NFPA and OSHA Standards. Penna. Certificate of Approval.

TMF

A1P4M984

NUMBER & TYPE OF LIGHTING HEADS AVAILABLE FOR SERIES 'TMF' UNITS

Catalog No.	Input Watts	Output Watts	Actual Watts By Discharge Hour				Number of Lamps Which Can Be Run Off Series 'TMF' Units															
							1.5 Hours				2 Hours				3 Hours				4 Hours			
			1.5	2	3	4	TV	NY	K	E	TV	NY	K	E	TV	NY	K	E	TV	NY	K	E
TMF36	18	36	36	28	20	16	3	3	1	2	2	2	1	1	1	1	—	1	1	1		—
TMF50*	18	50	50	40	26	22	4	4	2	2	3	3	1	2	2	2	1	1	1	1	-	1
TMF150	80	150	150	132	100	80	12	12	6	8	10	10	5	7	8	8	4	5	6	6	3	4
TMF250	80	250	250	200	160	120	20	20	10	13	16	16	8	11	13	13	6	8	10	10	4	6

*TMF36 and TMF50 — Comes standard with two TV lamps.
TMF150-250 lamps optional.

SUGGESTED SPECIFICATION

Equipment shall be a 12-volt Emergency Lighting unit of selected capacity maintenance free, medium life, sealed lead battery and solid-state fully automatic voltage regulated charger able to recharge the battery in accordance with U.L. Standard 924. Units shall include: "Push-to-test" switch; 120/277 dual voltage transformer; low voltage disconnect circuit; load relay with one or two fused distribution circuits; brownout protection; lockout feature. Units shall have positive LED charge monitor. TMF150, 250 units shall also include two-color LED charge monitor. Equipment shall be available in two cabinet sizes . . . decorator compact with woodgrain vinyl front and standard type . . . both constructed of 20-gauge steel with standard beige baked enamel finish, keyhole mounting slots, removable charger and control chassis, and shall be able to accommodate the mounting of up to three T.H.E. tungsten halogen or sealed beam heads on unit. Equipment shall be U.L. Listed.

Equipment shall be CHLORIDE SERIES 'TMF'

OPTIONS (*Options available on TMF150 and TMF250 only)

V	Voltmeter
A	*Ammeter
ACP	AC Power — On/Off Switch — Specify 120V ☐ or 277V ☐
DCP	DC Power — On/Off Switch
TD	*Time Delay – Specify 120V ☐ or 277V ☐
MR	*Mercury Relay
WG5	Wire Guard TMF36, TMF50
WG	Wire Guard TMF150, TMF250
ML	Shelf TMF36, TMF50
MX	Shelf TMF150, TMF250
16/3	Plug & Cord
ACF	AC Fuse – Specify 120V ☐ or 277V ☐

HOW TO ORDER

TMF	150	X
12-Volt Maintenance Free	Output Watts	Options

Cabinet

Chloride's 'TMF' Series equipment is offered in two cabinet versions. (See dimensional information below). Smaller capacity cabinets offers decorator styling with woodgrain vinyl front. 'TMF' unit cabinets are manufactured of 20-gauge steel (now GSA accepted) with a beige baked enamel finish and include knockouts on rear and side for AC and DC connections as well as keyhole mounting slots. Shelves are also available for both cabinet sizes. Cabinet design permits easy removal of charger and control chassis and can accommodate up to three lighting heads installed on unit.

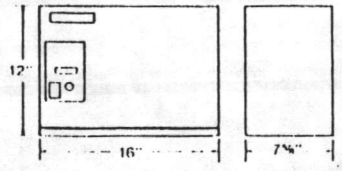

	Weight
TMF150	45 lbs.
TMF250	50 lbs.

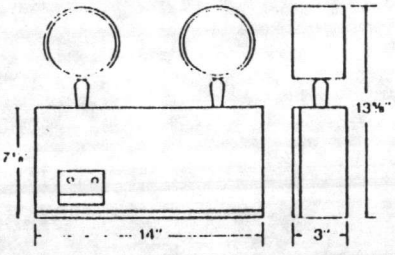

TMF36	15 lbs.
TMF50	22 lbs.

LIMITED WARRANTY

Series TMF Cabinet & Charger . . . 1 year guarantee . . . Battery (Maintenance Free Lead Cadmium) . . . 1 year guarantee . . . Additional 5 year guarantee pro-rata.

The Chloride Series TMF unit and battery, excepting fuses and/or lamps, shall be guaranteed for a period of one (1) year from date of purchase against defects of material and/or workmanship. The unit's maintenance free lead cadmium battery is additionally warranted subject to proper maintenance in accordance with recommended practice and installation for 5 years on a pro-rata basis. Should such a defect appear in the unit's battery more than one year but less than 6 years after date of purchase, Chloride Systems on return of unit's defective battery will repair or replace same at a cost equal to the net contractor price reduced by a percentage obtained by multiplying 5% by the number of years remaining in the six years at the time of failure; any fraction of a year shall be regarded as a whole year remaining, and such adjustment shall be purchaser's exclusive remedy. The foregoing warranty is in lieu of all other warranties expressed or implied or merchantability, fitness for a particular purpose or any other thing. In no event shall Chloride Systems be responsible for consequential damages. Except as stated in this Warranty, Chloride Systems shall not be liable for any defects, in, or breach of any contract relating to the quality of or performance of Series TMF under any theory of law including without limitation, contract negligence, strict liability or misrepresentation.

This warranty shall be null and void unless the unit(s) are installed within 180 days of purchase from Chloride Systems.

CHLORIDE Systems, U.S.A
Ballard Lane, North Haven, CT 06473
Phone (203) 624-7837 • TLX: 963553

3195 Park Road .Unit F
Benicia, CA 94510
(707) 745-5007 • TLX:171808

CHLORIDE SYSTEMS

Specifications subject to change without notice

Printed in U S A

Item # 12h 16580-1.4.1e
16510-2.10

TYPE G-6v Chloride #CMF50-DCHY2-ML-V-16/3
TYPE G-12v Chloride #TMF50-DNY2-ML-V-16/3

CHLORIDE
. . . Life Safety Products & Systems.

REMOTE LIGHTING FIXTURES

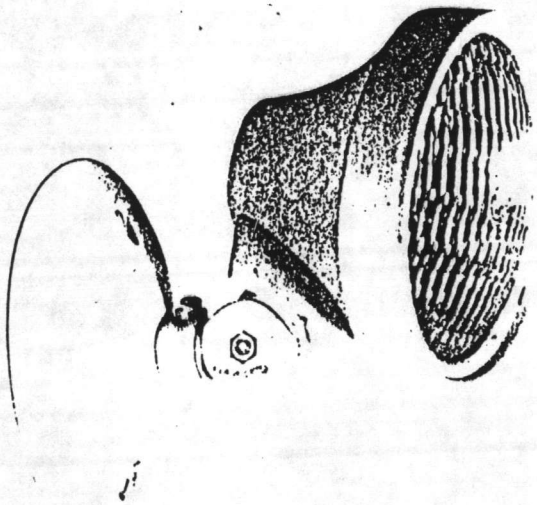

This fixture is standard on 6 and 12 volt emergency lighting units.

The remote fixture comes complete with a beige or white thermoplastic housing, mounting plate and swivel. Available in 6 or 12 volt, tungsten or tungsten halogen, PAR 36 sealed beam or wedge-based lamps. A wide choice of watts and foot candle distribution provides flexibility in achieving desired emergency light levels.

Features:

Per NL-54

- Corrosion Resistant
- Durable Thermoplastic Construction
- Fully Adjustable Swivel
- Sealed Beam Head with WP Mounting Plate is Suitable for NEMA 4, 4X and 12 Applications

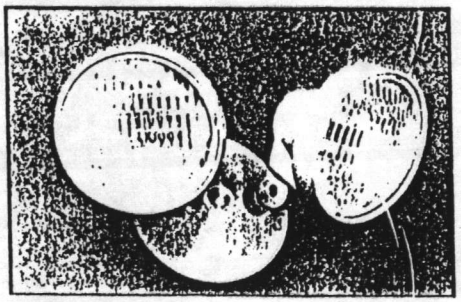

Headsused on Emergency units

PAR 36 SEALED BEAM SELECTOR

	VOLT	LAMP WATTS	CATALOG NUMBER BEIGE	CATALOG NUMBER WHITE	REPLACEMENT LAMP NO.
~~TUNGSTEN~~	6	9	DY	WY	7613
		18	DA	WA	4014
		25	DL	WL	4510
		30	DC	WC	4515
	12	12	DNY	WNY	4044
		18	DE	WE	4414
		25	DK	WK	4446
		30	DG	WG	4405
TUNGSTEN HALOGEN	6	8	DQ	WQ	7551
		12	DCHY	WCHY	7553
	12	8	DD	WD	7555

WEDGE-BASED LAMP SELECTOR

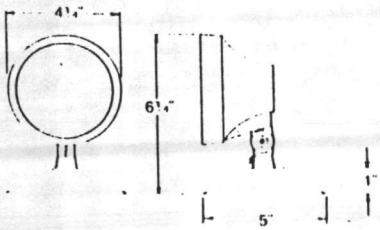

	VOLT	LAMP WATTS	CATALOG NUMBER BEIGE	CATALOG NUMBER WHITE	REPLACEMENT LAMP NO.
HIGH INTENSITY TUNGSTEN	6	6	DTA	WTA	19-2-50
		9	DTB	WTB	19-2-45
	12	9	DTC	WTC	19-2-53
TUNGSTEN HALOGEN	6	7	DTS	WTS	19-2-31
		9	DTN	WTN	19-2-36
		12	DTT	WTT	19-2-29
	12	12	DTV	WTV	19-2-32

TYPE N KURT VERSEN #V5637-70-277V-DL Item #13

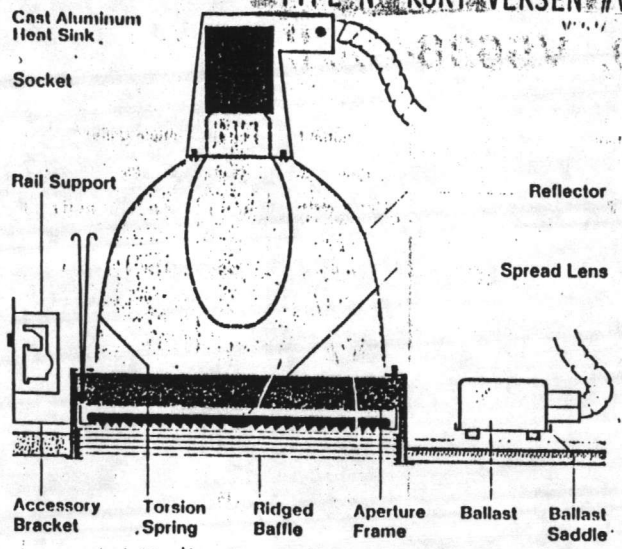

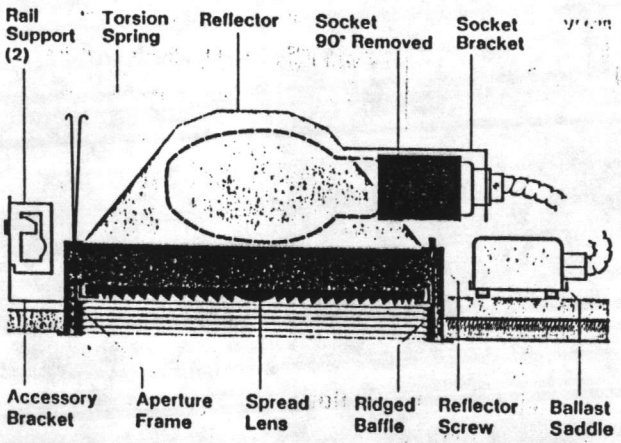

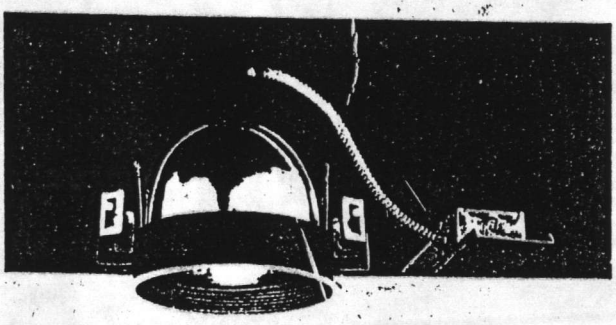

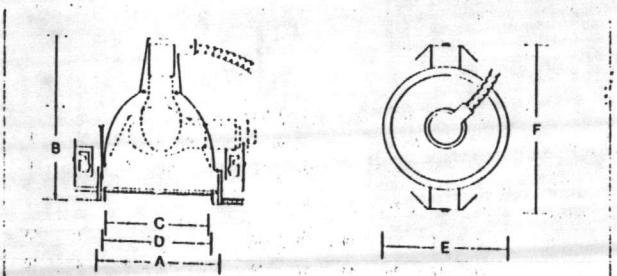

Catalog Number	A Recess Opening	B Recess Depth	C Lens	D Aperture	E Minimum Width	F Maximum Width	Watts	Type
V5637-70120*	10" 254mm	13½" 343mm	8½" 216mm	9" 229mm	10½" 267mm	13½" 343mm	70	E-23½, BT-25
V5638-100120*	12¼" 311mm	7¾" 197mm	10¾" 273mm	11¼" 286mm	14½" 368mm	16¼ 413mm	100	E-23½, BT-25
V5638-150120*	12¼" 311mm	7¾" 197mm	10¾" 273mm	11¼" 286mm	14½" 368mm	16¼" 413mm	150	E-23½, BT-25, 55 V Arc

*Supplied with 120V ballast. For 277V change the last digits of the catalog number from 120 to 277. Example: V5637-70277. Show other voltages similarly.

V5637-70120 V4
V5638-100120
V5638-150120

16510-1.4.1a
16510-2.4
Per detail sheet E-7

High Pressure Sodium

Applications
Designed for wide angle distribution. Provides broad pattern even illumination. Use in open areas, in soffits around building exteriors, wherever recess depth is limited.

Design Features
A semi-specular anodized Verbrite reflector forms an effective optical system with the fresnel spread lens. The horizontal* socket permits mounting in shallow plenums or where architectural building members interfere. Regressed construction reduces lens brightness. The aluminum ridged baffle fragments reflected light for further brightness control. The lens assembly is held to the ceiling by constant pressure torsion springs and is retained during relamping. Top or bottom service.

Ballast
Auto-transformer high power factor constant wattage ballasts are standard at 120V or 277V, other voltages available. Thermosetting fill for superior heat dissipation and sound absorption makes all ballasts run unusually cool and quiet. Individually cased for detached location adjacent to the fixture. Remote location separates ballast heat from the fixture. Ballast is thermally protected and supplied with a universal mount saddle, vibration dampeners, 4 feet of flexible conduit and connectors. Operating temperature range from –20°F to 105°F. UL listed. For inaccessible ceilings see accessories listing.

16510 2.2.2

Finish
Exposed trim is durable matte white enamel. The ridged baffle is optical matte black.

General
Fixtures are individually packed, ready for installation with 4½ feet of insulated wire leads and ceiling mounting brackets. Ballast saddle assembly has a 22 cubic inch splice box suitable for 75°C wiring. UL listed, union made IBEW.

Accessories
For 27" support rails, add R2 to catalog number.
For 52" support rails, add R5 to catalog number
For colored lens risers, add CR plus color to number.
For damp label, add DL to catalog number.
For ballast fuse, add U to catalog number.
For Q150W T-4 emergency circuit, add EC to number.
For instant start of auxiliary lamp on start up or if outage occurs, add AO to catalog number.
For inaccessible ceilings, add IN to catalog number.
Special ballast release is provided for service.

*Model V5637-70120 has a vertical lamp position.

Brightness

Catalog Number	Lamp	80°	70°	60°	50°
V5637-70120	70W E-23½/D	6	81	195	2,646
V5638-100120	100W E-23½/D	30	310	569	1,001
V5638-150120	150W E-23½/D	99	602	1,103	1,931

Data in footlamberts

kurt versen
Kurt Versen Company Incandescent & HID Lighting
Westwood, New Jersey 07675

ADVANCE® MARK III BALLASTS

Help Reduce Fluorescent Lighting Costs

Item #14
Page 1 of 4
16510-1.4.1a
16510-2.1.2.1

Certified by California Energy Commission

ADVANCE
TRANSFORMER CO.
A NORTH AMERICAN PHILIPS COMPANY

FEB 24 '87 14:44 HUBBELL LIGHTING-C'BURG. VA P.3/6

ADVANCE® Mark III Ballasts are certified by the State of California Energy Commission in their adopted energy efficiency standards for fluorescent lamp ballasts.

This mandate applies to ballasts covering the most popular lamp types shown below—**both as components in fixtures and as ballasts for replacement use.**

The certified ADVANCE Mark III Ballasts cover these rapid start and slimline lamp applications (see complete specifications on back page):

Lamps	Circuit Volts	California Certified ADVANCE Mark III Ballasts
(2) F40T12/RS (Standard and Energy Savers)	120 277	R2S40-TP V2S40-TP
(1) F40T12/RS (Standard and Energy Savers)	120 277	R140-TP V140-TP
(2) F96T12 Slimline (Standard and Energy Savers)	120 277	R2E75-S-TP V2E75-S-TP

When you specify or purchase these ADVANCE Mark III ballasts, you are assured that you are complying with the fluorescent lamp ballast energy efficiency standards of the California Energy Commission.

These standards were established to reduce the electric energy consumption growth rate and to do this without adding total cost to the consumer over the life of the product. ADVANCE Mark III Ballasts help achieve both of these goals through their energy saving design which results in an extremely fast payback.

ADVANCE® Mark III Ballasts Are the Logical Energy Saving Choice

1. BALLAST ENERGY SAVINGS—
With F40 Rapid Start lamps—Every Mark III Ballast saves a full 10 watts compared to standard two-lamp ballasts.

With F96 Slimline lamps—Every Mark III Ballast saves a full 15 watts compared to standard ballasts.

No matter what type or brand of lamps is used.

2. BALLAST/LAMP ENERGY SAVINGS—
In measurements made from tests to ANSI C82.2 Methods . . . Mark III Rapid Start Ballasts used with F40 energy saving lamps provide a total energy savings of 24 watts or 25%.

Mark III Slimline Lamp Ballasts used with F96 energy saving lamps provide a total energy savings of 50 watts or 29%.

No matter what brand of energy saving lamps is used.

3. LIGHTING FIXTURE ENERGY SAVINGS—
Mark III Rapid Start Ballasts and F40 energy saving lamps provide a savings of 39 watts for each four-lamp recessed fixture—a 22% energy savings.

Mark III Slimline Ballasts and F96 energy saving lamps provide a savings of 45 watts for each bare, two-lamp fixture—a 27% energy savings.

No matter what brand of energy saving lamps is used.

FEB 24 '87 14:45 HUBBELL LIGHTING-C'BURG, VA P.4/6

ADVANCE® Mark III Ballasts– Energy Savings and Many More Benefits

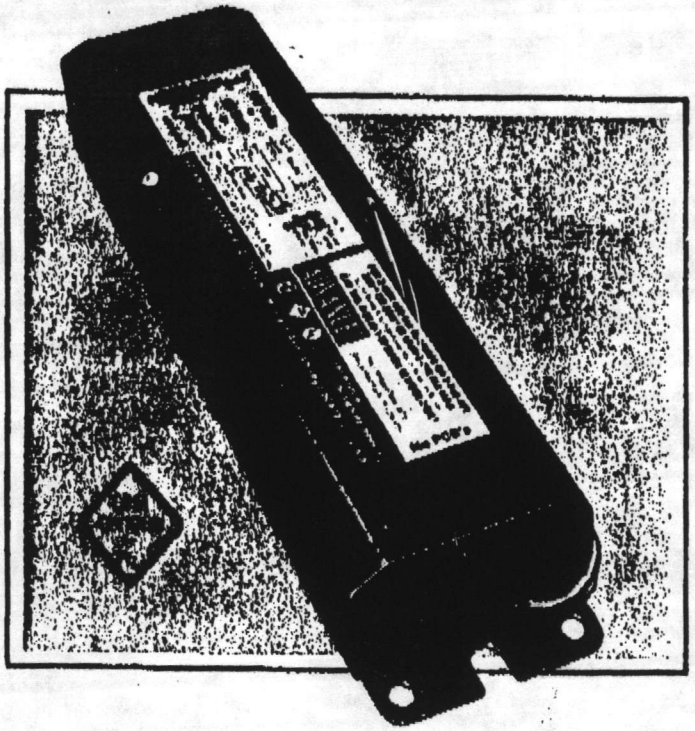

ENERGY SAVINGS PROVIDE COST SAVINGS AT EQUIVALENT LIGHT OUTPUT

Mark III Ballasts are engineered to provide maximum power savings while delivering light output consistent with rigid CBM standards.

The full 10 to 15 watts savings per ADVANCE Mark III Ballast adds up to significant energy savings for every lighting installation *while maintaining equivalent lighting levels.* And, as energy rates continue to climb, these savings will mount.

COOLER OPERATION ASSURES LONGER BALLAST LIFE

An important additional benefit is the cooler operation of Mark III Ballasts. Because they operate 20°C to 25°C cooler than standard ballasts in equivalent fixture applications, a longer life expectancy of at least twice that of standard ballasts can be anticipated.

The Long Life of Mark III Ballasts will result in reduced maintenance—one-half or fewer replacements over an equal time period, in the same installation. Air conditioning loads will also be reduced.

When you add the substantial energy cost savings to the long-life maintenance savings of Mark III Ballasts, you realize TOTAL savings which continue to pay dividends year-after-year.

LOWER STARTING TEMPERATURE WITH STANDARD LAMPS

Mark III Ballasts are CBM Approved by ETL to meet the ANSI Specifications for standard lamps. This assures reliable starting of standard lamps down to 50°F. This is an important advantage in installations where temperature ambients are substantially reduced overnight to save energy costs during peak load periods.

THE OPTIMUM ENERGY SAVING SYSTEM: ADVANCE MARK III BALLASTS PLUS ENERGY SAVING LAMPS

For greatest lighting cost efficiency, specify the ADVANCE Mark III Energy Saving System. No matter what your power rates are today, or will be in the future . . . the Mark III System will assure the greatest amount of light at the lowest possible energy costs.

Select Energy Saving Lamps from any manufacturer and pair them with ADVANCE Mark III Energy Saving Ballasts. The result—a fluorescent lighting system designed to provide the maximum versatility, efficiency and energy savings. And to these benefits may be added the cost savings of longer ballast life and reduced maintenance.

FASTER PAYBACK

Because of the greater power savings offered by Mark III Lighting Systems, your return on investment can be maximized in the shortest period of time. Request a detailed payback analysis of your particular lighting system, today.

OTHER MARK III BENEFITS

- Physically interchangeable with standard ballasts. Ideal for both new and existing installations.
- Capacitor is Non-PCB.
- ADVAN-guard® automatic resetting thermostat is included to afford Class P ballast protection.
- High power factor.

FEB 24 '87 14:48 HUBBELL LIGHTING-C'BURG. VA P.5/6

ADVANCE® Mark III Ballasts are certified by the State of California Energy Commission in their adopted energy efficiency standards for fluorescent lamp ballasts.

This mandate applies to ballasts covering the most popular lamp types shown below—**both as components in fixtures and as ballasts for replacement use.**

The certified ADVANCE Mark III Ballasts cover these rapid start and slimline lamp applications (see complete specifications on back page):

Lamps	Circuit Volts	California Certified ADVANCE Mark III Ballasts
(2) F40T12/RS (Standard and Energy Savers)	120 277	R2S40-TP V2S40-TP
(1) F40T12/RS (Standard and Energy Savers)	120 277	R140-TP V140-TP
(2) F96T12 Slimline (Standard and Energy Savers)	120 277	R2E75-S-TP V2E75-S-TP

When you specify or purchase these ADVANCE Mark III ballasts, you are assured that you are complying with the fluorescent lamp ballast energy efficiency standards of the California Energy Commission.

These standards were established to reduce the electric energy consumption growth rate and to do this without adding total cost to the consumer over the life of the product. ADVANCE Mark III Ballasts help achieve both of these goals through their energy saving design which results in an extremely fast payback.

ADVANCE® Mark III Ballasts Are the Logical Energy Saving Choice

1. BALLAST ENERGY SAVINGS—
With F40 Rapid Start lamps—Every Mark III Ballast saves a full 10 watts compared to standard two-lamp ballasts.

With F96 Slimline lamps—Every Mark III Ballast saves a full 15 watts compared to standard ballasts.

No matter what type or brand of lamps is used.

2. BALLAST/LAMP ENERGY SAVINGS—
In measurements made from tests to ANSI C82.2 Methods . . . Mark III Rapid Start Ballasts used with F40 energy saving lamps provide a total energy savings of 24 watts or 25%.

Mark III Slimline Lamp Ballasts used with F96 energy saving lamps provide a total energy savings of 50 watts or 29%.

No matter what brand of energy saving lamps is used.

3. LIGHTING FIXTURE ENERGY SAVINGS—
Mark III Rapid Start Ballasts and F40 energy saving lamps provide a savings of 39 watts for each four-lamp recessed fixture—a 22% energy savings.

Mark III Slimline Ballasts and F96 energy saving lamps provide a savings of 45 watts for each bare, two-lamp fixture—a 27% energy savings.

No matter what brand of energy saving lamps is used.

FEB 24 '87 14:45 HUBBELL LIGHTING-C'BURG. VA P.4/6

Advance® Mark III Rapid Start Energy Saving Ballasts

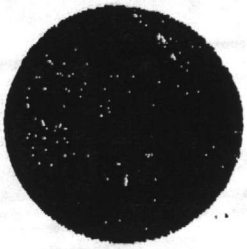

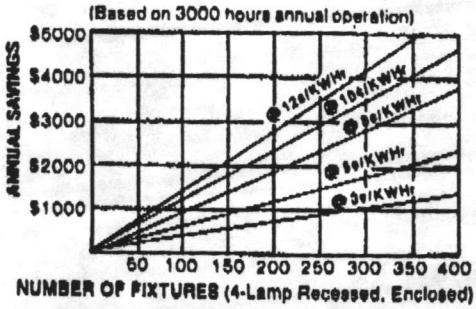

Annual Power Cost Savings

(ADVANCE Mark III Ballasts & 35W Energy Saving Lamps)

This chart shows the annual power cost dollars that can be saved by replacing standard lamps and standard ballasts with energy saving lamps and Mark III Ballasts—or by specifying the Mark III system for new installations in place of standard ballast/standard lamp combinations. Use your energy rate to determine your annual savings depending on the number of fixtures installed.

Full Light Energy Saving Ballasts 60Hz

Lamp Data: Description	Lamp Data: Watts	Circuit (Volts)	Min Starting Temp (°F)	Catalog Number (Class P)	Electrical Data: Line Current (Amps)	Electrical Data: Input (Watts)	Sound Rating	Dimensions (Inches): Length	Width	Height	Mounting	No. of Units Per Std Ctn	Wt Std Ctn (Lbs)
(2) F40T12/RS or (2) F40 Energy Savers (460 MA.; 60°F. Min.)	40 34, 35	120 277	50°	R2S40-TP V2S40-TP	.73 .32	86 (Std Lamps) 72 (F 8 Lamps)	A	9½	2⅜	1⅛	8²⁹/₃₂	10	40
(1) F40T12/RS or (1) F40 Energy Saver (460 MA.; 60°F. Min.)	40 34, 35	120 277	50°	R140-TP V140-TP	.43 .185	50 (Std Lamps) 43 (F 8 Lamps)	A	9⅛	2⅜	1⅛	8²⁹/₃₂	10	40

*Tests to ANSI C82.2 methods

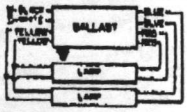

Wiring diagram for R2S40-TP and V2S40-TP

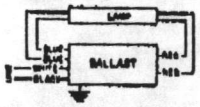

Wiring diagram for R140-TP and V140-TP

Typical Specifications for Energy Saving Rapid Start Lamp Ballasts (2-Lamp)

The Advance Transformer Co. Mark III Full Light Output Energy Saving Ballast catalog number _____. The ballast shall be CBM certified for full light output and have an average input wattage of 86 watts when operating two (2) F40T12 Rapid Start Fluorescent Lamps in ambients of 77°F. It shall not exceed 90°C operating temperature in a 73°C heat box. Tests shall be conducted at a minimum of 33°C over CBM and U/L testing procedures. Ballast shall be guaranteed not to overheat capacitor insulating oil beyond manufacturer's warranty limits.

Advance® Mark III Slimline Energy Saving Ballasts

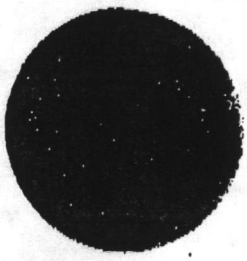

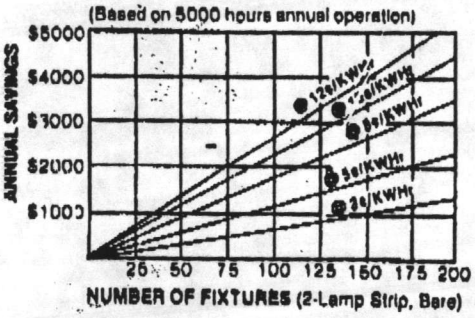

Annual Power Cost Savings

(ADVANCE Mark III Ballasts & 60W Energy Saving Lamps)

This chart shows the annual power cost dollars that can be saved by replacing standard lamps and standard ballasts with energy saving lamps and Mark III Ballasts—or by specifying the Mark III system for new installations in place of standard ballast/standard lamp combinations. Use your energy rate to determine your annual savings depending on the number of fixtures installed.

Full Light Energy Saving Ballasts 60Hz

Lamp Data: Description	Lamp Data: Watts	Circuit (Volts)	Min Starting Temp (°F)	Catalog Number (Class P)	Electrical Data: Line Current (Amps)	Electrical Data: Input (Watts)	Sound Rating	Dimensions (Inches): Length	Width	Height	Mounting	No. of Units Per Std Ctn	Wt Std Ctn (Lbs)
(2) F96T12 or (2) F96T12 Energy Savers (440 MA.; 60°F. Min.)	75 60	120 277	50°	R2E75-S-TP V2E75-S-TP	1.35 .60	158 (Std Lamps) 123 (F 8 Lamps)	C	11¾	3⁷/₆₄	1²⁹/₃₂	11⁹/₆₄	6	54

*Tests to ANSI C82.2 methods

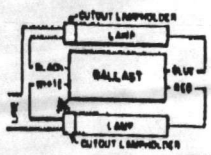

Wiring diagram for R2E75-S-TP

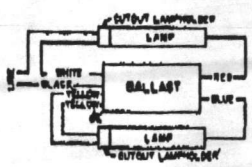

Wiring diagram for V2E75-S-TP

Typical Specifications for Energy Saving Slimline Lamp Ballasts

The Advance Transformer Co. Mark III Full Light Output Energy Saving Ballast catalog number _____. The ballast shall be CBM certified for full light output and have an average input wattage of 158 watts when operating two (2) F96T12 Instant Start Fluorescent Lamps in ambients of 77°F. It shall not exceed 90°C operating temperature in a 70°C heat box. Tests shall be conducted at a minimum of 30°C over CBM and U/L testing procedures. Ballast shall be guaranteed not to overheat capacitor insulating oil beyond manufacturer's warranty limits.

Note: Data and dimensions subject to change without notice.

©Advance Transformer Co. 1983

Form No. 1504 3/83

ADVANCE TRANSFORMER CO.

California Headquarters
for Energy Saving Ballasts
Advance Transformer Co.
6920 Aragon Circle • Buena Park, CA 90620
(213) 582-1162 • (714) 521-5100

Printed in U.S.A.

FEB 24 '87 14:51 HUBBELL LIGHTING-C'BURG. VA P.6/6

TAB PLACEMENT HERE

DESCRIPTION:

Section VI

☑ Tab page did not contain hand written information

☐ Tab page contained hand written information
*Scanned as next image

Confidential Records Management, Inc.
New Bern, NC
1-888-622-4425
9/08

PROJECT - APPLIED INSTRUCTION BUILDING

CONTRACT # - N62470-84-C-4087

LOCATION - CAMP JOHNSON
CAMP LEJEUNE, NC 28542

ELECTRICAL CONTRACTOR - BRYANT DURHAM ELECTRIC CO., INC.
DURHAM, NC

ELECTRICAL DISTRIBUTOR - MOORE ELECTRIC SUPPLY, INC.
RALEIGH, NC

SUBMITTAL FOR:

ITEM #	TYPE	MANUFACTURER	CATALOG #
1	"P"	Hubbell	PVL-0150S-118
2	"R"	"	PVL-0100S-118
3	"SA"	"	RCS400S-1P8-1
4	"SA" Arm	Shakespeare	MAA-10-1/Adapter RSD24
5	"SA" Pole	"	BH-35-99-BH-25-55
6	"SA" Wind load calculations		
7	"SA" Lamps 400 watt		

Item 1 & 2
Page 1 of 4
16530-1.4.1a
16530-2.1

PERIMALITER

6 to 1 Spacing to Mounting Height
⅓ Fewer Fixtures
Vandal-Resistant Polycarbonate Lens Assembly
Wall or Pole Mount

Type "P" & "R"

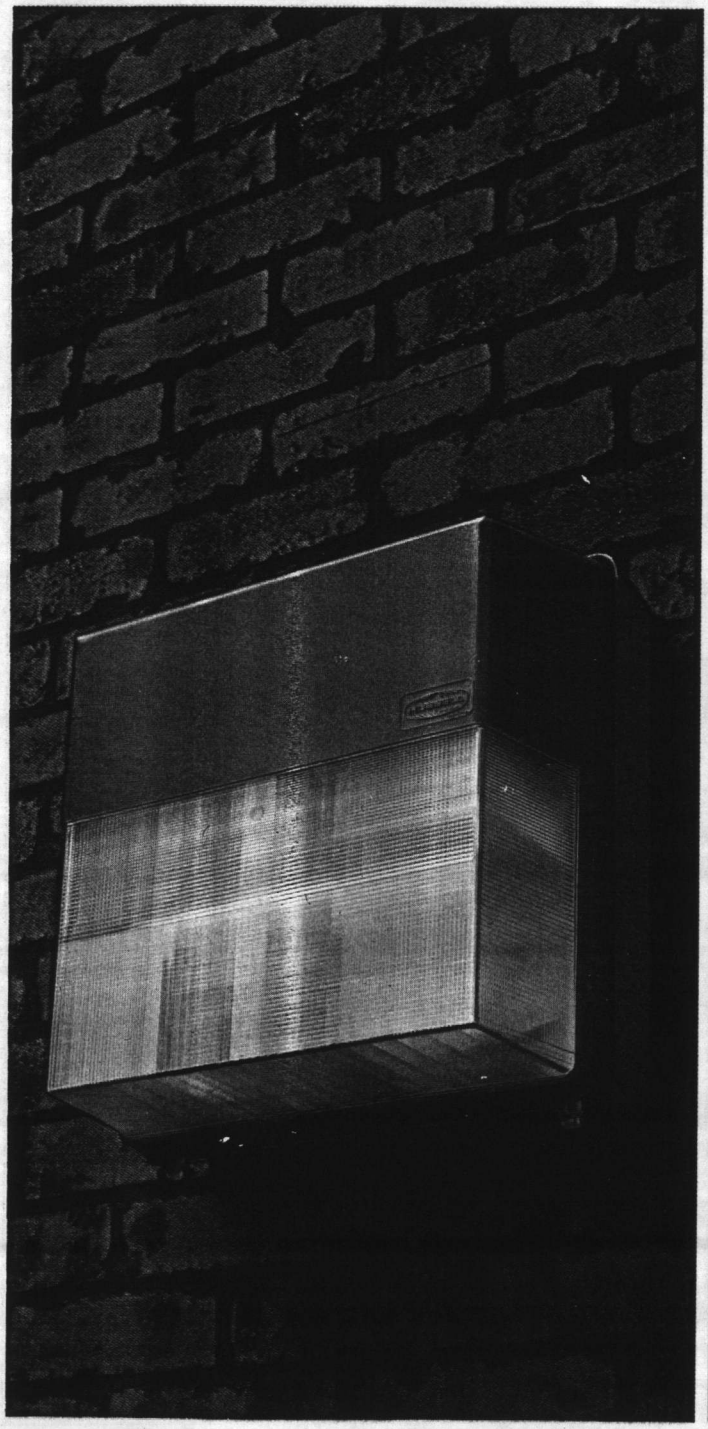

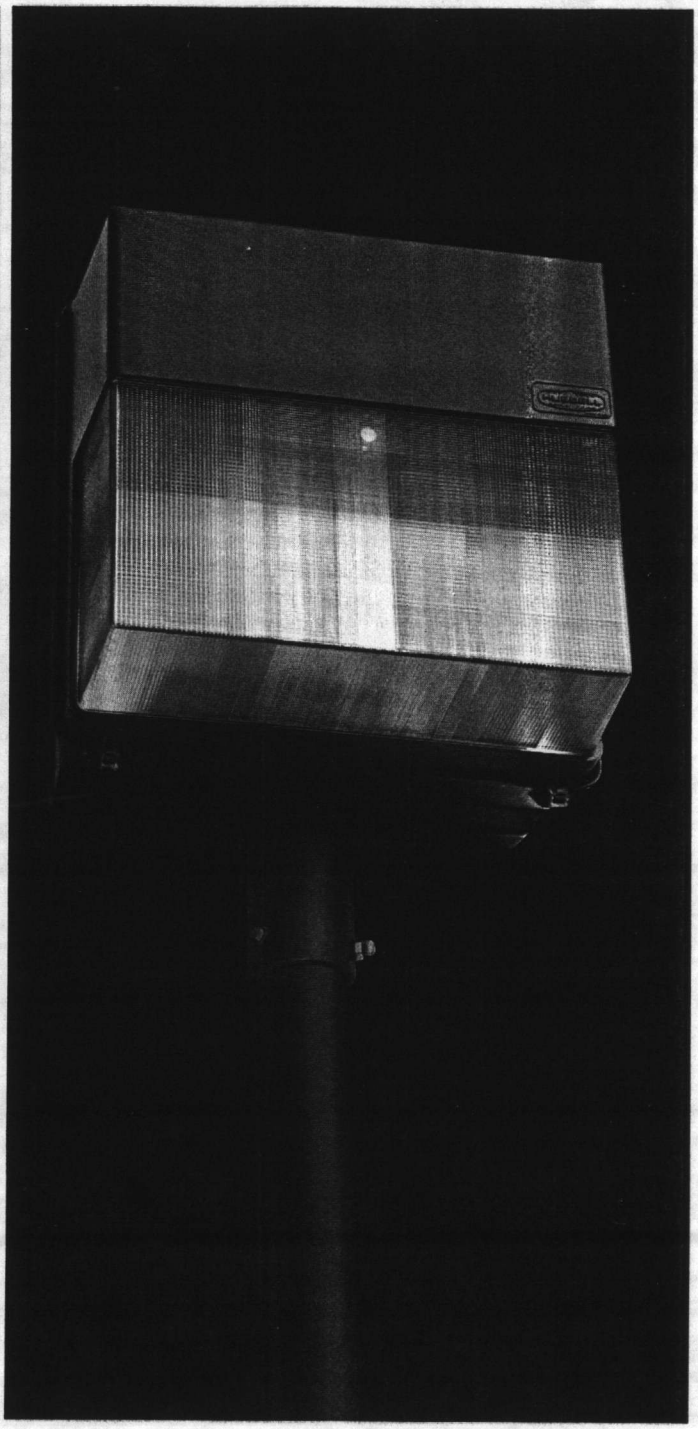

HUBBELL lighting division

PERIMALITER®

The energy-saving area lighter combining efficient lighting, vandal resistance and aesthetic appearance.

The growing demand for energy conservation has influenced luminaire designs to use energy-efficient lamps and provide maximum lighting performance. Hubbell Lighting's PERIMALITER® is a highly efficient area lighter designed for maximum spacing between luminaires, utilizing energy-efficient H.I.D. lamps. This luminaire can provide the same uniformity at a 6 to 1 spacing to mounting height ratio other wall lighters achieve at a 4 to 1 spacing to mounting height ratio.

Perimaliter is perfectly suited for safety and security applications, as well as commercial and industrial wall and area lighting for:

- parking lots
- office buildings
- banks
- schools
- shopping centers
- stores
- fast food restaurants
- warehouses
- parking garages

In short, it can be used to illuminate the outside perimeter of virtually any building. With its designed efficiency and performance, fewer Perimaliters are needed to light any given area, thereby reducing electrical cost and energy consumption.

Perimaliter's aesthetic appearance will complement any architectural setting, and its vandal-resistant construction is designed to last.

Specify Perimaliter for new installations or to Retrolite™ existing systems. You get solid Hubbell reliability, energy savings, contemporary design and vandal resistance.

Front Access Door. Removable, one-piece, injection molded polycarbonate door and prismatic lens hinges for servicing and full front access. The polycarbonate lens is ultraviolet and thermal stabilized, and coated with a unique ultraviolet absorbing material which dramatically improves the photometric performance and durability of this fixture. Interior door surface finished in bronze. Retained by two captive stainless steel screws to insure proper gasket sealing.

Rear Housing. One-piece, heavy-duty, die-cast aluminum for long life and cooler ballast operation.

Reflector. Anodal® finished high quality specular grade aluminum for optimum photometrics and maximum light transmission.

Ballast. Class "H" insulated – 20°F (– 40°F for HPS) starting, 60 Hz, high power factor ballast. Normal power factor reactor ballast available for HPS (50 Hz ballasts available). An aluminum ballast compartment cover isolates the electrical components from the optical assembly.

16530-2.1.2

Photocontrol Accessory. A button-type photocell can be field installed behind the prismatic window for photocontrol operation. The prismatic window does not allow light below 90° to activate photocontrol.

Pole Mounting Accessory. Aluminum slipfitter housing accepts 2⅜" O.D. tenon for field installation of single, or back to back double, post top mounted Perimaliters. Finished in bronze Lektrocote®

Additional Features. Finished in bronze Lektrocote. Two side entries provided for through conduit wiring if required. U.L. 1572 Listed, Suitable for Wet Locations.

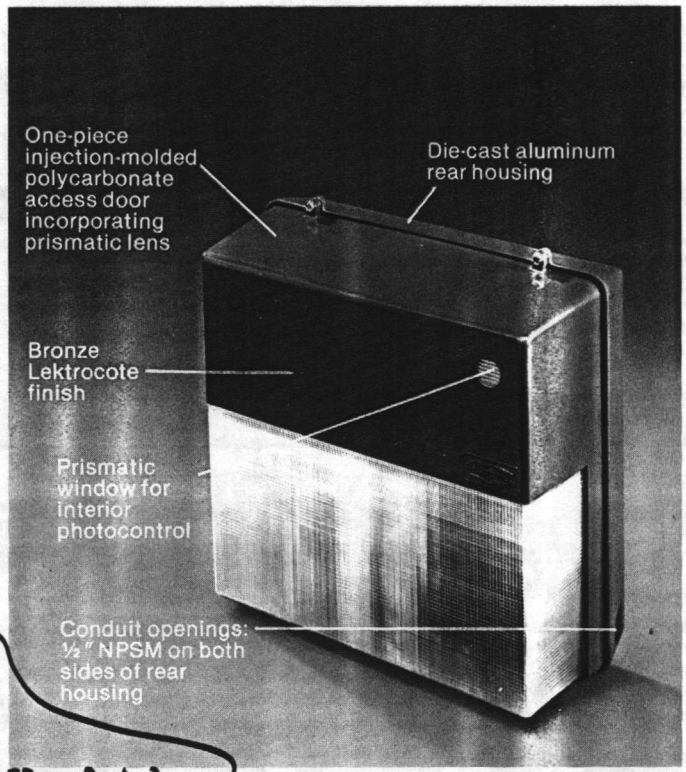

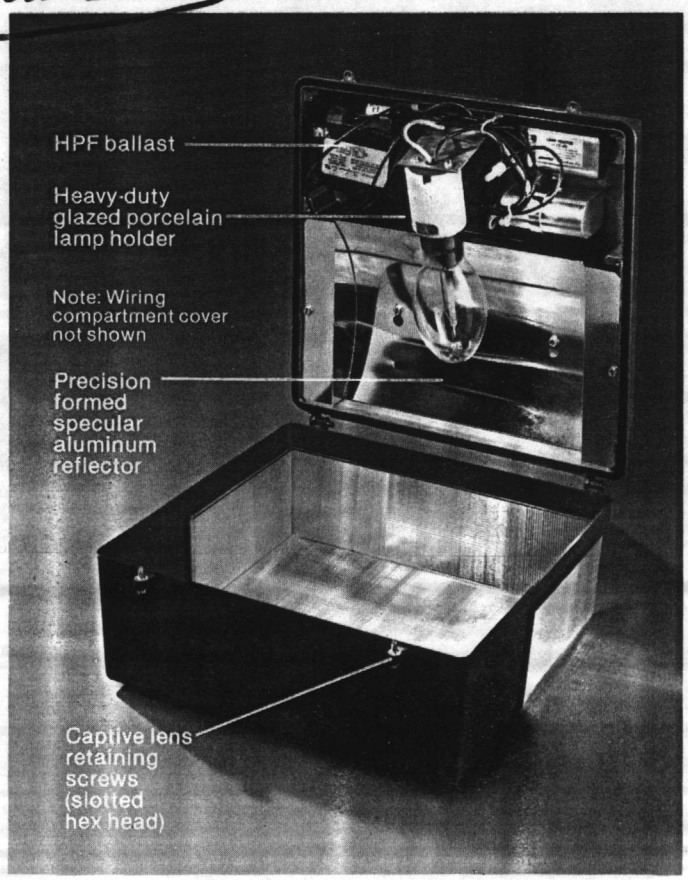

Ordering Information

Lamps and Wattage	Catalog Number	Ballast	Weight lbs.	Weight kgs.
HIGH PRESSURE SODIUM				
70	**PVL-0070S-118**	AL (HPF)	18	8
70	**PVL-0070S-511***	Reactor (NPF)	18	8
100	**PVL-0100S-118**	AL (HPF)	19	9
100	**PVL-0100S-511***	Reactor (NPF)	19	9
150**	**PVL-0150S-118**	AL (HPF)	20	9
150	**PVL-0150S-511***	Reactor (NPF)	20	9
150	**PVL-0150S-116▲**	Reactor	20	9
METAL HALIDE				
175	**PVL-0175H-118**	PLA	21	10
MERCURY VAPOR				
100	**PVL-0100C-118**	CWA	17	8
175	**PVL-0175C-118**	CWA	17	8

Note: All catalog numbers ending in 8 are Quad-Tap™ (120, 208, 240, 277 volt). Lamps not included.
* 120 Volt only. Lamps included.
** 150 Watt HPS available in 480 volt.
▲ 220/240 Volt 50 Hz. (70, 100 Watt HPS and 100, 125 Watt mercury also available—consult factory)

Accessories

For field installation with PVL Series. Order separately.

Catalog Number	Description
PBT-1	Photocontrol 120 volt*. (Wiring kit required).
PVL-PK	Wiring kit for field installation of photocontrol. (Photocontrol not included.)
PVL-PT	Aluminum slipfitter housing accepts 2⅜" O.D. tenon for field installation of single, or back to back double, post top mounted Perimaliters. (EPA: 1.8 sq. ft. with fixture[s]).

*Photocontrols are also available in 208, 240 and 277 volts.

Performance Criteria

Hubbell Recommended Spacings	Performance Rating	Hubbell Uniformity Ratio
4 MH	Excellent	3:1
6 MH	Good	6:1
8 MH	Acceptable	10:1

SUGGESTED SPECIFICATION

General

Luminaire shall be Hubbell Lighting Division Perimaliter Series, catalog number, PVL—_____ for use with a _____ watt _____lamp.

Mechanical

Back housing shall be one-piece, die-cast aluminum with internal heat sink design for cool ballast operation and long life. The housing shall have integrally cast hinge pins to mount the door. Housing shall be capable of being mounted directly over a standard 4" outlet box. Two ⅜" knockouts with an industry standard 10" spacing shall be provided for bolting the fixture to a wall or the pole mounting accessory.

Two ½" NSPM tapped and plugged conduit hubs shall be provided for surface conduit wiring. A cast-in channel shall be provided for surface conduit wiring. A cast-in channel shall also be provided to retain the extruded silicone gasket. The ballast housing shall be finished in bronze Lektrocote.

The front access door and prismatic lens shall be one-piece, vandal resistant injection-molded U.V. and thermal stabilized polycarbonate. The door shall have two hinges molded-in to mate with the rear housing hinge pins allowing full front access and removal of the door. The door shall be retained by two captive stainless steel screws to insure proper gasket sealing. The door shall have a prismatic window for optional photocontrol operation, allowing operation only by light from above the fixture. The door shall be finished on the inside with a bronze paint formulated to bond to the polycarbonate. The lens area shall receive a proprietary coating on both sides to eliminate the effects of U.V. and heat on color and transmission within normal periods of use.

An aluminum cover shall be provided to enclose the electrical components while the door is opened for relamping. A knockout shall be provided in this cover for field installation of the optional photocontrol. A wiring compartment and cover shall be provided for connection of the power supply.

The reflector shall be constructed from high quality specular grade aluminum with Anodal™ finish. The mogul-base lamp holder shall be of heavy-duty glazed porcelain and shall be tilted at 15° from vertical axis to provide optimum photometrics and maximum light transmission.

Photometric Performance

At a spacing to mounting height ratio of 6:1, the luminaire shall produce a uniformity ratio of 6:1 (average: minimum). At a spacing to mounting height ratio of 4:1, the luminaire shall produce a uniformity of 3:1 (average: minimum).

Electrical

The ballst shall be class "H" insulated, −20°F starting, (−40°F HPS), 60 Hz. high power factor type or normal power factor reactor type.

Dimensions and mounting details

Ease of installation:

- Wall mounting
  Loosen captive lens retaining screws, and reflector retaining screws. Remove reflector.

The two ⅜" K.O.'s with an industry standard 10" spacing are now accessible.

Perimaliter is designed for mounting directly over a 4" standard outlet box, and is also provided with ½" NPSM tapped and plugged hubs on both sides for surface conduit mounting.

- Pole Mounting
  Standard unit mounts directly to PVL-PT accessory for single, or double fixture mounting. Slipfit accessory to pole tenon.

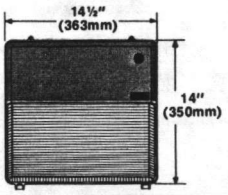

FRONT VIEW

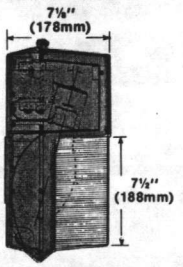

SIDE VIEW

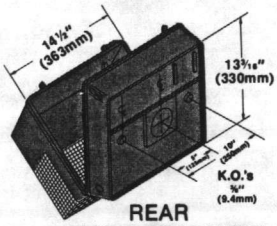

REAR MOUNTING VIEW

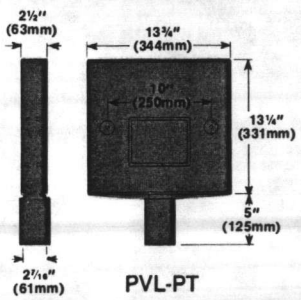

PVL-PT

16530-1.4.2 a
16530 - 2.1

Photometric data

Tested to current IES and NEMA standards under stabilized laboratory conditions.

Isofootcandle Diagrams—Based on 15-foot mounting height.

150 Watt High Pressure Sodium
Test No. HP-01146

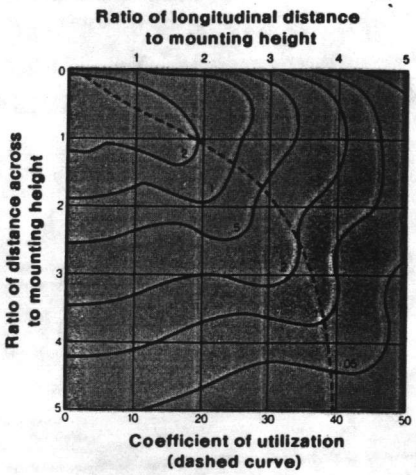

To determine footcandle values for 70 watt HPS and 100 watt HPS, multiply by .36 and .59 respectively.

175 Watt Metal Halide
Test No. HP-01149

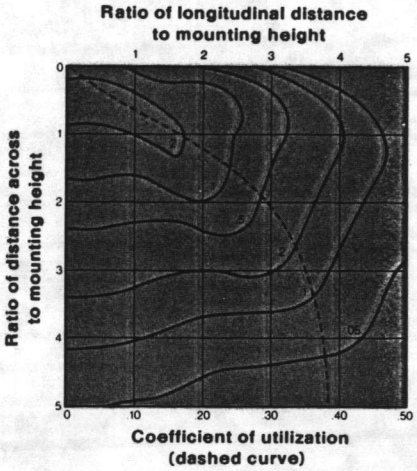

175 Watt Deluxe Mercury
Test No. HP-01148

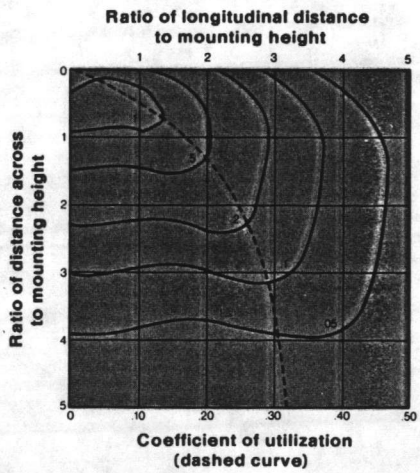

To determine footcandle values for 100 watt Mercury, multiply by .49.

Four Perimaliters can do the job of six ordinary wall lights!

Even at 6 MH spacings, the Perimaliter can provide performance similar to that achieved by other wall lighters at 4 MH spacings.

Example:
Perimaliter with 150 watt HPS @ 15′ MH can be spaced 90′ apart vs. 60′ spacing for other wall lights.

Result:
33% less energy required
33% lower fixture cost
33% lower operating cost
Improved lighting performance

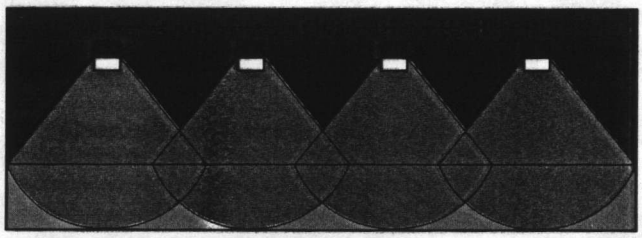

Four Perimaliters

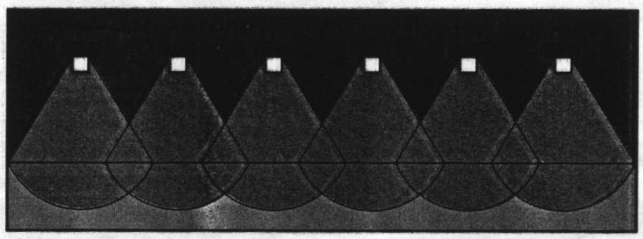

Six Ordinary Wall Lights

Footcandle Array Diagram

Mounting height conversion table

Mounting Height (ft.)	Factors
12	1.56
15	1.00
18	.69
20	.56
25	.36

Footcandle Array Based On:
- 15′ Mounting Height
- 6 To 1 Spacing To Mounting Height Ratio
- 3 Mounting Heights In Front Of Luminaire

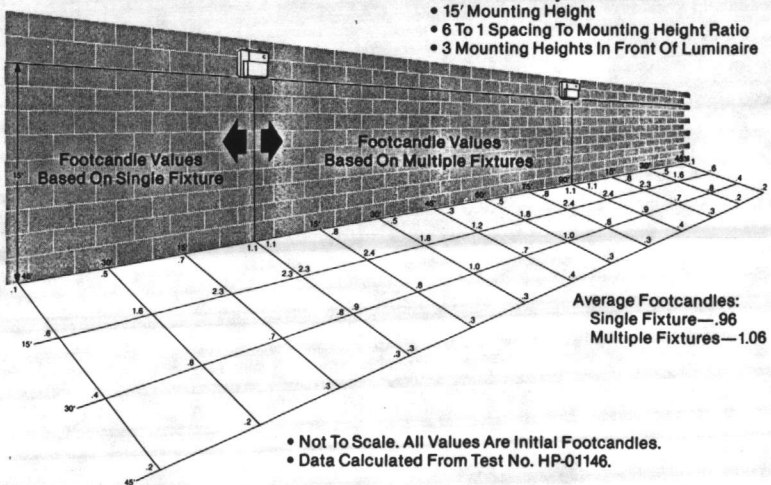

Average Footcandles:
Single Fixture—.96
Multiple Fixtures—1.06

- Not To Scale. All Values Are Initial Footcandles.
- Data Calculated From Test No. HP-01146.

HUBBELL lighting division

Christiansburg, Virginia 24073 • (703) 382-6111 • Telex: 82-9406
1212 N. Hubbell Way, Anaheim, California 92801 • (714) 995-1212 • Telex: 65-5440
Moultrie, Georgia 31768 • (912) 985-3719
Other facilities located in Africa, Canada, England, and Singapore.

April, 1985

© 1985 Harvey Hubbell Incorporated

Printed in U.S.A.

Item 344

Page 1 of 4
16530-1.4.1a
16530-2.1

MAGNUFORM II RCS/RCM/RCL

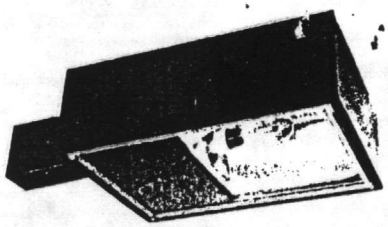

RCS/RCL OPTICS

ARCHITECTURAL AREA

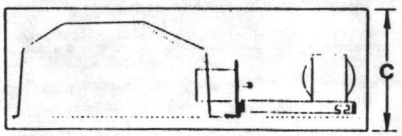

RCS/RCM/RCL

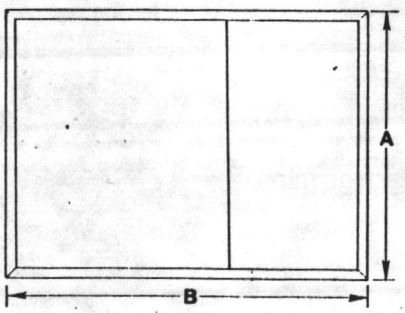

DIMENSIONAL DATA

	RCS	RCM	RCL
A	16¼" 413 mm	22½" 572 mm	22½" 572 mm
B	23¼" 591 mm	30¼" 768 mm	30¼" 768 mm
C	8" 203 mm	10" - 254 mm	10" 254 mm

The Magnuform® II Series offers an aesthetically-styled rectangular housing with sharp cutoff for a variety of distributions for any lighting application. With a wide range of optical assemblies and adjustable socket system, the RC Series is ideal for shoppig centers, parking areas, malls, commercial and industrial complexes, roadway, or any area where luminaire styling contributes to the visual environment.

Magnuform II offers two size housings. The small house (RCS) unit is available in 100-400 watt HPS and 175-400 MH. The second housing (RCM-RCL) has an identical exterior housing. RCM wattages range from 250-400W HPS and metal halide. RCL is available in 100W HPS and metal halide.

Housing — Lightweight, rugged, one-piece formed and welded Aluminum assures smooth construction and weatherproof integrity. Luminaire is pre-drilled for mounting to pole or wall.

Ballast — 180° C insulation, -20° F starting (-40° F. HPS), 60 Hz. HPF ballast. 50 Hz. ballast available - contact factory. MULTI-TAP (120,208,240,277V)

Powr-Panl® — All electrical components are mounted on a pre-galvanized steel plate which is held in place by spring loaded latches for easy installation and removal. Pre-wired with quick disconnect plugs.

Lens Door Frame — Extruded aluminum frame with rigid corner bracing and die-cast zinc latches to permit tool-less entry for servicing. The door has high quality silicone gasketing to seal against entry of insects, dirt and moisture. Decorative aluminum cover for concealment of electrical compartment.

Lens — Flat, tempered and impact resistant glass. Clear

Optical Assembly — RCS and RCL Series have a hydroformed, Anodal® finished aluminum reflector for I.E.S. Type II and III asymmetrical roadway distribution with efficiencies of up to 85%.

RCM — For wider distribution and better uniformity, RCM offers a Type II and III distribution featuring a one-piece anodized roadway reflector. A one-piece specular reflector is available in the Type V unit.

Socket — RCS/RCM units offer an adjustable Porcelain socket assembly which permits easy field adjustment to obtain desired distribution. See details below. RCL sockets are preset at the factory with Type II cutoff "G" or Type III cutoff "P" distribution.

Mounting — A complete section of mounting arms and adapters for most any mounting requirement is available. See page 55.

Lektrocote® Finish — Two mils minimum of electrostatically applied power coating, high temperature bonded to the surface for maximum adherence and finish hardness. Standard finishes are bronze, black, gray and white. See ordering information.

Additional Features — Fully gasketed for all weather operation. U.L. 1572 listed, suitable for wet location.

ORDERING INFORMATION

Catalog Number	Wattage	Std. Distribution (Type)††	Type II Short	Type II Medium	Type III Short	Type III Medium	Type V Square	EPA FT²	EPA M²	Weight lbs.	Weight kgs.
METAL HALIDE+											
RCS-0175H-1P8-1*	175	III	X	X	X	STD.	—	1.7	.16	26	11.8
RCS-0250H-1P8-1	250	III	X	X	X	STD.	—	1.7	.16	28	12.7
RCM-0250H-2P8-1	250	III	X	X	X	STD.	—	2.7	.25	46	20.7
RCM-0250H-2W8-1	250	V	—	—	—	—	STD.	2.7	.25	46	20.7
RCS-0400H-1P8-1**	400	III	X	X	X	STD.	—	1.7	.16	33	14.9
RCM-0400H-2P8-1	400	III	X	X	X	STD.	—	2.7	.25	51	23.1
RCM-0400H-2W8-1	400	V	—	—	—	—	STD.	2.7	.25	51	23.1
RCL-1000H-1X8-1***	1000	To Order	—	G	—	P	—	2.7	.25	58	26.3
HIGH PRESSURE SODIUM											
RCS-0100S-1P8-1	100	III	X	X	X	STD.	—	1.7	.16	25	11.3
RCS-0150S-1P8-1Δ	150	III	X	X	X	STD.	—	1.7	.16	28	12.7
RCS-0250S-1P8-1	250	III	X	X	X	STD.	—	1.7	.16	35	15.8
RCM-0250S-2P8-1	250	III	X	X	X	STD.	—	2.7	.25	51	23.1
RCM-0250S-2W8-1	250	V	—	—	—	—	STD.	2.7	.25	51	23.1
RCS-0400S-1P8-1	400	III	X	X	X	STD.	—	1.7	.16	42	18.9
RCM-0400S-2P8-1	400	III	X	X	X	STD.	—	2.7	.25	56	25.4
RCM-0400S-2W8-1	400	V	—	—	—	—	STD.	2.7	.25	56	25.4
RCL-1000S-1X8-1***	1000	To Order	—	G	—	P	—	2.7	.25	62	28.1

Luminaire finish is bronze; for alternate finish, replace final digit in the Catalog Number with black-2, gray-3, white-4. To specify 480V ballast, substitute A5 for the 8 in the Catalog Number, (50 Hz. 220/240V available - consult factory).

+Mercury vapor lamps may be operated on metal halide ballast.

*Must use Universal burning lamp.

**Shipped w/lamp.

***For appropriate distribution, replace X with G-Type II medium, P-Type III medium.

ΔMust use ANSI 55 volt lamp.

††Type I distribution available; consult factory.

HUBBELL lighting division IM

Item #4

MOUNTING ARMS, ADAPTERS AND TENON FITTERS

RCS/RCM/RCL/RCJ/RCT

Arms and adapters are extruded or cast aluminum, designed for clean appearance and rigid assembly, simple and easy to mount, Hubbell's arm assemblies can mount in virtually any position. Standard bronze Lektrocote® finish. To specify an alternative finish, add the appropriate suffix number: black-2, gray-3, white-4.

ARMS

Catalog Number	Description	EPA		Weight	
		ft²	m²	lbs.	kgs.
MAA-4-1	4" arm for flat surface	.2	.02	3.3	1.5
MAA-10-1	10" arm for flat surface	.5	.05	5.8	2.6
MAA-K-1	Bolt-on knuckle fitter	—	—	5	2.3
MAA-KF-1	Knuckle fitter for flat surfaces	.5	.05	5.8	2.6

ADAPTERS

Catalog Number	Description	Weight	
		lbs.	kgs.
ROUND POLE ADAPTER			
RSD-24-1	4" O.D. pole adapter for use with above arms	1.5	.7
RSD-25-1	5" O.D. pole adapter for use with above arms	1.5	.7
MAA-WP-1	Wall plate for flat surfaces	1.8	1.2
EXISTING POLE TENON MOUNT (2⅜" - 2⅞" O.D.)			
RSD-1-1	For above arms - one fixture (must order RSD-24)	16	7.2
RSD-2180-1	For above arms - two fixtures 180° (must order RSD-24 for each luminaire)	17	7.7
RSD-3120-1	For RSD-10 arms only - three fixtures max. 120° (must order RDS-24 for each luminaire)	19	8.6
RSD-90-1	For RSD-10 arms only - four fixtures max. 90° (must order RSD-24 for each luminaire)	20	9.1

SPECIALTY BRACKETS

Catalog Number	Description	EPA		Weight	
		ft²	m²	lbs.	kgs.
MAA-211-1	Twin parallel mount - 30" on center/4" arms	2.0	.2	37	16.7
MAA-B3	Single 3 ft. arm	.8	.1	26	11.7
MAA-BT3	Double 3 ft. arm at 180°	1.5	.1	37	16.7
RSD-K1-1	Spoke bracket for mounting one luminaire	.3	.03	7	3.1
RSD-K2-1	Spoke bracket for mounting two luminaires at 180°	.6	.06	10	4.5
RSD-K3-1	Spoke bracket for mounting three luminaires at 120°	.9	.09	13	5.9
RSD-K4-1	Spoke bracket for mounting four luminaires at 90°	1.2	.12	16	7.2

POLE TOP TENONS

Available for the square straight steel pole series, the SSP-T4/5/6 allows easy conversion of standard poles to tenon top. All units are made of heavy duty steel and comes with all mounting hardware.

Catalog Number	Description	Weight	
		lbs.	kgs.
SSP-T4	Tenon top adapter for 4" square pole.	17.5	5.6
SSP-T5	Tenon top adapter for 5" square pole.	14.5	6.5
SSP-T6	Tenon top adapter for 6" square pole.	16.5	7.4

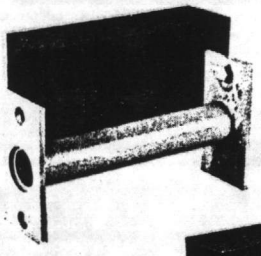
MAA-10-1

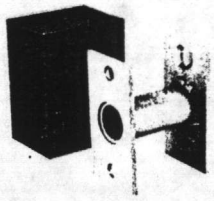
MAA-4-1

MAA-K

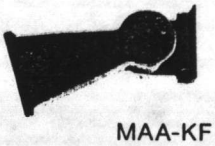
MAA-KF

ARCHITECTURAL AREA

RSD-24/25

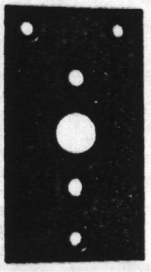
MAA-WP

RSD-1-1

MAA-211-1

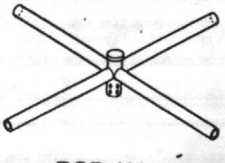
RSD-K4-1

SSP-T4/5/6

HUBBELL lighting division ™

OPTIONS

The following factory installed options are available for the Magnuform II Series.

Suffix	Description
— F(X)	Fusing
— PC(X)	Button Type Photocontrol (120V-277V), Twist-Lock (480V)

For current fusing and photocontrol replace (X) with: 1-120V, 2-208V, 3-240V 4-277V, 5-480V.

ACCESSORIES

The following accessories for field installation on the MagnuForm II luminaire. They must be ordered separately.

Catalog Number	Description	Weight	
		lbs.	kgs.
RCS-HS	House side shield for RCS luminaire.	1	.5
RCM-HS	House side shield for RCM/RCL luminaire.	1	.5
RCS-SPC	Polycarbonate shield for RCS luminaire.	3	1.4
RCM-SPC	Polycarbonate shield for RCM/RCL luminaire.	4	1.8

RCS/RCM STOCK UNIT

For easy installation and distributor stocking of the Magnuform Series, Hubbell has designed the RC Powr-Panl System. This allows the stocking of non-ballasted housings and Quad-Tap ballasts. Each housing has an adjustable socket for distribution flexibility. All housing finishes are bronze; for other finishes, contact factory.

RCS/RCM NON-BALLASTED HOUSINGS ORDERING INFORMATION

Catalog Number	Description	POWR-PANL
RCS-0P0-1	Small Housing	100-400 HPS, 175-400 MH
RCM-0P0-1	Medium Housing	250-400 HPS, 250-400 MH

ORDERING INFORMATION

Catalog Number (HPS)	Wattage	Voltage	Catalog Number (MH)	Wattage	Voltage
RCS-0100S-108	100	Quad	RCS-0175H-108	175	Quad
RCS-0150S-108	150	Quad	RCS-0250H-108	250	Quad
RCS-0250S-108	250	Quad	RCS-0400H-108	400	Quad
RCS-0400S-108	400	Quad	RCM-0250H-108	250	Quad
RCM-0250S-108	250	Quad	RCM-0400H-108	400	Quad
RCM-0400S-108	400	Quad			

CATALOG LOGIC

R C M-400 S-2 P 8-1-F1

Shape
R-Rectangular

Series
C-Cutoff

Housing Style
S-Small
M-Medium
L-Large (Same as M with 1000W Socket Assembly)

Wattage

Small		Medium	
MH	HPS	MH	HPS
175	100	250	250
250	150	400	400
400	250		
	400		

Large

MH	HPS
1000	1000

Source
H-Metal Halide
S-High Pressure Sodium

Reflector Type
1-RCS, RCL
2-RCM

Beam Distribution
G-Type II Medium*
P-Type III Medium*
W-Type V Square
(Available on RCM Housing Only)
*Distribution Types are std. but field adjustable for other distributions. See ordering information for details.

Voltage
5-480 Volt
8-Quad Tap (120V, 208V, 240V, 277V)

Lektrocote Finish
1-Bronze
2-Black
3-Gray
4-White

Options
F-Fusing (F1-1200, F2-208V, F3-240V, F4-277V, F5-480V)
PC-Button Type Photocontrol (120-277V). Twist Lock for 480V. Specify voltage.

For mounting arms and brackets, see page 55.

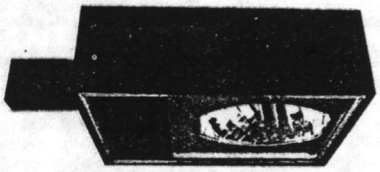

RCM OPTICS

ARCHITECTURAL AREA

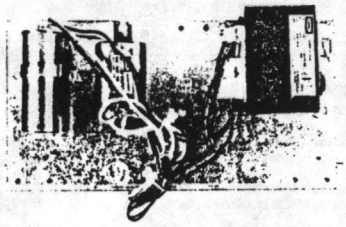

POWR-PANL

16530-1, 4, 12
16530-2, 1

HUBBELL lighting division IM