M430 tkru M450

INDEX

1- WATTS BACK FLOW PREVENTER

2- DUNHAM BUSH CONDENSATE PUMP

3- ARMSTRONG HOT & CHILLED WATER PUMPS

4- ARMSTRONG EXPANSION TANKS

5- ARMSTRONG AIR CONTROL DEVICES

6- ARMSTRONG AIR SEPARATOR

7- ARMSTRONG HEAT EXCHANGER

8- JJ FINNIGAN HOT WATER HEATERS

9- FLEX HOSE FLEX PUMP CONNECTORS

10- HOLBY TEMPERING VALVE

11- JJ FINNIGAN FLASH TANK

12- SARCO PRESSURE REDUCING VALVES

13- ZOELLER SUMP PUMPS

14- MCQUAY FAN COIL UNITS

15- MCQUAY UNIT HEATERS

16- MCQUAY AIR HANDLING UNITS

17- MCQUAY CHILLERS

18- BROAN BATHROOM FANS

19- SUNROC DRINKING FOUNTAINS

20- GREENHECK EXHAUST FANS

21- CONTROL SYSTEM FOR MECHANICAL BLDG.

22- CONTROL SYSTEMS FOR BARRACKS

ITEM 1

WATTS BACK FLOW PREVENTER

Supplied by: Morgan & Kirkman Associates, INC.
P.O. Box 172
Fayetville, N.C. 28302
PH: 919-484-5796

Parts can be furnished by
above supplier.

Installed by: Ramsey Air Conditioning, Inc.
P.O. Box 1333
Jacksonville, N.C. 28540
PH: 919-455-0414

WATTS REGULATOR

THE NAME THAT PROTECTS *YOUR* NAME

Series 909

SIZES ¾" to 10"

REDUCED PRESSURE PRINCIPLE BACKFLOW PREVENTERS

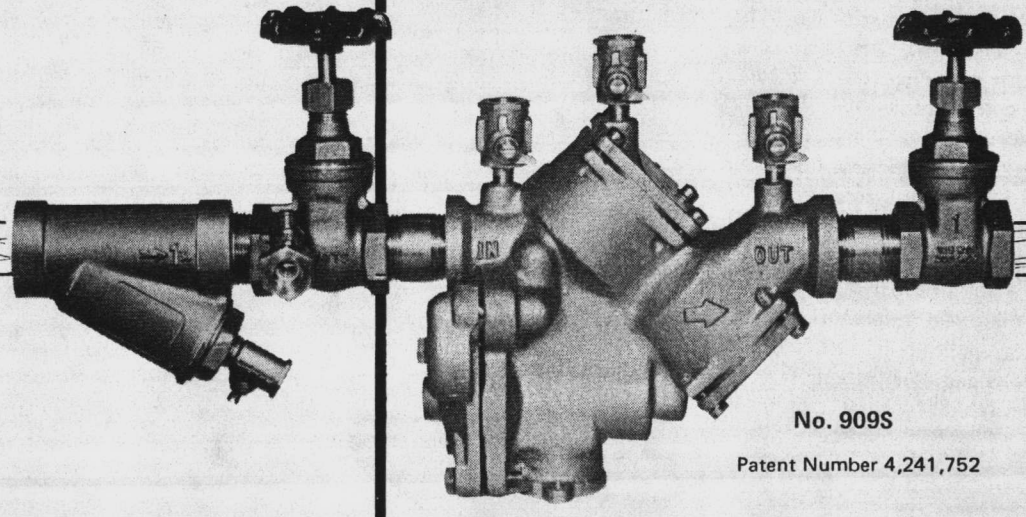

No. 909S

Patent Number 4,241,752

POSITIVE CROSS CONNECTION CONTROL

- *INSTALLATION*
- *SERVICE*
- *REPLACEMENT PARTS*
- *and MAINTENANCE*

For Field Testing Procedure request Bulletin S-FT-TK-9A.

WATTS REGULATOR COMPANY • LAWRENCE, MASS., U.S.A. 01842

TORONTO, CANADA SOESTDUINEN, THE NETHERLANDS

Manufacturers of the largest and most complete line of plumbing and heating safety valves and controls.

Basic Installation Instructions

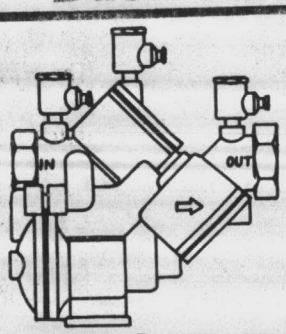

WATTS
No. U909LF
¾" - 2"

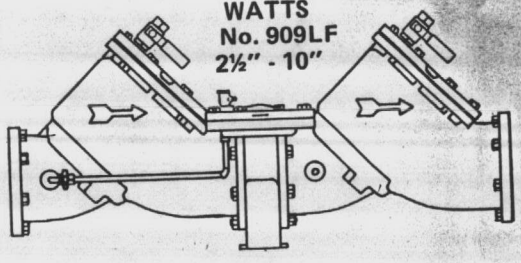

WATTS
No. 909LF
2½" - 10"

A. WATTS Series 909 Backflow Preventers may be installed in either a vertical or horizontal position. If installed vertically, the direction of flow must be up for ¾" - 2" and down for 2½" - 10".

B. They should always be installed in a accessible location to facilitate testing and servicing. Check the local codes to insure that the unit is installed the proper height above the ground.

C. Pipe lines should be thoroughly flushed to remove foreign material before installing the unit. A strainer should be installed as shown, ahead of No. 909 Series devices to protect the discs from unnecessary fouling.

CAUTION: Do not install with strainer when backflow preventer is used on seldom-used water lines which are called upon only during emergencies, such as fire sprinkler lines, etc.

D. Water discharge from the relief valve should be vented in accordance with code requirements. The relief valve should never be solidly piped into a drainage ditch, sewer, or sump. The discharge pipe should be terminated approximately 12" above the ground or through an air gap piped to a floor drain.

E. After initial installation, a discharge from the relief valve opening may occur until all seating surfaces have become seated or due to inadequate initial flushing of pipe lines to eliminate dirt and pipe compounds. If flushing will not clear, remove the first check valve and clean thoroughly. See page 4 or 6.

F. When a reduced pressure principle backflow preventer is installed for dead-end service applications, such as for boiler feed lines, cooling tower make-up and other periodic flow requirements, such a backflow preventer cannot function according to its designed purpose and tested performance without causing discharge from the relief vent when the water supply pressure fluctuates during static no flow conditions.

Therefore, to avoid discharge where objectionable, use a check valve ahead of the installation to "lock-in" the downstream pressure so as not to affect the operation pressure differential between the supply and downstream of the first check in the backflow preventer.

G. Backflow preventers should never be placed in pits unless absolutely necessary and then only when and as approved by local codes. In such cases, provision should be made to always vent above flood level or for a pit drain to insure an adequate air gap below the relief port. Consult your local or state plumbing or health inspector.

H. It is important that Series 909 Backflow Preventers be inspected periodically for any discharge from the relief valve which will provide a visual indication of need for cleaning or repair of check valves. Also, testing for proper operation of the device should be made periodically in compliance with local codes, but at least once a year or more often, depending upon system conditions. See Watts instruction manual for test procedures.

I. Relief vent will discharge water, when during no-flow periods (1) the first check valve is fouled, or (2) the inlet supply pressure to the device drops sufficiently due to upstream pressure fluctuations to affect the required operating differential between the inlet pressure and the reduced pressure zone. Otherwise such relief ("spitting") can occur when the second check is fouled during emergency backflow or resulting from a water hammer condition. (See tag on valve for preventive and corrective means.)

Installation - Indoors, Figure 1

For indoor installations, it is important that the device be easily accessible to facilitate testing and servicing. Series 909 may be installed either vertically or horizontally. If installed vertically, flow must be up ¾" - 2" and down 2½" - 10". If it is located in a line close to a wall, be sure the test cocks are easily accessible. A drain line should be piped from the relief valve as shown, where evidence of discharge will be clearly visible and so that water damage will not occur. Therefore, never install in concealed locations. In sizes 2½" - 10", the complete relief valve unit can be removed and mounted on the opposite side of the device, in order to provide better accessibility for servicing.

INDOORS, MAIN LINE

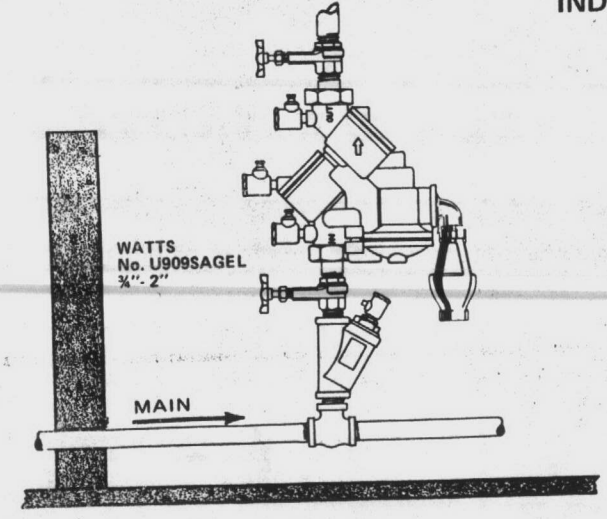

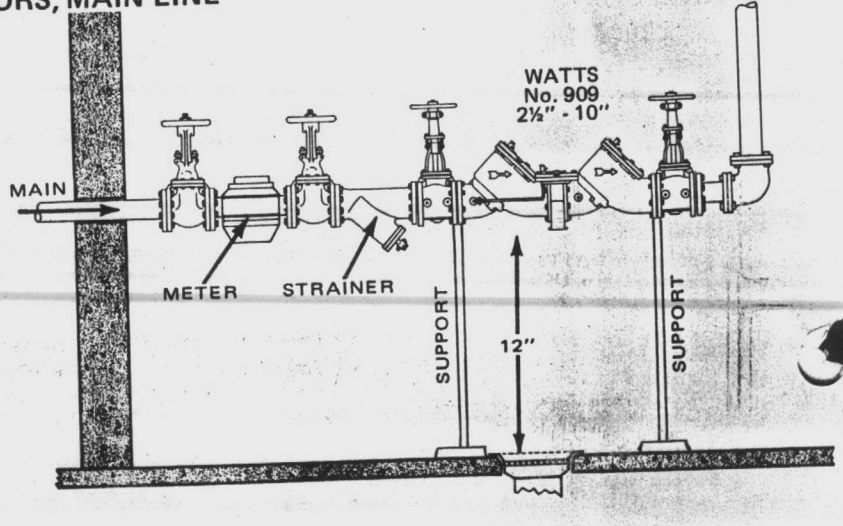

Installation - Outside Building Above Ground, Figure 2

In an area where freezing conditions do **not** occur, Series 909 can be installed outside of a building. The most satisfactory installation is above ground and should be installed in this manner whenever possible.

In an area where freezing conditions **can** occur, Series 909 should be installed in a properly insulated utility building or shelter.

Series 909 may be installed in a vertical or horizontal line and in an accessible location to facilitate testing and servicing. A discharge line should be piped from the relief valve connection making sure that there is adequate drainage. Never pipe the discharge line directly into a drainage ditch, sewer, or sump. Series 909 should never be installed where any part of the unit could become submerged in standing water. Consideration should be given to the installation of external support structure as applicable on larger sizes.

It is generally recommended that backflow preventers never be placed in pits unless absolutely necessary and then only when approved by local codes. In such cases, a modified pit installation is preferred.

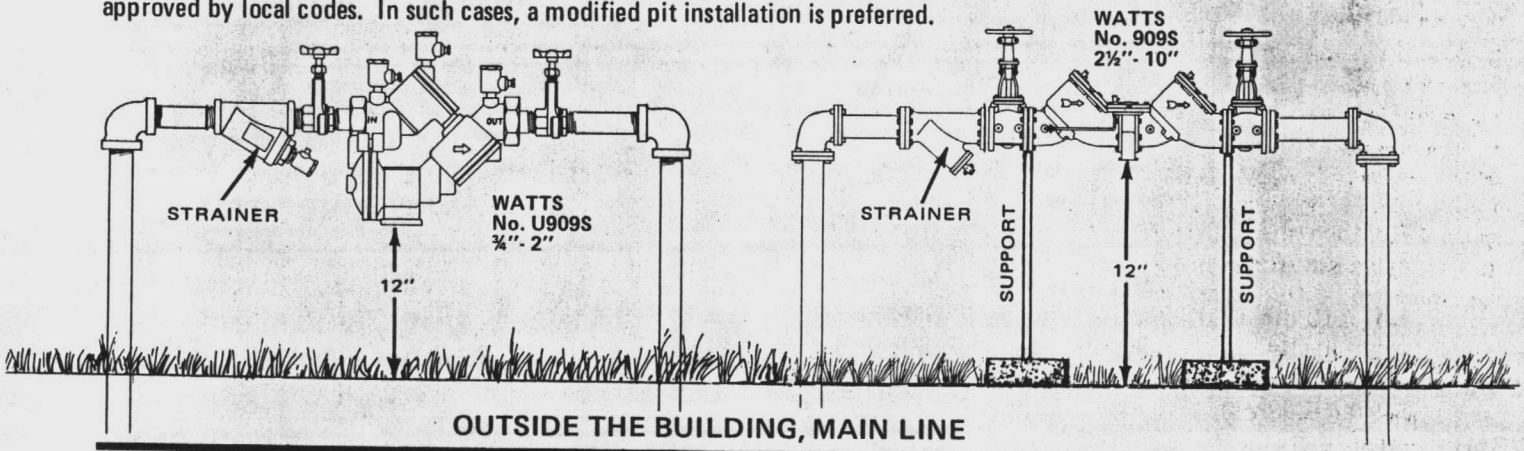

OUTSIDE THE BUILDING, MAIN LINE

Installation - Parallel Devices Figure 3

CONSULT LOCAL CODES FOR APPROVAL

An optional installation of Series 909 Backflow Preventers is the use of two or more smaller size devices piped in parallel (where approved) to serve a larger supply pipe main. This type of installation is employed whenever it is vital to maintain a continuous supply of water and where interruptions for testing and servicing would be unacceptable. It also has the advantage of providing increased capacity where needed beyond that provided by a single valve and permits testing or servicing of an individual valve without shutting down the complete line.

For a two-valve installation as shown, the total capacity of the devices should equal or exceed that required by the system. Table One listing the size No. 909 devices required to meet a certain capacity.

The number of devices used in parallel should be determined by the engineer's judgement based on the operating conditions of a specific installation.

TABLE ONE – CAPACITY REQUIRED FOR SYSTEM

50 GPM	100 GPM	150 GPM	200 GPM	250 GPM	350 GPM	450 GPM	640 GPM	1000 GPM	2000 GPM	3000 GPM	5000 GPM
Two ¾" Devices	Two 1" Devices	Two 1¼" Devices	Two 1½" Device	Two 1½" Devices	Two 2" Devices	Two 2½" Devices	Two 3" Devices	Two 4" Devices	Two 6" Devices	Two 8" Devices	Two 10" Devices

Table shows total capacity provided with dual valve installations of various sizes.

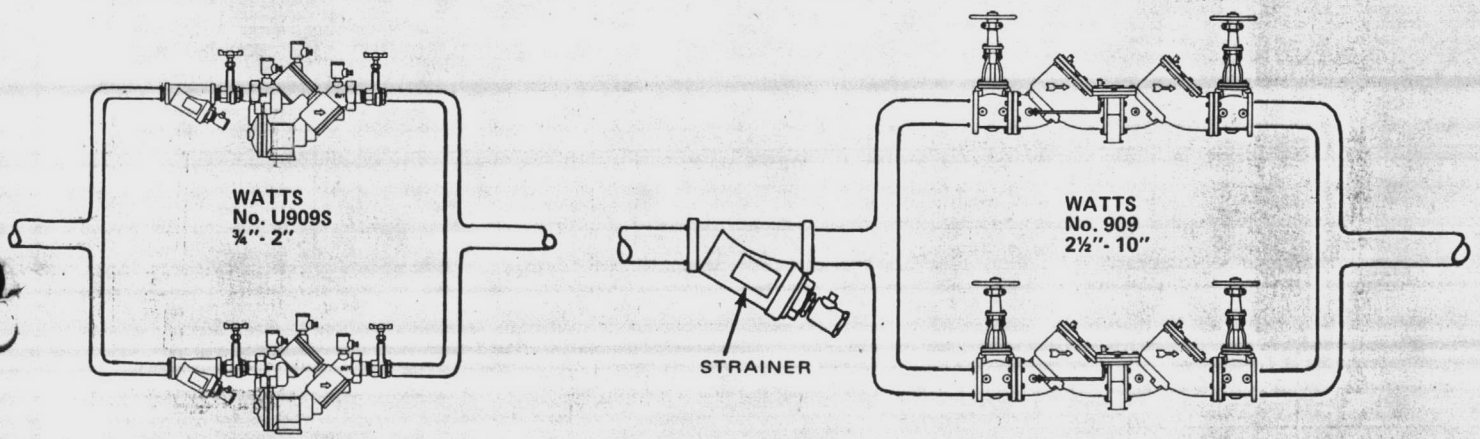

Servicing First and Second Check Valves

Sizes: ¾" to 2"

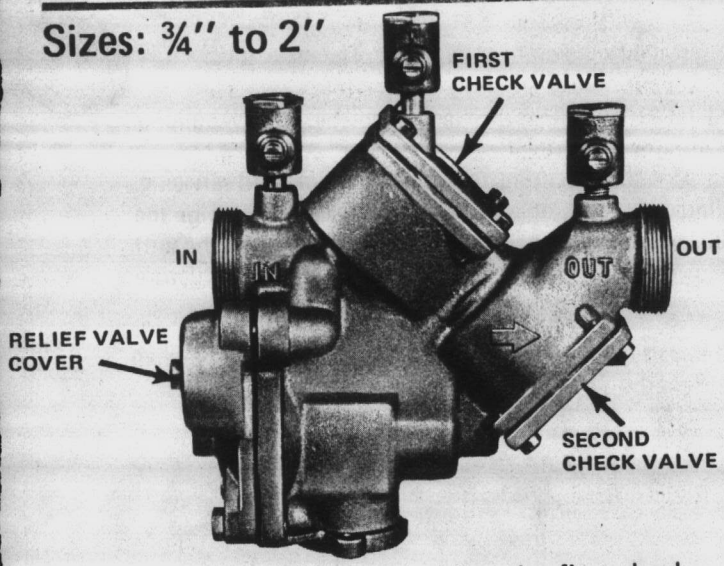

1. Remove the four screws holding the first check valve cover. Figure 2.
2. Lift off the first check valve cover. The check valve inside will come out with the cover and is attached with a bayonet type locking arrangement. Figure 3.
3. Holding the check valve module in both hands, rotate the assembly ¼ turn. This will disengage the disc assembly, spring and seat cover into individual components. Figure 4.
4. The disc assembly may be cleaned and reassembled, or depending upon its condition, it may be discarded and replaced with a new assembly from the service kit. "O" rings should be cleaned or replaced as necessary and lightly greased with the FDA approved silicon grease which is also furnished with the service kit.
5. Reassemble the check valve module in the reverse order. Service is identical for both the first and second check valves.

Figure 2

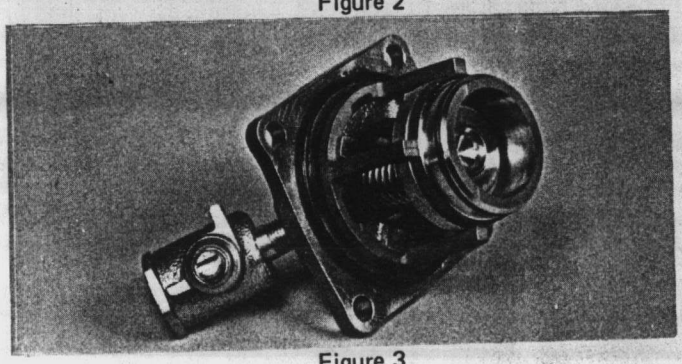

Figure 3

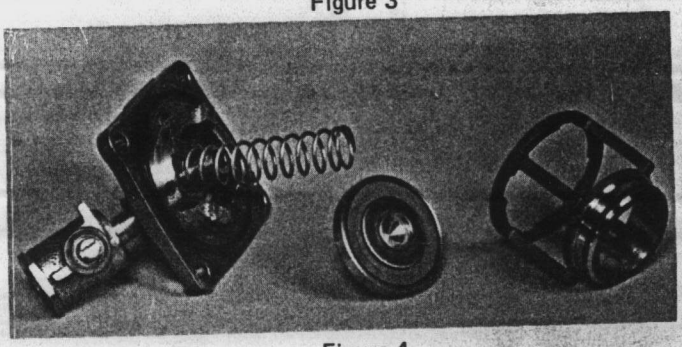

Figure 4

Note: The springs and covers of the first and second check valves are not interchangeable.

¾" - 2" Replacement Parts

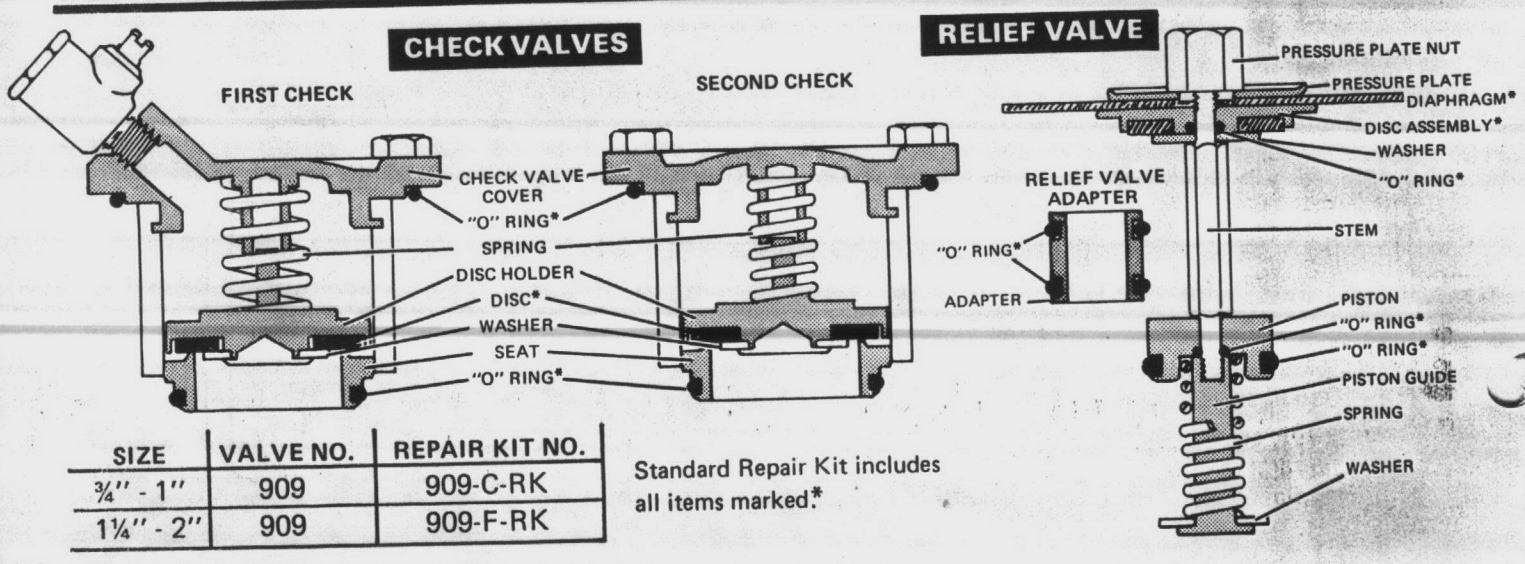

SIZE	VALVE NO.	REPAIR KIT NO.
¾" - 1"	909	909-C-RK
1¼" - 2"	909	909-F-RK

Standard Repair Kit includes all items marked.*

Servicing the Relief Valve

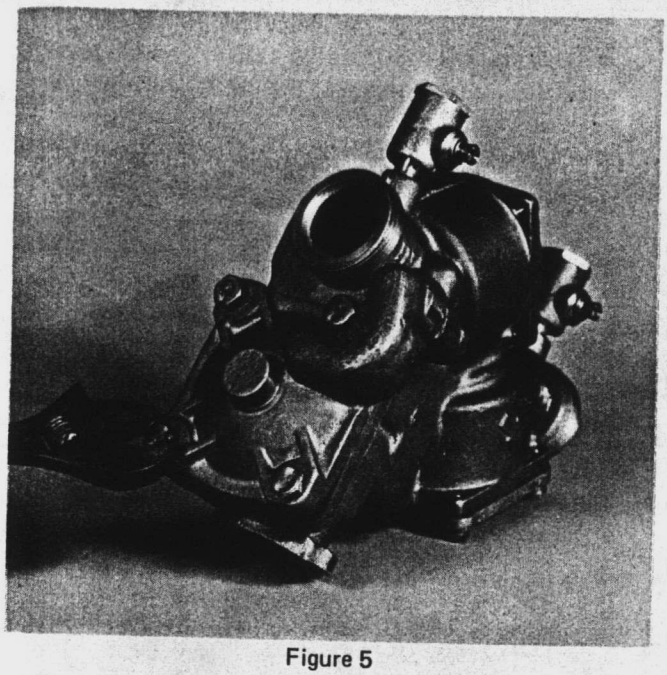

Figure 5

1. Remove the four bolts that hold the relief valve cover in place. Figure 5.
2. Remove the cover. The stainless steel adapter, with "O" rings attached, will be free to be removed simultaneous with the removal of the cover. Figure 6. Pull out the relief valve assembly. Figure 6. Note: the spring tension in the relief valve assembly is contained in the design of the relief valve; therefore, the relief valve can be removed in a one-piece spool-type assembly. Figure 7.
3. The relief valve seat and disc may be cleaned without disassembly of the relief valve assembly. If it is determined that the relief valve diaphragm and or disc should be replaced, the relief valve module can be readily disassembled without the use of special tools.
4. To disassemble the relief valve module, (Figure 7) hold the center hexagonal stem with an open end or an adjustable wrench (Figure 8). While simultaneously turning the hex head on the end of the relief valve assembly. The relief valve spring will unload during disassembly. Repeat procedure turning hex nut on the diaphragm end. Figure 9 shows complete disassembly of module.
5. The relief valve diaphragm and or relief valve disc may be replaced with new parts from the service kit. Reassembly of the relief valve module may be accomplished in the reverse order. "O" rings should be replaced as necessary and lightly greased with FDA approved silicon grease which is furnished with the service kit. Care should be taken to insure that, when bolting the relief valve into place, the relief valve module and stainless steel adapter are in position. Do not force the cover into place as damage may result from misalignment.

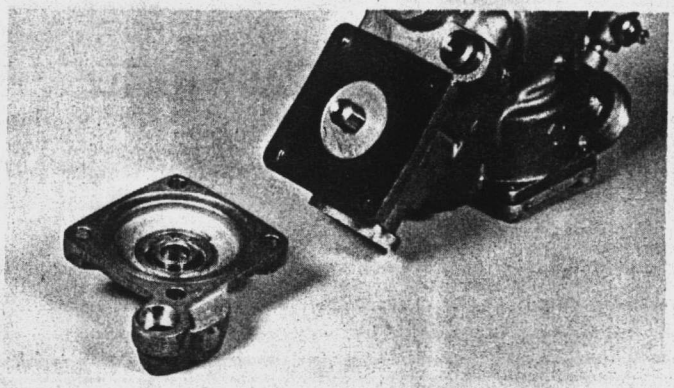

Figure 6

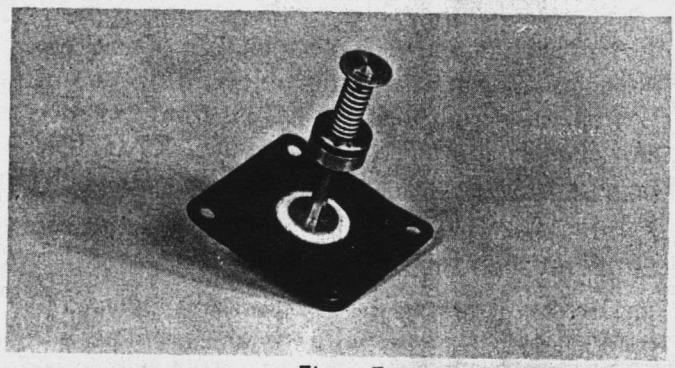

Figure 7

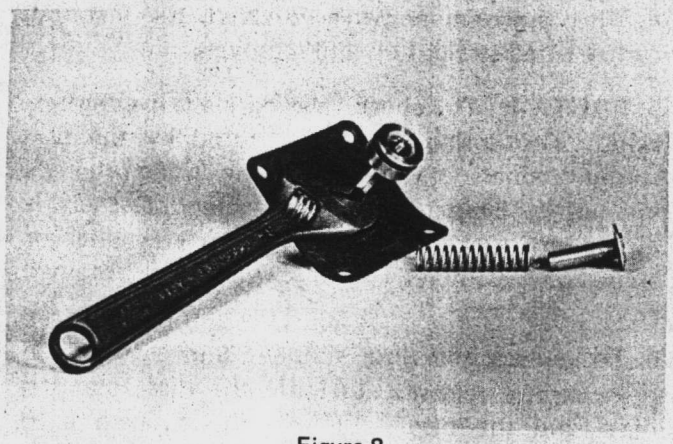

Figure 8

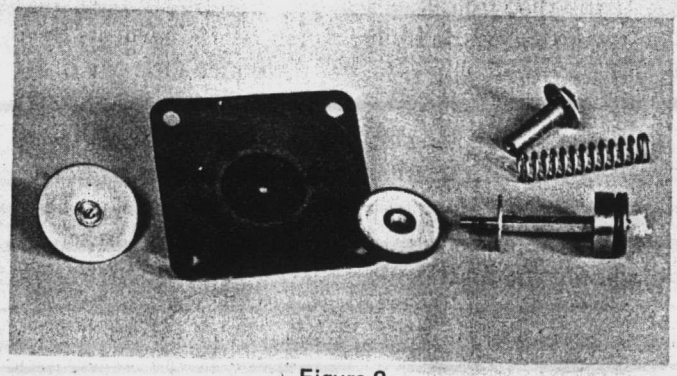

Figure 9

Servicing First and Second Checks

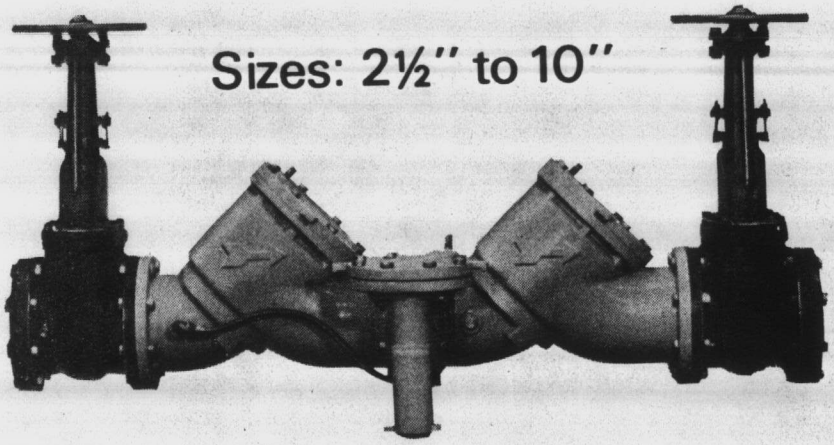

First and Second Checks are not Interchangeable.

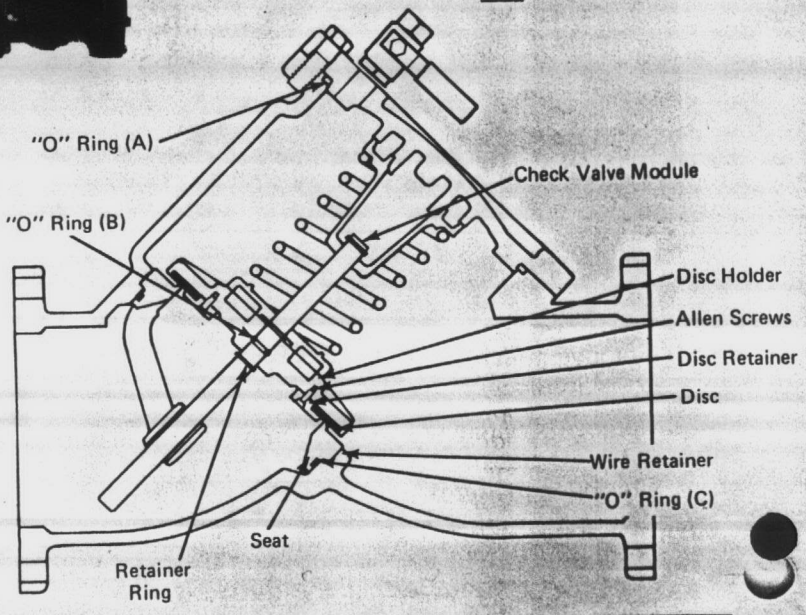

1. Remove hatch cover bolts. NOTE: The 909 is designed so that when the bolts are backed off ½", all the spring load is released from the cover and retained by the check module. **CAUTION:** Be sure to verify this before removing all the bolts.

2. Lift check valve module straight out taking care not to hit and damage seat ring.

3. The seat ring may be removed and replaced by pulling out the two wire retainers. The wire retainers are 10" long. One is drawn out clockwise and the other is drawn out counter clockwise.

4. With the retainer wires removed, the seat ring can be lifted straight up and removed.

5. CAUTION: The check valve spring is in compression. The spring load is captured by the two spring retainers and the stem. The spring retainers are **not** to be removed for servicing. If there is a need to replace the spring, spring retainer or stem, an assembled module must be obtained from the factory.

6. To replace the disc, simply remove the Allen head socket screws. Lift off the disc retaining plate and the disc. Reverse this procedure to install the new disc.

7. If the disc holder has been damaged by freezing or severe water hammer, it can be replaced in the field. Remove the retaining ring and slide the disc holder off the stem. Remove the "O" ring from the stem and replace with a new one. Apply grease to the "O" ring and slide the new disc holder into place. Re-install the retaining ring. NOTE: the disc holder should not be removed when servicing only the disc.

CHECK MODULE ASSEMBLY

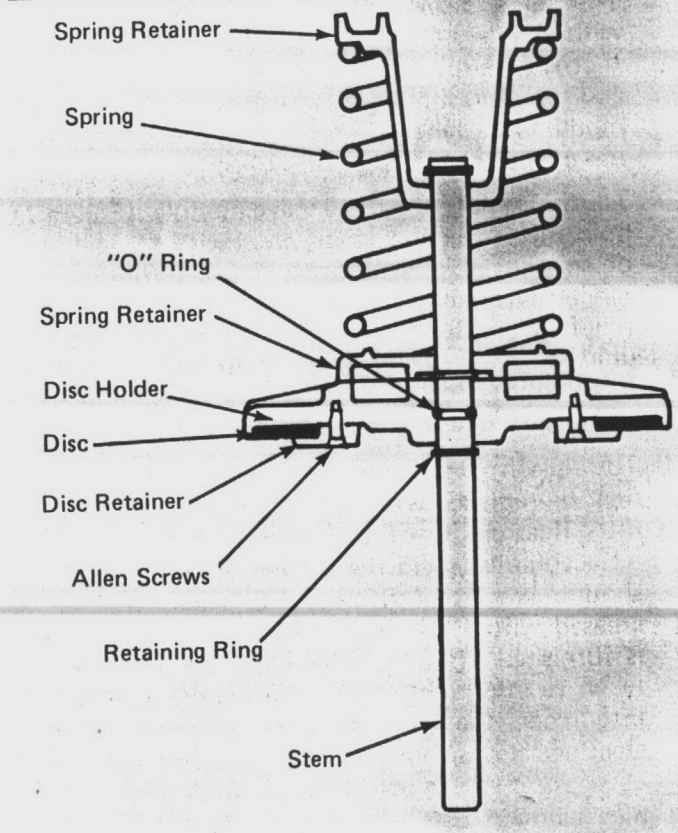

Servicing the Relief Valve

1. Remove the relief valve cover bolts. Note the 909 is designed so that when the bolts are backed off ½" all the relief valve spring load is retained by the bottom plug spring module. **Caution:** Be sure to verify this before removing all the bolts.

2. Remove the cover and diaphragm. The relief valve piston assembly can be lifted straight up and out.

3. Replace the wiper seal and piston "O" ring and apply grease to the "O" ring.

4. To replace the relief valve disc, hold the upper guide fin and unscrew the diaphragm pressure plate. It may be necessary to lightly tap the cast webs and the pressure plate to loosen. Replace with a new disc holder assembly and "O" ring. Note: the disc rubber is molded into the disc holder and is supplied as a disc holder assembly.

5. Removal of the bottom spring assembly. During normal field service there is no need to remove the bottom plug spring assembly other than inspection. It can be removed by simply unscrewing with a large pipe wrench.

Caution: The spring as retained on the bottom plug is highly loaded. **NO** attempt should be made in the field to remove the spring. For replacement, a complete bottom plug assembly must be obtained from the factory.

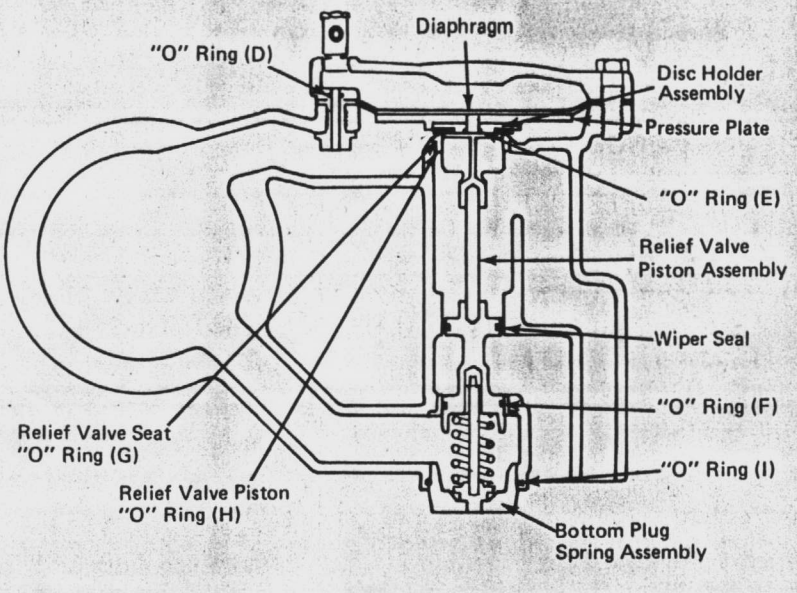

RELIEF VALVE PISTON ASSEMBLY

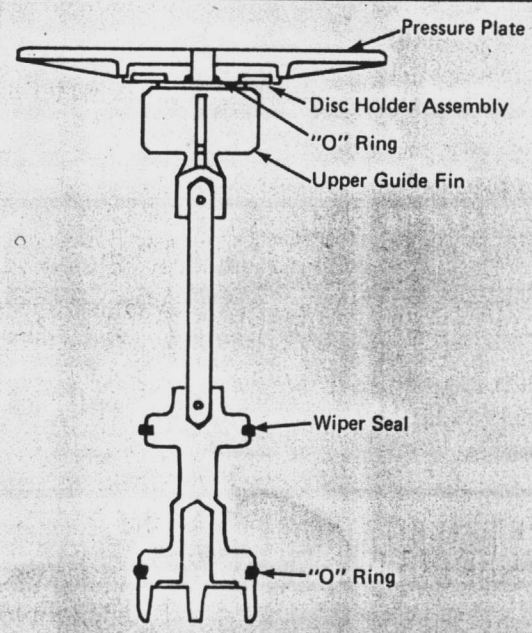

BOTTOM PLUG SPRING ASSEMBLY

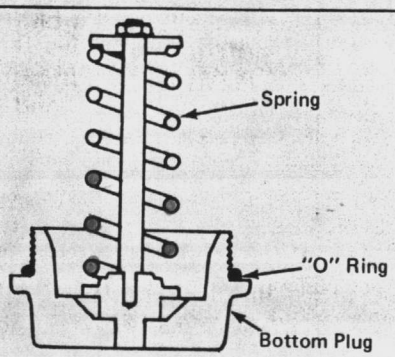

2½"-10" Replacement Parts

SERVICE PARTS KIT NUMBERS

Valve Size	Check Modules	Relief Valve
2½", 3"	909-G-RK	909-H-RK
4"	909-J-RK	909-JK-RK
6"	909-K-RK	909-JK-RK
8"	909-L-RK	909-M-RK
10"	909-N-RK	909-M-RK

CHECK MODULE KIT CONTAINS

(2) "O" Rings (A)
(2) Disc

RELIEF VALVE KIT CONTAINS

Set of "O" Rings (D), (E), (F)
Diaphragm
Disc Holder Assembly
Wiper Seal

ITEM 2

DUNHAM BUSH CONDENSATE PUMP

Supplied by: Morgan & Kirkman Associates, Inc.
P.O. Box 172
Fayetville, N.C. 28302
PH: (919) 484-5796

Parts can be furnished by
above supplier.

Installed by: Ramsey Air Conditioning, Inc.
P.O. Box 1333
Jacksonville, N.C. 28540
PH: (919) 455-0414

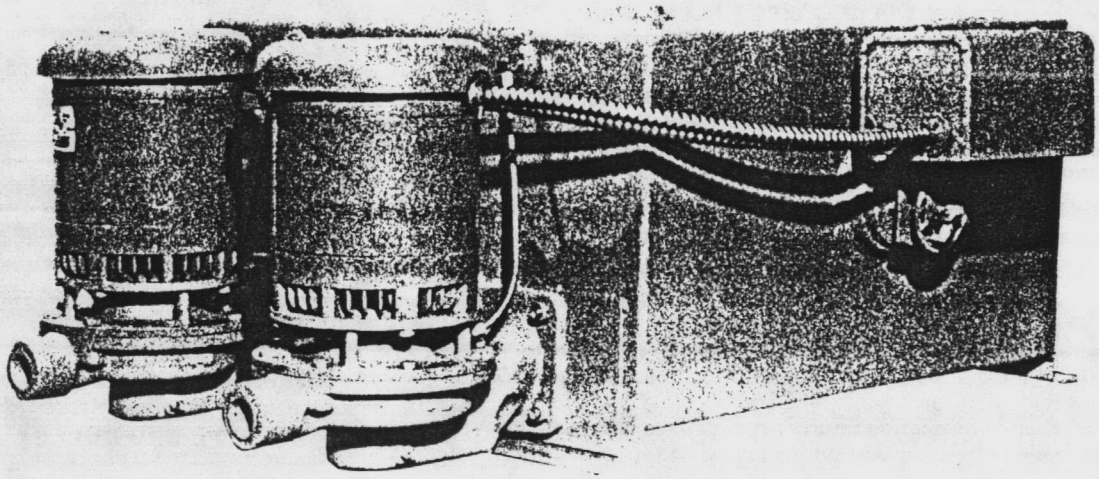

DUNHAM-BUSH

CONDENSATE PUMPS

TYPE CRV

Installation, Operation and Repair Parts Manual

CONDENSATE PUMPS
TYPE CRV

INTRODUCTION

The Dunham-Bush Type **CRV** Condensation Pump is a complete, compact assembly for removal of condensation, and automatic positive return of water to low pressure boilers from gravity heating systems, low pressure steam process equipment or from combinations of both types of loads.

The Duplex pump employs, as standard equipment, a mechanical alternator which provides automatic standby service whereby if one pump is inoperative, the second pump starts automatically. It also provides for automatic alternation on each cycle of float control.

These pumps have been thoroughly tested at the factory, are substantially crated for protection in shipment and are ready for operation after piping and wiring connections are made. Proper installation insures dependable operation without detailed attention over a long period of time.

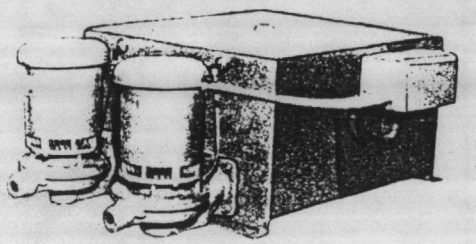

TYPE CRV DUPLEX

INSTRUCTIONS

1. **UNCRATING**—After uncrating pump, leave all instructions attached to the pump and temporary plugs in their tappings until installed on foundation and ready to connect to piping.
2. **SETTING**—Place the pump on a solid concrete foundation extending from 3 to 6 inches above floor with 4 foundation bolts 1½" above foundation. Shim the pump up level at tank feet, grout thoroughly with cement and tighten foundation bolts after cement has hardened.

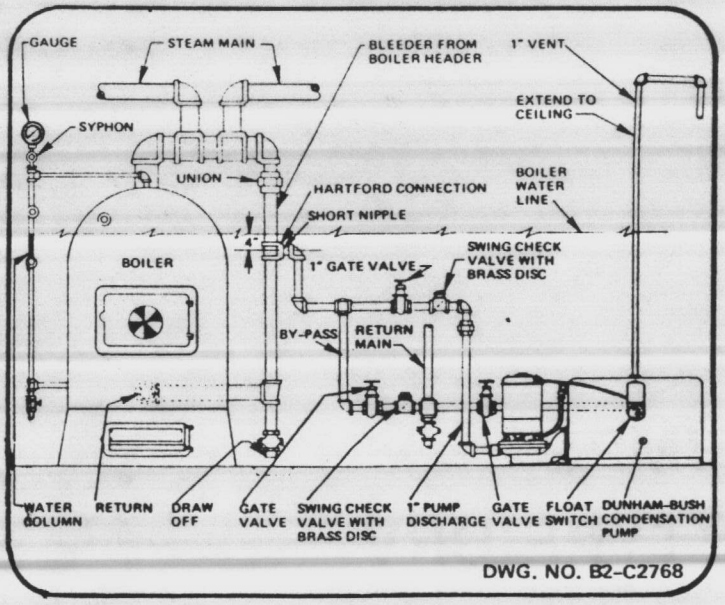

FIGURE 1 – **TYPICAL CONNECTIONS - TYPE CRV PUMP**

3. **PIPING CONNECTIONS**—Should be made as shown by Figure 1. All piping must be properly supported by hangers and not supported by the pump. Also make proper allowance for expansion of piping.
4. **RETURN MAINS**—Must be installed in such manner that condensate flows by gravity into the Receiver tank of the Condensation Pump.
5. **DISCHARGE TO BOILER**—Must be made through a check valve and gate valve. Hartford connection as shown is recommended by the Hartford Steam Boiler and Insurance Company, Hartford, Connecticut, and by the ASHRAE. The use of this connection for protection of the boiler is optional.

   All swing check valves must be tested for tightness before installation.
6. **AIR VENT FROM RECEIVER**—Should be made from the vent tapping, extending this pipe to the ceiling and terminating over an open drain.
7. **WIRING INSTRUCTIONS** – Pumps with single-phase motors are shipped with the wires from float switch disconnected and taped at the motor terminals. Make the proper connections at the motor terminals in accordance with the voltage of the current supply to be used. Select the proper wiring diagram from Page 3 and wire accordingly.

   Pumps with three-phase motors are shipped with the motors wired for the current supply voltage specified by the customer. Check the connections at the motor terminals to make sure that they conform to voltage of the current supply to be used. Select the proper wiring diagram from Page 4 and wire accordingly.

   All wiring must be in accordance with local regulations.

SPECIFICATIONS SUBJECT TO CHANGE WITHOUT NOTICE

PRELIMINARY OPERATION

Before placing the pump in service, operate the system for a period of time (preferably two weeks) wasting the condensate to sewer through draw-off so as to remove dirt, grease, scale and other foreign matter. When discharging condensate to sewer, supply make-up water to boiler to maintain proper water line.

We recommend that an automatic water feeder be installed on all installations equipped with manually operated coal, oil or gas-fired boilers. A low water cut-out of fuel supply should be installed on all installations equipped with automatically operated stoker, oil or gas-fired boilers.

TRIAL OPERATION

FOR TRIAL OPERATION OF PUMP, PROCEED AS FOLLOWS:

1. Remove plug on rear of motor and with large bladed screwdriver rotate shaft to be sure pump is free.
2. Fill the Receiver tank with water sufficiently high to close the float switch.
3. Open gate valve in discharge to boiler.
4. Do not operate pump without water in the receiving tank as the pump is equipped with a mechanical shaft seal. Operating the pump dry may ruin the seal.
5. Place the starting switch in "ON" position. If pump is operated on 3-phase current, see that motor rotates in direction indicated by arrow on pump and if rotating in wrong direction, interchange any two wires at the starting switch. Direction of rotation on single-phase units is fixed and cannot be changed.
6. The pump will discharge water from the Receiving Tank into the boiler stopping automatically when water in Receiving Tank reaches a low level.

OPERATING POINTS

IF PUMP DOES NOT PERFORM AS OUTLINED, CHECK THE FOLLOWING:

1. Check the motor speed. If motor speed is low and unit is operated on single phase current, check wiring connections to motor. If wired for 230 volt current but actually operating on 115 volt current, the motor will never come up to proper speed, and motor may burn out.
2. If condensate fills tank so rapidly that float switch cuts in too frequently, this may be due to: (1) a leaking check valve in the discharge line to the boiler, or (2) a priming boiler that should be cleaned. To check for a priming boiler, pull open the safety valve when the boiler is carrying a few pounds steam pressure. If clean, "white" steam comes out, boiler water is satisfactory. If dirty water is discharged from the safety valve, the boiler should be blown off to remove the oil and sludge.
3. Check to see that boiler pressure is not in excess of that for which the pump is built.
4. Lack of capacity may indicate that passageways of pump impeller have become clogged with foreign matter.
5. If pump is operated on 3 phase current, see that motor rotates in direction indicated by arrow on pump and if rotating in wrong direction, interchange any two wires at the starting switch. Direction of rotation on single phase units is fixed and cannot be changed.
6. If the pump fails to start, it may be due to the float ball having lost its buoyancy. This can be checked by operating the float head lever manually. If the float ball is not buoyant, replace with new float ball.
7. If after long service, water flows from around the motor shaft out through the space between the pump head motor flange and the pump head case flange, it is an indication of a mechanical seal failure and the complete mechanical shaft seal should be replaced. Replacement seals may be obtained from Dunham-Bush, Inc.

LUBRICATION – Motor(s) provided with grease cups or fittings, lubricate every 6 months with a good grade of medium weight sodium base cup grease.

Motor(s) not provided with grease fittings have bearings greased for life by motor manufacturer.

PARTS—In ordering parts, give type, size and serial number shown on the pump nameplate. Address all correspondence to Dunham-Bush, Inc., 811 E. Main Street, Marshalltown, Iowa 50158.

WIRING DIAGRAMS

SINGLE UNIT
SINGLE PHASE A. C. CURRENT

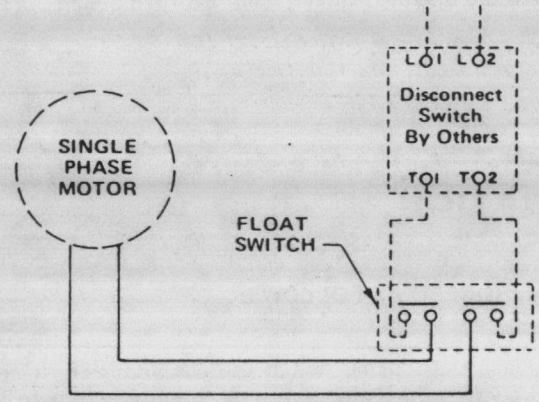

SINGLE UNIT
THREE PHASE A. C. CURRENT

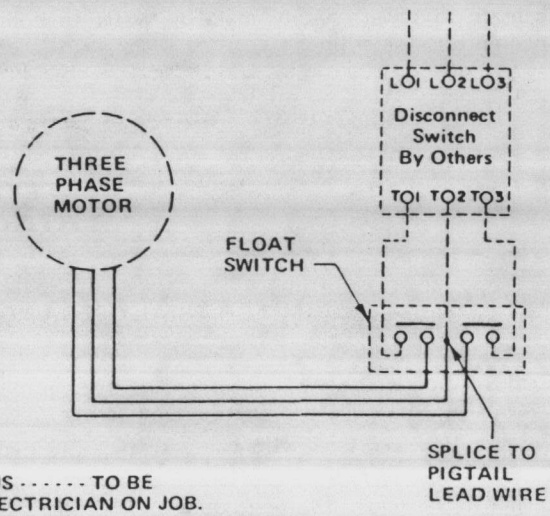

NOTE: LINES SHOWN THUS - - - - - - TO BE INSTALLED BY ELECTRICIAN ON JOB.

DUPLEX UNIT
SINGLE PHASE A. C. CURRENT

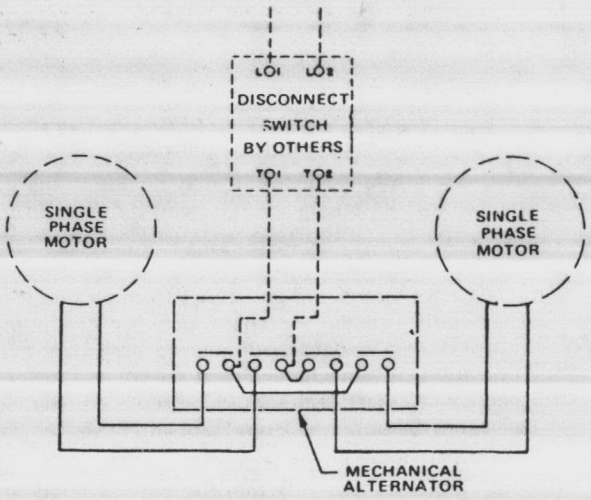

DUPLEX UNIT
THREE PHASE A. C. CURRENT

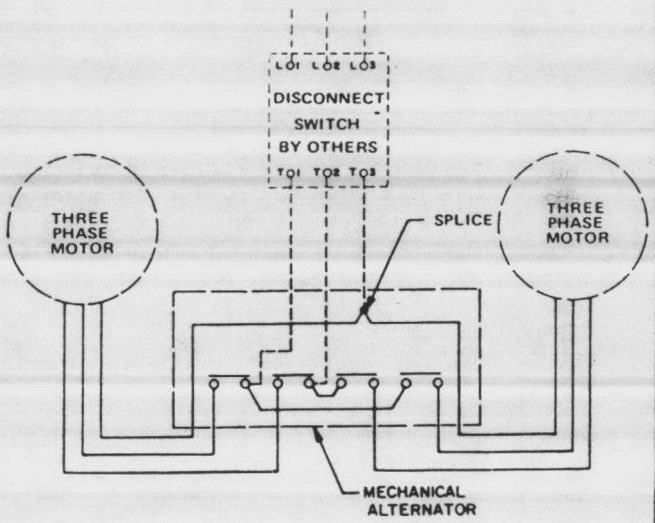

NOTE: LINES SHOWN THUS - - - - - - TO BE INSTALLED BY ELECTRICIAN ON JOB.

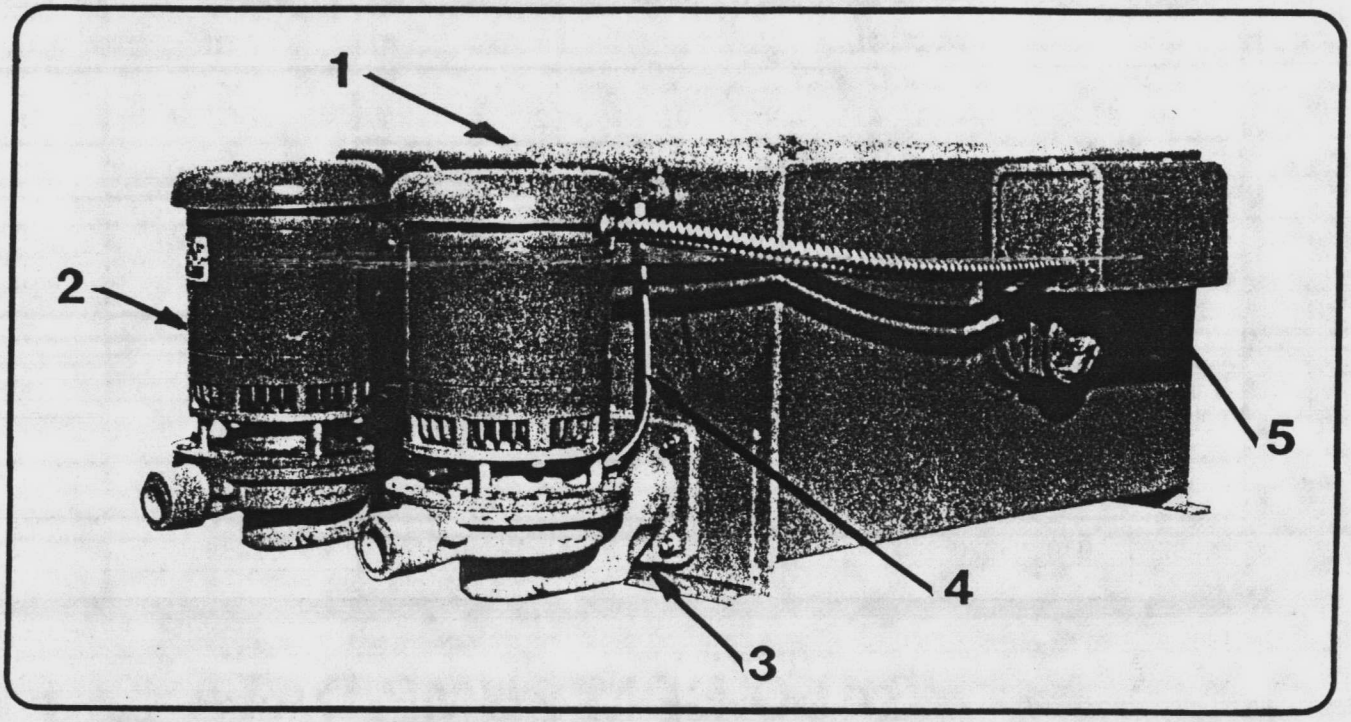

CRV Tank Assembly Common Parts

Item	Description	Part Number
1	Tank	SEE ADJOINING CHART FOR SELECTION
2	Pump and Motor Assembly	SEE ADJOINING CHART FOR SELECTION
3	Gasket - Suction	C8946 (CHV Case) A2-5045 (CRV Case)
4	Bleeder Tube Assembly	P-38 or as noted on pages 7-12
5	Float Switch (Single) Alternator (Duplex)	Spec. 3654 Spec. 3655

Note:

A. Single requires A2-3954 CHV or A2-4286 CRV Blank-Off Plate.
B. Optional Gauge Glass and Cocks is Spec. 2154
C. Optional Thermometer is Spec. 15591.
D. For Complete Information Concerning Any Other Optional Electrical or Other Equipment, Contact Dunham-Bush, Inc. Marshalltown, Iowa.

1750 RPM PUMP DATA

Model	Tank	Pump Style
210, 215, 220, 410, 415, 420, 610, 615, 620	C2-3727	1" A7A-1
230, 240, 430, 440, 630, 640		1" A9A-1
815, 820, 1015, 1020	C2-3728	1" A7A-1
830, 840, 1030, 1040		1" A9A-1
1515, 1520, 2015	C2-3533	1" A7A-1
1530, 1540, 2020, 2030, 2040, 2520, 2530, 2540, 3030		1" A9A-1
2515		1½" A7A-1
3020		1½" A7-1
4020, 4030, 5020	C2-3534	1" A9A-1

3450 RPM PUMP DATA

Model	Tank	Pump Style
210, 215, 220, 230, 240, 410, 415, 420, 430, 440, 610, 615, 620, 630, 640	C2-3530	1" A5-2
250, 260, 270, 450, 460, 470, 650, 660, 670	C2-3727	1" A7A-2
815, 820, 830, 840, 1015, 1020, 1030, 1040	C2-3531	1" A5-2
850, 860, 870, 1050, 1060	C2-3728	1" A7A-2
1070, 1550, 1560, 1570		1" A7-2
1515, 1520, 1530, 1540, 2015, 2020, 2030, 2040, 2515, 2520, 2530, 3020, 3030	C2-3532	1" A5-2
2050	C2-3533	1" A7A-2
2060, 2070, 2540, 2550, 2560, 2570		1" A7-2
3040, 3050, 3060, 3070		1½" A7-2
4020, 4030, 5020	C2-3534	1½" A7A-2
4040, 4050, 4060, 4070, 5030, 5040, 5050, 5060		1½" A7-2

NOTE:

3450 RPM is indicated throughout brochure by the suffix -2.
1750 RPM is indicated throughout brochure by the suffix -1.

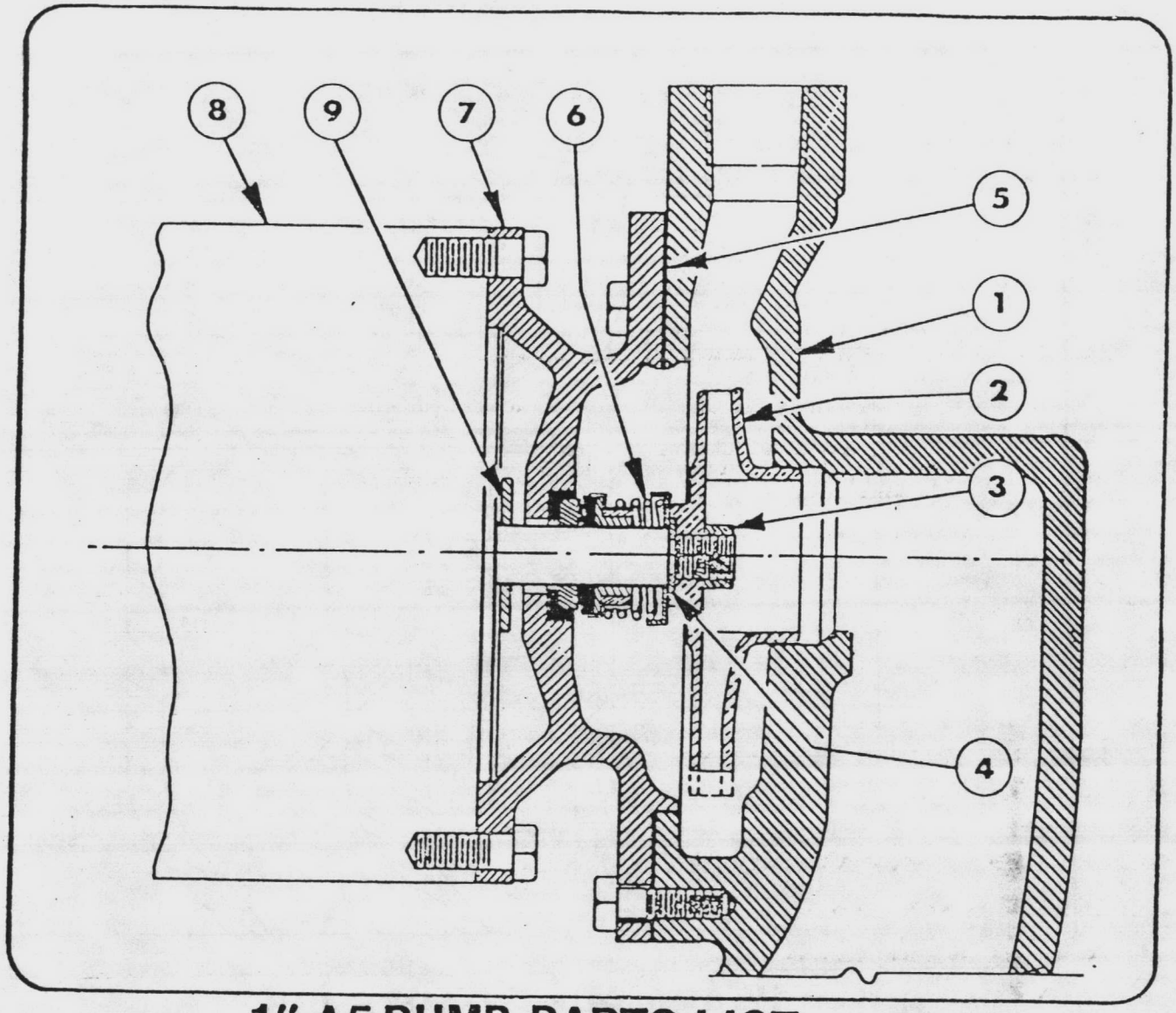

1" A5 PUMP PARTS LIST

3450 RPM

Model	Impeller
210, 410, 610	D5197x3"
215, 415, 615	D5197x3-3/8"
815	D5197x3½"
1015, 2020	D5197x3-5/8"
220, 1515	D5197x3-3/4"
420, 620	D5197x3-7/8"
820, 1020	D5197x4"
1520, 2015	D5197x4-1/8"
2520, 3020	D5423x3-7/8"
230, 430, 630, 830, 1030	D5423x4½"
1530, 2515	D5423x4-3/8"
2030	D5423x4½"
240, 2530, 3030	D5423x4-3/4"
440, 640, 840	D5423x4-7/8"
1040, 1540, 2040	D5423x5"

No	Description	Part Number
1	Case (Cast Iron)	F559
2	Impeller	(FOR SELECTION SEE CHART AT LEFT)
3	Nut - Impeller	P-116
4	Washer	C8709
5	Gasket-Case *	D5352
6	Seal-Shaft *	Spec. 472
7	Head (Cast Iron)	E6042
8	Motor	Contact Dunham-Bush Marshalltown, Iowa
9	Slinger	C8854

*Parts required when replacing seal

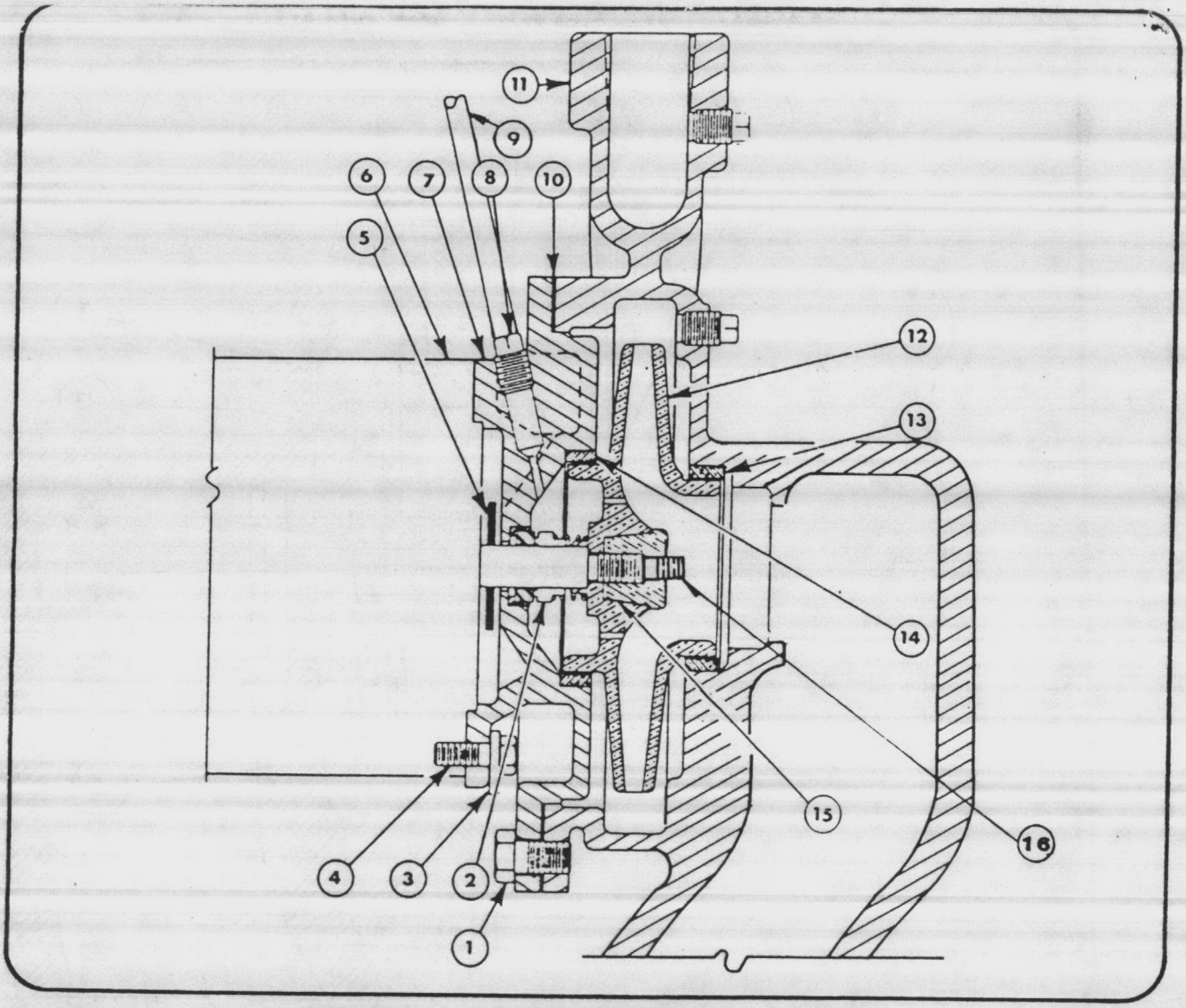

1" A7A PUMP PARTS LIST

Model	Impeller
3450 RPM	
250, 450, 650, 850	C2-2378x5½"
1050	C2-2378x5-5/8"
1550	C2-2378x5-3/4"
260, 460, 2050	C2-2378x5-7/8"
660, 860, 1060	C2-2378x6"
270, 470, 670, 870	C2-2378x6-3/8"
1750 RPM	
210	C2-2378x4-7/82
410	C2-2378x5"
610	C2-2378x5-1/8"
215	C2-2378x5-7/8"
415, 615	C2-2378x6"
815	C2-2378x6-1/8"
1015	C2-2378x6-3/8"
230	C2-2378x6½"
420, 620, 820, 1515	C2-2378x 6-3/4"
1020	C2-2378x7"
2015	C2-2378x7-1/8"
1520	C2-2378x7½"

No	Description	Part Number
1	Screw-Cap	P-150
2	Seal-Mechanical*	Spec. 472
3	Retainer-Head	A2-3023
4	Screw-Cap	P-142
5	Slinger	C8854
6	Motor	Contact Dunham-Bush Marshalltown, Iowa
7	Head (Cast Iron)	C2-2342
8	Fittings- Compression	P-194-Straight P-195- Elbow
9	Tube	3/16 Copper
10	Gasket-Case*	C2-2343
11	Case (Cast Iron)	D2-1546
12	Impeller	SEE CHART
13	Wear Ring-Case	Optional
14	Wear Ring-Head	Optional
15	Nut-Impeller	A2-3691
16	Screw-Impeller	A2-4120

*Parts required when replacing seal

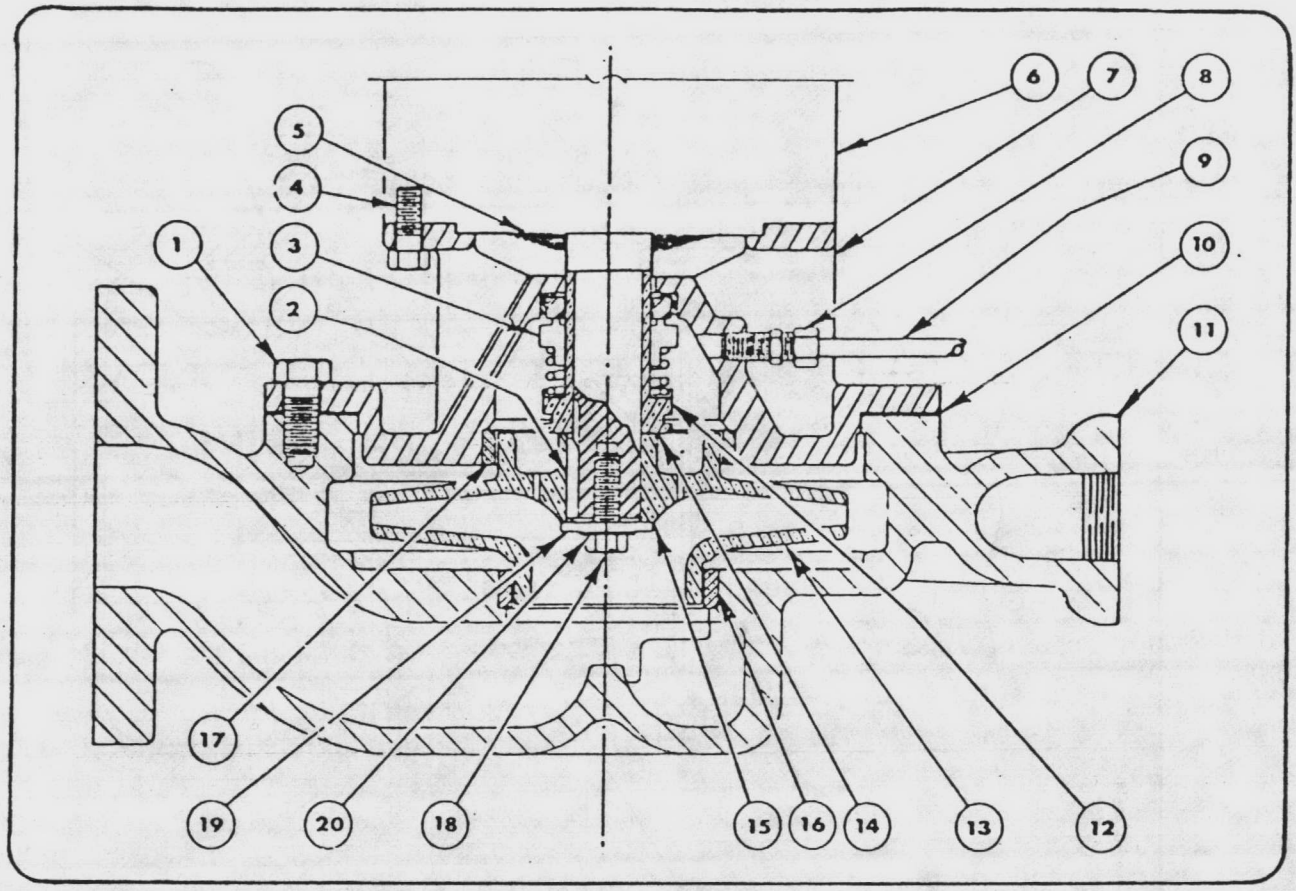

1" A7 PUMP PARTS LIST

3450 RPM

Model	Impeller
2540	C2-2379x5-7/8"
1560, 2550	C2-2379x6-1/8"
2060	C2-2379x6¼"
1070	C2-2379x6-3/8"
1570	C2-2379x6½"
2070, 2560	C2-2379x6-5/8"
2570	C2-2379x6-7/8"

No	Description	Part Number
1	Screw-Cap	P-150
2	Key-Impeller	Supplied W/ Motor
3	Seal-Mechanical*	Spec. 3179
4	Screw-Cap	P-142
5	Slinger	Supplied W/ Motor
6	Motor	Contact Dunham-Bush Marshalltown, Iowa
7	Head (Cast Iron)	C2-2336
8	Fittings- Compression	P-194-Straight P-195-Elbow
9	Tube	3/16 Copper
10	Gasket-Case*	C2-2343
11	Case (Cast Iron)	D2-1546
12	Sleeve*	A2-3018
13	Impeller	SEE CHART
14	Gasket*	A2-3020
15	Gasket*	A2-3022-1
16	Wear Ring-Case	Optional
17	Wear Ring-Head	Optional
18	Screw-Impeller	Spec. 3312
19	Washer-Impeller	A2-3021-1
20	Washer-Sealing	Spec. 3313

*Parts required when replacing seal

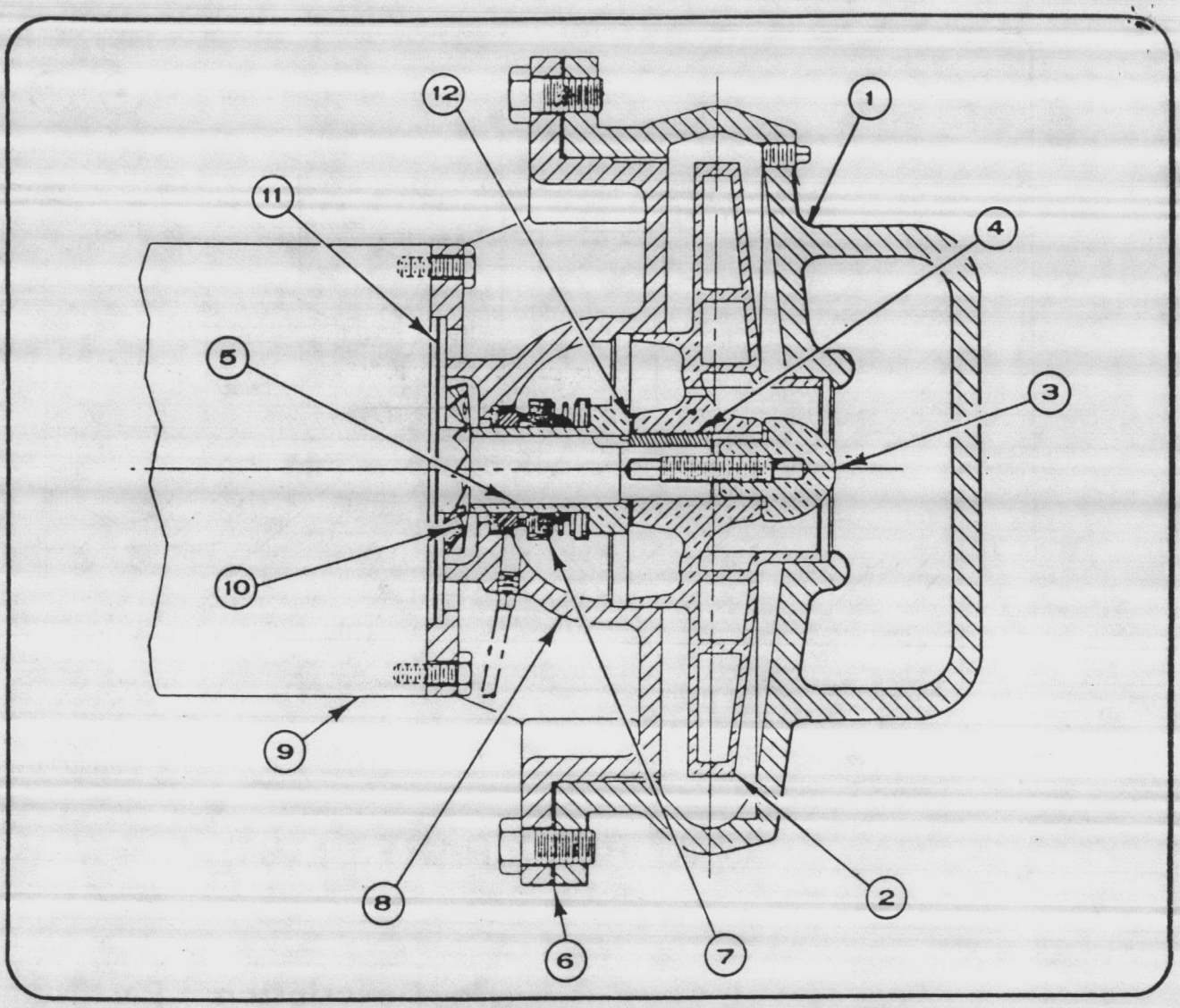

1" A9A PUMP PARTS LIST

1750 RPM

Model	Impeller
2020, 2520	C2-3212x6-5/8"
4020	C2-3212x6-7/8"
5020	C2-3212x7-1/8"
1530, 2030, 2530	C2-3212x7-7/8"
230, 430, 630, 830, 1030, 3030, 4030	C2-3212x8"
240, 440, 640, 840 1040, 1540, 2040, 2540	C2-3212x9"

No	Description	Part Number
1	Case (Cast Iron)	D2-1576
2	Impeller	SEE CHART
3	Stud & Nut Assembly	C10035 A2-3898
4	Key	C7763
5	Sleeve*	A2-3905
6	Gasket*	D5450
7	Seal-Shaft*	Spec. 3179
8	Head (Cast Iron)	D2-1478
9	Motor	Contact Dunham-Bush Marshalltown, Iowa
10	Slinger	C10038
11	Shield	C8958
12	Gasket *	A2-3020

*Parts required when replacing seal

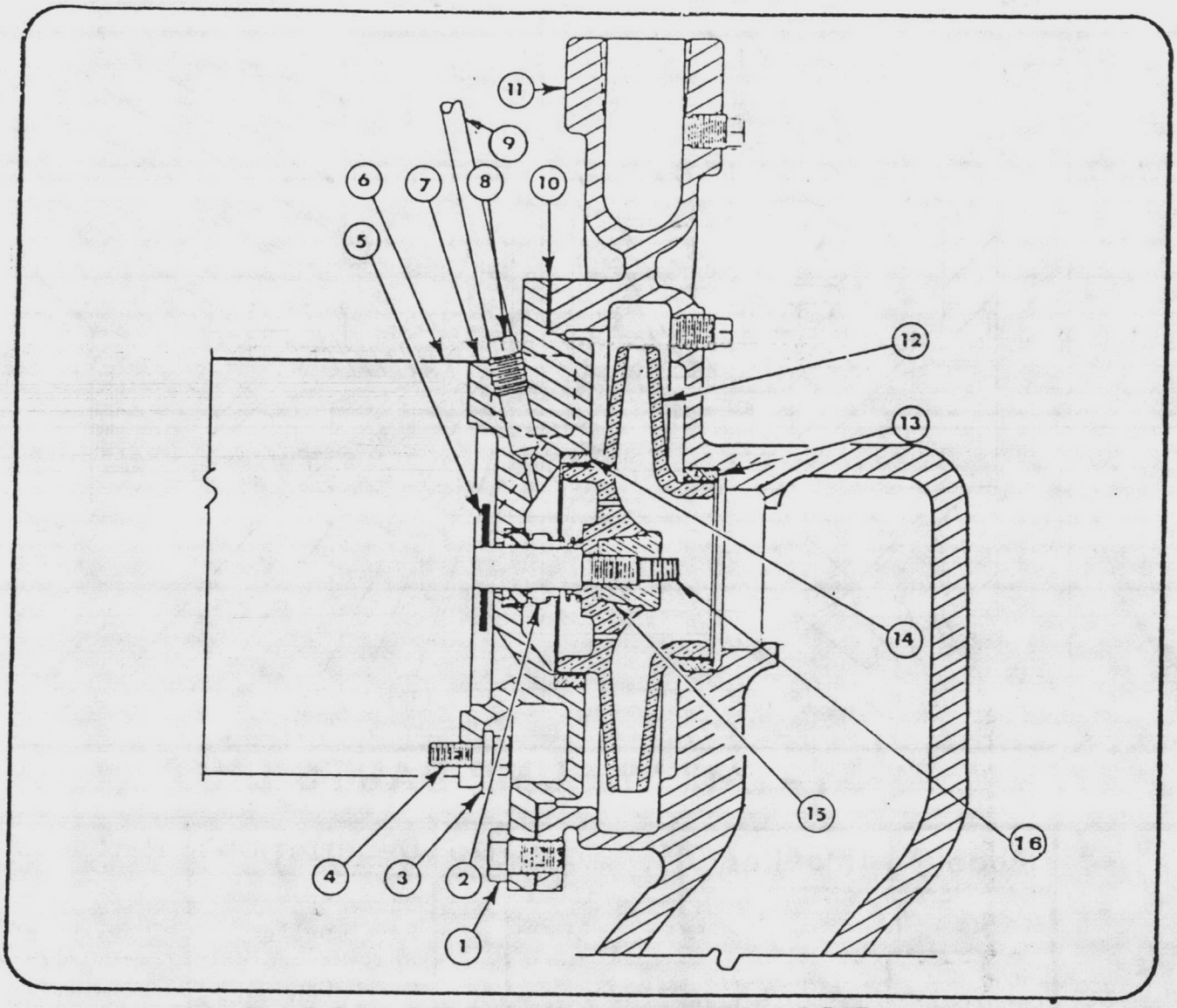

1—1/4" A7A PUMP PARTS LIST

Model	Impeller
3450 RPM	
4020	C2-2339x4-1/8"
4030	C2-2339x4-3/4"
5020	C2-2339x4-3/8"
1750 RPM	
2515	C2-2339x6½"

No	Description	Part Number
1	Screw-Cap	P-150
2	Seal-Mechanical*	Spec. 472
3	Retainer-Head	A2-3023
4	Screw-Cap	P-142
5	Slinger	C8854
6	Motor	Contact Dunham-Bush Marshalltown, Iowa
7	Head (Cast Iron)	C2-2342
8	Fittings-Compression	P-194-Straight P-195- Elbow
9	Tube	3/16 Copper
10	Gasket-Case*	C2-2343
11	Case (Cast Iron)	D2-1546
12	Impeller	SEE CHART
13	Wear Ring-Case	Optional
14	Wear Ring-Head	Optional
15	Nut-Impeller	A2-3691
16	Screw-Impeller	A2-4120

*Parts required when replacing seal

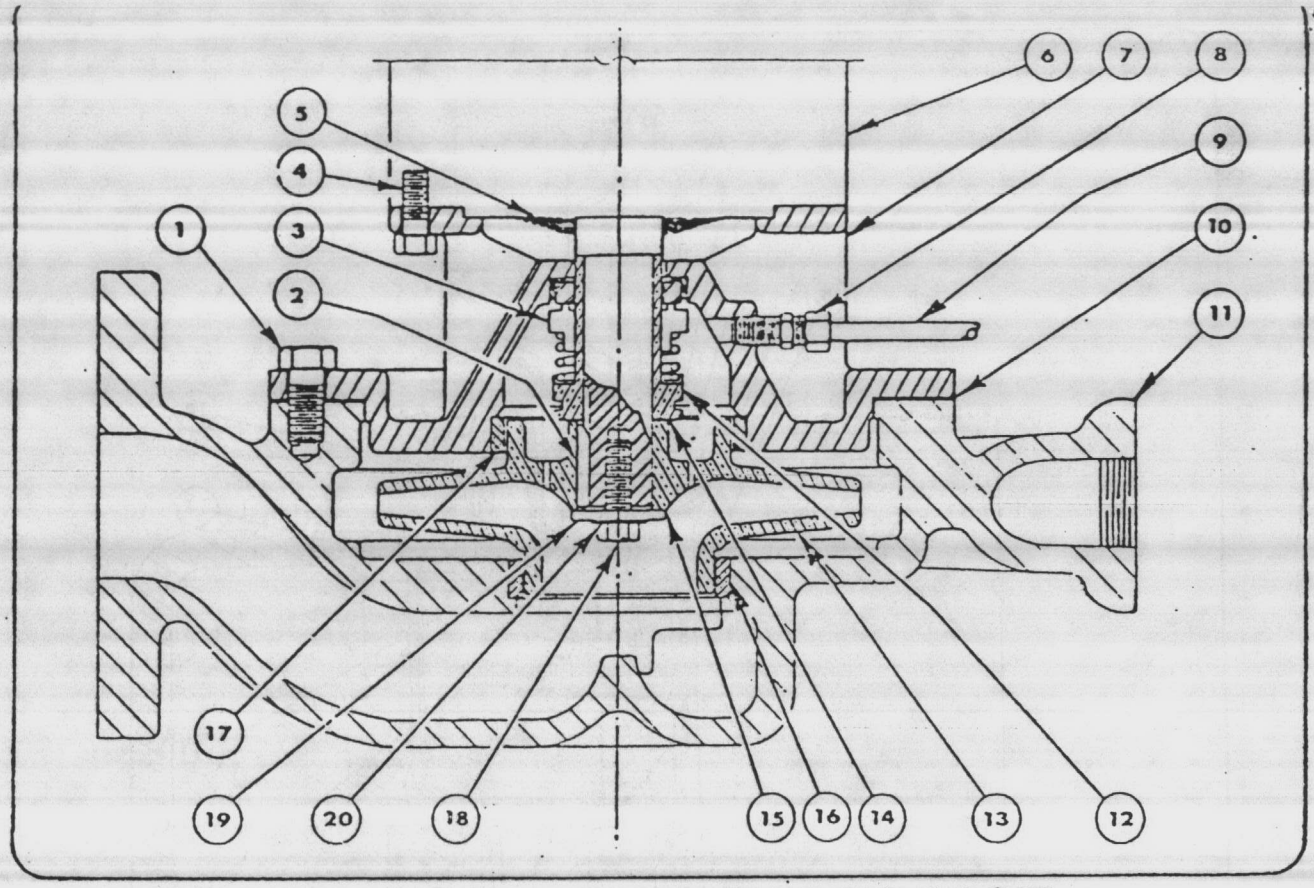

1–1/4" A7 PUMP PARTS LIST

Model	Impeller
3450 RPM	
5030	C2-2340x4-7/8"
3040, 4040	C2-2340x5-1/8"
5040	C2-2340x5¼"
3050	C2-2340x5-5/8"
4050, 5050	C2-2340x5-3/4"
3060, 4060	C2-2340x6-1/8"
5060	C2-2340x6¼"
3070	C2-2340x6½"
4070	C2-2340x6-5/8"
1750 RPM	
3020	C2-2340x7"

No	Description	Part Number
1	Screw-Cap	P-150
2	Key-Impeller	Supplied W/ Motor
3	Seal-Mechanical*	Spec. 3179 .
4	Screw-Cap	P-142
5	Slinger	Supplied W/ Motor
6	Motor	Contact Dunham-Bush Marshalltown, Iowa
7	Head (Cast Iron)	C2-2336
8	Fittings- Compression	P-194-Straight P-195-Elbow
9	Tube	1/8" Copper
10	Gasket-Case*	C2-2343
11	Case (Cast Iron)	D2-1548
12	Sleeve*	A2-3018
13	Impeller	SEE CHART
14	Gasket*	A2-3020
15	Gasket*	A2-3022-1
16	Wear Ring-Case	Optional
17	Wear Ring-Head	Optional
18	Screw-Impeller	Spec. 3312
19	Washer-Impeller	A2-3021-1
20	Washer-Sealing	Spec. 3313

*Parts required when replacing seal

ITEM 3

ARMSTRONG HOT & CHILLED WATER PUMPS

Supplied by: Morgan & Kirkman Associates, Inc.
P.O. Box 172
Fayetville, N.C. 28302
PH: (919) 484-5796

Parts can be furnished by
above supplier.

Installed by: Ramsey Air Conditioning, Inc.
P.O. Box 1333
Jacksonville, N.C. 28540
PH: (919) 455-0414

File No.:	5040.66
Date:	June 1.1984
Supersedes:	5040.66
Date:	Sept.15.1980

ARMSTRONG CENTRIFUGAL PUMPS

INSTALLATION AND OPERATING INSTRUCTIONS

SERIES 4030 BASE MOUNTED PUMP

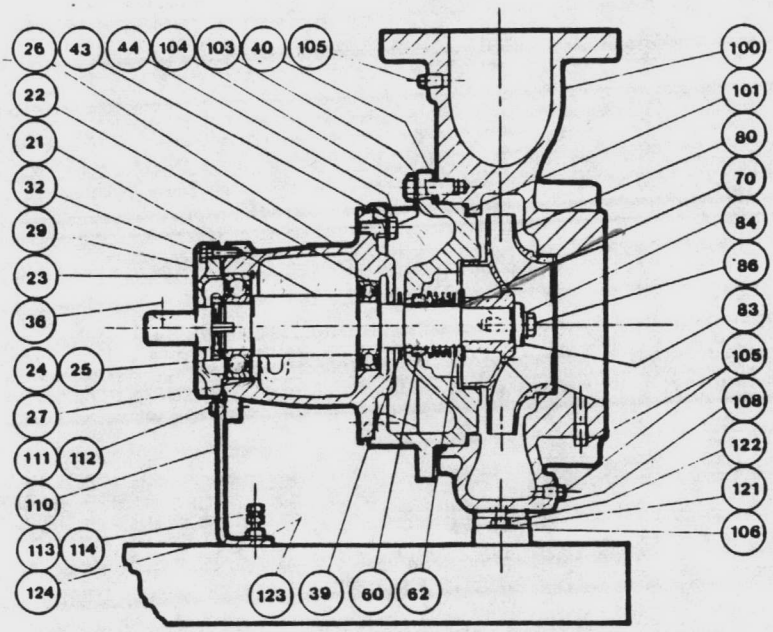

21 Shaft
22 Bearing (Inboard)
23 Bearing (Outboard)
24 Lockwasher
25 Lock Nut
26 Bearing Housing
27 Snap Ring
29 Cap (O/B)
32 Capscrew Hex. Hd.
36 Key Woodruff
39 Water Slinger
40 Adapter
43 Washer
44 Capscrew Hex. Hd.
60 Seat
62 Mech. Seal
70 Shaft Sleeve
80 Impeller
83 Washer Imp.
84 Lockwasher (When fitted)
86 Capscrew Hex. Hd.
100 Casing
101 Gasket
103 Washer
104 Capscrew Hex. Hd.
105 Pipe plug
106 Support Foot
108 Capscrew
110 Support Foot (Casing)
111 Washer
112 Capscrew Hex. Hd.
113 Nut Jam (When fitted)
114 Capscrew (When fitted)
121 Washer
122 Capscrew Hex. Hd.
123 Washer
124 Capscrew Hex. Hd.

CAUTION

Particular care must be taken to check the following before pump is started up:-

1. *Is the pump primed?*
2. *Alignment OK?*
3. *Rotation OK?*
4. *Lubrication OK?*
5. *Pipework properly supported?*
6. *Voltage supply OK?*
7. *Overload protection OK?*
8. *Is the system clean?*

Armstrong Warranty does not cover any damage to the equipment resulting from failure to observe the above precautions.

GENERAL: Armstrong Centrifugal Pumps, properly installed and given reasonable care and maintenance, will perform satisfactorily for a long period of time. These instructions describe the procedures which should be followed to ensure trouble-free operation.

LOCATION

LOCATE THE PUMP WHERE IT IS EASILY ACCESSIBLE FOR INSPECTION AND SERVICING, AND PROVIDE ADEQUATE HEADROOM FOR HOIST FACILITIES IN THE CASE OF LARGER PUMPS. MOTOR-DRIVEN UNITS SHOULD NOT BE LOCATED IN DAMP ATMOSPHERES UNLESS THIS CONDITION HAS BEEN PROVIDED FOR IN THE MOTOR ENCLOSURE.

FOUNDATION

THE FOUNDATION SHOULD BE SUFFICIENTLY SUBSTANTIAL TO ABSORB ANY VIBRATION AND TO FORM A PERMANENT RIGID SUPPORT FOR THE BASEPLATE. THIS IS ESSENTIAL IN MAINTAINING THE ALIGNMENT OF A DIRECT-CONNECTED UNIT. A GOOD CONCRETE FOUNDATION SHOULD WEIGH TWO-AND-ONE-HALF TIMES THE SHIPPING WEIGHT OF THE PUMP. IN BUILDING THE FOUNDATION, MAKE AMPLE ALLOWANCE FOR GROUTING.

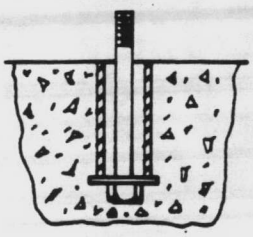

FOUNDATION BOLTS OF THE PROPER SIZE SHOULD BE ARRANGED AS SHOWN, WITH A PIPE SLEEVE EMBEDDED IN THE CONCRETE TO PERMIT ADJUSTMENT OF THE BOLTS AFTER THE CONCRETE HAS BEEN POURED. USE SLEEVES WITH A DIAMETER TWO-AND-ONE-HALF TIMES THE DIAMETER OF THE BOLTS.

LEVELLING

WHEN THE UNIT HAS BEEN PLACED ON ITS FOUNDATION, SLACKEN OFF THE COUPLING SET SCREWS AND SLIDE BACK THE COUPLING HALVES SO THAT THE PUMP AND MOTOR SHAFTS ARE FREE TO ROTATE INDEPENDENTLY. RE-TIGHTEN THE SET SCREWS IN THIS POSITION. DO NOT RE-CONNECT THE COUPLING UNTIL AFTER THE UNIT HAS BEEN PIPED UP, FINALLY ALIGNED AND CHECKED FOR CORRECT DIRECTION OF ROTATION.

INSERT METAL WEDGES APPROXIMATELY 1" THICK ON EITHER SIDE OF THE FOUNDATION BOLTS UNDER THE BASE-PLATE AS SHOWN. ADJUST WEDGES UNTIL THE SHAFTS OF THE PUMP AND MOTOR ARE LEVEL. ON FLANGED PUMPS, CHECK SUCTION AND DISCHARGE FLANGES FOR VERTICAL OR HORIZONTAL POSITION, USING A LEVEL, AND CORRECT AS NECESSARY BY ADJUSTING THE WEDGES.

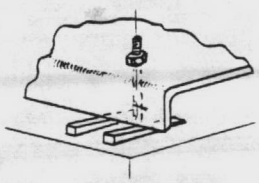

WHEN THE BASEPLATE IS COMPLETELY LEVEL, THE FOUNDATION BOLTS SHOULD BE TIGHTENED EVENLY AND FIRMLY. DO NOT OVER-TIGHTEN BOLTS AT THIS STAGE.

Armstrong PUMPS

Armstrong PUMPS

INSTALLATION AND OPERATING INSTRUCTIONS
SERIES 4030 BASE MOUNTED PUMP

ALIGNMENT

THE PUMP UNIT IS ACCURATELY ALIGNED IN OUR FACTORY PRIOR TO BEING SHIPPED. HOWEVER, ALL BASEPLATES ARE FLEXIBLE TO SOME EXTENT AND MUST NOT BE RELIED UPON TO MAINTAIN FACTORY ALIGNMENT. RE-ALIGNMENT IS NECESSARY AS FOLLOWS:

1. AFTER THE UNIT HAS BEEN SET LEVEL ON ITS FOUNDATION.
2. AFTER THE GROUT HAS SET AND THE FOUNDATION BOLTS HAVE BEEN TIGHTENED.
3. AFTER THE PIPES HAVE BEEN CONNECTED.

ACCURATE ALIGNMENT IS ABSOLUTELY ESSENTIAL. PROPER MECHANICAL OPERATION OF THE EQUIPMENT CANNOT BE GUARANTEED UNLESS THE FACTORY ALIGNMENT IS REPRODUCED IN THE FIELD.

COUPLING ALIGNMENT

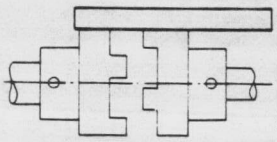

CHECK THE ALIGNMENT BY PLACING A STRAIGHT EDGE ACROSS THE COUPLING RIMS AT THE TOP, BOTTOM AND BOTH SIDES. CARE MUST BE TAKEN TO HAVE THE STRAIGHT EDGE PARALLEL TO THE AXIS OF THE PUMP AND MOTOR SHAFT. ALIGNMENT IS OBTAINED WHEN THE STRAIGHT EDGE RESTS EVENLY ON BOTH RIMS IN ALL FOUR POSITIONS. ADJUST AS NECESSARY BY PLACING SHIMS UNDER THE MOTOR FEET.

GROUTING

AFTER LEVELLING THE UNIT AND CHECKING THE ALIGNMENT, FILL THE BASEPLATE COMPLETELY WITH GROUT, ALLOWING IT TO FLOW AROUND THE WEDGES UNDER THE BASEPLATE. ALLOW 48 HOURS FOR THE GROUT TO HARDEN BEFORE FINAL TIGHTENING OF THE FOUNDATION BOLTS.

PIPING

BOTH THE SUCTION AND DISCHARGE PIPES SHOULD BE INDEPENDENTLY SUPPORTED NEAR THE PUMP SO THAT NO STRAIN IS IMPOSED ON THE PUMP WHEN THE PIPES ARE CONNECTED. ALL CONNECTING PIPEWORK SHOULD BE ACCURATELY LOCATED - DO NOT ATTEMPT TO FORCE THE SUCTION AND DISCHARGE PIPES INTO POSITION.

SUCTION PIPING

USE SHORT DIRECT SUCTION PIPING ONE OR TWO TIMES LARGER THAN THE PUMP SUCTION NOZZLE. ARRANGE PIPING TO ELIMINATE POTENTIAL AIR POCKETS AND USE AN ECCENTRIC REDUCER TO CONNECT TO THE SUCTION NOZZLE. A STRAINER THREE OR FOUR TIMES THE AREA OF THE SUCTION PIPE WILL PREVENT FOREIGN MATERIALS ENTERING THE PUMP.

DISCHARGE PIPING

A CHECK VALVE AND GATE VALVE SHOULD BE INSTALLED IN THE DISCHARGE LINE. IF AN INCREASER IS USED ON THE DISCHARGE SIDE TO INCREASE THE SIZE OF THE DISCHARGE PIPE, IT SHOULD BE PLACED BETWEEN THE CHECK VALVE AND THE PUMP.

FINAL ALIGNMENT

WHEN THE PIPING HAS BEEN CONNECTED, CHECK THE ALIGNMENT AND MAKE CORRECTIONS IF NECESSARY. ENERGISE THE MOTOR (WITH COUPLING HALVES DISCONNECTED) AND CHECK THAT THE ROTATION CORRESPONDS WITH THE DIRECTION ARROW ON THE PUMP. TO REVERSE THE ROTATION ON A THREE-PHASE MOTOR, INTERCHANGE TWO LEADS.

WHEN ROTATION AND ALIGNMENT ARE CORRECT, RECONNECT THE COUPLING WITH BOTH HALVES BUTTING AGAINST THE RUBBER INSERT. TIGHTEN THE COUPLING SET SCREWS.

PUMP LUBRICATION

YOUR PUMP HAS BEEN BUILT WITH GREASED LUBRICATED BALL BEARINGS. THESE BEARINGS ARE CUSTOM GREASED FOR GENERAL SERVICE APPLICATIONS AND SEALED. NO FURTHER LUBRICATION SHOULD BE NECESSARY.

MOTOR LUBRICATION

FOLLOW THE LUBRICATION PROCEDURES RECOMMENDED BY THE MOTOR MANUFACTURER. IN MOST CASES IT WILL BE FOUND THAT THE MOTOR BEARINGS ARE CUSTOM-GREASED FOR SEVERAL YEARS' OPERATION AND REQUIRE LITTLE OR NO ATTENTION.

MECHANICAL SEAL

THE MECHANICAL SEAL REQUIRES NO SPECIAL ATTENTION OR ADJUSTMENT. HOWEVER, DO NOT RUN THE PUMP DRY AS THE SEAL MUST HAVE A FILM OF LIQUID BETWEEN THE SEAL FACES FOR PROPER OPERATION.

SYSTEM CLEANLINESS: *Before starting the pump, the system must be thoroughly cleaned, flushed and drained and then replenished with clean liquid. Welding slag and other foreign materials — "Stop Leak" and cleaning compounds — excessive or improper water treatment — are all detrimental to the pump internals. Proper operation cannot be guaranteed if any of these conditions are allowed to exist.*

STARTING AND STOPPING: *The pump must be fully primed on start-up. Fill the pump casing with water, remove the air release plug in the top of the volute and rotate the shaft by hand to remove any air trapped in the impeller. Start the pump with the discharge gate valve closed, then open gradually after the motor is up to speed. To stop the pump, close the discharge valve and trip the motor starter.*

Form No.: 6216-B

PRINTED IN CANADA

ARMSTRONG PUMPS INC.
NORTH TONAWANDA, N.Y. 14120

Armstrong PUMPS

File No:	5043.66
Date:	Mar. 1, 1982
Supersedes:	5043.66
Date:	Sept. 15, 1971

ARMSTRONG CENTRIFUGAL PUMPS

INSTALLATION AND OPERATING INSTRUCTIONS

SERIES 4380 and 4385

VERTICAL IN-LINE PUMPS

SERIES 4380

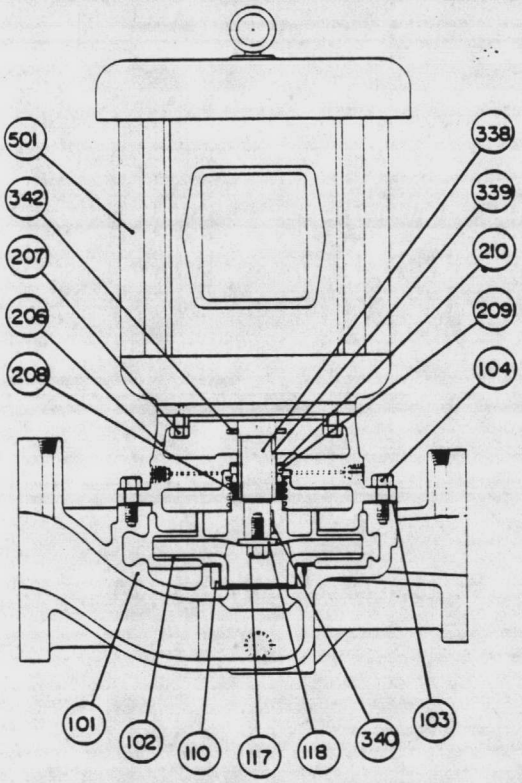

SERIES 4385

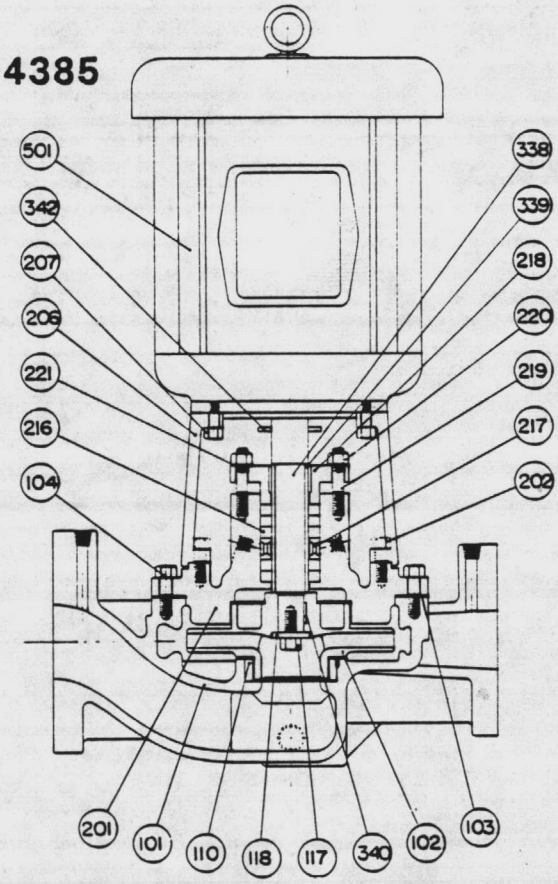

ITEM	DESCRIPTION
101	Volute
102	Impeller
103	Volute Gasket
104	Volute Capscrew
110	Case Wear Ring (Lower)
117	Impeller Capscrew
118	Impeller Washer
201	Coverplate

ITEM	DESCRIPTION
202	Coverplate Capscrew
206	Motor/Pump Bracket
207	Motor Capscrew
208	Mechanical Seal
209	Seat Insert
210	Seat Insert Gasket
216	Gland Packing
217	Lantern Ring
218	Gland Plate

ITEM	DESCRIPTION
219	Gland Stud
220	Gland Nut
221	Gland Washer
338	Shaft
339	Shaft Sleeve
340	Impeller Key
342	Water Slinger
501	Motor

ARMSTRONG CENTRIFUGAL PUMPS, PROPERLY INSTALLED AND GIVEN REASONABLE CARE AND MAINTENANCE, WILL PERFORM SATISFACTORILY FOR A LONG PERIOD OF TIME. THESE INSTRUCTIONS DESCRIBE THE PROCEDURES WHICH SHOULD BE FOLLOWED TO ENSURE TROUBLE-FREE OPERATION.

INSTALLATION AND OPERATING INSTRUCTIONS

SERIES 4380 and 4385

STORAGE MAKE SURE THAT THE UNIT IS KEPT PERFECTLY CLEAN. DO NOT REMOVE CRATING OR PLASTIC WRAPPING UNTIL THE PUMP IS READY FOR INSTALLATION. STORE THE CRATED UNIT WITH THE PUMP IN A VERTICAL POSITION.

UNCRATING AFTER REMOVAL OF THE PUMP FROM THE CRATE, MAKE SURE THE EQUIPMENT IS IN GOOD ORDER AND THAT ALL COMPONENTS ARE RECEIVED AS CALLED FOR ON THE PACKING SLIP. ANY SHORTAGES OR DAMAGE SHOULD BE REPORTED IMMEDIATELY.

LOCATION LOCATE THE PUMP WHERE IT IS EASILY ACCESSIBLE FOR INSPECTION AND SERVICING AND PROVIDE ADEQUATE HEAD ROOM FOR PUMP WITHDRAWAL. DO NOT LOCATE THE PUMP IN DAMP ATMOSPHERES UNLESS THIS POSITION HAS BEEN PROVIDED FOR IN THE MOTOR ENCLOSURE.

INSTALLATION THE MOST IMPORTANT CONSIDERATION IN INSTALLING A VERTICAL IN-LINE PUMP IS TO MAKE SURE THE PUMP IS FREE TO "FLOAT" WITH EXPANSION AND CONTRACTION OF THE PIPING. TWO RECOMMENDED ARRANGEMENTS ARE:

(a) SUPPORTED FROM THE CEILING BY PIPE HANGERS. (FIG. 1)

(b) FLOOR MOUNTED SADDLE SUPPORTS. (FIG. 2)

WHERE REQUIRED, ADDITIONAL FLOOR SUPPORT MAY BE OBTAINED AS SHOWN IN FIG. 3 WITH THE PUMP SUPPORT RING RESTING ON A STEEL PLATE MOUNTED ON A CONCRETE BLOCK. NOTE THAT THE PUMP MUST NOT BE RIGIDLY ATTACHED EITHER TO THE PLATE OR TO THE BLOCK.

DO NOT SUPPORT THE UNIT BY THE MOTOR EYE BOLTS (FIG. 4) OR BY ANY OTHER PART OF THE MOTOR.

DO NOT RIGIDLY CONNECT THE PUMP TO A PERMANENT BASE. (FIG. 5)

DO NOT INSTALL THE UNIT WITH THE SHAFT HORIZONTAL.

PIPING PIPING IS SIMPLE AND STRAIGHTFORWARD WITH A VERTICAL IN-LINE PUMP - THE UNIT FITS IN THE LINE LIKE A VALVE. DO NOT USE FLEXIBLE CONNECTORS ON THE SUCTION OR DISCHARGE - THESE ARE UNNECESSARY.

VALVING INSTALL GATE VALVES OR BUTTERFLY VALVES ON THE SUCTION AND DISCHARGE SIDES TO PERMIT ISOLATION FROM THE SYSTEM FOR SERVICING. A CHECK VALVE SHOULD ALSO BE INSTALLED ON THE DISCHARGE SIDE.

ELECTRICAL CHECK TO SEE THAT THE ELECTRICAL DATA STAMPED ON THE MOTOR NAMEPLATE CORRESPONDS WITH THE POWER SUPPLY AVAILABLE AT THE INSTALLATION.

REFER TO THE MOTOR WIRING DIAGRAM (NORMALLY LOCATED INSIDE THE MOTOR TERMINAL BOX) AND CHECK THAT THE MOTOR LEADS ARE PROPERLY CONNECTED.

INSPECT THE CIRCUIT FUSES AND/OR HEATER ELEMENTS TO MAKE SURE THEY ARE CORRECTLY SIZED FOR THE APPLICATION.

ROTATION ENERGIZE THE MOTOR BRIEFLY AND CHECK THE ROTATION OF THE PUMP. THIS SHOULD CORRESPOND TO THE DIRECTIONAL ARROW (i.e. CLOCKWISE WHEN LOOKING DOWN ON TOP OF THE MOTOR).

TO REVERSE THE ROTATION OF A THREE-PHASE MOTOR, INTERCHANGE TWO OF THE LEADS.

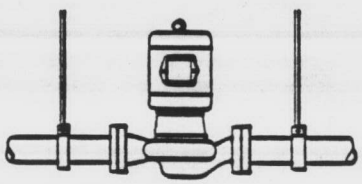

FIG. 1 Pipe Hanger Support

PUMP LUBRICATION

LUBRICATION IS NOT REQUIRED. THERE ARE NO BEARINGS IN THE PUMP.

MOTOR LUBRICATION

REFER TO THE MOTOR INSTALLATION AND OPERATING INSTRUCTIONS AND FOLLOW THE LUBRICATION PROCEDURE RECOMMENDED BY THE MOTOR MANUFACTURER.

SYSTEM CLEANLINESS BEFORE STARTING THE PUMP, THE SYSTEM MUST BE THOROUGHLY CLEANED, FLUSHED AND DRAINED. THEN REFILLED WITH CLEAN LIQUID.

WELDING SLAG AND OTHER FOREIGN MATERIALS, "PIPE LEAK" AND CLEANING COMPOUNDS, EXCESSIVE OR IMPROPER WATER TREATMENT, ARE ALL DETRIMENTAL TO THE PUMP INTERNALS. PROPER OPERATION CANNOT BE GUARANTEED IF ANY OF THESE CONDITIONS ARE ALLOWED TO EXIST.

FINAL CHECK

PARTICULAR CARE MUST BE TAKEN TO DOUBLE CHECK THE FOLLOWING BEFORE THE PUMP IS STARTED UP:

(1) LIQUID IN PUMP?
(2) ROTATION OK?
(3) UNIT PROPERLY SUPPORTED?
(4) VOLTAGE SUPPLY OK?
(5) OVERLOAD PROTECTION OK?
(6) IS THE SYSTEM CLEAN?

ARMSTRONG WARRANTY DOES NOT COVER ANY DAMAGES TO THE EQUIPMENT RESULTING FROM FAILURE TO OBSERVE THE ABOVE PRECAUTIONS.

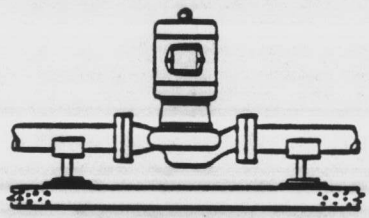

FIG. 2 Floor Saddle Support

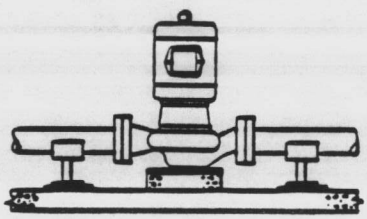

FIG. 3 Additional Floor Support

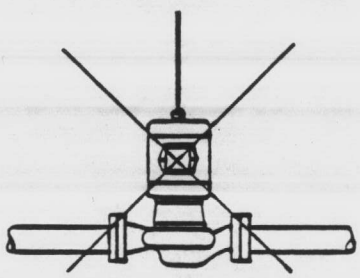

FIG. 4 Incorrect Mounting

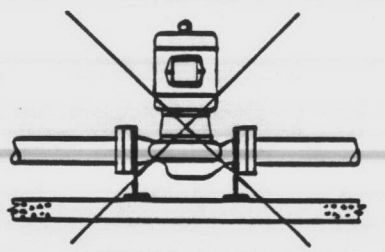

FIG. 5 Incorrect Mounting

SERIES 4380 ONLY

MECHANICAL SEAL

THE MECHANICAL SEAL REQUIRES NO SPECIAL ATTENTION OR ADJUSTMENT. HOWEVER, DO NOT RUN THE PUMP DRY AS THE SEAL MUST HAVE A FILM OF LIQUID BETWEEN THE SEAL FACES FOR PROPER OPERATION.

SERIES 4385 ONLY

STUFFING BOX SEAL

THE STUFFING BOX IS WATER SEALED TO PREVENT AIR LEAKING INTO THE PUMP AND TO LUBRICATE THE PACKING. IF THE PUMP HANDLES CLEAN WATER, THE SEALING LIQUID MAY BE TAKEN DIRECTLY FROM THE PUMP DISCHARGE.

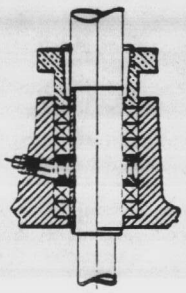

SEALING WATER FROM AN INDEPENDENT SOURCE, AT A PRESSURE OF 15 TO 40 PSI, SHOULD BE PROVIDED UNDER THE FOLLOWING CONDITIONS:

1. WHEN THE PUMP DISCHARGE PRESSURE IS 10 PSI OR LESS.
2. WHEN THE PUMP IS HANDLING WATER OVER 100°F.
3. WHEN THE PUMPED LIQUID IS DIRTY OR GRITTY.

STUFFING BOX. PACKING RINGS ARE LOOSELY INSTALLED WHEN THE PUMP IS SHIPPED FROM OUR FACTORY AND GLAND LEAKAGE WILL BE APPRECIABLE WHEN THE PUMP IS STARTED UP INITIALLY.

ALLOW THE PACKING TO RUN IN FOR A PERIOD OF 20 MINUTES AND THEN COMMENCE A GRADUAL ADJUSTMENT OF THE GLAND. TIGHTEN THE GLAND NUTS NOT MORE THAN A QUARTER TURN AND LET THE PUMP RUN FOR A FURTHER 20 MINUTES. REPEAT THIS PROCEDURE UNTIL THE LEAKAGE RATE IS ACCEPTABLE WITHOUT OVERHEATING THE GLAND. A STEADY DRIP FROM THE GLAND IS ESSENTIAL FOR PROPER LUBRICATION.

DO NOT OVER-TIGHTEN THE GLAND SINCE THIS WILL RESULT IN BURNING THE PACKING AND SCORING THE SHAFT SLEEVE.

PACKING REPLACEMENT

CAREFULLY CLEAN THE STUFFING BOX AND EXAMINE THE SHAFT SLEEVE. IF THE SLEEVE IS SCORED OR GROOVED, IT SHOULD BE REPLACED. APPLY A THIN COATING OF GREASE TO THE PACKING RINGS AND INSTALL THE RINGS ONE AT A TIME, USING THE SPLIT GLAND TO PUSH THE RINGS EVENLY INTO THE STUFFING BOX. THE JOINT OF SUCCESSIVE RINGS SHOULD BE STAGGERED 90°. INSTALL THE LANTERN RING DIRECTLY UNDER THE TAPPED OPENING FOR THE SEALING WATER SUPPLY.

WHEN THE GLAND IS FULLY PACKED, COMPRESS THE PACKING SLIGHTLY FOR 5 MINUTES. RELIEVE THE GLAND COMPLETELY AND THEN BRING IT UP FINGER TIGHT ONLY. RUN IN THE PACKING AS DESCRIBED IN THE PREVIOUS PARAGRAPH.

ARMSTRONG PUMPS INC.
NORTH TONAWANDA, N.Y. 14120

ITEM 4

ARMSTRONG EXPANSION TANKS

Supplied by: Morgan & Kirkman Associates, Inc.
P.O. Box 172
Fayetville, N.C. 28302
PH: (919) 484-5796

Parts can be furnished by
above supplier.

Installed by: Ramsey Air Conditioning, Inc.
P.O. Box 1333
Jacksonville, N.C. 28540
PH: (919) 455-0414

Armstrong PUMPS

ARMSTRONG ASME EXPANSION TANK SUBMITTAL DATA

File No: 5035.96
Date: Apr. 25, 1983
Supersedes: 5036.96
Date: Jan. 25, 1982

MODEL AET - CAPACITIES 15 GALS. THROUGH 505 GALS.

☒ Painted ☐ Galvanized

CUSTOMER	CUSTOMER'S ORDER NO.	ARMSTRONG REFERENCE
RAMSEY AIR CONDITIONING	PO # 0521	

ENGINEER	JOB REFERENCE	LOCATION
	USEPH	CAMP LEJEUNE, NORTH CAROLINA

SPECIFICATION REFERENCE	
Size	Quantity
30 X 62	2

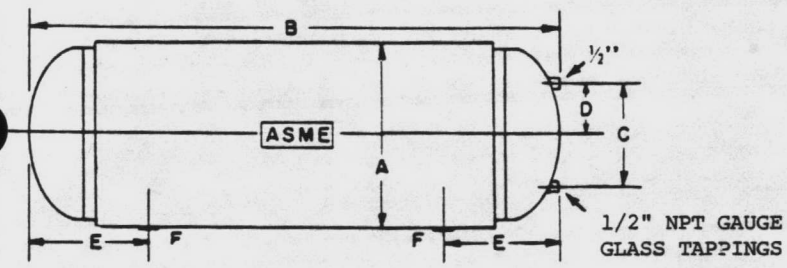

ASME - NB HORIZONTAL EXPANSION TANKS

MAXIMUM TEMPERATURE 650°F

NOTES:

1. Tanks are constructed to the ASME Code for Unfired Pressure Vessels.
2. Tanks are registered with National Board of Boiler and Pressure Vessel Inspectors.
3. Tell tale holes are furnished in lieu of inspection opening on sizes through 135 gals. Two 2" plugged inspection openings are provided on sizes 175 gals. through 505 gals.
4. Gauge glass tappings included. (Fittings not furnished by Armstrong Pumps Inc.)
5. ☒ Tanks painted with one (1) coat red oxide enamel.
   ☐ Tanks galvanized.

REQUIRED TANK FITTING	MODEL NO.	CAPACITY GALS.	A	B	C	D	E	F NPT	WEIGHT LBS.	WORKING PRESSURE
TMA-12	AET 12 x 33	15	12"	33"	8"	4"	7"	1"	46	150#
TMA-12	AET 12 x 51	24	12"	50-1/2"	8"	4"	7"	1"	64	150#
TMA-14	AET 14 x 48	30	14"	48"	10"	5"	8-3/8"	1"	67	150#
TMA-14	AET 14 x 63	40	14"	63"	10"	5"	8-3/8"	1"	85	150#
TMA-16	AET 16 x 72	60	16"	72"	12"	6"	9-1/4"	1"	115	150#
TMA-20	AET 20 x 62	80	20"	62-1/2"	16"	8"	10"	1"	134	125#
TMA-20	AET 20 x 78	100	20"	78"	16"	8"	10"	1"	166	125#
TMA-24	AET 24 x 65	120	24"	65"	20"	10"	11-1/8"	1"	199	125#
TMA-24	AET 24 x 72	135	24"	72"	20"	10"	11-1/8"	1"	219	125#
TMAL	AET 30 x 62	175	30"	62-1/4"	22"	11"	13-1/2"	1-1/2"	304	125#
TMAL	AET 30 x 77	220	30"	77"	22"	11"	13-1/2"	1-1/2"	364	125#
TMAL	AET 30 x 84	240	30"	84"	22"	11"	13-1/2"	1-1/2"	394	125#
TMAL	AET 30 x 105	305	30"	105-3/4"	22"	11"	13-1/2"	1-1/2"	489	125#
TMAL	AET 36 x 71	285	36"	71-1/4"	28"	14"	14-3/4"	1-1/2"	498	125#
TMAL	AET 36 x 93	400	36"	93-1/2"	28"	14"	14-3/4"	1-1/2"	647	125#
TMAL	AET 36 x 120	505	36"	120-3/4"	28"	14"	14-3/4"	1-1/2"	802	125#

PREPARED BY ..MORGAN-HORKMAN ASSOC., INC.

DATE .....1-16-86.....

ARMSTRONG PUMPS INC.
NORTH TONAWANDA, N.Y. 14120

ITEM 5

ARMSTRONG AIR CONTROL DEVICES

Supplied by: Morgan & Kirkman Associates, Inc.
P.O. Box 172
Fayetville, N.C. 28302
PH: (919) 484-5796

Parts can be furnished by above supplier.

Installed by: Ramsey Air Conditioning, Inc.
P.O. Box 1333
Jacksonville, N.C. 28540
PH: (919) 455-0414

ARMSTRONG

AIR CONTROL DEVICES FOR HYDRONIC SYSTEMS

FILE NO.:	5011.90
DATE:	Feb. 28/69
SUPERSEDES:	5011.90
DATE:	Oct. 24/66

ARMSTRONG BMA BOILER FITTING

Armstrong BMA Boiler Fittings are made in sizes 1" through 4". The size selected should be the same as the supply main at the boiler. The Armstrong Boiler Fitting is designed to remove the air at the point of release - the boiler.

FIG. 1

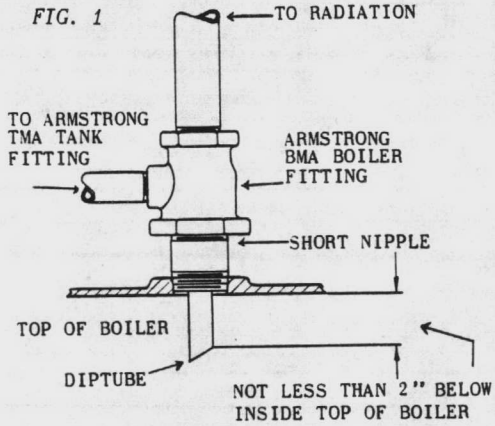

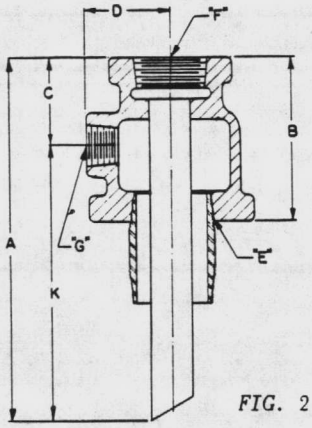

FIG. 2

All dimensions in inches

UNIT NO.	A	B	C	D	PIPE THREAD E	PIPE THREAD F	PIPE THREAD G	K
BMA 1	10½	4	2⅛	1 15/16	2	1	¾	7
BMA 1¼	10½	4	2⅛	1 15/16	2	1¼	¾	7
BMA 1½	10½	4	2⅛	1 15/16	2	1½	¾	7
BMA 2	12½	4½	2½	2½	3	2	¾	8½
BMA 2½	12½	4½	2½	2½	3	2½	¾	8¾
BMA 3	14½	4⅝	2¾	3	4	3	¾	10¾
BMA 4	15⅜	4¾	2½	4⅛	6	4	1¼	11¾

INSTALLATION NOTE

When installing Armstrong BMA Boiler Fittings, care should be taken to ensure that diptube does not strike any obstruction in boiler. If standard diptube is too long for insertion in boiler, diptube may be cut to suit. Diptube must always be installed below inside top of boiler. See Fig. 1.

ARMSTRONG TMA TANK FITTING

The Armstrong Tank Fitting is designed to maintain the correct amount of air in the expansion tank. When selecting the Armstrong Tank Fitting it is important that the diameter of the expansion tank be known and a Tank Fitting be selected to suit as follows: -

FIG. 3

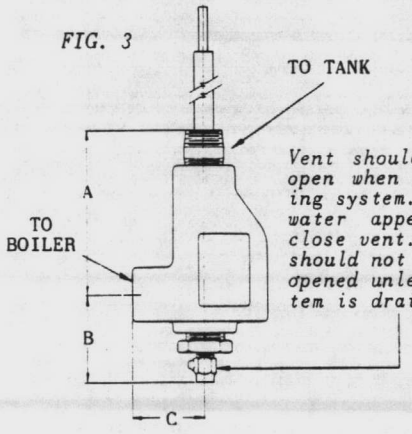

Vent should be open when filling system. When water appears, close vent. Vent should not be re-opened unless system is drained.

SIZE	TANK DIAMETER	CONNECTIONS - NPT TO TANK	CONNECTIONS - NPT TO BOILER	A	B	C
TMA-9	9"	1/2"	3/4"	3-1/2"	2"	1-5/8"
TMA-12	12, 13 or 14"					
TMA-16	16"					
TMA-18	18"					
TMA-20	20"					
TMA-24	24"					
TMA-L	48*	1"	1-1/4"	4-1/2"	2-3/4"	2"

* *TMA-L may be used for smaller diameter tanks. Cut tubing on installation to length equal to 2/3 diameter of tank.*

PIPE SIZING FROM BOILER TO TMA TANK FITTING		
DISTANCE OF HORIZONTAL PIPE FROM BOILER TO FURTHEST TANK		
UNDER 7 FT.	OVER 7 FT. UNDER 20 FT.	OVER 20 FT. UNDER 40 FT.
¼"	1"	1¼"

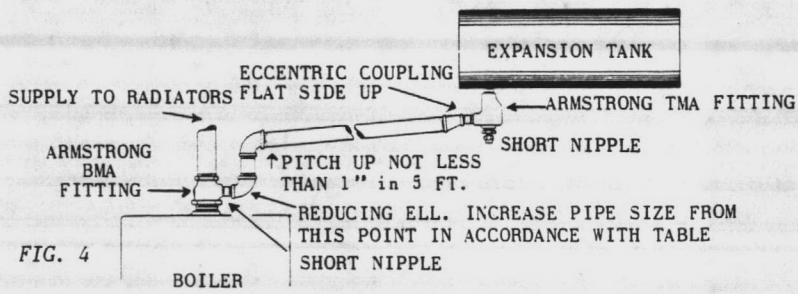

FIG. 4

CAUTION:- When using several Armstrong Boiler Fittings on one boiler, only one Boiler Fitting should be connected to a Tank Fitting. Expansion tank connections on remaining Boiler Fittings must be plugged.

ARMSTRONG

SUBMITTAL DATA

AIR CONTROL DEVICES FOR HYDRONIC SYSTEMS

125 psig WORKING PRESSURE - 250°F MAXIMUM OPERATING TEMPERATURE

CUSTOMER	CUSTOMER'S ORDER NO.	ARMSTRONG REFERENCE

ENGINEER	JOB REFERENCE

SPECIFICATION REFERENCE	QUOTATION REFERENCE

BMA BOILER AIR FITTING

SIZE	1	1¼	1½	2	2½	3	4
No. Req.							

TMA TANK AIR FITTING

SIZE	9	12	16	18	20	24	L
No. Req.							

PREPARED BY:.....

DATE:.....

ARMSTRONG PUMPS INC.
NORTH TONAWANDA, N.Y. 14120

Litho in Canada

ITEM 6

ARMSTRONG AIR SEPARATOR

Supplied by: Morgan & Kirkman Associates, Inc.
P.O. Box 172
Fayetville, N.C. 28302
PH: (919) 484-5796

Parts can be furnished by
above supplier.

Installed by: Ramsey Air Conditioning, Inc.
P.O. Box 1333
Jacksonville, N.C. 28540
PH: (919) 455-0414

ARMSTRONG VORTEX AIR SEPARATOR SUBMITTAL DATA

File No:	5035.955
Date:	April 5, 1982
Supersedes:	5035.955
Date:	Sept. 20, 1974

MODELS: VA-2 TO VA-12 LESS STRAINER
VAS-2 TO VAS-12 WITH STRAINER

CUSTOMER	CUSTOMER'S ORDER NO.	ARMSTRONG REFERENCE
RAMSEY AIR CONDITIONING	PO # 0521	

ENGINEER	JOB REFERENCE
	UEPH

SPECIFICATION REFERENCE	QUOTATION REFERENCE

MODEL NUMBER	MAXIMUM FLOW
VAS-5	500 USGPM

WORKING CONDITIONS

MAXIMUM WORKING PRESSURE ..... 125 psi
MAXIMUM WORKING TEMPERATURE ..... 350°F
HYDROSTATIC TEST PRESSURE ..... 200 psi

CONSTRUCTION OF VORTEX AIR SEPARATOR

Fabricated steel shell constructed according to ASMECode for Unfired Pressure Vessels.

Form U-1A Manufacturer's Data Sheet signed by N.B. Inspector provided in accordance with ASME Code for the following units ONLY: VA5 - VAS5 to VA12 - VAS12 inclusive.

Certificates are not required, and are not available, for smaller Units VA2 - VAS2 to VA4 - VAS4 inclusive.

Connections provided for :
(a) Main inlet and outlet flow
(b) Air connections for line to compression tank
(c) Drain flushing connection at bottom to eliminate dirt and sediment
(d) With strainer (✓) without strainer ( )

SPECIFICATIONS

VERTICALLY MOUNTED AIR SEPARATOR HAVING STEEL TANK WITH TANGENTIAL INLET AND OUTLET FOR SEPARATION OF AIR IN HYDRONIC SYSTEM AND TO ACT AS A SEDIMENT TRAP.

SUITABLE FOR PIPE-LINE MOUNTING.

REMARKS AND/OR ACCESSORIES

DIMENSIONS: SEE REVERSE SIDE

PREPARED BY: MORGAN-KIRKMAN ASSOC., INC.

DATE: 1-16-86

Form No. 6429-E

PRINTED IN CANADA

Armstrong PUMPS

ARMSTRONG PUMPS INC.
North Tonawanda, N. Y. 14120

DIMENSIONAL DATA - ARMSTRONG VORTEX AIR SEPARATOR

NOTES:

1. INLET AND OUTLET CONNECTIONS "A" ARE NPT FOR SIZES 2" TO 3" AND 150# A.S.A. (RF) FLANGED FOR SIZES 4" TO 12"
2. BOLT HOLES IN ALL FLANGES STRADDLE VERTICAL ℄

MAXIMUM WORKING PRESSURE
125 PSIG

MAXIMUM WORKING TEMPERATURE
350°F

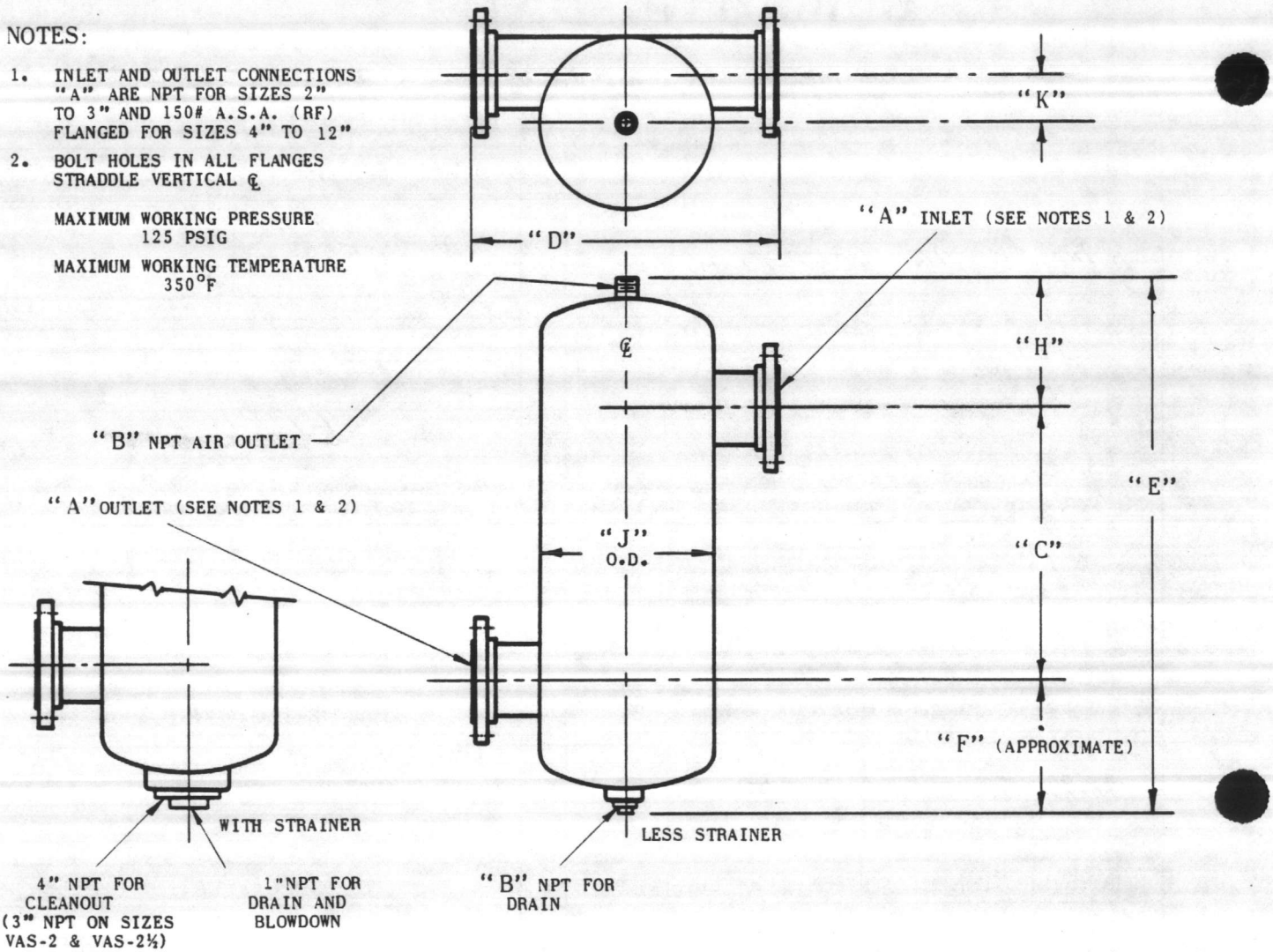

MODEL NUMBER		DIMENSIONS (IN INCHES)											MAX. FLOW USGPM LESS STR.	MAX. FLOW USGPM WITH STR.	APPROX. WEIGHT LBS.	
LESS STR.	WITH STR.	A	B	C	D	E (LESS STRAINER)	F (LESS STRAINER)	E (WITH STRAINER)	F (WITH STRAINER)	H	J	K			LESS STR.	WITH STR.
VA-2	VAS-2	2	1	6	10	18-1/2	6-1/2	19-1/4	7-1/8	6-1/8	5-13/16	1-3/4	60	60	22	25
VA-2½	VAS-2½	2½	1	7	12	18-7/8	5-7/8	19-5/8	6-3/4	6	6-7/8	1-7/8	90	90	27	30
VA-3	VAS-3	3	1	7-1/2	14	20-3/8	6-5/8	21-1/2	7-3/4	6-1/4	8-7/8	2-9/16	180	180	33	36
VA-4	VAS-4	4	1-1/2	9-1/2	18	24-1/2	7-3/4	25-1/2	8-3/4	7-1/4	11	3-1/8	310	310	65	75
VA-5	VAS-5	5	1-1/2	11	20	27-3/4	8-5/8	28-3/4	9-5/8	8-1/8	13-1/8	3-5/8	550	500	88	98
VA-6	VAS-6	6	1-1/2	12-1/2	24	31-1/4	9-5/8	32-3/8	10-3/4	9-1/8	16-3/8	4-11/16	910	725	140	150
VA-8	VAS-8	8	2	16	28	39-3/8	12	40-3/8	13	11-3/8	20-1/2	5-11/16	1850	1250	270	280
VA-10	VAS-10	10	2	20	32	46-7/8	13-3/8	47-7/8	14-3/4	13-1/8	24-1/2	6-5/8	3550	2000	390	400
VA-12	VAS-12	12	2	26	38	57-3/8	16	58-3/8	17	15-3/8	30	8-5/8	4700	2800	830	1030

ITEM 7

ARMSTRONG HEAT EXCHANGER

Supplied by: Morgan & Kirkman Associates, Inc.
P.O. Box 172
Fayetville, N.C. 28302
PH: (919) 484-5796

Parts can be furnished by
above supplier.

Installed by: Ramsey Air Conditioning, Inc.
P.O. Box 1333
Jacksonville, N.C. 28540
PH: (919) 455-0414

ARMSTRONG

TECHNICAL DATA

FILE NO: 138.65
DATE: Oct. 30, 1980
SUPERSEDES: 138.65
DATE: April 25, 1963

(SERVICE MANUAL 1138.65)

HEAT TRANSFER EQUIPMENT

INSTALLATION AND OPERATING INSTRUCTIONS FOR ARMSTRONG HEAT EXCHANGERS

INTRODUCTION

Armstrong Heat Exchangers are designed for highest efficiency and trouble-free service, based on many years of technical and operational research. Careful supervision and inspection of materials and workmanship are important factors in the manufacture of each unit.

In any correspondence relating to Armstrong units, please refer to the serial number which is stamped on the nameplate.

CONSTRUCTION

A shell-and-tube heat exchanger consists of a shell, with inlet and outlet connections, which carries one fluid, and a tube bundle with inlet and outlet connections for the handling of another fluid. The wall of the tubes is the boundary between the two fluids and is known as the "heat transfer surface".

When the temperatures of the two fluids are such as to cause difference in linear expansion of the shell and the tubes, means are provided to prevent this expansion damaging the unit. These means vary with the type of exchanger. A U-tube bundle can move independently of the shell and no other precautions in design need to be taken to take care of expansion. Straight tube bundles requiring consideration for expansion are usually provided with a floating rear head. In lieu of this, the shell may be fitted with a suitable expansion joint. The various uses to which heat exchangers are put, and the economics of each particular application, dictate the method most suitable.

For heating of oils and other liquids of low specific heat and low thermal conductivity, exchangers with fixed tube sheets and no expansion joint are often used. In these cases, the tube wall temperature and the shell temperatures are relatively close, so that it is not considered essential to allow for difference in expansion of these parts when the heating medium is in the shell. If the heating medium were in the tubes, of course, means to take care of expansion would be necessary.

Every care is taken in design to provide a heat exchanger most suitable to meet each situation, consistent with reasonable cost. Various industries and processes have special preferences and requirements which S. A. Armstrong Limited is most anxious to provide.

Standard designs may be modified to embody special features and materials as required. All Armstrong heat exchangers are built to ASME Code. If specified, special requirements of Lloyds Register, Tubular Exchanger Manufacturers' Association (TEMA) Class C and Class R can be incorporated.

INSTALLATION

1. In selecting a location for the heat exchanger, provide sufficient clearance at the head end of the exchanger to permit removal of the tube bundle from the shell. In the case of straight tubes with fixed tube sheets, allow room to remove the heads for inspection and cleaning of tubes, if and when it should become necessary.
2. Provide valves and by-passes in the piping system so that both the shell side and the tube side may be by-passed to permit isolating the unit for inspection and repairs.
3. Provide, as considered necessary, means for cleaning the unit periodically. See also information under "Maintenance".
4. Provide thermometer wells and pressure gauge connections in all piping to and from the unit and located as near the unit as practicable.
5. Provide necessary air vent cocks so that gas or vapor may be purged to prevent binding. A vacuum breaker in a steam space or in piping close to the steam space is desirable to minimize the effect of water-hammer.
6. Foundations must be adequate so that the exchanger will not settle and cause piping strains. In concrete footings, foundation bolts set in pipe sleeves of larger size than the bolt size will allow for adjustment after the foundation has set.
7. Loosen foundation bolts at one end of unit to allow free expansion and contraction of the heat exchanger shell.
8. Set the exchanger level and square so that piping connections may be made without forcing, and also so that the tube bundle and shell of the exchanger do not trap gas, vapor or condensate.
9. Before piping up, inspect all openings in exchanger for foreign material. Remove all shipping plugs and flange covers just before installing, and do not expose the unit to the weather with openings uncovered, since water may freeze and do damage.
10. Be sure entire system is clean before starting operation, to prevent plugging of tubes with sand or foreign material. The use of a strainer or a settling tank in pipe line leading to the exchanger is recommended.

11. Drain connections should not be piped to a common closed manifold.
12. A gauge glass should be installed in a vapor or gas space to indicate possible flooding due to faulty trap operation.
13. To guard against pulsation of fluid due to reciprocating pumps or other equipment, a surge drum is recommended.
14. Quick-opening and closing valves controlling fluids to or from an exchanger may cause water-hammer, and care should be taken in proper selection of such equipment. Water-hammer can cause serious damage to heat exchanger tubes.

OPERATION OF HEAT EXCHANGERS

1. START-UP: When placing a unit in operation, open the vent connections and start to circulate the cold medium only. Be sure the passages in the exchanger are entirely filled with the cold fluid before closing the vents. The hot medium should then be introduced gradually until all passages are filled with the liquid or vapor, as the case may be. Then close the vents and slowly bring the unit up to temperature.

   Always start operation gradually. Do not admit hot fluid to the exchanger suddenly when empty or cold. Do not shock the unit with cold fluid when the unit is hot.

2. BOLTED JOINTS: Heat exchangers are hydrostatically tested in accordance with Code requirements and are certified as satisfactory by inspection agencies agreed upon by the manufacturer and the purchaser. However, normal yielding of gaskets will occur in the interval between hydrostatic testing in the manufacturer's shop and installation at the jobsite. Therefore, all external bolted joints should be properly re-tightened after installation and again after the exchanger has been heated, to prevent leaks and blowing out of gaskets.

3. DESIGN AND OPERATING CONDITIONS: Do not operate equipment under pressure and temperature conditions in excess of those indicated on the nameplate.

4. SHUTTING DOWN: In shutting down, flow of hot fluid should be shut off first. If it is necessary to stop circulation of cooling medium, the circulation of the hot medium should be stopped also, by by-passing or other means.

   When shutting down the system, all fluids should be drained to minimize the possibility of freezing and corrosion. To guard against water-hammer, condensate should be drained from steam heaters and similar units when starting up, as well as when shutting down.

   To minimize water retention after drainage, the tube side of water-cooled exchangers may require blowing out with air.

MAINTENANCE OF HEAT EXCHANGERS

1. IMPORTANT: Follow carefully the procedure recommended for operation. Quick start-up and shut down without proper condensate removal is a major cause of heat exchanger damage.

2. Frequently, and at regular intervals, observe the interior and exterior condition of all tubes and keep them clean. Neglect in keeping all tubes clean may result in complete stoppage of flow through some tubes, with consequent over-heating of these tubes as compared to surrounding tubes, resulting in severe expansion strains and leaking tube joints.

   A light sludge or scale coating on heat exchanger surfaces greatly reduces effectiveness. A marked increase of pressure drop and/or reduction in performance usually indicates that cleaning is necessary, if the unit has been checked for air or vapor binding and this is not found to be the cause. (See paragraph 4 for cleaning methods).

3. When removing tube bundles from exchangers for inspection or cleaning, care should be taken to see that they are not damaged by improper handling. Tube bundles are often of great weight, yet the tubes are small and of relatively thin metal. The tube bundle should therefore never be supported on the tubes, but should rest on parts designed to carry it, i.e. - on tube sheets, baffles or support plates.

   Do not handle tube bundles with hooks or other tools which might damage the tubes. They should be moved about on cradles or skids. Horizontal tube bundles should be lifted by means of suitable slings. Baffles can be easily damaged by dragging a bundle over a rough surface.

4. Provide convenient means as necessary for cleaning heat exchangers at regular intervals.
   (a) Circulating hot wash oil or light distillate through tubes or shell at high velocity will effectively remove sludge or other similar soft deposits.
   (b) Soft salt deposits may be washed out by circulating hot fresh water.
   (c) Some commercially available cleaning compounds may be used to advantage for removing sludge or coke, provided hot wash oil or water, as described above, will not give satisfactory results.
   (d) Removal of various scales and foreign material by chemical cleaning is now being extensively practiced. Certain qualified organizations will check the nature of the deposits to be removed, furnish proper acid solutions containing inhibitors, and provide equipment and personnel for a complete apparatus and piping cleaning job.
   (e) If none of the above methods is effective for the removal of a hard scale, coke, or other deposits, mechanical means may be used for straight tube heat exchangers.

5. CLEANING PRECAUTIONS:
   (a) Do not attempt to clean tubes by blowing steam through individual tubes. This overheats the tube and results in

5. CLEANING PRECAUTIONS (continued)

severe expansion strains and possible leaky tube joints.

(b) Do not blow out heat exchangers with air when fluids normally handled are inflammable.

(c) In cleaning a tube bundle, tubes should not be hammered on to remove hard scale. In case it is necessary to use scrapers, make sure that the scraper is not sharp enough to cut the metal of the tubes.

6. TUBE ROLLING:

To tighten a loose tube joint, use a suitable roller type expander. Do not roll tubes that are not leaking as this needlessly thins the tube wall, and work hardens the metal which makes it brittle. Tubes are rolled in at our factory by means of roller type expanders and the amount of expansion is controlled by means of a torquing device for uniformity and positive sealing.

7. GASKET REPLACEMENT:

Gaskets and gasket faces should be thoroughly clean and should be free of scratches and other defects. Gaskets should be accurately positioned before retightening bolts. It is recommended that, when a heat exchanger is dismantled for any reason, it be re-assembled with new gaskets. Composition gaskets become dried out and brittle so that they do not always provide an effective seal when re-used. Metal or metal jacketted gaskets, when compressed initially, flow to match their contact surfaces. In so doing, they are work-hardened, so if re-used, they may provide an imperfect seal or result in deformation or damage to the gasket contact faces of the exchanger.

8. SPARE AND REPLACEMENT PARTS:

Spare or replacement parts may be obtained for Armstrong Heat Exchangers by reference to the part required and to the serial number of the exchanger appearing on the nameplate. Consideration should be given to stocking parts for exchangers used in a process where shut-down for the time required to obtain parts would be inconvenient. Since some gaskets are made especially and may not be quickly obtainable, it is desirable to have them on hand.

In situations where a shut-down for cleaning and/or repairs could not be conveniently arranged, a standby heat exchanger connected in parallel, or a complete replacement tube bundle on hand for emergency, is recommended.

PARTS OF THE FOREGOING ARE EXCERPTS FROM THE STANDARDS OF THE TUBULAR EXCHANGER MANUFACTURERS ASSOCIATION - 1959 EDITION.

TORQUE REQUIRED TO TIGHTEN FLANGE RING BOLTS

NOMINAL BOLT DIA	STD. MACHINE BOLTS A-307 TORQUE IN FT.-LBS.	HIGH TENSILE BOLTS A-325 OR A193-B7 TORQUE IN FT-LBS
1/2	15	40
5/8	30	75
3/4	50	125
7/8	80	200
1	125	310
1 1/8	200	450
1 1/4	275	650
1 3/8	-	850
1 1/2	-	1000
1 5/8	-	1400
1 3/4	-	1900
1 7/8	-	2500
2	-	2800

Form No. 2465 - A
Litho in Canada

S. A. ARMSTRONG LIMITED
1400 O'Connor Dr., Toronto, Ontario M4B 2T9

J.J. FINNIGAN HOT WATER HEATERS

Supplied by: Morgan & Kirkman Associates, Inc.
P.O. Box 172
Fayetville, N.C. 28302
PH: (919) 484-5796

Parts can be furnished by
above supplier.

Installed by: Ramsey Air Conditioning, Inc.
P.O. Box 1333
Jacksonville, N.C. 28540
PH: (919) 455-0414

J. J. FINNIGAN INDUSTRIES
3595 Old Peachtree Rd.
Duluth, Georgia 30136

SUBJECT: OPERATION AND MAINTENANCE INSTRUCTIONS

ITEM: WATER STORAGE TANKS AND UNFIRED HOT WATER HEATERS

OPERATION

A. Due to simplicity of operation, start-up & operating instructions are not normally needed.

B. Prior to starting-up, fill tank with cold water, venting all air from system. Check for leaks with city water pressure on system.

C. After inspection, start circulator, when applicable, open valves in lines supplying heating medium to tank heater, when applicable.

D. Watch temperature of water in tank and set controls to provide desired outlet temperature, using appropriate temperature control instructions, when applicable.

E. Check safety valves for free operation by lifting lever on side of valve and releasing. Valve should re-seat.

MAINTENANCE

A. Open up tank at maximum twelve (12) month intervals, provided manholes/inspection ports are furnished, wash out all sediment and inspect interior of tank for corrosion, etc.

If tank is lined with a corrosion resistant lining, inspect for damage. If magnesium anodes were supplied originally, check for possible required replacement of anodes.

If tank lining is damaged, check with tank manufacturer for possible suggested repair instructions.

B. Clean off gasket surface of manhole/inspection ports, install new gaskets, pull up all fasteners and fill tank with cold water.

C. Inspect for leaks.

D. Check Relief Valve for free operation.

E. Supply heating medium to tank heater, when applicable, start-up circulator, when applicable and check temperature controls for proper operation.

Following these simple instructions will insure the owner many years of safe, trouble free and efficient operation.

ITEM 9

FLEX-HOSE FLEX PUMP CONNECTORS

Supplied by: Morgan & Kirkman Associates, Inc.
P.O. Box 172
Fayetville, N.C. 28302
PH: (919) 484-5796

Parts can be furnished by
above supplier.

Installed by: Ramsey Air Conditioning, Inc.
P.O. Box 1333
Jacksonville, N.C. 28540
PH: (919) 455-0414

Stainless Steel Pump Connectors

☐ 300 Series Stainless Steel Corrugated Tubing ☐ Stainless Braided ☐ Carbon Steel Fittings ☐ Inert Arc Welded

SMP 2 "–14" I.D.

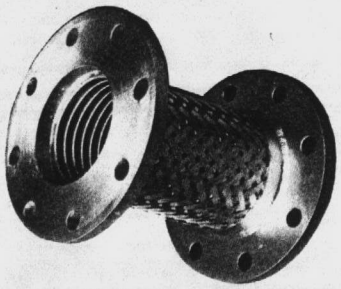

Part Number	Flange IPS and Nominal Hose I.D. (in.)	Overall Length (in.)	Max. Working Pressure at Room Temp. (psi)
2 SMP	2	9	350
2½ SMP	2½	9	250
3 SMP	3	9	250
4 SMP	4	9	200
5 SMP	5	11	200
6 SMP	6	11	175
8 SMP	8	12	150
10 SMP	10	13	150
12 SMP	12	14	150
14 SMP	14	14	125

SF-SP 2"–14" I.D.

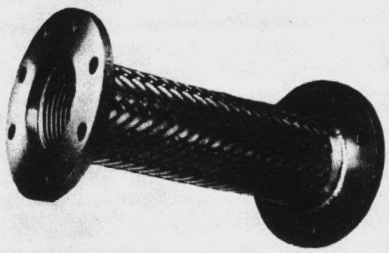

2 SF-SP	2	10¼	350
2½ SF-SP	2½	10¼	250
3 SF-SP	3	10⅝	250
4 SF-SP	4	11¾	200
5 SF-SP	5	13⅝	200
6 SF-SP	6	14⅛	175
8 SF-SP	8	15⅜	150
10 SF-SP	10	17¾	150
12 SF-SP	12	18⅜	150
14 SF-SP	14	20	125

SF-15P 2"–14" I.D.

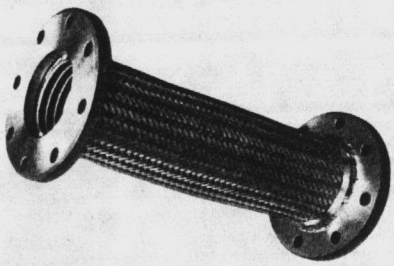

2 SF-15P	2	13	350
2½ SF-15P	2½	13	250
3 SF-15P	3	14	250
4 SF-15P	4	16	200
5 SF-15P	5	18	200
6 SF-15P	6	20	175
8 SF-15P	8	22	150
10 SF-15P	10	24	150
12 SF-15P	12	26	150
14 SF-15P	14	28	125

Bronze Pump Connectors

☐ Seamless Corrugated Tin Bronze Tubing ☐ 98¾% Copper, 1¼% Tin ☐ Bronze Wire Braid ☐ Carbon Steel or Copper Fittings ☐ Inert Arc Welded

BF-15P 2½"–3" I.D.

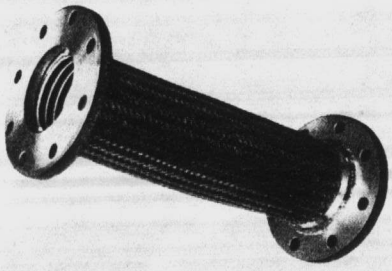

Part Number	Flange IPS and Nominal Hose I.D. (in.)	Overall Length (in.)	Max. Working Pressure at Room Temp. (psi)
2½ BF-15P	2½	16	200
3 BF-15P	3	18	125

PUMP CONNECTORS

What They Are... Why and Where They Are Used

Flex-Hose Pump Connectors are flexible metal connectors available in bronze or stainless steel and are used to prevent damage to pumps caused by piping stress. They also absorb vibration and noise. These connectors are easily installed and reduce the possibility of pump failure.

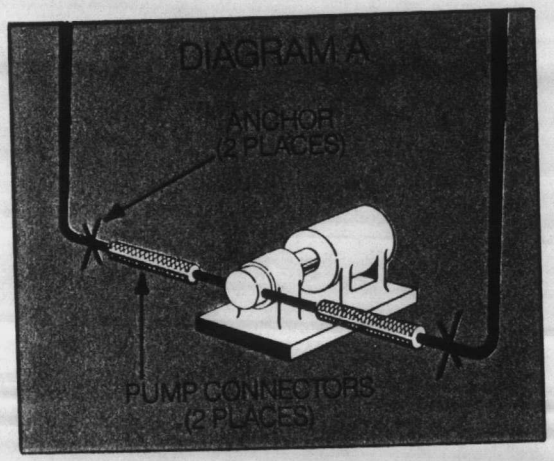

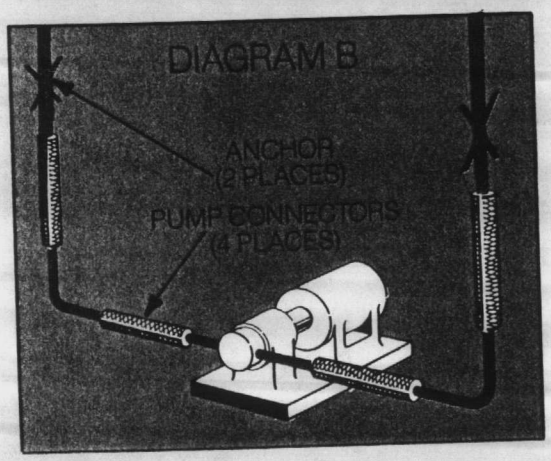

Installation Instructions

Flex-Hose Pump Connectors should be installed in a straight line WITHOUT OFFSET, tension, compression or torque and with the axis of the hose at right angles to the motion at the point of connection.

For maximum Pump Connector effectiveness the connecting piping should be anchored immediately beyond the Connector as shown in Diagram A.

DO NOT compress, stretch, force-rotate, or impose torque on the connector.

DO NOT let the connector support any weight except its own.

DO NOT bend hose sharply near the end fittings or flanges.

DO NOT allow solder to run inside the convolutions or welding sparks on the outside braid of the connector.

In critical installations where severe vibration occurs, a second Pump Connector should be installed at right angles to the first Connector as shown in Diagram B.

Notes: Stainless Steel and Bronze Pump Connectors

1. Maximum temperature for Stainless Steel Pump Connectors is 850 degrees F. Maximum working pressure at 850 degrees F is 75% of maximum working pressure at room temperature.

2. Maximum temperature for Bronze Pump Connectors is 400 degrees F. Maximum working pressure at 400 degrees F is 75% of maximum working pressure at room temperature.

3. Working pressures shown are based on a minimum safety factor of 4:1. Consult Flex-Hose about shock or pulsating pressures.

4. Flanges are plate steel to ASA 150 lb. standard. Forged steel,floating,and 300 lb. ASA flanges can be supplied on request.

5. SF-SP and SMP Pump Connectors should be used only for moderate vibration and installed WITHOUT OFFSET.

6. All Pump Connectors should be installed in a straight line WITHOUT OFFSET. Piping should be anchored or hung so that the weight of the piping does not rest on the Pump Connector.

7. Non-standard lengths for all sizes available on request.

ITEM 10

HOLBY TEMPERING VALVE

Supplied by: Noland Company
P.O. Box 3069
Kinston, N.C. 28501
PH: (919) 523-6171

Parts can be furnished by above supplier.

Installed by: Ramsey Air Conditioning, Inc.
P.O. Box 1333
Jacksonville, N.C. 28540
PH: (919) 455-0414

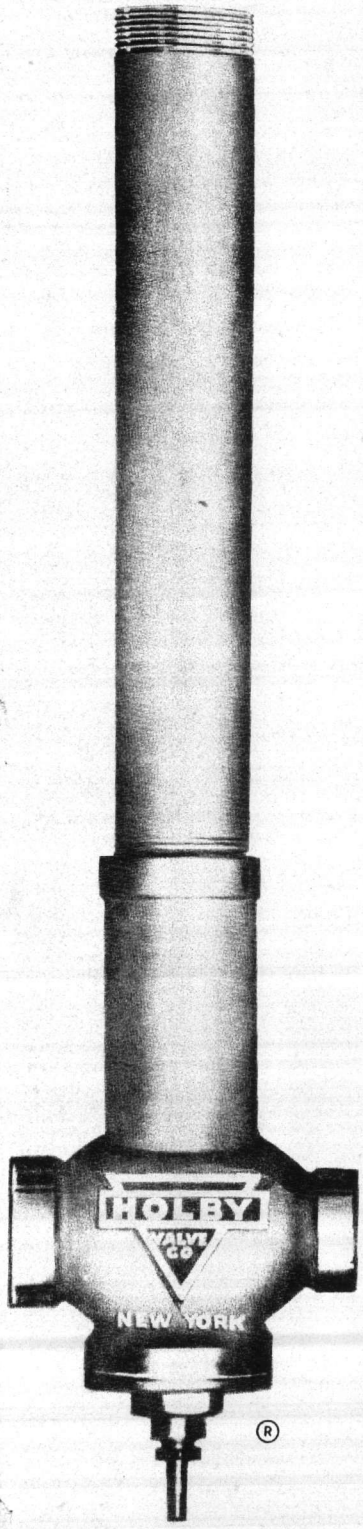

HOLBY

Tempering Valve

AN AUTOMATIC
THERMOSTATICALLY OPERATED
WATER BLENDING DEVICE

JOB: UEPH - 2244
CAMP LEJEUNE, N. C.

APPROVED
by the
BOARD OF STANDARDS AND APPEALS
CITY OF NEW YORK
CAL. #578 - 48 - SM

DISTRIBUTED BY
PLUMBING and HEATING SUPPLIERS

HOLBY VALVE COMPANY, INC.
1146 Second Avenue, New York, N. Y. 10021
(Area Code 212) 838-6363

HOLBY TEMPERING VALVE

APPLICATION

THE HOLBY TEMPERING VALVE is a temperature regulating valve, designed to be used as a master, zone, fixture or individual appliance regulator to control the predetermined temperature of hot water. Water delivered from hot water generating equipment such as storage tanks, heat exchangers, submerged coils, or any other source, is frequently too hot or scalding. This condition can be corrected by the installation of a HOLBY TEMPERING VALVE. It is a necessary part of any submerged tankless water heating system.

The HOLBY TEMPERING VALVE is also used in regulating temperatures for engines, heating systems, compressors, cooling towers, processing machinery and many other applications.

DESCRIPTION

THE HOLBY TEMPERING VALVE is rugged, constructed entirely of bronze and copper and hydrostatically tested to a pressure of 300 pounds. It has the following features:

1. A long mixing chamber with vanes at an angle to the longitudinal axis of the valve which causes a thorough mixing of the hot and cold water.
2. The unusual length of the hydraulic thermostatic element, assures effective contact with the water.
3. The thermostatic element is placed in the body of the valve where the hot and cold water mix. It is immediately sensitive to any change in water temperature and makes proper corrections by opening or closing the hot and cold water inlets in the valve.
4. The sensitive parts of the thermostatic element are inside a heavy non-ferrous tube which protects them from any corrosive or scaling action caused by the continuous flow of water past them.
5. The extraordinary length of the thermostatic element provides fifteen to twenty times the number of corrugations found in the usual short thermostat. Thus, the total expansion is divided over these numerous corrugations, so that the flexing of each is reduced to mere thousandths of an inch with resulting long life of the instrument.
6. The action of the thermostatic element moves a piston over the hot and cold water openings, opening the cold as it reduces the opening of the hot, thus uniformly blending the hot and cold water, producing an even temperature of the delivered water without any change in volume. This action eliminates the building up of temperature in fast circulating systems at times when little or no hot water is being used.

INSTALLATION

THE HOLBY TEMPERING VALVE will operate satisfactorily when installed in any position WITHOUT TRAPPING. It can be installed with a minimum number of extra fittings, reducing installation costs to a minimum. Its extraordinary length takes the place of expensive brass pipe. When installing, our basic piping diagrams should be followed.

The end of the valve, where the adjusting screw is located, should NOT be placed against, nor in line with any other fixed object for a space of twenty-four inches. This will allow access to the inner parts of the valve, if necessary.

TEMPERATURE RANGE

THE HOLBY TEMPERING VALVE can be adjusted to deliver water within close tolerances of any temperature between 120° to 200° Fahrenheit, providing the water supplied to the valve is of a higher temperature than that for which the valve is set.

HIGHER or LOWER temperature ranges available on special order.

REGULATION

The temperature of the water delivered by THE HOLBY TEMPERING VALVE can be changed by turning the adjusting screw to the right or clockwise for lower temperatures; and to the left or counter clockwise for higher temperatures. It will maintain a uniform temperature regardless of temperature of incoming water. To facilitate adjustment a thermometer should be placed in the line beyond the HOLBY TEMPERING VALVE as shown in the diagram and water should be flowing through the HOLBY TEMPERING VALVE while adjustment is being made.

FUNCTIONS

1. To deliver, control or regulate water at a uniform predetermined temperature within close tolerances between 120° and 200° F., providing that such entering water is of the proper temperature necessary and required for the adjustment and operation of the HOLBY TEMPERING VALVE. Other temperature ranges are available, on special order.
2. To prevent wide variations in the temperature of the water, causing excessive expansion and contraction of pipe lines, with resulting costly breakage of pipes, and excessive subsequent damage.
3. To prevent a building up of temperature in the hot water lines during off peak periods. As hot water enters THE HOLBY TEMPERING VALVE the thermostat closes the hot water inlet, and opens the cold water inlet allowing the return circulating water to bypass back into the hot line and thus controlling the rate of circulation. It will not stop circulation but merely regulate it, maintaining a uniform temperature.
4. To increase the capacity of water heating systems, by automatically introducing cold water to the hot water lines and delivering a blended mixture, at the desired temperature.
5. To deliver water at different desired temperatures, to various locations from one originating source.

HOLBY TEMPERATURE REGULATING VALVE - TYPICAL INSTALLATIONS

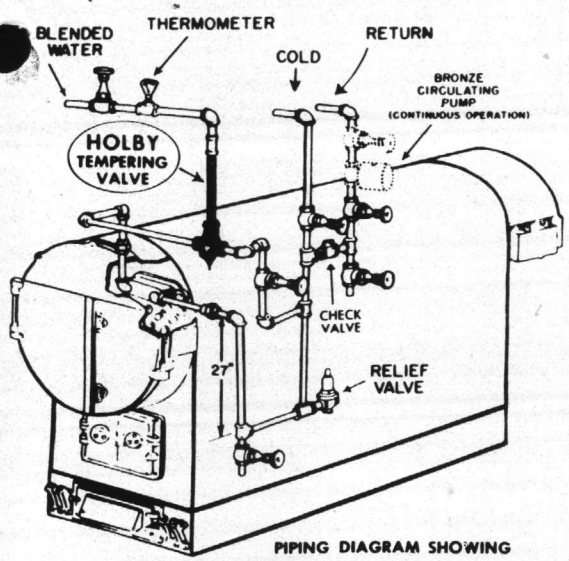

PIPING DIAGRAM SHOWING
HOLBY TEMPERING VALVE
IN A VERTICAL* POSITION CONTROLLING THE TEMPERATURE OF HOT WATER DELIVERED BY A SUBMERGED TANKLESS WATER HEATER

*CAN BE INSTALLED IN ANY POSITION

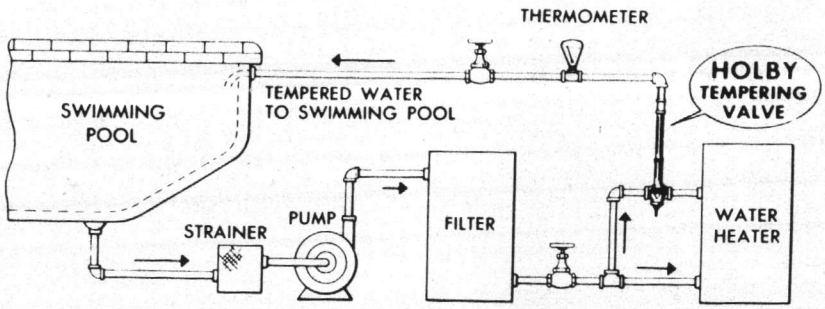

PIPING DIAGRAM SHOWING
HOLBY
TEMPERING VALVE AS USED WITH HEATER FOR SWIMMING POOLS

NOTES:
WHEN ORDERING SPECIFY FOR LOW TEMPERATURE OPERATION
FOR ALL OTHER SWIMMING POOL EQUIPMENT, FOLLOW MANUFACTURERS INSTRUCTIONS

PIPING DIAGRAM SHOWING
HOLBY TEMPERING VALVES
AS USED TO CONTROL THE REQUIRED TEMPERATURES TO SUPPLY THE DIFFERENT TYPES OF HEATING UNITS* TO THE VARIOUS ZONES IN A HYDRONIC HEATING SYSTEM, ALSO AS USED FOR THE DOMESTIC HOT WATER SUPPLY AND SNOW MELTING SYSTEMS

PROVIDE REQUIRED PIPING AND ACCESSORIES FOR FILLING OF SYSTEMS, FLOW CONTROL, EXPANSION AND AIR ELIMINATION

***WHEN ORDERING* FOR TEMPERATURES LOWER THAN 120° F *SPECIFY:* HOLBY TEMPERING VALVES FOR LOW TEMPERATURE OPERATION**

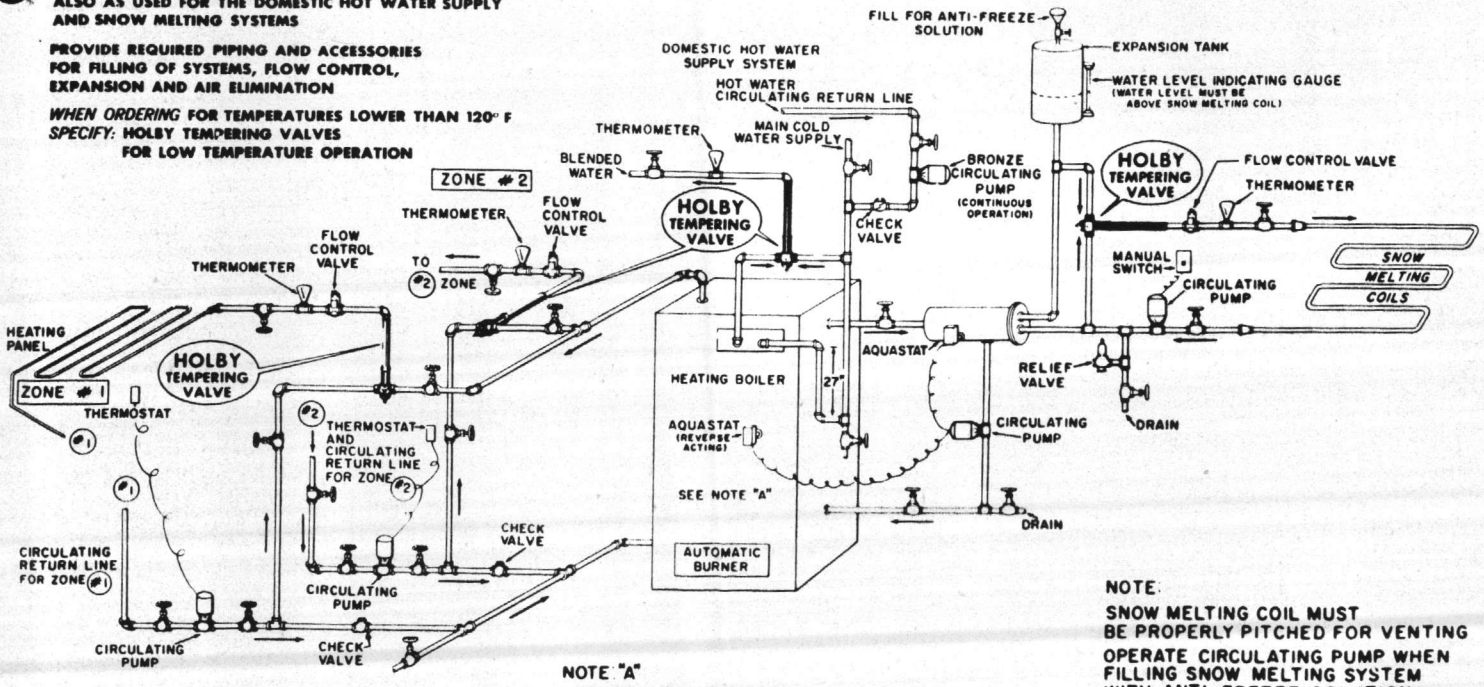

NOTE:
SNOW MELTING COIL MUST BE PROPERLY PITCHED FOR VENTING
OPERATE CIRCULATING PUMP WHEN FILLING SNOW MELTING SYSTEM WITH ANTI-FREEZE SOLUTION

NOTE "A"
REVERSE ACTING AQUASTAT TO STOP CIRCULATING PUMPS WHEN TEMPERATURE IN BOILER DROPS BELOW TEMPERATURE REQUIRED FOR THE DOMESTIC HOT WATER SUPPLY SYSTEM
(CONNECTED TO BREAK LIVE WIRE TO PUMPS)

*RADIATORS, COILS, BASEBOARD RADIATION, LOW TEMPERATURE FLOOR AND CEILING PANEL GRIDS, ETC.

ADDITIONAL ZONES CAN BE ADDED

NOT TO SCALE

PIPING DIAGRAMS FOR OTHER USES AND APPLICATIONS AVAILABLE ON REQUEST

Temperature of water before entering the HOLBY TEMPERING VALVE

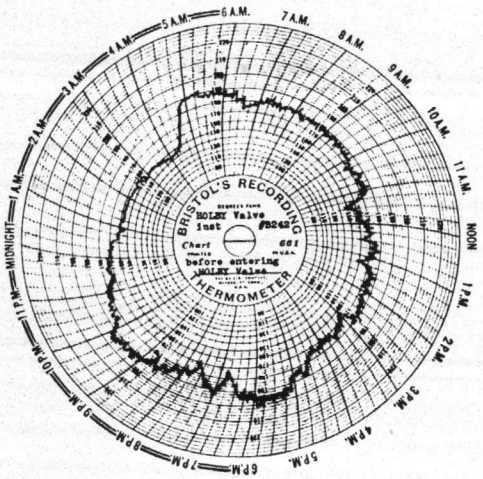

Temperature of water after leaving the HOLBY TEMPERING VALVE

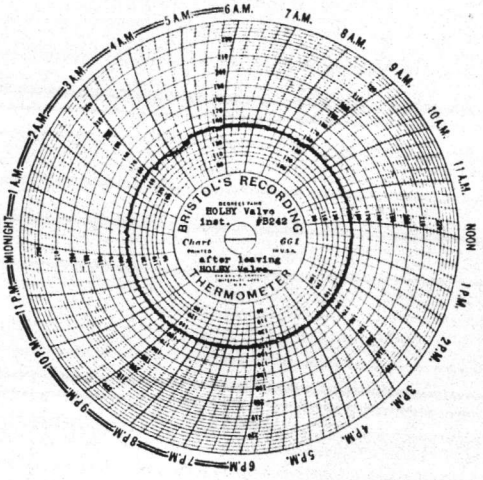

DIMENSIONS

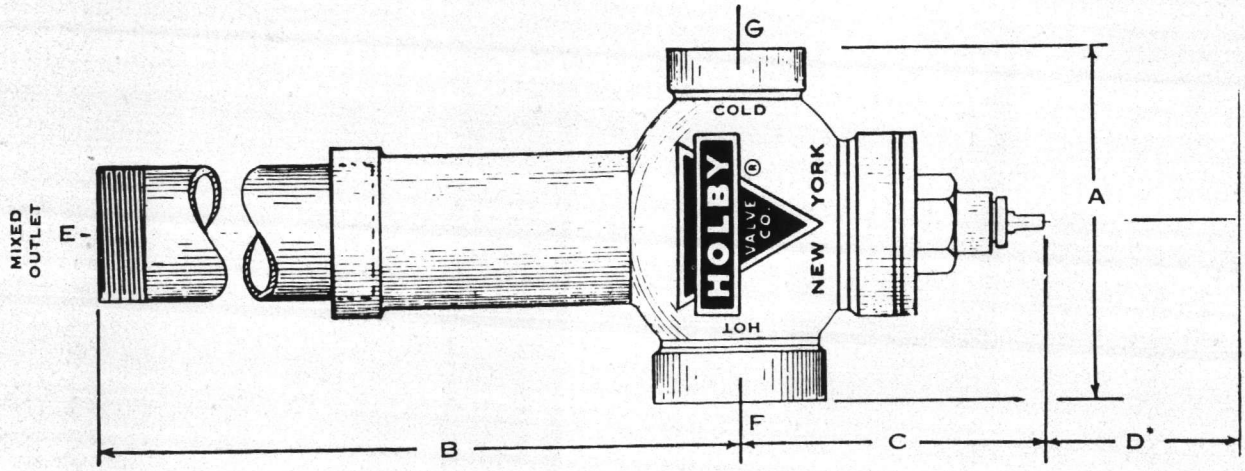

SIZE	A	B	C	D*	STANDARD PIPE TAP E MIXED OUTLET	F HOT INLET	G COLD INLET	SHIPPING WEIGHTS
½"	4¼"	8"	3¼"	6"	½"	½"	½"	7 LBS.
¾"	4¼"	8"	3¼"	6"	¾"	¾"	¾"	7 LBS.
1"	4¼"	11¼"	4¼"	12"	1"	1"	1"	8 LBS.
1¼"	4¾"	19"	4½"	15"	1¼"	1¼"	1"	14 LBS.
1½"	5½"	23"	5"	20"	1½"	1½"	1¼"	17 LBS.
2"	6⅜"	25"	6"	20"	2"	2"	1½"	25 LBS.
2½"	7½"	27¾"	6½"	24"	2½"	2½"	2"	40 LBS.
3"	9"	29⅛"	7"	24"	3"	3"	2½"	59 LBS.
4"	10¼"	31"	8"	24"	4"	4"	4"	95 LBS.

*NOTE: "D" is clearance required for regulating and servicing

GUARANTY

We guarantee each new HOLBY TEMPERING VALVE to be free from defects in material and workmanship for a period of one year from date of installation. Any HOLBY TEMPERING VALVE or part, returned to us carriage prepaid, will, if found defective upon our examination, be repaired or replaced, without charge. All carriage charges to be paid by the customer.

For this guarantee to be effective, installation must be properly made according to our piping recommendations. We will not be responsible for any incidental damage or labor caused by defective material.

For the proper installation of the HOLBY TEMPERING VALVE for any special application, please obtain our piping diagrams.

A VALVE TO CONTROL THE TEMPERATURE OF HOT WATER SYSTEMS

Form 14 11/78-20M

PRINTED IN U.S.A.

HANG NEAR HOLBY TEMPERING VALVE

HOLBY VALVE CO.

INSTRUCTIONS
for Installing and Adjusting
HOLBY TEMPERING VALVE

This valve can be installed and will operate satisfactorily in any position. For best results however, for natural gravity circulation (without circulation pump) it is recommended that it be installed in a vertical position with the outlet on top, or in a horizontal position with the hot and cold inlets on a horizontal plane. In this way there will be no trap to interfere with circulation.

The cold water line should have a MINIMUM TWENTY-SEVEN (27) INCH DROP in it before it enters the tankless water heater, to prevent backing up of hot water during periods when no water is being used. The circulating return line should be installed in such a manner that it can go to, and enter, the cold water inlet side of the HOLBY TEMPERING VALVE, and also back to the source of the hot water supply.

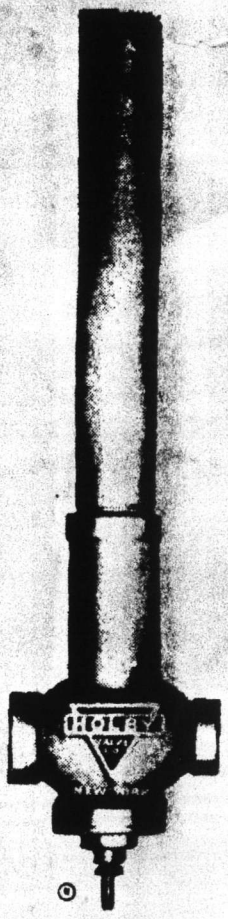

To adjust the HOLBY TEMPERING VALVE, the adjusting screw should be turned all the way in. Check the circulating return line. If the temperature of the water is hotter than the desired outlet temperature from the HOLBY TEMPERING VALVE, the return line should be shut off until it has sufficiently cooled down. Open a hot water faucet, supplied by the HOLBY TEMPERING VALVE, turn on the cold water to the HOLBY TEMPERING VALVE first, where possible, then the hot water. Note the temperature of the water on the thermometer. Turn the adjusting screw left, or counter-clockwise, and wait a few minutes to note results. Repeat until a satisfactory temperature is obtained.

When adjusting the valve, turn the adjusting screw on the

- ½ inch valve, ¾ inch valve, 1 inch valve, 1¼ inch valve — ⅛ to ¼ turn at a time
- 1½ inch valve, 2 inch valve — 1 to 2 turns at a time
- 2½ inch valve, 3 inch valve, 4 inch valve — 2 to 3 turns at a time

The water must be supplied to the valve at a HIGHER temperature than that for which the valve is set, otherwise no regulation will take place. If the temperature of the water does not rise when adjusting screw is turned to the left, make sure that the water in the boiler is over 190°F and that the water in the boiler is above the top of the water heater in the boiler. Do not turn off the valve on the cold water feed to the tempering valve at night or any other time to increase the temperature at the outlet of the valve. If the water is not hot enough the cold water port in the tempering valve closes automatically. If the cold water feed valve is closed partly or entirely, proper regulation by the tempering valve is impossible and its more sensitive parts are unduly strained.

IMPORTANT: Cold water supply to the HOLBY TEMPERING VALVE should be opened before hot water is turned on.

Holby Valve Company, Inc.
1146 SECOND AVENUE • NEW YORK, N.Y. 10021
212 TEmpleton 8-6363

Installed by_____

Address_____ City and State_____

— SEE OTHER SIDE FOR TYPICAL INSTALLATIONS —

HOLBY TEMPERATURE REGULATING VALVE - TYPICAL INSTALLATIONS

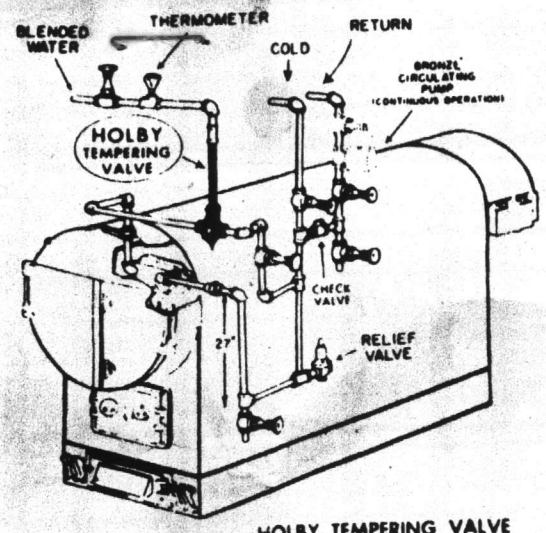

NOT TO SCALE

HOLBY TEMPERING VALVE
IN A VERTICAL* POSITION CONTROLLING THE TEMPERATURE OF HOT WATER DELIVERED BY A SUBMERGED TANKLESS WATER HEATER

*CAN BE INSTALLED IN ANY POSITION

NOTE:
FOR TEMPERATURES BELOW 120° F SPECIFY FOR LOW TEMPERATURE OPERATION

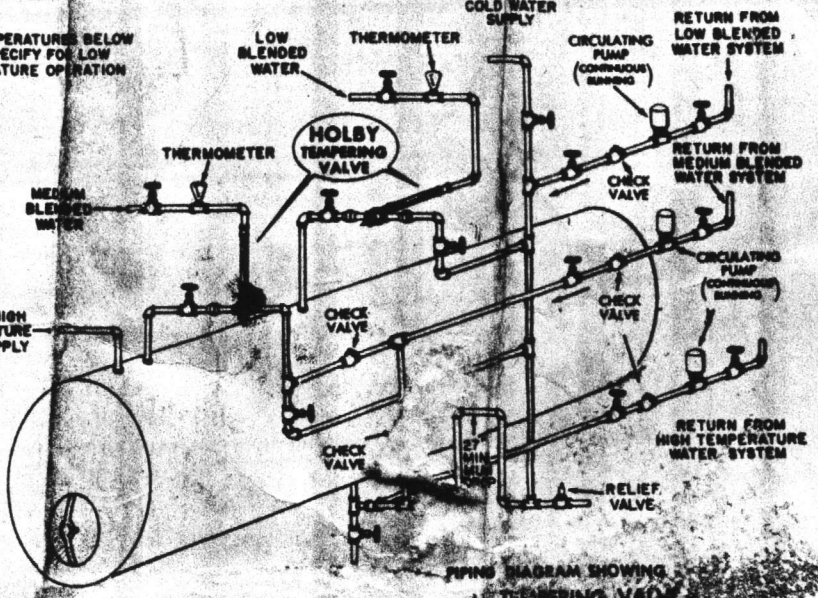

PIPING DIAGRAM SHOWING TEMPERING VALVE

NOT TO SC

AS USED

NOTE:
SNOW MELTING COIL MUST BE PROPERLY PITCHED FOR VENTING
OPERATE CIRCULATING PUMP WHEN FILLING SNOW MELTING SYSTEM WITH ANTI-FREEZE SOLUTION

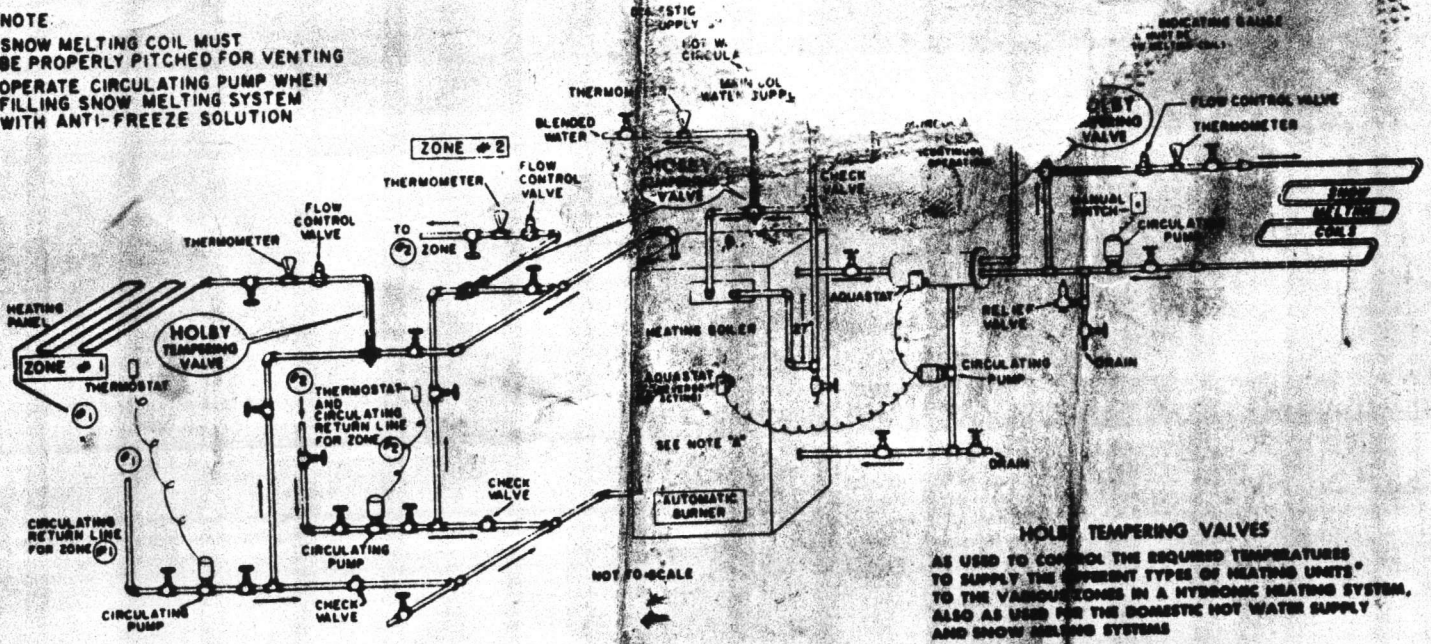

NOT TO SCALE

*RADIATORS, COILS, BASEBOARD RADIATION, LOW TEMPERATURE FLOOR AND CEILING PANEL GRIDS, ETC.

ADDITIONAL ZONES CAN BE ADDED

NOTE "A"
REVERSE ACTING AQUASTAT TO STOP CIRCULATING PUMPS WHEN TEMPERATURE IN BOILER DROPS BELOW TEMPERATURE REQUIRED FOR THE DOMESTIC HOT WATER SUPPLY SYSTEM
(CONNECTED TO BREAK LIVE WIRE TO PUMPS)

HOLBY TEMPERING VALVES
AS USED TO CONTROL THE REQUIRED TEMPERATURES TO SUPPLY THE DIFFERENT TYPES OF HEATING UNITS* TO THE VARIOUS ZONES IN A HYDRONIC HEATING SYSTEM, ALSO AS USED FOR THE DOMESTIC HOT WATER SUPPLY AND SNOW MELTING SYSTEMS

PROVIDE REQUIRED PIPING AND ACCESSORIES FOR FILLING OF SYSTEMS, FLOW CONTROL, EXPANSION AND AIR ELIMINATION

WHEN ORDERING FOR TEMPERATURES LOWER THAN 120° F SPECIFY: HOLBY TEMPERING VALVES FOR LOW TEMPERATURE OPERATION

GUARANTEE

We guarantee each new HOLBY TEMPERING VALVE and/or PART to be free from defects in material and workmanship for a period of one year, provided it has been purchased through our recognized normal channels of distribution. Any HOLBY TEMPERING VALVE or PART, returned to us carriage prepaid, will, if found defective upon our examination, be repaired or replaced, without charge. All carriage charges to be paid by the customer

For this guarantee to be effective, for each individual application, installation must be properly made according to our piping recommendations.

We will not be responsible for any incidental damage or labor caused by defective material.

For the proper installation of the HOLBY TEMPERING VALVE for any special application, please obtain our piping diagrams.

Within 10 days after installation of each new HOLBY TEMPERING VALVE, the enclosed registration card must be filled out and returned to us to make this guarantee effective.

H18A TYPICAL DIAGRAMS

OTHER USES AND APPLICATIONS AVAILABLE ON REQUEST

FOR INSTALLING and ADJUSTING INSTRUCTIONS, SEE OTHER SIDE

ITEM 11

J.J. FINNIGAN FLASH TANK

Supplied by: Morgan & Kirkman Associates, Inc.
P.O. Box 172
Fayetville, N.C. 28302
PH: (919) 484-5796

Parts can be furnished by
above supplier.

Installed by: Ramsey Air Conditioning, Inc.
P.O. Box 1333
Jacksonville, N.C. 28540
PH: (919) 455-0414

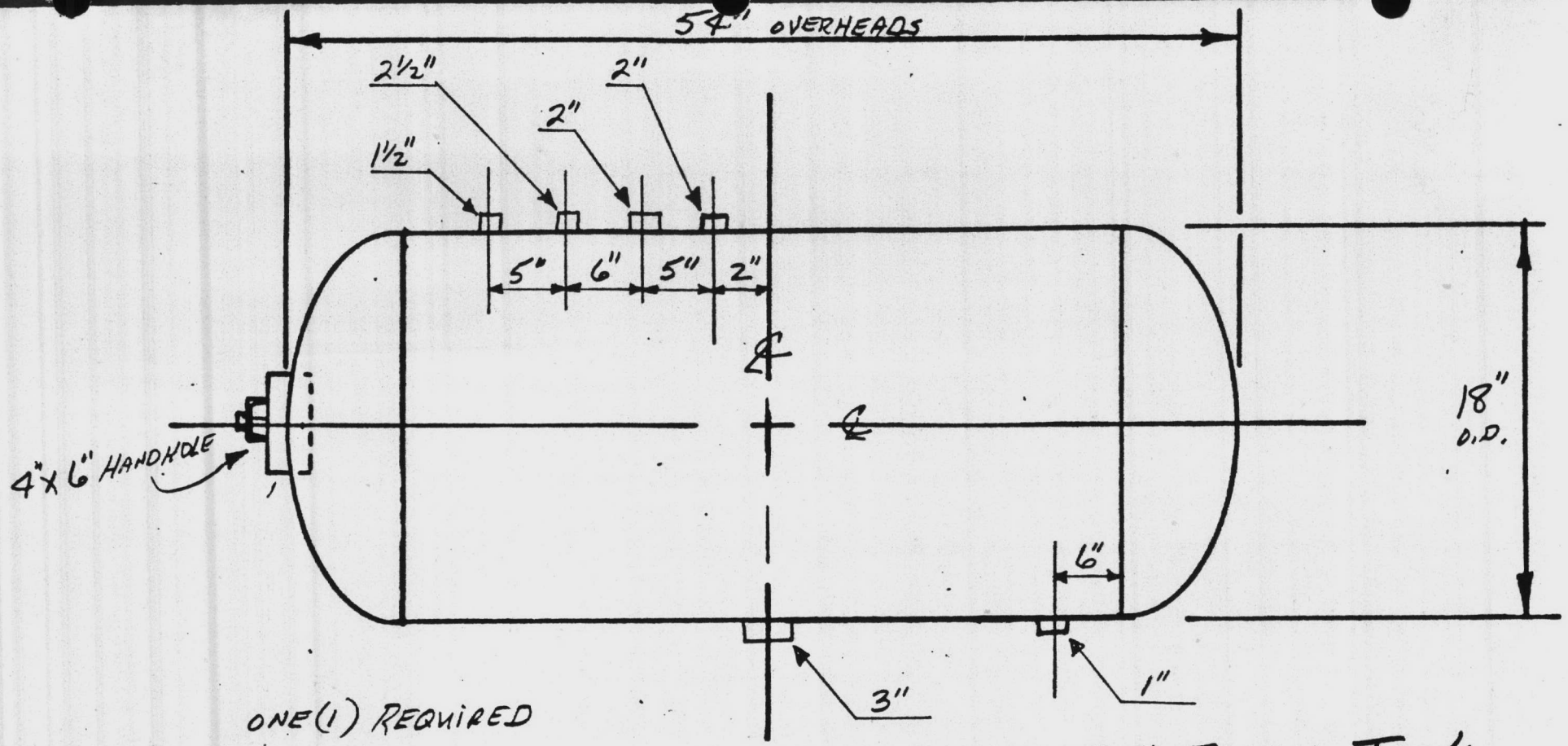

ONE (1) REQUIRED

18"x54" FLASH TANK

NOTES:

1. ASME STAMPED FOR 125# D.P. TEST AT 188#.
2. OUTSIDE PAINTED ONE SHOP COAT OF GRAY PRIMER.

PROJECT	ENLISTED MEN'S BARRACKS CAMP LEJEUNE, N.C.
CUSTOMER	RAMSEY AIR COND., INC.
SCALE – NONE	REVISIONS –
DATE – 3-24-84	DRAWN BY – MLC
J.J. FINNIGAN CO. INC.	ATLANTA 18 GEORGIA
CUSTOMER'S P.O. NUMBER	DRAWING NUMBER
0533	A-84 5740B

ITEM 12

SARCO PRESSURE REDUCING VALVES

Supplied by: Hoffman-Hoffman Inc.
P.O. Box 77258
Greensboro, N.C. 27417
PH: 1-800-632-0432

Parts can be furnished by above supplier.

Installed by: Ramsey Air Conditioning, Inc.
P.O. Box 1333
Jacksonville, N.C. 28540
PH: (919) 455-0414

spirax sarco

INSTALLATION INSTRUCTIONS

NO. 650-D73

JANUARY 1984

SPIRAX SARCO, INC. • 1951 26th ST. S.W. • P.O. BOX 119, ALLENTOWN, PA 18105 • PHONE 215 797-5830 • TELEX #84-7434

TYPE 25P, 25PA & 25PI PRESSURE REDUCING VALVES

INSTALLING THE VALVE

Unpack Carefully

Do not lift the regulator by the tubing. Grasp the body of the valve firmly when lifting. The valve is completely assembled with the exception of the pressure sensing line and sensing line fittings.

Piping

1. Typical hookup sketches as shown in Figs. 1 and 2 will aid in planning a correct installation.
2. Piping on the downstream side of the valve should be increased so as not to restrict flow.
3. Swage nipples are recommended for changes in pipe sizes.
4. Before installing the valve make sure the piping is free of foreign material, scale, etc.
5. Make certain the arrow cast on valve body is pointing in the direction of flow.
6. Valve should always be installed in a horizontal position. (See Figs. 1 and 2.)

Pilot Pressure Sensing Line

1. Copper tubing (5/16" OD) can be used for the sensing line with suitable compression fittings or as alternative 1/4" piping can be used.
2. Connect the sensing line to a straight portion of the piping 10 pipe diameters from nearest fitting downstream from the valve and approximately 1 foot from elbows, tees, valves and other restrictions. (See Figs. 1 and 2.)
3. When the reducing valve is serving a single piece of equipment, the sensing line can be connected to the steam space of the equipment.
4. Install a small gate valve in the sensing line so that this can be closed when servicing the regulator.
5. The sensing line must be pitched downward from the main valve to insure proper drainage.
6. To permit accurate setting of the pressure regulator, a pressure gage should be installed as close as possible to the pilot sensing line connection.

Bypass

1. A bypass connection, as shown in Figs. 1 and 2, is recommended so that the valve can be serviced without shutting down the equipment.
2. The bypass valve should be the same size as the pressure reducing valve.

Steam Line Drain Trap

1. To insure proper operation of the valve and avoid premature wear, it is recommended that a 1/2" Spirax Sarco Thermodynamic Steam Trap be installed on the steam supply line. (See Figs. 1 and 2.)
2. A steam trap should also be installed in the downstream piping at the heel of each rise and ahead of manual or automatic valve.

Pipeline Strainers

1. It is strongly recommended that strainers be installed before the reducing valve and steam traps.
2. Make certain adequate clearance is provided for screen removal and blowdown connection between strainer and valve body.

Stop Valves

All stop valves on the supply side, as well as on the downstream side of the pressure reducing valve and sensing line, should be of the gate type so as to insure full rated capacity and good control.

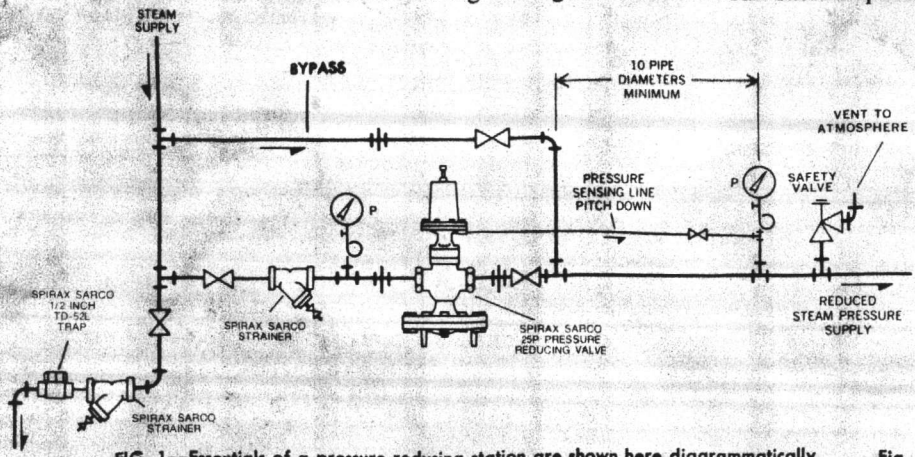

FIG. 1—Essentials of a pressure reducing station are shown here diagrammatically.

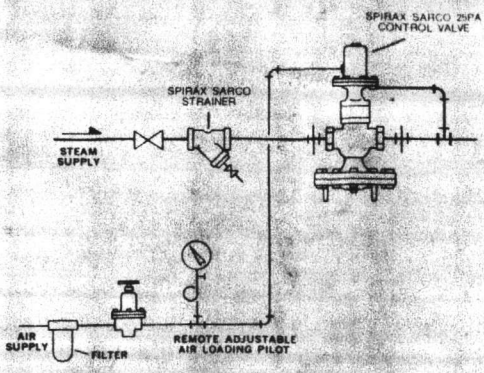

Fig. 1A—Reducing Steam Pressure Remotely Using 25PA Valve.

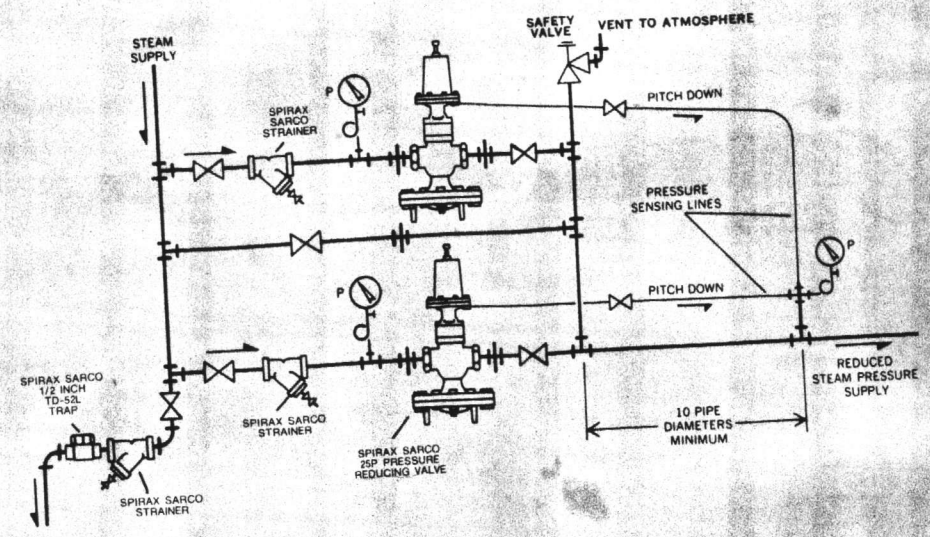

FIG. 2—In a parallel installation, two 25P reducing valves have slightly different pressure settings so that they open sequentially. Diagrammed here in a vertical arrangement, they are usually installed side by side.

HOW THE 25P, 25PA & 25PI WORK

Normal positions before start-up are with the main valve closed and the pilot valve held open by spring force or air pressure. Entering steam passes through the pilot valve into the main diaphragm chamber and also out through the control orifice. As flow through the pilot valve exceeds flow through the orifice, control pressure increases in the diaphragm chamber and opens the main valve. As steam flows through the main valve, the increase in downstream pressure feeds back through the pressure sensing line to the underside of the pressure diaphragm. When the force below that diaphragm balances the compression force of the spring above it, the pilot valve throttles. The control pressure maintained in the main diaphragm chamber positions the main valve to deliver just enough steam for the desired delivery pressure. Adjustment of the spring or air pressure above the pressure diaphragm changes the downstream pressure set point. When steam is no longer required, the Sensing Line pressure increases closing the pressure pilot and the control pressure bleeds back through the control orifice. This allows the main valve to hold the desired reduced pressure and it may close tight for a dead-end shutoff.

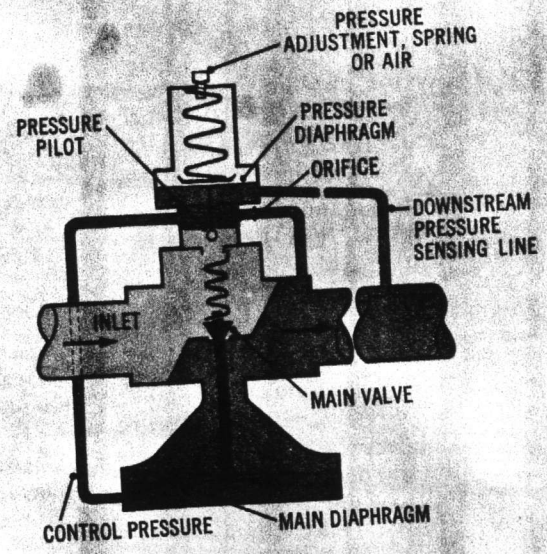

START-UP

1. First make certain that all stop valves are closed.
2. Remove Pilot Spring Cover then turn the pressure pilot adjustment (2D) counter-clockwise until spring is slack. Make certain spring remains in vertical position and centered in its retainers.

   Air loaded PA pilots must have no air pressure supplied to them.
3. Open stop valves in the following order:
   a. Open stop valve ahead of steam trap on steam supply line. This will insure water free steam at the regulator inlet when put into operation.
   b. Open small gate valve on pressure sensing line.
   c. Open downstream stop valve.
   d. Slowly open inlet stop valve.
4. Slowly adjust pilot spring at (2D) turning clockwise until reduced pressure required is indicated on pressure gage downstream of valve.

   Air loaded PA pilots require an air loading-pressure approximately equal to the desired reduced pressure.
5. Once the system has stabilized itself it may be necessary to make a re-adjustment of pilot spring (2D). Replace spring cover then tighten adjustment locknut.
6. Important—Retighten all pilot flange connections to insure steam tight joints.

TROUBLE SHOOTING

REFER TO FIGS. 4, 5 & 6

Symptom	Cause	Check and Cure
1. Controlled pressure over shoots under normal load conditions.	1. (a) Dirt or foreign material between pilot valve seat and head.	1. (a) Loosen screw (2D). Remove copper tubing connections at (J & L). With steam on valve, if steam flows from copper tubing connections at (J & L) remove pilot head and seat assembly (2H) and clean or replace.
	(b) Foreign particles between main valve head and seat.	(b) Inspect and clean head and seat.
	(c) Orifices (B) or (H) or pressure sensing line may be plugged.	(c) Remove, inspect, and clean.
2. Controlled Pressure over shoots only on light loads.	2. (a) Main valve head and seat worn or dirt between them.	2. (a) Inspect and clean head and seat.
	(b) Valve may be severely oversized.	(b) Adjust screw (2D) to give desired pressure under light loads.
	(c) Bypass valve not shut tightly or leaking.	(c) Check and repair as required.
	(d) Dirt or foreign material on main valve stem and guide (1F).	(d) Remove, inspect and clean.
3. Valve fails to open.	3. (a) Main valve diaphragm ruptured.	3. (a) Unscrew copper tubing connection at (G) and crack bypass valve. If steam flows from main valve diaphragm case, diaphragm is defective and must be replaced.
	(b) Orifice (H) is plugged.	(b) Remove and clean.
	(c) Pilot valve seat is plugged with dirt.	(c) Remove head and seat assembly (2H). Inspect and clean or replace.
	(d) Screen (1D) is plugged.	(d) Inspect screen and clean.
	(e) Pipeline strainer blocked.	(e) Inspect and clean.
	(f) Pilot valve adjustment (2D) or air loading pressure not properly adjusted.	(f) Adjust screw (2D) to desired pressure. Check air supply to PA pilots.
4. Delivery pressure low.	4. (a) Pilot valve adjustment (2D) not properly adjusted.	4. (a) Adjust screw (2D) to desired pressure.
	(b) Valve undersized.	(b) Check actual load against valve rating.
	(c) Steam supply pressure too low.	(c) Check and correct.
	(d) Main valve diaphragm ruptured.	(d) Unscrew copper tubing connection (G) and crack bypass valve. If steam flows from diaphragm case, diaphragm is defective and must be replaced.
	(e) Bleed orifice (B) missing.	(e) Replace proper fitting.
5. Valve fails to close.	5. (a) By-pass valve open or leaking.	5. (a) Check and repair as required.
	(b) Pilot sensing line blocked (or not installed).	(b) Remove, inspect, clean or install.
	(c) Pilot diaphragm ruptured (water or steam coming from pilot at spring retainer area).	(c) Replace pilot diaphragm assembly.
	(d) Pilot assembly or main valve seat threads leaking.	(d) Check casting in seat area for erosion.
	(e) Main valve disphragms re-assembled without return spring and main valve cover holding valve head closed. (1/2" thru 4" sizes only).	(e) With main valve cover installed, loosen all main valve diaphragm bolts (1C) and then re-tighten.

MAINTENANCE

GENERAL INSPECTION

While a program of planned maintenance is always to be recommended, the Sarco 25P Valve will give long and trouble-free service if correctly selected, installed and kept reasonably free of dirt and foreign matter. Dirt and foreign matter are most likely to collect during installation and later trouble can be avoided by inspecting the installation after a few days. Check the following:

1. Clean all pipeline strainers. (Remove screens to clean.)
2. Check the main valve seat (1E) and protective screen (1D).
3. Inspect and clean orifices (B) and (H).
4. Check all joints for leakage.

SERVICING PROCEDURE (Refer to Fig. 4)

To determine which part of a malfunctioning pressure reducing valve requires maintenance, refer to the trouble-shooting chart and follow this servicing procedure to check the tightness of the seats.

1. With all stop valves closed and the valve cooled down, remove the copper tubing from connectors (J) and (L) being careful to not bend them.
2. Close the pilot valve (2H) by turning the pressure adjustment (2D) counter-clockwise until the spring is slack. (No air pressure supplied to the type PA pilot.)
3. Stand clear of the tubing connectors and open the inlet stop valve slightly so that a small amount of steam reaches the valve inlet and pilot.
4. Open and close the pilot valve a few times by turning the pressure adjustment (2D) and observe the steam flow from tubing connectors (J) and (L). When the pilot valve is closed there should be no steam flow from the connectors; if there is some steam flow it indicates that the pilot valve assembly (2H) is faulty and must be replaced.
5. With the copper tubing removed the main valve head and seat are held closed and should not pass any steam. Observe the downstream orifice connector (B). Steam flow from this connector indicates that the main valve head and seat are leaking and require servicing.

Inspecting and Replacing Pilot Valve Head and Seat. (Refer to Fig. 4)

1. Remove 4 Pressure Pilot Flange cap screws and lift off pressure pilot. Visual examination can be made of the pilot valve head and seat.
2. Pilot valve head and seat are contained in one complete assembly. (See Fig. 4.)
3. To remove head and seat assembly (2H), unscrew hexagon, using 11/16″ hex wrench.
4. If it is found that either the head or seat is worn, the entire assembly should be replaced.

Inspecting and Replacing Pilot Head Stem Guide. (Refer to Fig. 4)

The important thing to check is to make sure that the pilot head stem moves freely through the guide. This can be determined by removing the complete pilot from the main valve and turning adjustment (2D) so as to move the head to an open and closed position. Should cleaning or replacement be required proceed as follows:

1. Remove the pilot diaphragm cap screws (2C).
2. Remove pilot yoke (2B) and pilot diaphragm (2F).
3. The stem seal assemby can then be removed with a 7/8″ hex socket wrench.

Inspecting and Replacing Pilot Valve Diaphragms. (Refer to Fig. 4)

1. Turn adjustment screw (2D) counterclockwise until spring is slack. Air loaded PA pilots must have no air pressure supplied to them.
2. Remove cap screws (2C). Pilot yoke (2B) can then be removed.
3. The 2 metal diaphragms (2F) can then be inspected for distortion or possible fracture as a result of abnormal operation.
4. At the same time any accumulation of dirt or foreign material should be removed from the lower diaphragm pilot case.
5. When replacing diaphragms, make certain casting surface is clean to insure a steam tight joint. Application of a plastic compound on the casting surface, such as Garlock 101, is recommended.
6. Position pilot yoke on lower diaphragm pilot casting making certain that the yoke is properly centered.
7. Tighten all cap screws uniformly.

VALVE SIZES 1/2″ THRU 4″

Inspecting and Replacing Main Valve Head and Seat. (Refer to Figs. 4 and 5)

1. Unscrew copper tubing connections at (J) and (L).
2. Remove main valve cover cap screws (1A).
3. Remove main valve cover, strainer screen (1D), spring support disc and head spring.
4. Head can then be removed by simply withdrawing with a pliers or similar tool.
5. Inspection should then be made to determine if scale or other foreign material prevented tight closure of the head and seat.
6. If the head or seat shows signs of wear this can be corrected by grinding, using a fine grinding compound (400 grit) providing the wear is not too severe. Check for body erosion.

7. If it is necessary to replace the valve seat, this can be removed from the valve body using a standard hexagon socket. (Valve sizes 1/2" to 2".) When replacing the valve seat, a new gasket should be used to insure a tight joint.
   2-1/2" thru 6" valves contain raised lugs for removal and seal metal-to-metal without a gasket. Replacement heads and seats should be lapped in.

VALVE SIZES 1/2" THRU 4"

Inspecting and Replacing Main Valve Diaphragms. (Refer to Figs. 3, 4 and 5)

1. Unscrew copper tubing connection at (G).
2. Remove main valve diaphragm bolts (1C).
3. This will allow the lower diaphragm case to be removed.
4. The 2 metal diaphragms (1H) should be inspected to insure that they have not become distorted or possibly fractured as a result of abnormal operating conditions.
5. At the same time any accumulation of dirt or foreign material should be removed from the diaphragm case.
6. The valve stem should also be checked to make sure it is free to move and that there is no scale or foreign material lodged in the guide bushing (1F).
7. **Before reassembling diaphragms in 1/2" thru 4" sizes, main valve head must be in place and held in a closed position with the return spring and main valve cover.**
8. Make certain pressure plate (1G) is set properly, (Refer to Fig. 3.)
9. Care should be taken in centering the diaphragms properly and equalizing bolt take-up uniformly.

6" VALVE ONLY

Inspecting and Replacing Main Valve Diaphragms, Seat, and Head Assembly (Refer to Fig.6).

Diaphragms

1. Unscrew copper tubing connections (G) to lower diaphragm chamber.
2. Remove main valve diaphragm bolts (1C) and drop lower diaphragm case.
3. The 2 metal diaphragms (1H) should be inspected and replaced if they have become distorted or fractured.
4. Clean any accumulation of dirt from the diaphragm case and orifice (H).

Servicing the Main Valve Head and Seat.

5. Loosen the diaphragm plate set screw and remove the diaphragm plate (1G).
6. Remove the top cover bolts (1A) and cover.
7. Remove the stem and head assembly from the valve. Inspect the head and seat for wear.
8. Check for body erosion around the seat ring.
9. Replacement seats and heads should be lapped in, and minor wear can also be corrected by lapping with 400 grit compound.
10. On re-assembly be sure diaphragm plate (1G) is set at 27/64" and set screw securely tightened.

NOTE: For replacement parts refer to Spirax Sarco Parts List No. P19.

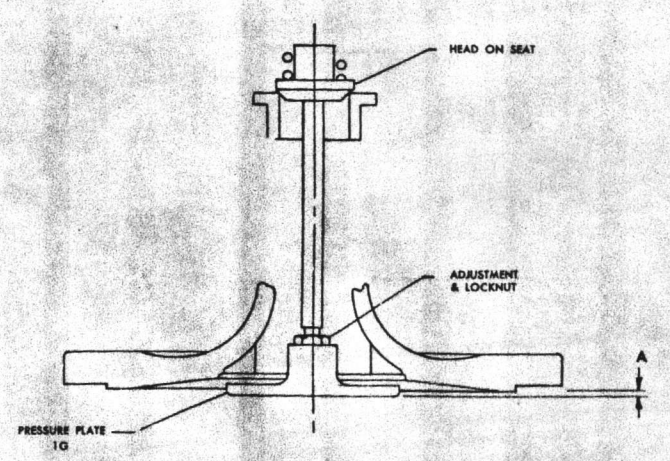

FIG 3.—NOTE IN 1/2" THRU 4" SIZES, TOP OF VALVE MUST BE COMPLETELY ASSEMBLED AND HEAD MUST BE ON SEAT WHEN MEASURING DIMENSION "A" AND WHEN RE-ASSEMBLING DIAPHRAGMS.

Size	1/2" & 3/4"	1"	1 1/4" & 1 1/2"	2"	2 1/2"	3"	4"	6"
Dim. A	1/16"	5/64"	3/32"	1/8"	13/64"	13/64"	1/4"	27/64"

½" THRU 2" SIZES

NOTE—In the PA pilot, air loading pressure replaces the adjustment screw (2D) and spring.

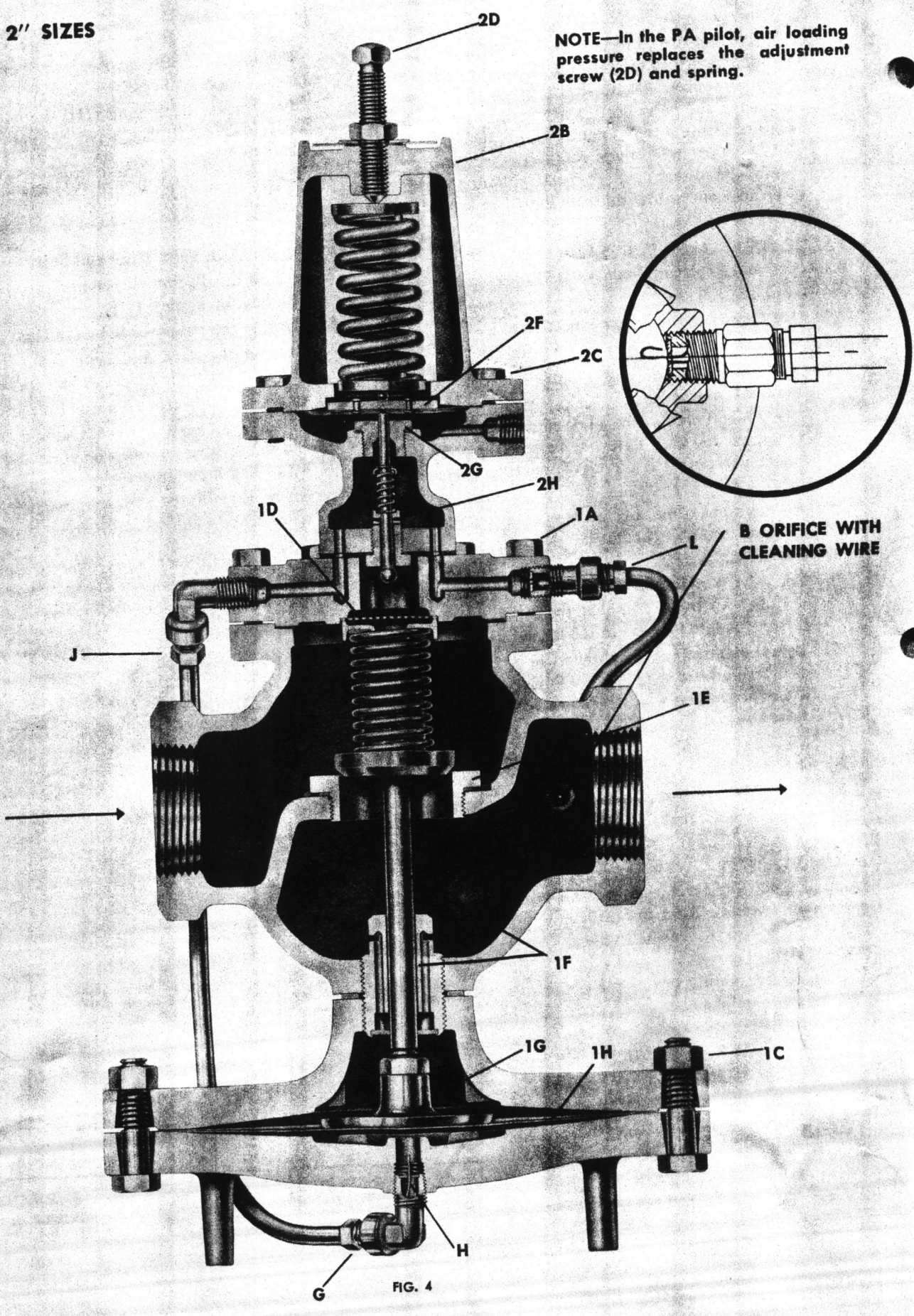

FIG. 4

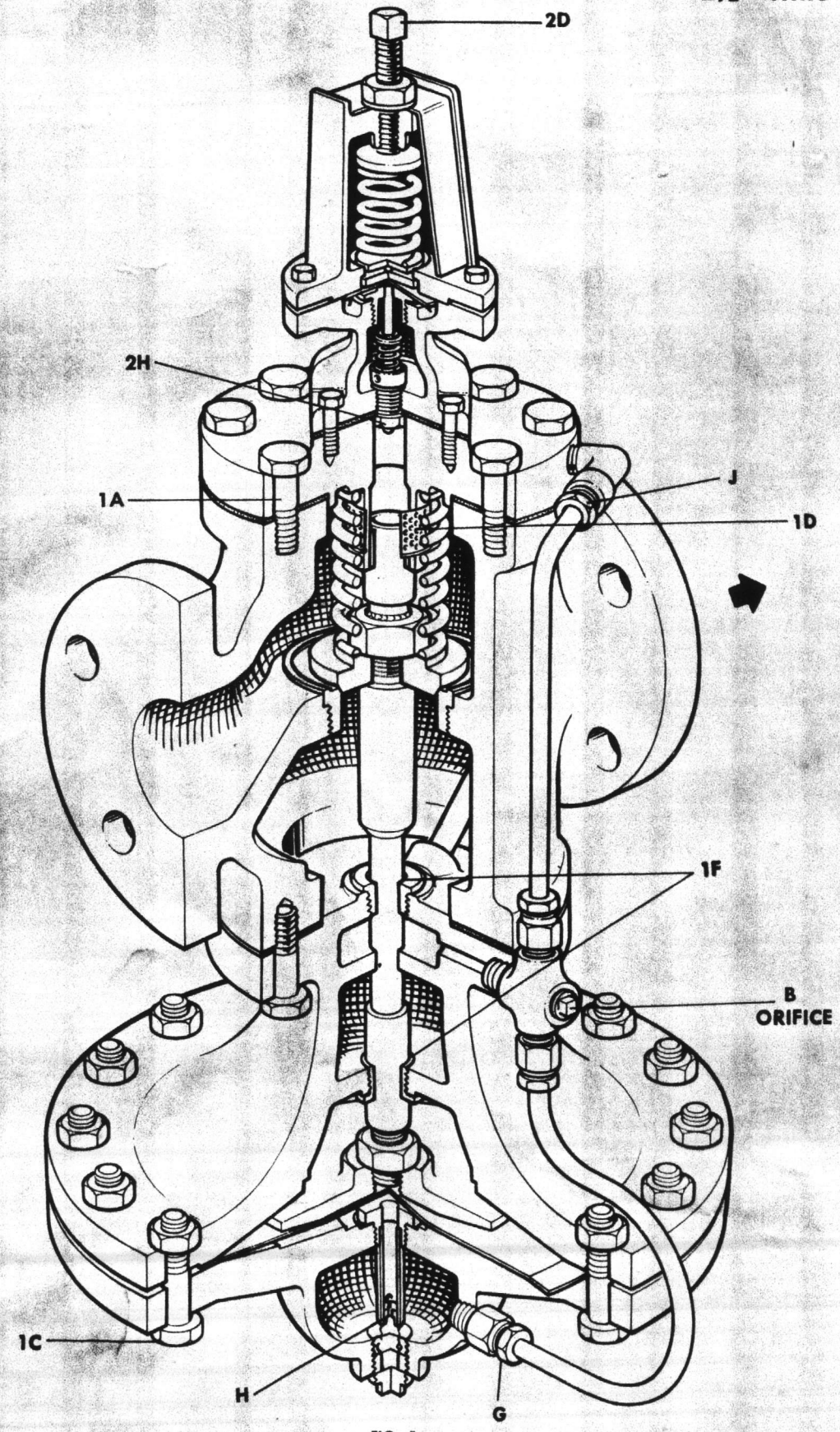

FIG. 5

6" SIZE

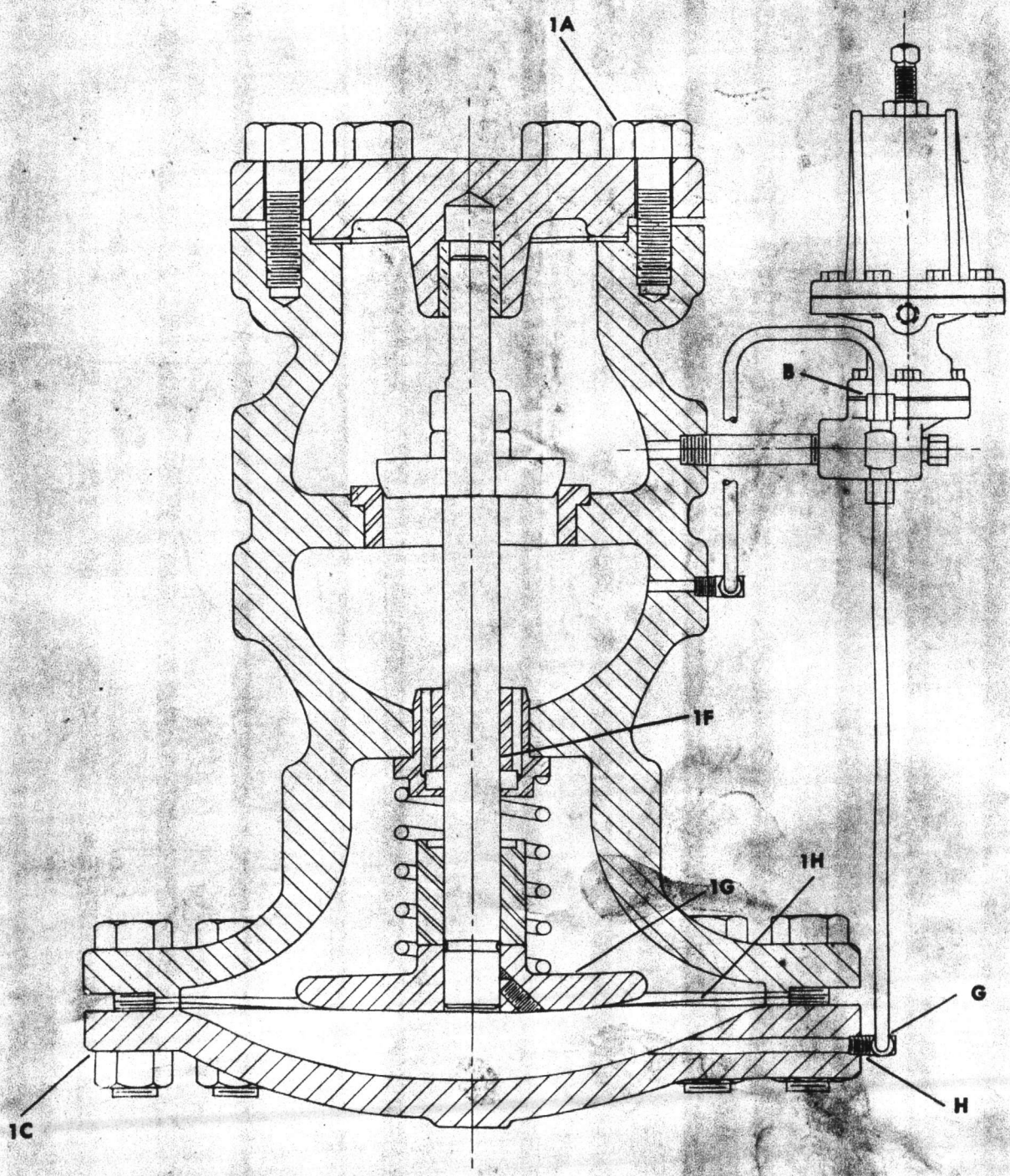

Fig.6

spirax sarco

SPIRAX SARCO, INC
1951 26TH ST S.W. • P.O. BOX 119, ALLENTOWN, PA 18105
PHONE (215) 797-5830 TELEX 84-7434

GPS 15M Printed in U.S.A.

ITEM 13

ZOELLER SUMP PUMPS

Supplied by: Ferguson Enterprises, Inc.
P.O. Box 3037
Wilmimgton, N.C. 28406
PH: (919) 343-1510

Parts can be furnished by above supplier.

Installed by: Ramsey Air Conditioning, Inc.
P.O. Box 1333
Jacksonville, N.C. 28540
PH: (919) 455-0414

"Quality Pumps Since 1939"

ZOELLER CO.

3280 Old Millers Lane
P.O. Box 16347 • Louisville, Kentucky 40216
(502) 778-2731

COMPARE THESE FEATURES

- Vortex impeller design.
- Durable cast construction. Cast switch case, motor and pump housing, base and impeller. No sheet metal parts to rust or corrode.
- Stainless steel screws, float rod, guard, handle and arm and seal assembly.
- Float operated submersible (NEMA 6) mechanical switch.
- Oil filled motor-hermetically sealed.
- Entire unit pressure tested after assembly.
- Automatic reset thermal overload protection.
- Carbon and ceramic shaft seal.
- Water tight neoprene "□" ring between motor and pump housing.
- Maximum temperature for effluent or dewatering—130° F. - 54° C.
- 60 cycles, 1525 RPM.
- Passes ½ inch solids (sphere).
- No screens to clog.
- Standard cord length 15' (UL listed).
- 1½" NPT Discharge.
- On point—8".
- Off point—2½".
- Major width—10".
- Height—10¾".

SIMPLEX AND DUPLEX SYSTEMS AVAILABLE

PACKAGED SYSTEMS AVAILABLE

ZOELLER CO.

3280 Old Millers Lane
P.O. Box 16347
Louisville, Kentucky 40216
(502) 778-2731

Manufacturers of . . .

"Quality Pumps Since 1939"

"97" Series

"FLOW MATE"

FOR SEPTIC TANK SYSTEMS

EFFLUENT

OR DEWATERING PUMP

SUBMERSIBLE

1½" NPT DISCHARGE

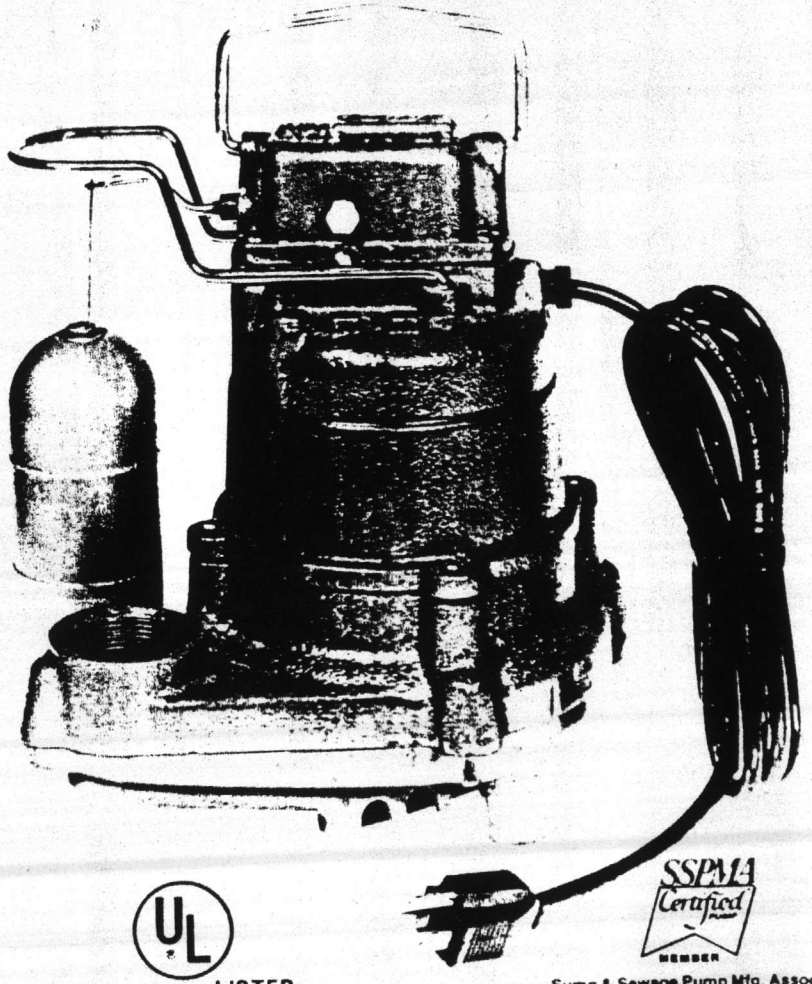

UL LISTED

SSPMA Certified MEMBER

Sump & Sewage Pump Mfg. Assoc.
SSPMA Specification
Number
97 Series SC-2225

MODELS AVAILABLE

- Automatic or Non-Automatic
- ½ H.P., 1 Ph. 115V or 230V.

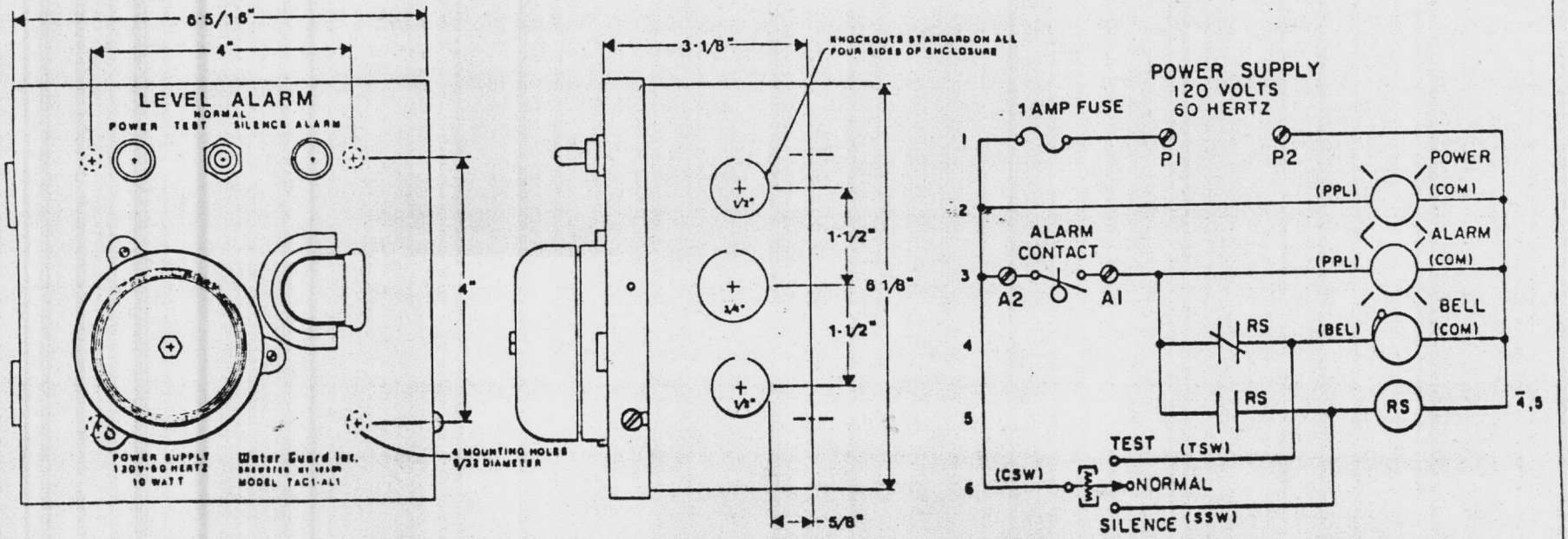

EXTERNAL CONNECTIONS

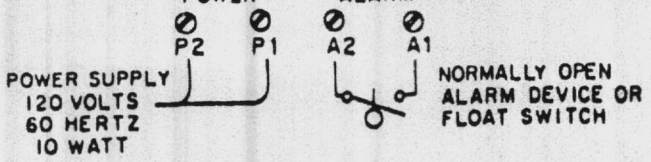

REV	DATE	Water Guard Inc. Brewster NY 10509
		STANDARD ALARM PANEL MODEL TAC 1-AL1-T INSTALLATION DRAWING
		37-0016 sht 1 of 1 | B | 1-10-84

ITEM 14

MCQUAY FAN COIL UNITS

Supplied by: Hoffman & Hoffman, Inc.
P.O. Box 77258
Greensboro, N.C. 27417
PH: 1-800-632-0432

Parts can be furnished by above supplier.

Installed by: Ramsey Air Conditioning, Inc.
P.O. Box 1333
Jacksonville, N.C. 28540
PH: (919) 455-0414

BULLETIN IM-129
MARCH 1970

INSTALLATION AND
MAINTENANCE DATA

McQUAY GROUP

THINLINE II Seasonmaker® FAN-COIL UNITS

FLOOR, BASIC & CEILING
TYPES TSF, TSB &TSC

INSTALLATION

Examine unit for shipping damage.

1. Rotate fan wheels by hand to make sure the wheels are free.
2. Unit is ready for installation.
3. Secure unit in proper position. Unit must be level to assure proper drainage and operation.
4. Water or refrigerant and drain connections can now be made to the unit. Piping must be installed in accordance with local codes and regulations. If solenoid valves are used, it is recommended that a strainer be installed ahead of the valve to eliminate foreign matter which may affect proper closing of the valve.
5. Vent the coils.
6. All water and refrigerant lines should be well insulated to prevent sweating and heat loss.
7. Electrical connections can now be made to the unit. Wiring must be in accordance with local codes and regulations. Proper fuse protection should be provided. Motor is thermally protected. If an electrical control package has been factory furnished, which requires a special wiring diagram, it has been forwarded to the equipment purchaser.
8. If the solid state fan control is to be wall mounted, the electrical junction box is to be furnished by the contractor and installed in the most convenient place.
9. Wiring Diagrams:

REMOTE MOUNTED FAN CONTROL

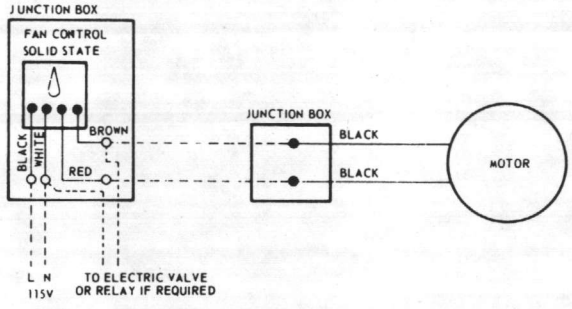

UNIT MOUNTED FAN CONTROL

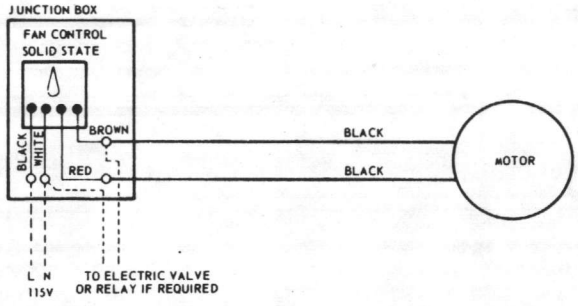

10. All windows and doors should be in and closed before starting up the unit.
11. During summer construction, there is an unusually high amount of moisture in the air, therefore, the initial pulldown should be very gradual – (High speed for maximum air flow with reduced GPM and elevated chilled water temperature for reduced capacity). If this is done, it will prevent the possibility of the unit sweating.

MAINTENANCE

1. Filters must be clean to obtain maximum performance. Throwaway type can be obtained from McQuay, Inc., cleanable filters should be washed in hot soapy water.
2. The motor has been oiled at the factory. It is not necessary to oil the first year when under continuous operation. (Approximately 10,000 hours.) Oil once a year with 8cc (1 Tsbp.) per bearing of SAE #20 non-detergent oil (Texaco-Regal Oil PCR & 0; Standard Oil #30 or equal.) Do Not Over Lubricate.
3. If motor service is required, it can be removed in in the following manner:
   A. Disconnect electrical power to the motor.
   B. Remove bottom half of the fan housing.
   C. Remove clips that hold motor in motor base.
   D. Remove the motor.
4. On TSF or TSB units equipped with 25% back fresh air intake, the insect screen may be removed for cleaning by lifting the intake box slightly and pulling it out.

REPLACEMENT PARTS

When writing for service or replacement parts, direct your letters to McQuay, Inc., Service Department and refer to the model number and the serial number of the unit as stamped on the serial plate attached to the unit. If replacement parts are required, give the date of the unit installation and the date of the failure. Also, give description of replacement parts and explanation of malfunction.

ITEM 15

MCQUAY UNIT HEATERS

Supplied by: Hoffman & Hoffman, Inc.
P.O. Box 77258
Greensboro, N.C. 27417
PH: 1-800-632-0432

Parts can be furnished by
above supplier.

Installed by: Ramsey Air Conditioning, Inc.
P.O. Box 1333
Jacksonville, N.C. 28540
PH: (919) 455-0414

HORIZONTAL UNIT HEATER
TYPE UHH
INSTALLATION OF DOUBLE DEFLECTION LOUVERS

BULLETIN NO. IM 214
SEPTEMBER 1978
INSTALLATION AND MAINTENANCE DATA

UNCRATING

When the equipment is received all items must be carefully checked against the bill of lading to be sure all cartons have been received. Visible or concealed damage should be reported immediately to the carrier and a claim filed with him for damage.

INSTALLATION

Installation is to be performed only by qualified personnel who are familiar with local codes and regulations and experienced with this type of equipment.

CAUTION: Sharp edges are potential injury hazard. Avoid contact.
WARNING: Before installing any accessory, disconnect the electrical power to avoid electrical shock or injury from rotating parts.

DOUBLE DEFLECTION LOUVERS

1. Remove single deflection louvers by removing the screw on each end of the louver (see Fig. 1).
2. Position the double deflection louver assembly against the unit with the outermost louvers in the horizontal position and use it as a template for marking attaching hole locations on the unit (see Fig. 1).
3. Drill the 5/32" diameter attaching holes into the unit. Caution – drill could puncture coil if allowed to protrude too far into unit.
4. Attach the louver assembly with the No. 10 x 3/4" sheet metal screws that are provided with the assembly. Installation is now complete.

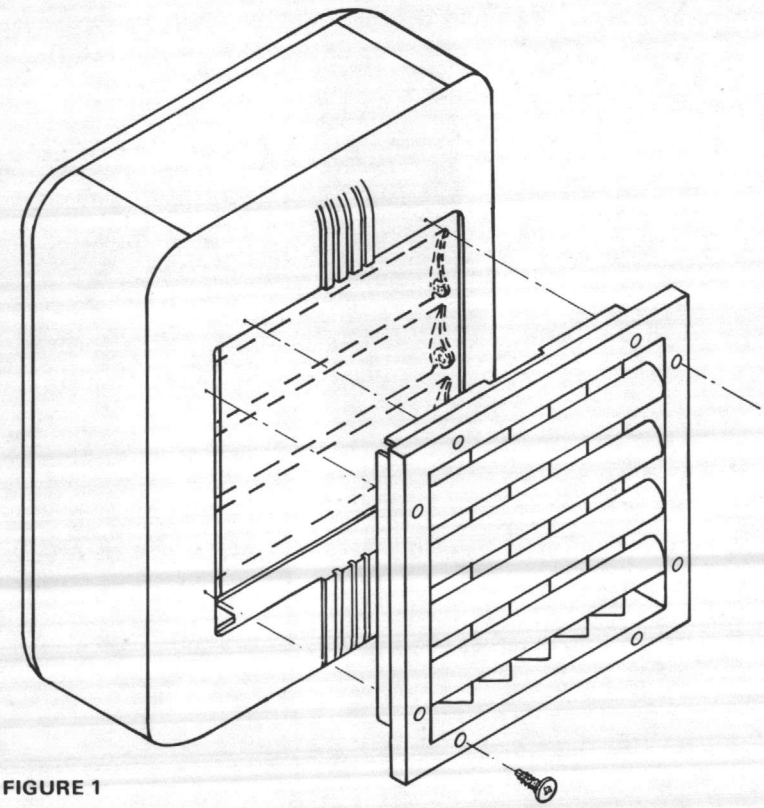

FIGURE 1

McQUAY AIR CONDITIONING

INSTALLATION AND MAINTENANCE DATA

BULLETIN NO. IM 208-2
AUGUST, 1983
FORM NO. 364905Y

ACCESS DOOR KIT for SEASONMAKER FAN-COIL UNITS

This kit is for field installation of access doors on models TSF and CHF fan-coil units.

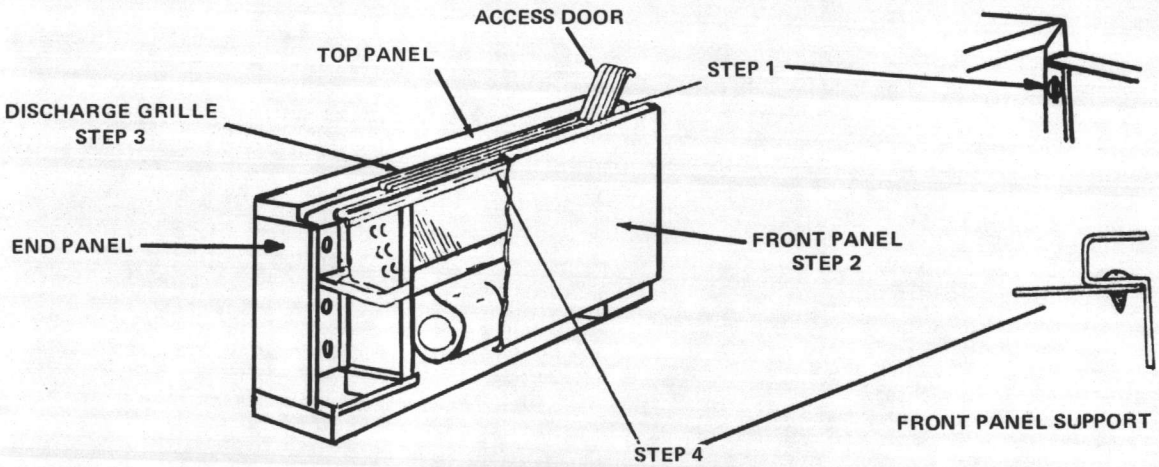

1. Open access doors and remove the two clips holding the front panel in place.
2. Lift front panel up to remove from unit.
3. Remove discharge grille by pushing up and lifting out at the front of grille.
4. Remove four (4) sheet metal screws holding the front panel support to the control box and coil header plates. The old access doors may now be removed.
5. Place the reducing bushings into the holes in the top panel and front panel support where the old access door was removed on models TSF-021D–061D and CHF/CHC-003A–008A. The existing bushings are used on all other size units.
6. Replace front panel support and new access doors. Do not tighten the screws until the bushings in the front panel support are directly across from the bushings in the top panel and the access doors are parallel to the top panel. Slots are provided in the front panel support for this purpose.
7. Replace discharge grille.
8. Replace front panel with access doors open.
9. Try the access doors and keylock (if provided) before replacing clips holding the front panel in place.

ITEM 16

MCQUAY AIR HANDLING UNITS

Supplied by: Hoffman & Hoffman, Inc.
P.O. Box 77258
Greensboro, N.C. 27417
PH: 1-800-632-0432

Parts can be furnished by above supplier.

Installed by: Ramsey Air Conditioning, Inc.
P.O. Box 1333
Jacksonville, N.C. 28540
PH: (919) 455-0414

McQUAY AIR CONDITIONING

INSTALLATION AND MAINTENANCE DATA

BULLETIN NO. IM 80-5
AUGUST, 1977
FORM NO. 211843Y REV. A

SEASONMASTER

LOW AND MEDIUM PRESSURE CENTRAL STATION AIR CONDITIONERS

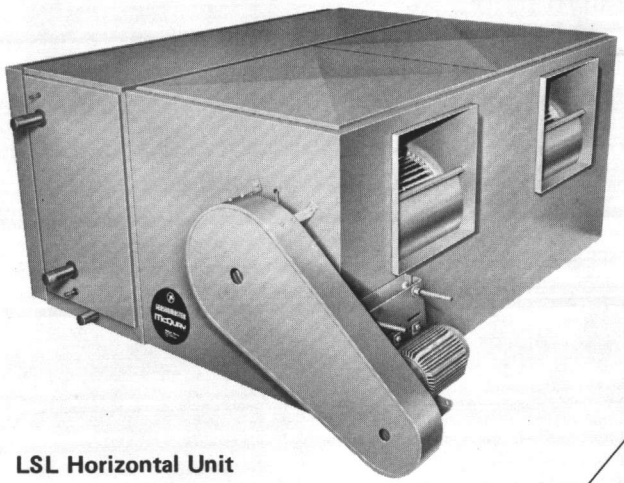

LSL Horizontal Unit

SEASONVENT

LOW PRESSURE HEATING AND VENTILATING UNITS

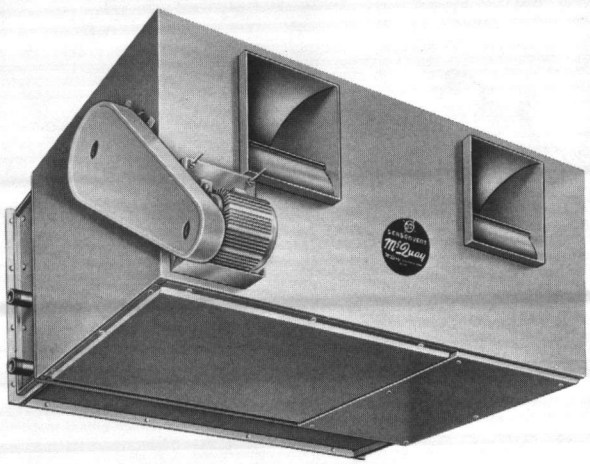

LHD Horizontal Unit

TABLE OF CONTENTS

- GENERAL 2
- ASSEMBLY OF SECTIONS 3
- INSTALLATION 10
- MAINTENANCE 12
  - GENERAL 12
  - SAFETY PRECAUTIONS 12
  - BEFORE START-UP CHECKS 12
  - AFTER FIRST 48 HOURS OPERATION 14
  - OPERATING GUIDELINES 15
    - RPM, TEMPERATURE, VIBRATION LIMITS 15, 16
    - VIBRATION CAUSES 16
    - VARIABLE INLET VANES 16
  - PERIODIC SERVICE AND LUBRICATION 17
- WINTERIZING WATER COILS 18
- APPLICATION RECOMMENDATIONS FOR COILS 18
- FIELD INSTALLATION OR REMOVAL OF COILS 21
- NET WEIGHTS 24

GENERAL

A. The items should be carefully checked against the bills of lading to be sure all crates and cartons have been received. All units should be carefully inspected for damage when received. Visible or concealed damage should be reported immediately to the carrier and a claim filed for damage.

B. Seasonmaster and Seasonvent units are constructed of heavy gauge galvanized steel and are thoroughly inspected before leaving the plant. Care must be taken during installation to prevent damage to units.

C. In order to insure long and trouble-free life, the units should have proper care and maintenance. Enough space should be left around the unit for filter removal, lubrication, belt adjustment, and removal of coils if this should become necessary.

D. Flexible connections should be used on the outlet connections and on inlet duct connections of the unit.

E. Special care should be taken when handling the blower section. All fans are dynamically balanced before leaving the plant. Rough handling, however, can cause misalignment or a sprung shaft. Fans and shaft should be carefully inspected before unit installation to make sure this has not happened.

F. The zone damper of the multi-zone units should be handled with special care. Zone dampers are set and inspected before leaving the plant but should be checked on arrival to the job to be sure the bell arm and connecting rod set screws have not become loose in shipment.

G. Screws, bolts, etc., for assembly of sections are supplied in a cloth bag attached to each section. Gasketing to be used between sections, when assembling, is supplied in rolls in the unit.

H. Drain line from drain pan connection must be adequately pitched and must have a "water seal."

ASSEMBLY OF SECTIONS

FIGURE 1

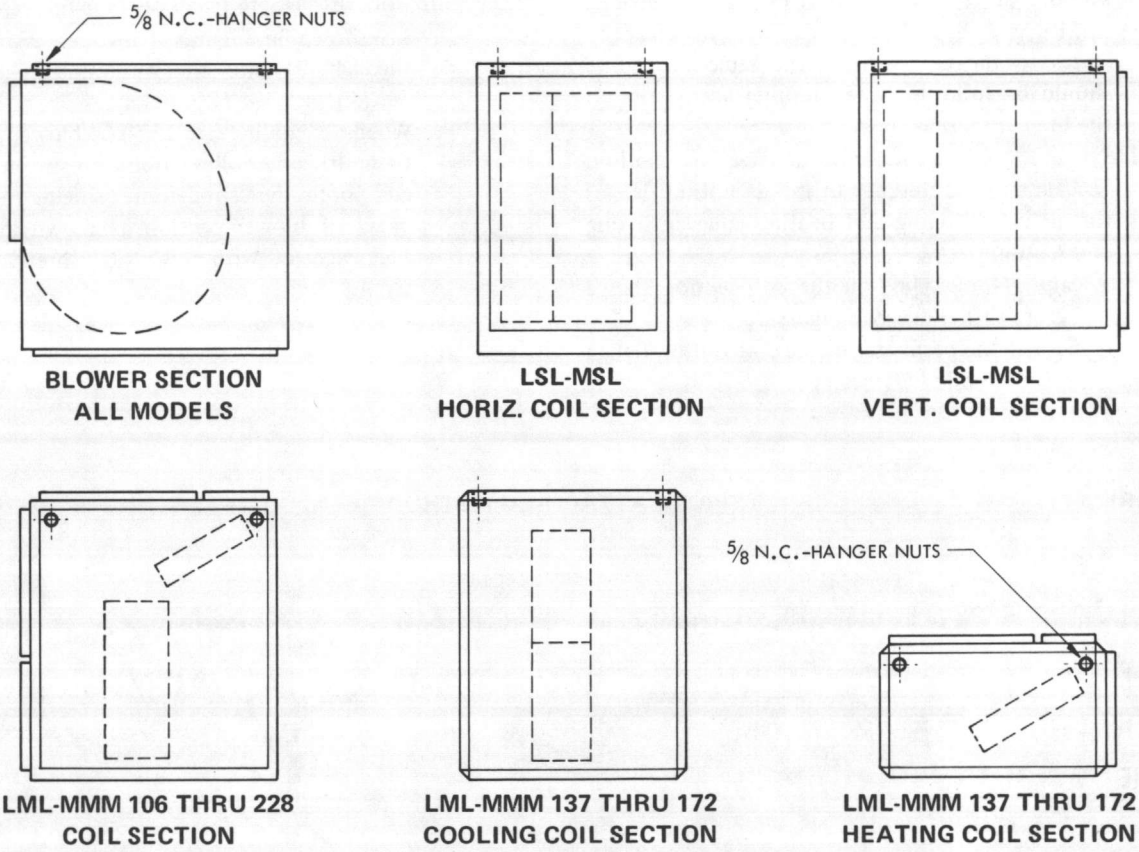

Some units are shipped in sections and must be assembled on the job.

A. **Handling of Sections:**
   1. Top hanger nuts are always provided regardless of unit mounting arrangement. See Figure 1.
   2. Hanger nuts have 5/8 N.C. threads.
   3. If units are to be moved using just one hoist, a spreader bar should be used to prevent damage to the unit.

B. **Gasketing:**
   The gasketing is supplied with each section that has to be assembled on the job.
   1. Gasket the perimeter of the section. Overlap the gasketing approximately 1/8 of an inch when splicing to prevent air leakage between sections. See Figure 2.
   2. With gasketing in place, cut out mounting hole in gasketing so the bolts will clear.

FIGURE 2

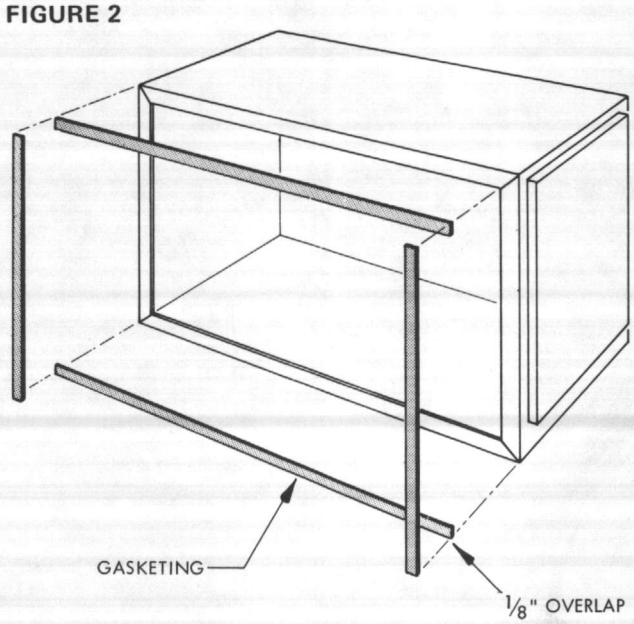

ASSEMBLY OF SECTIONS

C. **Fastening of Sections:**

1. Illustrations show how the flanges of the various sections are bolted together. Figures 12 through 23, Pages 7, 8, and 9, show how to fasten accessories to the coil section, the same procedure should be followed when bolting accessories to the blower section.
2. Figure 3 shows the typical attaching method used and the difference in the mounting flanges for air conditioning and heating and ventilating coil sections.
   a. Slip 1/4 nut clips on the coil section flange before gasketing. See Figure 3.
   b. Gasket the perimeter of the coil section flange as outlined in "Gasketing."
   c. Align the section that is to be bolted to the coil section so the mounting holes match.
   d. Bolt through the accessory or blower section (as shown in Figures 4 through 23, Pages 5 through 9) into the nut clips in the coil section with 1/4 N.C. bolts.
   e. When assembling size 137-164 blower sections to multi-zone coil sections, be sure to gasket and bolt the condensate shield to outlet panel of blower section as shown in Figure 11, Page 6, with 1/4 N.C. thread cutting screws.

FIGURE 3 **TYPICAL ATTACHING METHOD**

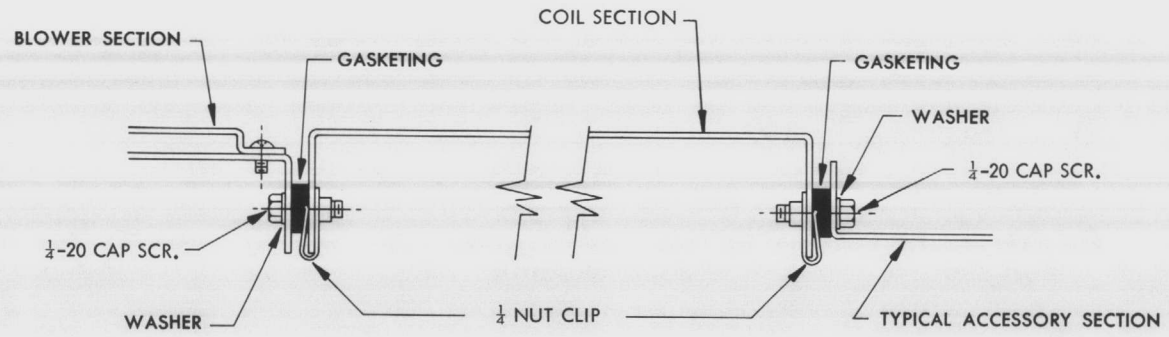

AIR CONDITIONING UNITS

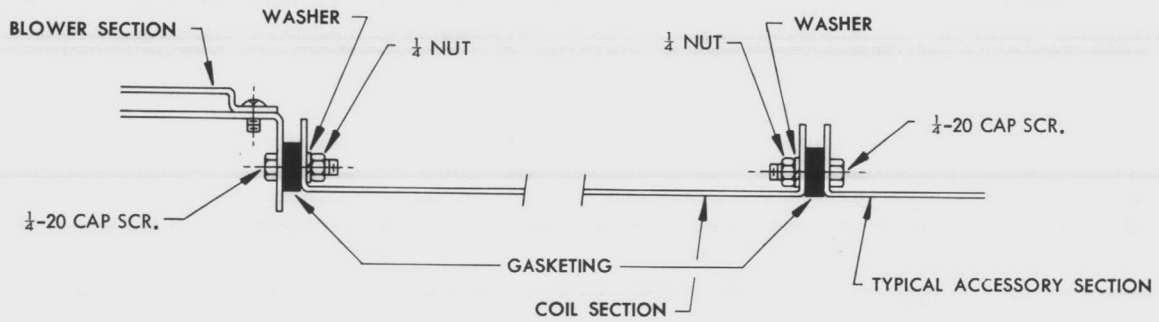

HEATING AND VENTILATING UNITS

ASSEMBLY OF SECTIONS

FIGURE 4

HORIZONTAL BLOWER SECTION
LSL 103H THRU 228H & MSL 108H THRU 228H

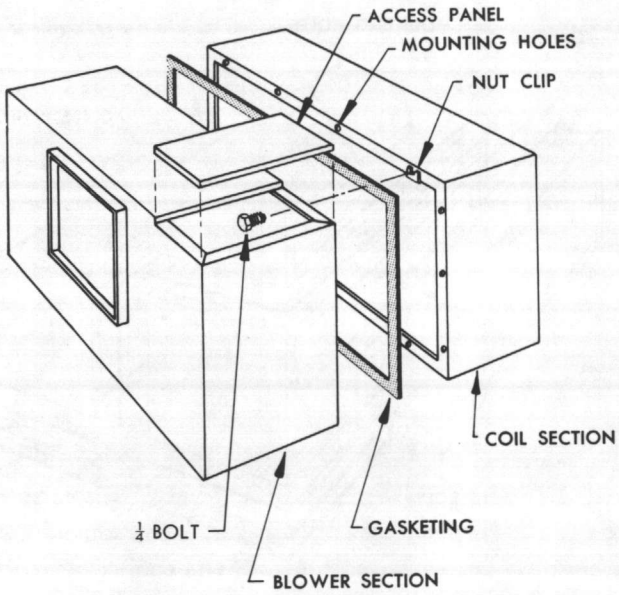

FIGURE 5

VERTICAL BLOWER SECTION
LSL 103V THRU 228V & MSL 108V THRU 228V

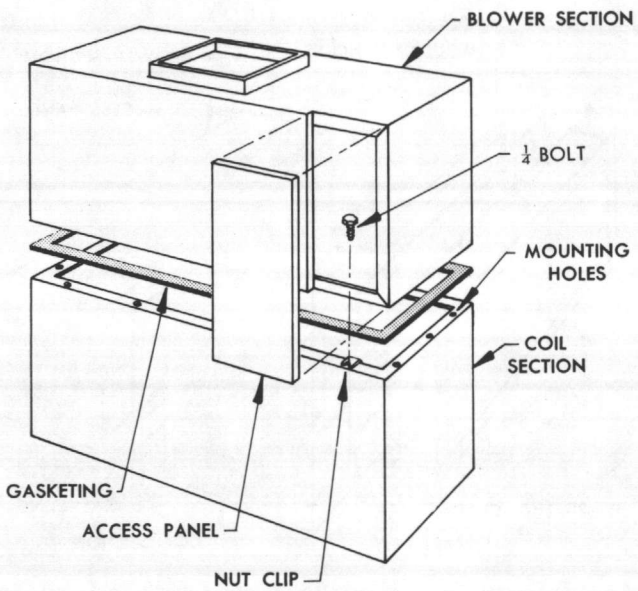

FIGURE 6

HORIZONTAL BLOWER SECTION
LSL-MSL 137H THRU 172H

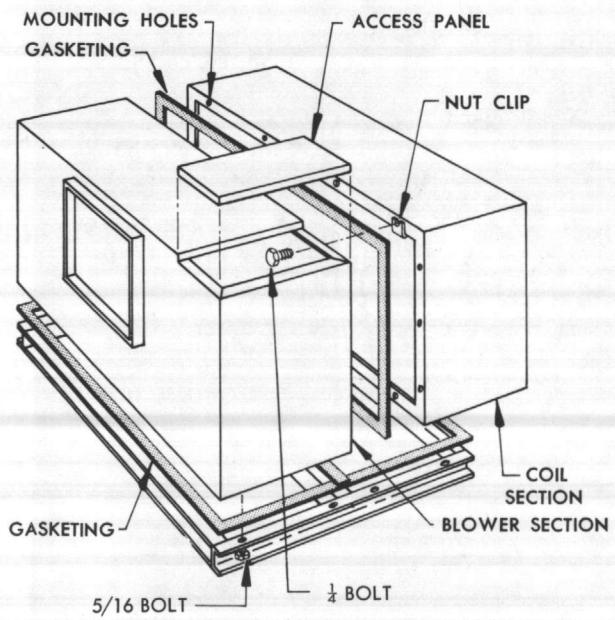

FIGURE 7

VERTICAL BLOWER SECTION
LSL-MSL 137V THRU 150V

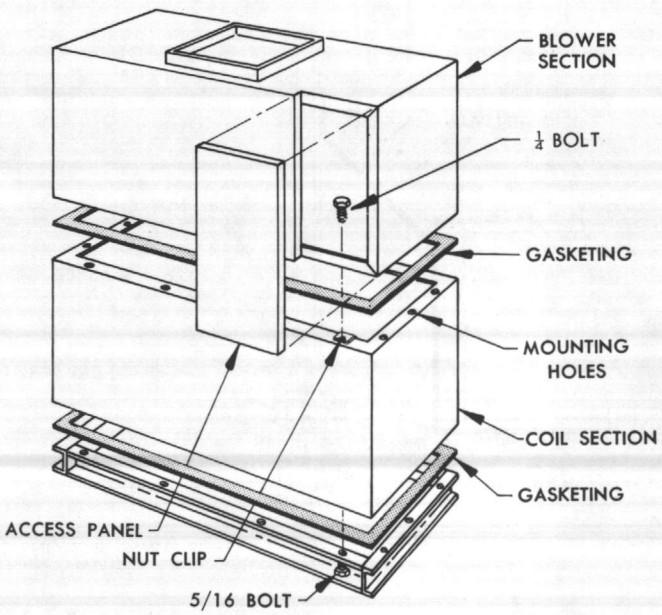

ASSEMBLY OF SECTIONS

FIGURE 8

MULTI-ZONE BLOWER SECT. & ZONE DAMPERS
LML 106 THRU 228 & MMM 108 THRU 228

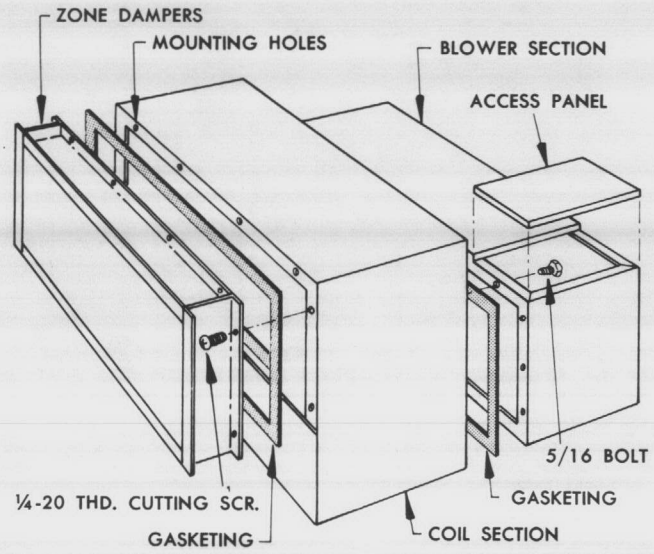

FIGURE 9

MULTI-ZONE BLOWER SECT. & ZONE DAMPERS
LML-MMM 137 THRU 172

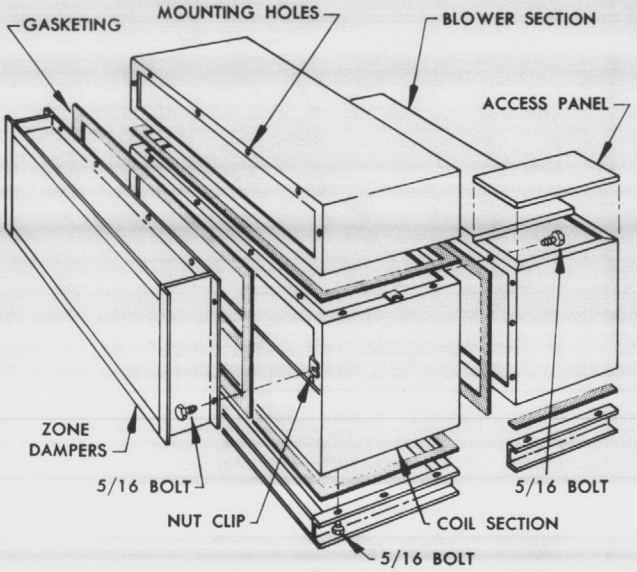

FIGURE 10

MULTI-ZONE BLOWER SECT. & COIL SECT.
LML 106 THRU 228 & MMM 108 THRU 228

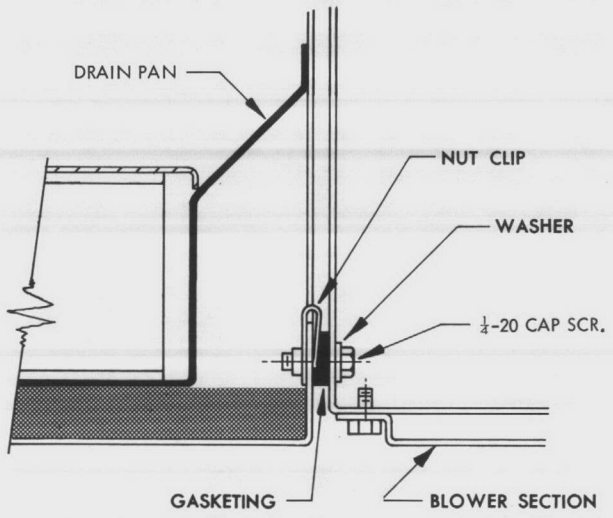

FIGURE 11

MULTI-ZONE CONDENSATE SHIELD
LML-MMM 137 THRU 172

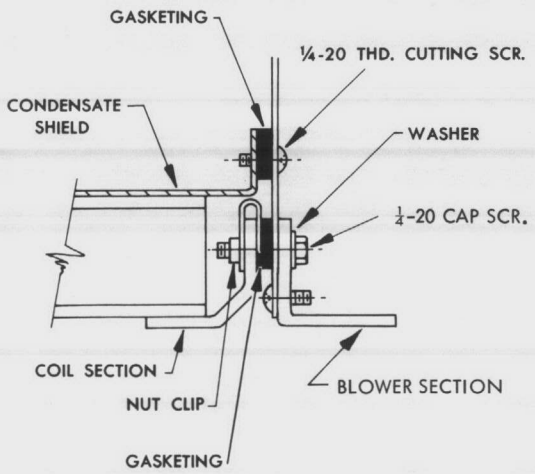

ASSEMBLY OF SECTIONS

FIGURE 12

INTERNAL FACE & BY-PASS,
(ALL MODELS)

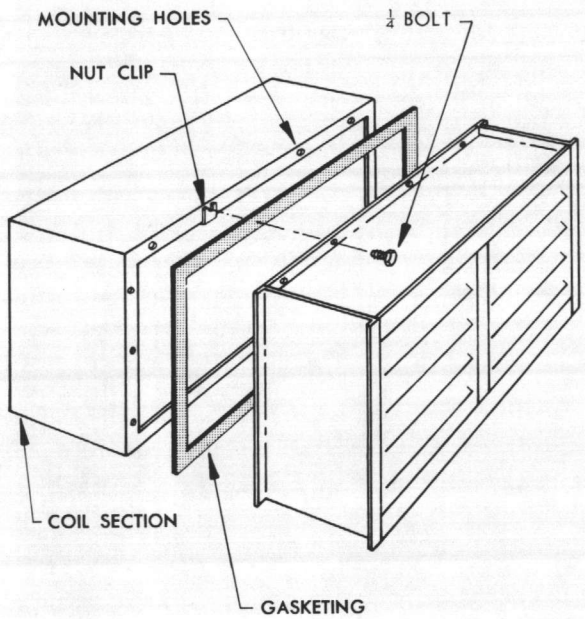

FIGURE 13

FLAT FILTER, PREHEAT COIL SECTION
(ALL MODELS)

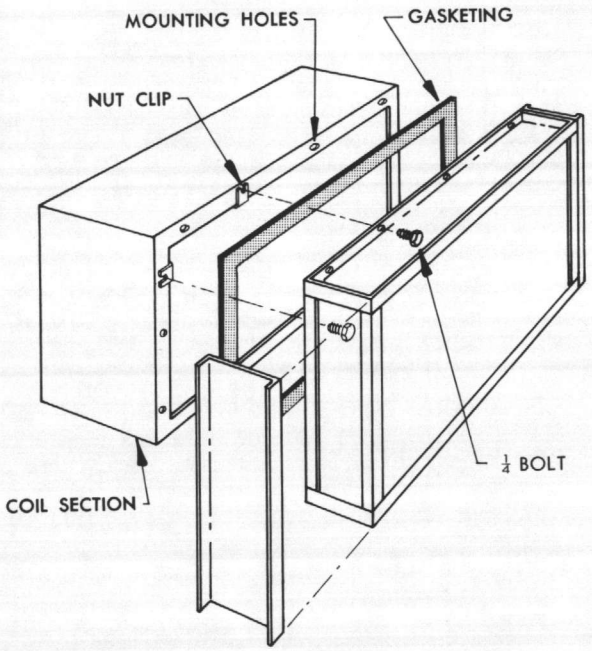

FIGURE 14

ANGULAR FILTER, HEAVY DUTY FILTER,
COMB. ANGULAR FILTER & MIXING BOX
(ALL MODELS)

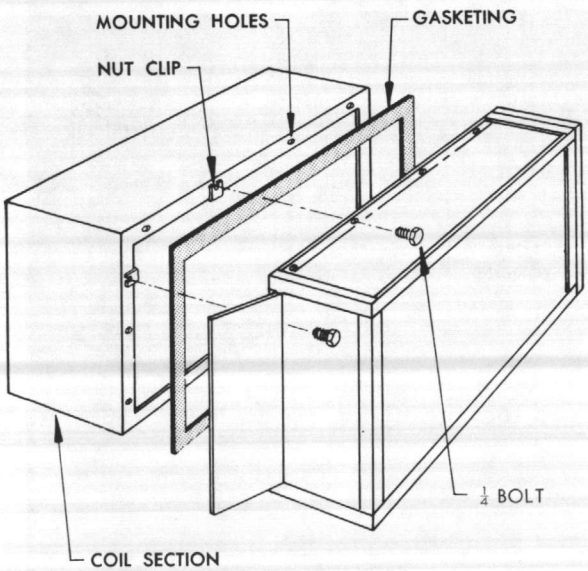

FIGURE 15

EXTERNAL FACE & BY-PASS
(ALL MODELS)

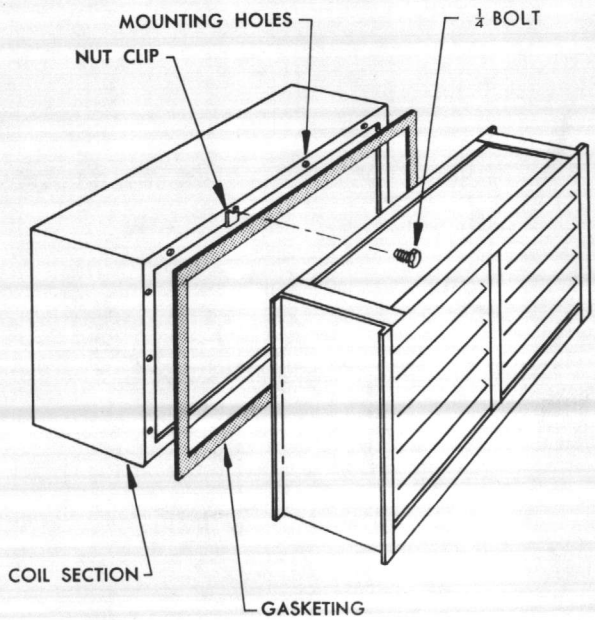

ASSEMBLY OF SECTIONS

FIGURE 16

VERTICAL BY-PASS DUCT
LSL 103V THRU 228V & MSL 108V THRU 228V

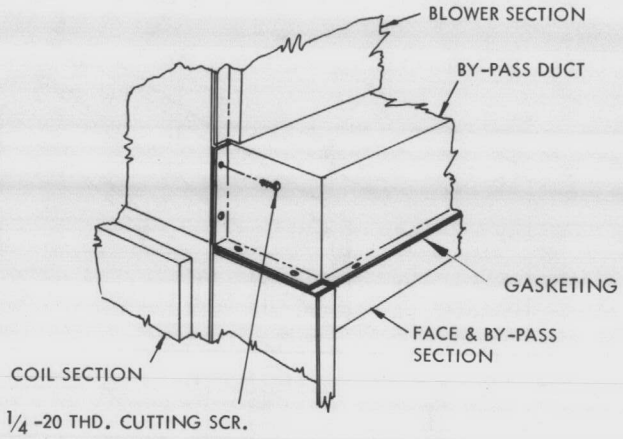

FIGURE 17

VERT. BY-PASS DUCT WITH SPACER SECT.
LSL 103V THRU 228V & MSL 108V THRU 228V

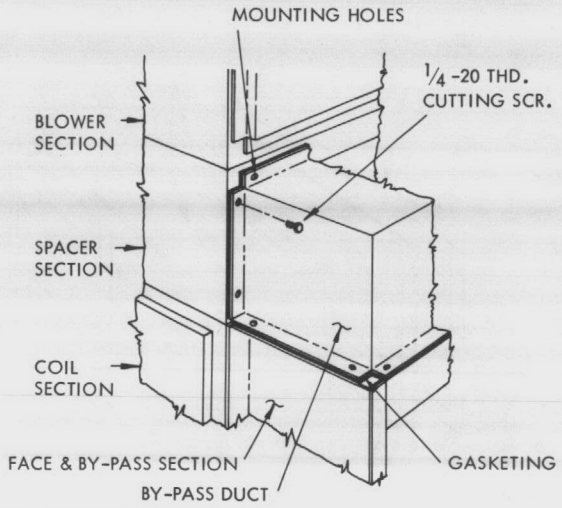

FIGURE 18

VERTICAL BY-PASS DUCT
LSL-MSL 137V THRU 150V

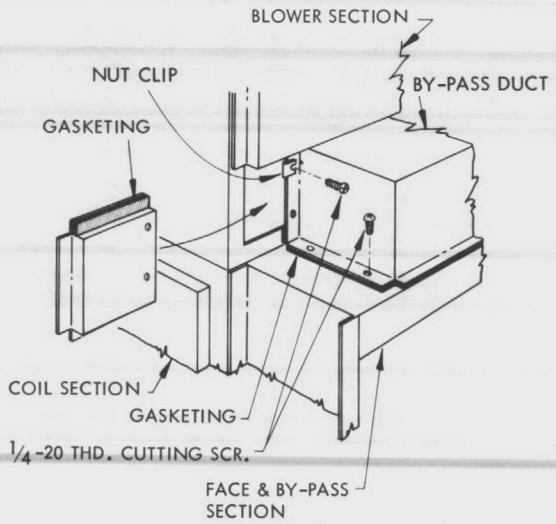

FIGURE 19

VERT. BY-PASS DUCT WITH SPACER SECT.
LSL-MSL 137V THRU 150V

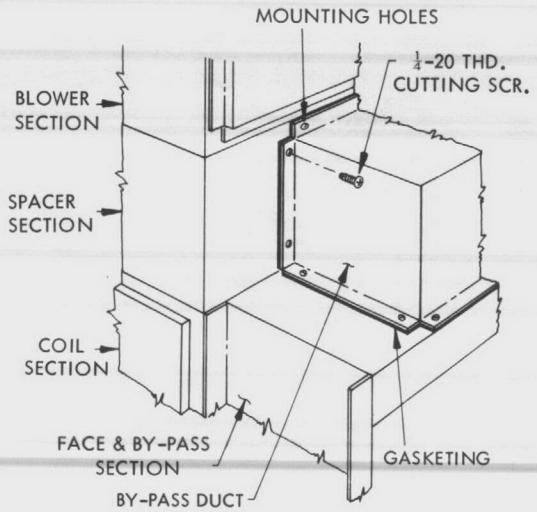

ASSEMBLY OF SECTIONS

FIGURE 20

HORIZONTAL BY-PASS DUCT
LHD-LSL 103H THRU 228H & MSL 108H THRU 228H
VERTICAL BY-PASS DUCT
LHD 103V THRU 228V

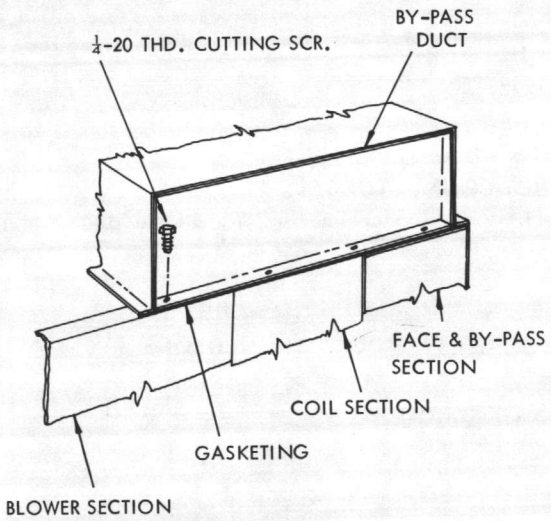

FIGURE 21

HORIZ. BY-PASS DUCT WITH SPACER SECT.
LHD-LSL 103H THRU 228H & MSL 108H THRU 228H
VERT. BY-PASS DUCT WITH SPACER SECT.
LHD 103H THRU 228H

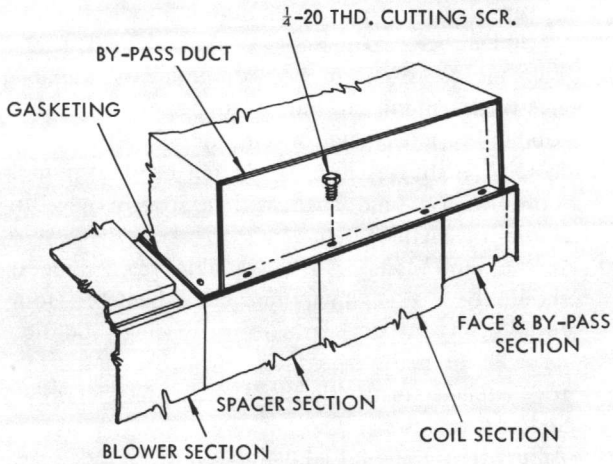

FIGURE 22

HORIZONTAL BY-PASS DUCT
LHD-LSL-MSL 137H THRU 172H
VERTICAL BY-PASS DUCT
LSL-MSL 137V THRU 150V

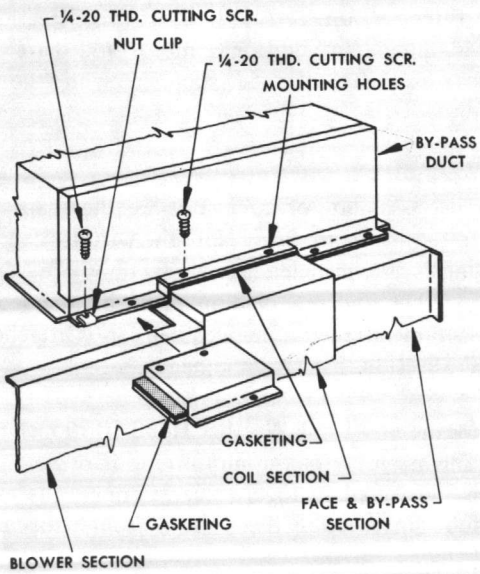

FIGURE 23

HORIZ. BY-PASS DUCT WITH SPACER SECT.
LHD-LSL-MSL 137H THRU 172H

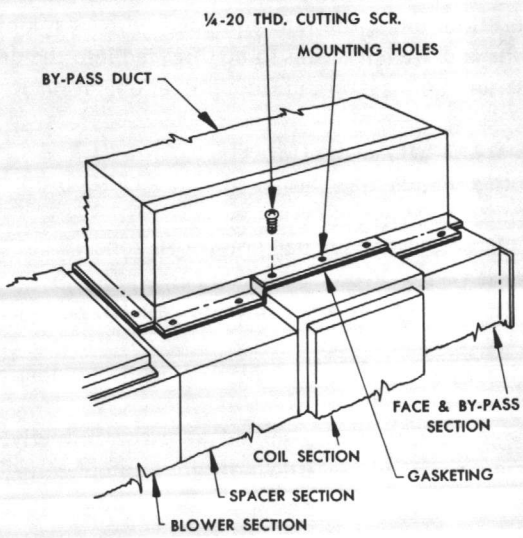

INSTALLATION

DRIVE INSTALLATION

A. Motors
   1. Units with motor mounted on outside of fan section: motors of NEMA frame 254T and larger are shipped unmounted. Certain smaller motors may also be shipped separately.
   2. Units with internal motor and drive: McQuay-furnished motors are mounted inside the fan cabinet before shipping.

B. Bolt motor to motor base on unit. Use flexible electrical conduit at motor to permit six inches total motor movement for tensioning V-belts.

C. Install fan sheave close to the fan bearing; mount motor sheave, and align with a straight edge to insure true running belts.

D. If the motor sheave is a variable pitch type it should be set at minimum pitch diameter (four turns open) for start up. Groove spacing should be checked to make sure it is equal. See I.M. #118 for explicit instructions. Tighten all setscrews and/or capscrews.

E. Adjust motor mount adjusting screws for adequate run-in belt tension. Attach belt guard (where used) to end panel of fan section with screws provided.

UNIT INSTALLATION

A. Unit is equipped with either 3/4 diameter anchor holes or 5/8 N.C. tapped hanger holes for mounting the unit.

B. If the unit has 5/8 N.C. tapped hanger nuts they are accessible through knock-outs or "Dot-Plugs" in unit panels.

C. When unit is equipped with vibration isolators, instruction sheets will be sent with IM bulletin showing where to locate the isolators. Isolators for floor mounting are equipped with positioning pins and are not meant to be threaded into the unit.

D. Be sure unit is level to insure proper operation.

ZONE DAMPER ADJUSTMENT

If multi-zone damper blades do not close properly, adjust the blades as follows:

A. Loosen set screws in bell arm for all zones.

B. Close tightly all cold deck dampers.

C. Align all bell arms so they are parallel. See Figure 24.

D. Tighten set screws on bell arms while holding the dampers closed.

E. Zone damper blades should all close properly, if one or a few zones do not close completely, the procedure can be repeated for these zones.

FIGURE 24 ZONE DAMPER LINKAGE

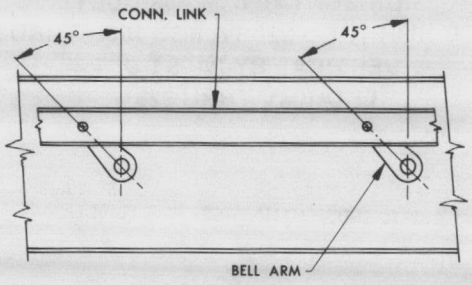

DUCT CONNECTORS

Each zone divider has a "W" shaped duct clip. See Figure 25.

FIGURE 25 DUCT CONNECTORS

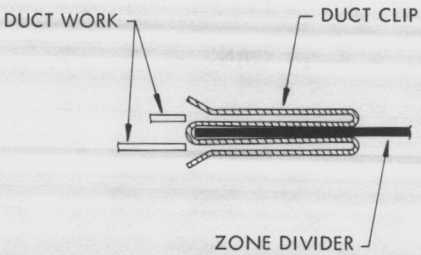

OUTDOOR INSTALLATION (OPTIONAL FEATURE)

Factory modifications for outdoor installation consist of a cap type access panel for the blower section and weather caps for the following accessories: Internal and external bypass sections; flat, angular, and heavy duty filter section; 1, 2, 3 and 4 row coil sections; and zone dampers. In addition a motor and drive weather hood (optional) may be supplied with the blower section.

A. **Accessories**
The assembly of accessory weather caps is illustrated in Figure 26A. Note the weather cap support angles are installed as the sections are assembled together and are held in place by the section-to-section fasteners. The weather cap is attached after the sections have been joined.

B. **Motor and Drive Weather Hood (Optional Feature)**
The assembly of the motor and drive weather hood is illustrated in Figure 26A. Connect the extended lube lines before the bottom front panel is put in place.

INSTALLATION

WEATHER SEALING OF UNITS MODIFIED FOR OUTDOOR INSTALLATION

Units requiring a weathertight seal must be sealed on the job site as illustrated in Figure 26B. The responsibility for the weather seal is that of the installing contractor. The (caulking consistency) sealant used may be supplied by others or may be purchased from McQuay.

A. **Cleaning**

Before sealing, clean all seams with a solvent to remove oil and dirt and trim excess gasketing from section-to-section joints.

B. **Sealing**

All exterior seams, section-to-section joints and fastener heads must be sealed. See Figure 26B.

FIGURE 26A

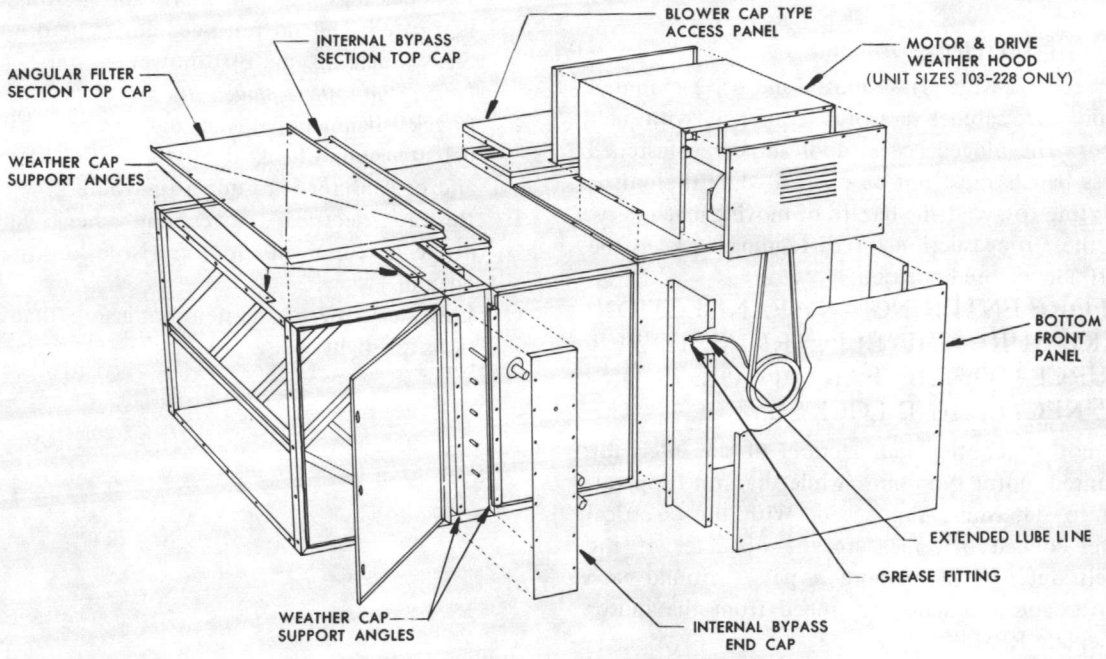

FIGURE 26B

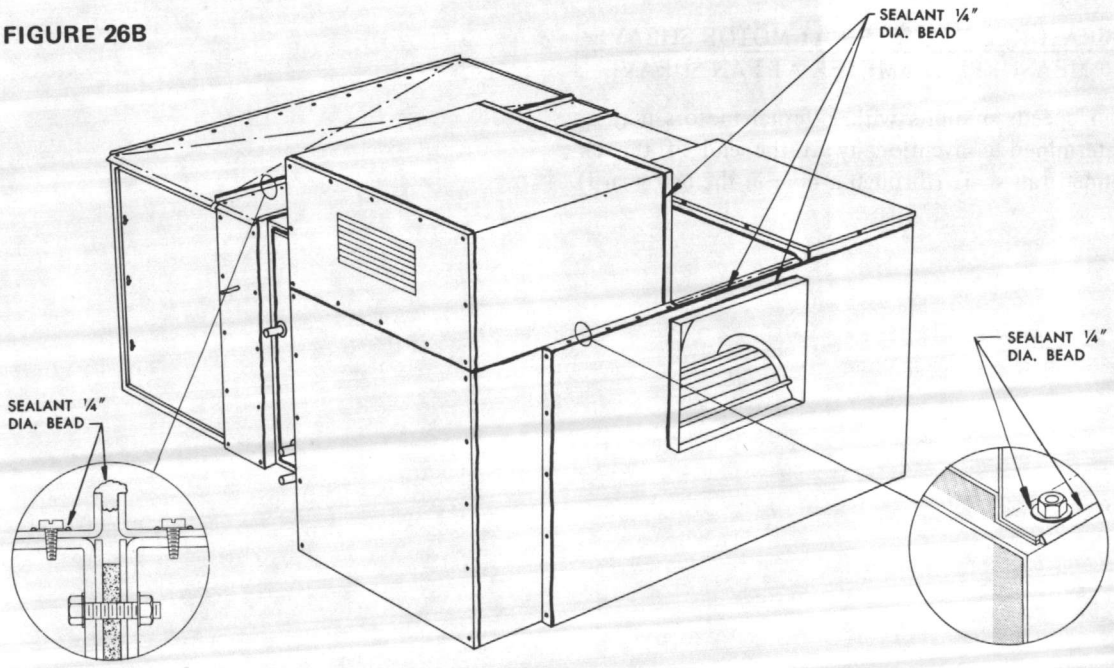

MAINTENANCE

The user is reminded that:

1. Electrical service to the fan motor must correspond to the rated voltage on the motor nameplate and be in conformance with the National Electrical Code and local restrictions.
2. The fan section metal frame must be connected to the building electrical ground.
3. A door electrical interlock is not provided.
4. Thermal motor protection is external to the unit. Thermal protection and a disconnect switch per electrical codes are provided by others.

SAFETY PRECAUTIONS

A. Fan sections which have motor and drive mounted within the cabinet are not equipped with belt guards. The hinged access door and screw-fastened access panels must not be opened while the unit is operating to avoid the hazard of moving machinery; and the strong suction forces tending to keep the door(s) in a closed position.

B. BEFORE ENTERING ANY FAN SECTION, MAKE SURE THE ELECTRICAL POWER SOURCE TO THE FAN MOTOR IS DISCONNECTED AND LOCKED.

C. Do not enter the fan section of an internally mounted motor type unit (while the unit is operating) to determine fan speed. With the electrical power locked off, measure the diameter of the V-belt outer surface where it passes around each sheave, and calculate fan speed from the motor nameplate RPM.

$$\text{FAN RPM} = \text{MOTOR RPM} \times \left[\frac{\text{MEASURED DIAMETER AT MOTOR SHEAVE}}{\text{MEASURED DIAMETER AT FAN SHEAVE}}\right]$$

Fan speeds of units with external motors may be determined conventionally at the end of the extended fan shaft (through a hole in the belt guard).

BEFORE START-UP CHECKS

A. BEFORE ENTERING FAN SECTION MAKE SURE THAT FAN ELECTRICAL POWER SOURCE IS DISCONNECTED AND LOCKED.

B. Check tightness of setscrews in bearings and fan wheel(s). If re-tightening is needed make certain the fan wheel(s) are positioned per Tables 1 or 2 and setscrews are torqued per Table 3.

C. Rotate shaft by hand to be sure it is free.

D. Ball bearings on fan shaft and motor are pre-lubricated, and do not need grease before start-up. Sleeve bearing motors, however, *must be oiled before the unit is placed in operation.*

E. Check alignment of fan and motor sheaves, and belt tension. Check tightness of sheave setscrews and/or capscrews, torque as in Table 2.

F. Restore electrical power and check fan(s) for proper direction of rotation. (Note 'rotation' arrow on unit.)

G. Leak test thermal system to insure that connections are tight.

MAINTENANCE

TABLE 1

WHEEL-TO-INLET FUNNEL RELATIONSHIP
AIRFOIL TYPE FAN WHEELS

Note: Dimensional relationship must be held to obtain rated air performance.

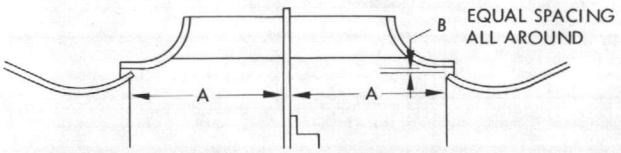

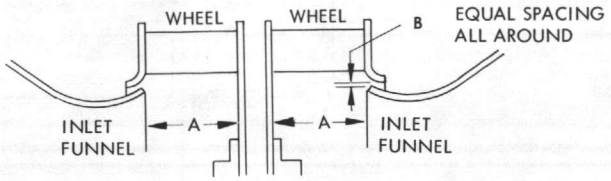

Unit Size	Fan(s)	A ± 0.12"	B ± 0.10"
#106	#1225	4.60"	0.19
108	1350	5.10	0.19
111	1500	5.66	0.19
214	1825	7.19	0.25
217	1825	7.19	0.25
222	2225	8.69	0.25
228	2225	8.69	0.25

Unit Size	Fan	A ± 0.06"	B ± 0.10"
#137	#27	9.94"	0.25
141	30	11.0	0.28
150	33	12.0	0.31
164	36	13.44	0.34
172	36	13.44	0.34

Dimension 'A' is achieved by loosening setscrews in wheel hub(s), shifting wheel(s) axially as needed, and re-tightening setscrews.

'B' is obtained by loosening screw and washer fasteners around periphery of funnel(s) shifting funnel radially as required, and re-torqueing fasteners.

MAINTENANCE

TABLE 2

WHEEL-TO-INLET FUNNEL RELATIONSHIP
FORWARD CURVED TYPE FAN WHEELS

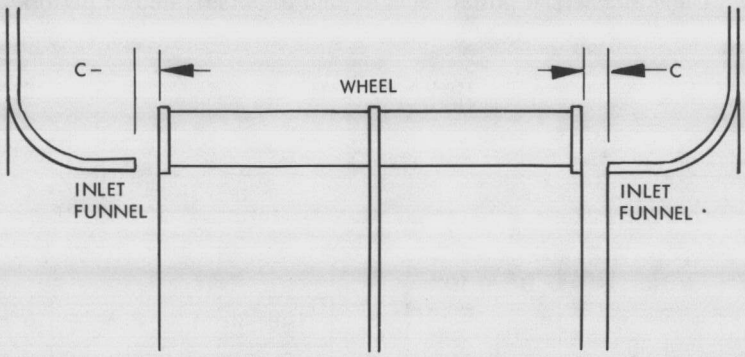

Unit	Size	Wheel(s)	C	Unit	Size	Wheel(s)	C
LYF LHD LSL LML	103	#9	0.18"–0.31"	LYF LHD LSL LML	217	#15	0.25"–0.50"
	104	#12	0.18"–0.31"		222	#16	0.25"–0.50"
	106	#12	0.25"–0.38"		228	#20	0.38"–0.62"
	206	#9	0.18"–0.31"				
	108	#15	0.25"–0.50"				
	209	#12	0.25"–0.38"				
	111	#16	0.25"–0.50"				
	214	#13	0.25"–0.38"				
MSL MMM	108	#13	0.25"–0.38"	MSL MMM	228	#18	0.31"–0.56"
	111	#15	0.12"–0.50"				
	214	#12	0.12"–0.50"				
	217	#13	0.25"–0.38"				
	222	#15	0.12"–0.50"				

Adjust dimension 'C' by loosening wheel hub setscrews, shifting wheel(s) axially as needed, and re-tightening setscrews.

TABLE 3

BEARING COLLAR AND WHEEL HUB SETSCREW TORQUE

Setscrew Diameter	Torque (foot lbs.) Minimum
1/4"	5.5
5/16"	10.5
3/8"	19.0
7/16"	29.0
1/2"	42.0
5/8"	92.0

AFTER FIRST 48 HOURS OF OPERATION:

A. Disconnect and lock electrical power source. Check tightness of all bearing, wheel, and sheave setscrews (or capscrews). Torque per Table 3.

B. Re-check belt tension, adjust if necessary. Belts tensioned sufficiently to slip one to two seconds at start up will perform satisfactorily, extending bearing life and reducing vibration. If re-tensioning is necessary be certain sheave alignment is retained.

MAINTENANCE
OPERATING GUIDELINES

OPERATING LIMITS

A. Do not exceed the operating limits in Tables 4 or 5. A fan wheel overspeeded beyond the RPM and temperature limits shown may suffer permanent distortion or fracture. The resulting unbalance may cause severe unit vibration.

TABLE 4

MAXIMUM OPERATING CONDITIONS
AIRFOIL TYPE WHEELS

Unit	Size	Max. RPM	Motor Location	Max. Air Temp. Through Fan Section, °F
LYF LHD LSL LML MSL MMM	#106	3864	external (only)	450*
	108	3675	external (only)	450*
	111	3292	external (only)	450*
	214	2716	external (only)	450*
	217	2716	external (only)	450*
	222	2226	external (only)	450*
	228	2226	external (only)	450*
	137	1950	internal (only)	140△
	141	1755	internal (only)	140△
	150	1600	internal (only)	140△
	164	1445	internal (only)	140△
	172	1445	internal (only)	140△

*With high temperature specially lubricated bearings.
△To 300° maximum with special motor and special bearing lubricant.

Note: With Variable Inlet Vanes (optional accessory) limit air temperature is 300°F.

TABLE 5

MAXIMUM OPERATING CONDITIONS
FC TYPE FAN WHEELS

Unit	Size	Max. RPM	Unit	Size	Max. RPM
LYF LHD LSL LML	#103	1800	LYF LHD LSL LML	#217	1273
	104	1217		222	1157
	106	1559		228	955
	206	2400			
	108	1273			
	209	1559			
	111	1157			
	214	1415			
MSL MMM	#108	1830	MSL MMM	#228	1570
	111	1737			
	214	2340			
	217	2120			
	222	1910			

Note 1: All motors external to fan cabinet.
Note 2: Maximum air temperature through fan section 450°F (with special high temperature bearing lubricant).

MAINTENANCE
OPERATING GUIDELINES

B. Vibration

Each unit as shipped is trim-balanced, and should operate smoothly. Instruments are available to field-test vibration amplitude. The range of operating speeds and displacement amplitudes following yield acceptably smooth fan operation:

TABLE 6

OPERATING GUIDELINES

Fan Speed RPM	Vibration Displacement,* mils (0.001") at Fan Bearings
600	2.4
1000	1.6
1600	1.0
3000	0.5

*At fan rotational frequency

Intermediate values may be interpolated.

Note: Excessive vibration from any cause contributes to premature fan and motor bearing failure. Overall vibration levels should be monitored every 3 months of operation. An increase in level is an indication of potential trouble.

VIBRATION CAUSES

A. Wheel Imbalance
   1. Dirt or debris on wheel blades.
   2. Loose setscrews in wheel hub or bearing-to-shaft.
   3. Wheel distorted from overspeed.

B. Bent shaft.

C. Drive faulty.
   1. Variable pitch sheaves–axial, and radial runout of flanges; uneven groove spacing, out of balance. Also similar faults in driven sheave.
   2. Drive misalignment.
   3. Bad V-belts; lumpy, or mismatched, belt tension too tight or too loose.

D. Bad bearings, loose hold-down bearing bolts.

E. Motor imbalance.

F. Fan section not supported evenly on foundation.

VARIABLE INLET VANES

(optional accessory for AF fans)

Variable inlet vane assemblies consist of airfoil-type inlet funnels with integral sets of lever-actuated radial vanes; one assembly on each side of the fan. The vanes, upon opening, *must direct air in the direction of wheel rotation*. (Note the 'rotation' label fastened to the unit.)

The vanes rotate 90 degrees from tight shut to full open position; a stop limits the amount of open travel, and must not be changed. Both sets must operate in unison; adjustments of the linkage rod ends and lock nuts can be made to insure uniformity. Actuating motor and controls furnished by others.

The moving parts of the vanes are permanently lubricated. All threaded fasteners must be checked for tightness at the usual inspection period.

MAINTENANCE

PERIODIC SERVICE AND MAINTENANCE

A. Check all moving parts for wear every six months.
B. Check bearing collar set screws for tightness every six months.

BALL AND SLEEVE BEARING LUBRICATION

A. **Ball Bearings**

1. Motor bearings – All ball bearings are prelubricated and do not require addition of grease at time of installation. However, periodic cleaning out and renewal of grease is necessary. Please note that extreme care must be exercised to prevent foreign matter from entering the bearing. It is also important to avoid over-greasing. Only a high grade, clean mineral grease having the following characteristics should be used.
   a. Consistency a little stiffer than that of vaseline, maintained over the operating temperature range; melting point preferably over 150°C (302°F), freedom from separation of oil and soap under operating and storage conditions; and freedom from abrasive matter, acid, alkali and moisture.
   b. Specific greasing instructions are to be found on a tag attached to the motor and should generally be adhered to.
2. Fan Shaft Bearings – All ball bearings are prelubricated and do not require addition of grease at time of installation. However, periodic renewal of grease is necessary.

   Internal bearings are accessible through access panel in cabinet. Units that are equipped with extended lube lines will have grease fittings for internal bearings on drive end panel of blower section. Apply grease while bearings are running, adding slowly until a slight bleeding of grease from the seals is noted. For greasing units with extended lube lines, remove access door so bearing can be viewed when greasing. (Tie hinged door(s) open.)
   DO NOT OVERLUBRICATE.
   The lubrication interval varies with the period of operation and temperature of the ambient air. Follow instructions listed below:

Temperature Range	Continuous Operation	12 Hr. Day Operation
To 150°F	6 mo.	1 year
To 200°F	3 mo.	6 mo.
Over 200°F	1½ mo.	3 mo.

TABLE 7

LUBRICANTS RECOMMENDED FOR FAN SHAFT BALL BEARINGS

Ambient Temp. Range	Lubricant
To 225°F	Sinclair Oil Co. – Litholene Humble Oil Co. – Lidok #2 Keystone Lubrication Co. – 84-H-MED Shell Oil Co. – Alvania #2
226°F–300°F*	Socony-Mobil Oil Co. – Armvac-781 Master Lubricants, Inc. – M-24-M
301°F–450°F*	Dow-Corning – DC-41 Dow-Corning – DC-44 General Electric Co. – Versilube #300 Keystone Lubrication Co. – #89 Med. Grade – #2 Consistency

*Special order (Hi-Temp) bearings required in these temperature ranges.

B. **Sleeve Bearings**

Sleeve bearings must be oiled after installation but before initial start up.

1. Motor Bearings – Drain plugs should be checked to see that they are tight and the oil well filled to the proper level while the motor is at rest.

   The oil level should be checked periodically with the motor stopped. If the oil is dirty it should be drained and the bearing flushed with clean oil until the outcoming oil is clear. Then the oil well should be refilled. Use only a high grade mineral oil of SAE 20 for normal operation. Follow in general the oiling instructions on the tag attached to the motor.

REPLACEMENT PARTS

When replacement parts are required on units manufactured by McQuay, furnish factory with unit model number and serial number as shown on serial plate on drive end of blower section.

WINTERIZING WATER COILS

Due to air stratification, failure of outdoor air dampers and/or preheat controls, coil freeze up can occur. Routine draining of water cooling coils for winter shutdown cannot be depended on as insurance against freeze-up resulting in severe coil damage. It is recommended that all coils be drained as thoroughly as possible and then treated in the following manner:

Fill each coil independently with an anti-freeze solution using a small circulating pump and again thoroughly drain. Check freezing point of anti-freeze before proceeding to next coil. Due to a small amount of water always remaining in each coil there will be a diluting effect. The small amount of anti-freeze solution remaining in coil must always be potent enough to prevent freeze up. Warning: Carefully read instructions for mixing anti-freeze solution used. Some products will have a higher freezing point in its natural state than when mixed with water.

APPLICATION RECOMMENDATION FOR COILS

OBSERVE ALL LOCAL CODES AND INDUSTRY STANDARDS

A. **Water Cooling Coils**

1. Water supply, water return, drain and vent connections extend through the end panel of the coil section. All connections are labeled on the end panel.
2. Water supply and water return connections are male iron pipe.
3. When installing couplings, do not apply undue stress to the connection extending through unit panel. Undue force may break weld of connection to coil header.
4. Follow recommendations of the control manufacturer regarding types, sizing and installation of controls.

B. **Direct Expansion Coils**

1. The coil distributor and suction connection extend through the end panel of the coil section.
2. Check nozzle in distributor for proper tonnage.
3. When a thermostatic expansion valve is supplied with the unit, it will be located outside the unit and connected directly to the distributor.
4. The thermostatic expansion valve must be of the external equalizer tube type. Connect the 1/4 inch diameter external equalizer tube provided on the coil to connection on expansion valve.
5. Care should be exercised when piping up the system to be sure all joints are tight and all lines are dry and free of foreign material.
6. To be tight the system should hold a vacuum of 27 inches hg. overnight. A charge of FREON AND CO_2 should then be put in the system as a final check. System is then ready for charging.

C. **Steam Coils** (Refer to Figure 27, Page 20.)

1. All steam coils in units are pitched toward return connection.
2. Steam supply and steam return connections are male iron pipe and are labeled on the end panel of coil selection. Connections extend through coil section end panel.
3. When installing couplings, do not apply undue stress to the connection extending through unit panel. Undue force could break weld of connection to coil header.
4. Support piping independently of coils and provide adequate piping flexibility. Stresses resulting from expansion of closely coupled piping can cause serious damage.
5. Do not reduce pipe size at the coil return connection. Carry return connection size through the dirt pocket, making the reduction at the branch leading to the trap.
6. It is recommended that vacuum breakers be installed on all applications to prevent retaining condensate in the coil. Generally the vacuum breaker is to be connected between the coil inlet and the return main, as shown. However, for a system with a flooded return main, the vacuum breaker should be open to the atmosphere and the trap design should allow venting of large quantities of air.
7. Do not drip supply mains through the coil.
8. Do not attempt to lift condensate when using modulating or on/off control.
9. Size traps in accordance with manufacturers' recommendations. Be certain that the required pressure differential will always be available. DO NOT UNDERSIZE.

APPLICATION RECOMMENDATION FOR COILS

10. Float and thermostatic or bucket traps are recommended for low pressure steam. On high pressure steam, bucket traps are normally recommended. Thermostatic traps should be used only for air venting.
11. Bucket traps are recommended for use with on/off control only.
12. Locate traps at least 12 inches below the coil return connection.
13. Multiple coil installation.
    a. Each coil or group of coils that is individually controlled must be individually trapped.
    b. Coils in series–separate traps are required for each coil, or bank of coils, in series.
    c. Coils in parallel–a single trap may generally be used but an individual trap for each coil is preferred.
    d. Do not attempt to lift condensate when using modulating or on/off control.
14. With coils arranged for series airflow a separate control is required on each bank, or coil in the direction of air flow.
15. Modulating steam valves are not recommended on high pressure systems.
16. Modulating valves must be sized properly. DO NOT UNDERSIZE.
17. Freezing conditions (entering air temperatures below 35°F).
    a. 5JA, 8JA, 5RA and 8RA Coils are definitely recommended.
    b. 5 psi steam must be supplied to coils at all times.
    c. Modulating valves are not recommended. Control should be by means of face and bypass dampers.
    d. Consideration should be given to the use of two or three coils in series with two position steam control valves on that coil or coils which will be handling 35°F, or colder, air. The desired degree of control can be attained with a modulating valve on the downstream coil.
    e. Provision should always be made to thoroughly mix fresh air and return air before it enters coil. Also, temperature control elements must be properly located to obtain true air mixture temperatures.
    f. As additional protection against freeze-up, the trap should be installed sufficiently far below coil to provide an adequate hydrostatic head to ensure removal of condensate during an interruption in the steam pressure. Estimate 3 feet for each 1 psi of trap differential required.
    g. On start up, admit steam to coil ten minutes before admitting outdoor air.
    h. Provision must be made to close fresh air dampers if steam supply pressure falls below minimum specified.

D. **Water Heating Coils**

1. Water supply and water return connections extend through the end panel of the coil section. All connections are labeled on the end panel.
2. The drain and vent connections on the one and two row coils must be added to jobsite piping.
3. Water supply and water return connections are male iron pipe.
4. When installing couplings, do not apply undue stress to the connection extending through unit panel. Undue force could break the weld connection to coil headers.
5. Follow recommendations of the control manufacturer regarding types, sizes and installation of control.
6. Hot water coils are not recommended for use with entering air below 40°F.
7. If fresh air and return air are to be heated by a hot water coil, care should be used in the design of the system to assure thorough mixing before air enters the coil.

FOR PREPARATION OF COILS FOR WINTER OPERATION SEE PAGE 18.

APPLICATION RECOMMENDATION FOR COILS

FIGURE 27 **PIPING ARRANGEMENTS**

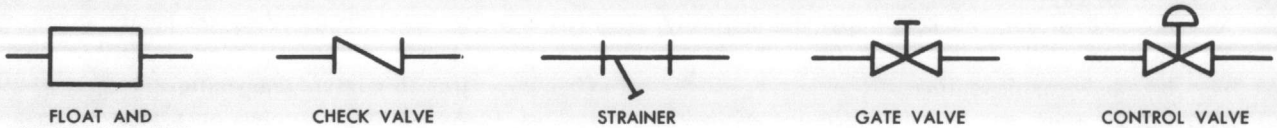

FLOAT AND THERMOSTATIC TRAP | CHECK VALVE | STRAINER | GATE VALVE | CONTROL VALVE MODULATING TWO POSITION

HIGH PRESSURE (OVER 25 PSI)

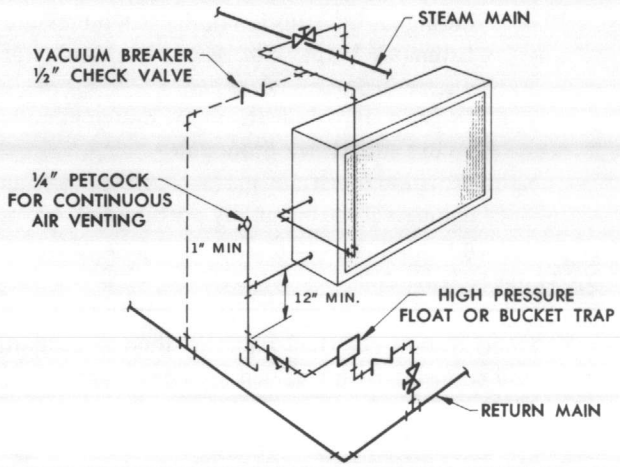

5GA or 8GA Coils. Note the addition of a vacuum breaker to permit the coil to drain during shutdown.

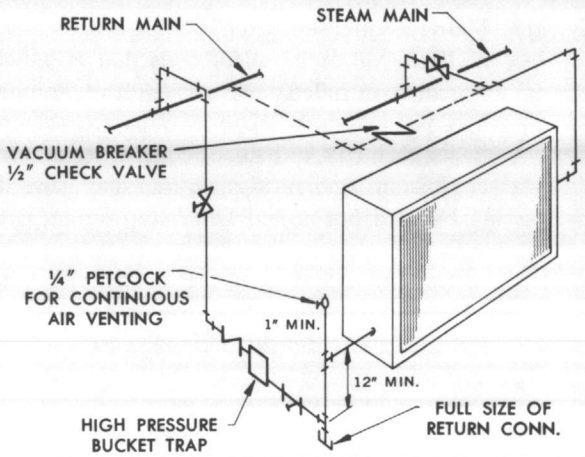

5TA, 8TA, 5HA, or 5HB Coils. Condensate is lifted to overhead return main.

LOW PRESSURE (TO 25 PSI)

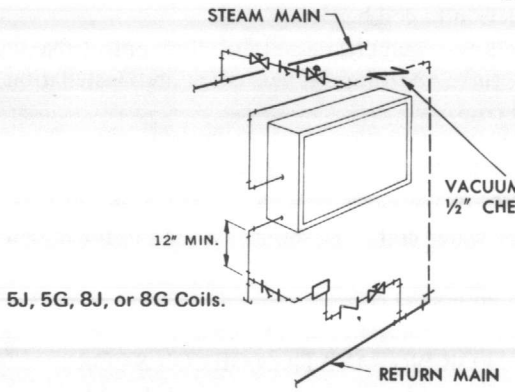

5J, 5G, 8J, or 8G Coils.

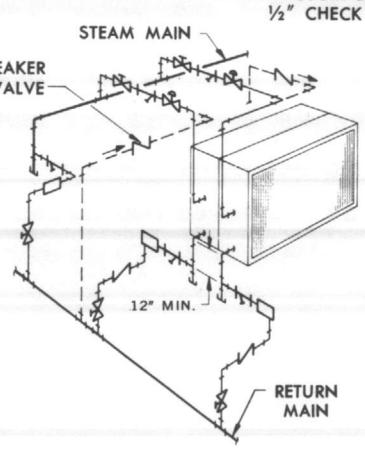

5JA or 8JA Coil installed in series. Note that each coil must have a separate control valve and trap.

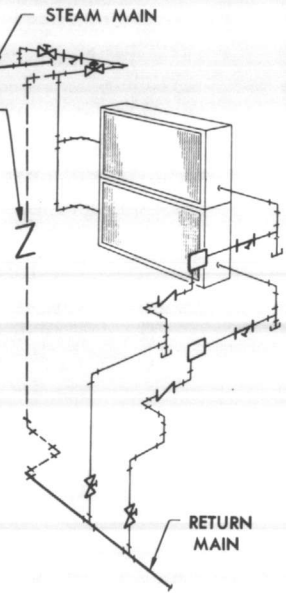

5RA, 8RA, 5SA, or 5SB Coils banked two high. Individual trapping of each coil as shown is preferred.

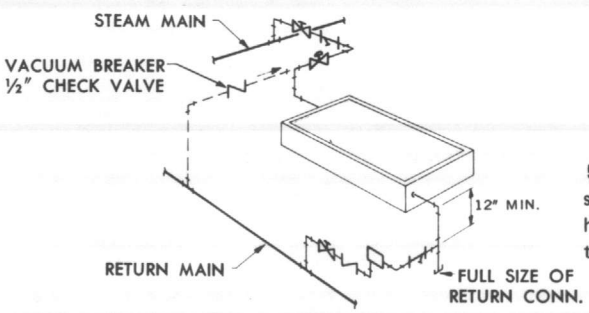

5RA, 8RA, 5SA or 5SB Coils installed for vertical air flow.

FIELD INSTALLATION OR REMOVAL OF COILS

In all cases, the end panel of the coil section is removable. You should have access to both ends of the unit for ease of installation and proper positioning of baffles. The procedure outlined is for installation of coils. To remove coils, reverse the procedure.

A. **Cooling Coils**

1. Models LSL-MSL 103-172 H & V, LML-MMM 137-172, Figure 28, Page 22.
   a. Slide coil through opening in coil section onto bottom coil rests. Coil should be placed against baffles or existing coil in unit to prevent air bypass.
   b. Attach coil mounting angle to top coil rest and bolt header plates to bottom coil rest and coil mounting angle.
   c. Locate coil supply, return, vent and drain connections dimensionally and drill holes in end panels of unit. Holes should be located very carefully.
   d. Attach end panel to unit and slip grommets over connections to prevent air leakage.
2. Models LML-MMM 106-228, Figure 29, Page 23.
   a. Slide coil through opening in coil section onto bottom coil rests. Coil should be placed against coil mounting angle at top and condensate shield at bottom.
   b. Coil is held in place with 1/4-20 thread cutting screws through mounting angle and condensate shield into coil side plate.
   c. Locate coil supply, return, vent and drain connections dimensionally and drill holes in end panel of unit. Holes should be located very carefully.
   d. Attach end panel to unit and slip grommets over coil connections to prevent air leakage.

B. **Heating Coils—Water**

1. Models LSL-MSL 103-172 H & V, Figure 28, Page 22. Follow procedure as outlined in A. (Cooling Coils).
2. Models LML-MMM 106-172, Figure 30, Page 23.
   a. Slide coil into place.
   b. Bolt coil header plate to coil rests in unit.
   c. Locate coil supply, return, vent and drain connections dimensionally and drill holes in end panel of unit. Holes should be located very carefully.
   d. Attach end panel to unit and slip grommet over coil connections to prevent air leakage.

C. **Heating Coils—Steam**

Since coils are pitched in units, it is necessary to keep unit level to allow proper condensate drainage.

1. Models LSL-MSL 103-172 H & V, Figure 31, Page 23.
   a. Bolt parts "C" and "D" to bottom coil rest in unit. Holes in the coil rest that are used should be selected so the coil will be as close as possible to baffles or existing coil in unit.
   b. Slide coil into unit with part "D" hooked into flanges of bottom side plate of coil.
   c. Lift up coil so it rides over part "C" and slide coil in until the return connection end drops down. Part "C" provides adequate pitch and should be on end of coil opposite the return connection.
   d. Bolt parts "A" and "B" to top coil rests in unit with 5/16 inch bolts and nut clips.
   e. Locate dimensionally the supply and return connections and drill holes in end panels for connections.
   f. Attach end panels to unit and slip grommets over connections to prevent air leakage.
2. Models LML-MMM 106-172, Figure 30, Page 23.
   a. Slide coil into unit.
   b. Place spacer under coil at end opposite the return connection and bolt spacer to coil rest.
   c. Bolt side plate of coil to spacer at one end, and coil rest at other end.
   d. Locate dimensionally the supply and return connections and drill holes in end panel of unit. Holes should be located very carefully.
   e. Attach end panels to unit and slip grommets over connections to prevent air leakage.

D. **Heating Coils—Steam & Water Seasonvent Units**

1. The 1 and 2 row coils are uncased coils.
2. Loosen screws holding vertical baffles and spread the baffles apart. (137 and larger)
3. Slide coil slab into coil section. There are fin channels to guide the coil through the section.
4. Slide vertical baffles in place against the fins and tighten the screws holding the baffles in place. (137 and larger)
5. Locate dimensionally the supply and return connections and drill holes in end panels of unit. Holes should be located very carefully.
6. Attach end panels to unit and slip grommets over connections to prevent air leakage.

FIELD INSTALLATION OR REMOVAL OF COILS

FIGURE 28 — **COIL MOUNTING PROCEDURE FOR 5W & 5E COILS LSL-MSL 103 THRU 172 & LML-MMM 137 THRU 172 HORIZONTAL & VERTICAL UNITS**

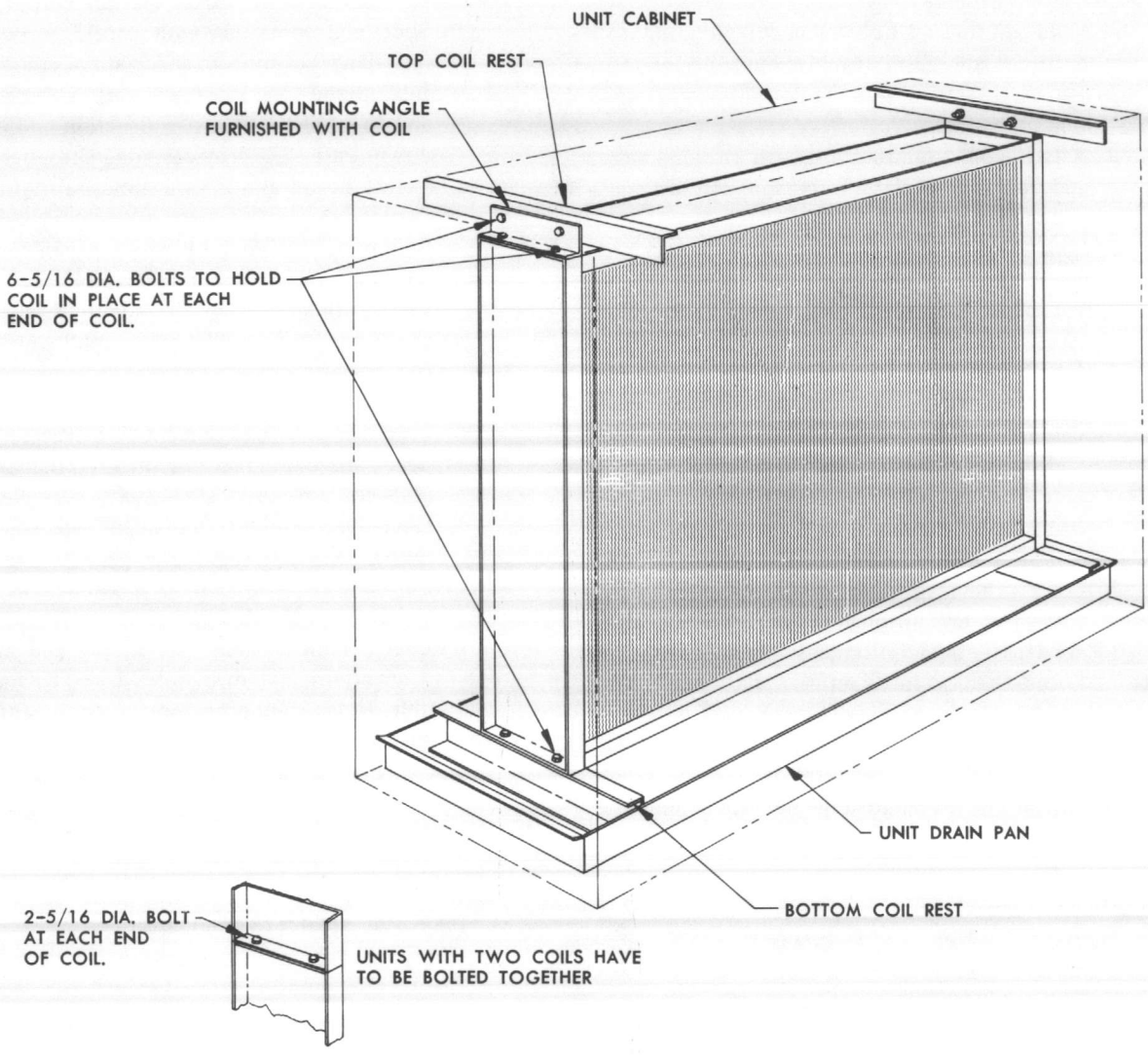

FIELD INSTALLATION OR REMOVAL OF COILS

FIGURE 29 **COIL MOUNTING PROCEDURE FOR 5W & 5E COILS LML-MMM 106 THRU 228**

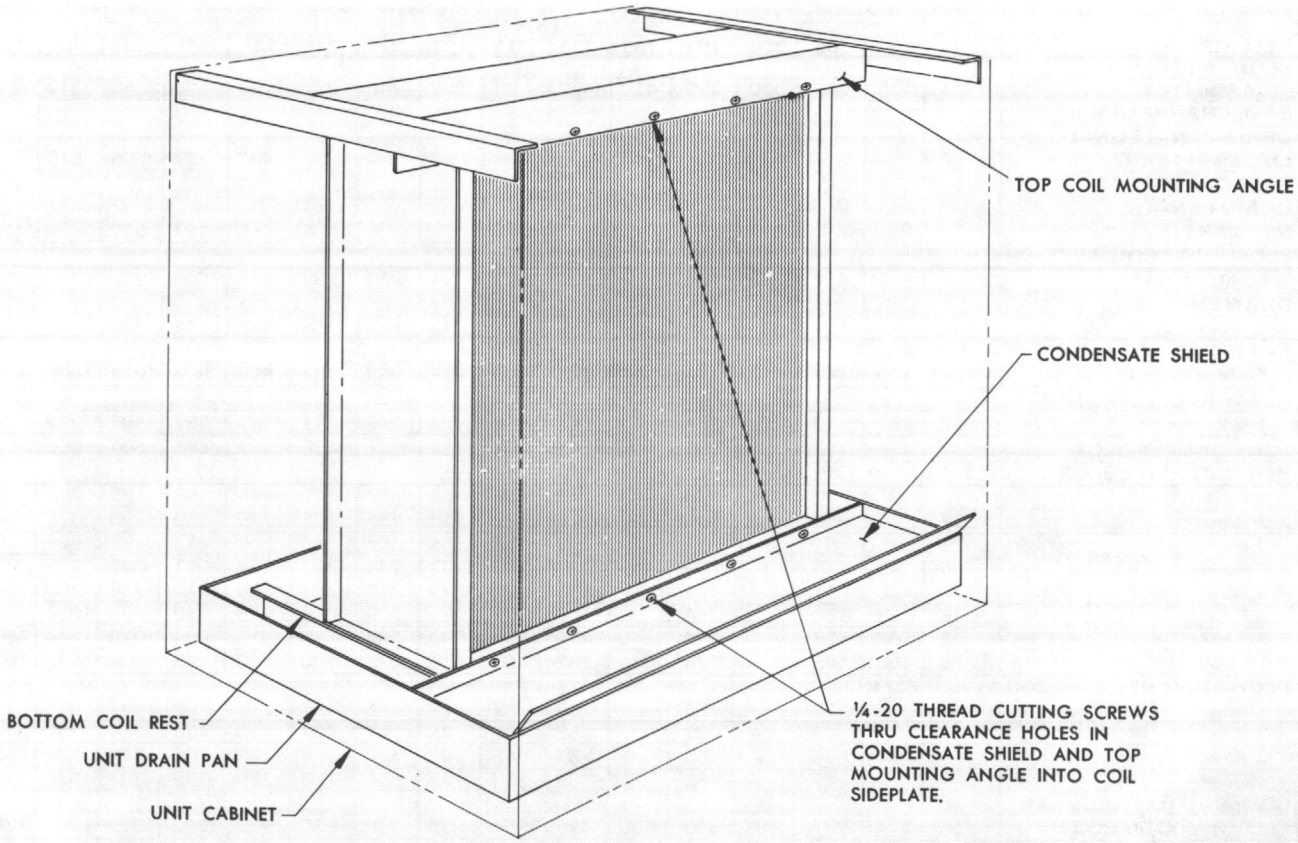

FIGURE 30 LML-MMM HEATING COIL

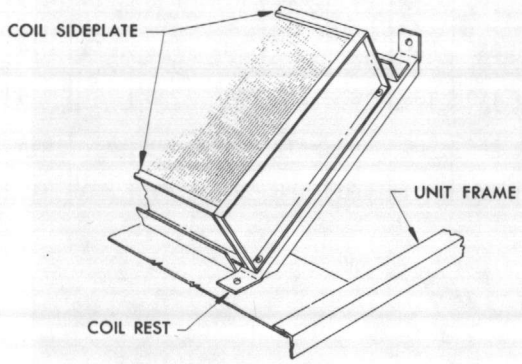

LML-MMM WATER HEATING COILS

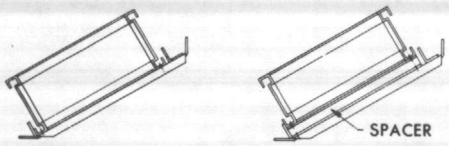

RETURN END OF LML-MMM STEAM HEATING COIL

LML-MMM STEAM HEATING COILS, SPACER OPPOSITE RETURN END OF COIL

FIGURE 31 LSL-MSL HEATING COIL

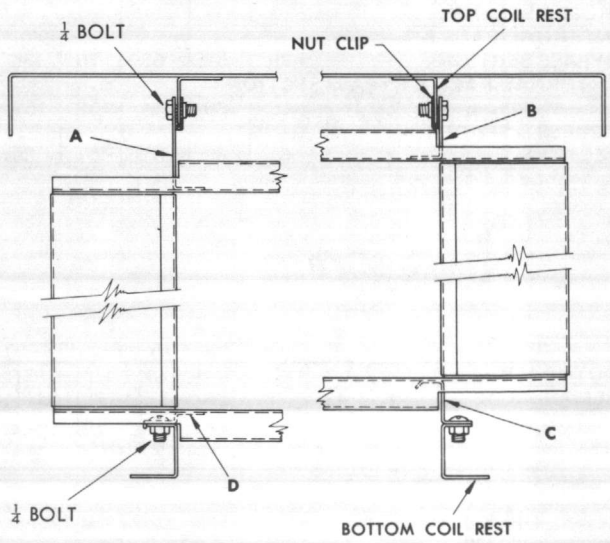

Seasonmaster® AND Seasonvent®

CENTRAL STATION AIR HANDLING UNITS

APPROXIMATE SHIPPING WEIGHTS

	UNIT SIZE															
DESCRIPTION	103	104	106	206	108	209	111	214	217	222	228	137	141	150	164	172
BLOWER SECTION																
Lo-Med Press.	144	175	260	330	396	430	459	529	602	740	982	1290	1600	2360	3210	3210
BASE CHANNELS & DRAIN PAN–LSL-MSL-LML-MMM-HORIZ.	–	–	–	–	–	–	–	–	–	–	–	490	552	586	613	–
BASE CHANNELS & DRAIN PAN–LSL-MSL-VERT.	–	–	–	–	–	–	–	–	–	–	–	416	467	522	–	–
BLOW THRU COIL SECTION																
Lo-Med Press.	–	–	411	–	453	–	531	652	734	853	996	1636	1709	1998	2367	2454
DRAW THRU COIL SECTION–VERTICAL	135	145	171	–	230	–	278	307	342	486	555	977	1144	1322	–	–
DRAW THRU COIL SECTION–HORIZONTAL																
Lo-Med Press.	108	120	142	–	144	–	176	203	228	283	324	855	954	1017	1096	1151
HEATING COIL SECTION																
1 & 2 Row	52	59	72	79	81	93	93	112	124	149	177	267	282	297	325	325
ZONE DAMPER SECT.	–	–	110	–	119	–	147	189	126	241	406	467	467	506	568	568
HEATING AND COOLING COILS (LFA)–ALUM. FINS																
1 Row	13	21	29	31	38	42	48	58	68	83	101	146	158	188	226	267
2 Rows	22	30	45	48	58	66	76	92	110	135	165	236	258	308	376	444
3 Rows	28	39	61	–	84	–	108	134	154	197	260	370	412	485	609	706
4 Rows	35	49	76	–	104	–	135	166	192	244	323	459	511	602	756	877
5 Rows	42	58	91	–	124	–	161	199	229	292	386	549	611	719	903	1047
6 Rows	49	68	106	–	144	–	187	231	266	339	449	638	710	836	1050	1218
8 Rows	63	87	136	–	184	–	239	296	340	434	575	817	909	1070	1344	1559
10 Rows	76	106	165	–	225	–	292	360	415	529	700	995	1108	1304	1638	1900
BLOW THRU HEATING COILS–ALUM. FINS																
1 Row	–	–	20	–	25	–	32	39	47	55	67	73	79	94	113	113
2 Rows	–	–	29	–	37	–	50	61	73	87	107	118	126	154	188	188
3 Rows	–	–	38	–	50	–	67	85	102	122	166	185	206	242	305	305
4 Rows	–	–	47	–	62	–	83	106	127	151	206	230	256	301	378	378
COMBINATION ANGULAR FILTER MIXING BOX	155	214	281	310	330	400	426	554	635	768	932	1238	1392	1512	1793	1793
VERTICAL ANGULAR FILTER & BASE	163	225	295	326	346	420	446	581	666	807	978	–	–	–	–	–
FLAT FILTER SECT.	39	49	62	78	86	96	118	140	161	189	232	278	303	342	416	458
ANGULAR FILTER SECTION	90	109	150	165	188	215	231	305	348	377	449	625	656	776	903	903
HEAVY DUTY FILTER SECTION	–	–	–	–	–	–	253	338	408	534	642	747	878	1046	1074	1074
INTERNAL FACE & BYPASS SECTION	39	51	65	70	75	90	102	119	136	167	210	216	238	267	315	–
EXTERNAL FACE & BYPASS SECTION																
Lo-Med Press.	69	86	114	132	152	172	221	264	306	367	419	614	697	822	996	1090
ACCESS & SPACER SECTION	61	69	81	91	89	105	107	118	129	159	188	248	296	340	415	–

	MOTOR WEIGHTS–STANDARD OPEN DRIP-PROOF 1800 RPM																		
MOTOR H.P.	1/4	1/3	1/2	3/4	1	1 1/2	2	3	5	7 1/2	10	15	20	25	30	40	50	60	75
NEMA FRAME	48	48	56	56	143T	145T	145T	182T	184T	213T	215T	254T	256T	284T	286T	324T	326T	364T	365T
MOTOR WEIGHT	17	22	32	32	39	48	48	75	91	126	150	225	255	330	410	500	560	670	850

ITEM 17

MCQUAY CHILLERS

Supplied by: Hoffman & Hoffman, Inc.
P.O. Box 77258
Greensboro, N.C. 27417
PH: 1-800-632-0432

Parts can be furnished by above supplier.

Installed by: Ramsey Air Conditioning, Inc.
P.O. Box 1333
Jacksonville, N.C. 28540
PH: (919) 455-0414

McQUAY AIR CONDITIONING

INSTALLATION AND MAINTENANCE DATA

BULLETIN NO. IM 268B
JUNE, 1984
FORM NO. 461422Y

SEASONPAK®
Packaged air cooled water chiller

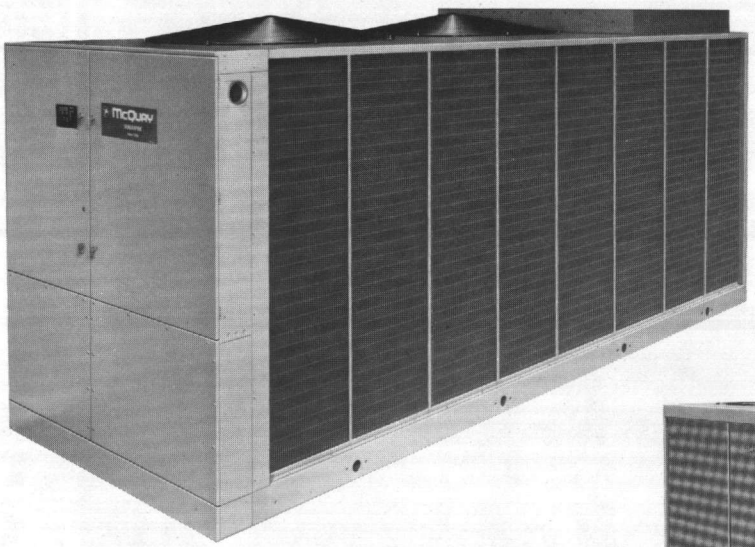

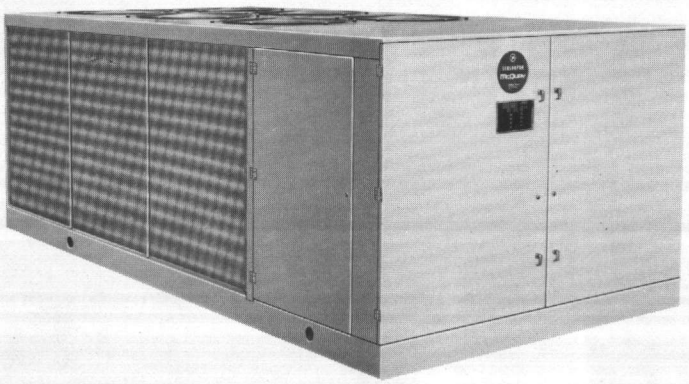

Models ALR-035A thru -094A, -060B thru -130B & 145A

McQUAY AIR CONDITIONING 13600 Industrial Park Blvd., P.O. Box 1551, Minneapolis, MN 55440

TABLE OF CONTENTS

INTRODUCTION
- General Description 3
- Nomenclature 3
- Inspection 3

INSTALLATION
- Handling 3
- Location 3
- Service Access 3,4
- Vibration Isolators 4,5
- Water Piping 6
- Chilled Water Thermostat 6
- Flow Switch 6
- Water Connections 6
- Dimensional Drawings 7
- Refrigerant Charge 8
- Field Wiring 8-10
  - Wire Sizing Ampacities & Recommended Power Lead Wire Sizes 8
  - Compressor & Condenser Fan Motors 9
  - Typical Field Wiring 10

UNIT LAYOUT & PRINCIPLES OF OPERATION
- Major Component Locations 11
- Control Center 12,13
- Sequence of Operation 13,14
- Refrigerant Piping Schematic 14
- Electrical Legend 14
- Power Schematics 15-17
- Compressor Control Schematics 18-37

START-UP & SHUTDOWN
- Pre Start-Up 38
- Start-Up 38
- Temporary Shutdown 38
- Start-Up After Temporary Shutdown 38
- Extended Shutdown 39

SYSTEM MAINTENANCE
- General 39
- Fan Shaft Bearings 39
- Electrical Terminals 39
- Compressor Oil Level 39
- Condensers 39
- Refrigerant Sightglass 40
- Lead-Lag 40

SERVICE
- Filter-Driers 40
- Liquid Line Solenoid Valve 40
- Thermostatic Expansion Valve 40,41
- Evaporator 41

IN-WARRANTY RETURN MATERIAL PROCEDURE
- Compressor 42
- Components Other Than Compressors 42

APPENDIX

STANDARD CONTROLS
- Oil Pressure Safety Control 42
- High Pressure Control 43
- Low Pressure Control 43
- Freeze Control 43
- FANTROL – Head Pressure Control 43,44

OPTIONAL CONTROLS
- SPEEDTROL – Head Pressure Control 44
- DAMPERTROL – Head Pressure Control 44
- Part Winding Start 45
- Low Ambient Start 45
- Compressor Lockout 45
- Hot Gas Bypass 46

TROUBLE SHOOTING CHART 47

"DAMPERTROL," "FANTROL," "McQUAY," "SEASONPAK" and "SPEEDTROL" are registered trademarks of McQuay Inc., Minneapolis, Minnesota.

INTRODUCTION

GENERAL DESCRIPTION

McQuay type ALR SEASONPAK air cooled water chillers are complete, self-contained automatic refrigerating units that include the latest in engineered components arranged to provide a compact and efficient unit. Each unit is completely assembled and factory wired before evacuation, charging and testing, and comes complete and ready for installation. Each unit consists of: twin air cooled condensers with integral subcooler sections, multiple accessible hermetic compressors, replaceable tube dual circuit shell-and-tube evaporator, and complete refrigerant piping. Liquid line components that are included are: manual liquid line shut-off valves, replaceable core filter-driers, liquid line solenoid valves, sightglass/moisture indicators, and double diaphragm hydraulic element thermal expansion valves. Other features include: compressor crankcase heaters, an evaporator heater for chilled water freeze protection, recycling pumpdown during "on" or "off" seasons, compressor lead lag switch to alternate the compressor starting sequence, and sequenced starting of compressors.

The electrical control center includes all safety and operating controls necessary for dependable automatic operation. Compressors and fan motors are fused in all three conductor legs and started by their own three-pole contactor.

NOMENCLATURE

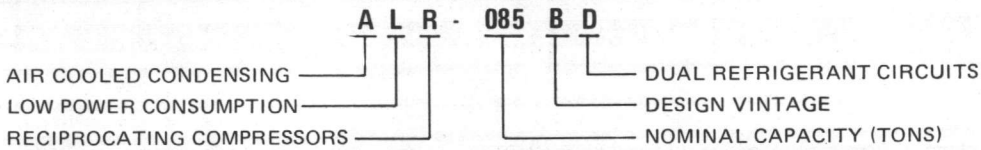

INSPECTION

When the equipment is received, all items should be carefully checked against the bill of lading to insure a complete shipment. All units should be carefully inspected for damage upon arrival. All shipping damage should be reported to the carrier and a claim should be filed. The unit serial plate should be checked before unloading the unit to be sure that it agrees with the power supply available.

INSTALLATION

NOTE: Installation and maintenance are to be performed only by qualified personnel who are familiar with local codes and regulations, and experienced with this type of equipment. CAUTION: Sharp edges and coil surfaces are a potential injury hazard. Avoid contact with them.

HANDLING

Care should be taken to avoid rough handling or shock due to dropping the unit. Do not push or pull the unit from anything other than the base, and block the pushing vehicle away from the unit to prevent damage to the sheet metal cabinet and end frame. (See Figure 1.)

Never allow any part of the unit to fall during unloading or moving as this may result in serious damage.

To lift the unit, 2½" diameter lifting holes are provided in the base of the unit. Spreader bars and cables should be arranged to prevent damage to the condenser coils or unit cabinet. (See Figure 2.)

LOCATION

Due to the vertical condenser design, it is recommended that certain precautions be taken before installation to orient the unit so that prevailing winds blow parallel to the unit length, thus minimizing effects on condensing pressure. If it is not practical to orient the unit in this manner, a wind deflecting fence should be considered.

SERVICE ACCESS

Each end of the unit must be accessible after installation for periodic service work. Compressors, filter-driers, and manual liquid line shut-off valves are accessible from the control center end of the unit through removable access panels on unit sizes 075, 085, and 105 through 145 and hinged side access doors on unit sizes 035 through 065, 076, 084 and 094. All operational, safety, and starting controls are located in the unit control center. Capped connections for field service gauges are also located inside these enclosures.

FIGURE 1. SUGGESTED PUSHING ARRANGEMENT

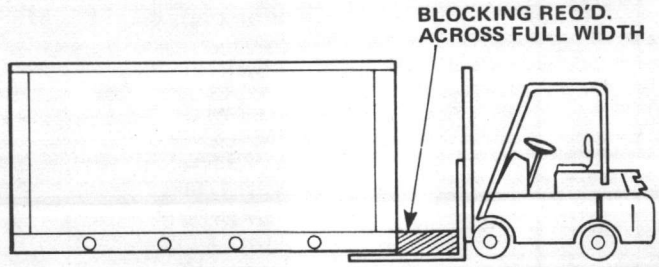

FIGURE 2. SUGGESTED LIFTING ARRANGEMENT

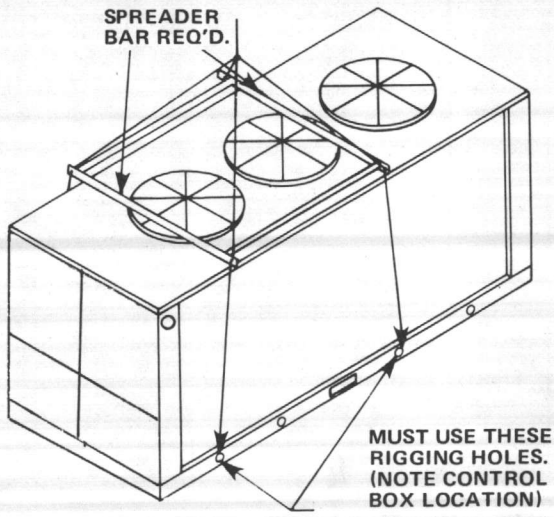

CAUTION: *Disconnect all power to the unit while servicing condenser fan drives.*

The condenser fans, motors and drives are accessible through a walk-in, keylocked access door on units ALR-075, 085, and 095 through 130. The access door on units ALR-075B, 085B, and 105 through 145 is located at the end of the unit opposite the control center. Expansion valves are accessible from the same access door on units 075 through 145 and from side access doors at the control center on unit sizes 035A through 065B.

An internal fan guard is located below the condenser fans and drives on units 075 through 145. This guard must be removed to service the fan drives but must always be reinstalled when service work is complete.

FIGURE 3. CLEARANCE AROUND UNIT

ALR-035A thru 065B, 076A, 084A and 094A

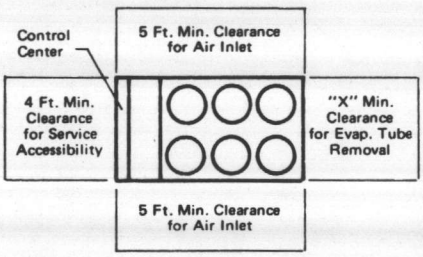

ALR UNIT SIZE	"X" DIM. (FT.)
035A	6
040A	9
050A	7
060B	8
065B	9
076A	7
084A	8
094A	10

ALR-075B thru 130B & 145A

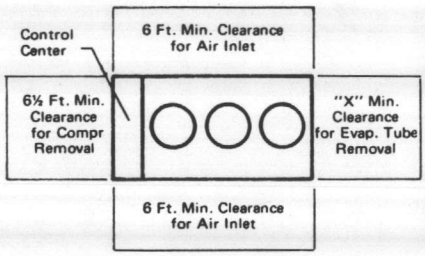

ALR UNIT SIZE	"X" DIM. (FT.)
075B	4
085B	4
105B	9
110B	7
120B	7
130B & 145A	9

NOTES: (1) Minimum vertical clearance above unit should be 10 feet.
(2) Clearance to condenser coil must be doubled if more than one side is obstructed or between adjacent units. Consult your McQuay sales representative.

VIBRATION ISOLATORS

Vibration isolators are recommended for all roof mounted installations or wherever vibration transmission is a consideration. Table 1 lists spring isolators for all ALR unit sizes. Figure 4 shows isolator locations in relation to the unit control center. Figure 5 gives dimensions that are required to secure each McQuay isolator selection to the mounting surface.

Table 2 shows the isolator loads at each location shown in Figure 4, and the maximum loads for each McQuay selection.

TABLE 1. VIBRATION ISOLATORS

ALR UNIT SIZE	SPRING ISOLATORS					
	LOCATIONS 1 & 4		LOCATIONS 2 & 5		LOCATIONS 3 & 6	
	ORDERING NO. 877-	SPRING COLOR CODE	ORDERING NO. 877-	SPRING COLOR CODE	ORDERING NO. 877-	SPRING COLOR CODE
035A	(1)216403B-31	GRAY WITH 2 YELLOW STRIPES	(2)216403B-28	GRAY WITH GREEN STRIPE	216403B-26	GRAY WITH 2 WHITE STRIPES
	(4)216403B-27	GRAY WITH ORANGE STRIPE	(5)216403B-27	GRAY WITH ORANGE STRIPE		
040A	216403B-31	GRAY WITH 2 YELLOW STRIPES	216403B-31	GRAY WITH 2 YELLOW STRIPES	216403B-31	GRAY WITH 2 YELLOW STRIPES
050A	216403B-31	GRAY WITH 2 YELLOW STRIPES	216403B-31	GRAY WITH 2 YELLOW STRIPES	216403B-31	GRAY WITH 2 YELLOW STRIPES
060B	216403B-32	GRAY WITH WHITE STRIPE	216403B-32	GRAY WITH WHITE STRIPE	216403B-32	GRAY WITH WHITE STRIPE
065B	216403B-32	GRAY WITH WHITE STRIPE	216403B-32	GRAY WITH WHITE STRIPE	216403B-32	GRAY WITH WHITE STRIPE
075B	216404B-28	GRAY WITH GREEN STRIPE	216404B-28	GRAY WITH GREEN STRIPE	216404B-27	GRAY WITH ORANGE STRIPE
076A	216403B-32	GRAY WITH WHITE STRIPE	216403B-32	GRAY WITH WHITE STRIPE	216403B-32	GRAY WITH WHITE STRIPE
084A	216404B-27	GRAY WITH ORANGE STRIPE	216404B-27	GRAY WITH ORANGE STRIPE	216404B-27	GRAY WITH ORANGE STRIPE
085B	216404B-28	GRAY WITH GREEN STRIPE	216404B-28	GRAY WITH GREEN STRIPE	216404B-27	GRAY WITH ORANGE STRIPE
094A	216404B-27	GRAY WITH ORANGE STRIPE	216404B-28	GRAY WITH GREEN STRIPE	216404B-28	GRAY WITH GREEN STRIPE
105B	216404B-31	GRAY WITH 2 YELLOW STRIPES	216404B-31	GRAY WITH 2 YELLOW STRIPES	216404B-31	GRAY WITH 2 YELLOW STRIPES
110B	216404B-31	GRAY WITH 2 YELLOW STRIPES	216404B-31	GRAY WITH 2 YELLOW STRIPES	216404B-31	GRAY WITH 2 YELLOW STRIPES
120B	216404B-32	GRAY WITH WHITE STRIPE	216404B-32	GRAY WITH WHITE STRIPE	216404B-32	GRAY WITH WHITE STRIPE
130B 145A	216404B-32	GRAY WITH WHITE STRIPE	216404B-32	GRAY WITH WHITE STRIPE	216404B-32	GRAY WITH WHITE STRIPE

TABLE 2. ISOLATOR LOADS

ALR UNIT SIZE	ISOLATOR LOADS AT EACH MOUNTING LOCATION (LBS.)			MAXIMUM LOADS ALLOWABLE FOR EACH McQUAY ISOLATOR SELECTION (LBS.)		
	1 & 4	2 & 5	3 & 6	1 & 4	2 & 5	3 & 6
035A	(1)787 (4)569	(2)541 (5)459	466	(1)1100 (4) 750	(2)900 (5)750	600
040A	684	705	750	1100	1100	1100
050A	789	813	867	1100	1100	1100
060B	894	916	984	1300	1300	1300
065B	924	958	1066	1300	1300	1300
075B	1095	1095	930	1800	1800	1500
076A	980	1050	1050	1300	1300	1300
084A	1045	1125	1125	1500	1500	1500
085B	1150	1150	915	1800	1800	1500
094A	965	1255	1245	1500	1800	1800
105B	1310	1310	1258	2200	2200	2200
110B	1370	1370	1270	2200	2200	2200
120B	1480	1480	1480	2600	2600	2600
130B & 145A	1570	1570	1540	2600	2600	2600

FIGURE 4. ISOLATOR LOCATIONS

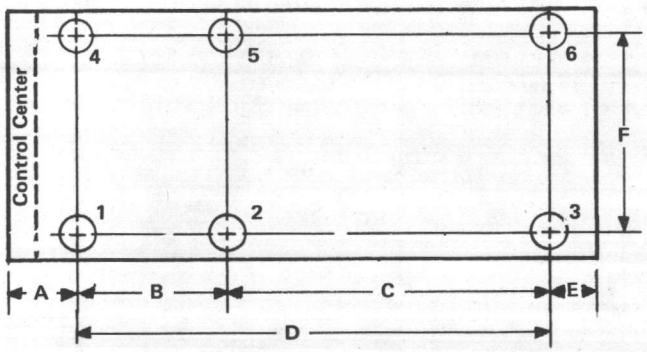

ALR UNIT SIZE	VIBRATION MOUNT LOCATION DIMENSIONS (INCHES)					
	A	B	C	D	E	F
035A	8.5	41.5	69.5	111.0	8.5	78
040A	8.5	41.5	98.0	139.5	20.0	78
050A	8.5	41.5	98.0	139.5	20.0	78
060B	8.5	41.5	138.0	179.5	20.0	78
065B	8.5	41.5	138.0	179.5	20.0	78
075B	16.7	76.0	114.0	190.0	30.0	80
076A	8.5	41.5	138.0	179.5	20.0	78
084A	8.5	41.5	138.0	179.5	20.0	78
085B	16.7	76.0	114.0	190.0	30.0	80
094A	8.5	41.5	138.0	179.5	20.0	78
105B	16.7	76.0	114.0	190.0	30.0	80
110B	16.7	76.0	114.0	190.0	30.0	80
120B	16.7	76.0	114.0	190.0	30.0	80
130B	16.7	76.0	114.0	190.0	30.0	80
145A	16.7	76.0	114.0	190.0	30.0	80

FIGURE 5. SPRING ISOLATORS

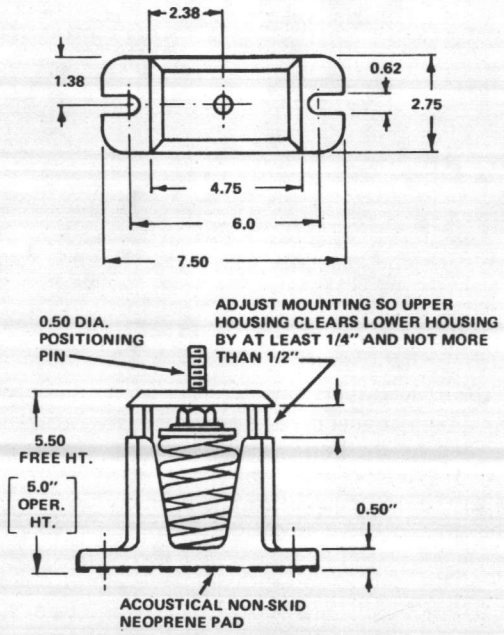

ORDERING NO. 877-216403B-26 THRU -32

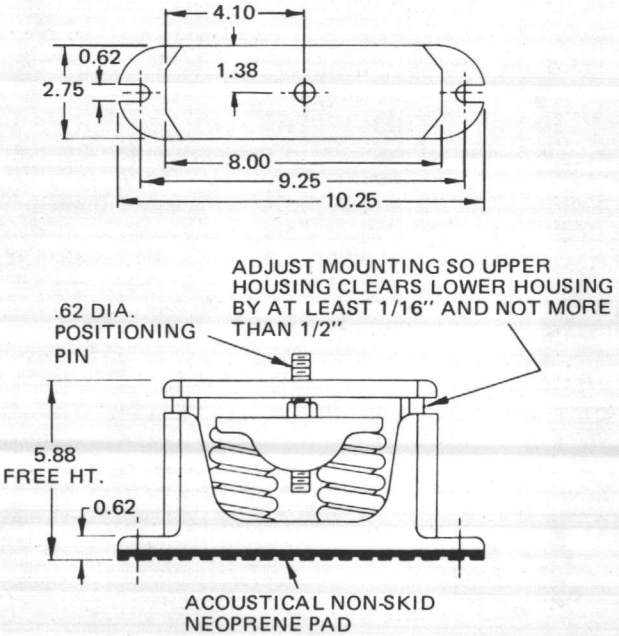

ORDERING NO. 877-216404B-27 THRU -32

WATER PIPING

Due to the variety of piping practices, it is advisable to follow the recommendations of local authorities. They can supply the installer with the proper building and safety codes required for a safe and proper installation.

Basically, the piping should be designed with a minimum number of bends and changes in elevation to keep system cost down and performance up. It should contain:

1. Vibration eliminators to reduce vibration and noise transmission to the building.
2. Shut-off valves to isolate the unit from the piping system during unit servicing.
3. Manual or automatic air vent valves at the high points of the system.
4. Some means of maintaining adequate system water pressure (e.g., expansion tank or regulating valve).
5. Temperature and pressure indicators located at the unit to aid in unit servicing.
6. A strainer or some means of removing foreign matter from the water before it enters the pump. It should be placed far enough upstream to prevent cavitation at the pump inlet (consult pump manufacturer for recommendations). The use of a strainer will prolong pump life and thus keep system performance up.
7. The shell-and-tube cooler has a thermostat and heating cable to prevent freeze-up down to $-20^{o}F$. The heating cable must be wired in the field. It is suggested that the heating cable be wired to a separate 110V supply circuit but it can be field wired to the control transformer (on units with optional transformer). Any water piping to the unit must also be protected to prevent freezing.

Prior to insulating the piping and filling the system, a preliminary leak check should be made.

Piping insulation should include a vapor barrier to prevent moisture condensation and possible damage to the building structure. It is important to have the vapor barrier on the outside of the insulation to prevent condensation within the insulation on the cold surface of the pipe.

WATER COOLED CONDENSER FREEZE PROTECTION

CAUTION: *Condenser freeze protection is not provided with heat recovery units.* If freeze protection is required, it can be accomplished in one of the following ways:

1. Wrap condenser and condenser water piping with heat tape and insulate.
2. Circulate warm water through condenser during freeze conditions.
3. Use an ethylene glycol solution in the condenser circuit.

CHILLED WATER THERMOSTAT

The chilled water thermostat is mounted inside the unit control center. On models ALR-075B, 085B, and 105 through 145 the thermostat sensor is factory mounted in the return water connection of the evaporator. On models ALR-035A through 065B the sensor must be installed in the return water line as shown in Figure 6. The thermostat sensor should be insulated after installation. On models ALR-076A, 084A and 094A the sensor must be mounted in the return water connection of the evaporator.

FIGURE 6. THERMOSTAT SENSOR INSTALLATION

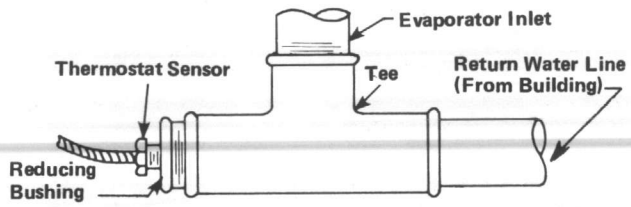

FLOW SWITCH

A WATER FLOW SWITCH MUST BE MOUNTED in either the entering or leaving water line to insure that there will be adequate water flow and cooling load to the evaporator before the unit can start. This will safeguard against slugging the compressors on start-up. It also serves to shut down the unit in the event that water flow is interrupted to guard against evaporator freeze-up.

A flow switch is available from Mcquay under ordering number 860-175033X-00. It is a "paddle" type switch and adaptable to any pipe size from 1" to 6" nominal. Certain minimum flow rates are required to close the switch and are listed in Table 3. Installation should be as shown in Figure 7.

Electrical connections in the unit control center should be made at terminals 6 and 11 on unit sizes 035A through 065B, 076A, 084A and 094A, and at terminals 8 and 9 on unit sizes 075B, 085B, and 105 through 145. The normally open contacts of the flow switch should be wired between these two terminals. There is also a set of normally closed contacts on the switch that could be used for an indicator light or an alarm to indicate when a "no flow" condition exists.

TABLE 3. FLOW SWITCH MINIMUM FLOW RATES

NOMINAL PIPE SIZE (INCHES)	MINIMUM REQUIRED FLOW TO ACTIVATE SWITCH (GPM)
1	6.00
1 1/4	9.80
1 1/2	12.70
2	18.80
2 1/2	24.30
3	30.00
4	39.70
5	58.70
6	79,20

FIGURE 7

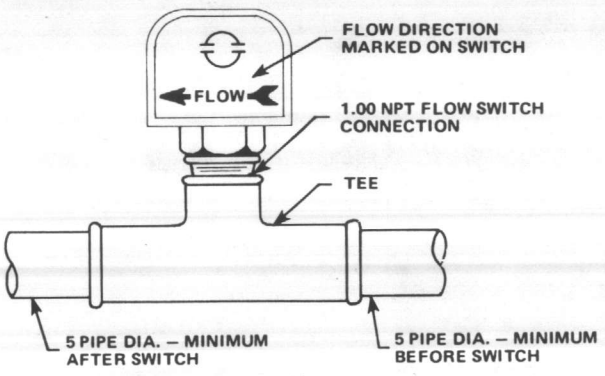

WATER CONNECTIONS

Water piping connections at the unit vary in size and style depending on the baffle option ordered. These connection variations are shown in the table with Figure 8. Piping through the unit cabinet can be through the end or bottom of the unit as the application dictates. Models ALR-035A through 065B, 076A, 084A, and 094A have holes at the back of the unit as shown in Figure 8. Pilot holes on unit sizes 075B, 085B, and 105 through 145 locate the proper hole centers for piping through the end of the unit. Figure 8 gives the necessary dimensions for either piping method.

FIGURE 8. ALR DIMENSIONAL DRAWINGS

ALR-035A thru 065B, 076A, 084A, and 094A

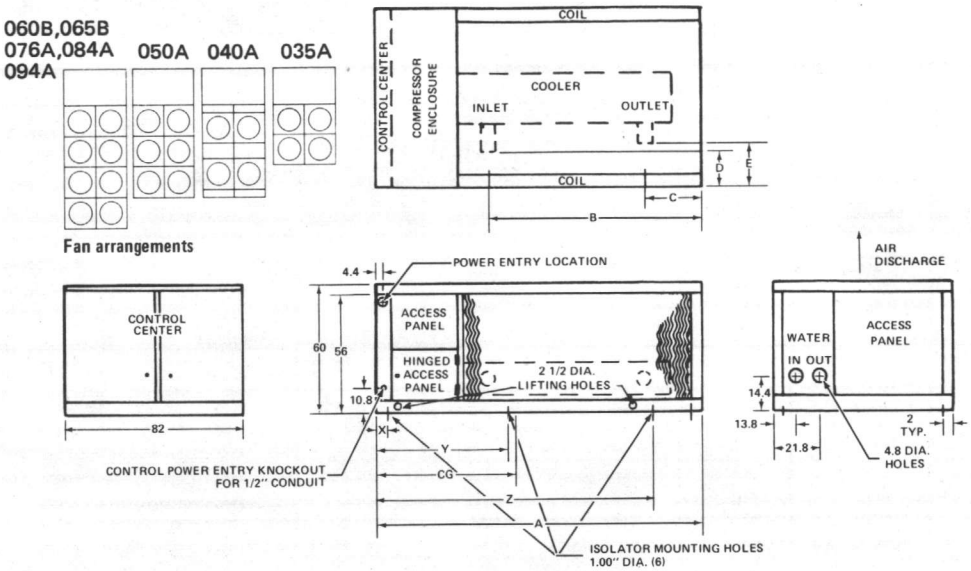

ALR UNIT SIZE	LENGTH A	CENTER OF GRAVITY CG	WATER CONNECTIONS					ISOLATOR LOCATIONS		
			SIZE	B	C	D	E	X	Y	Z
035A	128	58	3 NPT	72.5	7.6	15.9	23.9	8.5	50.0	119.5
040A	168	71	3 NPT	112.5	11.6	15.9	23.9	8.5	50.0	148.0
050A	168	71	3 NPT	109.4	36.1	15.9	23.9	8.5	50.0	148.0
060B	208	85	4 NPS	149.4	64.1	18.9	26.9	8.5	50.0	188.0
065B	208	87	4 NPS	149.4	62.1	18.9	26.9	8.5	50.0	188.0
076A	208	84	5*	148.3	77.0	18.5	27.4	8.5	50.0	188.0
084A	208	84	5*	148.3	65.0	18.5	27.4	8.5	50.0	188.0
094A	208	88.5	5*	148.3	41.0	18.5	27.4	8.5	50.0	188.0

*COOLER CONNECTIONS – All connections NPS steel pipe. Connections are furnished with grooves for victaulic couplings by others.

ALR-075B, 085B, and 105 thru 145

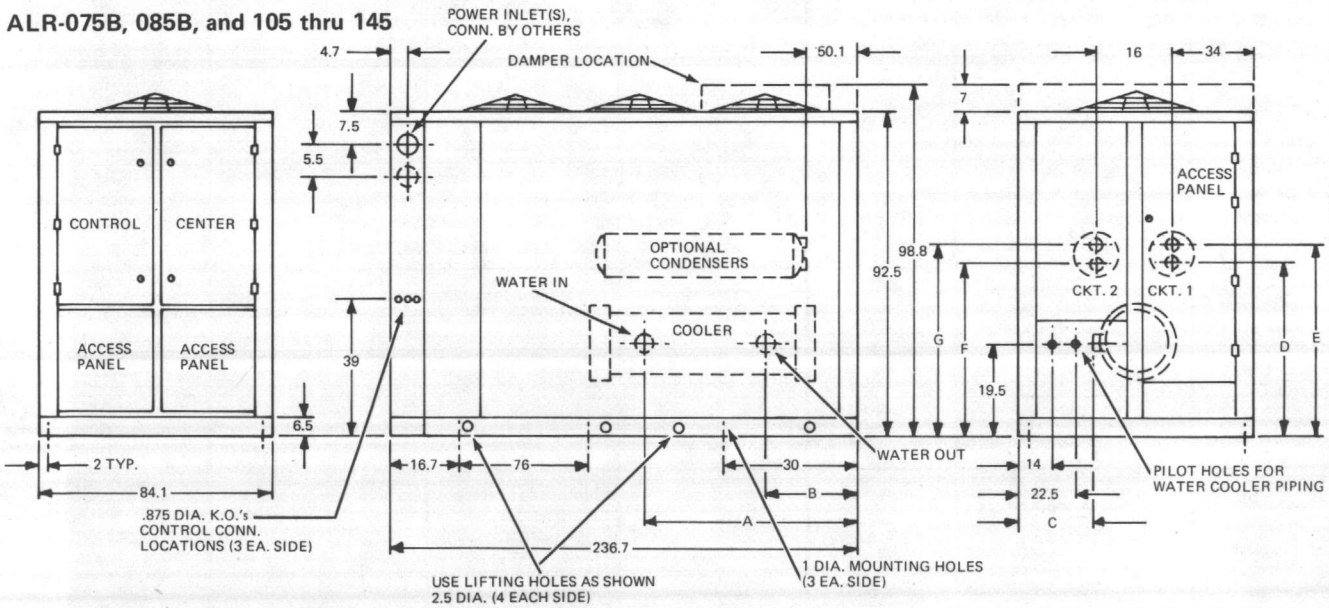

ALR MODEL	DIMENSIONS (INCHES)			WATER COOLER CONN.	CONDENSER CONNECTION NPT INT (2)		CKT. 1		CKT. 2		POWER ENTRY CONDUIT CONNECTION (NPT)	
	A	B	C	SIZE (1)	CKT. 1	CKT. 2	D	E	F	G	208/230 VOLT	460 VOLT
075B	140.5	69.3	28	5	2	3	39.8	44.0	40.2	45.2	(1) 4"	(1) 2 1/2"
085B	140.5	69.3	28	5	2	4	39.8	44.0	40.2	46.5	(1) 4"	(1) 2 1/2"
105B	140.5	33.3	28	5	3	3	40.2	45.2	40.2	45.2	(1) 4"	(1) 2 1/2"
110B	140.0	45.8	29	6	3	4	40.2	45.2	40.9	46.5	(1) 4"	(1) 2 1/2"
120B	140.0	45.8	29	6	4	4	40.9	46.5	40.9	46.5	(1) 4"	(1) 2 1/2"
130B,145A	140.0	33.8	29	6	4	4	40.9	46.5	40.9	46.5	(2) 3"	(1) 3"

(1) COOLER CONNECTIONS – All connections NPS steel pipe. Connections are furnished with grooves for victaulic couplings by others.
(2) It is recommended that the condenser water piping enter and exit through the upper left panel on the back of the unit, keeping the right-hand access panel unrestricted.

REFRIGERANT CHARGE

All units are designed for use with refrigerant 22 and are shipped with an operating charge. Table 4 gives the operating charge for each unit.

TABLE 4. R-22 OPERATING CHARGE

ALR UNIT SIZE	R-22 REFRIGERANT CHARGE (LBS.)			
	STANDARD UNIT		HEAT RECOVERY	
	CKT. 1	CKT. 2	CKT. 1	CKT. 2
035A	35	–	–	–
040A	25	25	–	–
050A	35	35	–	–
060B	35	35	–	–
065B	44	44	–	–
075B	50	60	151	161
076A	53	53	–	–
084A	56	56	–	–
085B	45	65	138	175
094A	58	58	–	–
105B	90	90	242	242
110B	90	90	242	242
120B	100	100	302	302
130B & 145A	110	110	312	312

FIELD WIRING

Wiring should be done in accordance with all applicable codes and ordinances.

Warranty is voided if wiring is not in accordance with specifications. An open fuse indicates a short, ground, or overload. Before replacing a fuse or restarting a compressor or fan motor, the trouble must be found and corrected.

Copper wire is required for all power lead terminations at the unit while either aluminum or copper can be used for all other wiring.

All unit sizes are set up as standard for separate 115 volt power supply circuits for the control circuit and cooler heater. The control circuit only or both the control circuit and cooler heater can be powered off of the main unit power supply if the optional control circuit transformer is ordered. It may be desirable, however, to have the unit cooler heater on a separate disconnect switch from the main unit power supply so that the unit may be shut down without defeating the freeze protection provided by the cooler heater.

TABLE 5. WIRE SIZING AMPACITIES & RECOMMENDED POWER LEAD WIRE SIZES

ALR UNIT SIZE	3 PHASE, 60HZ ELECTRICAL SUPPLY (1)	WIRE SIZING AMPS (2)	RECOMMENDED COPPER POWER LEAD WIRE SIZES (4)			RECOMMENDED FUSE SIZES (6)
			3 WIRES 1 CONDUIT	6 WIRES 1 CONDUIT	6 WIRES 2 CONDUITS	
035A	208	172	00	–	–	200
	230	172	00	–	–	200
	380, 460	87	3	–	–	100
040A	208	185	000	1	–	200
	230	185	000	1	–	200
	380, 460	94	3	–	–	100
050A	208	252	250	00	–	300
	230	252	250	00	–	300
	460	135	0	–	–	150
060B	208	291	350	000	–	350
	230	291	350	000	–	350
	380, 460	150	00	3	–	175
065B	208	354	500	0000	–	400
	230	335	500	0000	–	400
	380, 460	170	00	2	–	200
075B	208, 230	361, 357	500	0000	–	400, 400
	380, 460	181	00	–	–	200
076A	208	392	–	–	000	400
	230	362	500	–	–	400
	380, 460	182	000	–	–	200
084A	208	446	–	–	0000	500
	230	446	–	–	0000	500
	380, 460	226	0000	–	–	250
085B	208, 230	443, 439	600	300	–	500, 500
	380, 460	221	0000	–	–	250
094A	208	489	–	–	250	600
	230	489	–	–	250	600
	380, 460	244	250	–	–	300
105B	208, 230	482, 478	–	350	–	600, 600
	380, 460	242	250	0	–	300
110B	208, 230	523, 519	–	400	–	600, 600
	380, 460	262	250	00	–	300
120B	208, 230	564, 560	–	500	–	600, 600
	380, 460	282	300	00	–	300
130B 145A	208	700	–	–	500	800
	230	632	–	–	400	700
	380, 460	316	400	000	–	350

1. See below for voltage limits.
2. Wire sizing amps are equal to 125% of the RLA of the largest motor plus 100% of the RLA of all other loads in the circuit. Wire sizing amps shown are for unit with separate power supply for control circuit. If unit includes factory wired control circuit transformer, no separate 115V power source is required. Factory wiring of the control circuit does not change recommended power lead wire or recommended fuse size shown.
3. If an individual 115 volt power supply is used for the control circuit the wire sizing amps for this circuit should include 2 amps for ALR-012 – 035; 3 amps for ALR-040; 4 amps for ALR-050 – 060; 5 amps for ALR-065 – 085; 6 amps for ALR-105 – 120; and 9 amps for ALR-130.
4. Recommended power lead wire sizes for three conductors per conduit are based on 100% conductor ampacity at 86F ambient for no more than 3 conductors per conduit. Wire sizes for six conductors per conduit are based on 80% of the above mentioned conductor ampacity in accordance with NEC. Voltage drop has not been included. Therefore, it is recommended that power leads be kept short. All terminal block connections must be made with copper wire (type THW wire).
5. The unit power terminal block has two lugs per phase. Single or parallel conductors per phase may be used for power hook-up as listed under "Recommended Power Lead Wire Size."
6. "Recommended Fuse Sizes" are selected at approximately 150% of the largest compressor RLA, plus 100% of all other loads in the circuit. (Control circuit not included).

Figure 9 shows typical field wiring that is required for unit installation. On models ALR-035A through 065B, the flow switch, time clock and/or ambient thermostat are connected between terminals 6 and 11. On models ALR-075B through 130B, and 145A, the flow switch is wired to terminals 8 and 9 and the time clock and/or ambient thermostat are wired to terminals 9 and 10.

TABLE 6. COMPRESSOR AND CONDENSER FAN MOTORS

ALR UNIT SIZE	ELEC. SUPPLY	RATED LOAD AMPS (1)					NO. OF FAN MTRS.	LOCKED ROTOR AMPS (2)							
		COMPRESSOR				FAN MTRS. (EA)		FAN MTRS. (EA)	AL START COMPRESSOR				PW START COMPRESSOR			
		NO. 1	NO. 2	NO. 3	NO. 4				NO. 1	NO. 2	NO. 3	NO. 4	NO. 1	NO. 2	NO. 3	NO. 4
035A	208	121	–	–	–	5.2	4	40.0	565	–	–	–	340	–	–	–
	230	121	–	–	–	5.2	4	40.0	565	–	–	–	340	–	–	–
	280, 460	61	–	–	–	2.6	4	20.0	283	–	–	–	150	–	–	–
040A	208	64	80	–	–	5.2	4	40.0	308	428	–	–	188	250	–	–
	230	64	80	–	–	5.2	4	40.0	308	428	–	–	188	250	–	–
	380, 460	32	41	–	–	2.6	4	20.0	154	214	–	–	82	100	–	–
050A	208	98	98	–	–	5.2	6	40.0	470	470	–	–	292	292	–	–
	230	98	98	–	–	5.2	6	40.0	470	470	–	–	292	292	–	–
	380, 460	53	53	–	–	2.6	6	20.0	235	235	–	–	121	121	–	–
060B	208	98	121	–	–	5.2	8	40.0	470	565	–	–	292	340	–	–
	230	98	121	–	–	5.2	8	40.0	470	565	–	–	292	340	–	–
	380, 460	53	61	–	–	2.6	8	20.0	235	283	–	–	121	150	–	–
065B	208	121	153	–	–	5.2	8	40.0	565	625	–	–	340	388	–	–
	230	121	153	–	–	5.2	8	40.0	565	625	–	–	340	388	–	–
	380, 460	61	69	–	–	2.6	8	20.0	283	297	–	–	150	147	–	–
075B	208	121	80	–	80	16.7	3	101.0	565	428	–	428	340	250	–	250
	230	121	80	–	80	15.2	3	91.0	565	428	–	428	340	250	–	250
	380, 460	61	41	–	41	7.6	3	45.6	283	214	–	214	150	100	–	100
076A	208	153	153	–	–	5.2	8	40.0	670	670	–	–	406	406	–	–
	230	140	140	–	–	5.2	8	40.0	575	575	–	–	340	340	–	–
	380, 460	70.5	70.5	–	–	2.6	8	20.0	288	288	–	–	170	170	–	–
084A	208	177	177	–	–	5.2	8	40.0	1074	1074	–	–	646	646	–	–
	230	177	177	–	–	5.2	8	40.0	1074	1074	–	–	646	646	–	–
	380, 460	90	90	–	–	2.6	8	20.0	537	537	–	–	420	420	–	–
085B	208	121	121	–	121	16.7	3	101.0	565	565	–	565	340	340	–	340
	230	121	121	–	121	15.2	3	91.0	565	565	–	565	340	340	–	340
	380, 460	61	61	–	61	7.6	3	45.6	283	283	–	283	150	150	–	150
094A	208	196	196	–	–	5.2	8	40.0	1070	1070	–	–	644	644	–	–
	230	196	196	–	–	5.2	8	40.0	1070	1070	–	–	644	644	–	–
	380, 460	98	98	–	–	2.6	8	20.0	535	535	–	–	428	428	–	–
105B	208	80	121	80	121	16.7	3	101.0	428	565	428	565	250	340	250	340
	230	80	121	80	121	15.2	3	91.0	428	565	428	565	250	340	250	340
	380, 460	41	61	41	61	7.6	3	45.6	214	283	214	283	100	150	100	150
110B	208	80	121	121	121	16.7	3	101.0	428	565	565	565	250	340	340	340
	230	80	121	121	121	15.2	3	91.0	428	565	565	565	250	340	340	340
	380, 460	41	61	61	61	7.6	3	45.6	214	283	283	283	100	150	150	150
120B	208	121	121	121	121	16.7	3	101.0	565	565	565	565	340	340	340	340
	230	121	121	121	121	15.2	3	91.0	565	565	565	565	340	340	340	340
	380, 460	61	61	61	61	7.6	3	45.6	283	283	283	283	150	150	150	150
130B 145A	208	153	153	153	153	16.7	3	101.0	625	625	625	625	388	388	388	388
	230	138	138	138	138	15.2	3	91.0	594	594	594	594	340	340	340	340
	380, 460	69	69	69	69	7.6	3	45.6	297	297	297	297	147	147	147	147

NOTES: 1) Compressor rated load amps are at extreme unit operating conditions.
2) Fan motor nameplate and locked rotor amps from 1981 NEC tables 430-150 and 430-151.
3) Compressor locked rotor amps for part winding start are for the first winding.

Voltage limits

60 Hertz Electrical Systems:

Unit Nameplate 208V/60H/3P – 187V to 229V. (Except ALR-065B and ALR-130B: 187V to 220V).
Unit Nameplate 230V/60H/3P – 207V to 253V.
Unit Nameplate 460V/60H/3P – 414V to 506V.

50 Hertz Electrical Systems:

Unit Nameplate 380V/50H/3P – 360V to 418V.
Unit Nameplate 415V/50H/3P – 342V to 460V.

FIGURE 9. TYPICAL FIELD WIRING DIAGRAMS

ALR-035A thru 065B, 076A, 084A and 094A

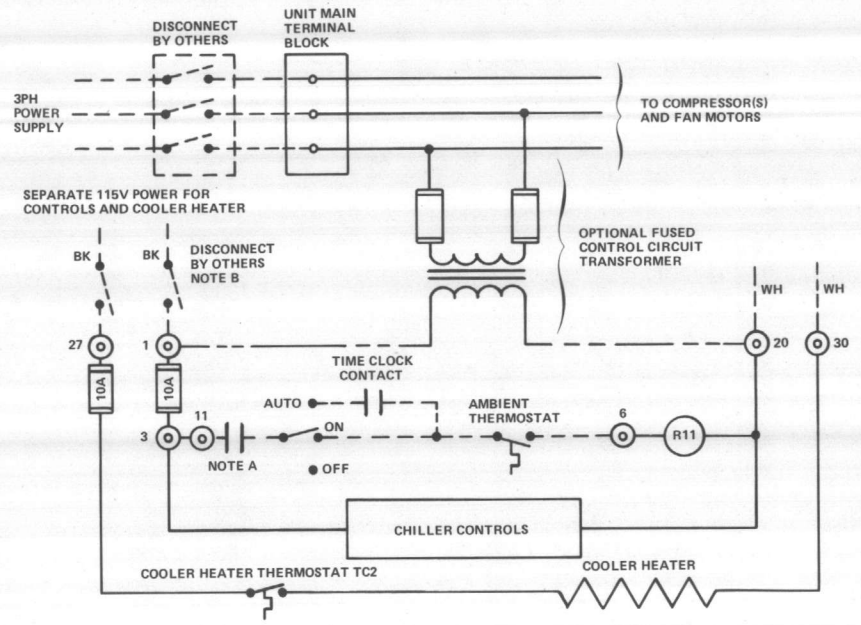

LEGEND:

- FIELD WIRING TERMINAL
- FIELD WIRING
- FACTORY WIRING
- OPTIONAL FACTORY WIRING
- BK BLACK WIRING (LINE)
- WH WHITE WIRING (NEUTRAL)

NOTE A:
Chilled water flow switch.

NOTE B:
Standard is separate power supply circuits for controls and cooler heater. These circuits can be combined by installing jumpers from 1 to 27 and 20 to 30.

ALR-075B, 085B, 105B thru 130B, & 145A

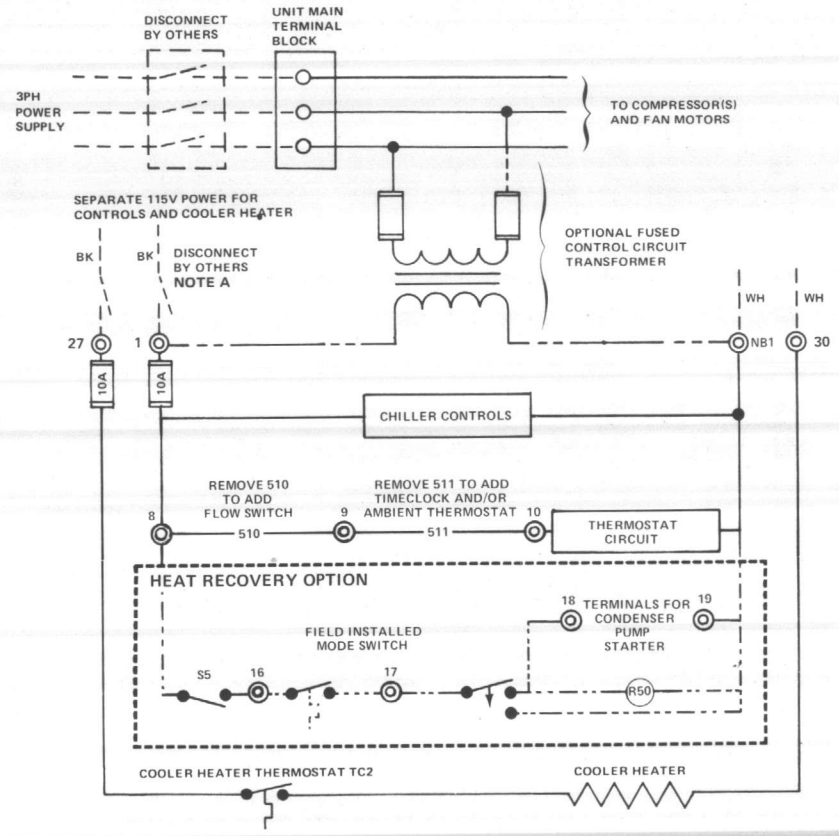

LEGEND:

- FIELD WIRING TERMINAL
- FIELD WIRING
- FACTORY WIRING
- OPTIONAL FACTORY WIRING
- BK BLACK WIRING (LINE)
- WH WHITE WIRING (NEUTRAL)

NOTE A:
Standard is separate power supply circuits for controls and cooler heater. These circuits may be combined by installing jumpers between terminals 27 and 1 and NB1 and 30.

UNIT LAYOUT & PRINCIPLES OF OPERATION

MAJOR COMPONENT LOCATIONS

The figures below illustrate component locations within the unit and compressor and condenser fan motor horsepower values for each unit size.

TOP VIEW OF UNIT

ALR-035A

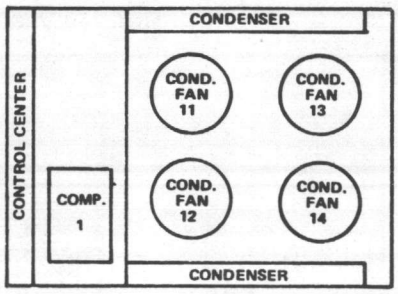

ALR-040A

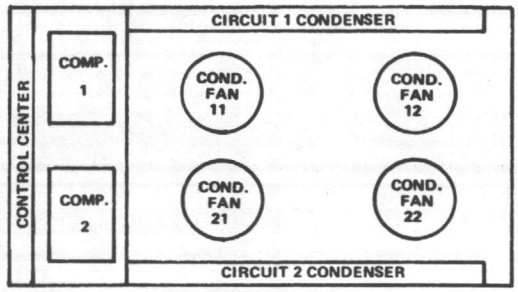

ALR-050A

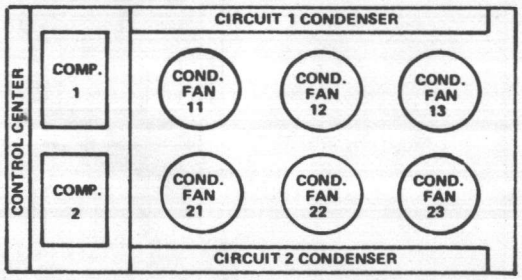

ALR-060B, 065B, 076A, 084A, 094A

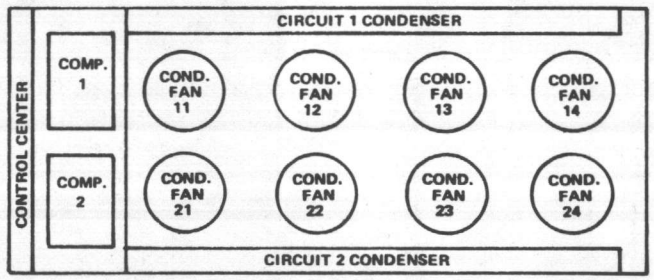

ALR-075B, 085B, 105B thru 130B, & 145A

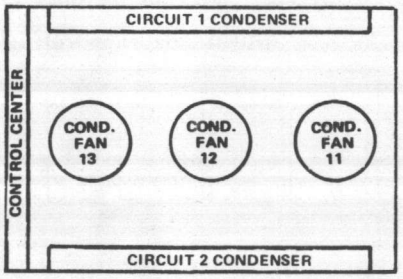

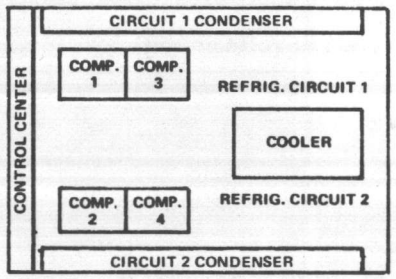

ALR UNIT SIZE	COMPRESSOR HP				FAN HP (EACH)
	1	3	2	4	
035A-D	35	–	–	–	1.5
040A-D	20	–	25	–	1.5
050A-D	30	–	30	–	1.5
060B-D	30	–	35	–	1.5
065B-D	35	–	40	–	1.5
075B-D	35	–	25	25	5.0
076A-D	40*	–	40*	–	1.5
084A-D	50	–	50	–	1.5
085B-D	35	–	35	35	5.0
094A-D	60	–	60	–	1.5
105B-D	25	35	25	35	5.0
110B-D	25	35	35	35	5.0
120B-D	35	35	35	35	5.0
130B-D	40	40	40	40	5.0
145A-D	40*	40*	40*	40*	5.0

*DISCUS compressors.

CONTROL CENTER

All electrical controls are enclosed in a weatherproof control center with keylocked, hinged access doors. The control center is composed of two separate compartments, high voltage and low voltage. All of the high voltage components are located in the compartment on the right side of the unit. The low voltage components are located on the left side with the live terminals located behind a dead front panel. This protects service personnel from live terminals when accessing the adjustable and resettable controls.

FIGURE 10. DISCONNECT MOUNTING ALR-035A thru -065B, 076A, 084A, 094A

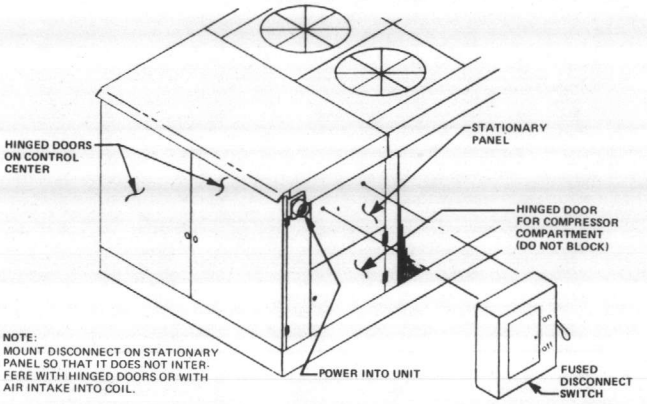

FIGURE 11. CONTROL CENTER LAYOUT ALR-035A

(Left Side, 110 Volt Controls)

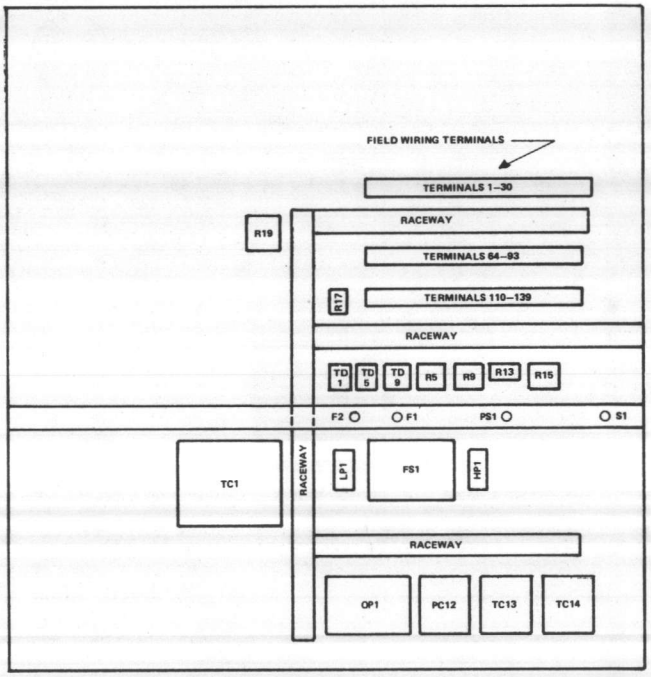

FIGURE 12. CONTROL CENTER LAYOUT ALR-040A thru 065B, 076A, 084A, 094A

(Left Side, 110 Volt Controls)

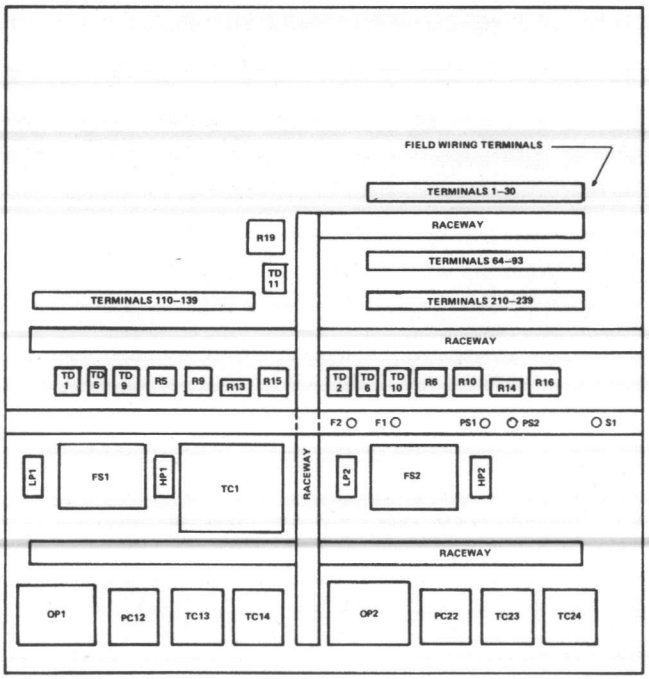

FIGURE 13. CONTROL CENTER LAYOUT ALR-035A thru 065B, 076A, 084A, 094A

(Right Side, High Voltage Power Section)

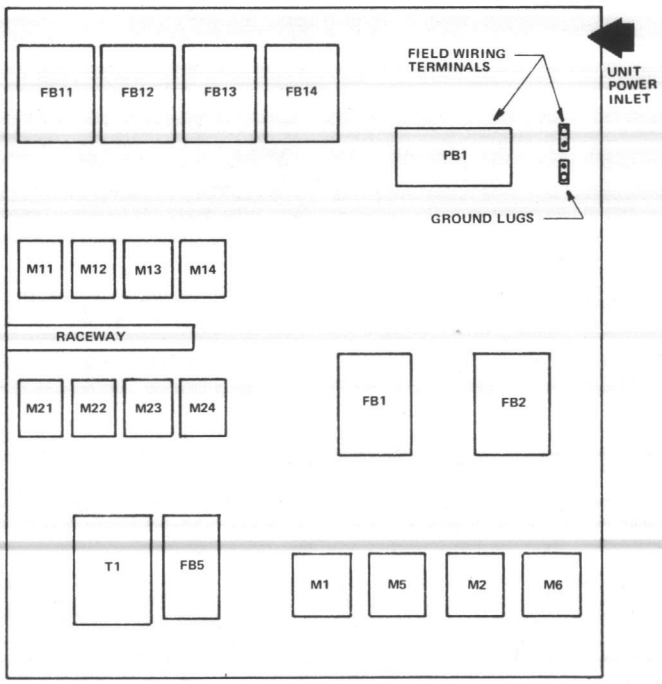

FIGURE 14. UNIT DISCONNECT AND CONTROL CENTER LAYOUT – ALR-075B, 085B, 105B thru 130B, & 145A

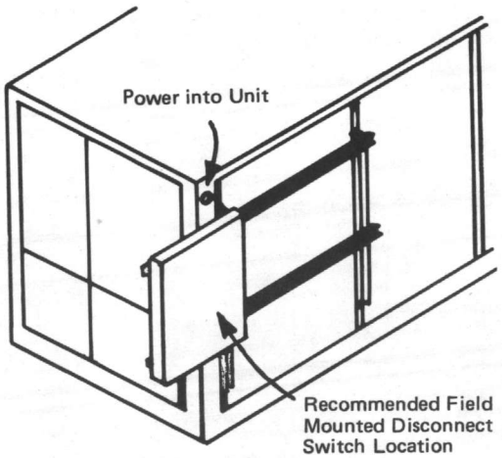

(Left Side, 110 Volt Controls)

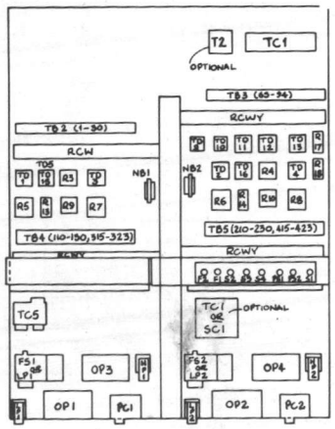

(Right Side, High Voltage Power Section

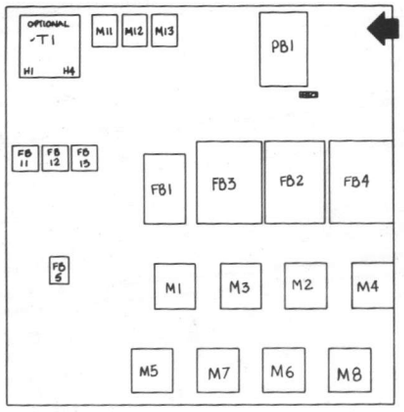

SEQUENCE OF OPERATION

For Models ALR-035A thru 065B, 076A, 084A, 094A

The components for a two-compressor unit, models ALR-040A, -050A, -060B, and -065B, are given in parentheses ().

The following sequence of operation is for ALR SEASONPAK air cooled water chiller operation. With control circuit power on, control stop switch S1 closed, and manual pumpdown switch PS1 (PS2) closed ("auto" position), 115 volt power is applied through control circuit fuse F1 to the compressor crankcase heater HTR1 (HTR2).

When the remote time clock contacts are closed, the manual shutdown switch is on and the flow switch contacts are closed; then relay R11 is energized, closing contacts 4–6 (7–9). If freeze control FS1 (FS2), high pressure control HP1 (HP2), motor protector MP1 (MP2) and oil pressure control OP1 (OP2) do not sense an alarm condition, then the water temperature control thermostat TC1 will be energized. The unit will operate automatically in response to TC1.

On a call for cooling, TC1, stage 1, energizes liquid line solenoid SV1, opening the valve and allowing refrigerant to flow into the evaporator. As refrigerant pressure builds up, low pressure control LP1 closes to energize compressor contactor M1, starting the compressor. Closing LP1 also energizes condenser fan relay M11, closing its contacts and providing power to condenser fan motor 11 and condenser fan motor controls PC12, TC13 and TC14 (TC14 on ALR-035, -060 and -065).

On two-compressor units, if additional stages of cooling are required, temperature control thermostat TC1 energizes liquid line solenoid valve SV2 after time delay relay TD11 has sequenced closed, to initiate the same starting sequence in refrigerant circuit number 2.

On units with compressor unloading, if additional stages of cooling are required, the unloader U1 (U2) is de-energized and the compressor is loaded.

On unit sizes 084A and 094A the first compressor starts unloaded and is then loaded 100% before the second compressor starts.

For Models ALR-075B, 085B, 105B thru 130B, & 145A

The following sequence of operation is typical for ALR SEASONPAK air cooled water chiller operation. It is written for a four-compressor unit. Components referred to in the sequence, but not used in a three-compressor unit are HTR3, MP3, R7, TD12, M3 and M7.

With the control circuit power on, control stop switch S1 closed, and manual pumpdown switches PS1 and PS2 closed ("auto" position), 115 volt power is applied through control circuit fuse F1 to the compressor crankcase heaters HTR1 through HTR4, and if safety contacts FS1, HP1, FS2 and HP2 are closed, then power is supplied to low pressure switches LP1 and LP2.

When the remote time clock contacts close and the chilled water pump starts, closing the flow switch contacts and if all safeties (FS1 and FS2, HP1 and HP2, OP1 through OP4 and MP1 through MP4) are closed, then the safety relays R5, R7, R6 and R8 are energized. Power is then supplied to thermostat TC1 and the unit will operate automatically in response to TC1.

On a demand for cooling, TC1 energizes liquid line solenoid valve SV1, opening the valve and allowing refrigerant to flow into the evaporator. As refrigerant pressure builds up, low pressure control LP1 closes, energizing compressor contactor M1, starting the compressor. LP1 also energizes R9 which in turn provides power to fan motor contactors M11, M12 and M13. A second contact on R9 shunts out TD15, opening up TD15. If LP1 opens, cutting power to R9, then compressors 1 and 3 cannot be started until TD15 times out and energizes safety relays R5 and R7. This provides anti-short cycling protection.

NOTE: *The new motor protectors have a 2-minute time delay. When power is interrupted to terminals 3 and 4 of any motor protector, the MP contacts across terminals 1 and 2 will not close for two minutes.*

If additional steps of cooling are required, temperature control thermostat TC1 energizes liquid line solenoid valve SV2 after time delay relay TD11 has sequenced closed, to initiate the same starting sequence in refrigerant circuit number 2.

If additional cooling is still required, the 3rd and 4th stages of TC1 energize the 3rd and 4th compressors, after time delay relays TD12 and TD13 have sequenced closed.

For units with heat recovery condensers, on a call for heat, the condenser mode switch closes, energizing relay R50, shutting off the condenser fans and switching solenoid valves SV10, SV11, SV20 and SV21 in the refrigerant lines to route refrigerant to the heat recovery condensers. Upon satisfying the heating demand, the condenser mode switch opens, de-energizing relay R50, starting the condenser fans and switching the solenoid valves to route refrigerant to the air-cooled condensers. To avoid short cycling, time delay TD50 will prevent the switchover to heat recovery for 5 minutes.

PUMPDOWN CYCLE

As temperature control thermostat TC1 is satisfied, it opens its contacts, de-energizing liquid line solenoid valve SV1, causing the valve to close. When the compressor has pumped most of the refrigerant from the evaporator to the condenser, the low pressure control LP1 opens, shutting down the compressor and condenser fan motors.

In the event a closed solenoid valve allows refrigerant to leak to the low side of the refrigerant circuit during either unit "on" or "off" time, the buildup in pressure will close the low pressure control, energizing the low pressure relay and starting the compressor for pumpdown.

REFRIGERANT PIPING SCHEMATIC

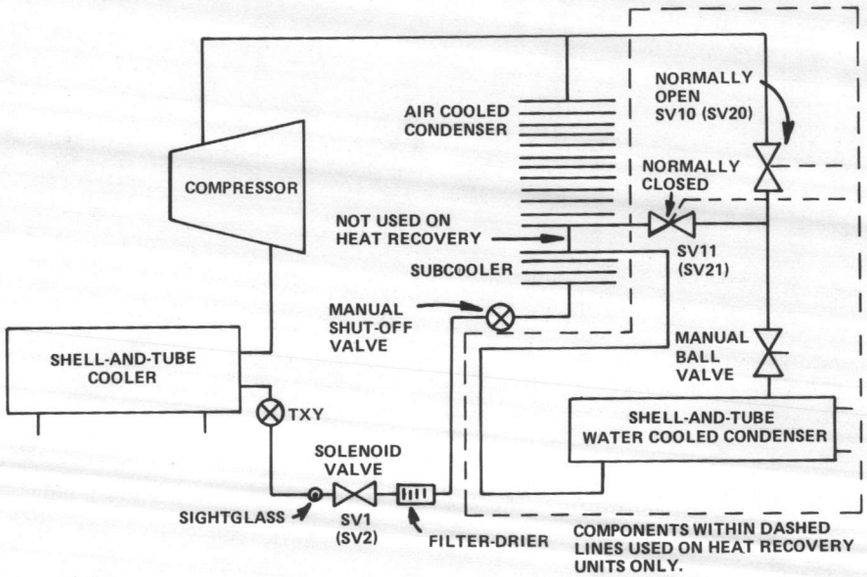

ELECTRICAL LEGEND

AB	Alarm Bell
C11–21	Capacitor For Fan Motors
Compr. 1–4	Compressor No. 1–4
F1	Fuse, Control Circuit
F2	Fuse, Cooler Heater
FB1–4	Fuse Block, Compressor Motors
FB5	Fuse Block, Control Power
FB11–14	Fuse Block, Condenser Fan Motors
FS1, 2	Freezestat Control
GRD	Ground
HP1, 2	High Pressure Control
HTR 1–4	Compressor Crankcase Heater
HTR5	Cooler Heater
JB1–3	Junction Box for Condenser Fan Motors
JB4	Junction Box for SPEEDTROL Transformer
JB5	Junction Box for Cooler Heater
LP1,2	Low Pressure Controls
M1–9	Contactors, Compressor
M11–24	Contactors, Condenser Fans
MJ	Mechanical Jumper
MP1–4	Compressor Motor Protector
MTR11–24	Condenser Fan Motors
NB1, 2	Neutral Blcoks
OP1–4	Oil Pressure Controls
PB1	Power Block
PC1, 2, 12, 22	Pressure Controls, FANTROL
PC3, 4, 5, 6	Specials, Pressure Controls
PC7–10	Pressure Controls, Unloaders
PS1, 2	Pumpdown Switch
R3, 4	Starter Relays (Compr. 3 & 4)
R5–8	Safety Relays
R5A–8A	Alarm Relays
R9, 10	Low Pressure and Fan Relays
R11	Flow Switch Relay
R13, 14	Low Ambient Relays
R15, 16	Compressor Lockout Relays
R17, 18	Capacity Control Relays
R20,21,22,23, 24,25	Special Relays
S1	Control Stop Switch
S2–4	Lead-Lag Switches
S5	Heat Recovery Switch (1)
SC1	Signal Center
SC11, 21	Fan SPEEDTROL Controls
SV1, 2	Solenoid Valves, Liquid Line
SV5, 6	Solenoid Valves, Hot Gas Bypass
SV10, 20	Solenoid Valves, Water Condenser (1)
SV11, 21	Solenoid Valves, Air Condenser (1)
T1	Main Control Transformer
T2	24V Control Transformer
T3	Fan SPEEDTROL Transformer
T4	Alarm Bell Transformer
TB2–5	Terminal Block, Control
TC1	Unit Thermostat
TC2	Cooler Thermostat
TC3	Return Water Sensor
TC5, 13–24	FANTROL Thermostat
TC10	Special Thermostat
TC11	High Water Unloading
TC12	Special Thermostat
TD1–4	Time Delay, Compressor Part Winding
TD5–8	Time Delay, Compressor Lockout
TD9, 10	Time Delay, Low Ambient
TD11, 12, 13	Time Delay, Compressor Cycling
TD14	Time Delay, Alarm Bell
TD15, 16	Time Delay, Compressor Starting
TD17, 18, 19	Time Delay, Heat Recovery (1)
TD20, 21, 22	Special Time Delay Relays
U1, 2	Compressor, Unloaders

GENERAL NOTES

- Field Wiring
- Factory Wired Terminal
- —200— Wire Number
- Option Block
- Remote Panel Terminal
- Field Wiring Terminal
- Wire Connector
- Plug-in Connector
- * Optional wires on Terminal Block
- (1) For use on Heat Recovery Units Only

POWER SCHEMATIC
COMPRESSOR AND CONDENSER FAN MOTORS (WITHOUT SPEEDTROL)
ALR-035A-S

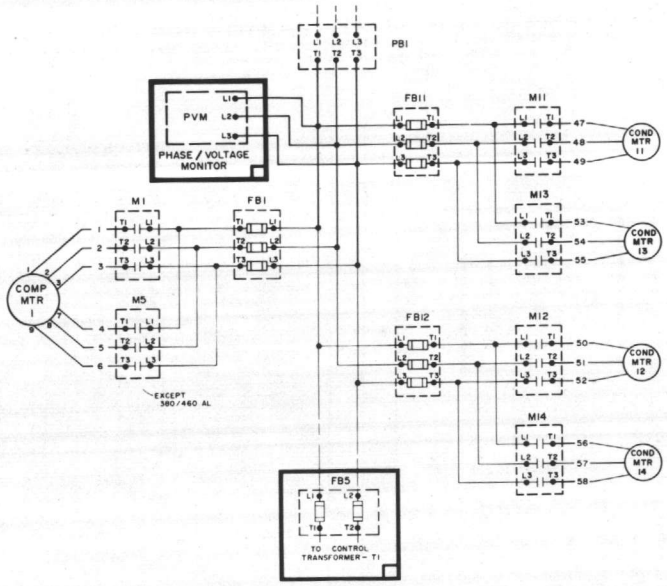

POWER SCHEMATIC
COMPRESSOR AND CONDENSER FAN MOTORS (WITH SPEEDTROL)
ALR-035A-S

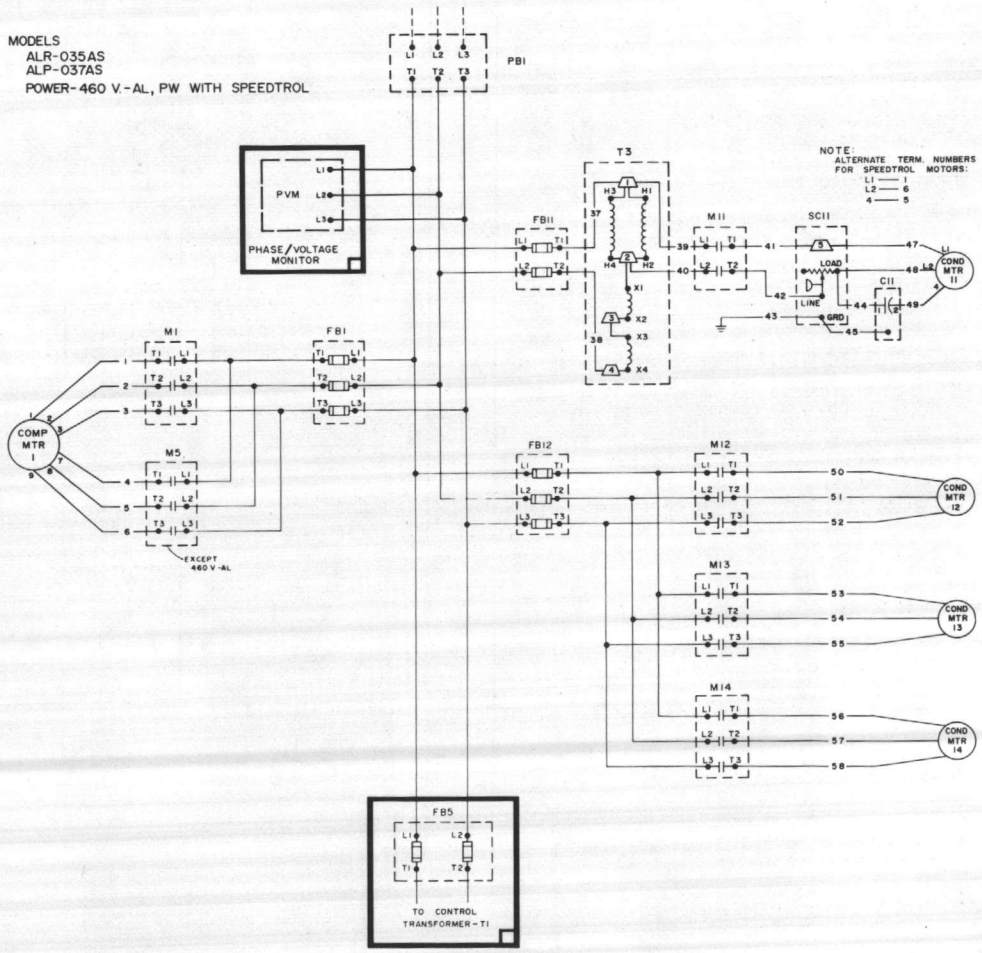

POWER SCHEMATIC
COMPRESSOR AND CONDENSER FAN MOTORS (WITH SPEEDTROL)
ALR-040A-D, 050A-D, 060B-D, 065B-D, 076A-D, 084A-D, 094A-D

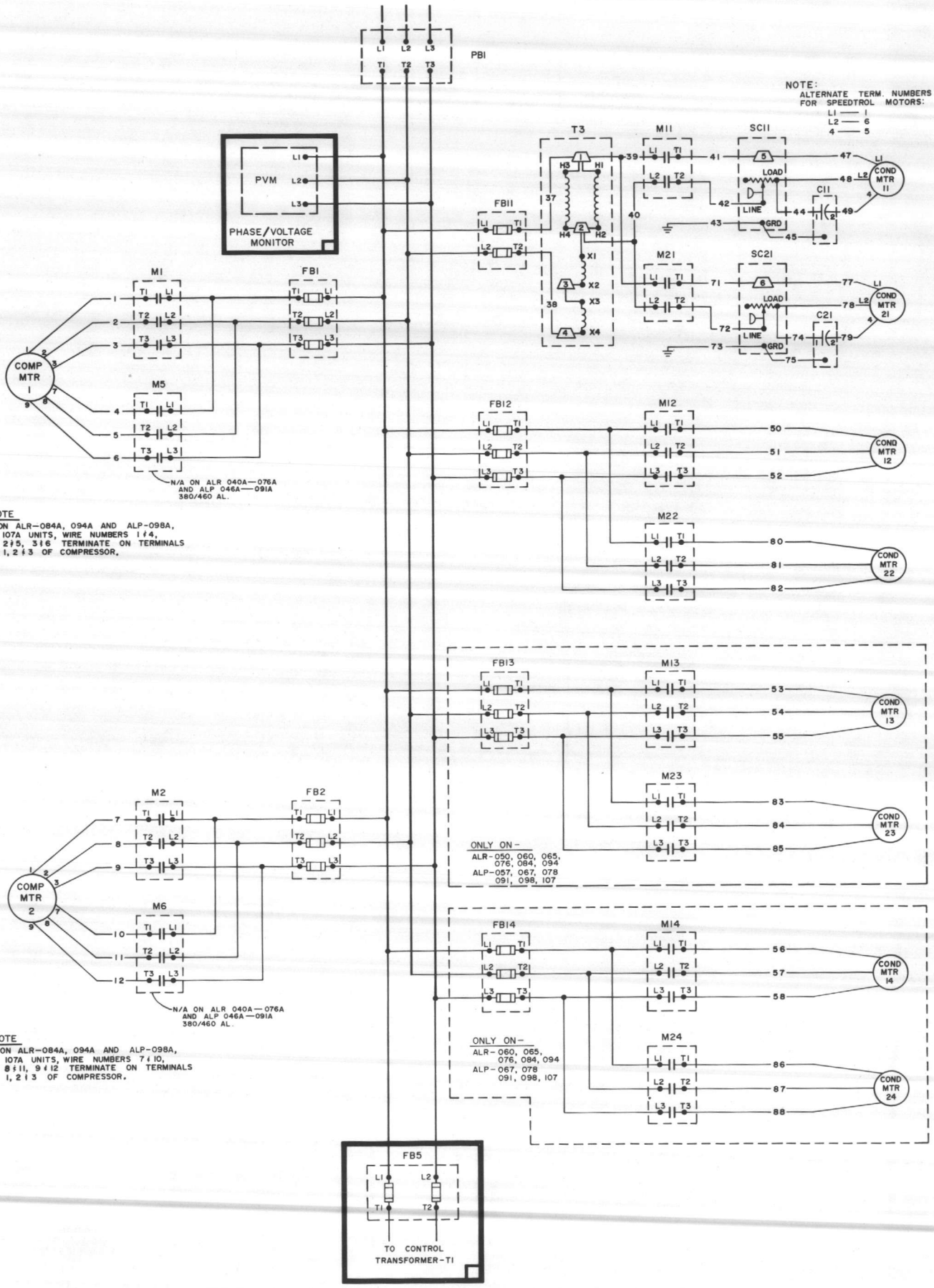

POWER SCHEMATIC
COMPRESSOR AND CONDENSER FAN MOTORS
(WITHOUT SPEEDTROL)
ALR-040A-D, 050A-D, 060B-D, 065B-D, 076A-D, 084A-D, 094A-D

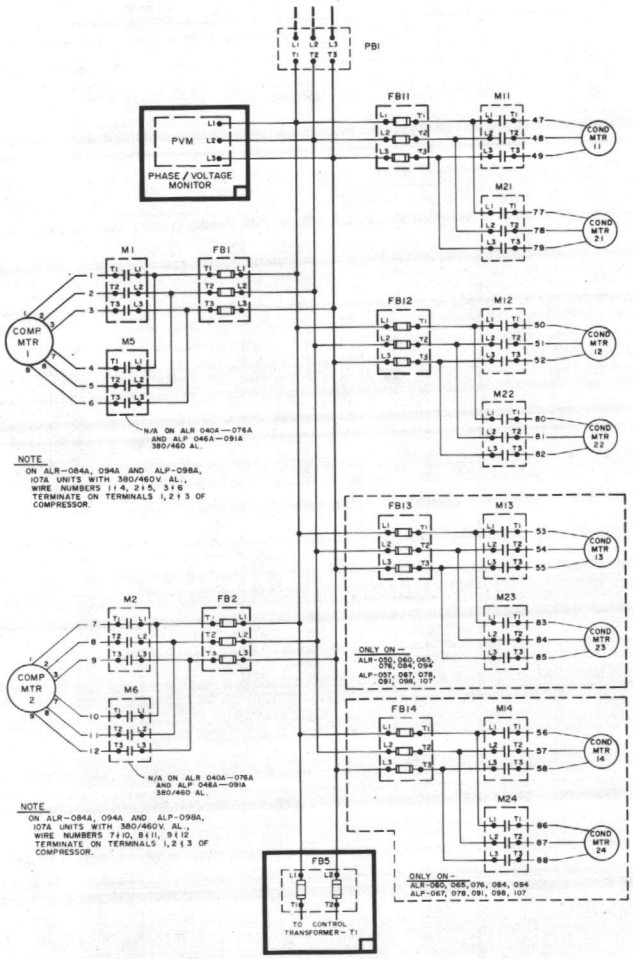

POWER SCHEMATIC
COMPRESSOR AND CONDENSER FAN MOTORS
ALR-075B THRU 130B

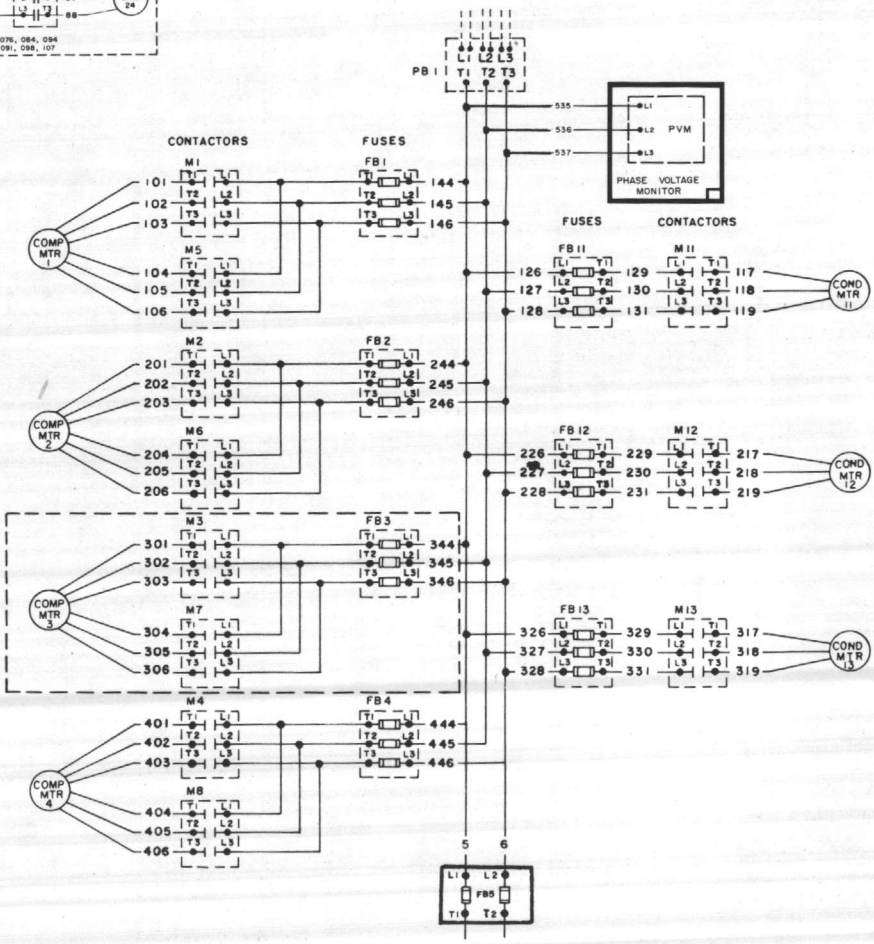

COMPRESSOR CONTROL SCHEMATIC
ALR-035A-S
LABEL 377753E REV. B

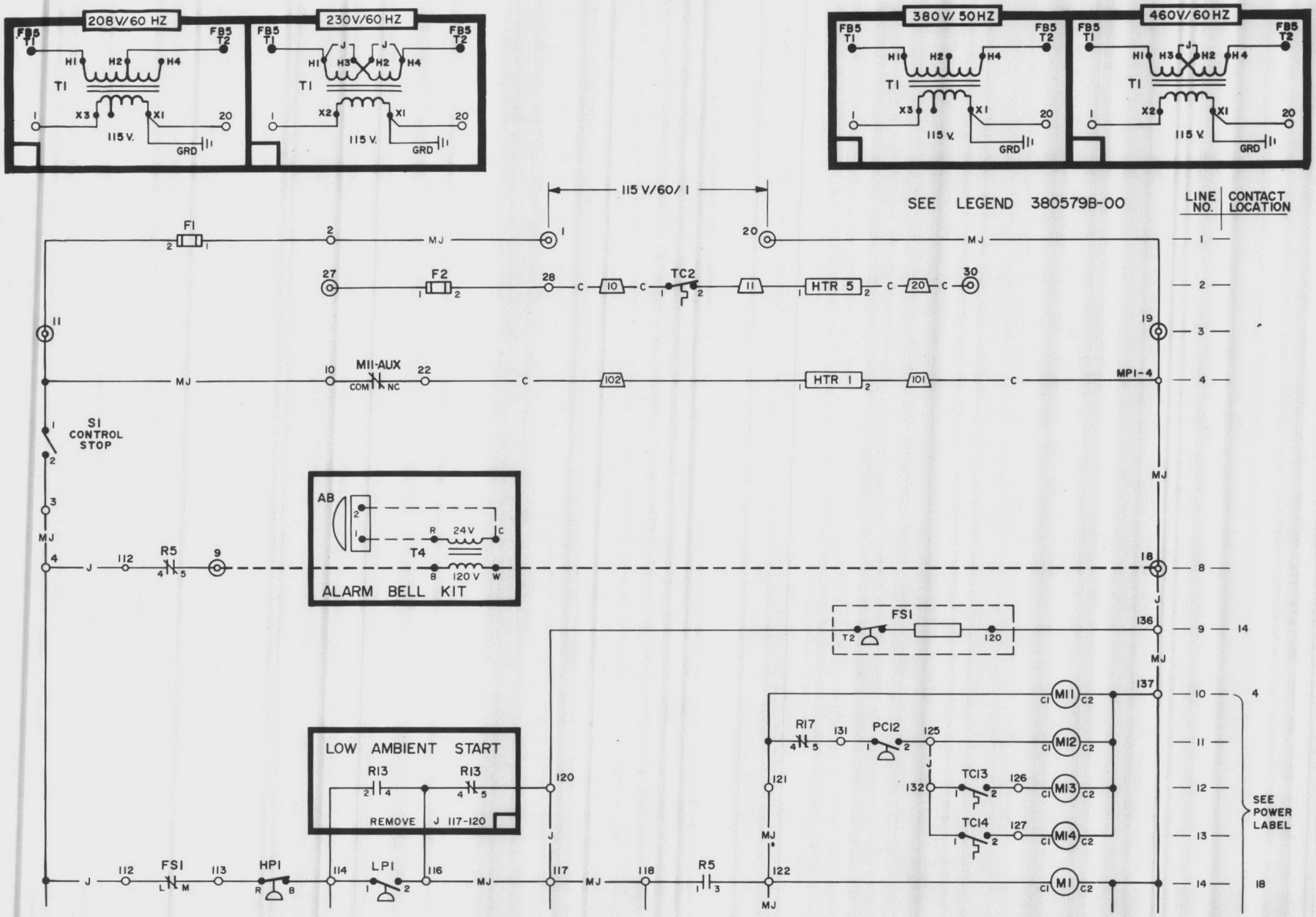

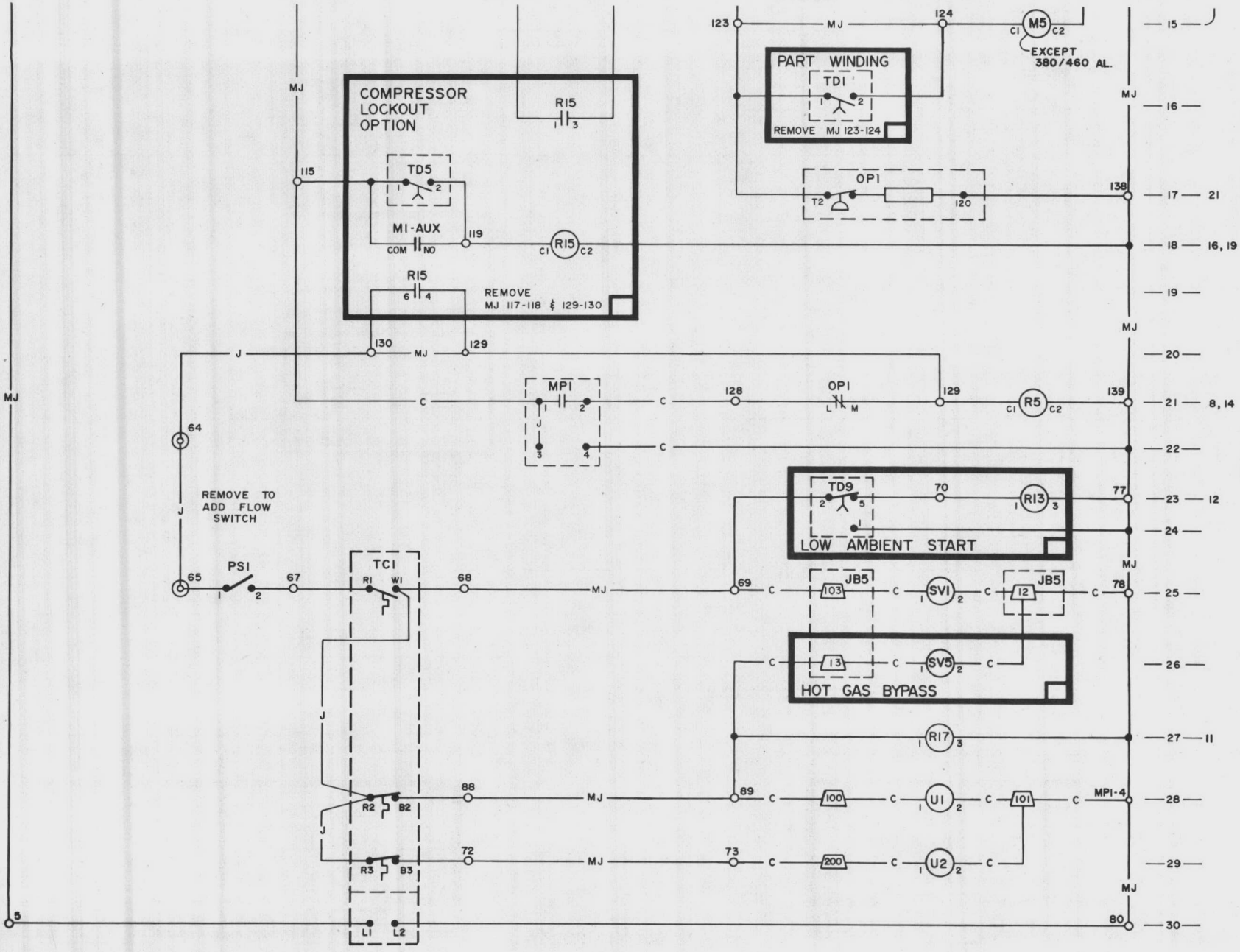
COMPRESSOR LOCKOUT OPTION
R15
TD5
MI-AUX
COM NO
R15
REMOVE MJ 117-118 & 129-130
PART WINDING
TD1
REMOVE MJ 123-124
M5
EXCEPT 380/460 AL.
OP1
MP1
OP1
R5
REMOVE TO ADD FLOW SWITCH
PSI
TC1
TD9
R13
LOW AMBIENT START
JB5
SV1
JB5
SV5
HOT GAS BYPASS
R17
R2
B2
R3
B3
U1
U2
L1
L2
MJ
J
C

COMPRESSOR CONTROL SCHEMATIC
ALR-040A-D
LABEL 377754E REV. B

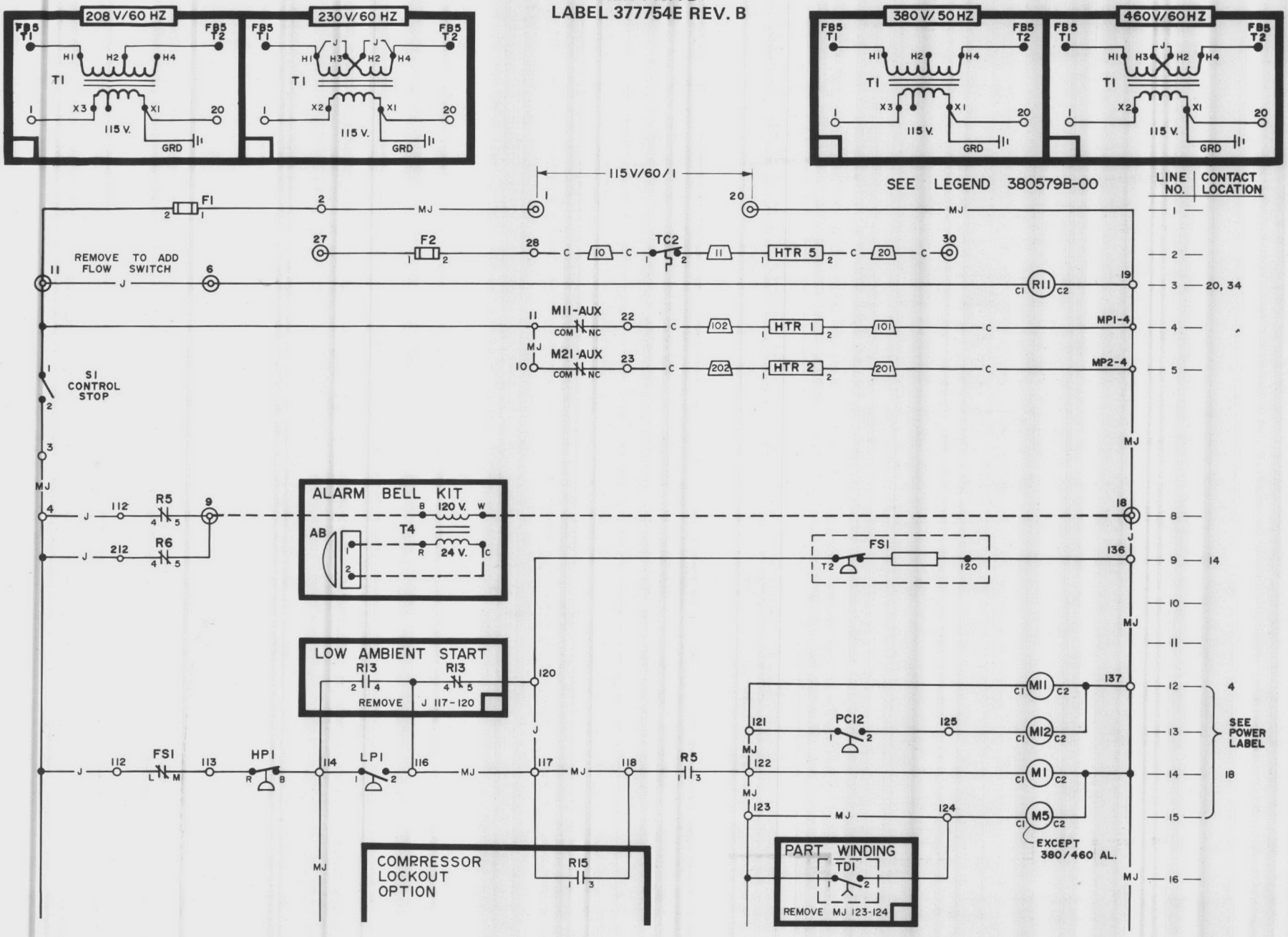

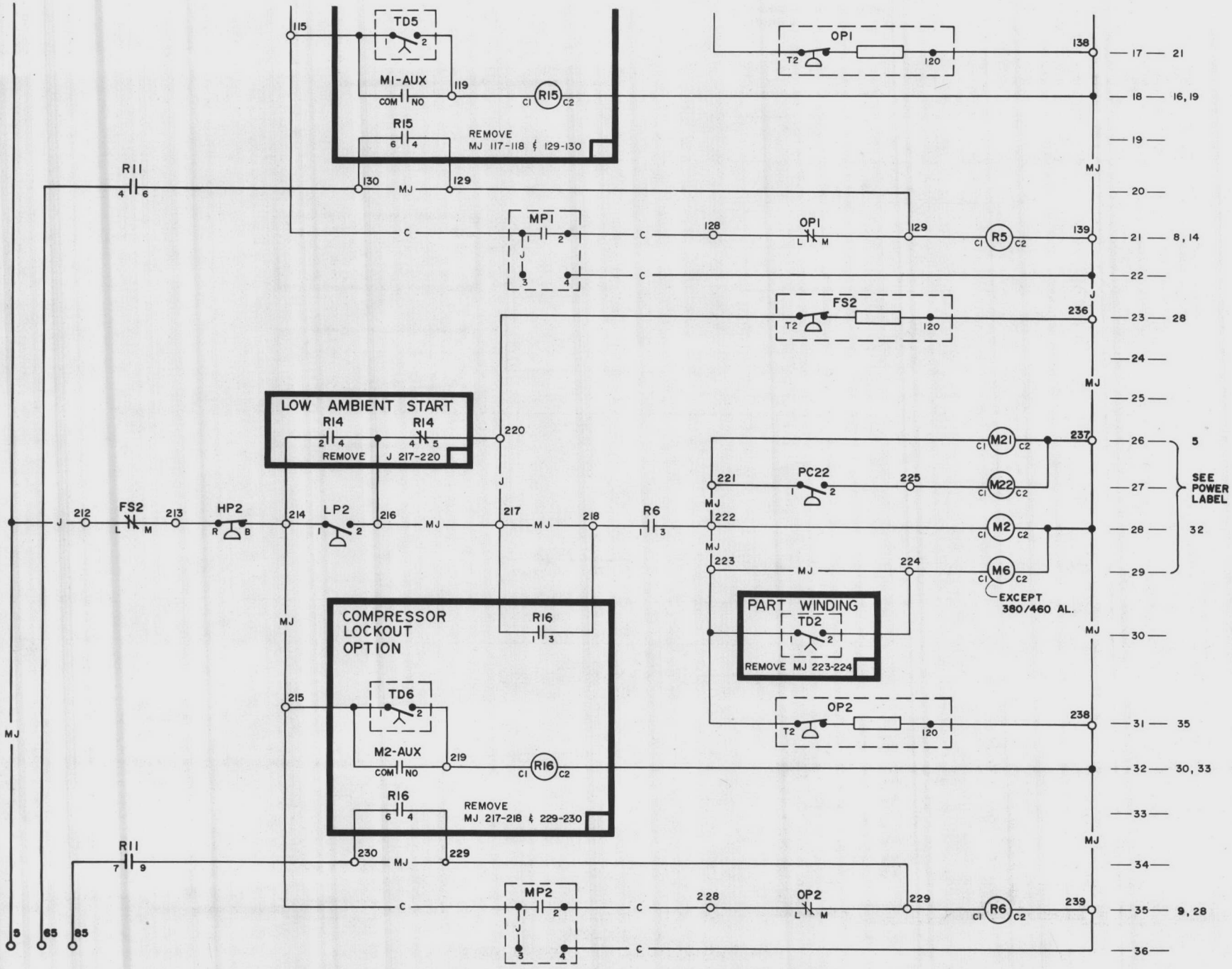

SEE PAGE 26 FOR THERMOSTAT CIRCUIT SCHEMATIC

COMPRESSOR CONTROL SCHEMATIC
ALR-050A-D
LABEL 377755E REV. B

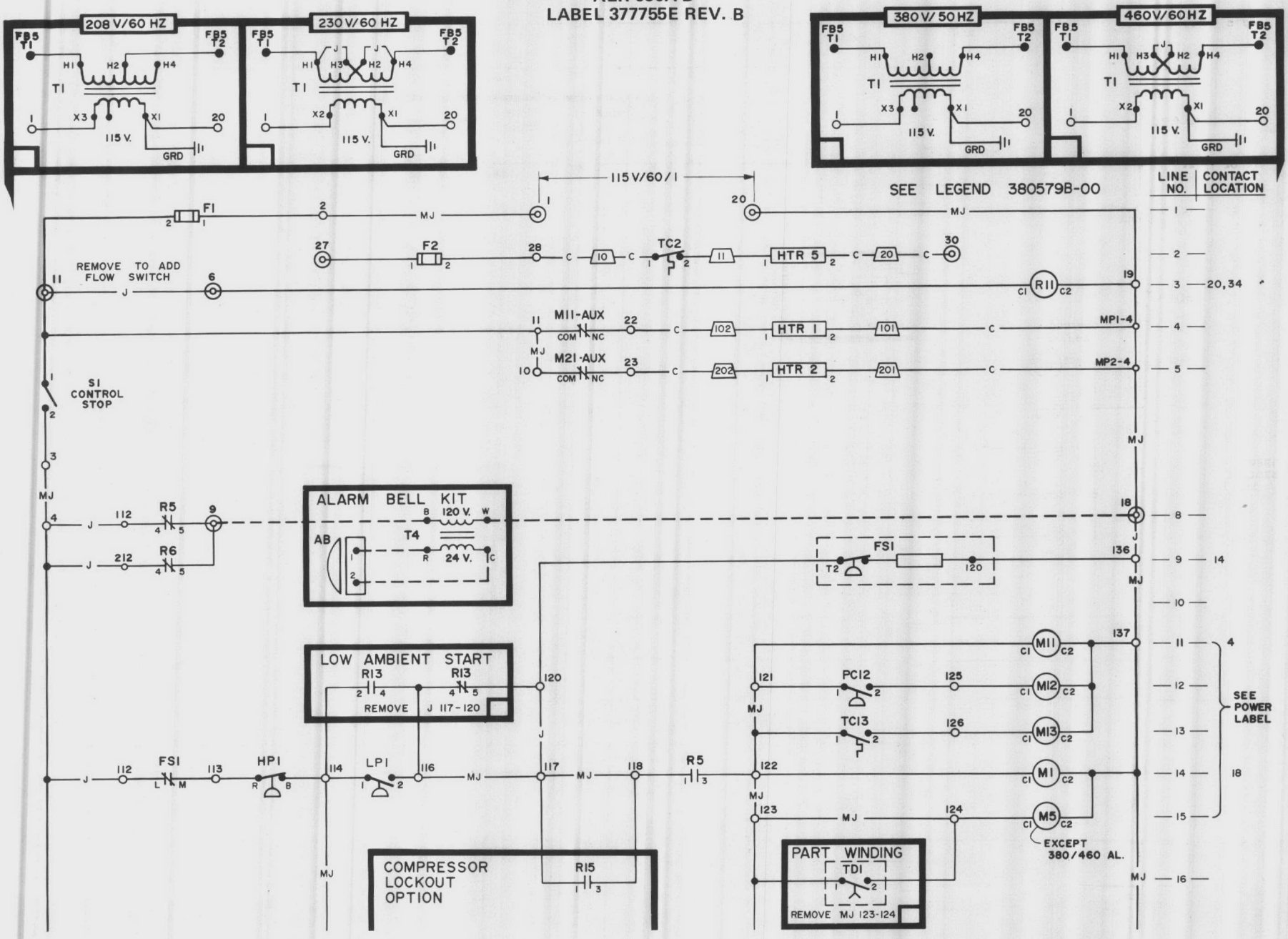

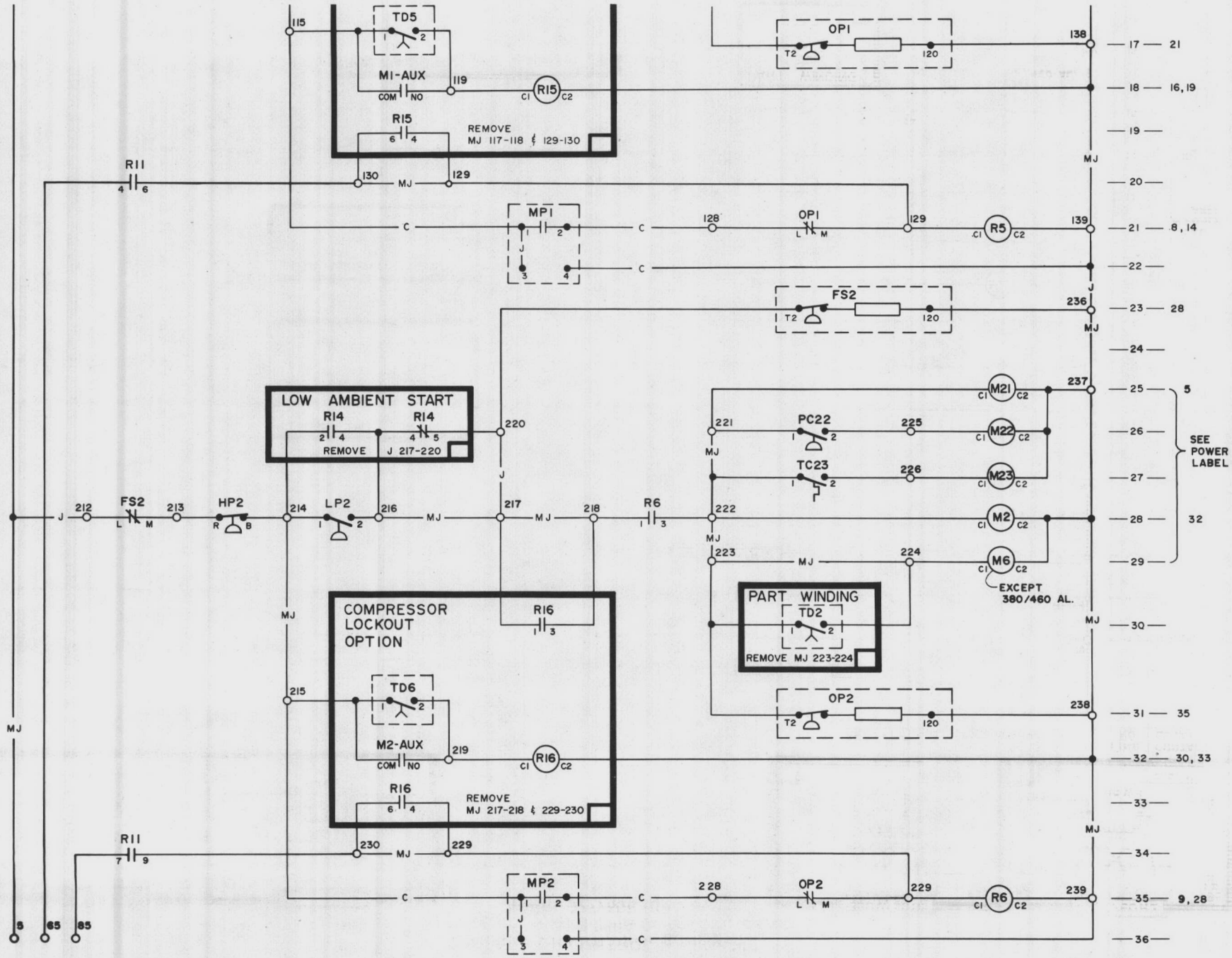

SEE PAGE 26 FOR THERMOSTAT CIRCUIT SCHEMATIC

COMPRESSOR CONTROL SCHEMATIC
ALR-060B-D, 065B-D, 076A-D, 084A-D, 094A-D
LABEL 377756E REV. D

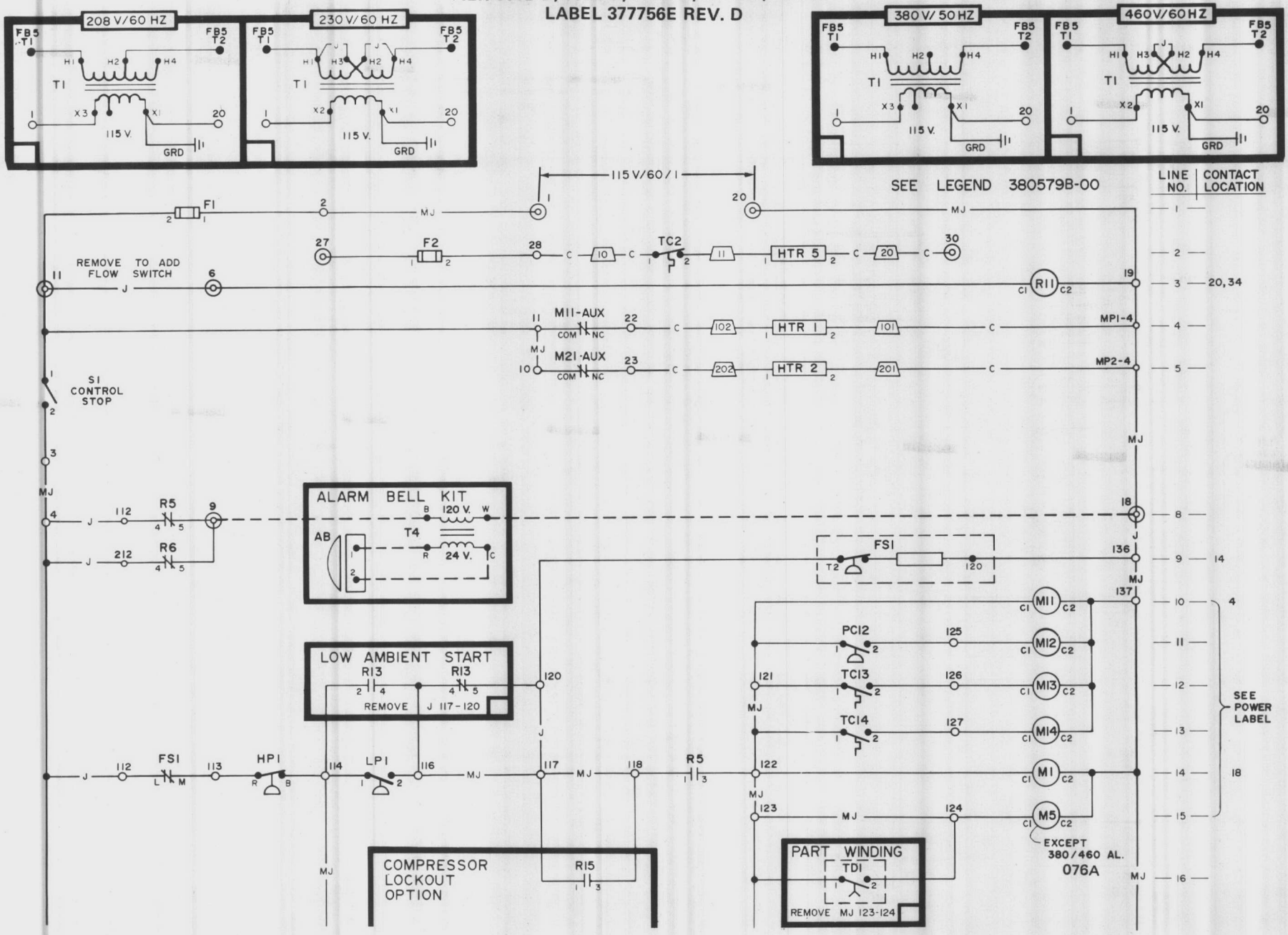

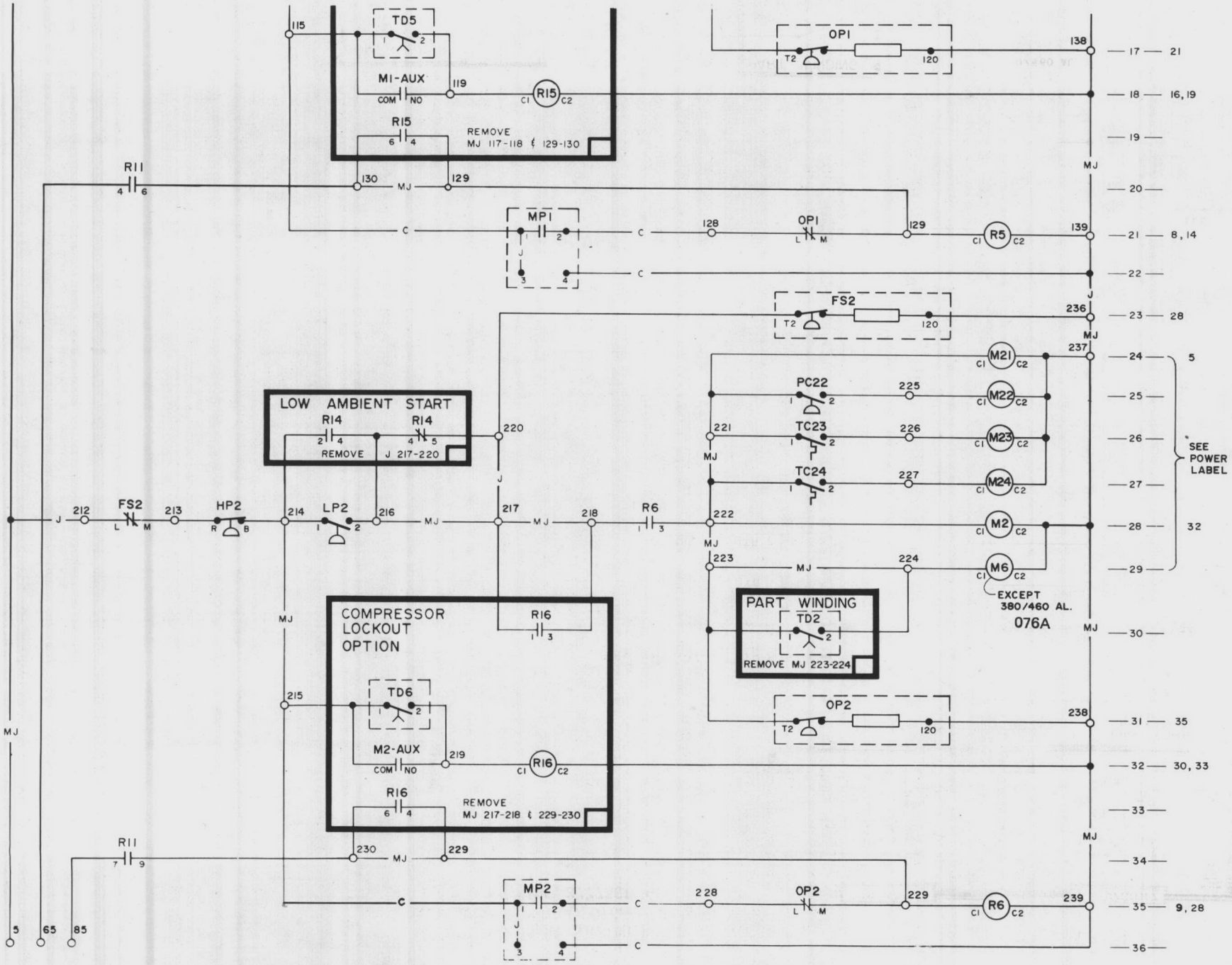

SEE PAGE 26 FOR THERMOSTAT CIRCUIT SCHEMATIC

THERMOSTAT CIRCUIT SCHEMATIC – ALR-040A-D, 050A-D, 060B-D, 065B-D
(No Unloading, With Lead Lag)
LABEL 377761D REV. O

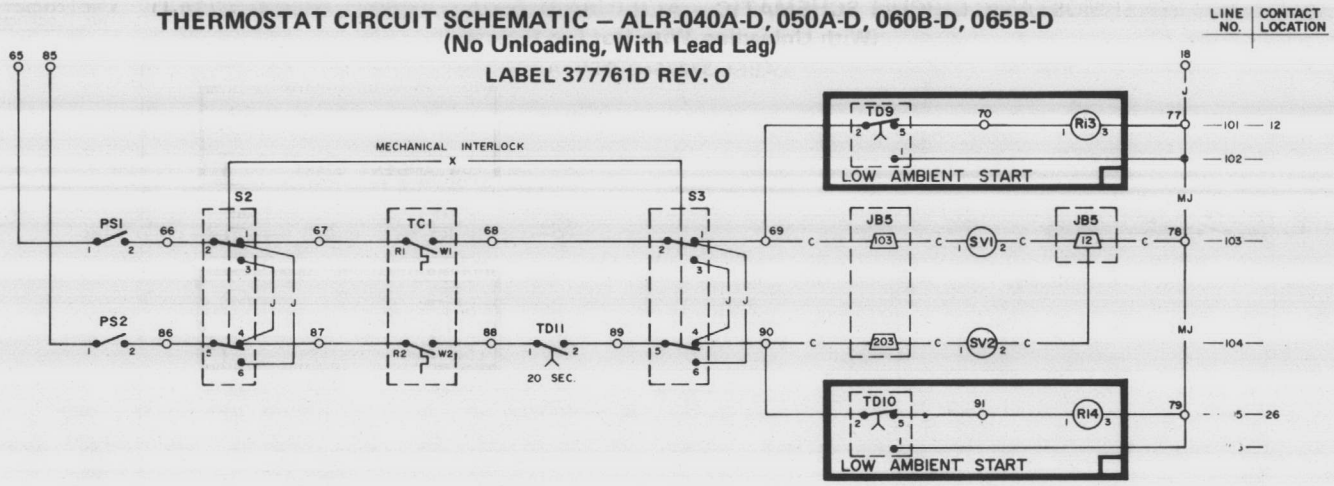

THERMOSTAT CIRCUIT SCHEMATIC – ALR-040A-D, 050A-D, 060B-D, 065B-D
(No Unloading, With Hot Gas Bypass)
LABEL 377763D REV. O

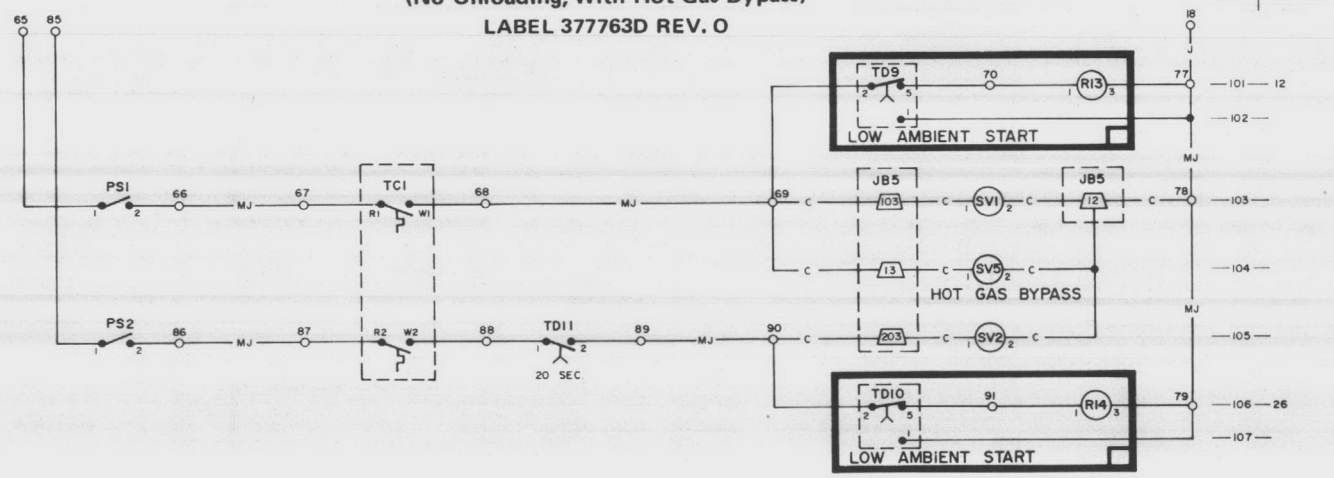

THERMOSTATIC CIRCUIT SCHEMATIC – ALR-040A-D, 050A-D, 060B-D, 065B-D, 076A-D
(With Unloading, With Lead Lag)
LABEL 377762D REV. A

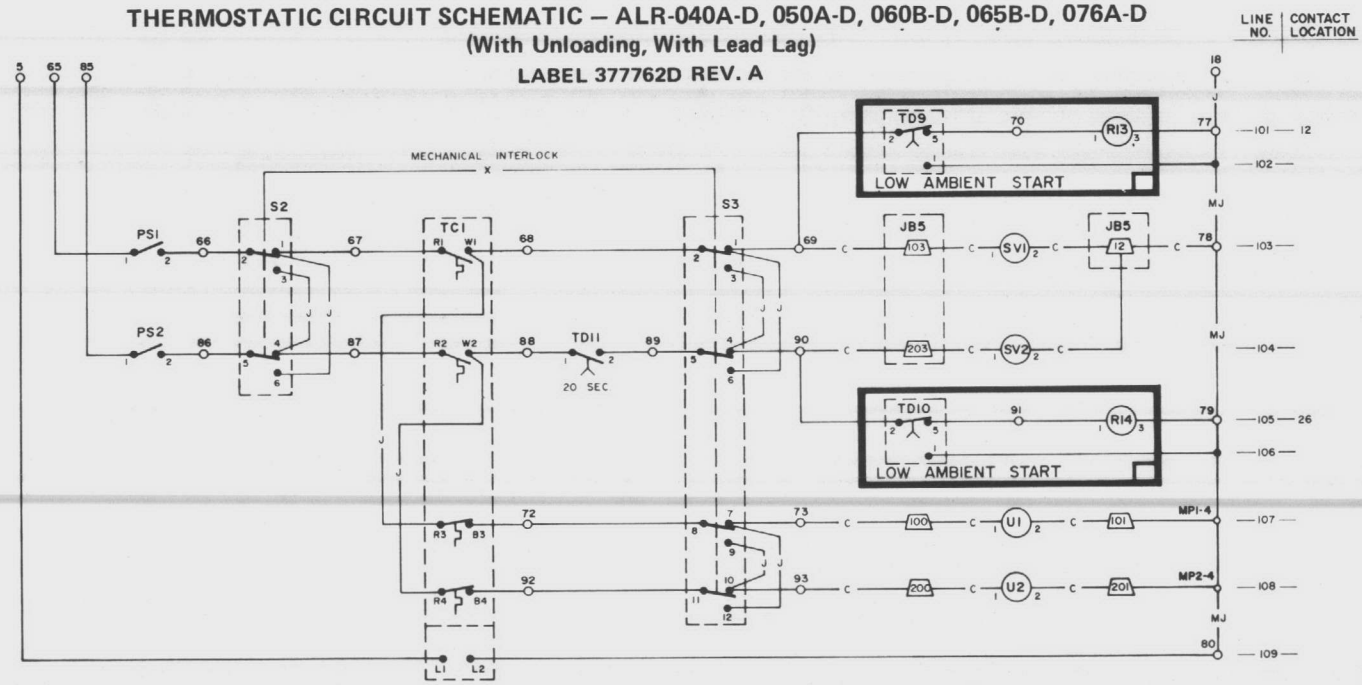

THERMOSTATIC CIRCUIT SCHEMATIC – ALR-040A-D, 050A-D, 060B-D, 065B-D, 076A-D
(With Unloading, With Hot Gas Bypass)

LABEL 377764D REV. A

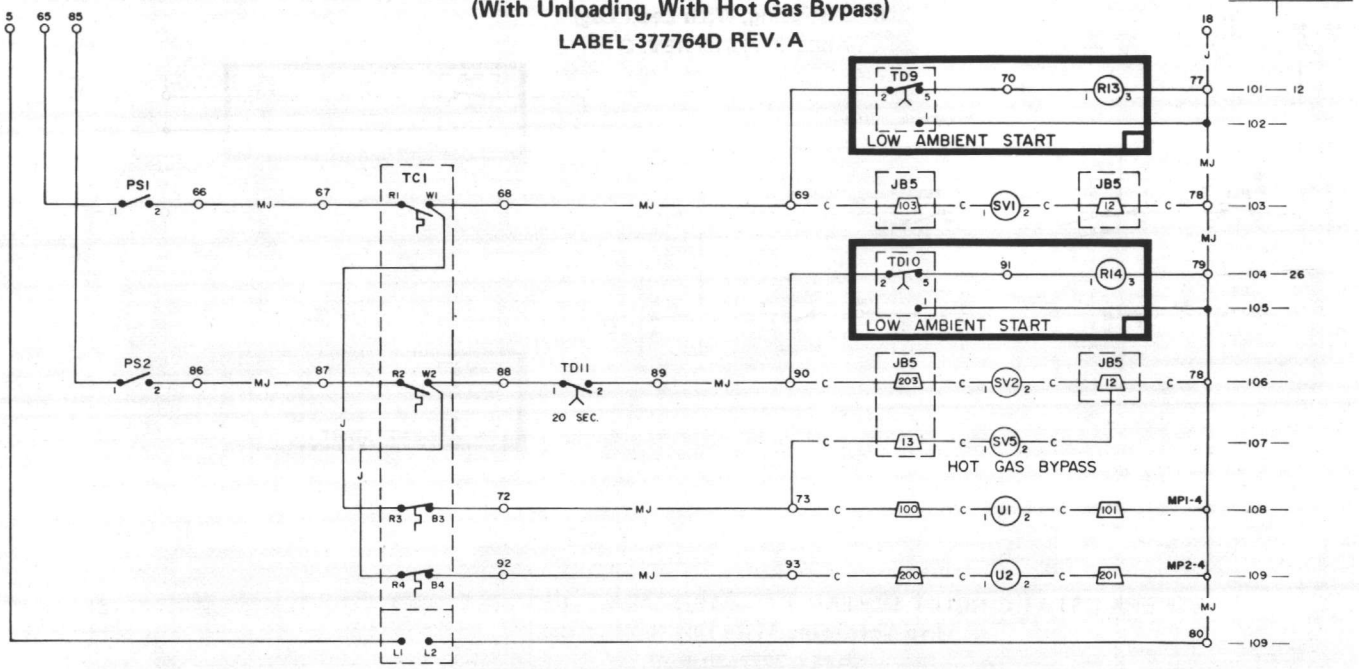

THERMOSTAT CONTROL SCHEMATIC – ALR-084A-D thru 094A-D
(With Lead Lag)

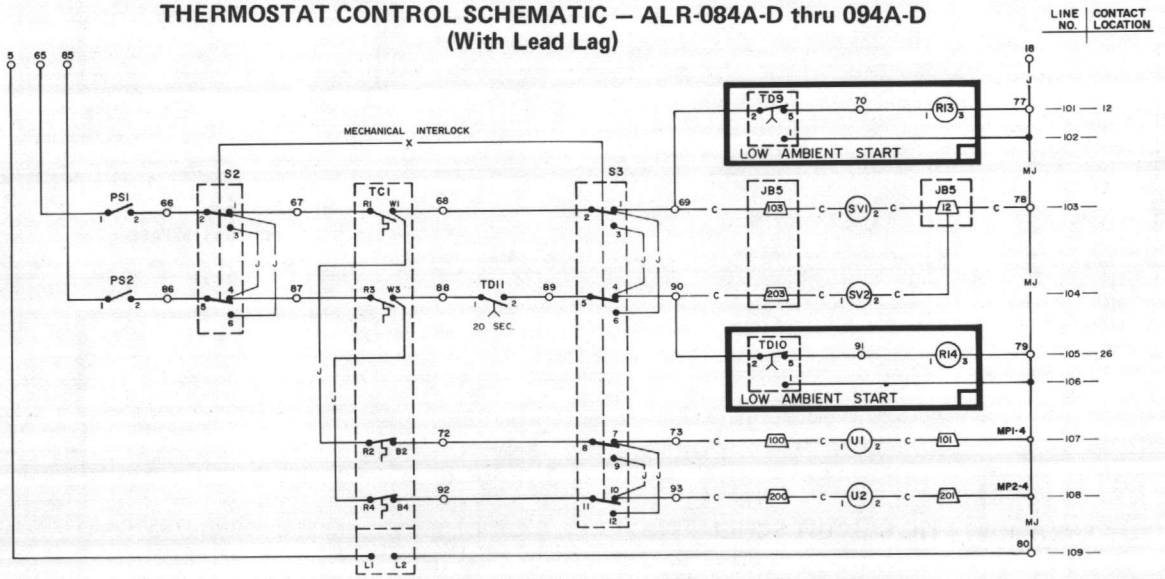

THERMOSTAT CONTROL SCHEMATIC – ALR-084A-D thru 094A-D
(No Lead Lag, With Hot Gas Bypass)

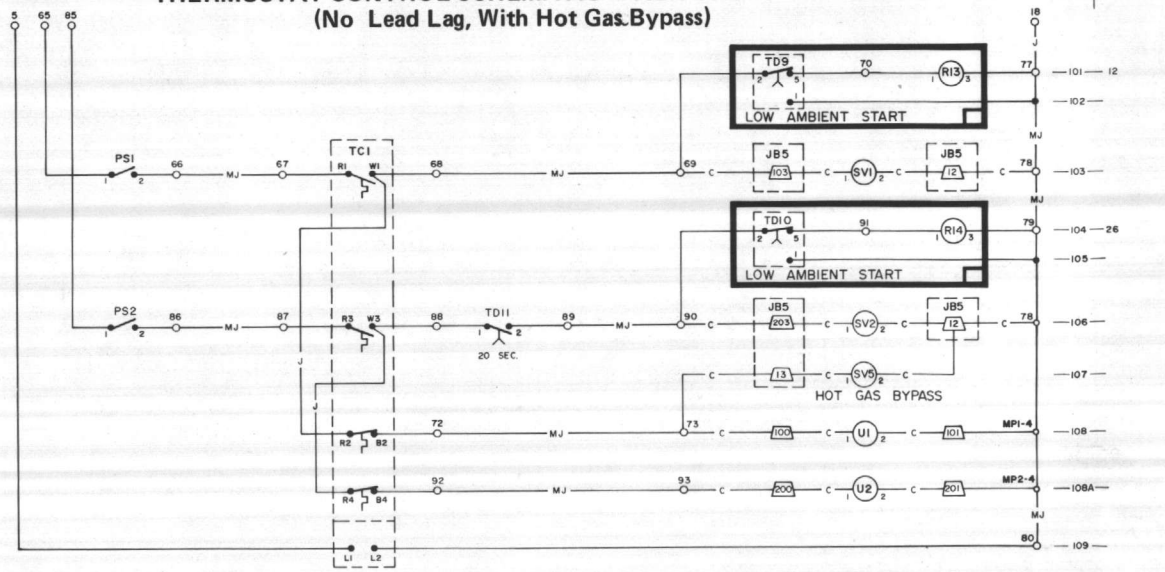

COMPRESSOR CONTROL SCHEMATIC
ALR-075B-D, 085B-D
LABEL 416554E REV. B

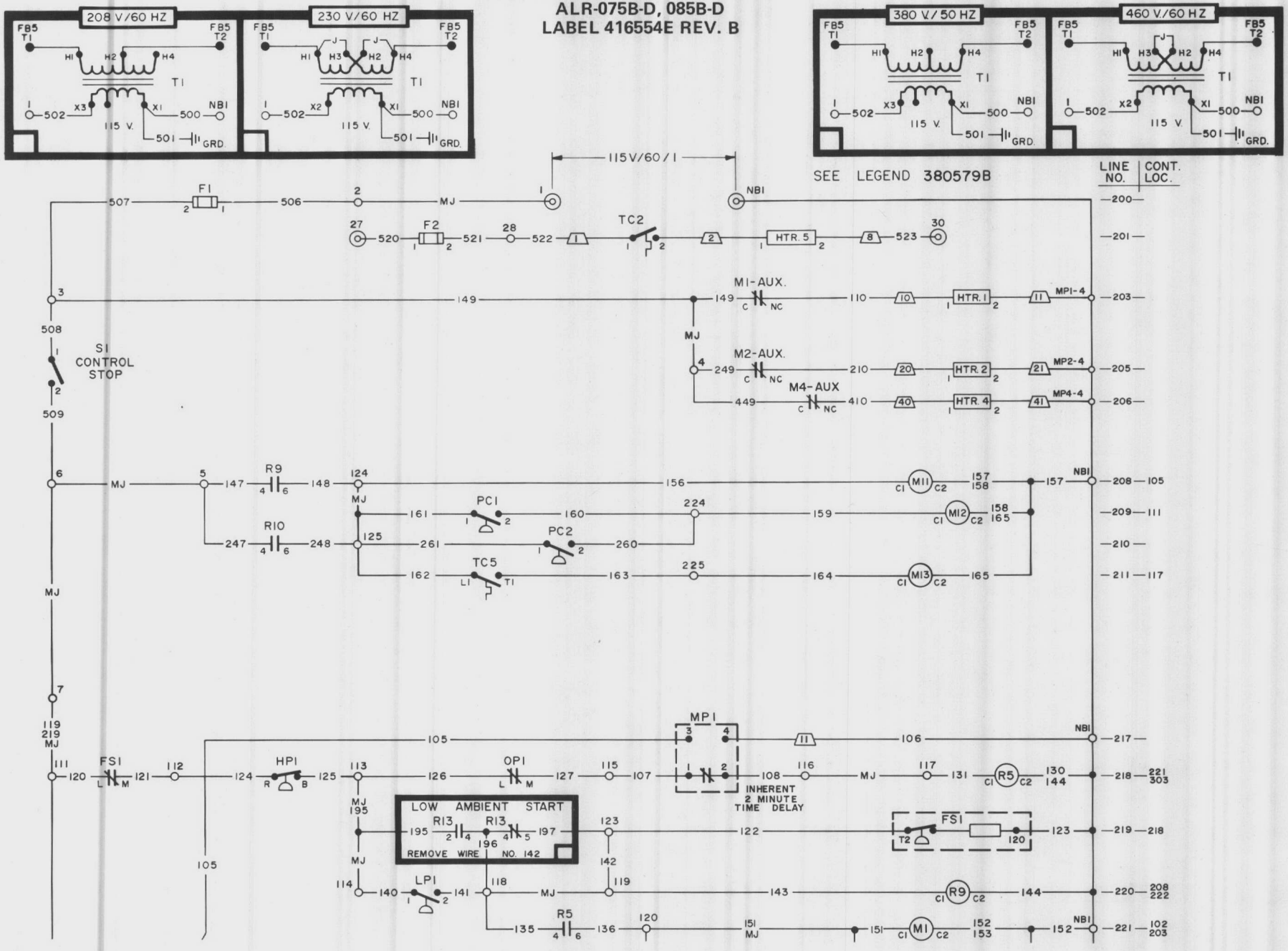

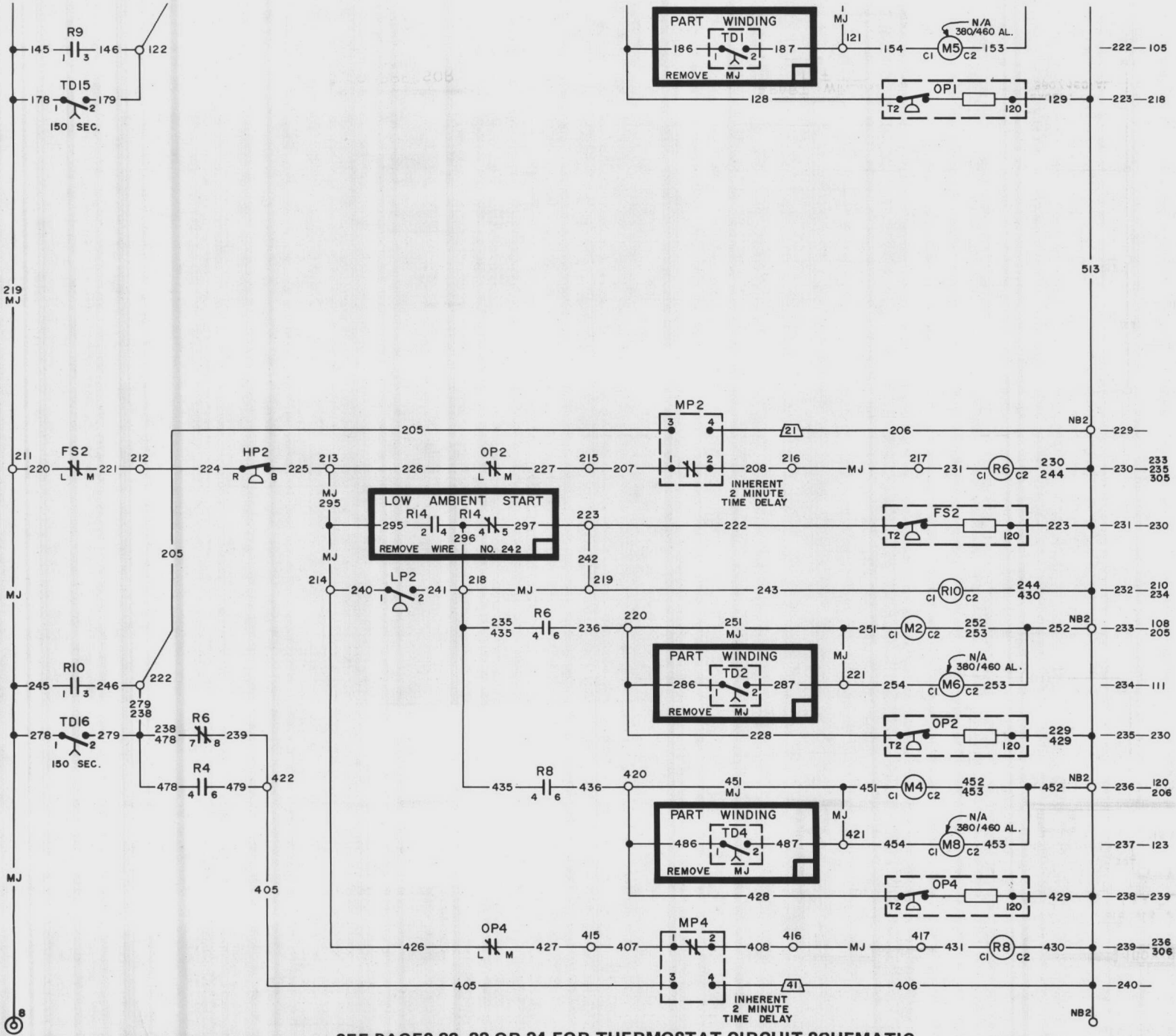

SEE PAGES 32, 33 OR 34 FOR THERMOSTAT CIRCUIT SCHEMATIC.

COMPRESSOR CONTROL SCHEMATIC
ALR-075B THRU 130B & 145A
LABEL 416555E REV. B

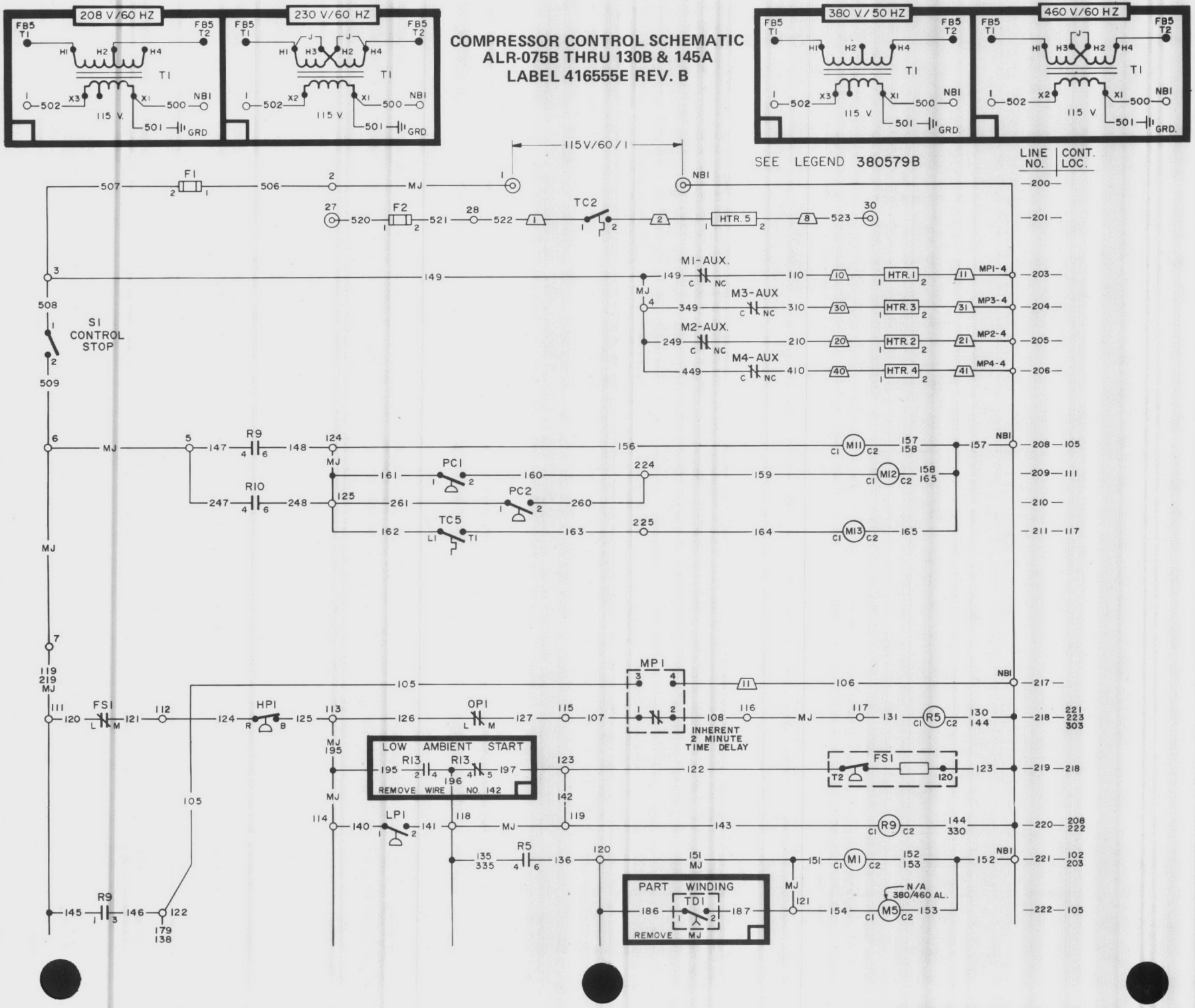

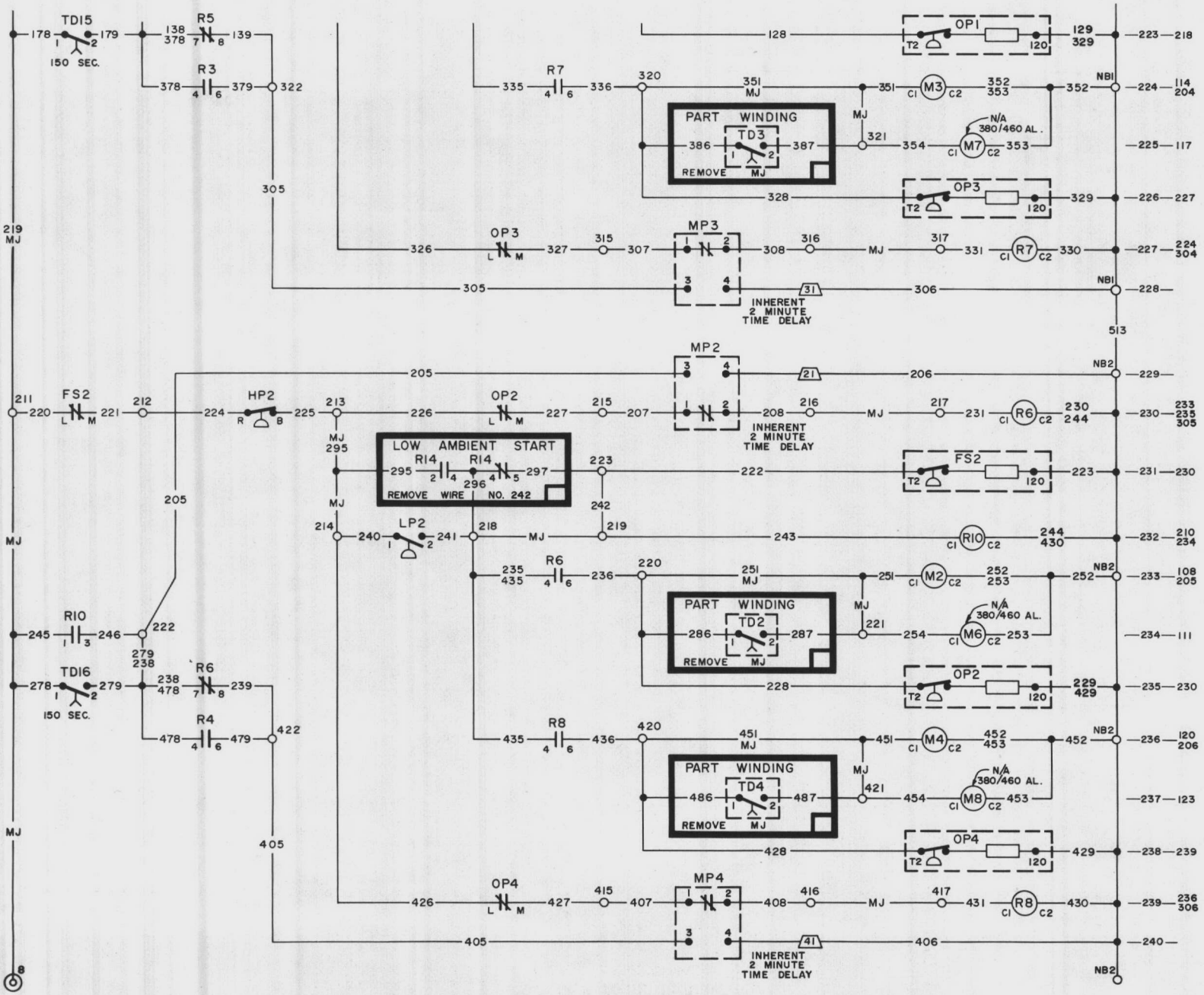

SEE PAGES 35, 36 OR 37 FOR THERMOSTAT CIRCUIT SCHEMATIC.

THERMOSTAT CIRCUIT SCHEMATIC – ALR-075B-D, 085B-D
(With Lead Lag)
LABEL 416558D REV. C

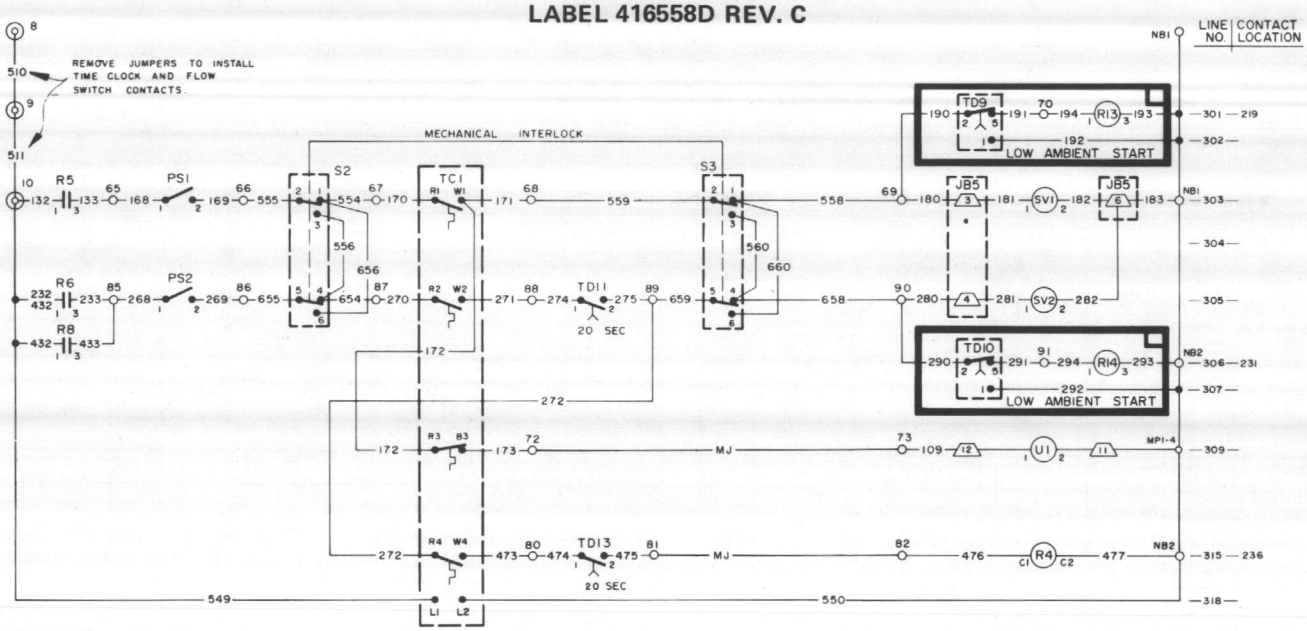

THERMOSTAT CIRCUIT SCHEMATIC – ALR-075B-D, 085B-D
(With Hot Gas Bypass)
LABEL 416559D REV. B

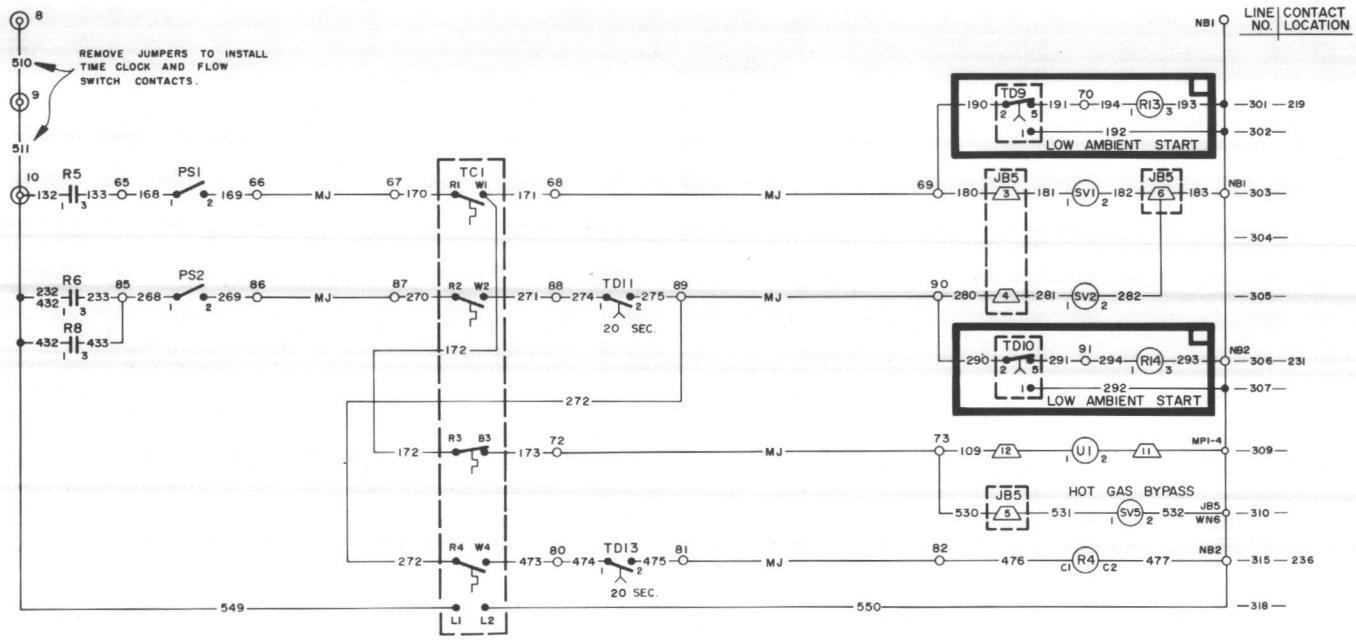

THERMOSTAT CIRCUIT SCHEMATIC – ALR-075B-D, 085B-D
(With Unloading, With Lead Lag)
LABEL 416560D REV. A

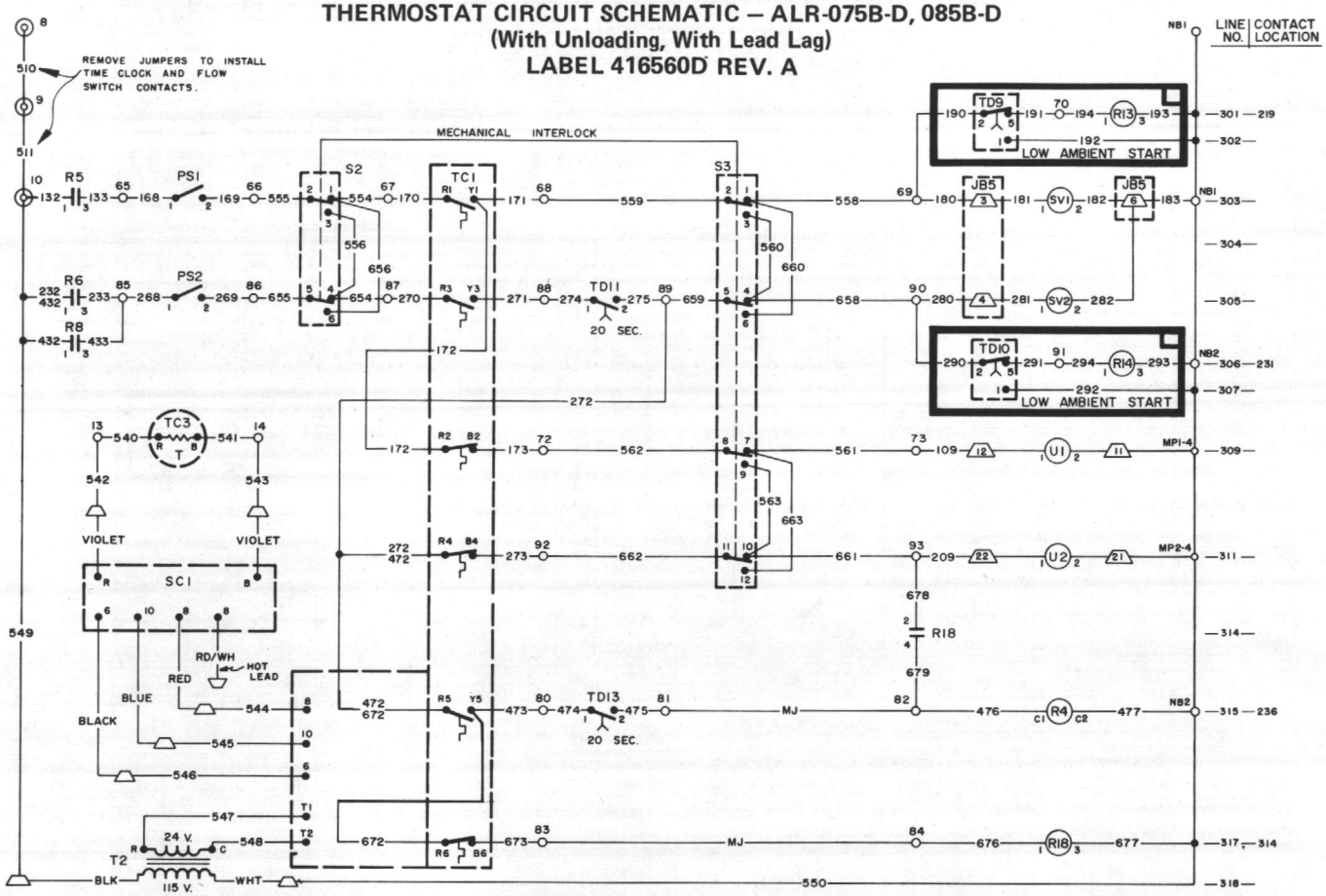

THERMOSTAT CIRCUIT SCHEMATIC – ALR-075B-D, 085B-D
(With Unloading, With Hot Gas Bypass)
LABEL 416561D REV. A

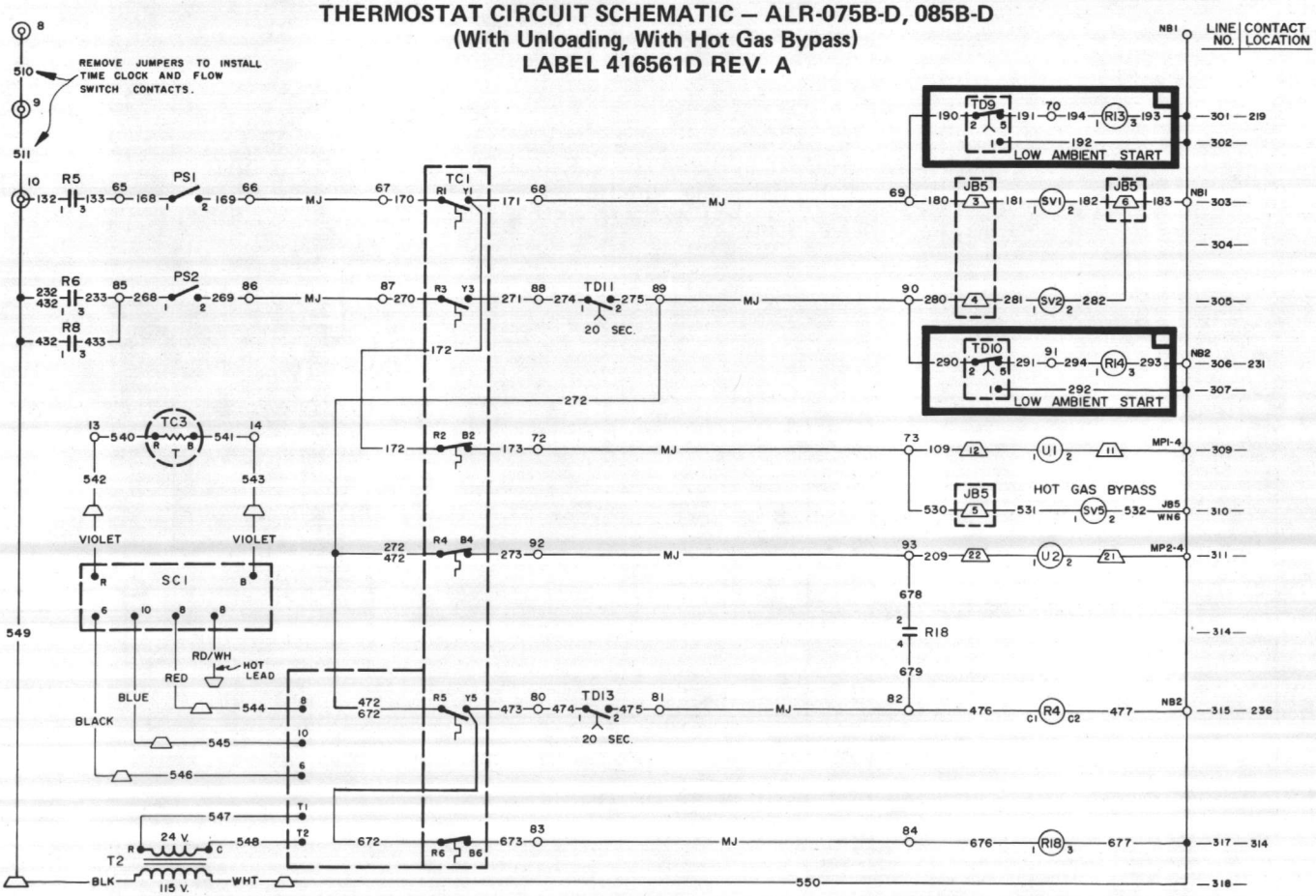

THERMOSTATIC CIRCUIT SCHEMATIC ALR-105B-D THRU 130B-D & 145A-D
(No Unloading, With Lead Lag)
LABEL 416563D REV. B

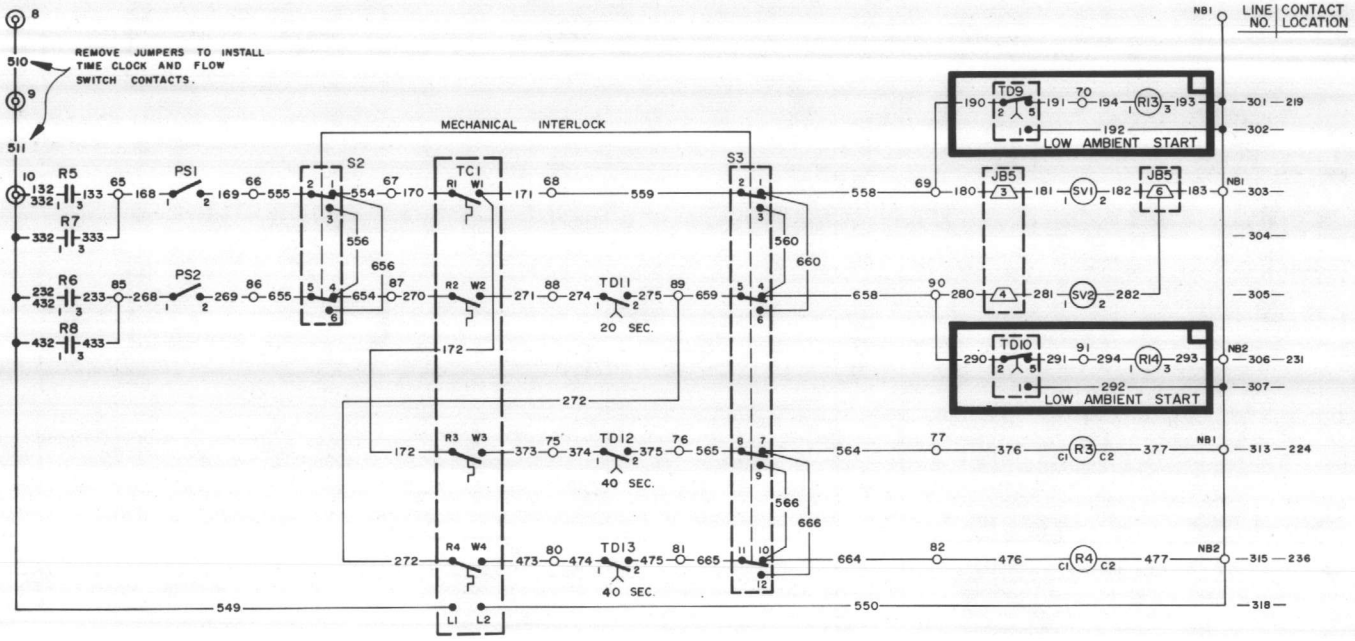

THERMOSTATIC CIRCUIT SCHEMATIC ALR-105B-D THRU 130B-D & 145A-D
(No Unloading, With Hot Gas Bypass)
LABEL 416562D REV. B

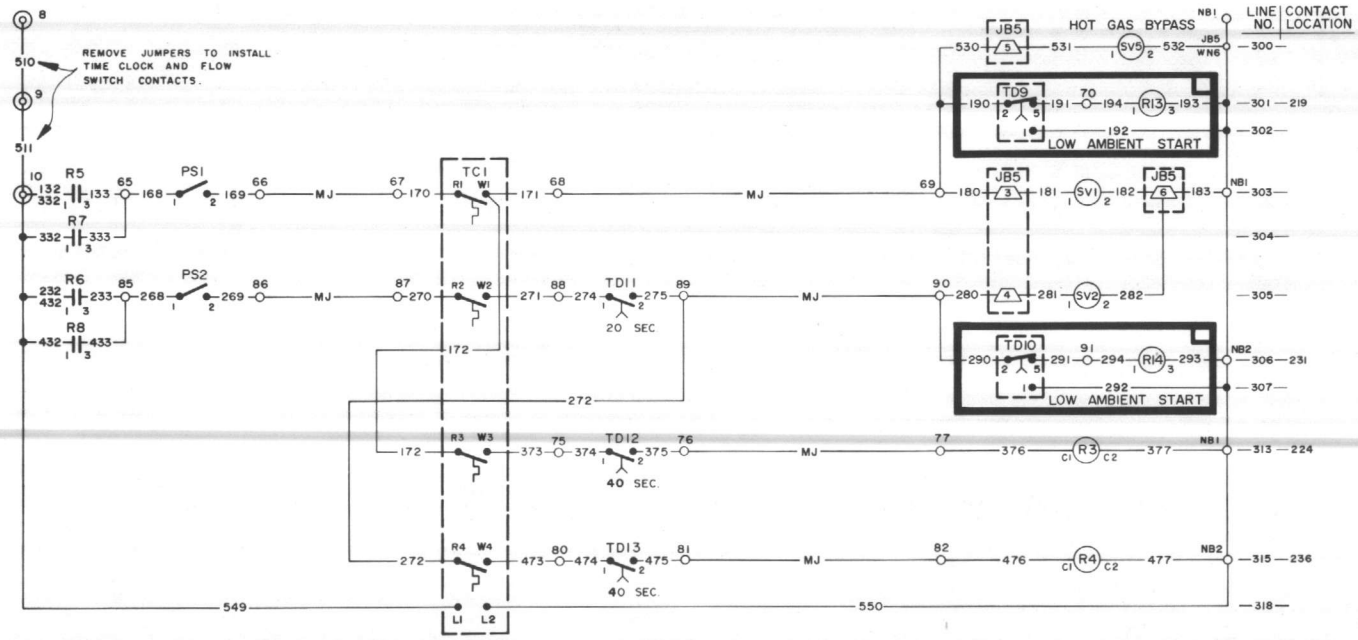

HEAT RECOVERY SCHEMATIC
ALR-105B-D THRU 130B-D & 145A
Additional heat recovery controls are shown.
Refer to standard control schematic for other controls.

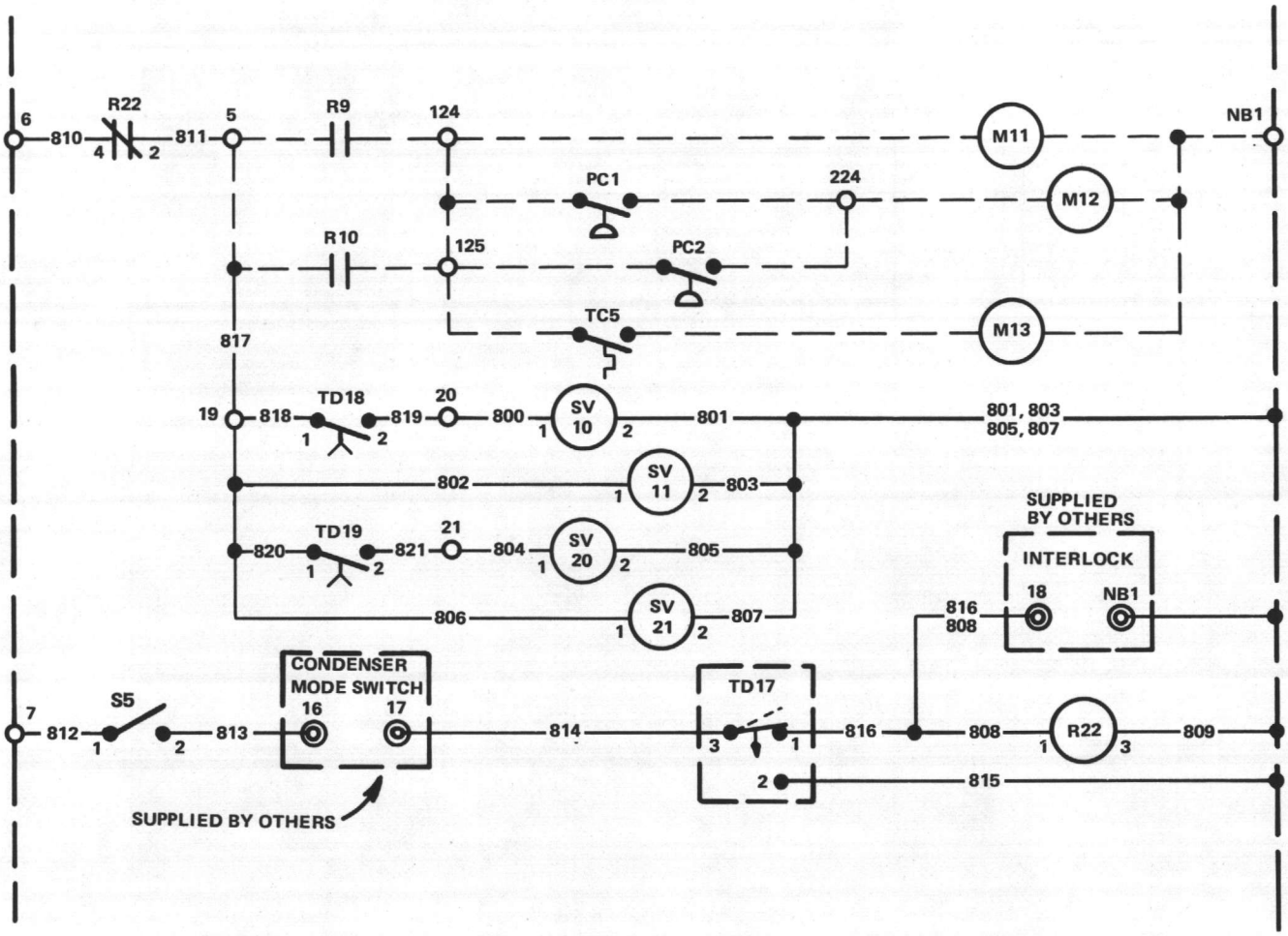

NOTE:
- — — — **Standard wiring**
- ——— **Heat recovery wiring**

THERMOSTAT CIRCUIT SCHEMATIC – ALR-105B-D THRU 130B-D & 145A-D
(With Unloading, With Lead Lag)
LABEL 416564D REV. A

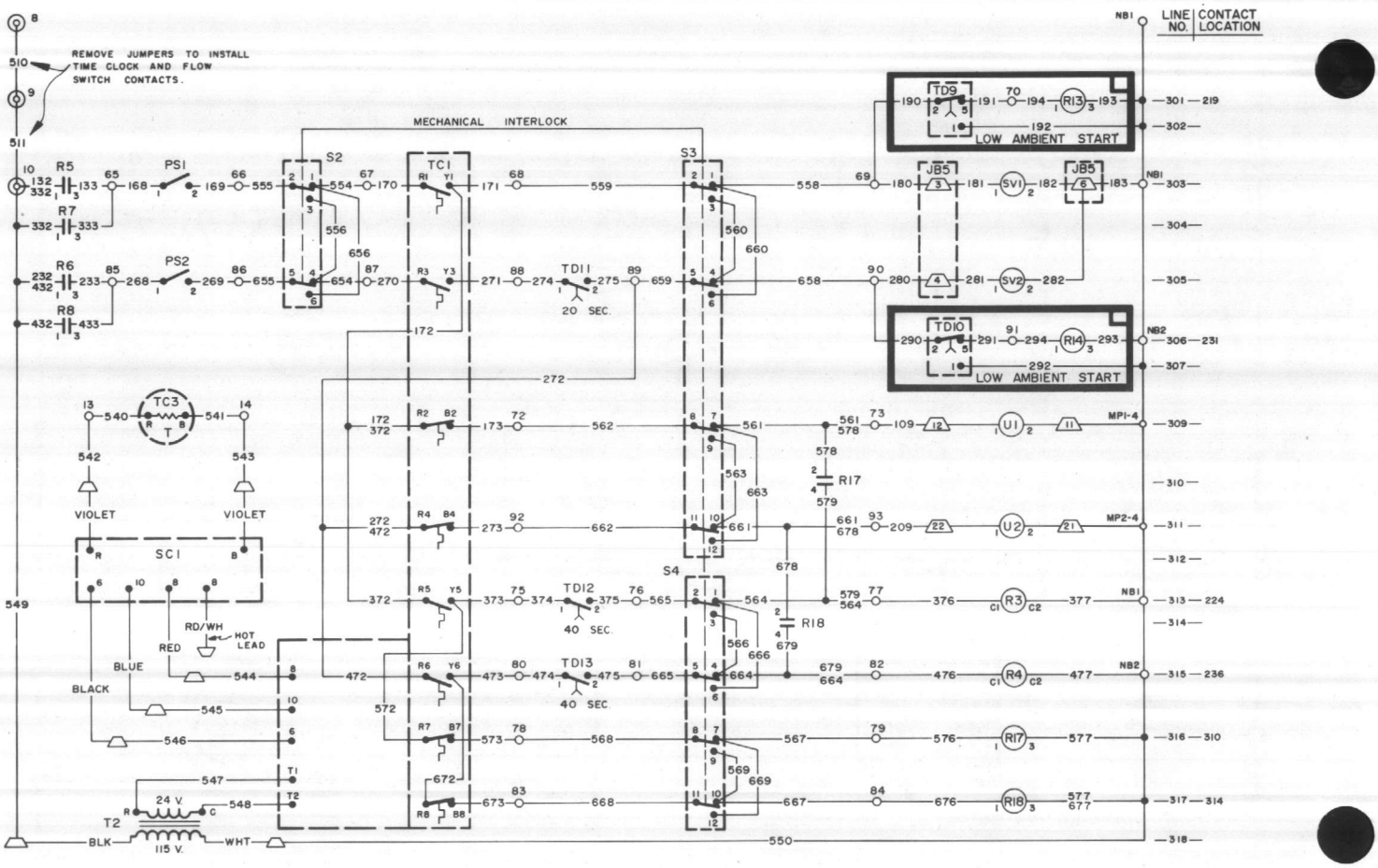

THERMOSTAT CIRCUIT SCHEMATIC – ALR-105B-D THRU 130B-D & 145A-D
(With Unloading, With Hot Gas Bypass)
LABEL 416565D REV. A

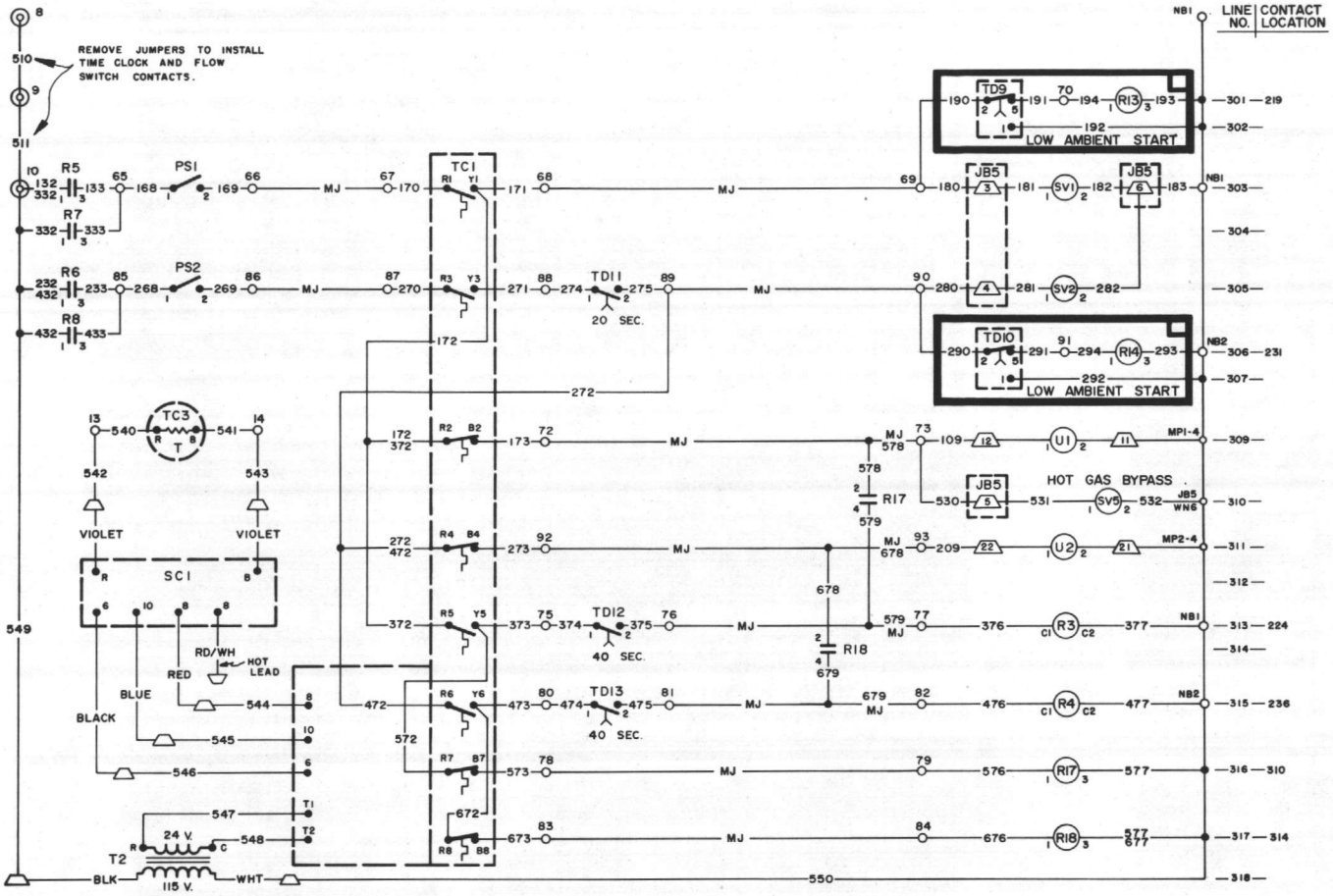

START-UP AND SHUTDOWN

PRE START-UP

1. With all electric disconnects open, check all screw or lug type electrical connections to be sure they are tight for good electrical contact. Check all compressor valve connections for tightness to avoid refrigerant loss at start-up. Although all factory connections are tight before shipment, some loosening may have resulted from shipping vibration.
2. Inspect all water piping for flow direction and correct connections at the evaporator.
3. Check to see that the thermostat water temperature sensor is installed in the return water line (return to chiller). On ALR–075B through 130B units with standard capacity reduction, or ALR-035A and 065B units with standard or optional capacity reduction, the sensor well should be full of heat conducting compound and the sensor should be secured in the well with the retaining clip provided. On ALR-075B, 085B, 105B through 130B and 145A units with optional capacity reduction, the sensor is installed directly into the return water line; i.e., no well or heat conducting compound is required.
4. Check the compressor oil level. Prior to start-up, the oil level should cover at least one-third of the oil sightglass.
5. Remove the compressor shipping blocks located beneath the compressor rails for each compressor and attached to the base of the unit.
6. Check the voltage of the unit power supply and see that it is within the ± 10% tolerance that is allowed. Phase voltage unbalance must be within ± 2%.
7. Check the unit power supply wiring for adequate ampacity and a minimum insulation temperature rating of 75C.
8. Verify that all mechanical and electrical inspections have been completed per local codes.
9. See that all auxiliary control equipment is operative and that an adequate cooling load is available for initial start-up.
10. Open the compressor suction and discharge shut-off valves until back seated. Always replace valve seal caps.
11. Making sure control stop switch S1 is open (off) and pumpdown switches PS1 and PS2 are on "manual pumpdown," throw the main power and control disconnect switches to "on." This will energize crankcase heaters. Wait a minimum of 12 hours before starting up unit.
12. Open all water flow valves and start the chilled water pump. Check all piping for leaks and vent the air from the evaporator as well as from the system piping. Flush the evaporator and system piping to obtain clean, noncorrosive water in the evaporator circuit.

CAUTION: *Most relays and terminals in the unit control center are hot with S1 and the control circuit disconnect on.*

START-UP

1. Double check that the compressor suction and discharge shut-off valves are back seated. Always replace valve seal caps.
2. Open the manual liquid line shut-off valve at the outlet of the subcooler.
3. Check to see that pumpdown switches PS1 and PS2 are in the "manual pumpdown" position. Throw the emergency stop switch S1 to the "on" position.
4. Adjust the dial on temperature controller TC1 to the desired chilled water temperature.
5. Start the auxiliary equipment for the installation by turning on the time clock, ambient thermostat and/or remote on/off switch, and chilled water pump.
6. Start the system by moving pumpdown switches PS1 and PS2 to the "auto. pumpdown" position.
7. After running the unit for a short time, check the oil level in each compressor crankcase and check for flashing in the refrigerant sightglass (see "Maintenance" on page 39).
8. After system performance has stabilized, it is necessary that the "Compressorized Equipment Warranty Form" (Form No. 206036A) be completed to obtain full warranty benefits. This form is shipped with the unit and after completion should be returned to McQuay's Service Department through your sales representative.

TEMPORARY SHUTDOWN

Move pumpdown switches PS1 and PS2 to the "manual pumpdown" position. After the compressors have pumped down, turn off the chilled water pump.

NOTE: *With the unit left in this condition, it is capable of recycling pumpdown operation. To defeat this mode of operation, move control stop switch S1 to the "off" position.*

It is important that the compressors pump down before the water flow to the unit is interrupted to avoid freeze-up in the evaporator.

START-UP AFTER TEMPORARY SHUTDOWN

1. Start the chilled water pump.
2. With emergency stop switch S1 in the "on" position, move pumpdown switches (PS1 and PS2) to the "auto. pumpdown" position.
3. Observe the unit operation for a short time to be sure that the compressors do not cut out on low oil pressure.

EXTENDED SHUTDOWN

1. Close the manual liquid line shut-off valves.
2. After the compressors have pumped down, turn off the chilled water pump.
3. Turn off all power to the unit and to the chilled water pump.
4. Move the emergency stop switch S1 to the "off" position.
5. Close the compressor suction and discharge valves.
6. Tag all opened disconnect switches to warn against start-up before opening the compressor suction and discharge valves.
7. Drain all water from the unit evaporator and chilled water piping if the unit is to be shut down during winter.

SYSTEM MAINTENANCE

GENERAL

On initial start-up and periodically during operation, it will be necessary to perform certain routine service checks. Among these are checking the compressor oil level and taking condensing, suction and oil pressure readings. During operation, the oil level should be visible in the oil sightglass with the compressor running. On units ordered with gauges, condensing, suction and oil pressures can be read from the unit control center. The gauges are factory installed with a manual shut-off valve on each gauge line. The valves should be closed at all times except when gauge readings are being taken. On units ordered without gauges, the gauge shut-off valves come factory installed inside the unit control center for convenient connection of service gauges from outside the unit.

FAN SHAFT BEARINGS (ALR-075B-D, 085B-D, 105B-D THRU 130B-D & 145A-D)

The fan shaft bearings do not require lubrication at the time the unit is put into service. The fan shaft bearings should be greased once a year using Standard Oil Company Amco Multi-Purpose Lithium Grease. *DO NOT OVERLUBRICATE.*

ELECTRICAL TERMINALS

CAUTION: ELECTRIC SHOCK HAZARD. TURN OFF ALL POWER BEFORE CONTINUING WITH FOLLOWING SERVICE.

All power electrical terminals should be retightened every six months, as they tend to loosen in service due to normal heating and cooling of the wire.

COMPRESSOR OIL LEVEL

The oil level should be watched carefully upon initial start-up and for sometime thereafter.

At the present time, Suniso No. 3GS oil is the only oil approved by Copeland for use in these compressors. The oil level should be maintained at about one-third of the sight-glass on the compressor body.

Oil may be added to the Copeland compressor through the oil fill hole in the crankcase and to the Sundstrand compressor through the 3/8-inch process tube on the side of the compressor. To add oil, isolate the crankcase and pour or pump the necessary oil in. If the system contains no refrigerant, no special precautions are necessary other than keeping the oil clean and dry.

If the system contains a refrigerant charge, close the suction valve and reduce crankcase pressure to 1 to 2 PSIG. Stop the compressor and close the discharge valve.

Add the required amount of oil. During the period the compressor is exposed to the atmosphere, the refrigerant will generate a vapor pressure, retarding the entrance of contaminants. Before resealing the compressor, purge the crankcase by opening the suction valve slightly for 1 or 2 seconds. Close the oil port, open the compressor valves and restore the system to operation.

CONDENSERS

Condensers are air cooled and constructed with 3/8 O.D. copper tubes bonded in a staggered pattern into rippled aluminum fins. No maintenance is ordinarily required except the occasional removal of dirt and debris from the outside surface of the fins. Care should be taken not to damage the fins during cleaning. Periodic use of the purge valve on the condenser will prevent the buildup of non-condensables.

On heat recovery units, if the condenser or discharge piping must be repaired the following procedure should be used to prevent excessive refrigerant loss. **NOTE:** *Circuit number 2 components are in parentheses ( ). Start with unit OFF.*

CAUTION: ELECTRIC SHOCK HAZARD. TURN OFF ALL POWER TO UNIT WHILE COMPLETING STEPS 1, 2 & 3.

1. Remove wires to solenoid valve SV10 (SV20) so valve will remain open when power is turned back on.
2. Install jumpers to energize SV11 (SV21) to open valve when unit is turned on.
3. Pull fuses to condenser fan motors.
4. Run water through cooler and shell-and-tube condenser.
5. With a cooling load on the cooler, turn on the unit with pumpdown switch PS1 (PS2) in the auto pumpdown position.
6. After five minutes move pumpdown switch PS1 (PS2) to the manual pumpdown position.
7. After unit has pumped down, move control stop switch to the "off" position to prevent possible recycling pumpdown.
8. Immediately close ball valve ahead of shell-and-tube condenser and rotolock valves on compressors.
9. Close manual liquid line valve.
10. Majority of refrigerant should now be in shell-and-tube condenser.

REFRIGERANT SIGHTGLASS

The refrigerant sightglasses should be observed periodically. (A monthly observation should be adequate.) A clear glass of liquid indicates that there is adequate refrigerant charge in the system to insure proper feed through the expansion valve. Bubbling refrigerant in the sightglass indicates that the system is short of refrigerant charge. An element inside the sightglass indicates what moisture condition corresponds to a given element color. If the sightglass does not indicate a dry condition after a few hours of operation, the unit should be pumped down and the cores in the filter-driers changed.

LEAD-LAG

A standard feature on all McQuay ALR air cooled chillers is a system for reversing the sequence that compressors start in. (Chillers with the hot gas bypass option do not have lead-lag.) For example, on a 4-compressor unit with the lead-lag switches in the "circuit 1 leads" position, the normal starting sequence is 1, 2, 3, 4. With the lead-lag switches in the "circuit 2 leads" position, the reversed starting sequence is 2, 1, 4, 3. It is achieved electrically by a multi-pole switching arrangement (see "Control Schematics" on pages 16 through 37). It is suggested that the lead-lag switches in the unit control center be switched annually to provide even compressor life.

SERVICE

NOTE: Service on this equipment is to be performed by qualified refrigeration personnel. Causes for repeated tripping of safety controls must be investigated and corrected. CAUTION: Disconnect all power before doing any service inside the unit.

FILTER-DRIERS

To change the filter-drier core(s), pump the unit down by moving pumpdown switches (PS1 and PS2) to the "manual pumpdown" position. Turn off all power to the unit and install jumpers across the terminals shown in the table.

UNIT SIZE	CIRCUIT NO.	JUMPER ACROSS TERMINALS
035A – 076A 076A, 084A, 094A	1	114 to 116
	2	214 to 216
075B, 085B 105B–130B, 145A	1	114 to 118
	2	214 to 218

Turn power to the unit back on and re-start the unit by moving pumpdown switches (PS1 and PS2) to the "auto. pumpdown" position. Close the manual liquid line shut-off valve(s) and when evaporator pressure reaches 0 PSIG, move the control stop switch S1 to the "off" position. This will close the liquid line solenoid valve(s) and isolate the short section of refrigerant piping containing the filter-drier(s). Remove the cover plate from the filter-drier shell and replace the core(s).

After core replacement, replace the cover plate. A leak check around the flange of the filter-drier shell is recommended after the cores have been changed.

LIQUID LINE SOLENOID VALVE

The liquid line solenoid valves, which are responsible for automatic pumpdown during normal unit operation, do not normally require any maintenance. They may, however, require replacement of the solenoid coil or of the entire valve assembly.

The solenoid coil may be removed from the valve body without opening the refrigerant piping by moving pumpdown switches (PS1 and PS2) to the "manual pumpdown" position. The coil can then be removed from the valve body by simply removing a nut or snap-ring located at the top of the coil. The coil can then be slipped off its mounting stud for replacement. Be sure to replace the coil on its mounting stud before returning pumpdown switches (PS1 and PS2) to the "auto. pumpdown" position.

To replace the entire solenoid valve, the unit must be pumped down by use of the manual liquid line shut-off valve.

THERMOSTATIC EXPANSION VALVE

The expansion valve is responsible for allowing the proper amount of refrigerant to enter the evaporator regardless of cooling load. It does this by maintaining a constant superheat. (Superheat is the difference between refrigerant temperature as it leaves the evaporator and the saturation temperature corresponding to the evaporator pressure.) All ALR chillers are factory set for between 8F and 12F superheat. If it is necessary to increase the superheat setting of the valve, remove the cap at the bottom of the valve to expose the adjustment screw. Turn the screw clockwise (when viewed from the adjustment screw end) to increase the superheat setting and counterclockwise to reduce superheat. Allow time for system rebalance after each superheat adjustment.

The expansion valve, like the solenoid valve, should not normally require replacement, but if it does, the unit must be pumped down by using the manual liquid line shut-off valve. If the problem can be traced to the power element only, it can be unscrewed from the valve body without removing the valve, but only after pumping the unit down with the manual liquid line shut-off valves.

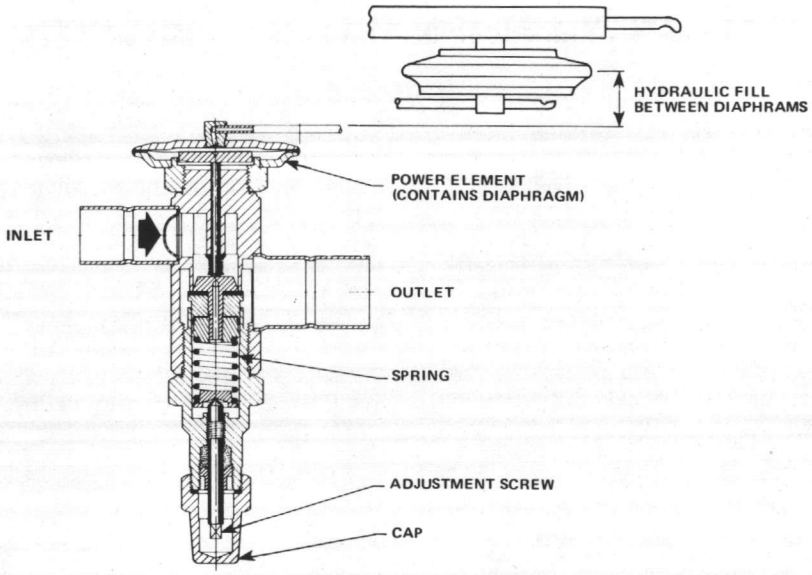

EVAPORATOR

The evaporator is of the direct expansion, shell-and-tube type with refrigerant flowing through the tubes and water flowing through the shell over the tubes. The tubes are internally finned to provide extended surface as well as turbulent flow of refrigerant through the tubes. Normally no service work is required on the evaporator. There may be instances where a tube will leak refrigerant into the water side of the system. In the cases where only one or two tubes leak, the problem can best be solved by plugging the tube at both ends. When the tube must be replaced, the old tube can be removed and replaced.

To remove a tube, the unit should be temporarily pumped down by moving pumpdown switches (PS1 and PS2) to the "manual pumpdown" position. Power to the unit should be shut off to install jumpers. (See table in filter-drier section for terminal numbers.) Turn power to the unit back on, then pumpdown both refrigerant circuits until evaporator pressure is at or near 0 PSIG by closing the manual liquid line shut-off valves at the outlet of each condenser. Close both compressor suction valves and the manual liquid line valves. These steps will insure a minimum amount of refrigerant loss when the evaporator is opened up. The tubes are mechanically expanded into the tube sheets (see figure below) at each end of the cooler. In order to remove the tubes, it is necessary to break this bond by collapsing the tube. After doing this at both ends of the shell, the tube can be removed for replacement. The new tube can then be inserted and re-expanded into the tube sheet.

NOTE: *The bond produced by expansion must be refrigerant tight. This bond must be produced by rolling the tube into the tube sheet.*

After re-assembling the evaporator, a small amount of refrigerant should be introduced by momentarily opening the manual liquid line valve. A leak check should then be performed on the evaporator.

Tube removal can only take place after the leaking tube is located. This aspect depends on the ingenuity of the serviceman. One method that would work would be to subject each tube to air pressure by plugging each end, and with a pressure gauge attached to one of the end plugs, observe to see if there is a loss of air pressure over a period of a minute or two.

NOTE: *The evaporator should always be supplied with clean water to minimize scale buildup on the refrigerant tubes.*

TOP VIEW OF TYPICAL DUAL CIRCUIT SHELL-AND-TUBE EVAPORATOR

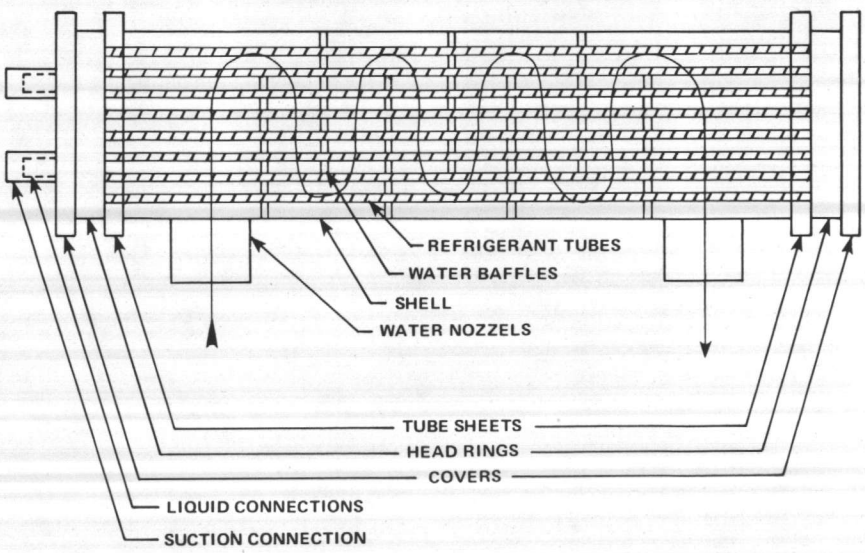

IN-WARRANTY RETURN MATERIAL PROCEDURE

COMPRESSOR

Copeland Refrigeration Corporation has stocking wholesalers who maintain a stock of replacement compressors and service parts to serve refrigeration contractors and servicemen.

When a compressor fails in warranty, contact your local sales representative, or McQuay Warranty Claims Department at the address on the cover of this bulletin. You will be authorized to exchange the defective compressor at a Copeland Wholesaler, or an advance replacement can be obtained. A credit is issued to you by the wholesaler for the returned compressor after Copeland factory inspection of the inoperative compressor. If that compressor is out of Copeland's warranty, a salvage credit only is allowed. Provide McQuay with full details: McQuay unit model and unit serial numbers. Include the invoice and the salvage value credit memo copies and we will reimburse the difference. In this transaction, be certain that the compressor is definitely defective. If a compressor is received from the field that tests satisfactorily, a service charge plus a transportation charge will be charged against its original credit value.

On all out-of-warranty compressor failures, Copeland offers the same field facilities for service and/or replacement as described above. The credit issued by Copeland on the returned compressor will be determined by the repair charge established for that particular unit.

COMPONENTS OTHER THAN COMPRESSORS

Material may not be returned except by permission of authorized factory service personnel of McQuay Inc. at Minneapolis, Minnesota. A "Return Goods" tag will be sent to be included with the returned material. Enter the information as called for on the tag in order to expedite handling at our factories and prompt issuance of credits.

The return of the part does not constitute an order for replacement. Therefore, a purchase order must be entered through your nearest McQuay Representative. The order should include part name, part number, model number and serial number of the unit involved.

Following our personal inspection of the returned part, and if it is determined that the failure is due to faulty material or workmanship, and in warranty, credit will be issued on customer's purchase order.

All parts shall be returned to the pre-designated McQuay factory, transportation charges prepaid.

APPENDIX

STANDARD CONTROLS

NOTE: PERFORM AN OPERATIONAL CHECK ON ALL UNIT SAFETY CONTROLS ONCE PER YEAR.

OIL PRESSURE SAFETY CONTROL

The oil pressure safety control is a manually resettable device which senses the differential between oil pressure at the discharge of the compressor oil pump and suction pressure inside the compressor crankcase. When the oil pressure reaches approximately 15 PSI above the crankcase suction pressure, the pressure actuated contact of the control opens from its normally closed position. If this pressure differential cannot be developed, the contact will remain closed and energize a heater element within the control. The heater element warms a normally closed bimetallic contact and causes the contact to open, de-energizing a safety relay and breaking power to the compressor.

It takes about 120 seconds to warm the heater element enough to open the bimetallic contact, thus allowing time for the pressure differential to develop.

If during operation, the differential drops below 10 PSI, the heater element will be energized and the compressor will stop. The control can be reset by pushing the reset button on the control. If the compressor does not restart, allow a few minutes for the heater element and bimetallic contacts to cool and reset the control again.

To check the control, pump down and shut off all power to the unit. Remove the compressor fuses, and install a voltmeter between terminals "L" and "M" of the oil pressure control. Turn on power to the unit control circuit (separate disconnect or main unit disconnect depending on the type of installation). Check to see that the control stop switch S1 is in the "on" position. The control circuit should now be energized, but with the absence of the compressor fuses, no oil pressure differential can develop and thus the pressure actuated contacts of the control will energize the heater element and open the bimetallic contacts of the control within 120 seconds. When this happens, the safety relay is de-energized, the voltmeter reading will rise to 115V, and the compressor contactor should open. Repeated operations of the control will cause a slight heat buildup in the bimetallic contacts, resulting in a slightly longer time for reset with each successive operation.

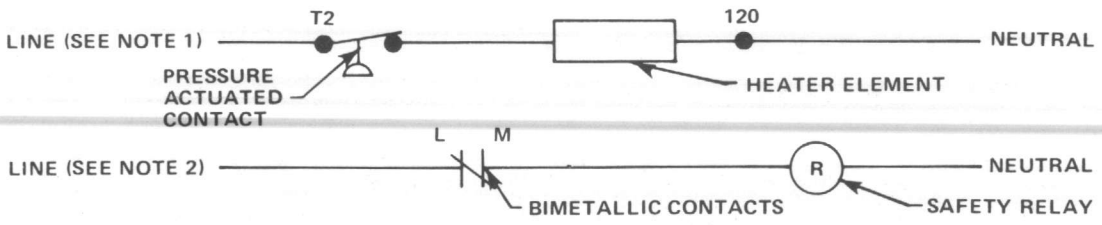

NOTES: 1. Hot only when the unit thermostat calls for compressor to run.
2. Hot only when other safety control contacts are closed.

HIGH PRESSURE CONTROL

The high pressure control is a single pole pressure activated switch that opens on a pressure rise to de-energize the entire control circuit except for compressor crankcase heaters. It senses condenser pressure and is factory set to open at 380 PSIG and can be manually reset closed at 315 PSIG. To check the control, either block off condenser surface or start the unit with fuses in only one fan fuse block (FB11) and observe the cut-out point of the control by watching condenser pressure rise. The highest point reached before cut-out is the cut-out setting of the control.

CAUTION: *Although there is an additional pressure relief device in the system set at 450 PSIG, it is highly recommended that the "control stop" switch S1 be close at hand in case the high pressure control should malfunction.*

LOW PRESSURE CONTROL

The low pressure control is a single pole pressure switch that closes on a pressure rise. It senses evaporator pressure and is factory set to close at 60 PSIG and automatically open at 35 PSIG. To check the control (unit must be running), move the pumpdown switch(es) PS1 and PS2 to the "manual pumpdown" position. As the compressor pumps down, condenser pressure will rise and evaporator pressure will drop. The lowest evaporator pressure reached before cut-out is the cut-out setting of the control. By moving the pumpdown switch(es) PS1 and PS2 to the "auto. pumpdown" position, evaporator pressure will rise. The highest evaporator pressure reached before compressor re-start is the cut-in setting of the control.

FREEZE CONTROL

The freeze control is very similar to the oil pressure control in operation except that it senses evaporator pressure only, rather than a pressure differential. It contains a pressure actuated contact that upon a fall in evaporator pressure energizes a heater element that in turn opens a normally closed bimetallic contact. When the bimetallic contact opens, it de-energizes the entire control circuit except for the compressor crankcase heaters and cooler heater. The control is factory set to close at 52 PSIG and open at 54 to 57 PSIG. It takes approximately 60 seconds to warm the heater element enough to open the bimetallic contact. This time delay period prevents nuisance cut-outs due to a momentary drop in suction pressure, but since the control senses pressure rather than temperature, it still provides quicker response for protection than a temperature sensing control.

To check the control, the system must be operating. A voltmeter should be connected across terminals of the pressure activated contact. With the unit running, there should be a 115 volt potential across these terminals. Observing evaporator pressure, move the pumpdown switch(es) PS1 and PS2 to the "manual pumpdown" position. Evaporator pressure will begin to drop. When the voltmeter goes to zero, the pressure activated contacts of the control will have closed. Note the evaporator pressure at which this happens. Because the unit will have pumped down before the 60-second delay period, bimetallic contacts "L" and "M" will not open before the unit shuts down. This part of the control operation may be checked after the pumpdown cycle is complete by connecting a jumper from terminal 1 in the control center to terminal T2 of the control. This will energize the heater element of the control, provided that evaporator pressure is sufficiently low. Within about 60 seconds, the bimetallic contacts of the control should open.

Should the control(s) cause the unit to shut down during normal operation, a period of about 2 minutes will be required before the bimetallic contacts of the control will have cooled enough to allow the control to be manually reset. Similar to the oil pressure safety control, repeated successive operations of the freeze control will prolong the time required before reset.

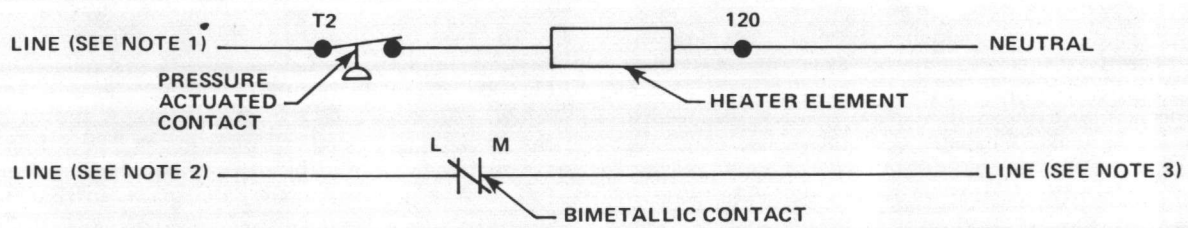

NOTES: 1. Hot whenever unit compressor(s) is running.
2. Hot whenever control circuit flow switch and control stop switch (S1) are closed.
3. Provides power to energize compressor contactors through low pressure relay (R9 or R10).

FANTROL – HEAD PRESSURE CONTROL

FANTROL is a method of head pressure control which automatically cycles the condenser fans in response to condenser pressure and ambient air temperature. This maintains head pressure and allows the unit to run at low ambient air temperatures.

For ALR-035A thru 065B, 076A, 084A, 094A:
These units have dual independent circuits with the fans for circuit 1 (11, 12, 13, 14) and circuit 2 (21, 22, 23, 24) being controlled independently by the condensing pressure and ambient air of each circuit. Fans 11 and 21 start with each compressor and fans 12 and 22 cycle on and off in response to condenser pressure. The cut-out and cut-in pressures are given in Table 13. Fans 13 and 14 (circuit 1) and fans 23 and 24 (circuit 2) are controlled by ambient temperature and are factory set at the values given in Table 13. Note that the number of fans on each unit varies.

For ALR-075B, 085B, 105B thru 130B, & 145A:
The first fan (11) is started when the first compressor in the unit starts. Fan 12 is controlled by parallel wired pressure switches which sense condenser pressure in circuits 1 and 2. The third fan (13) is controlled by parallel wired temperature switches, one of which senses condenser inlet air for circuit 1 and the other senses condenser inlet air for circuit 2. Refer to Table 7 for cut-out and cut-in settings of these controls.

TABLE 7. FACTORY FANTROL SETTINGS

ALR UNIT SIZE	CONDENSER FAN											
	PC12		PC22		TC13		TC23		TC14		TC24	
	CUT-IN	CUT-OUT	CUT-IN	CUT-OUT	CUT-IN	CUT-OUT	CUT-IN	CUT-OUT	CUT-IN	CUT-OUT	CUT-IN	CUT-OUT
035A	250 PSI	150 PSI	–	–	74F	60F	–	–	69F	64F	–	–
040A	225 PSI	155 PSI	225 PSI	155 PSI	–	–	–	–	–	–	–	–
050A	255 PSI	170 PSI	255 PSI	170 PSI	74F	69F	74F	69F	–	–	–	–
060B	270 PSI	170 PSI	270 PSI	170 PSI	74F	69F	74F	69F	69F	64F	69F	64F
065B	280 PSI	170 PSI	280 PSI	170 PSI	74F	69F	74F	69F	66F	61F	66F	61F
076A	290 PSI	170 PSI	290 PSI	170 PSI	74F	69F	74F	69F	66F	61F	66F	61F
084A	290 PSI	170 PSI	290 PSI	170 PSI	74F	69F	74F	69F	66F	61F	66F	61F
094A	290 PSI	170 PSI	290 PSI	170 PSI	74F	69F	74F	69F	66F	61F	66F	61F
075B, 085B, 105B thru 130B, 145A	270 PSI*	170 PSI*	–	–	80F**	70F**	–	–	–	–	–	–

*PC1 & PC2 **TC5 & TC6

OPTIONAL CONTROLS

SPEEDTROL – HEAD PRESSURE CONTROL
ALR-035A thru 065B, 076A, 084A, 094A

The SPEEDTROL system of head pressure control operates in conjunction with FANTROL by modulating the motor speed on fans 11 and 21 in response to condensing pressure. By reducing the speed of the last fan as the condensing pressure falls, the unit can operate at lower ambient temperatures.

The SPEEDTROL fan motor is a single-phase, 208/240 volt, thermally protected motor specially designed for variable speed application. The solid state speed controls SC11 and SC21 are mounted inside the compressor compartment near the top of the condenser coils. Units with 460 volt power have a transformer mounted on the back of the control box to step the voltage down to 230 volts for the SPEEDTROL motor.

The SPEEDTROL control starts to modulate the motor speed at approximately 230 PSIG and maintains a minimum condensing pressure of 170 to 180 PSIG.

DAMPERTROL – HEAD PRESSURE CONTROL
ALR-075B, 085B, 105B thru 130B, & 145A

DAMPERTROL is an optional system for reducing condenser capacity. It consists of an assembly of damper blades, linkages and blade operators installed over the first fan turned on by FANTROL (fan no. 11) and arranged to operate as shown. The blade operators sense condenser pressure and extend or contract in response to the pressure to open or close the damper blades as required to maintain adequate condenser pressure. The operators are factory set to begin opening the damper blades at 170 ± 5 PSIG and to be fully open at 250 ± 10 PSIG.

To check the damper blade operator pressure settings, the unit should be started with the fuses removed from fans 11 and 13 (on 3-fan units only). At condenser pressures below 170 ± 5 PSIG, the damper blades should be completely closed. As pressure rises above 170 ± 5 PSIG, the damper blades should begin opening and be fully open at 250 ± 10 PSIG. Leaving the fuses in on fan 12 will prevent head pressure from becoming excessive since this fan will start after the fully open setting of the damper operators has been observed.

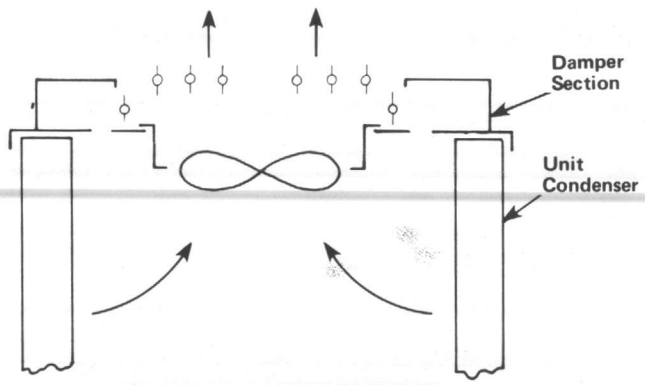

DAMPERTROL IN OPEN POSITION

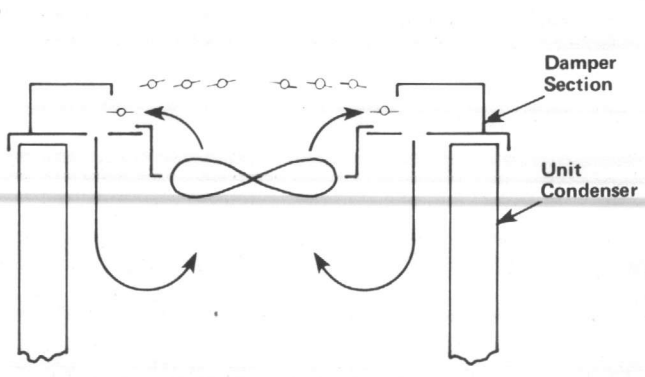

DAMPERTROL IN CLOSED POSITION

PART WINDING START (OPTIONAL)

Part winding start is available on all voltage units and consists of a solid state time delay wired in series with the contactor that energizes the second winding of each compressor motor. Its purpose is to limit current in-rush to the compressors upon start-up. As each compressor starts, the contactor for the first motor winding is delayed for 1 second.

Control checkout is best accomplished by observation as each contactor is pulled in to see that the 1 second delay occurs before the second contactor pulls in.

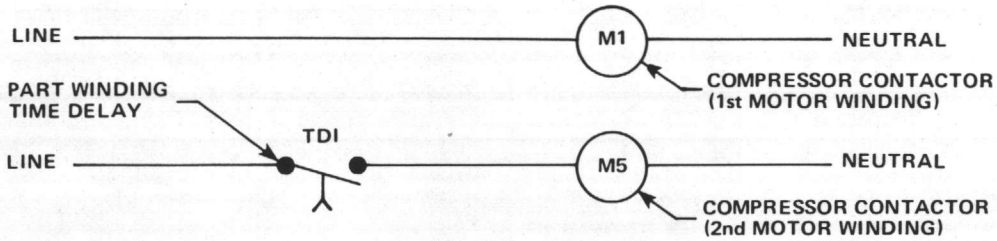

NOTE: Line is only hot when the unit thermostat calls for compressor to run.

LOW AMBIENT START (OPTIONAL)

Low ambient start is available on all units as an option with FANTROL and included automatically with optional DAMPERTROL or SPEEDTROL. It consists of a solid state, normally closed time delay wired in series with a relay. These are both wired in parallel to the liquid line solenoid valve so that when the solenoid valve is energized by the unit thermostat, the low ambient start relay is also energized through the time delay. The relay has contacts that essentially short-circuit the low pressure control and freezestat and allow the compressor to start with the low pressure control open.

After about 2-3/4 minutes, the time delay will open and de-energize the relay. If the system has not built up enough evaporator pressure to close the low pressure control, the compressor will stop. The time delay can be reset to its original normally closed position by moving the pumpdown switch(es) PS1 or PS2 to the "manual pumpdown" position. Moving the pumpdown switch back to the "auto. pumpdown" position will again energize the relay for another attempt at start-up. If the system has built up enough evaporator pressure, the compressor will continue to run.

To check the control, turn off all power to the unit and remove the wire(s) leading to the terminals of the low pressure control(s) LP1 and LP2. Remove the compressor fuses and jumper across terminals "L" and "M" of the freeze control(s) and oil pressure safety control(s). Energize the control circuit by turning on the control circuit disconnect or main power disconnect (depending on the installation) and the control stop switch S1. The compressor contactors should pull in instantly.

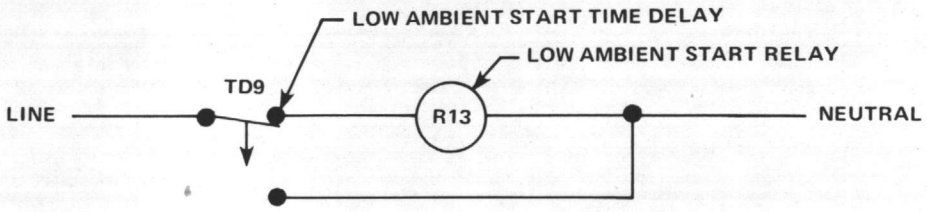

NOTE: Line is only hot when the unit thermostat calls for compressor to run.

COMPRESSOR LOCKOUT (Optional on ALR-035A thru 065B, 076A, 084A, 094A)

Compressor lockout consists of a solid state time delay wired in series with the compressor contactor(s). Its purpose is to prevent rapid compressor cycling when cooling demands are erratic. The circuit illustrated above is for the lead compressor in each refrigerant circuit. The circuit for the second compressor(s) performs the same function but is wired differently (see unit wiring diagram).

When the unit thermostat no longer calls for cooling and the compressor contactor(s) have opened, the lockout time delay breaks open the circuit, preventing compressor re-start.

The circuit remains open for a period of 5 minutes so that, if the unit thermostat should call for cooling before the delay period has expired, the compressor will not re-start. After 5 minutes, the time delay will close its contacts to complete the circuit and be ready for start-up. The time delay opens its contacts whenever power to terminal 4 is interrupted and resets closed automatically after the time delay period.

To check the control, the compressor(s) must be running initially. Move the pumpdown switch (PS1 or PS2) to the "manual pumpdown" position. Immediately after the compressor(s) have stopped running, move the pumpdown switch back to the "auto. pumpdown" position. The lead compressor should not re-start for 5 minutes. The second compressor in the refrigerant circuit should start approximately 20 seconds after the lead compressor, provided that the cooling load is high enough to require it. Each refrigerant circuit can be checked the same way.

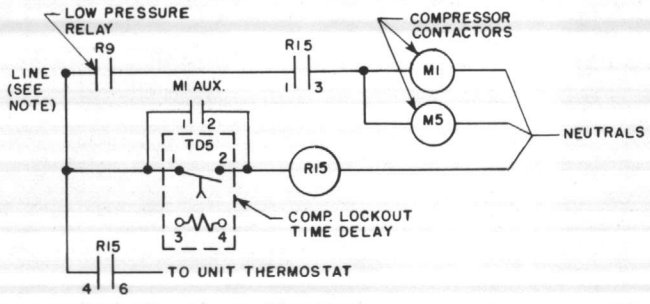

NOTE: Hot whenever freeze control and high pressure control permit safe operation

HOT GAS BYPASS (OPTIONAL)

Hot gas bypass is a system for maintaining evaporator pressure at or above a minimum value. The purpose for doing this is to keep the velocity of the refrigerant as it passes through the evaporator high enough for proper oil return to the compressor when cooling load conditions are light.

The system consists of a solenoid valve piped in series with a pressure regulating valve as shown below. The solenoid valve is factory wired to open whenever the unit thermostat calls for the first stage of cooling. The pressure regulating valve is factory set to begin opening at 58 PSIG (32F for R-22) when the air charged bulb is in an 80F ambient temperature. Since the bulb is factory mounted on the suction line, and suction line temperatures are usually in the 50F to 60F range, the chart above indicates that for ALR chillers, the valve is factory set to begin opening at 54 to 56 PSIG. This setting can be changed as indicated above by changing the pressure of the air charge in the adjustable bulb. To raise the pressure setting, remove the cap on the bulb and turn the adjustment screw clockwise. To lower the setting, turn the screw counterclockwise. Do not force the adjustment beyond the range it is designed for, as this will damage the adjustment assembly.

The regulating valve opening point can be determined by slowly reducing the system load (or increasing the required chilled water temperature setting indicated on the unit thermostat), while observing the suction pressure. When the bypass valve starts to open, the refrigerant line on the evaporator side of the valve will begin to feel warm to the touch.

CAUTION: *The hot gas line may become hot enough to cause injury in a very short time, so care should be taken during valve checkout.*

HOT GAS BYPASS PIPING DIAGRAM

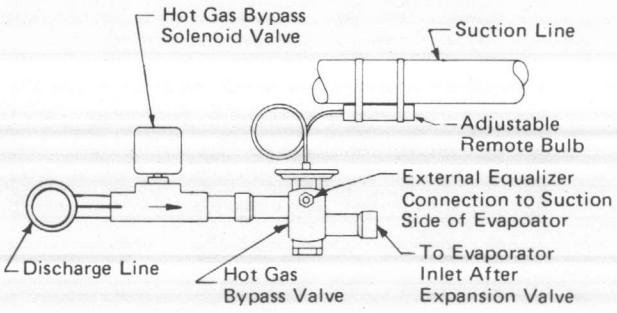

HOT GAS BYPASS ADJUSTMENT RANGE

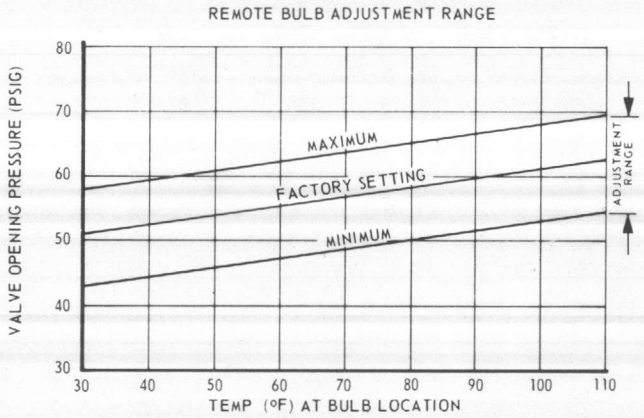

TROUBLE SHOOTING CHART

PROBLEM	POSSIBLE CAUSES	POSSIBLE CORRECTIVE STEPS
Compressor will not run	1. Main switch open. 2. Fuse blown. Circuit breakers open. 3. Thermal overloads tripped. 4. Defective contactor or coil. 5. System shut down by safety devices. 6. No cooling required. 7. Liquid line solenoid will not open. 8. Motor electrical trouble 9. Loose wiring.	1. Close switch. 2. Check electrical circuits and motor winding for shorts or grounds. Investigate for possible overloading. Replace fuse or reset breakers after fault is corrected. 3. Overloads are auto. reset. Check unit closely when unit comes back on line. 4. Repair or replace. 5. Determine type and cause of shut-down and correct it before resetting safety switch. 6. None. Wait until unit calls for cooling. 7. Repair or replace coil. 8. Check motor for opens, short circuit, or burn out. 9. Check all wire junctions. Tighten all terminal screws.
Compressor noisy or vibrating	1. Flooding of refrigerant into crankcase. 2. Improper piping support on suction or liquid line. 3. Worn compressor	1. Check setting of expansion valve. 2. Relocate, add or remove hangers. 3. Replace.
High Discharge Pressure	1. Non-condensibles in system. 2. System overcharged with refrigerant. 3. Discharge shut off valve partially closed. 4. Seasontrol out of adjustment 5. Fan not running.	1. Purge the non-condensibles. 2. Remove excess. 3. Open valve. 4. Adjust Seasontrol valves. 5. Check belts and electrical circuit.
Low Discharge Pressure	1. Faulty condenser temperature regulation. 2. Suction shut-off valve partially closed. 3. Insufficient refrigerant in system. 4. Low suction pressure. 5. Compressor operating unloaded.	1. Check condenser control operation. 2. Open valve. 3. Check for leaks. Repair and add charge. 4. See Corrective Steps for low suction pressure below. 5. See Corrective Steps for failure of compressor to load up below.
High Suction Pressure	1. Excessive load. 2. Expansion valve overfeeding. 3. Compressor unloaders open.	1. Reduce load or add additional equipment. 2. Check remote bulb. Regulate superheat. 3. See Corrective Steps below for failure of compressor to load up.
Low Suction Pressure	1. Lack of refrigerant. 2. Evaporator dirty. 3. Clogged liquid line filter-drier. 4. Clogged suction line or compressor suction. gas strainers. 5. Expansion valve malfunctioning. 6. Condensing temperature too low. 7. Compressor will not unload.	1. Check for leaks. Repair and add charge. 2. Clean chemically. 3. Replace cartridge(s). 4. Clean strainers. 5. Check and reset for proper superheat. 6. Check means for regulating condensing temperature. 7. See Corrective Steps for failure of compressor to unload.
Compressor will not unload or load up.	1. Defective capacity control. 2. Pressurestat not set for application.	1. Replace. 2. Reset pressurestat setting to fit application.
Little or no oil pressure	1. Clogged suction oil strainer. 2. Excessive liquid in crankcase. 3. Oil pressure gauge defective. 4. Low oil pressure safety switch defective. 5. Worn oil pump. 6. Oil pump reversing gear stuck in wrong position. 7. Worn bearings. 8. Low oil level. 9. Loose fitting on oil lines. 10. Pump housing gasket leaks. 11. Flooding of refrigerant into crankcase.	1. Clean. 2. Check crankcase heater. Reset expansion valve for higher superheat. Check liquid line solenoid valve operation. 3. Repair or replace. Keep valve closed except when taking readings. 4. Replace. 5. Replace. 6. Reverse direction of compressor rotation. 7. Replace compressor. 8. Add oil. 9. Check and tighten system. 10. Replace gasket. 11. Adjust thermal expansion valve.
Compressor loses oil	1. Lack of refrigerant. 2. Excessive compression ring blow-by.	1. Check for leaks and repair Add refrigerant. 2. Replace compressor.
Motor overload relays open or blown fuses	1. Low voltage during high load conditions. 2. Defective or grounded wiring in motor. 3. Loose power wiring. 4. High condensing temperature. 5. Power line fault causing unbalanced voltage. 6. High ambient temperature around the overload relay. 7. Failure of second starter to pull in on part-winding start systems.	1. Check supply voltage for excessive line drip. 2. Replace compressor - motor. 3. Check all connections and tighten. 4. See Corrective Steps for high discharge pressure. 5. Check supply voltage. Notify power compnay. Do not start until fault is corrected. 6. Provide ventilation to reduce heat. 7. Repair or replace starter or time delay mechanism.
Compressor thermal protector switch open.	1. Operating beyond design conditions. 2. Discharge valve partially shut. 3. Blown valve plate gasket.	1. Add facilities so that conditions are within allowable limits. 2. Open valve. 3. Replace gasket.

ITEM 18

BROAN BATHROOM FANS

Supplied by: Morgan & Kirkman Associates, Inc.
P.O. Box 172
Fayetville, N.C. 28302
PH: (919) 484-5796

Parts can be furnished by
above supplier.

Installed by: Ramsey Air Conditioning, Inc.
P.O. Box 1333
Jacksonville, N.C. 28540
PH: (919) 455-0414

BROAN®
A NORTEK COMPANY

PHONE (414) 673-4340 D-U-N-S 606-9330

Fan Mdl. # 689

MAINTENANCE & OPERATING INSTRUCTIONS LOW ZONE FANS

All Broan ceiling fans may be operated on 115/1/60 circuit. It may be operated for continuous duty by being wired direct to electrical panel by a wall mounted 115/1/60 toggle switch or with an electric time switch. Your Broan fan should be serviced annually by removing the ceiling grille, and cleaning the centrifugal fan blades to remove lint. In some atmosphere, it may be necessary to remove fan wheel and clean with a grease dissolver which is available in most department stores. Should you have any questions regarding your Broan products, please contact the nearest Broan distributor.

BROAN®

CEILING/WALL VENTILATING FANS

MODEL 670 671 675

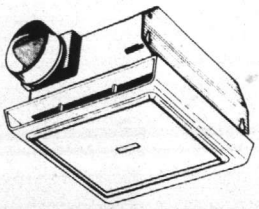

MODEL 688 689

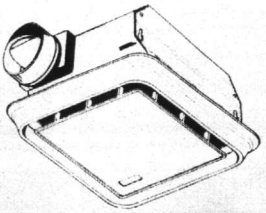

READ AND SAVE THESE INSTRUCTIONS

1. ALL ELECTRICAL WORK MUST BE DONE IN ACCORDANCE WITH LOCAL AND/OR NATIONAL ELECTRICAL CODE AS APPLICABLE **FOR SAFETY, THIS PRODUCT MUST BE GROUNDED.** IF YOU ARE UNFAMILIAR WITH METHODS OF INSTALLING ELECTRICAL WIRING, SECURE THE SERVICES OF A QUAILIFIED ELECTRICIAN.
2. TURN OFF POWER AT SERVICE ENTRANCE BEFORE INSTALLING, WIRING OR SERVICING THIS PRODUCT.
3. **CAUTION: Always vent this product to the outside - NOT into spaces within walls or ceilings, attics, crawl spaces, garages, etc.**
4. To avoid motor bearing damage and noisy and/or unbalanced impellers, keep drywall spray, construction dust, etc. off power unit.
5. Fireplaces, gas furnaces, water heaters and the like, require proper flow of combustion air and exhaust. Make sure this flow is not altered when using any exhaust fan.
6. Please read specification label on product for further information and requirements.

TOOLS AND MATERIALS REQUIRED

- ☐ Straight-blade screwdriver
- ☐ Hammer
- ☐ 4 - nails
- ☐ Wall control
- ☐ 3" round duct and elbows, (as needed)
- ☐ Roof or wall cap
- ☐ Duct tape
- ☐ Electrical supplies of type to comply with local codes

PREPARE THE FAN

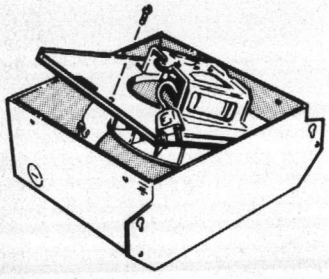

1. Unplug the motor and remove the sheet metal screw next to the receptacle. Lift the fan assembly out of the housing.

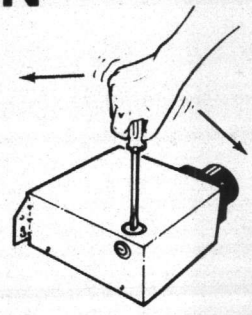

2. Remove the electrical knockout on the top or the side of the housing. Insert screwdriver into slot in knockout and bend knockout back and forth to break tabs.

INSTALL THE FAN

3. Choose the location for your fan. For best possible performance, use the shortest possible duct run and a minimum number elbows.

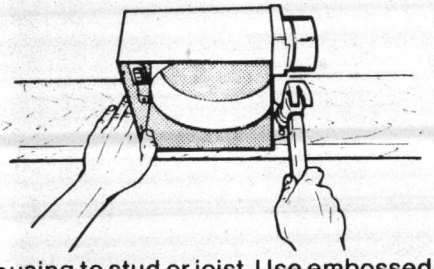

4. Nail housing to stud or joist. Use embossed measuring guides to position housing for proper wall or ceiling thickness. IMPORTANT: MAKE SURE HOUSING IS FLUSH WITH FINISHED CEILING OR WALL. To ensure a solid, quiet installation, make sure nail heads are small enough to fit through larger opening in keyholes, yet large enough to hold unit securely in smaller keyholes. Use four nails.

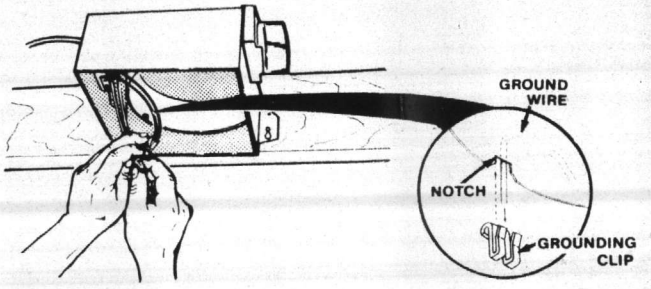

5. Turn off electrical power at service entrance and bring power cable in using appropriate connector. Wire black to black, white to white. Insert ground wire into grounding clip and secure to scroll band notch.

   CAUTION: DO NOT ALLOW WIRES TO HANG OVER EDGE OF SCROLL BAND. Push all wiring up into corner of unit. Wire left hanging over this edge will become pinched or severed when fan assembly is installed. Electrical shock may result.

6. Install the 3" round duct onto the damper/duct connector. Tape the joint and extend the ducting to a wall cap on roof cap. Make sure that the damper operates freely. Ceiling or wall can now be finished.
7. Replace the fan assembly removed in Step 1. Secure with sheet metal screw and plug in motor.

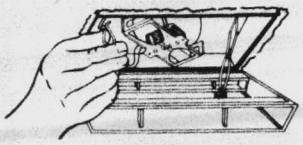

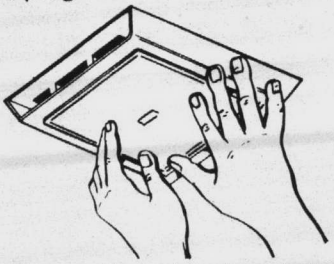

8. Squeeze grille springs together and insert springs into slots in fan assembly. Push grille up against ceiling.

TURN OFF ELECTRICAL HOUSE CURRENT AT SERVICE ENTRANCE BEFORE WIRING

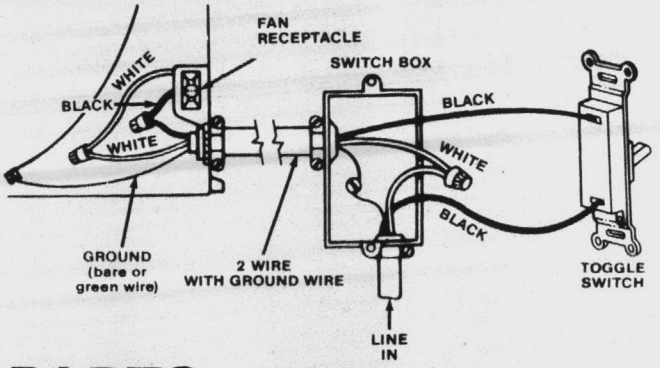

SERVICE PARTS

KEY NO.	PART NO.	DESCRIPTION
1	97006158	Grille (670, 671, 675)
2	97007357	Grille (688 & 689)
3	99080216	Motor (688)
	99080217	Motor (689)
	99080165	Motor (670)
	99080166	Motor (671)
4	99080095	Motor (675)
5	99110446	Blower Wheel (670 & 671)
6	99110379	Blower Wheel (688 & 689)
7	99020116	Blower Wheel (675)
8	97006967	Housing
9	99270011	Receptacle
10	97003922	Damper/Duct Connector
11	97006987	Motor Plate
12	99170245	8B x ⅜ Slotted Head Screw (2 req.)
13	99260466	Nut (2 req.)
14	99390015	Grounding Clip

Always order by "Part No." - Never by "Key No."

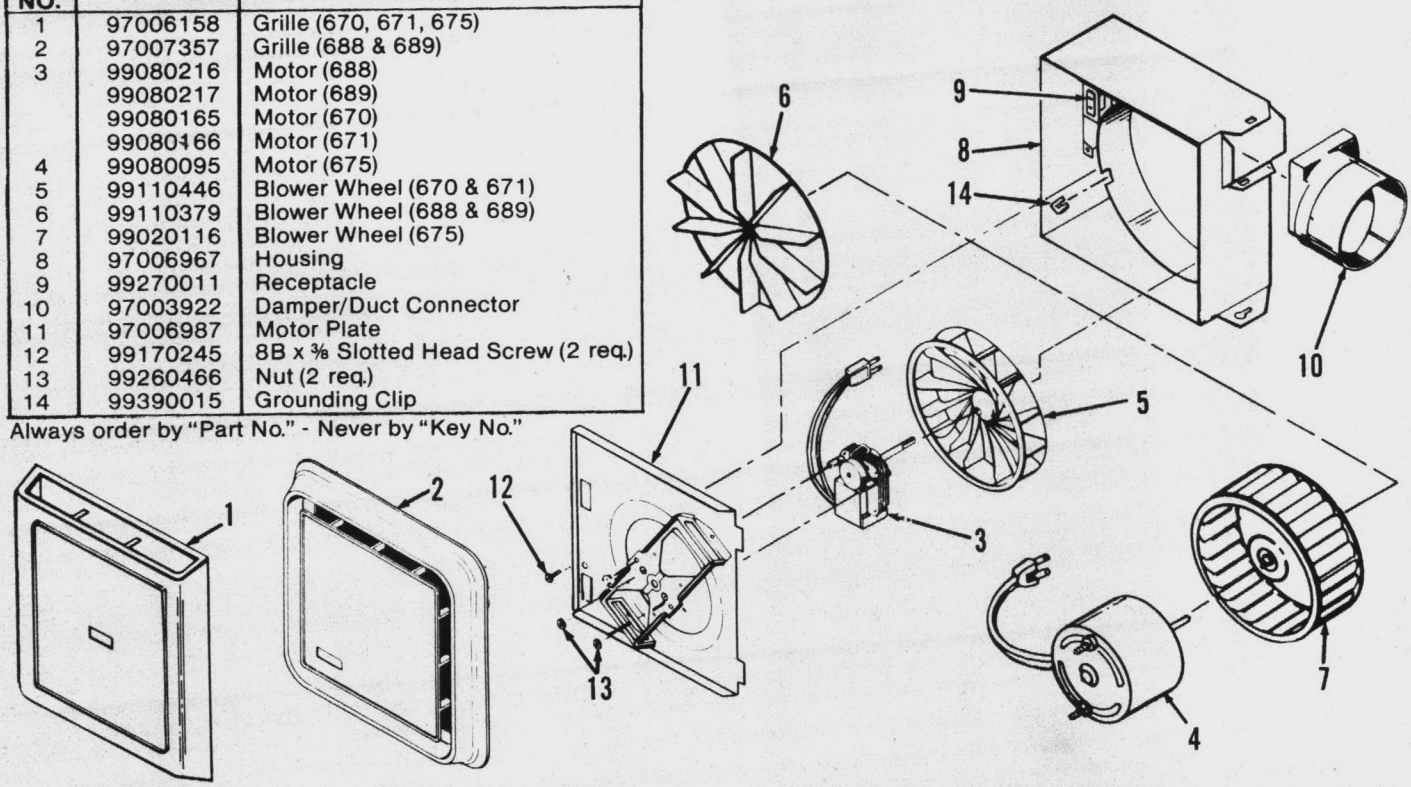

BROAN ONE YEAR LIMITED WARRANTY

Broan Mfg. Co., Inc. warrants that its products will be free from defects in materials or workmanship for a period of one year from the date of original purchase. During this one-year period, Broan will repair or replace, at its option, any product or part which is found to be defective under normal use and service without charge. Broan's obligation to repair or replace, at Broan's option, shall be the purchaser's sole and exclusive remedy under this warranty.

THIS WARRANTY DOES NOT EXTEND TO FLUORESCENT LAMP STARTERS AND TUBES, FILTERS, DUCTS, ROOF CAPS, WALL CAPS AND OTHER ACCESSORIES FOR DUCTING. This warranty does not include normal maintenance and service and does not apply to any products or parts which have been subject to misuse, negligence, accident, improper maintenance or repair by others than Broan, faulty installation or installation contrary to recommended installation instructions.

THERE IS NO OTHER EXPRESS WARRANTY. BROAN HEREBY DISCLAIMS ANY AND ALL IMPLIED WARRANTIES, INCLUDING BUT NOT LIMITED TO, THOSE OF MERCHANTABILITY AND FITNESS FOR A PARTICULAR PURPOSE TO THE EXTENT PERMITTED BY LAW. The duration of any implied warranty which cannot be disclaimed is limited to the one-year period as specified in the express warranty. Some states do not allow limitation on how long an implied warranty lasts, so the above limitation may not apply to you. BROAN SHALL NOT BE LIABLE FOR INCIDENTAL, CONSEQUENTIAL OR SPECIAL DAMAGES ARISING OUT OF OR IN CONNECTION WITH PRODUCT USE OR PERFORMANCE EXCEPT AS MAY OTHERWISE BE ACCORDED BY LAW. Some states do not allow the exclusion of incidental or consequential damages, so the above exclusion or limitation may not apply to you. This warranty gives you specific legal rights, and you may also have other rights which vary from state to state. This warranty supersedes all prior warranties.

For service, notify Broan Mfg. Co., Inc., Hartford, Wisconsin 53027 (Telephone: 414-673-4340) or, in California, notify Broan Mfg. Co., Inc., La Mirada, California 90638 (Telephone: 213-926-0595), giving the model number, part identification and nature of any defect in the product or part. At the time of requesting warranty service, evidence of the original purchase date must be presented.

BROAN MFG. CO., INC.
926 West State Street
Hartford, WI 53027

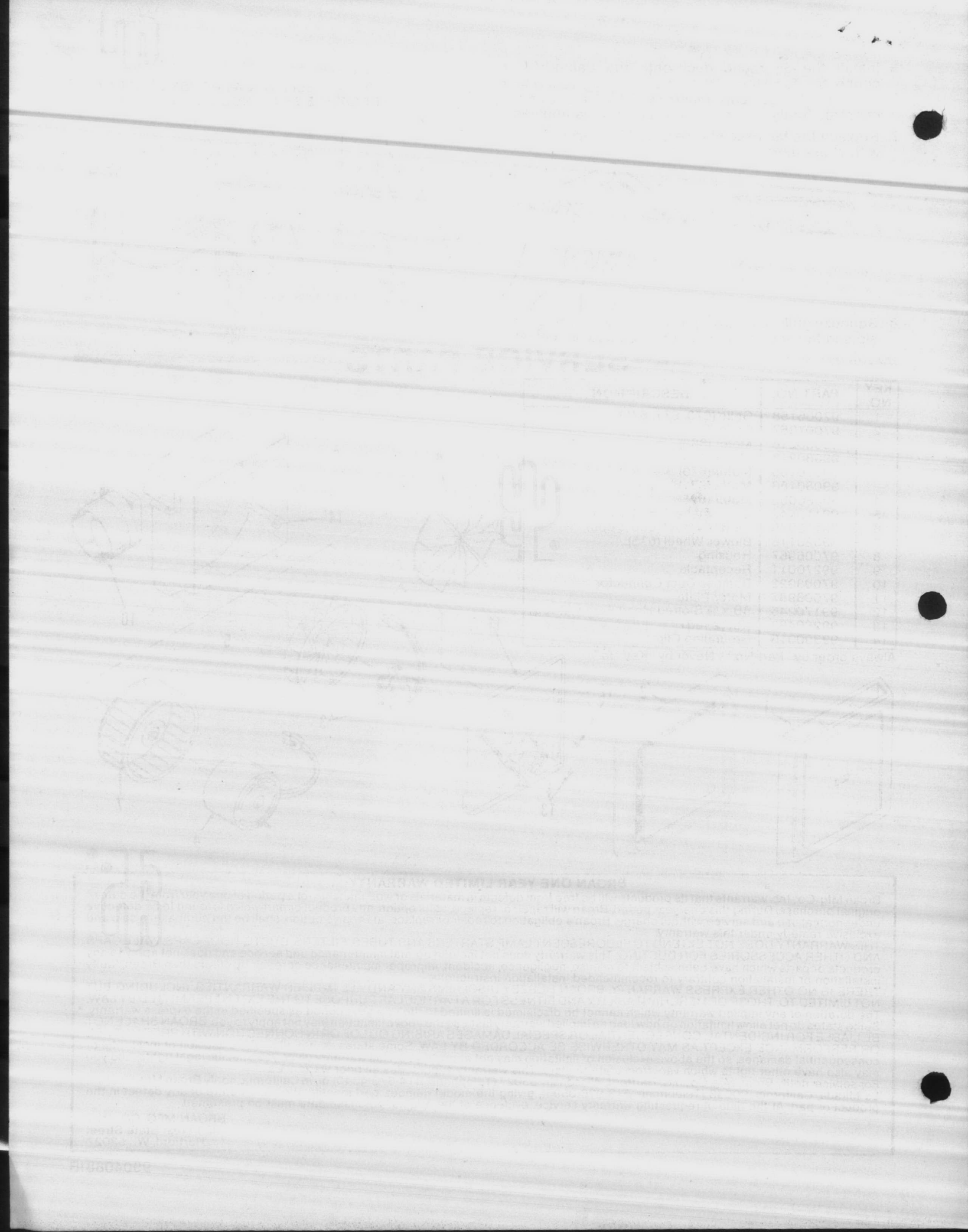

INSTALLATION INSTRUCTIONS BATHROOM VENTILATOR

HOUSING

Remove motor assembly before installing unit.
(Store assembly and grille in carton until needed.)

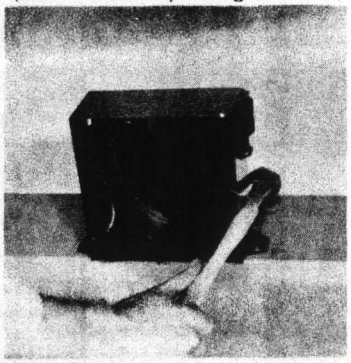

1. Nail housing to stud or joist. Use embossed measuring guides to position housing for proper wall or ceiling thickness. IMPORTANT: MAKE SURE HOUSING IS FLUSH WITH FINISHED CEILING OR WALL. USE FOUR NAILS TO ASSURE SOLID, QUIET INSTALLATION.

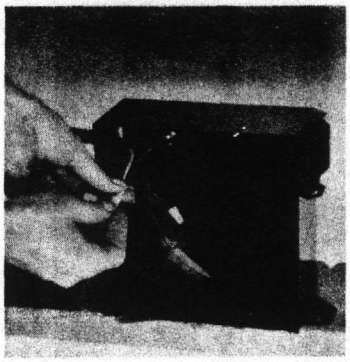

2. Remove knockout and bring power cable into position. Wire black to black and white to white. Insert ground into bottom of grounding clip and secure to scroll band notch.

3. Snap 3" damper/duct connector on to housing making sure tabs on connector lock in housing slots. (Top of duct connector will be flush with top of housing.)

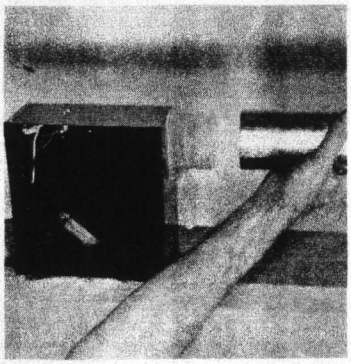

4. Install 3" round duct onto damper/duct connector, tape and extend to wall cap, roof cap or attic. (To insure damper operation, make sure that duct is relatively round. Seam of duct should be at top or bottom.)

FINISH

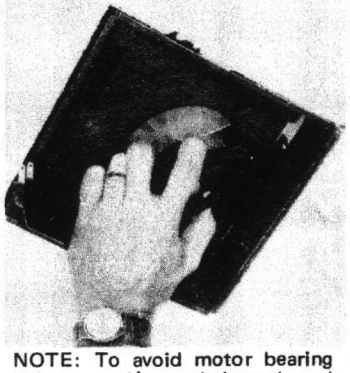

NOTE: To avoid motor bearing damage and/or unbalanced and noisy impellers, keep drywall spray, construction dust, etc. off power unit.

5. Remove screw from receptacle bracket and slide motor assembly into the housing with the retaining tabs in the slot and discharge outlet.

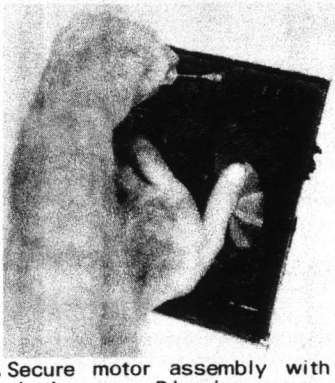

6. Secure motor assembly with single screw. Plug in.

GRILLE

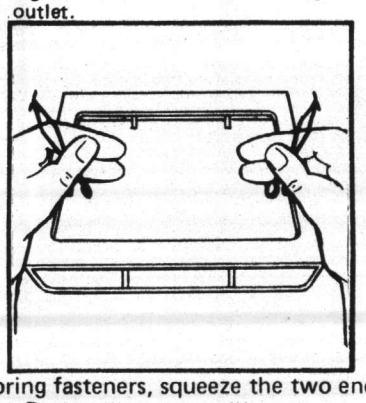

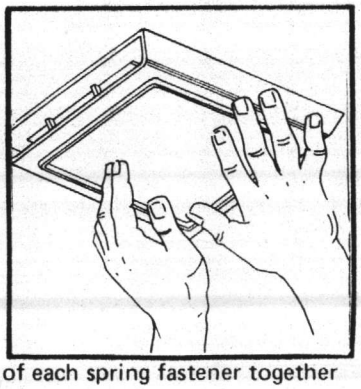

7. To install grilles equipped with spring fasteners, squeeze the two ends of each spring fastener together and insert each into slots provided. Push grille up to ceiling.

BROAN ONE YEAR LIMITED WARRANTY

Broan Manufacturing warrants that its products will be free from defects in materials or workmanship for a period of one year from the date of original purchase. During this one-year period, Broan will repair or replace, at its option, any product or part which is found to be defective under normal use and service without charge. Broan's obligation to repair or replace, at Broan's option, shall be the purchaser's sole and exclusive remedy under this warranty.

THIS WARRANTY DOES NOT EXTEND TO CHARCOAL FILTERS, DUCTS, ROOF CAPS, WALL CAPS AND OTHER ACCESSORIES FOR DUCTING. This warranty does not include normal maintenance and service and does not apply to any products or parts which have been subject to misuse, negligence, accident, improper maintenance or repair by others than Broan, faulty installation or installation contrary to recommended installation instructions.

THERE IS NO OTHER EXPRESS WARRANTY. BROAN HEREBY DISCLAIMS ANY AND ALL IMPLIED WARRANTIES, INCLUDING BUT NOT LIMITED TO, THOSE OF MERCHANTABILITY AND FITNESS FOR A PARTICULAR PURPOSE TO THE EXTENT PERMITTED BY LAW. The duration of any implied warranty which cannot be disclaimed is limited to the one-year period as specified in the express warranty. Some states do not allow limitation on how long an implied warranty lasts, so the above limitation may not apply to you. BROAN SHALL NOT BE LIABLE FOR INCIDENTAL, CONSEQUENTIAL OR SPECIAL DAMAGES ARISING OUT OF OR IN CONNECTION WITH PRODUCT USE OR PERFORMANCE EXCEPT AS MAY OTHERWISE BE ACCORDED BY LAW. Some states do not allow the exclusion of incidental or consequential damages, so the above exclusion or limitation may not apply to you. This warranty gives you specific legal rights, and you may also have other rights which vary from state to state. This warranty supersedes all prior warranties.

For service, notify Broan Manufacturing, Hartford, Wisconsin 53027 (Telephone: 414-673-4340) or, in California, notify Broan Manufacturing, Cerritos, California 90701 (Telephone: 213-926-0595), giving the model number, part identification and nature of any defect in the product or part. At the time of requesting warranty service, evidence of the original purchase date must be presented.

BROAN MANUFACTURING COMPANY, INC.
926 West State Street
Hartford, WI 53027

ITEM 19

SUNROC DRINKING FOUNTAINS

Supplied by: Ferguson Enterprises, Inc.
P.O. Box 3037
Wilmington, N.C. 28406
PH: (919) 343-1510

Parts may be furnished by
above supplier.

Installed by: Ramsey Air Conditioning, Inc.
P.O. Box 1333
Jacksonville, N.C. 28540
PH: (919) 455-0414

PLEASE LEAVE THIS WARRANTY WITH OWNER.

SUNROC WATER COOLER

LIMITED WARRANTY

SUNROC CORPORATION (SUNROC) warrants the water cooler when installed in accordance with the installation instructions, against defects in material and workmanship as follows:

1. One (1) year from the date of installation or 18 months from date of shipment, whichever occurs first, SUNROC will repair or replace any defective part which, upon SUNROC'S sole determination, is a result of defective materials or workmanship.
2. In addition, SUNROC will, for a further 4 years, warrant the complete hermetically sealed refrigeration system which includes the compressor, evaporating coil, filter dryer, and condensing coil. This does not cover the cooling coil, thermostat, fan motor, fan, relay, overload or capacitors.

This warranty does not cover any damage due to accident, misuse, abuse, negligence, or any part of the water system if they have become fouled due to liming, dirt, unsatisfactory water conditions, or faulty plumbing.

Adjustments to the water stream and temperature, field service calls to replace or install parts, and unauthorized service work cannot be claimed under this warranty. Finish deterioration due to normal use or exposure is not covered by this warranty.

To obtain warranty service, you must call either the factory or an authorized service agent. For the nearest authorized service center or Sunroc factory service, call 215-459-1100 and ask for Service Manager.

This warranty is valid in contiguous United States only.

OWNER'S OBLIGATION

To pay for services not covered by this warranty such as minor adjustments to flow and temperature and to diagnose for faults.

To prepay the freight to Sunroc or authorized service center for any part or cooler returned under this warranty.

To provide the cooler serial number when making claims as age can only be determined by this number.

MANUFACTURER'S OBLIGATION

SUNROC's obligation under this warranty is limited to repairing or replacing any part of the water cooler which, upon its examination, is found to be defective due to workmanship or material. Claims will not be accepted if serial nameplate is mutilated or removed.

The warranty includes freight by the most economical means to the nearest service center, if after examination, the fault is a result of workmanship or materials. Do not send coolers or parts without authorization from Sunroc or its agents. The cooler should only be returned to the factory or service center if one of the following parts fail.

1. Any part of the sealed refrigeration system
2. Cooling coil assembly
3. Precooler assembly

A complete water cooler should not be returned if water leaks occur at one of the top fittings.

Repair or replacement as provided under this warranty is the exclusive remedy of the user. SUNROC shall not be liable for any incidental or consequential damages for breach of any express or implied warranty on this product. Except to the extent prohibited by applicable law, any implied warranty of merchantability or fitness for a particular purpose on this product is limited in duration to the duration of this warranty.

Some states do not allow the exclusion or limitation of incidental or consequential damages, or allow limitations on how long an implied warranty lasts, so the above limitations or exclusion may not apply to you. This warranty gives you specific legal rights, and you may also have other rights which vary from state to state.

SUNROC CORPORATION
Rt. 452, Glen Riddle, Pennsylvania 19037

OML-283 Revised 1/15/83

This pamphlet should be read before installation of the cooler or by anyone who works on the cooler.

INSTALLATION AND MAINTENANCE INSTRUCTION

INSTALLER: Please leave this pamphlet with customer

I. INTRODUCTION

Every cooler is checked and run before leaving the factory to make sure it works cor--ectly. All controls, capillary lines, valves, bubblers, and other equipment are set for correct operation. The cooler, when it meets safety and quality performance standards, is boxed and marked for shipment. Follow the instructions provided below to install the unit.

II. INSTALLATION

A. Main Drain - A drain fitting is provided on every cooler. Do not reduce the size of the drain line. The drain should be connected first and all joints must be watertight, and a drain trap must be installed according to good plumbing practice and regulations. See back of this sheet for location and size.

B. Water Supply - Connect the water supply to the inlet fitting provided. For location, see back of this sheet. For models with lowside drain, do not connect water supply to lowside drain fitting as the coil will freeze and split. Before finally connecting flush the supply line out until clean. Warranty claims will not be accepted if the valve or coil have been blocked with foreign matter of any type. If a clear water supply cannot be guaranteed, it is recommended that a Strainer, Part No. A016802, or an SF7 Water Filter available from Sunroc be installed in the supply line.

C. Electrical Connections

1. Check first to make sure electrical (supply) voltage is the same as shown on the cooler serial nameplate. If not the same, do not connect to the electrical supply as a major damage could result.
2. The cooler must be protectively grounded. Make sure the supply connection is provided with a protective ground wire. Do not use the cooler if the protective ground wire is not connected.
3. The back of this sheet shows the location and type of electrical connection for the cooler

D. Fan Assembly- After installation of unit fan blade should turn freely.

III. MAINTENANCE

A. Cleaning - For appearance and hygiene, it is recommended that the top and cabinet be cleaned regularly with a mild cleaning agent.

B. Keep the air flow vents clean and free from paper, debris, and dust to assure good operation.

C. Water flow adjustments can be made to the bubbler cartridge. See back of sheet for location and cartridge detail. Note that adjustments to this cartridge are not covered by warranty.

D. Storage of cooler - If location of cooler is such that it is subjected to freezing temperatures, care should be taken to completely drain the drinking water storage chamber. Water cooler models must also have the water condenser coils completely drained.

IV. SAFETY PRECAUTIONS

A. Do not allow water to come into contact with live electrical wires as short circuiting and shocks can occur.

B. WARNING - Beware of rotating fans when covers are removed.

C. Care should be taken not to puncture refrigeration system lines. Some lines contain gas under high pressure.

D. Install cooler to conform with all applicable codes including the National Electrical Code.

The Warranty provided with the cooler tells what to do in the unlikely event of a failure of your cooler. Adjustments to flow and water temperature are not covered by the warranty. For detailed information concerning the maintenance and repair of your water cooler, contact the factory and request an Instruction Manual.

COMPACT WALL HUNG TYPE

4, 8 AND 13

ROUGHING-IN

NOTES:
1. DIMENSIONS IN PARENTHESIS ARE IN MILLIMETERS
2. ALLOW 4 IN CLEARANCE ON BOTH SIDES OF THE COOLER FOR AIR CIRCULATION
3. COOLER SUPPLIED WITH POWER CORD AND THREE PRONG PLUG.

THERMOSTAT

PART NO. AO16241

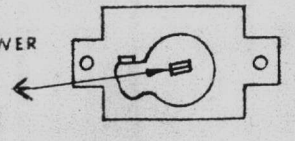

TURN CLOCKWISE TO LOWER WATER TEMPERATURE
TURN COUNTERCLOCKWISE TO TURN COOLER OFF

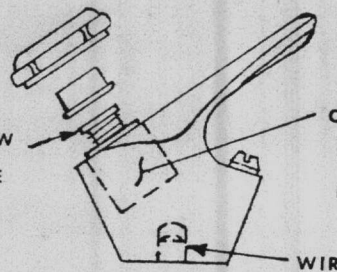

HAND OPERATED BUBBLER

PART NO. B153425

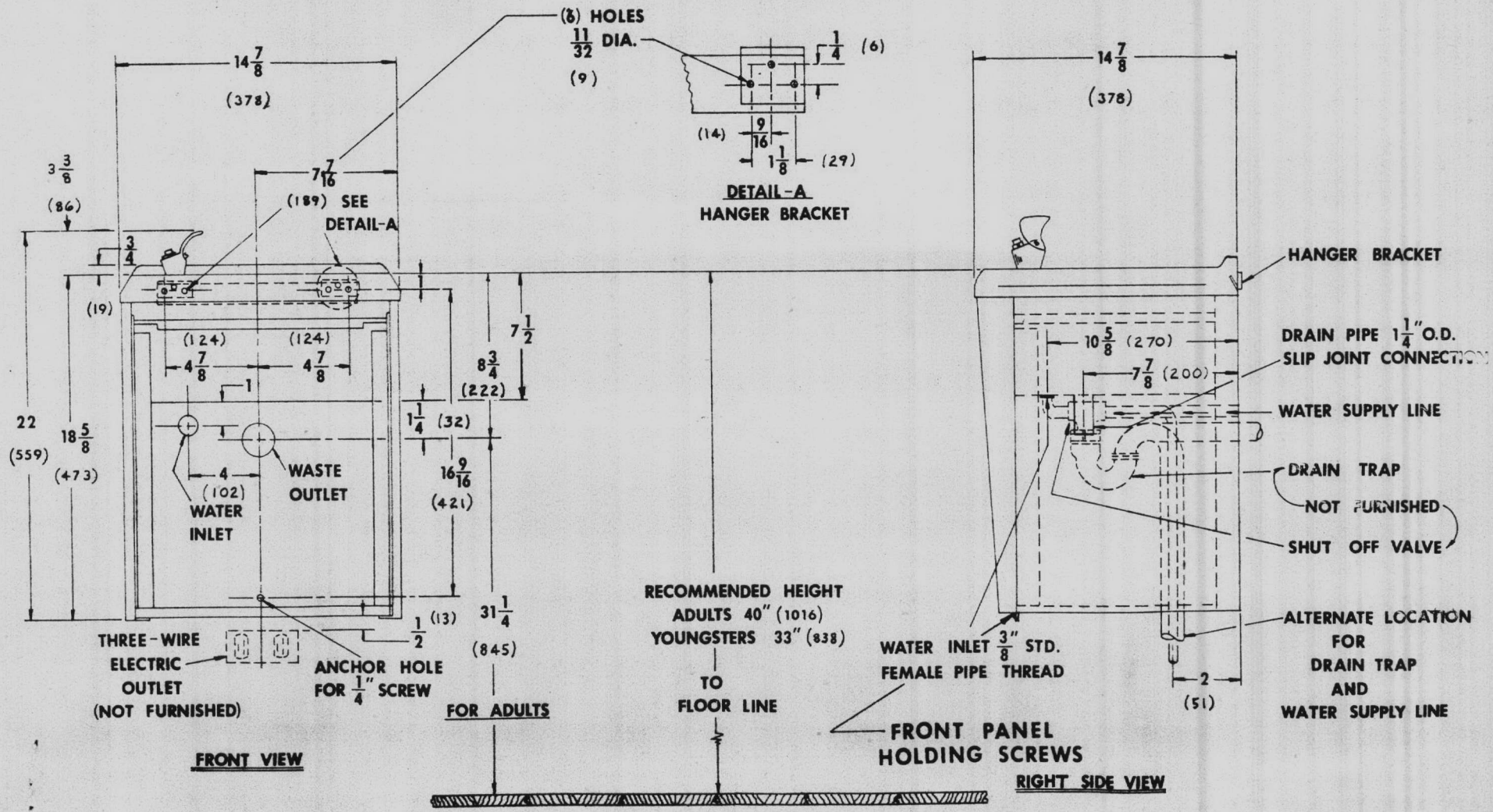

NOTE: SHOULD A REPLACEMENT PARTS LIST BE REQUIRED CONTACT THE FACTORY. BE SURE TO GIVE THE MODEL AND SERIAL NUMBER OF THE COOLER.

ITEM 20

GREENHECK EXHAUST FANS

Supplied by: Hoffman & Hoffman, Inc.
P.O. Box 77258
Greensboro, N.C. 27417
PH: 1-800-632-0432

Parts can be furnished by above supplier.

Installed by: Ramsey Air Conditioning, Inc.
P.O. Box 1333
Jacksonville, N.C. 28540
PH: (919) 455-0414

JOB: Unaccompanied Enlisted Personnel Housing
Camp Lejeune, NC

CONTRACTOR: Ramsey Air Conditioning, Inc.
ENGINEER: J. N. Pease Associates
ARCHITECT: J. N. Pease Associates

DRWG. H&H 22-1116R
SHEET 3 OF 7
DATE: 4/27/84

MARK	MODEL	NO. REQ'D	MOTOR INFORMATION						CFM	SP	FAN RPM	T.S.	BHP	REMARKS
			H.P.	R.P.M.	VOLTS	CYC	PH	FRAME						
EF-4	GB-24-5	1	1/2	1800	460	60	3	ODP	4350	.250	556	3570	0.47	BD, DSW, birdscreen and variable pitch motor pulley.
EF-1	GB10-6	5	1/6	1750	115	60	1	ODP	420	.125	671	1954	.017	BD, DS, UL705 Thermal Overload Protection

Spec: 05-82-2244
15801-10
PP 3.6.2

MODEL GB

BELT DRIVE CENTRIFUGAL ROOF EXHAUSTERS

DIMENSIONAL DATA

MODEL	A	B	C	D	Damper	Roof Opening
GB-10	22	23 3/4	23 5/8	4 7/16	12	14 1/2
GB-14	26	23 3/4	27 1/2	3 13/16	16	18 1/2
GB-18	30	28	34 3/16	5 9/16	18	20 1/2
GB-21	30	28	34 3/16	5 9/16	18	20 1/2
GB-24	34	31 7/16	40 3/4	5 3/4	24	26 1/2
GB-30	40	35 15/16	48	8 5/16	30	32 1/2
GB-36	46	38 1/2	56 11/16	8 7/8	36	38 1/2
GB-42	52	44 1/16	65 5/32	9 3/4	42	44 1/2
GB-48	58	47 1/4	72 1/8	11 1/4	48	50 1/2
GB-54	64	50 3/4	82 3/4	14 1/2	54	56 1/2

DIMENSION A - GIVEN IS THE INSIDE DIMENSION OF THE CURB CAP. THE ROOF CURB SHOULD BE 1½" LESS THAN THE CURB CAP TO ALLOW FOR CAULKING AND FLASHING.

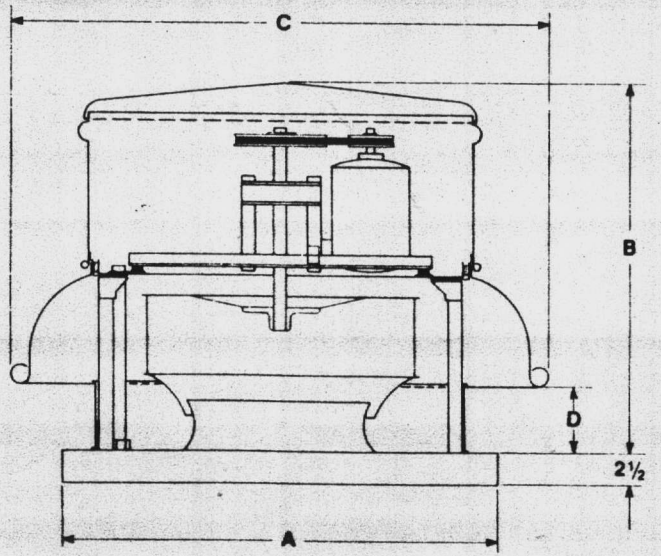

MOTOR & DRIVE OUT OF AIRSTREAM. ALUMINUM HOOD, SHROUD, CURB CAP.

ABBREVIATIONS FOR SPECIAL FEATURES

- D. SW. - DISCONNECT SWITCH
- B. D. - BACKDRAFT DAMPER
- B. D. M. - BACKDRAFT DAMPER MOTORIZED
- EX. C. - EXTENDED CURB
- M. S. W. - MANUAL START SWITCH
- PR. C. - PREFAB CURB

Greenheck Fan Corporation certifies that the GB Models shown herein are licensed to bear the AMCA Seal. The ratings shown are based on tests made in accordance with AMCA Standard 210 and AMCA Standard 300 and comply with the requirements of the AMCA Certified Ratings program.

The sound ratings shown were obtained in accordance with AMCA Standard 300, test setup No. 4. Loudness values in Sones at a distance of 5 feet were calculated in accordance with AMCA Standard 301. The AMCA Certified Ratings Sound Seal applies to Sone Ratings only.

Par 2.2.1
C. Exhaust Fans.
Par 3.6.2

Greenheck
Fan Corporation
P.O. Box 128 • Schofield, WI 54476-0128
Ph: 715/359-6171
Moving air around the world

GREENHECK NEWEX SERIES

SB

Centrifugal Roof Exhauster
Belt Driven

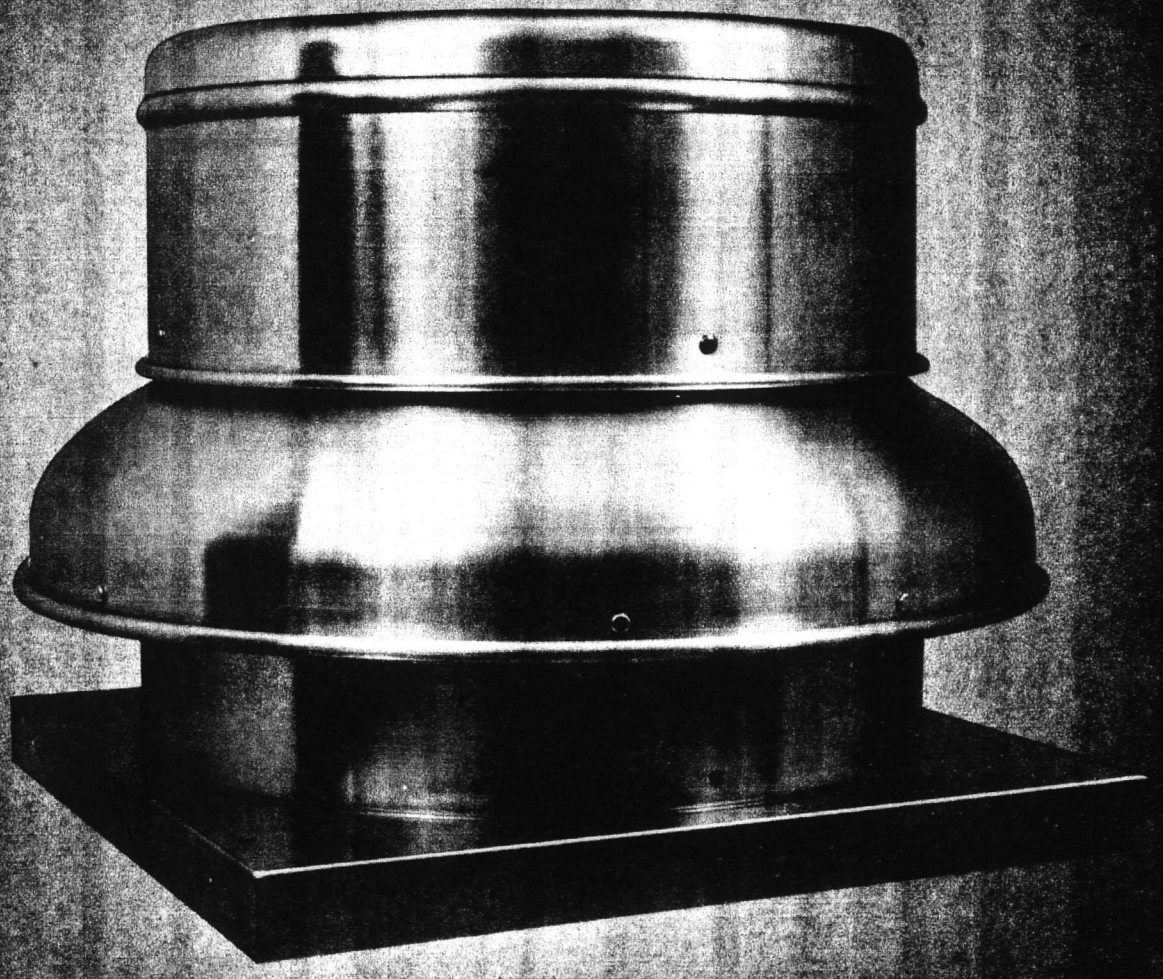

CENTRIFUGAL ROOF EXHAUSTER

BELT DRIVEN

MODEL GB

Model GB is a centrifugal, belt driven roof exhauster designed for applications which demand a quiet and efficient air moving device. This series of fans has been highly engineered and thoroughly tested to deliver years of dependable service with minimal maintenance. Strict attention to quality and performance has led to a comprehensive line of roof exhausters.

High efficiencies have been achieved through the use of a centrifugal blower style wheel and a matched inlet venturi. This combination has resulted in lower speeds and reduced sound levels which provide the user with a product that will operate longer with lower maintenance cost. A well proportioned housing with a carefully designed support structure provide for an extremely rigid construction without obstructing the air passages.

Each size has been thoroughy tested in Greenheck's modern research and development facility to assure complete and accurate performance ratings. These units have been tested in accordance with the latest AMCA standards and licensed to bear the AMCA Certified Ratings Seal for both air and sound performance.

Nine sizes are available ranging from 10 to 48 inches with capacities from 800 to 25,000 CFM. Additional construction features are described below.

Model GB is complemented by a complete line of accessories to match this unit to your application, reduce installation time and minimize installation costs.

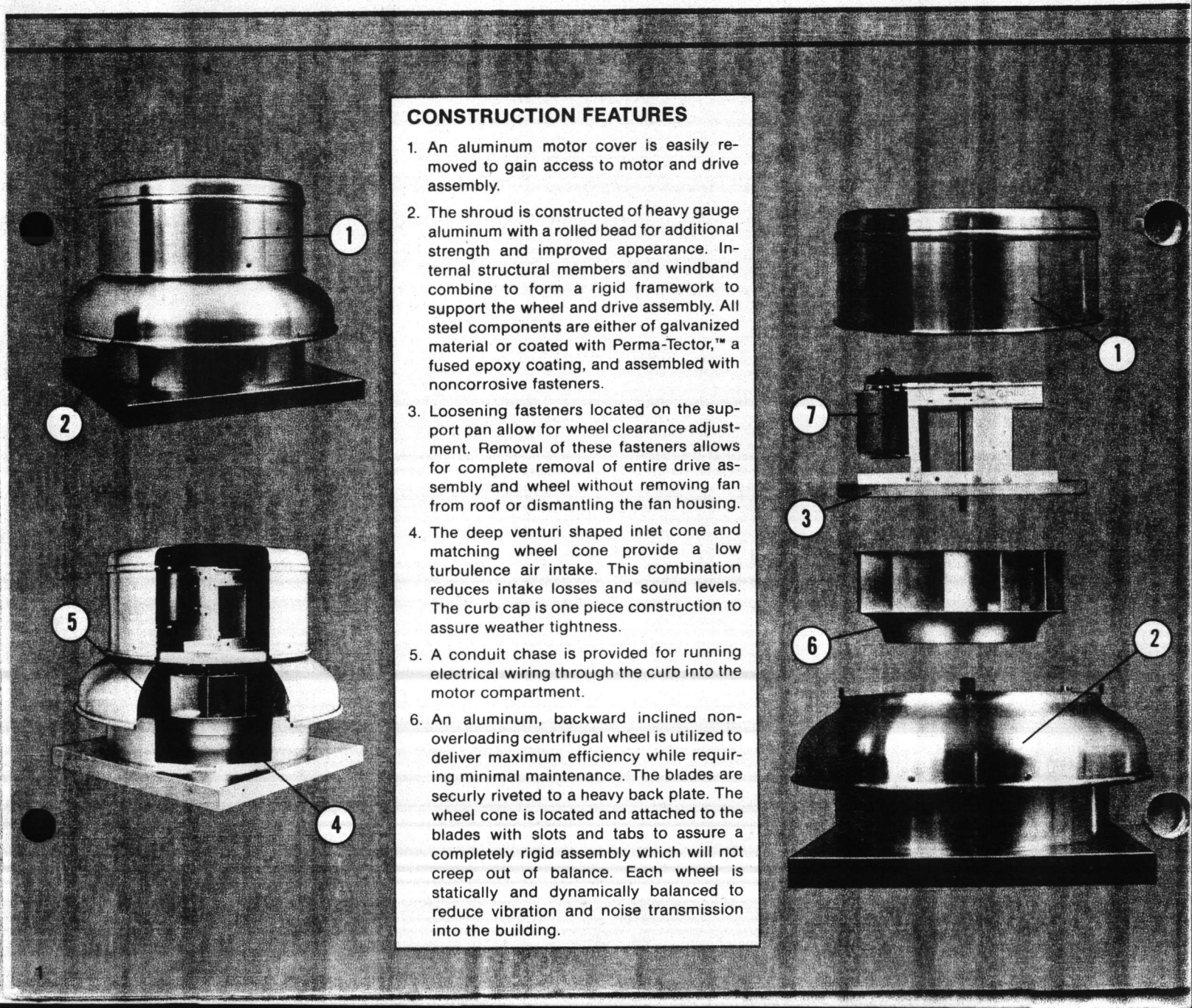

CONSTRUCTION FEATURES

1. An aluminum motor cover is easily removed to gain access to motor and drive assembly.
2. The shroud is constructed of heavy gauge aluminum with a rolled bead for additional strength and improved appearance. Internal structural members and windband combine to form a rigid framework to support the wheel and drive assembly. All steel components are either of galvanized material or coated with Perma-Tector,™ a fused epoxy coating, and assembled with noncorrosive fasteners.
3. Loosening fasteners located on the support pan allow for wheel clearance adjustment. Removal of these fasteners allows for complete removal of entire drive assembly and wheel without removing fan from roof or dismantling the fan housing.
4. The deep venturi shaped inlet cone and matching wheel cone provide a low turbulence air intake. This combination reduces intake losses and sound levels. The curb cap is one piece construction to assure weather tightness.
5. A conduit chase is provided for running electrical wiring through the curb into the motor compartment.
6. An aluminum, backward inclined non-overloading centrifugal wheel is utilized to deliver maximum efficiency while requiring minimal maintenance. The blades are securly riveted to a heavy back plate. The wheel cone is located and attached to the blades with slots and tabs to assure a completely rigid assembly which will not creep out of balance. Each wheel is statically and dynamically balanced to reduce vibration and noise transmission into the building.

NEWEX

Greenheck's NEWEX (air exhauster) series represents a new generation of spun aluminum fans developed to exceed the current engineering specifications which demand rugged, economical and efficient air moving devices. The NEWEX series and its concepts span Greenheck's entire line of spun fans (upblast, roof and sidewall).

Design concepts and unique manufacturing methods have been optimized to develop an exceptional series of exhausters. Innovative concepts which utilize material and manufacturing methods more efficiently enhance the performance, appearance and quality of the finished product. All factors which benefit the architect, specifying engineer, contractor and end user.

Appearance, quality, performance and Greenheck make the NEWEX series an ideal selection for your next application.

GREENHECK FAN

CORPORATION

Schofield, Wisconsin 54476

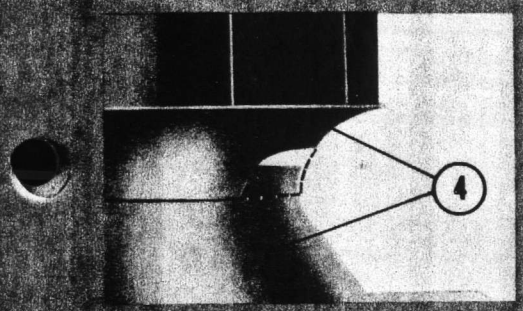

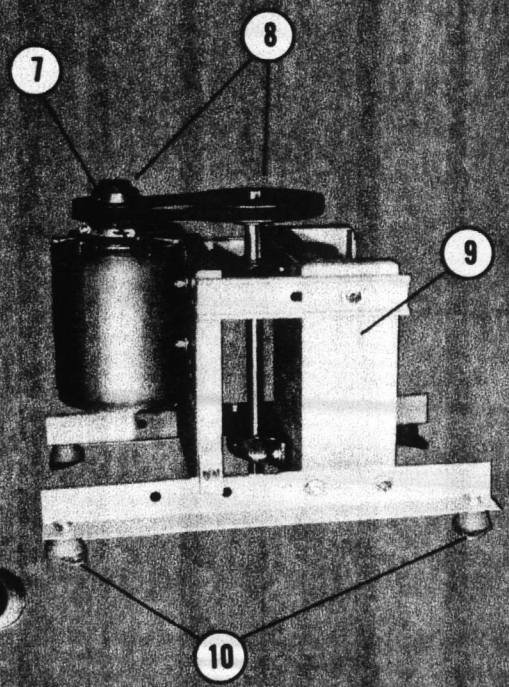

7. Permanently lubricated, sealed ball bearing motors are used to provide years of trouble-free operation with minimal maintenance.
8. Drives are sized for a minimum of 165% of driven horsepower. Machined cast iron motor pulleys are factory set to the required RPM and adjustable for final system balancing. Belts are the non-static, oil resistant type. Ground and polished steel drive shafts and permanently lubricated sealed ball bearing pillow blocks assure long trouble-free operation.
9. The drive frame, bearing and motor plates are constructed from heavy gauge steel. Belt adjustment is accomplished by loosening easily accessible fasteners, sliding motor to desired position, and retightening fasteners.
10. The entire drive assembly and wheel are supported by vibration isolators.
11. Motor is located out of the exhaust airstream. This compartment is ventilated with fresh air to keep motor cool and provide years of dependable service. This cooling air is drawn through the opening between the hood and shroud, over the motor and discharged through the support pan.

amca CERTIFIED RATINGS — AIR and SOUND PERFORMANCE — AIR MOVEMENT AND CONTROL ASSOCIATION, INC.

Greenheck Fan Corporation certifies that the GB Models shown herein are licensed to bear the AMCA Seal. The ratings shown are based on tests made in accordance with AMCA Standard 210 and AMCA Standard 300 and comply with the requirements of the AMCA Certified Ratings program.

The sound ratings shown were obtained in accordance with AMCA Standard 300, test setup No. 4. Loudness values in Sones at a distance of 5 feet were calculated in accordance with AMCA Standard 301. The AMCA Certified Ratings Sound Seal applies to Sone Ratings only.

MOTOR COOLING AIRFLOW

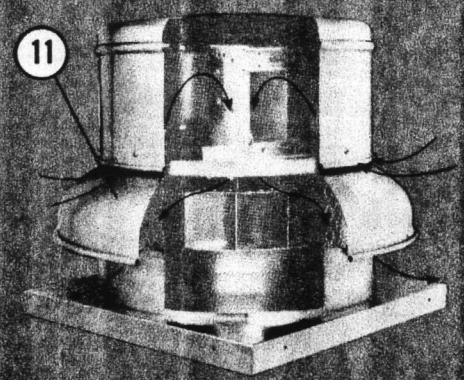

ACCESSORIES*

Birdscreen
Disconnect Switches
Manual Starters
Dampers
Roof Curbs
Sound Curbs
Extended Bases
Decorative or Protective Coatings

*See Back Cover for Detailed Information

SELECTION AND APPLICATION DATA

This catalog contains comprehensive data regarding the air and sound performance of GB exhausters. The data presented will aid in specifying, selecting and applying these fans in successful ventilation systems.

SELECTION

In most applications, two or more fans will be capable of attaining the required airflow and pressure. The final selection must weigh factors such as cost, horsepower, noise or space limitations. Larger fans tend to run slower, generate less noise, require less horsepower and have lower operating costs. Smaller fans run faster, have steeper performance curves and lower initial costs. The optimum selection rests in analyzing each application on its own merits based upon the factors given above.

Model GB fan ratings have been selected based upon motor thermal capabilities. In most cases, this allows for the motors to be successfully operated in their service factor range. This does not reduce motor life or performance and, therefore, is economically desirable. For applications in which the motor must not exceed its nameplate amperage rating, the following precaution must be taken. The belt drive losses must be accounted for.

Selecting a fan load with a five to ten percent lower BHP rating than the motor nameplate rating will assure a nonoverloading condition. (Example: 1/2 H.P. motor would require a maximum .45 BHP fan load). This procedure should also be followed when motors such as totally enclosed fan cooled or two speed are specified, since they, in many cases, do not have service factors.

APPLICATION

In order to assure proper fan performance caution must be exercised in the fan placement and connection to the ventilation system. Obstructions, transitions, poorly designed elbows, improperly selected dampers, etc. placed immediately ahead of the fan can cause reduced performance, excessive noise generation and increased mechanical stressing. For performance to be as published, the system to which the fan is to be connected must provide uniform and stable airflow into the fan.

Model GB fans are belt driven and have adjustable motor pulleys. The speed of the fans is factory set for the specified RPM but can be varied for final system balancing. The change in performance which occurs can be determined by the use of fan laws shown below.

$$CFM_2 = \left(\frac{RPM_2}{RPM_1}\right) CFM_1 \quad : \quad Ps_2 = \left(\frac{RPM_2}{RPM_1}\right)^2 Ps_1 \quad : \quad BHP_2 = \left(\frac{RPM_2}{RPM_1}\right)^3 BHP_1$$

NOTE: Subscript 1 indicates existing conditions.
Subscript 2 indicates new conditions after speed change.

A miniumum curb height of 8 inches is recommended. In areas where snow may be a problem, this height should be increased.

SOUND

Sone levels have been included on the performance pages to provide a means of quickly evaluating the relative loudness of fan selections. Sound data has also been presented in several other forms as presented on Pages 13 and 14.

FAN INLET CONDITIONS

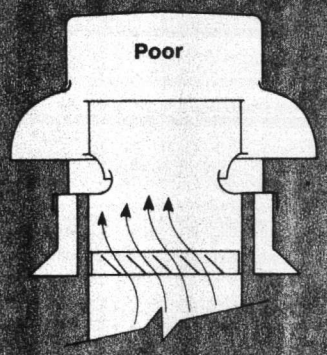

Dampers must open fully. Motorize dampers in low airflow applications to reduce losses.

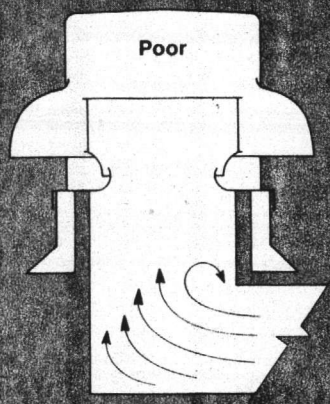

Avoid sharp turns or entrance conditions which cause uneven flow. Use turning vanes in elbows to reduce adverse effects.

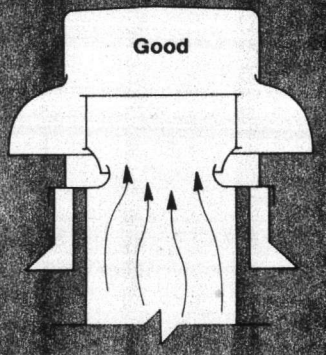

Provide uniform airflow at fan inlet to assure optimum performance.

Prevent air pre-rotation in the opposite direction of wheel rotation as this mechanically stresses wheel, drastically increases horsepower requirements and noise output.

TYPICAL SPECIFICATIONS

Roof exhaust fans shall be of the centrifugal, belt driven type. Construction of the fan housing shall be of heavy gauge aluminum mounted upon a rigid support structure which affords minimal resistance to airflow and noise generation. The fan wheel and inlet cone shall be aluminum and of the high performance, centrifugal blower type. Wheels shall overlap the spun inlet venturi for maximum performance. Wheels shall be statically and dynamically balanced to assure smooth and vibration-free operation. Entire drive assembly shall be mounted on vibration isolators.

Motor and drives shall be isolated from the exhaust airstream. Air for cooling the motor shall be taken into the motor compartment from a location free from discharge contaminants. Motors shall be of the heavy duty type with permanently lubricated, sealed ball bearings.

The entire drive assembly and wheel, as a unit, shall be removable through the support structure without dismantling the fan housing. The wheel shaft shall be mounted in heavy duty, permanently sealed pillow block ball bearings. Drives shall be sized for a minimum of 165% of driven horsepower. Pulleys shall be of the fully machined cast iron type, keyed and securely attached to the wheel and motor shafts. The motor pulleys shall be adjustable for final system balancing.

All fans shall bear the AMCA Certified Performance Seal for both air and sound performance.

Fans shall be Model GB as manufactured by Greenheck Fan Corporation of Schofield, Wisconsin.

ELECTRICAL CHARACTERISTICS

Single phase, single speed motors are available in 115 or 230 volts, in open, totally enclosed and explosion-proof frames, in the following H.P. ratings: ¼ thru 2 H.P.—1725 RPM.

Single phase, two speed, two winding motors are available in 115 volt rating, in open, totally enclosed and explosion-proof frames, in the following H.P. ratings: ¼ thru ¾ H.P.—1725/1140 RPM.

Single phase, two speed, two winding motors are available in 230 volt rating in open, totally enclosed and explosion-proof frames, in the following H.P. ratings: ½ thru 2 H.P.—1725/1140 RPM.

Three phase, single speed motors are available in 208-230/460 volts, in open, totally enclosed and explosion-proof frames, in the following H.P. ratings: ¼ thru 5 H.P.—1725 RPM.

Model GB-10

Greenheck Fan Corporation
Schofield, Wisconsin 54476

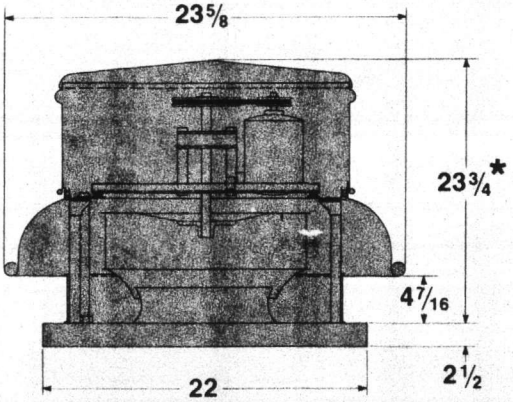

MAXIMUM BHP = (RPM/1000)³ X 0.057
MAXIMUM RPM — 1800
MAXIMUM MOTOR FRAME SIZE — 56
(Consult factory regarding larger frame sizes)

DIMENSIONAL DATA

Curb Cap	Shroud	Motor Compartment Cover	Damper Size	Roof Opening

★ May vary depending upon motor size.
■ Approximate drive combination range.

MODEL	■	HP	RPM	TS	STATIC PRESSURE (inches w.g.) 0.000	0.125	0.250	0.375	0.500	0.625	0.750	0.875	1.000	1.250
					SONE BHP	SONE BHP	SONE BHP	SONE BHP	SONE BHP	SONE BHP	SONE BHP	SONE BHP	SONE BHP	SONE BHP
GB 10-1	R-1	¼	960	2796	813	716	608							
					5.0 .04	4.2 .03	3.8 .05							
			1070	3116	907	818	732	607						
					6.1 .06	5.4 .06	5.0 .07	4.8 .07						
			1120	3282	949	864	784	676						
					6.6 .07	6.0 .07	5.6 .08	5.4 .08						
			1205	3510	1021	942	870	779	650					
					7.4 .08	6.8 .09	6.5 .10	6.3 .10	6.3 .09					
			1300	3766	1101	1028	959	885	790	643				
					8.2 .10	7.7 .11	7.4 .11	7.2 .12	7.1 .11	6.5 .11				
			1320	3845	1118	1046	978	907	815	679				
					8.3 .12	7.9 .12	7.6 .13	7.4 .13	7.2 .13	6.6 .13				
			1340	3905	1135	1064	996	928	839	714				
					8.5 .12	8.1 .13	7.8 .13	7.6 .14	7.4 .14	6.8 .14				
	R-2		1360	3961	1152	1082	1015	949	862	748				
					8.7 .13	8.2 .14	8.0 .14	7.8 .14	7.5 .14	7.0 .14				
			1380	4019	1169	1100	1033	969	886	782				
					8.9 .13	8.4 .14	8.1 .15	8.0 .15	7.7 .15	7.2 .15				
			1405	4092	1190	1122	1056	995	915	817				
					9.0 .14	8.6 .14	8.4 .15	8.2 .16	7.9 .16	7.4 .16				
			1430	4165	1212	1144	1080	1021	943	851	715			
					9.2 .14	8.8 .15	8.6 .16	8.4 .17	8.0 .17	7.6 .17	7.1 .16			
			1455	4236	1233	1167	1103	1046	971	885	759			
					9.4 .15	9.1 .16	8.9 .17	8.7 .18	8.2 .18	7.8 .18	7.3 .17			
			1480	4311	1254	1189	1126	1070	998	916	803			
					9.6 .16	9.4 .17	9.1 .17	8.9 .19	8.5 .19	7.9 .19	7.5 .18			
			1530	4456	1296	1233	1173	1117	1053	975	882			
					9.9 .18	9.8 .18	9.6 .19	9.3 .20	8.8 .21	8.3 .21	7.8 .21			
			1580	4622	1339	1277	1219	1163	1105	1033	951	835		
					10.4 .20	10.3 .20	10.1 .21	9.7 .22	9.3 .23	8.8 .23	8.2 .23	7.9 .22		
			1635	4762	1385	1326	1269	1215	1162	1095	1020	928		
					11.0 .22	11.0 .22	10.8 .23	10.3 .24	9.8 .25	9.3 .25	8.9 .25	8.6 .25		
GB 10-3	R-3	½	1655	4820	1402	1344	1287	1233	1182	1117	1044	956	832	
					11.3 .22	11.1 .23	10.9 .24	10.5 .25	10.0 .26	9.5 .26	9.1 .26	8.8 .26	8.6 .25	
			1680	4893	1423	1366	1310	1256	1208	1144	1073	991	876	
					11.6 .23	11.4 .24	11.2 .25	10.8 .26	10.4 .27	9.7 .27	9.3 .27	9.1 .27	8.9 .26	
			1710	4980	1449	1392	1337	1284	1236	1177	1108	1032	929	
					12.0 .25	11.8 .25	11.6 .26	11.2 .27	10.7 .28	10.0 .28	9.7 .28	9.5 .28	9.3 .28	
			1740	5068	1474	1418	1365	1312	1264	1208	1142	1070	981	
					12.4 .26	12.2 .27	12.0 .28	11.6 .28	11.1 .30	10.2 .30	10.1 .30	9.9 .30	9.6 .30	
			1770	5155	1500	1445	1392	1340	1293	1239	1176	1106	1023	
					12.8 .27	12.6 .28	12.4 .29	12.0 .30	11.9 .31	10.6 .32	10.6 .32	10.2 .32	9.9 .32	
			1800	5243	1525	1471	1419	1368	1321	1270	1209	1142	1065	794
					13.2 .29	13.0 .30	12.8 .30	12.6 .31	12.2 .33	11.0 .33	11.0 .33	10.7 .33	10.2 .33	9.6 .30

PERFORMANCE SHOWN IS FOR MODEL GB WITHOUT INLET OR OUTLET DUCTS

BHP DOES NOT INCLUDE DRIVE LOSSES

Model GB-24

Greenheck Fan Corporation
Schofield, Wisconsin 54476

MAXIMUM BHP = (RPM/900)³ X 1.994
MAXIMUM RPM — 950
MAXIMUM MOTOR FRAME SIZE — 182T

(Consult factory regarding larger frame sizes)

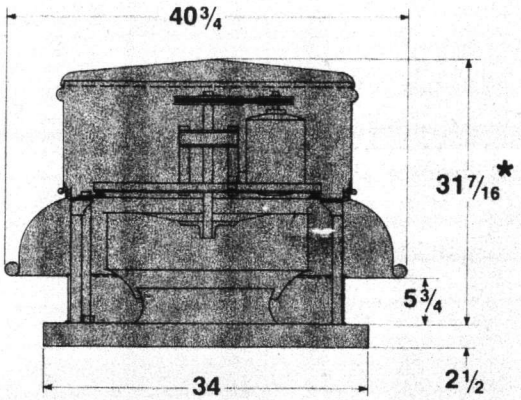

DIMENSIONAL DATA

(Metal Thickness Inches Allum.)				
Curb Cap	Shroud	Motor Compartment Cover	Damper Size	Roof Opening

★ May vary depending upon motor size.
■ Approximate drive combination range.

MODEL	■	HP	RPM	TS	STATIC PRESSURE TO DISCHARGE									
					0.000	0.125	0.250	0.375	0.500	0.625	0.750	0.875	1.000	1.250
					SONE BHP	SONE BHP	SONE BHP	SONE BHP	SONE BHP	SONE BHP	SONE BHP	SONE BHP	SONE BHP	SONE BHP
GB 24-4	R-1	¼	410	2630	3764	3259	2464							
					6.2 .47	5.7 .46	5.1 .46							
			455	2916	4177	3734	3120							
					7.0 .53	6.4 .52	5.9 .53							
GB 24-5	R-2	⅓	475	3047	4361	3938	3390							
					7.5 .56	6.8 .55	6.3 .56							
			500	3207	4590	4192	3700	2982						
					8.1 .61	7.3 .59	6.9 .61	6.1 .61						
GB 24-6	R-3	½	515	3303	4728	4343	3879	3213						
					8.4 .64	7.7 .62	7.3 .65	6.6 .66						
			535	3432	4912	4541	4114	3511						
					9.0 .68	8.2 .67	7.8 .69	7.2 .71						
			555	3560	5095	4738	4337	3790						
					9.6 .72	8.7 .70	8.4 .74	7.8 .78						
			575	3688	5279	4933	4556	4061	3400					
					10.2 .77	9.3 .75	9.0 .79	8.4 .83	8.0 .83					
GB 24-7	R-4	¾	600	3849	5509	5177	4828	4383	3790					
					10.9 .83	10.0 .81	9.7 .85	9.2 .89	8.8 .89					
			625	4009	5738	5420	5090	4683	4159	3466				
					11.8 .90	10.8 .87	10.6 .93	10.1 .97	9.7 .98	8.6 .92				
			655	4201	6014	5709	5398	5036	4569	3998				
					12.7 .97	11.8 .95	11.5 1.01	11.0 1.07	10.6 1.07	9.7 1.04				
GB 24-10	R-5	1	670	4296	6151	5854	5552	5204	4770	4225	3517			
					13.4 1.04	12.4 1.01	12.0 1.07	11.5 1.12	11.1 1.12	10.2 1.10	10.0 1.15			
			685	4394	6289	5998	5704	5369	4966	4449	3803			
					14.0 1.10	12.9 1.04	12.5 1.15	12.1 1.18	11.6 1.18	10.7 1.16	10.5 1.22			
			700	4490	6427	6142	5856	5534	5148	4666	4085			
					14.6 1.15	13.6 1.09	13.1 1.22	12.6 1.23	12.1 1.24	11.3 1.23	11.3 1.29			
			720	4616	6610	6333	6058	5752	5387	4941	4418	3713		
					15.3 1.22	14.3 1.17	13.8 1.30	13.3 1.31	12.8 1.32	12.0 1.31	12.0 1.39	11.7 1.32		
GB 24-15	R-6	1½	750	4811	6886	6619	6356	6074	5741	5346	4868	4299		
					16.6 1.04	15.4 1.09	14.9 1.13	14.5 1.14	14.0 1.15	13.3 1.15	13.2 1.13	12.1 1.09		
			775	4971	7115	6858	6603	6332	6023	5663	5225	4731	4087	
					17.7 1.15	16.3 1.20	15.8 1.24	15.3 1.26	14.8 1.27	14.3 1.27	14.2 1.26	13.7 1.23	12.6 1.16	
			800	5131	7345	7095	6848	6589	6299	5963	5566	5108	4562	
					18.7 1.27	17.4 1.31	16.7 1.36	16.2 1.38	15.8 1.39	15.3 1.40	15.1 1.39	14.6 1.37	13.7 1.32	
			825	5292	7574	7332	7092	6844	6573	6260	5902	5476	5004	
					19.8 1.39	18.5 1.44	17.7 1.49	17.3 1.51	16.7 1.52	16.5 1.54	16.2 1.53	15.7 1.52	15.0 1.48	
GB 24-20	R-7	2	850	5452	7804	7569	7336	7098	6844	6551	6216	5820	5382	4085
					21.0 1.52	19.6 1.57	18.6 1.62	18.2 1.65	17.7 1.66	17.5 1.68	17.2 1.68	16.8 1.67	16.3 1.64	15.4 1.47
			875	5612	8033	7805	7578	7351	7106	6829	6516	6159	5753	4733
					22.1 1.86	20.7 1.71	19.7 1.76	19.2 1.80	18.7 1.81	18.6 1.83	18.1 1.83	18.0 1.83	17.8 1.81	17.0 1.69
			905	5805	8309	8088	7869	7651	7416	7159	6872	6556	6172	5298
					23.6 1.83	22.0 1.86	21.0 1.84	20.4 1.99	20.0 2.00	20.0 2.01	19.6 2.03	19.3 2.03	19.3 2.01	19.1 1.93

PERFORMANCE SHOWN IS FOR MODEL GB WITHOUT INLET OR OUTLET DUCTS

BHP DOES NOT INCLUDE DRIVE LOSSES

ACCESSORIES

BIRDSCREEN
Expanded metal birdscreen is available. The design and mesh of the screen has been selected to prevent the entrance of foreign objects and minimize resistance to airflow. The birdscreen is factory installed when specified.

MANUAL STARTERS
Manual starters are available for single phase and three phase motors in both one and two speed applications. These starters are available for applications up to two horsepower. Starters are shipped separate from unit.

PROTECTIVE COATINGS
Special finishes are available for protective or decorative applications. Consult your representative or factory for complete information.

EXTENDED BASE
Extended bases are available for extending the discharge of the unit above the roof line. These bases are also recommended for mounting dampers when ready access is required. A gasketed access door is located at the front of the base.

DAMPERS
Gravity or motorized dampers are available for mounting in the roof curb or duct. These dampers feature sturdy frames with prepunched mounting holes, aluminum blades with felt edges and a balanced design for minimal resistance to airflow. Recommended sizes are shown on performance pages.

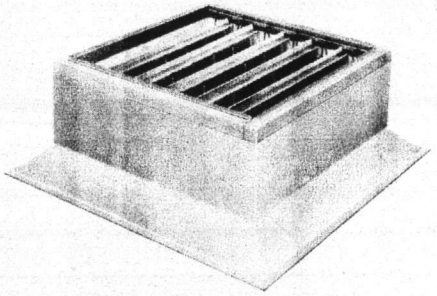

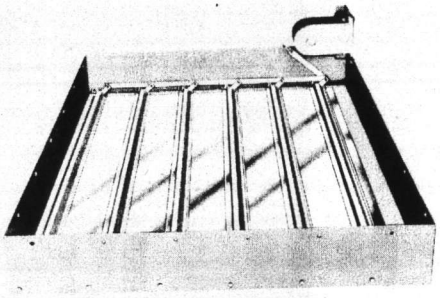

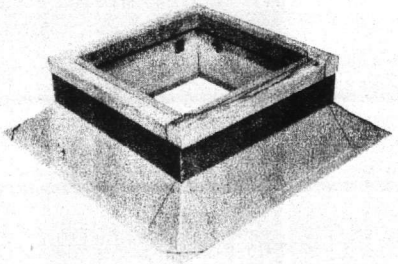

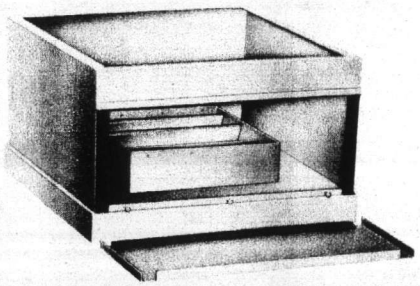

DISCONNECT SWITCHES
Disconnect switches are available for all standard electrical requirements. When ordered, they are mounted in the motor compartment.

SOUND CURBS
Sound curbs are available for use with Model GB units. The curb is constructed of heavy gauge steel (aluminum is optional) welded throughout. Rigid fiberglass board of six pound density is utilized for the curb wall insulation. Further sound attenuation is achieved by the use of baffles constructed of perforated aluminum filled with fiberglass insulation. The baffles are streamlined to minimize resistance to airflow and removable to gain access to the dampers.

For further information regarding sound attenuation, airflow resistance and dimensional data, consult Greenheck's sound curb catalog.

ROOF CURBS
Several curb styles are available for ease of installation. Greenheck curbs feature wooden nailing strips held in place by screws and a metal wrap-around. Fiberglass insulation is firmly attached to the curb sides to minimize condensation and reduce sound levels.

Curbs are available in galvanized steel or aluminum construction. Optional damper holding trays are available when specified.

See Greenheck's curb catalog for complete constructional details and sizing instructions.

WARRANTY
The Greenheck Fan Corporation warrants this equipment to be free from defects in material and workmanship for a period of one year from the purchase date.

Any units or parts which prove to be defective during the warranty period will be replaced at our option when returned to our factory, transportation prepaid.

The motor is warranted by the motor manufacturer for a period of one year. Should the motor prove defective during this period, it should be returned to the nearest authorized motor service station.

Greenheck Fan Corporation will not be responsible for any installation or removal costs.

Greenheck
Fan Corporation

Due to continuing research Greenheck Fan reserves the right to change specifications without notice.

Enlisted Personnel Housing
Camp Lejeune, NC

CONTRACTOR: [illegible]

ENGINEER: J. N. Pease Associates

DRWG: [illegible]

SHEET 2 OF 7

DATE 3/27/84

MARK	MODEL	NO. REQD	MOTOR INFORMATION						CFM	SP	T. S.	REMARKS
			H.P.	R.P.M.	VOLTS	CYC	PH	FRAME				
EF-2	SDE-10-32-D	15	1/20	1550	115	60	1	ODP	500	.125	4056	BD, Solid State Speed Controller

Spec: 05-82-2244/15801-9/PP 3.5

SDE PROPELLER FAN

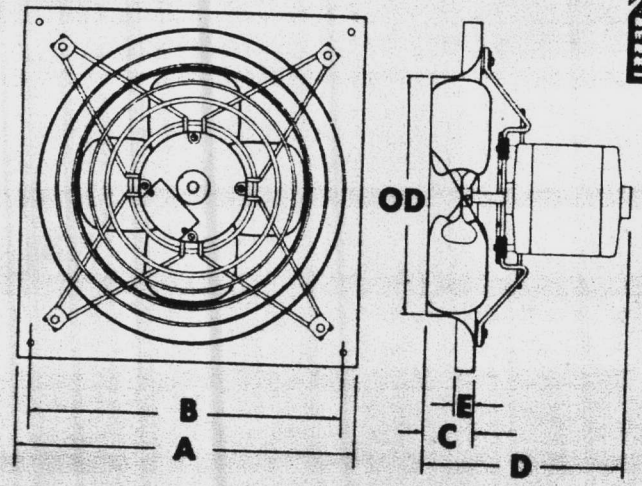

amca CERTIFIED RATINGS
AIR PERFORMANCE
AIR MOVEMENT AND CONTROL ASSOCIATION, INC.

SDE DIM. DATA

MODEL	A	B	C	D	E	Damper	O.D.
SDE— 8	13	12	2	7	1	10x10	8¼
SDE—10	15	13½	2	7	1	12x12	10¼
SDE—12	18	16½	2¾	10¾	1	14x14	12¼
SDE—14	20	18½	3¼	11¼	1	16x16	14¼
SDE—16	22	20½	3¾	11¾	1	18x18	16½
SDE—18	24	22½	3¾	14	1	20x20	18½
SDE—20	26	24½	3¾	14¼	1	22x22	20½

Par. 2.2.1
"e. Exhaust Fans."
Par. 3.6.2

ABBREVIATIONS FOR SPECIAL FEATURES

→ B. D. — BACKDRAFT DAMPER
M. S. — MANUAL STARTER
B. D. M. — BACKDRAFT DAMPER MOTORIZED

Greenheck
FAN CORPORATION
SCHOFIELD, WI 54476

CATALOG NO.
S-4-81

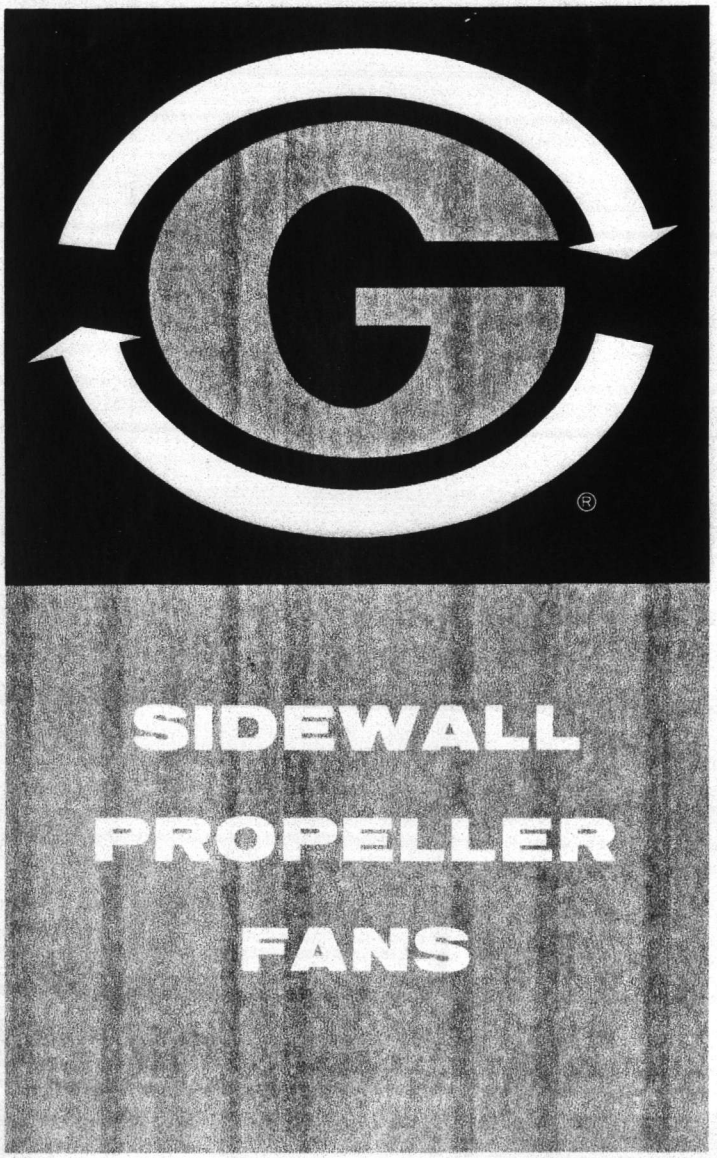

Greenheck

GREENHECK FAN CORPORATION
SCHOFIELD, WISCONSIN 54476

MODEL SDE

DIRECT DRIVE PROPELLER FANS

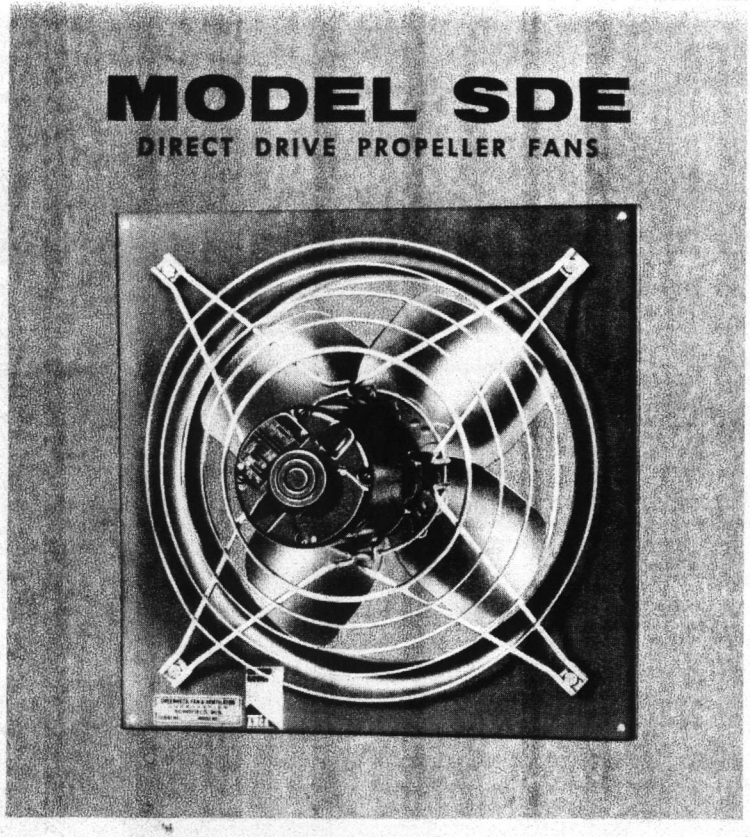

Greenheck

The SDE — A complete line of panel fans designed to move air in the low pressure range of 0 to ½ inch.

Since most applications of this type of fan place it in the proximity of hearing, much attention has been spent on getting a quiet running fan. The design of the guard removes any obstruction from the passing blades, thereby reducing beats and turbulance.

The deep spun fan orifice directs the air smoothly to the propeller blades with a minimum of disturbance.

The fan panel is constructed of steel and coated with Perma-Tector™ to provide a lasting finish.

The guard is constructed of heavy gauge wire, and finished in a zinc plated surface.

Neoprene rubber mounts are employed to isolate motor noise at the point where the motor is attached to the guard rather than at where the guard attaches to the panel as in many designs. This prevents the noise from going any further than the motor itself.

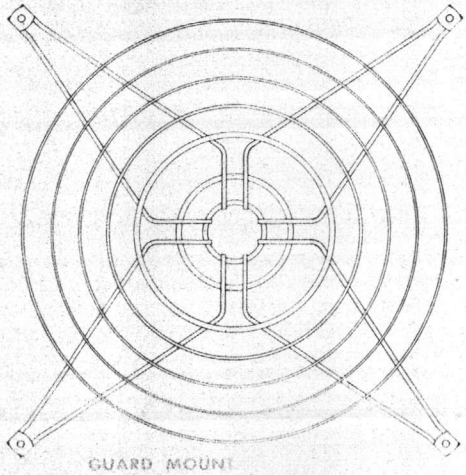

GUARD MOUNT

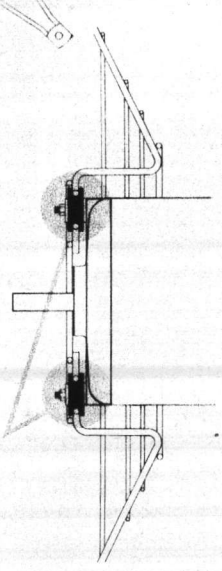

ISOLATION MOUNT

PERFORMANCE DATA CHARTS ON NEXT PAGE

DIMENSIONAL DATA

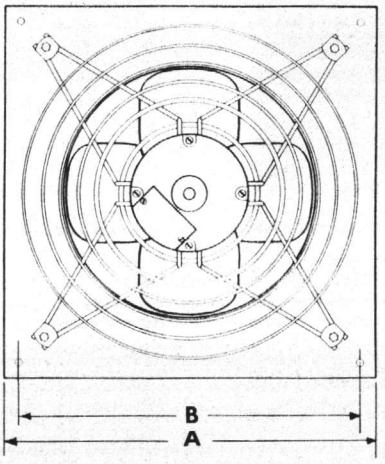

MODEL	A	B	C	D	E	Damper	O.D.
SDE— 8	13	12	2	7	1	10x10	8 ¼
SDE—10	15	13 ½	2	7	1	12x12	10 ¼
SDE—12	18	16 ½	2 ¾	10 ¾	1	14x14	12 ¼
SDE—14	20	18 ½	3 ¼	11 ¼	1	16x16	14 ¼
SDE—16	22	20 ½	3 ¾	11 ¾	1	18x18	16 ½
SDE—18	24	22 ½	3 ¾	14	1	20x20	18 ½
SDE—20	26	24 ½	3 ¾	14 ¼	1	22x22	20 ½

MODEL SDE
PERFORMANCE DATA

MODEL	HP	RPM	TS	0" S.P.		1/10" S.P.		1/8" S.P.		1/4" S.P.		3/8" S.P.		1/2" S.P.		5/8" S.P.	
				CFM	BHP	CFM	BHP	CFM	BHP	CFM	BHP	CFM	BHP	CFM	BHP	CFM	BHP
BLADE DIA. 8"																	
SDE-8-24-E	1/80	1050	2199	206	.002	48	.004	27	.004								
SDE-8-24-D	1/80	1550	3246	305	.007	204	.009	117	.010								
SDE-8-32-E	1/80	1050	2199	265	.004	66	.006	51	.006								
SDE-8-32-D	1/80	1550	3246	392	.011	267	.013	229	.014								
BLADE DIA. 10"																	
SDE-10-24-E	1/40	1050	2748	402	.005	172	.009	145	.010								
SDE-10-24-D	1/40	1550	4056	594	.017	466	.022	429	.025								
SDE-10-32-E	1/40	1050	2748	519	.010	260	.014	210	.015								
SDE-10-32-D	1/20	1550	4056	765	.030	632	.036	588	.038	332	.047						
BLADE DIA. 12"																	
SDE-12-24-E	1/20	1050	3299	707	.011	494	.016	419	.018	195	.027						
SDE-12-24-B	1/20	1140	3581	768	.014	572	.020	521	.021	269	.032						
SDE-12-24-D	1/20	1550	4869	1044	.035	901	.044	865	.046	678	.054						
SDE-12-24-A	1/12	1725	5419	1162	.048	1034	.059	1001	.061	838	.071	599	.086				
SDE-12-32-C	1/20	860	2702	726	.011	363	.017	288	.020								
SDE-12-32-B	1/20	1140	3581	962	.026	753	.033	683	.035	347	.048						
SDE-12-32-A	1/8	1725	5419	1456	.092	1316	.10	1281	.10	1101	.12	813	.13				
SDE-12-40-C	1/20	860	2702	840	.018	401	.024	358	.025								
BLADE DIA. 14"																	
SDE-14-24-C	1/20	860	3150	925	.013	528	.021	419	.024								
SDE-14-24-B	1/20	1140	4176	1227	.029	998	.042	942	.046	519	.060	388	.073				
SDE-14-24-A	1/8	1725	6319	1856	.10	1702	.12	1663	.12	1479	.15	1263	.16				
SDE-14-32-C	1/20	860	3150	1143	.025	801	.033	572	.035	337	.050						
SDE-14-32-B	1/12	1140	4176	1515	.057	1288	.070	1226	.073	709	.088	570	.10				
SDE-14-32-A	1/4	1725	6319	2292	.20	2148	.21	2112	.22	1915	.24	1672	.26				

PERFORMANCE SHOWN IS FOR SDE WITHOUT DUCTS.

CONTINUED ON NEXT PAGE

ACCESSORIES

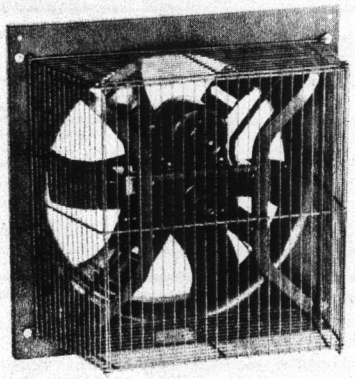

FAN GUARD -- MOTOR SIDE

The motor side guard is constructed of heavy gauge wire. It completely encloses the running components of the fan and eliminate any possibility of danger to persons near the fans. The top and bottom sections of the guard is removable to permit access to the motor drive and bearings for servicing and maintenance.

FAN GUARD
OPPOSITE MOTOR SIDE

When opposite motor side protection is required a heavy gauge mesh guard is available. It is illustrated in the photo to the right.

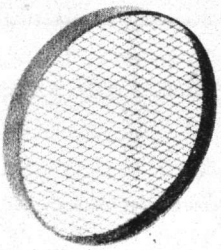

DAMPERS

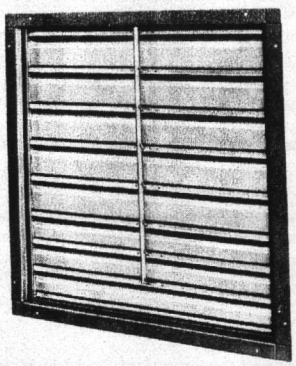

AUTOMATIC

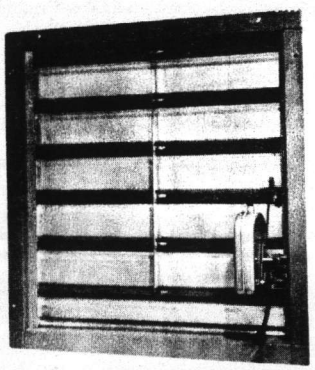

MOTORIZED

MODEL WD-300

Model WD-300 dampers are available in gravity or motorized configurations. These dampers have the following construction features:

- Sturdy frames with prepunched mounting holes.
- Aluminum blades with felt on closing edges.
- Damper pins secured in bushings for smooth and quiet operation.
- A balanced design which affords minimal resistance to airflow.

Model WD dampers are available with 115 volt, 230 or 460 volt motor packs.

SPECIAL FINISHES

Heresite is a phenolic resinous coating. This coating is of the heat hardening type. It is nontoxic, odorless and tasteless after baking. It is not injuriously affected by the following chemicals:

Sulphuric acid
Phosphoric acid
Esters, ethers
Organic carboxylic acids
Organic fatty acids
Glycols, glycol ethers
Alcohols, alcohol ethers
Sulfurous acids, sulfur dioxide
Ketones, aldehydes
Hydrocarbons
Gasoline, oils, lubricants
Refrigerants
Inorganic salt solutions of all types
Ammonia solutions and mild alkalis

Phenolic-epoxy coating is resistant to acids, solvents, concentrated caustics and strong detergents.

Vinyl coating has very good flexibility, and resists most chemicals. It has excellent resistance to weathering.

ELECTRICAL CHARACTERISTICS

Single Phase, single speed motors are available in 115 or 230 volts, in open, totally enclosed and explosion proof frames, in the following HP. ratings:

1/4 thru 3 HP.	1725 RPM.
1/8 thru 2 HP.	1140 RPM.
1/12 thru 1 1/2 HP.	860 RPM.
1/12 thru 1 HP.	600 RPM.

Single phase, two speed, two winding motors are available in 115 volt rating, in open, totally enclosed and explosion proof frames in the following HP. ratings:

1/4 thru 3/4 HP.	1725 RPM.
1/8 thru 1/2 HP.	1140 RPM.

Single phase, two speed, two winding motors are available in 220 volt rating in open, totaly enclosed and explosion proof frames, in the following HP. ratings:

1/2 thru 2 HP.	1725 RPM.

Three phase, single speed motors are available in 208-220/440 volts, in open, totally enclosed, and explosion proof frames, in the following HP. ratings:

1/4 thru 7 1/2 HP.	1725 RPM.
1/8 thru 10 HP.	1140 RPM.
1/2 thru 10 HP.	860 RPM.
1/2 thru 5 HP.	600 RPM.

Three phase, two speed motors, two winding or single winding are available in 208-220 or 440 volts in open, totally enclosed and explosion proof frames, in the following HP. ratings:

1/2 thru 7 1/2 HP.	1725 RPM.
1/2 thru 10 HP.	1140 RPM.
1/2 thru 10 HP.	860 RPM.

TIP SPEED CHART

BLADE DIA.	TIP SPEED — R.P.M.			
	580	860	1140	1725
20	3036	4504	5970	8920
24	3644	5404	7163	10838
30	4555	6754	8954	13548
36	5466	8105	10744	16258
42	6377	9456	12535	
48	7288	10807	14326	

PRINTED IN U.S.A. SUPERSEDES A-1-A-30-D-1

ITEM 21

CONTROL SYSTEM FOR MECHANICAL BLDG.

Designed & Installed by:

Jay Johnson Company
1612 Dixie Trail
Raleigh, N.C. 27607
PH: (919) 787-6581

Parts can be furnished by above supplier.

Mechanical Contractor:

Ramsey Air Conditioning, Inc.
P.O. Box 1333
Jacksonville, N.C. 28540
PH: (919) 455-0414

SEQUENCE OF OPERATION

FOR

UEPH, CAMP LEJEUNE, NC

Per 3.6.1. Heating/Cooling Control (System - Bldg. 441)

S-1 "ON-OFF" Switch energizes system.

S-2 - "COOL-AUTO-HEAT" Selects mode.

Thermostat T-1 with bulb in OA set at 65* indexes for heat/cool operation. Cool and heat indicating lights determine INDEXED position.

When heating is indexed, the heat index relay R-5 is energized/ heat index light is on.

With CR-1 de-energized-changeover valves V13 and V5 position for H.W. flow and relay R-5 allows converter (control) operation.

Hot water pump operates when valves position to energize R-2.

To change to cooling - switch S-2 or thermostat T-1 first indexes to cooling which turns on cool index light - heat index light goes off.

Relay R-5 drops out to close converter control valves, and water circulation continues with H.W. pump until temperature cools to setting of AO-1.

At this time changeover relay CR-1 energizes to position main changeover valves V13 and V5 to cooling flow. When both are properly positioned, relay R-2 is de-energized. Relay R-3 energizes to start C.W. circulating pump and allow operation of chillers by dual chiller operating program.

Per 3.6.2. Chiller Operation and Programming

Indexing for heating or cooling operation is as previously described.

When chilled water pump (P-1) is permitted to operate by EMCS and indexing, flow switches allow respective chillers to operate from factory furnished control's.

Per 3.6.3. Hot Water Control

An outdoor reset controller (CC-1) with sensors in water leaving converter and in outside air, modulates two steam regulating valves V11 and V10 in sequence to maintain leaving water temperature or pre determined schedule.

When H.W. pump and heating is not indexed ON, an override relay causes both valves to go to closed position.

Per 3.6.6. Mechanical Equipment Building (411) Exhaust Fan

On rise in temperature above setting (85*) of thermostat (T-6), fan shall start and outside air intake damper (D-4) shall open. On drop, reverse shall occur.

Per 3.6.10 Hot Water Storage Heaters

Steam control valves for domestic hot water tanks are self-contained. Tempering water valve is also self-contained.

Domestic water recirculating pump P-3 is controlled from squastat (T-8) located in return, set at 110* F. to cycle pump on temperature drop.

General Instructions

TC-4100 Series
TC-4200 Series
Bulb Thermostats
Return Air Thermostats

For on-off control of media temperature in ducts, tanks, liquid lines, etc.

TC-4100 Series **one stage** units control one electrical circuit. Available in single or dual bulb configurations. (See Performance Table.)

TC-4200 Series **two stage** units control two electrical circuits in sequence. Available in single or dual bulb configurations. (See Performance Table.)

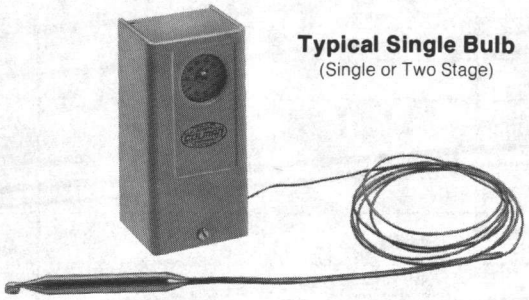

Typical Single Bulb
(Single or Two Stage)

Dual bulb units are used to vary the control point of the controlled media as a function of outside air temperature. The ratio specified is outdoor to indoor. A unit with a 1 to 1-1/2 ratio will increase the water temperature 1-1/2°F for a 1°F decrease in outdoor temperature.

Air bulb units feature a coiled, fast responding air bulb. Used in return air control applications.

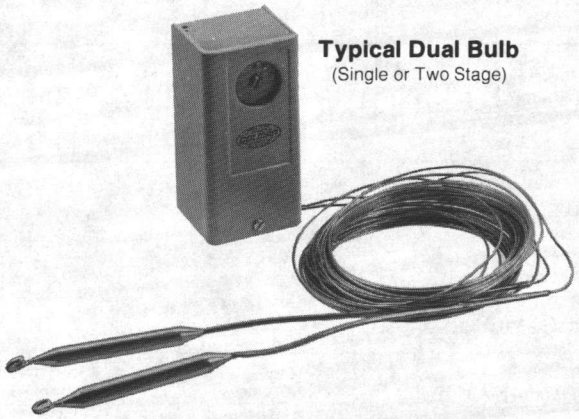

Typical Dual Bulb
(Single or Two Stage)

Device: Liquid filled thermal element actuates one snap acting SPDT switch per stage. Large color coded terminals. Setpoint adjustment dial plate is marked in °F on one side and °C on the other. The thermal differential is adjustable within the limits shown in the performance table. The mechanism is enclosed in a metal case and the cover, and has 1/2-inch to 3/4-inch conduit opening in the bottom of the case. Remote bulbs are suitable for immersion, duct, or outside air mounting.

Dimensions

Bulb Units: 2-1/4" (57 mm) Wide × 4-5/8" (117 mm) High × 2" (51 mm) Deep.

Air Bulb Units: 2-1/4" (57 mm) Wide × 9" (229 mm) High × 2" (51 mm) Deep.

Typical Air Bulb
(Single or Two Stage)

Electrical Rating: All Units Except TC-4115*

Switch Rating (50/60 Hz)	24V	120V	240V
Full Load Amps	9.8	9.8	8.0
Locked Rotor Amps	58.8	58.8	48.0
Pilot Duty VA	60	360	360
Non-Inductive Amps (Resistive)	—	—	—
Single Stage	22	22	22
Two Stage	16	16	8.0

*TC-4115 for System 8000 and dry circuit switching.
Electrical Rating: 1.0 amp at 24 Vac; .25 amp at 24 Vdc.

Performance and Selection Table

Type	Part Number	Setpoint Adjustment Range	Dual† Bulb Ratio	Dimensions			Differential		Maximum Safe Bulb Temperature	Case Ambient Temperature
				Capillary (Copper)	Bulb (Copper)		Factory Set	Adjustable		
Single Stage Single Bulb	TC-4111	-40 to 120°F		6′	3/8 × 4″		3°F	3 to 16°F	170°F	-40 to 150°F
	TC-4111-020			20′						
	TC-4112	100 to 260°F		6′					310°F	
	TC-4115*	-40 to 120°F							170°F	
	TC-4121			10′ Armored						
	TC-4122	100 to 260°F							310°F	
	TC-4123	190 to 350°F							400°F	
Single Stage Dual Bulb	TC-4151	70 to 120°F	1:1-1/2 **	30′ Each Bulb	Indoor 3/8 × 4″	Outdoor 3/8 × 5-1/2″	3°F	1.5 to 10°F	Total of indoor and outdoor temperatures must not exceed 280°F	-40 to 150°F
	TC-4152		1:1		3/8 × 4″	3/8 × 4″		3 to 16°F		
One Stage Air Bulb	TC-4166	50 to 90°F		None	Coiled 2-1/2 × 2″		2°F Fixed		-40 to 145°F Safe Bulb Range	-40 to 150°F
Two Stage Single Bulb	TC-4211	-40 to 120°F		6′	3/8 × 4″		3°F	Per Stage Fixed	170°F	-40 to 150°F
	TC-4221			10′ Armored				Between Stages 2 to 10°F		
	TC-4222	100 to 260°F							310°F	
	TC-4223	190 to 350°F							400°F	
Two Stage Dual Bulb	TC-4251	70 to 120°F	1:1-1/2 **	30′ Each Bulb	Indoor 3/8 × 5-1/2″	Outdoor 3/8 × 4″	3°F	Per Stage Fixed Between Stages 1.5 to 6.5°F	Total of indoor and outdoor temperatures must not exceed 280°F	-40 to 150°F
	TC-4252		1:1		3/8 × 4″	3/8 × 4″		2 to 10°F		
Two Stage Air Bulb	TC-4266	50 to 90°F		None	Coiled 2-1/2 × 2″		3°F	Per Stage Fixed 2°F Between Stage Adj. 1 to 5°F	-40 to 145°F Safe Bulb Range	-40 to 150°F

*TC-4115 for System 8000 and dry circuit switching. Electrical Rating: 1.0 amp at 24 Vac; .25 amp at 24 Vdc.

**TC-4151 and TC-4251 — For 1-1/2:1 ratio reverse bulbs and use extra dial supplied with unit.

†First number of reset ratio typically indicates outdoor air temperature change required to increase the setpoint by the second number.

Ratio Selection Table

Outdoor Temperature (°F)	Ratio	Change in Water Temperature for Different Ratios as Outdoor Temperature Drops from 70°F to Design Temperature					
		Dial Set at 70°F	Dial Set at 80°F	Dial Set at 90°F	Dial Set at 100°F	Dial Set at 110°F	Dial Set at 120°F
-30	1 to 1-1/2	70 to 220	80 to 230	90 to 240	100 to 250	110 to 260	120 to 270
	1 to 1	70 to 170	80 to 180	90 to 190	100 to 200	110 to 210	120 to 220
	1-1/2 to 1	70 to 137	80 to 147	90 to 157	100 to 167	—	—
-20	1 to 1-1/2	70 to 205	80 to 215	90 to 225	100 to 235	110 to 245	120 to 255
	1 to 1	70 to 160	80 to 170	90 to 180	100 to 190	110 to 200	120 to 210
	1-1/2 to 1	70 to 130	80 to 140	90 to 150	100 to 160	—	—
-10	1 to 1-1/2	70 to 190	80 to 200	90 to 210	100 to 220	110 to 230	120 to 240
	1 to 1	70 to 150	80 to 160	90 to 170	100 to 180	110 to 190	120 to 200
	1-1/2 to 1	70 to 123	80 to 133	90 to 143	100 to 153	—	—
0	1 to 1-1/2	70 to 175	80 to 185	90 to 195	100 to 205	110 to 215	120 to 225
	1 to 1	70 to 140	80 to 150	90 to 160	100 to 170	110 to 180	120 to 190
	1-1/2 to 1	70 to 117	80 to 127	90 to 137	100 to 147	—	—
+10	1 to 1-1/2	70 to 160	80 to 170	90 to 180	100 to 190	110 to 200	120 to 210
	1 to 1	70 to 130	80 to 140	90 to 150	100 to 160	110 to 170	120 to 180
	1-1/2 to 1	70 to 110	80 to 120	90 to 130	100 to 140	—	—
+20	1 to 1-1/2	70 to 145	80 to 155	90 to 165	100 to 175	110 to 185	120 to 195
	1 to 1	70 to 120	80 to 130	90 to 140	100 to 150	110 to 160	120 to 170
	1-1/2 to 1	70 to 103	80 to 113	90 to 123	100 to 133	—	—
+30	1 to 1-1/2	70 to 130	80 to 140	90 to 150	100 to 160	110 to 170	120 to 180
	1 to 1	70 to 110	80 to 120	90 to 130	100 to 140	110 to 150	120 to 160
	1-1/2 to 1	70 to 97	80 to 107	90 to 117	100 to 127	—	—

Dual Bulb Selection

On the dual bulb units, indoor and outdoor bulbs are determined by the ratio selected. See Performance and Selection Table. Ratio refers to the outdoor air temperature change compared to the water temperature change. The dial setpoint is the water temperature setpoint when the outdoor temperature is 70°F.

To select ratio, it is necessary to know only: (1) outdoor design temperature, (2) maximum water temperature at outdoor design temperature, and (3) desired water temperature at 70°F outdoors. Use the Ratio Selection Table to determine the required ratio based on this information and set the dial per item (3). NOTE: If a 1-1/2:1 ratio is selected, the extra dial supplied with the unit must be used.

Example: Select ratio for an installation with a -10°F design temperature and estimated supply water temperatures of 75°F at 70°F outdoors and 125°F at -10°F outdoors. From Ratio Selection Table, -10°F for 1-1/2:1 ratio, note by interpolation (70°F to 123°F with dial at 70°F, 80°F to 133°F with dial at 80°F) that water temperature varies from 75°F to 128°F as outdoor temperature drops from 70°F to -10°F.

For this application, the 1-1/2:1 ratio should be selected. The extra dial supplied with the unit would be used, and the dial set at 75°F.

Options

Single bulb units are available with optional capillary lengths of 20′ or 45′.

Accessories: (Order Separately)

Part No.	Description	
AT-201*	Bulb Well	Copper, 3/4″ MNPT 9-1/2″
AT-203*		Stainless, 3/4″ MNPT 9-1/2″
AT-206		Copper, 1/2″ MNPT 4-1/2″
AT-208	Duct Mounting Kit for Bulb	
AT-209	Liquid Line, or Tank, Bulb Mounting Kit. A Bulb Well is recommended. (Required with AT-201 or AT-203.)	
AT-210	Concealed Adjustment Kit. Includes plate to conceal setpoint adjustment and lock cover screw.	
AT-211	Outside Bulb Shield	

*Requires AT-209 Bulb Mounting Kit.

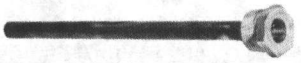

Immersion Well AT-20X

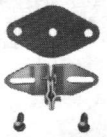

Bulb Duct Mounting Kit AT-208

Concealed Adjustment Kit AT-210

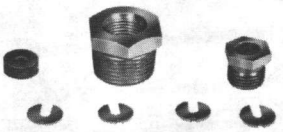

Liquid Line or Tank Bulb Mounting Kit AT-209
(Also Required with AT-201 or AT-203 Well)

Pre-Installation

Refer to the INSTALLATION and Performance Data applicable to the part number of the device being installed. Make a visual inspection of the device for obvious signs of damage. Avoid locations where excessive moisture, corrosive fumes, vibration or high ambient exists.

Installation

Location

Locate the device allowing proper distance to the bulb location. The case can be mounted in any position. Refer to Figure 1 for case dimensions.

Procedure

Remote Bulb Models
Air Bulb Models — Mounting in Return Air Duct

1. Remove cover and provide 2 holes for #10 round head screws using the housing as the template or by using the dimensions shown in Figure 1.
2. Partially insert the mounting screws in the screw holes. Fit the housing over the screws, slide housing down on the screws and tighten the screws.

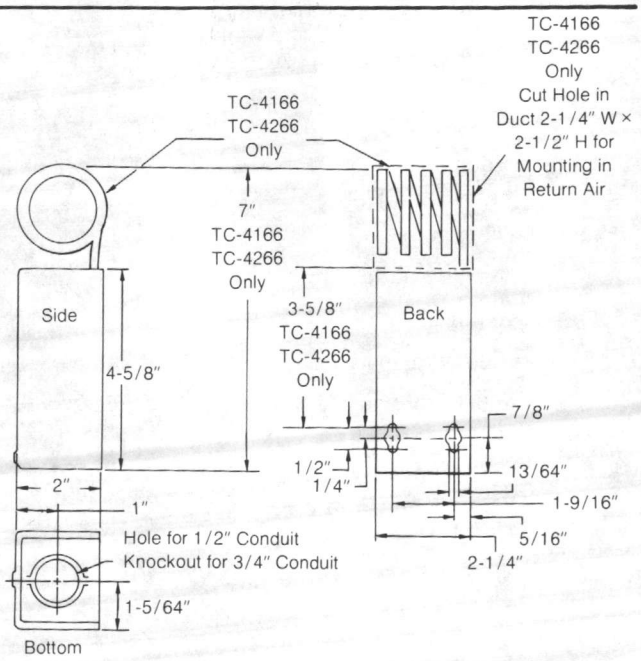

Figure 1. Case Dimensions

Checkout

After installing a thermostat, make an initial check of the switching action. Verify the switch action by listening to the switch contacts.

1. Turn the setpoint dial to a temperature above ambient. This should cause the thermostat to switch, making orange to brown.
2. Turn the setpoint dial setting down gradually. Orange to brown must break, making orange to red.
3. Compare the differential of the device to the differential shown on the performance charts by turning the dial. The differential of the devices is the difference in dial reading between the make of orange to brown and the make of orange to red on single switch units.

Run/Adjust

Setpoint

Screwdriver adjustment. Scales dual marked °F on front and °C on back. To change scale, remove spring retaining ring, select scale and replace retaining ring.

Differential Adjustment

The differential is adjustable by turning the adjustor located on side of device (see Figure 10).

Single stage: Each line represents approximately 3°F change.

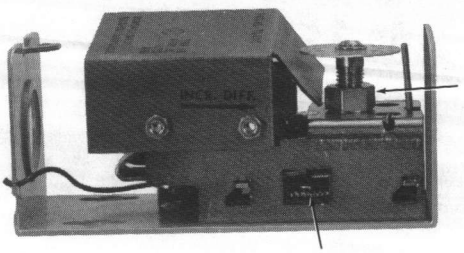

Figure 10

Two stage: Each notch represents approximately 2°F change between stages. (Differential per switch is fixed.)

To adjust differential:

1. Disconnect power to unit.
2. Remove cover.
3. Turn adjustor to approximately desired position.
4. Check out by turning dial and noting dial readings where switch contacts make.
5. After changing differential, recalibrate. See Service and Repair.

Service and Repair

Calibration

1. With all power disconnected, soak bulb(s) for 10 minutes at known temperature (must be 70°F for dual bulb).
2. Turn dial and note where switch contacts make.
3. Turn dial midway between click points.
4. Turn the calibration nut (located under dial) until the temperature of the bulb is indicated on the dial. (See Figure 10.)

NOTE

On two-stage units follow above procedure. "LO" switch is first stage on cooling applications. "HI" switch is first stage on heating applications.

Repair

Field repair is not recommended. Replace defective device.

Barber-Colman Company
ENVIRONMENTAL CONTROLS DIVISION

1354 Clifford Avenue
P.O. Box 2940
Loves Park, IL U.S.A. 61132-2940

LITHO IN U.S.A.

Air Bulb Models

Mounting Outside of Return Air Duct

1. Prepare duct for mounting by cutting hole and providing mounting screw holes per Figure 1.
2. Fabricate a cover as shown in Figure 2.
3. Carefully roll bulbs toward back of unit and insert through 2-1/4″ × 2-1/2″ hole.
4. Remove cover and attach unit to duct with #10 screws.
5. Attach cover over 2-1/4″ × 2-1/2″ hole.

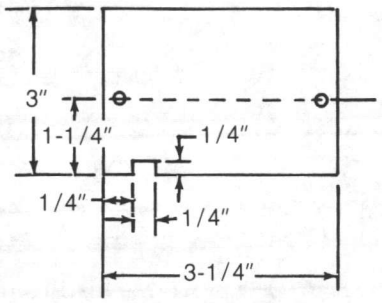

Figure 2. Field Supplied Duct Hole Cover Plate

Remote Bulb Mounting — Duct and Outdoor

Maximum insertion length (6 inches). Maximum safe bulb temperature above scale range. For dual bulbs, total of indoor and outdoor bulb temperatures must not exceed (280°F).

Duct: Install bulb with AT-208 kit as shown in Figure 3.

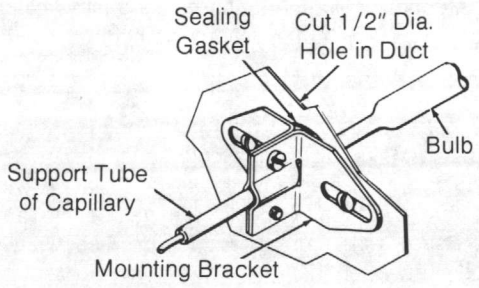

Figure 3. Duct Mounting with AT-208

Outdoor: Install with AT-211 kit as shown in Figure 4.

1. Mount bulb to outside wall or surface with bulb clip.
2. Place shield over bulb and fasten to mounting surface.

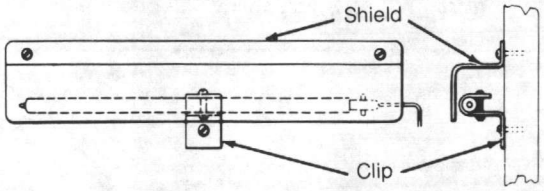

Figure 4. Outdoor Mounting with AT-211

Bulb Mounting — Liquid Line and Tank

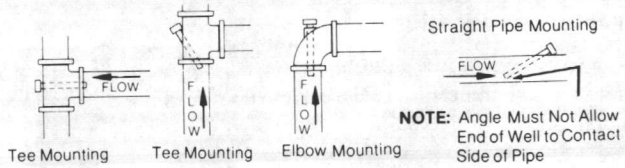

Installation Hardware and Application Limitations

Part No.	Description	Mtg. Fitting	Insertion Size	Applications Limitations at 250°F Fluid Temp.*		Installation Per Figure
				Max. Recommended Velocity (FPS)	Max. Recommended Static Press. (PSIG)	
AT-201	Copper Bulb Well**	3/4″ MNPT	1/2″ Dia. O.D. 9-1/2″ Long	11	250	5
AT-203	Stainless Steel Bulb Well**			20	500	
AT-206	Copper Bulb Well	1/2″ MNPT	1/2″ Dia. O.D. 4-1/2″ Long	11	250	5A
AT-209†	Bulb Mounting Kit	3/4″ MNPT	Length of Bulb	4	150	5

*Max. Recommended Fluid Temperature is 350°F.
**Requires AT-209.
†Recommended Installation is with a Bulb Well.

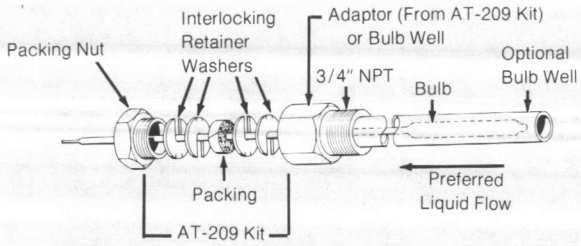

Figure 5. AT-201 or AT-203 Installation

Install bulb well or adaptor from AT-209 into 3/4" FNPT opening. Place packing nut, washers, and packing from AT-209 over bulb support section and insert bulb into well or AT-209 adaptor. Push interlocking washers and packing into well or adaptor and tighten packing nut until firmly seated.

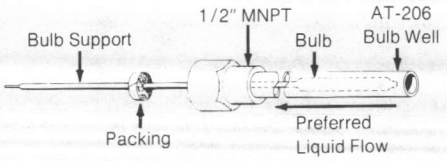

Figure 5A. AT-206 Installation

Install AT-206 bulb well into 1/2" FNPT opening. Place packing (included with AT-206) over bulb support section and insert bulb into well. Push packing into nut on well using a screwdriver.

Concealed Setpoint and Lock Cover Screw

Order AT-210 Concealed Adjustment Kit separately.

1. Peel off adhesive film from the concealed adjustment plate and place into the recess of cover.
2. Remove screw from cover.
3. Install lock cover screw provided with AT-210.

Wiring

The thermostat has one 1/2-inch to 3/4-inch conduit opening in bottom of housing. Make all electrical connections in accordance with the job wiring diagram and in compliance with national and local electrical codes. Terminal coding and switch action is shown in Figure 6, and Figure 7 shows two stage switching sequence.

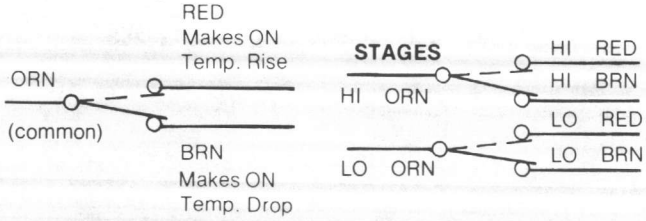

Figure 6. Terminal Coding and Switch Action

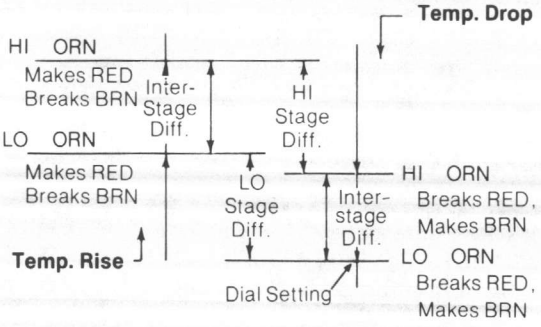

Figure 7. Two Stage Switch Sequence

Typical Applications

Figure 8 shows a typical heating or cooling application for single stage units. Figure 9 shows typical heating and cooling applications for two stage units.

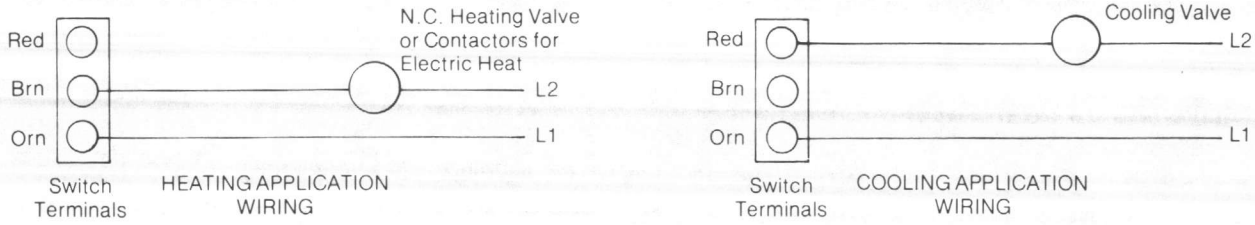

Figure 8. Typical Heating or Cooling Application for Single-Stage Units

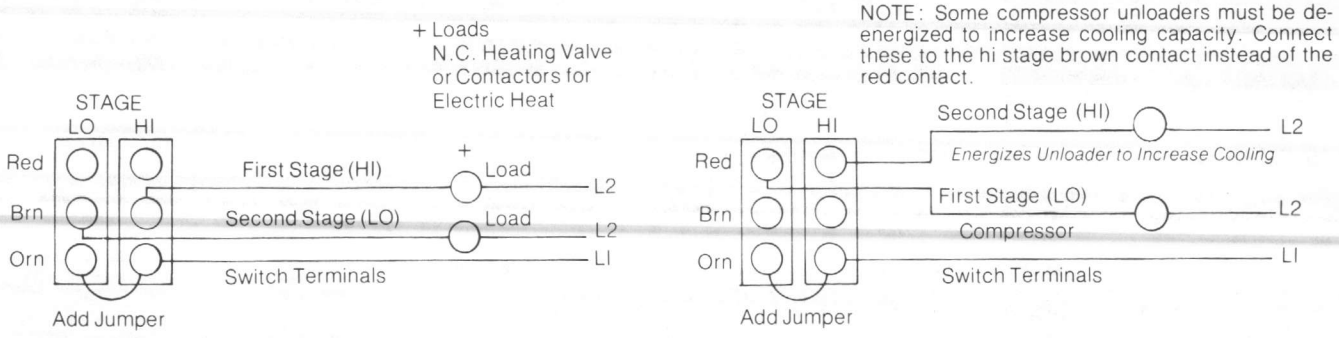

TYPICAL HEATING APPLICATION WIRING FOR TWO-STAGE UNITS

Figure 9

TYPICAL COOLING APPLICATION WIRING FOR TWO-STAGE UNITS

General Instructions

Power Demand Computers
PC-8402 and PC-8403
Pulse and Current Sensing

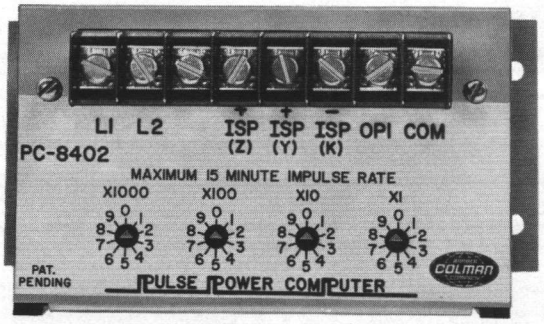

Pulse Power Computer
PC-8402

Current Probe
Power Computer
PC-8403

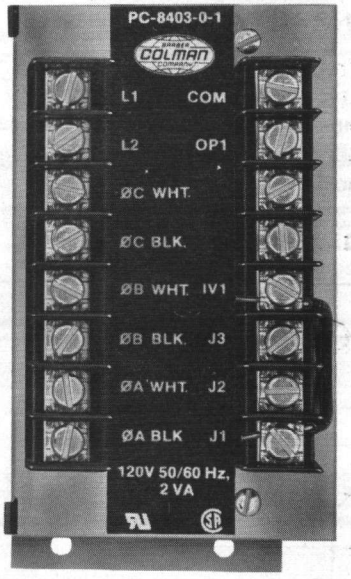

USES

With the supply of energy becoming critical and more expensive, we find the user employing energy management equipment to limit his usage and thus his costs. Many of these systems require a power transducer to provide a necessary power proportional signal. The PC-8402 and PC-8403 Power Computers supply this signal which can be applied to energy management systems recorders. These power computers are solid state electronic devices completely compatible with System 8000.

OPERATION

PC-8402

The PC-8402 Pulse Power Computer provides an output voltage of 1.5 to 10 Vdc in proportion to incoming power pulses generated by the utility company's isolation relays or other pulse signals. The computer will accept either a two-wire or three-wire alternating contact closure input. The PC-8402 sets its output voltage with respect to the number of pulses set on its dials and the rate of pulses currently applied to the device.

PC-8403

The PC-8403 current probe power computer provides an output voltage of 1.0 to 10 Vdc in proportion to the incoming current or currents from current transformers. These current transformers are located on the A, B or C phase lines of the secondary of the transformer supplying total building power. The computer will provide its output voltage with either 1, 2, or 3 current transformer inputs. The 3 current transformer inputs will provide the greatest accuracy in determining the total 3 phase system power. The PC-8403 sets its output voltage with respect to the level of input from the current transformers. The current transformer's maximum output must be five amperes with maximum rated input current.

FEATURES

PC-8402

1. Adjustable calibration from 0.1 to 11.1 pulse/second.
2. Single contact input (2-wire) or double contact alternating input (3-wire).
3. Output voltage linear with input pulses.

PC-8403

1. Adaptable to any power system through current transformer selection.
2. Operates on 1, 2 or 3 current transformer inputs.
3. Output voltage linear with input currents (1-5 amperes).

COMMON TO BOTH

1. Rugged plastic construction.
2. Small in size.
3. Easy-access screw terminal connections.
4. UL recognized.
5. Compatible with System 8000.

Table 1. Power Computer Selection Chart

Building Service			PC-8403 Current Probe Power Computer		PC-8402 Pulse Power Computer	
			Current Transformer Input	Power Signal	Input Signal	Power Signal
Voltage	Phase	Wires	Number of Current Transformers (Obtain Locally)	120 Vac +10 Vac -15 Vac 2 VA	Contact Closures from Isolation Relays (Obtain Locally) 2 or 3 Wire	120 Vac +10 Vac -15 Vac Less than 0.5 VA
Any	1	2	1			
	1	3	2			
	3	3	1, 2 or 3			
	3	4	1, 2 or 3			

PRE-INSTALLATION

Open the carton and visually inspect the device for part number and obvious damage before proceeding with the installation.

The four required mounting screws are not provided.

INSTALLATION

The power computers are designed for surface mounting. Locate these computers so they are not subjected to severe vibration, shock or ambient conditions. Ambient ratings are 40°F (4°C) to 140°F (60°C). Refer to Figure 1 for mounting hole dimensions.

DIMENSIONS

All Dimensions in Inches

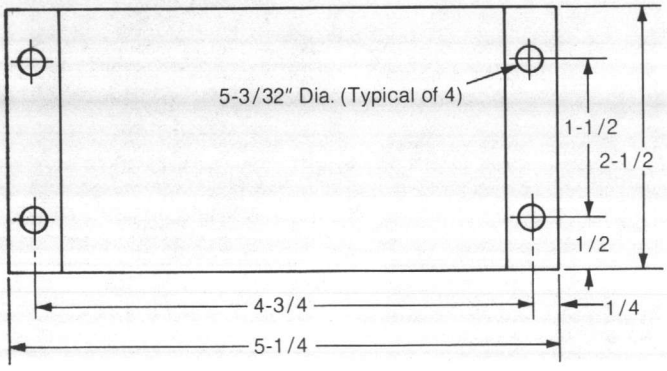

Base View — Shows mounting hole locations

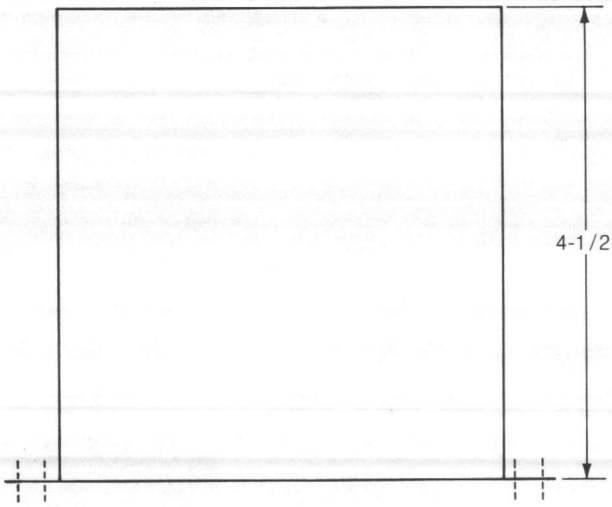

Side View — Maximum height shown here includes terminals

Figure 1.
Mounting Dimension for Both PC-8402 and PC-8403

INPUT

The PC-8402 Pulse Power Computer input wiring should be per Figure 2, using two or three 18 gauge wires. These wires do not have to be twisted or placed in conduit. The length may be up to 2500 feet.

OUTPUT

The PC-8402 output wiring should be per Figure 2 using 18 gauge twisted pair cable (6 turns per foot) or equivalent. Maximum distance of 1000 feet permissible. Never run leads in same conduit with line voltage.

CAUTION

Shielded cable (Belden 8422 or equivalent) must be used when it is necessary to install these OP1-COM signal leads in the same conduit with power wiring or when it is known that high RFI/EMI generating devices are near. Ground the shielded cable at the COM (-) terminal only.

Typical Wiring Connections for kW Pulse Signal Isolation Relays

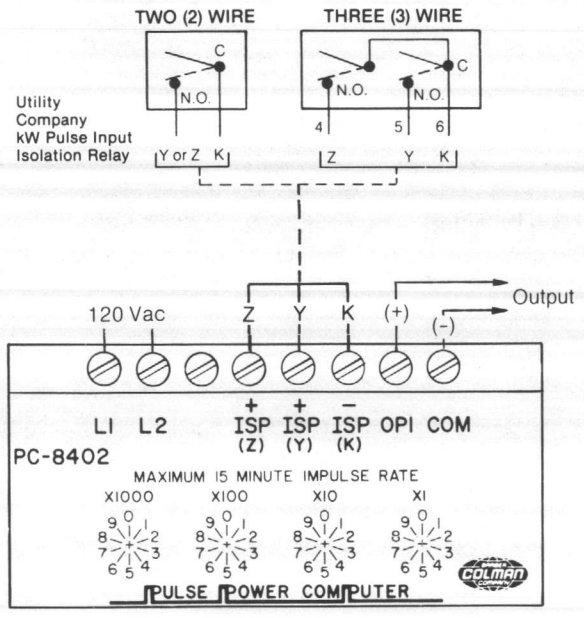

PC 8402 Pulse Power Computer Input Wiring

Caution
Minimum Dial Setting to be 200.

Figure 2. Typical Wiring Connections for PC-8402

PC-8402 PULSE POWER COMPUTER

WIRING

Make all connections in accordance with job wiring diagrams and in compliance with national and electrical codes.

CALIBRATION

There is no internal calibration for the PC-8402 pulse power computer.

FIELD ADJUSTMENT

Step 1. Determine the maximum number of pulses in the demand period.

Step 2. Calculate the number of pulses this rate will give in 15 minutes. (Example: No. 1 is 3000 in 30 minutes, No. 2 will be 1500.)

Step 3. Set dials to 1500 left to right. (See Figure 3.) Minimum setting is 200.

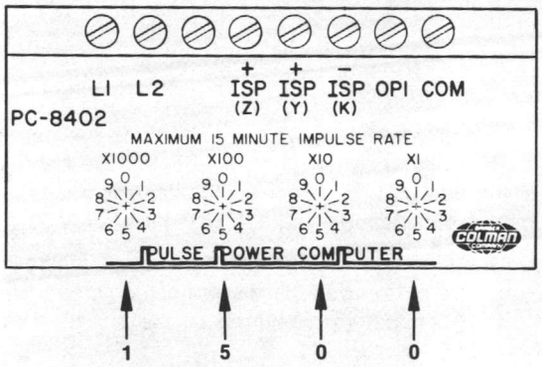

Figure 3.

CHECKOUT

The computer can be checked out by putting into the ISP+ and ISP- terminals the number of contact closures that are shown on the four dials in a 15 minute period of time. The unit must be powered by 120 Vac 50/60 Hz. The output from OP1 and COM will be 10 ±.2 Vdc under these conditions.

SERVICE

There is no field service for this unit. If defective, return to factory for repair.

PC-8403 CURRENT PROBE POWER COMPUTER

WIRING

Make all connections in accordance with job wiring diagrams and in compliance with national and electrical codes.

INPUT

The PC-8403 Current Probe Computer input wires from the current transformers should be wired per Figure 4 and are to be kept shorted together until installed on the terminals.

Distance vs. wire gauge for the leads between the current transformer and the PC-8403 are as follows:

Table 2.

Distance in Feet	Wire Gauge
200	#14
320	#12
500	#10
800	# 8

Jumper wires should be placed on the proper terminals depending on the particular system being measured. These wires must be installed to make the computer operate.

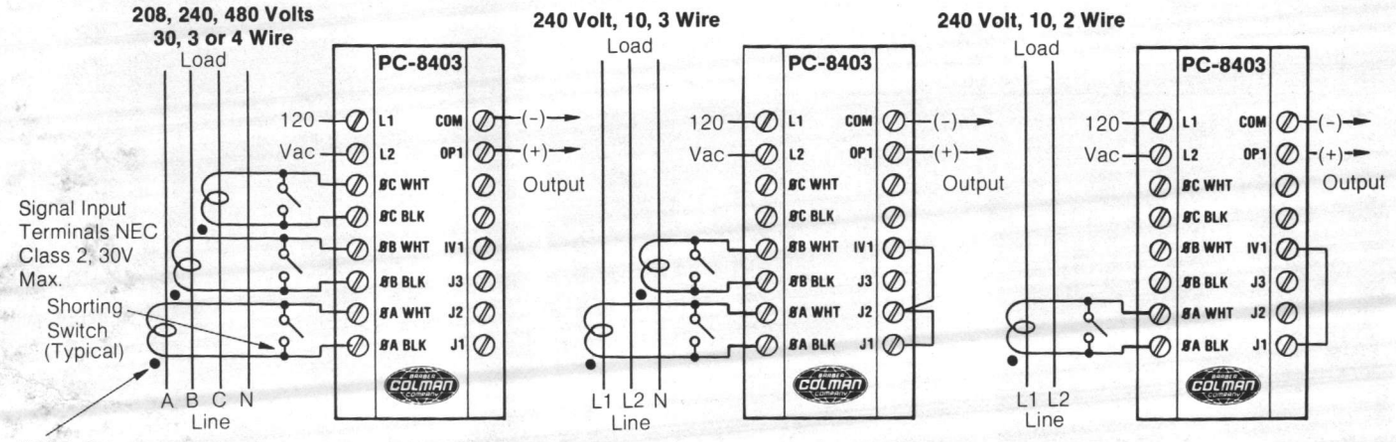

NOTE: Dot on current transformers should face line side unless otherwise noted.

Current Sensing Options

1. 0A, 0B, 0C— Jumper J1, J2 and J3 to IV1.
2. 0A, 0B — Jumper J1 and J2 to IV1.
3. 0A — Jumper J1 to IV1.

CAUTION: Electric shock hazard. CT secondaries must never be open when attached to service conductors. Install shorting switch on CT secondaries to permit removal of CT leads from PC-8403 during servicing.

Figure 4. Typical Wiring Connections for Load Current Sensing PC-8403

OUTPUT

The PC-8403 output wiring should be per Figure 4 using 18 gauge twisted pair cable (6 turns per foot) or equivalent. Maximum distance of 1000 feet permissible. Never run leads in same conduit with line voltage.

CAUTION

Shielded cable (Belden 8422 or equivalent) must be used when it is necessary to install these OP1-COM signal leads in the same conduit with power wiring or when it is known that high RFI/EMI generating devices are near. Ground the shielded cable at the COM (-) terminal only.

Table 3. Current Transformer Selection Chart

Maximum Building kW	Current Transformer Ratio				
	208V 30	240V 30	480V 30	240V 10 2 Wire	240V 10 3 Wire 2 Cts Required
50	125/5	125/5	—	200/5	100/5
100	250/5	250/5	125/5	400/5	200/5
150	400/5	400/5	200/5	600/5	300/5
200	500/5	500/5	250/5	800/5	400/5
250	700/5	600/5	300/5	1000/5	500/5
300	800/5	700/5	350/5	1200/5	600/5
350	900/5	800/5	400/5	1500/5	700/5
400	1000/5	1000/5	500/5	1600/5	800/5
450	1200/5	1000/5	600/5	1800/5	900/5
500	1500/5	1200/5	600/5	2000/5	1000/5
550	1500/5	1500/5	700/5	2500/5	1200/5
600	1600/5	1500/5	700/5	2500/5	1200/5
650	1800/5	1500/5	800/5	2500/5	1500/5
700	2000/5	1600/5	800/5	3000/5	1500/5
750	2000/5	1800/5	900/5	—	
850	2500/5	2000/5	1000/5	—	
900	2500/5	2000/5	1000/5	—	
1000	3000/5	2500/5	1200/5	—	
1300		3000/5	1600/5	—	
1500			1800/5	—	
1700	—		2000/5	—	
2100	—		2500/5	—	
2500	—		3000/5	—	

CALIBRATION

There is no calibration for the PC-8403 current probe power computer.

CHECKOUT

The current probe power computer can be checked out by applying 5 amps RMS ac to any of the three desired current transformer inputs (see Figure 4) and jumpering the IV1 terminal to the corresponding phase input J1, J2 or J3. The output OP1 to COM should measure 10 ±.2 Vdc. Lower RMS currents will produce proportionally lower voltage outputs. See Figure 3.

SERVICE

It is necessary to follow the procedure below if PC-8403 is to be disconnected for servicing.

Step 1. Open all disconnects which provide power to the panel in which PC-8403 is installed.

Step 2. Close the switch provided for shorting the current transformer secondaries. This switch should have been installed by the local utility company or electrical contractor and will be located outside the panel containing the PC-8403.

If a current transformer shorting switch has not been installed, it will be necessary to open the disconnect which supplies current to the conductors monitored by the current transformers.

Step 3. CAUTION: ELECTRIC SHOCK HAZARD! DO NOT REMOVE THE CURRENT TRANSFORMER WIRING ATTACHED TO THE 0A, 0B, OR 0C TERMINALS UNTIL THE CT SECONDARIES ARE SHORTED OR NO CURRENT IS FLOWING IN THE CONDUCTORS MONITORED BY THE CURRENT TRANSFORMERS.

Step 4. PC-8403 can now be removed for replacement.

Step 5. Install the new PC-8403. Connect all wiring to appropriate terminals.

Step 6. Be certain that the current transformer secondaries are connected to PC-8403. Open the CT shorting switch.

Step 7. Close the panel disconnect to place PC-8403 back in service.

Barber-Colman Company
ENVIRONMENTAL CONTROLS DIVISION
1300 Rock Street, Rockford, Illinois, U.S.A., 6110

General Instructions

Solid State Sensing
Temperature and Humidity
Series TS-8000 and HS-8000

Temperature Sensing

GENERAL INFORMATION

Sensing is accomplished by the use of a temperature sensitive Balco resistance wire packaged in the form of room, duct, averaging and outdoor type configurations. The design of the entire system is around a 1000 Ω sensing element at 70°F.

WIRING

Make all electrical connections to the element in accordance with the installation and wiring diagram for the job. Comply with national and local electrical codes. Do not use the element box as a junction box for other control circuits. It is generally advisable to use flexible conduit for connecting box to rigid conduit. Restrict element leads to shortest length practical. Barber-Colman twisted cable or factory approved cable should be used.

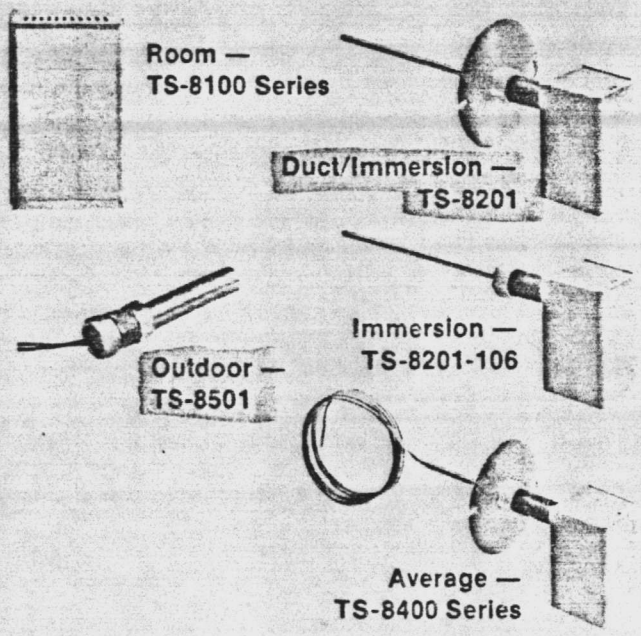

Part No.	Use	Location	Mounting	Terminal Code Wiring
TS-8101	Room Sensor w/o Setpoint	Wall		⑦ } Output ⑧ } Terminals
TS-8111	Room Sensor w/Setpoint	Wall		
TS-8201	Duct Immersion 7" Immersion Length	Duct or Well AT-215 3/4" NPT	AT-215 Thermowell Immersion Temperature 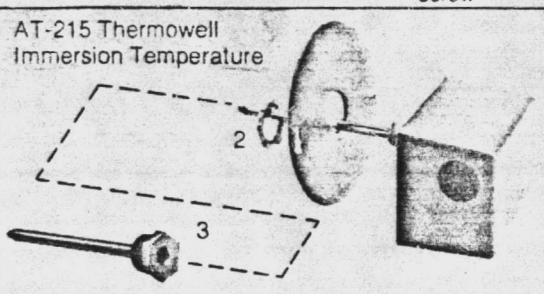	Pigtails: Black } (C) Controlling Black } Black } (L)* Controlling Black } *Found only on the TS-8331
TS-8201 -106	immersion 4" Insertion Length	Well AT-225 1/2" NPT		
TS-8331	Lagged Sensor	Duct		
TS-8405	5' Average	Duct	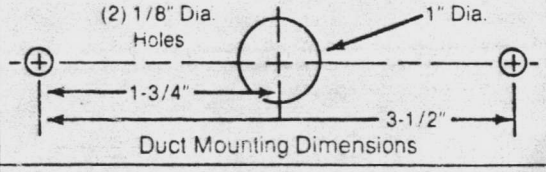 Duct Mounting Dimensions	
TS-8422	22' Average	Duct		
TS-8241	Diffuser	Ceiling	Mount on Face of Ceiling Diffuser. See Instructions for B-C Models PB, PS or SFS, SFB. Pg 2	Pigtails: Black Black
TS-8261	Light Fixture	Light Fixture	Mount in Return Grill of Light Fixture	Pigtails: Black Black
TS-8501	Outdoor Air	Outside of Building	Use Conduit Connectors	Pigtails: Black } Controlling Black }
TS-8531	Solar	Outside of Building		Orange } Element Orange } (Solar)
TS-8533	Econostat	Outside of Building		Red } Heater Red } (Econostat)

LITHO IN U.S.A.

General Instructions

MA-305
MA-318
MA-405 THRU MA-419
Oil Submerged Actuators

For two-position operation of dampers, valves and other equipment which requires the return to normal position upon power interruption.

SPECIFICATIONS

Two-wire circuit. Actuator shaft rotates cw 180° when power is applied. Spring returns actuator shaft ccw to original position when actuator is de-energized. Optional SPDT auxiliary end switch makes (or breaks) circuit at powered end of stroke. Ambient temperature limitations -40 to 136°F (-40 to 58°C). 16 lb-in. (1.8 N-m) actuators mounted in any position; 60 lb-in. (6.8 N-m) must be mounted with output shaft horizontal. Allow 6"(152 mm) clearance above the actuator wiring compartment.

ACCESSORIES

Damper linkage accessories:

AM-111	Crank arm for 5/16" diameter damper shaft.
AM-112	Crank arm for 3/8" diameter damper shaft.
AM-113	Crank arm for actuator or 1/2" diameter damper shaft.
AM-115	Crank arm for 7/16" diameter damper shaft.
AM-116	Splined crank arm for actuator.
AM-122	Linkage connector straight type.
AM-123	Damper clip.
AM-125	5/16" diameter × 20" damper rod.
AM-125-048	5/16" diameter × 48" damper rod.
AM-132	Ball joint connector.
AM-301	90° mounting bracket.
AM-401	Explosion proof housing for damper or valve.

Valve linkage accessories for 60 lb-in. units only. Use on VB-9213, VB-9253, VB-9273, VB-9313 and VB-9323 valve bodies 1/2" to 2".

*AV-390	Common parts linkage kit.
*AV-91	Cam and plunger kit for 1/2" to 1-1/4" valves.
*AV-92	Cam and plunger kit for 1-1/2" to 2" valves.

*Order AV-390 plus appropriate AV-91 or AV-92 for complete linkage.

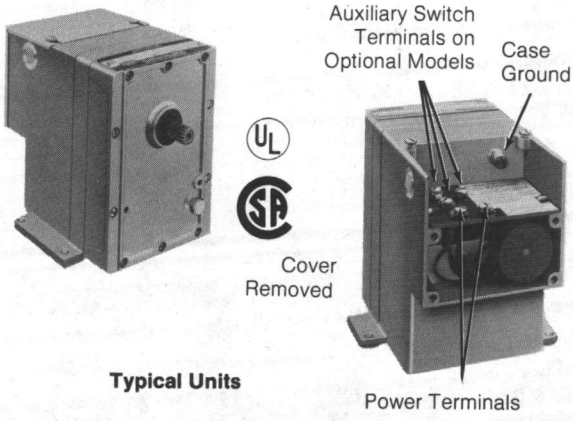

Typical Units

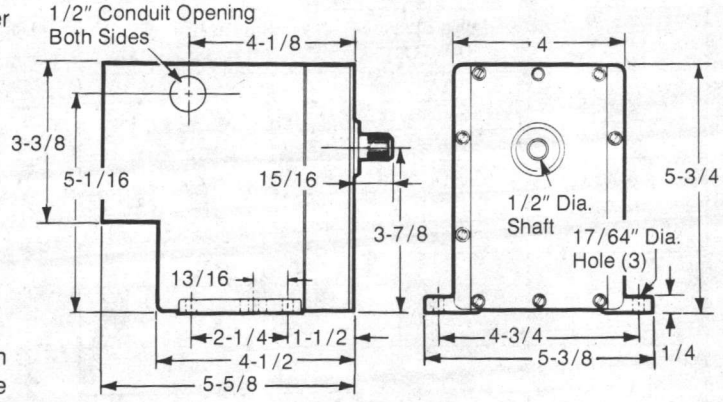

All Dimensions in inches
1" = 25.4 mm

OPTIONS

Available 120, 208, 240 Vac; 50 or 60 Hz.

Actuator Part Number	Power Supply (Vac) 60 Hz	Aux.* Switch	Input (Watts)	VA		Rated Torque Lb-In. (N-m)	No Load Timing† at 75°F (24°C) Secs/180°	Nominal** Damper Area Sq. Ft. (m^2)		Applications
				Running	Holding			Parallel	Opposed	
MA-305	24	No	25	56	56	16 (1.8)	20	9 (.8)	11 (1)	Damper
MA-305-500	24	Yes								
MA-405	120	No		48	48					
MA-405-500	120	Yes								
MA-406	208	No		63	63					
MA-406-500	208	Yes								
MA-407	240	No		48	48					
MA-407-500	240	Yes								
MA-318	24	No	70 Running 25 Holding	92	32	60 (6.8)	20	33 (3.1)	43 (4)	Valve or Damper
MA-318-500	24	Yes								
MA-418	120	No		108	42					
MA-418-500	120	Yes								
MA-416	208	No		104	38					
MA-416-500	208	Yes								
MA-419	240	No		120	39					
MA-419-500	240	Yes								

*2 FLA, 12 LRA @ 24/120 VAC; 1 FLA, 6 LRA @ 240 VAC.
**Damper Ratings are Nominal and based on Standard (Not Low Leakage) Dampers at 1" W.C. Pressure and 2000 FPM Velocity.
†Spring Return Timing with Full Load Opposing Spring approximately 60 Sec.

LITHO IN U.S.A. 10-84

THEORY OF OPERATION

Run/Adjust

MA-305, 405, 406 and 407 units rotate 180° clockwise when energized and spring return counterclockwise to 0° when de-energized. The motor is assembled to a gear train and stalls at the end of the power stroke.

MA-318, 416, 418 and 419 have an end of travel switch which reduces the running input from 70 watts to 25 watts at the end of the clockwise rotation. Actuator must be linked to the load (i.e. damper), to allow the actuator on power stroke, full end of travel movement.

INSTALLATION

Procedure

Wiring Make all electrical connections in accordance with the job wiring diagram and in compliance with national and local electrical codes. Two 1/2-inch conduit knockouts are provided on actuator case.

Power Wire Selection Table

Actuator	Wire Size (AWG)	Maximum Run (Ft.) (1 run has 2 wires)
MA-305	14	122
	12	191
	10	305
MA-405	14	2800
MA-406	14	2800
MA-407	14	2800
MA-318	14	44
	12	68
	10	110
MA-416 MA-418 MA-419	14	950
	12	1580

Opposite each model number and wire size is the maximum 2 wire run in feet for one actuator. To determine the maximum run when multiple actuators are used, divide the number of actuators into the corresponding maximum run.

Typical wiring for MA-305, 405, 406 and 407:

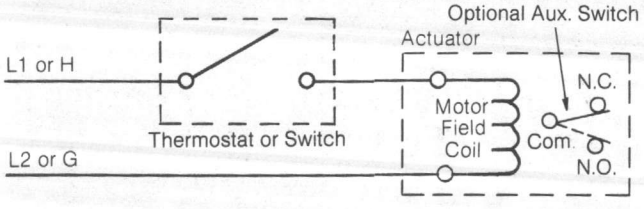

Actuator rotates 180° cw when controller contacts are closed. Actuator spring returns when controller contacts are open.

Typical wiring for MA-318, 416, 418 and 419:

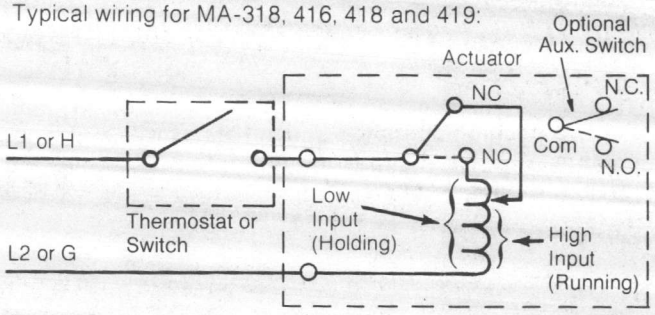

Damper Installation Figure above illustrates linkage for a 180° actuator operating an arm through a 90° arc. To fasten linkage proceed as follows:

1. Fasten linkage connector at end of driven crank shaft arm.
2. Fasten linkage connector at punch mark on actuator crank arm (about .707 of the radius).
3. Move damper to normal position and clamp connecting link to connectors.
4. Check adjustment for proper operation by running actuator and driven shaft between limits of travel.

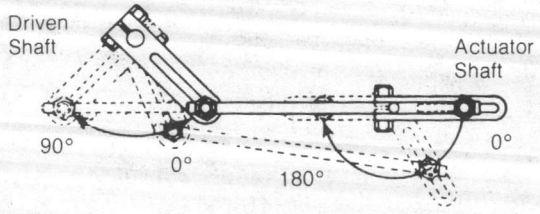

CAUTION

If crank arm does not provide proper travel, reset connecting link in linkage connector. NEVER ATTEMPT TO TURN THE ACTUATOR SHAFT WITH A WRENCH OR A CRANK. This may damage actuator gears.

Valve Installation The valve must be installed with the valve stem upright. Install all single-seat valves (unless directional arrow indicates otherwise) with pressure under the seat.

See AV-300 General Instruction sheet F-19068 for detailed instructions when used as valve actuator.

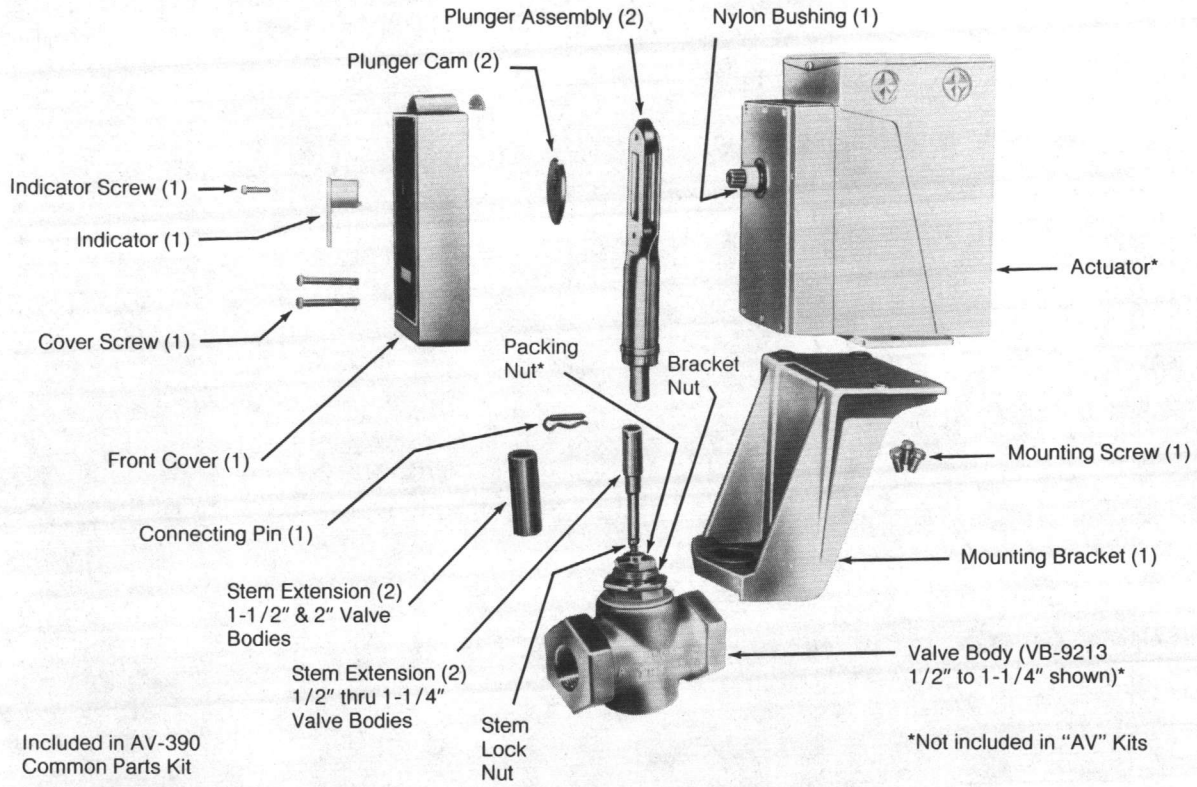

(1) Included in AV-390 Common Parts Kit

(2) Included in AV-91, AV-92, AV-93 or AV-94 Plunger and Cam Kit

*Not included in "AV" Kits

Figure 5

TYPICAL COMPONENTS FOR VALVE INSTALLATION

CHECKOUT

After the entire system has been installed, the following checks for proper operation can be made.

1. Be sure that the system power is connected and on.
2. Be sure controller (manual or automatic) is operating properly per system requirements.
3. When the controller (manual or automatic) energizes the actuator it will run to the end of the stroke (180° clockwise).
4. When the controller (manual or automatic) de-energizes the actuator, the spring will return the actuator shaft to its original position.
5. Action of auxiliary switch:
   - C made to N.C. when actuator is de-energized.
   - C made to N.O. when actuator is energized and reaches the end of stroke.

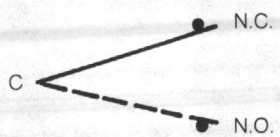

Auxiliary Switch

MAINTENANCE

A minimum of maintenance is required since the motor and gear train are submerged in oil for continuous lubrication and cooling and sealed in a die cast case. If necessary to refill the actuator with oil, always use Barber-Colman immersion oil, which is available in quart or one gallon cans (refill capacity — approximately 3/4 of a quart).

Normally, actuators are returned to the factory for reconditioning if the need arises. However, some field repairs can be performed. Replacement of gear train parts or return springs should not be attempted in the field. Refer to the repair parts list for parts and kits available.

Barber-Colman Company
ENVIRONMENTAL CONTROLS DIVISION

1354 Clifford Avenue
P.O. Box 2940
Loves Park, IL U.S.A. 61132-2940

F-6491-16 BK

LITHO IN U.S.A.

General Instructions

TC-1101, TC-1102, TC-1103, TC-1104, TC-1105
Electric Room Thermostats
Two-Position

For low or line voltage on-off control of fan coils, fans, motor starters and contactors, two-position electric actuators.

Bimetal operated snap action SPDT switch. Color coded 6" (152 mm) leads. Differential 2°F (1°C). Units have beige plastic covers as standard. Mounts on flush or surface switch box or directly to wall (24 volt only).

Dimensions: 4-3/8" (111 mm) high × 2-7/8" (73 mm) wide × 1-5/8" (41 mm) deep.

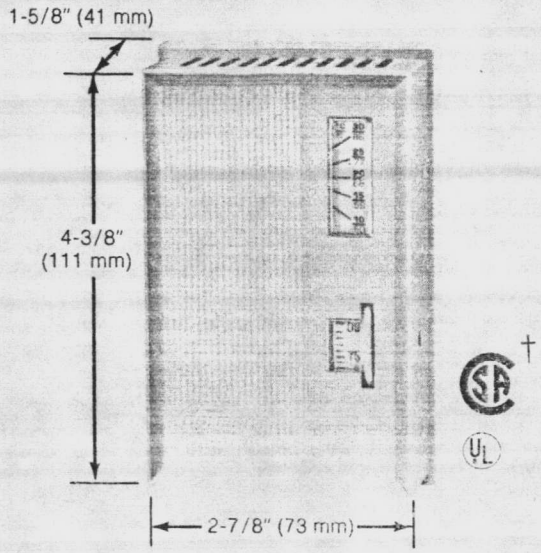

ACCESSORIES

AT-101	Lock cover kit
AT-104	Dial stop pins (pins included with each unit)
AT-136	Title plates (day, night, heat, cool)
AT-504	Plaster hole cover (small)
AT-505	Surface mounting base
AT-546	Auxiliary mounting plate
AT-602	Selector switch sub-base DP4T
AT-603	Selector switch sub-base one DP4T, one DPDT
AT-1103	Wire guard
AT-1104	Cast aluminum guard
AT-1105	Plastic guard
AT-1155	Plastic guard
AT-1165	Plastic guard
Tool-11	Calibration wrench
Tool-13	Contact burnishing tool

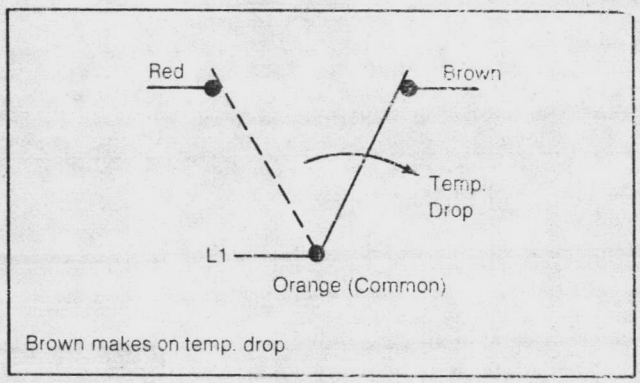

Brown makes on temp. drop

OPTIONS

Add "dash-number" (-XXX) suffix to base part number for desired option. For metal covers, specify TC2-110X-XXX. All configurations are UL listed. For models used in applications requiring series heat anticipators, contact factory.

† Only models with metal covers are CSA certified.

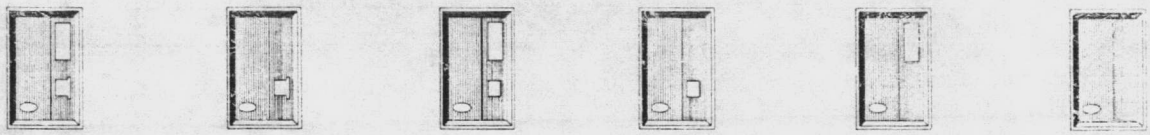

-500 parallel heat anticipation 24V Standard Cover
-501 parallel heat anticipation 120V Standard Cover
-502 parallel heat anticipation 240V Standard Cover
-601 10°F night depression 120V Standard Cover ††
-602 10°F night depression 24V Standard Cover ††
-603 10°F night depression 240V Standard Cover ††

††Normally, night depression is controlled by a centrally located time clock such as AE-174 or AE-178, or by selector switch sub-bases (AT-602 or AT-603).

Part Number	Control Dial Range*	Full Load Amps		Locked Rotor Amps		Pilot Duty (VA)
		24/120 Vac	240 Vac	24/120 Vac	240 Vac	
TC-1101	55 to 85°F (13 to 29 °C)	4.4 Orange to Brown Lead	2.2 Orange to Brown Leads	26.4 Orange to Brown Lead	13.2 Orange to Brown Leads	40 @ 24 Vac
TC-1102	45 to 75°F (7 to 23°C)					
TC-1103	75 to 105°F (24 to 40°C)	3.0 Orange to Red Lead	1.5 Orange to Red Leads	18 Orange to Red Lead	9 Orange to Red Leads	210 @ 120/240 Vac
TC-1104	35 to 65°F (2 to 18°C)					
TC-1105	90 to 120°F (32 to 49°C)					

*Units marked in both °F and °C; dial stop pins included to limit dial range.

LITHO IN U.S.A. 7-84

INSTALLATION

Requirements

Thermostats require upright mounting on a properly flat vertical surface. Locate the thermostat where it will be exposed to unrestricted circulation of air which represents the average temperature of the controlled space.

CAUTION

Do not locate the thermostat near sources of heat or cold, such as lamps, motors, sunlight or concealed ducts or pipes, or where there is a danger of electrocution (ie., shower rooms).

The thermostat is designed for service in any normally encountered human environment.

Procedure

1. Pull all wires. (Use copper wire only.)
2. Make electrical connections to thermostat. Make all connections in accordance with the job wiring diagram and in compliance with national and local electrical codes. Class I wiring is required unless all circuits to contacts are powered from a Class II source. (See Page 3 for additional wiring diagrams.)
3. Remove thermostat cover and fasten thermostat to box or wall.
4. Attach thermostat cover.

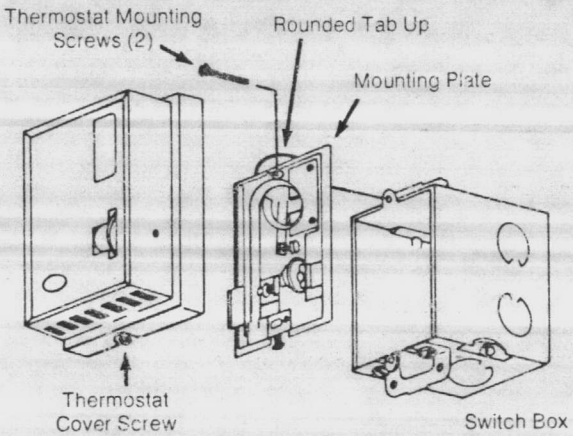

CHECKOUT

After installing a thermostat, make an initial check of the switching action. Verify the switch action by listening to and watching the switch contacts or by using a voltmeter between the proper sides of the switch.

1. Run the setpoint dial to a temperature above ambient. This should cause the thermostat to make a circuit between orange and brown leads.
2. Turn the setpoint dial setting down below ambient. This should cause the thermostat to make a circuit between orange and red leads.

CALIBRATION

All thermostats are precision calibrated at the factory and normally will not require any further attention. However, if recalibration is necessary, proceed as follows:

1. Turn off control power and power to night depression circuit, where applicable.
2. Set setpoint dial to correspond to actual stable room temperature, as read from an accurate thermometer.
3. Remove thermostat cover. Do not breathe on the thermostat or handle excessively as this will affect the accuracy of the final calibration.
4. If contact blade is made to the left (red) contact, with a small screwdriver, turn calibration screw counterclockwise (looking at head of screw) until blade makes to right (brown) contact.

Note

Each complete turn of screw changes calibration approximately 15°F (8°C).

Now turn screw very slowly clockwise until blade just makes the left (red) contact. Thermostat is now properly calibrated.

If contact blade is originally made to the right (brown) contact, turn calibration screw slowly clockwise until element just makes the left (red) contact. Thermostat is now properly calibrated.

5. Replace thermostat cover.
6. Turn on control power.
7. Recheck calibration about 30 minutes later to be sure heat from handling of or breathing on bimetal element did not result in an erroneous setting.

MAINTENANCE

This is a quality product. Regular maintenance of the total system is recommended to assure sustained optimum performance.

Open areas at bottom and around base of thermostat should be kept clean and free from obstructions to allow proper flow of air. If switch contacts need cleaning, this may be done with Tool #13 (burnishing tool).

NOTE

Thermostat may require calibration after cleaning contacts.

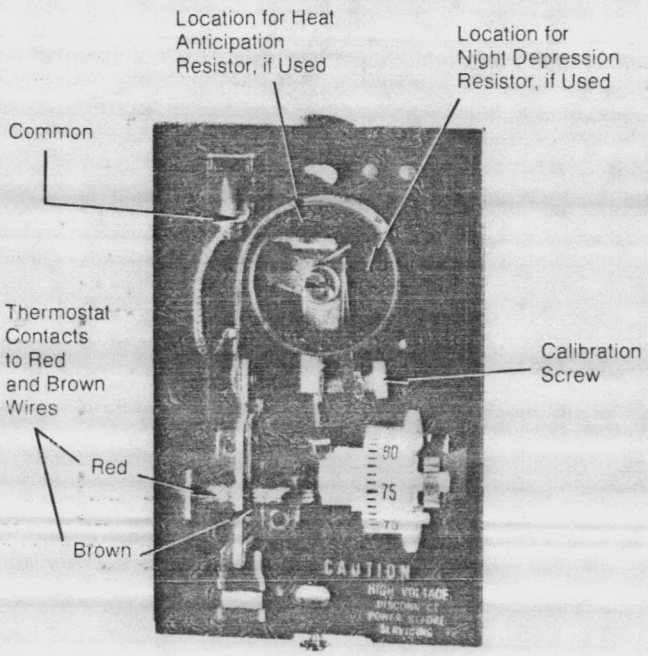

REPAIR

Field repair of the thermostat is not recommended. The thermostat should be replaced, if the system is not operating correctly and the reason is traced to the thermostat.

Typical of Parallel Heat Anticipation (heater size determined by voltage) with or without Night Depression

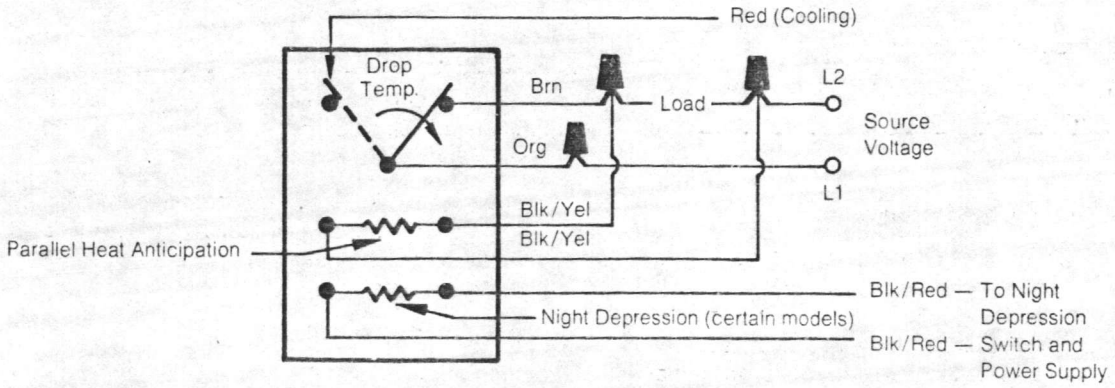

Typical of Series Heat Anticipation (heater size determined by ampere rating of load) with or without Night Depression

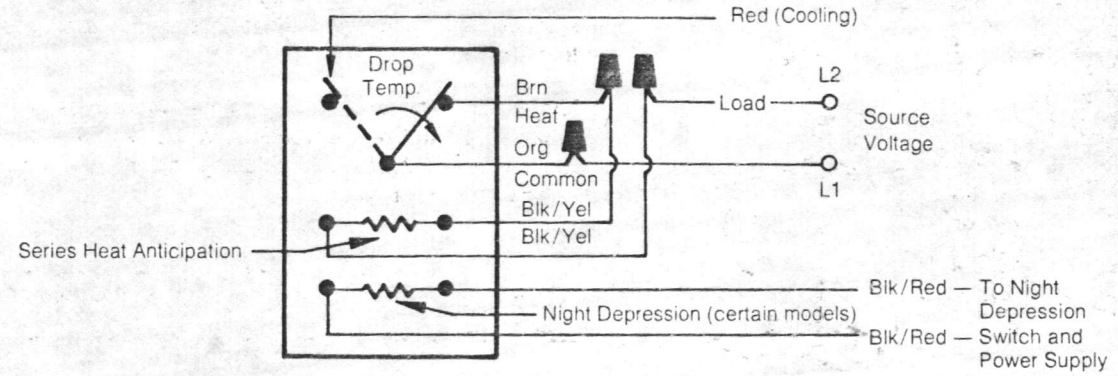

Typical Night Depression

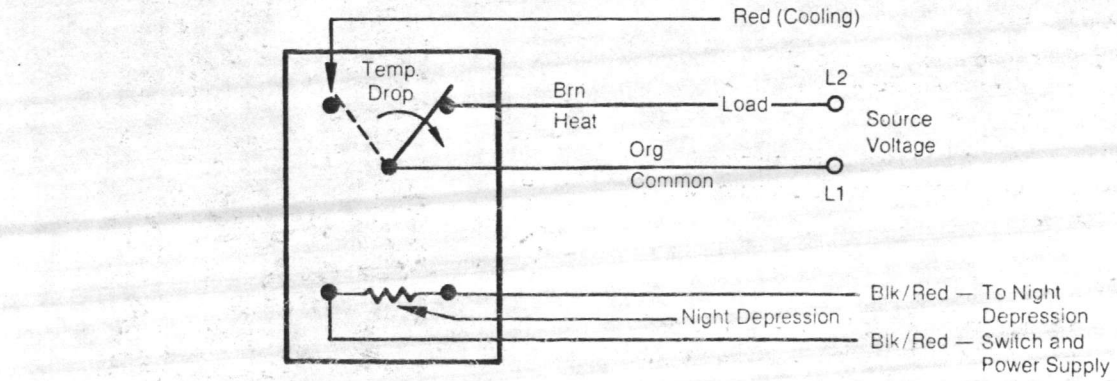

Barber-Colman Company
ENVIRONMENTAL CONTROLS DIVISION

1354 Clifford Avenue
P.O. Box 2940
Loves Park, IL U.S.A. 61132-2940

F-18785-2 BK

LITHO IN U.S.A

WATER FLOW METER

TR-1

I. Introduction

The [redacted] is a Digital to Analog (D to A) converter designed to operate in conjuction with a Data Industrial flow sensor. The unit can be easily recalibrated in the field by using a Data Industiral Model 900 or Model 950 Digital Display as a tool, and can provide the following analog signals with the simple repositioning of a selection jumper bar.

Selectable Analog Outputs:

1. [redacted]
2. 0-1 volt
3. 0-5 volts
4. 0-10 volts

The overrange limits and output impedance for each of these output forms can be found under Product Spcification, (Section IV). The D to A converter is a 4-wire design wherein the analog output is isolated from the power supply.

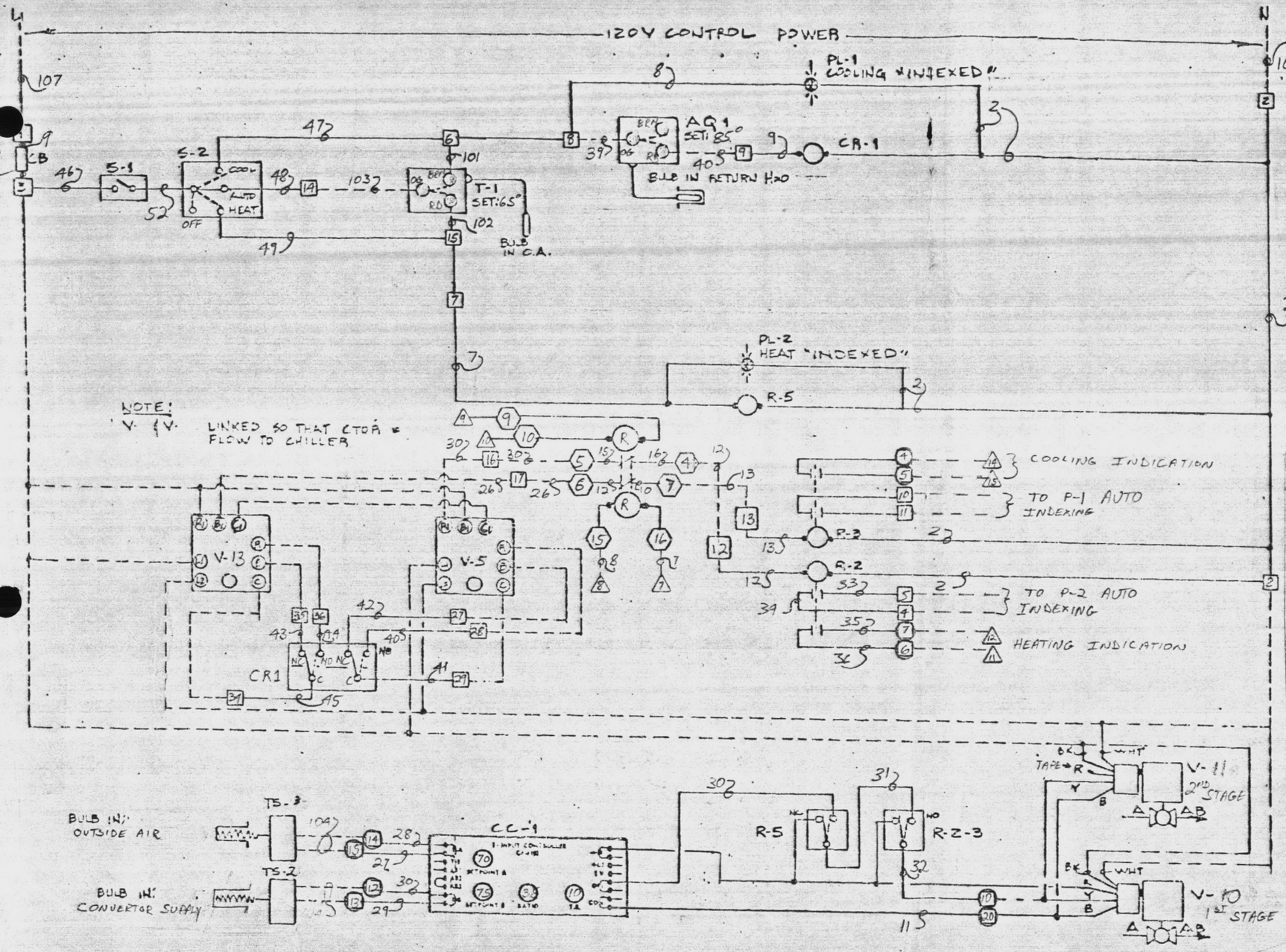

SYSTEM CHANGEOVER INDEXING AND CONVERTER CONTROL

(LOCATED IN MECH. EQUIP. BLDG. - (1) SET REQ'D.)

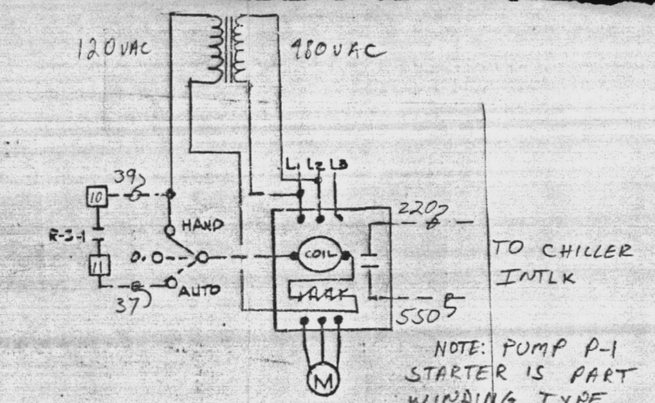

NOTE: PUMP P-1 STARTER IS PART WINDING TYPE

PUMP- P-1 CONTROL

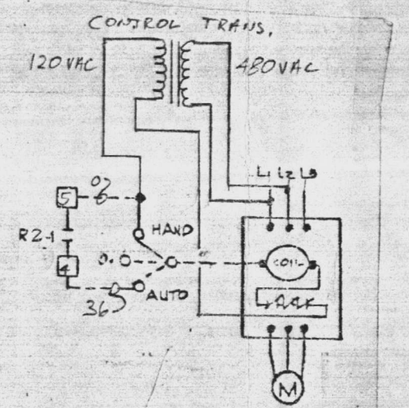

PUMP- P-2 CONTROL

LEGEND

- WIRING EXTERNAL TO CONTROL PANEL
- WIRING INSIDE CONTROL PANEL
- LINE VOLTAGE TERMINAL IN CONTROL PANEL
- LOW VOLTAGE TERMINAL IN CONTROL PANEL
- DTC PANEL TERMINAL
- DTC INTERFACE PANEL TERMINAL
- 17 WIRE NUMBER

Jay Johnson Company, Inc. — A Sales Representative for Barber-Colman — 1612 Dixie Trail, Raleigh, NC 27607	JOB NAME, LOCATION: UNACCOMANIED ENLISTED PERSONNEL HOUSING, # B-224 CAMP LEJEUNE, NC	
CONTRACTOR: RAMSEY AIR CONDITIONING	DATE: 2-6-86	DRN. BY NEG
REVISIONS: 2/6/86 AS BUILT	TC-4497 / E-927	SHT. 1 OF 1

IV. SPECIFICATIONS

A. General

1. Operating Temperature Range:	from -0°C to +55°C
2. Storage Tempreature Range:	from -40°C to +70°C
3. Power Requirements:	[redacted] (.2VA) and 24VAC (2VA), 50/60hz
4. Sensor Input Requirements:	from -0 to 8 volts, typical no rise limits, compatable with DATA INDUSTRIAL 220 series sensors
5. Span Adjustment Range:	from -6hz to 70hz
6. Linearity	less than 1%
7. Output Response Time:	6 seconds (typical); 10% to 90% step response
8. Designed Output Ripple:	less than 0.25% of full scale; System output ripple may exceed this value due to the dynamics of the application.

B. 4-20ma Configuration

1. Output Impedance:	greater than 1 Meg Ohm shunted by 1 microfarad
2. Output Compliance:	22 volts (typical); 0-1100 ohms
3. Maximum Output Current:	35ma (max)

C. 0-1 Volt Configuration

1. Output Impedance:	62 ohms (typical) shunted by 1 microfarad
2. Overrange Output Voltage:	2.2 volts (max)

D. 0-5 Volt Configuration

1. Output Impedance:	330 ohms (typical) shunted by 1 microfarad
2. Overrange Output Voltage:	12 volts (max)

E. 0-10 Volts Configuration

1. Output Impedance:	620 ohms (typical) shunted by 1 microfarad
2. Overrange Output Voltage:	22 volts (max)

SENSORS

A. Types

Data Industrial provides several basic sensor configurations using the same impeller element. This allows a wider range of applications and pipe sizes. The following is a list of the sensors and application parameters.

- Model 220B - This is the standard brass sensor used in all pipe sizes from 3 inches (76.3mm) to 99.9 inches (2537.5mm) in diameter. It is mounted into the pipe with the use of a welded-on 2" NPT threaded opening. The pressure and temperature ratings are diagramed below:

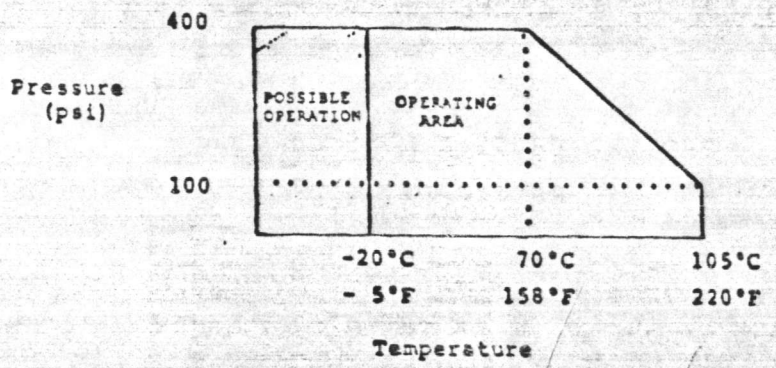

- Model 220SS - This is the same as Model 220B except that the sensor is made from 316 stainless steel. The temperature and pressure characteristics are the same as the Model 220B.
- Model 220P - This consists of a modified PVC tee into which a removable, glass-filled nylon sensor is inserted. Discrete sizes of 1 inch, 1½ inches, 2, 3 and 4 inches are available. Specify the pipe size when ordering by using a dash number such as 220P-1, 220P-1½ or 220P-2, etc. This sensor has the following temperature/pressure rating:

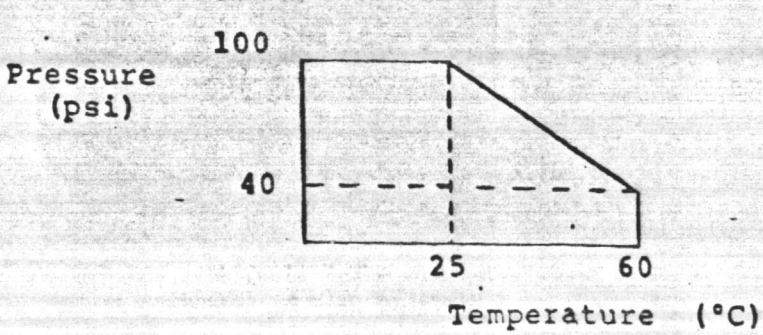

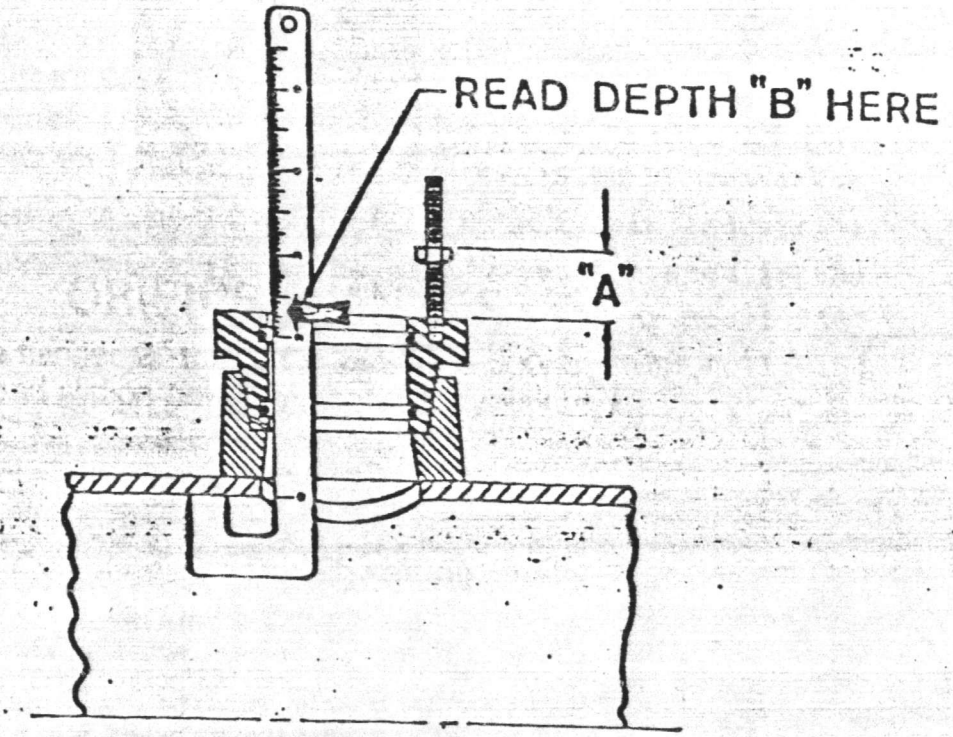

Figure 7 A

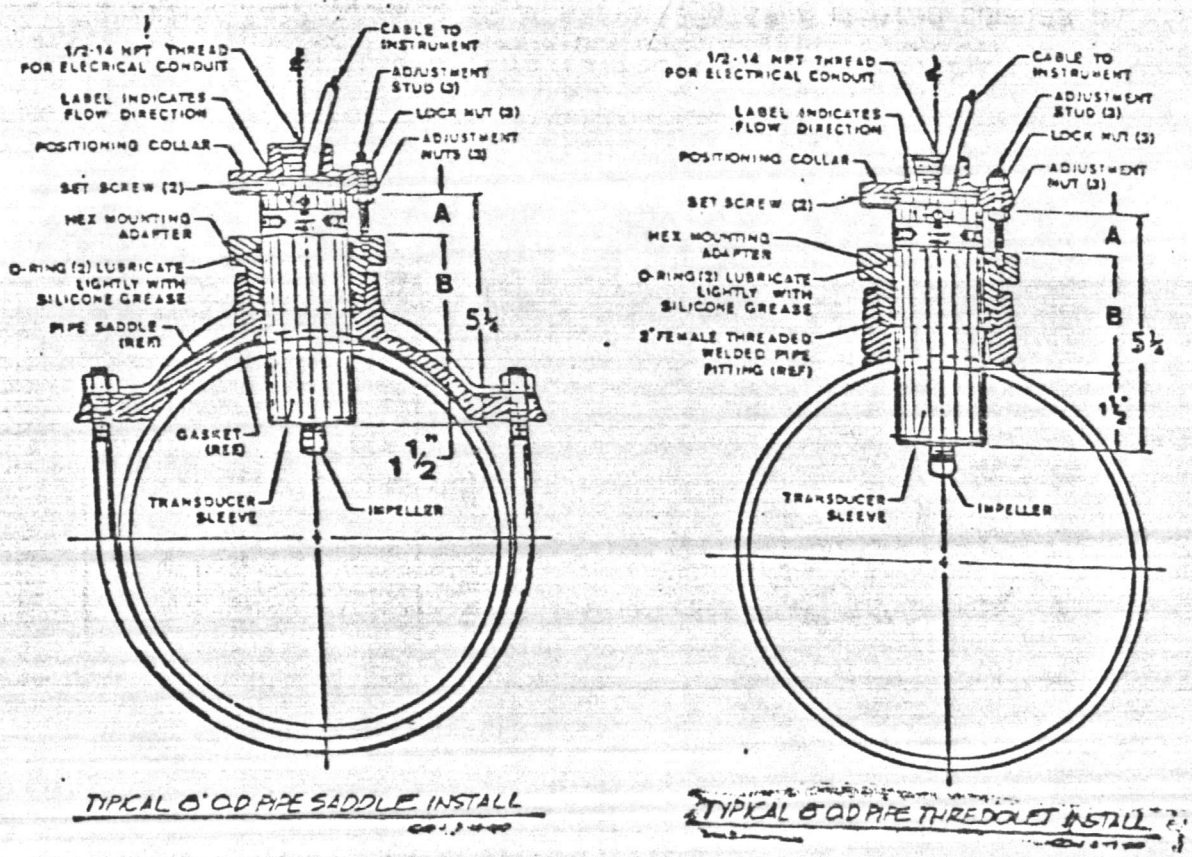

Figure 7 B

VALVES PNEUMATIC — 2-WAY & 3-WAY, BUTTERFLY

TO SELECT A VALVE BODY & PORT CODE

APPLICATION		Chilled or Hot Water, 30 psig Steam		Chilled or Hot Water	
FITTING		Flangeless Water — Flange (125/150 ASA)		Flangeless Water*	
			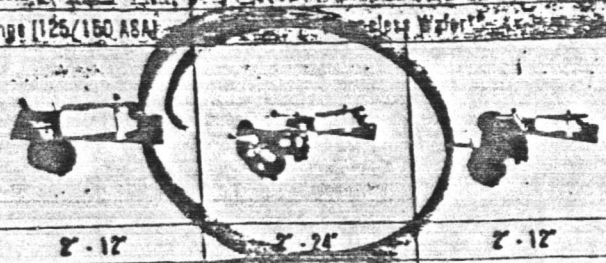		
Size		2" - 24"	2" - 12"	2" - 24"	2" - 12"
Part Number		VB-606-0-2-P	VB-616-0-2-P		VB-676-0-2-P
Flow Type		Equal %	Equal %	Mixing or Diverting	Mixing or Diverting
Material	Body	Iron	Iron	Iron	Iron
	Seat	2% Leakage	Replaceable EPT rubber liner	2% Leakage	Replaceable EPT rubber liner
	Stem	Stn Steel	Stn Steel	Stn Steel	Stn Steel
	Packing	Teflon Impregnated Asbestos	"O" Ring	Teflon Impregnated Asbestos	"O" Ring
	Disc	Iron	Nickel plated ductile iron	Iron	Nickel plated ductile iron
STEAM					
Pressure (psig)	Static	150	150	—	—
	Inlet	35	30	—	—
	Recommended Differential	See close-off pressure rating tables on following page			
Fluid Temperature °F (°C)	Maximum	281° (138°)	275° (135°)	—	—
WATER					
Pressure (psig)	Static	150	150	125	125
	Recommended Differential	See close-off pressure rating tables on following page			
Fluid Temperature °F (°C)	Minimum	40° (4°)	40° (4°)	40° (4°)	40° (4°)
	Maximum	350° (177°)	275° (135°)	350° (177°)	275° (135°)

P Code	Valve Size	C_V*			
-11	2"	75	45	75	45
-12	2-1/2"	115	70	115	70
-13	3"	170	100	170	100
-14	4"	275	200	275	200
-15	5"	440	425	440	425
-16	6"	640	680	640	680
-17	8"	1150	1125	1150	1125
-18	10"	1850	1750	1850	1750
-19	12"	2650	2600	2650	2600
-20	14"	3400		3400	
-21	16"	4500		4500	
-22	18"	5400		5400	
-23	20"	7000		7000	
-24	24"	10,000		10,000	

*Based on 60° opening for optimum control characteristics

**2 flangeless valves with 125 lb./150 lb. ASA flanges mounted on 125 lb. cast iron tee

See dimensional drawings

ORIFICE FLANGES

Orifice flanges 2" thru 24" [illegible] and 600 lb [illegible] and slip-on now manufactured by Aitken, Inc.

[illegible]

Complete inventory in carbon steel!

ALLOYS AVAILABLE UPON REQUEST.

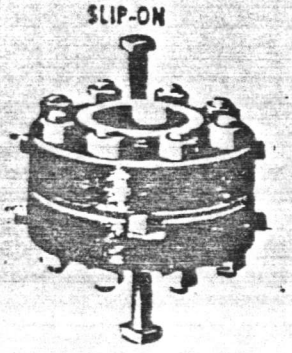

ORIFICE PLATES

Aitken Orifice Plates are made in [illegible] accordance with ISA standards using factory polished stainless steel stock. Aitken plates are carefully checked for thickness, flatness and concentricity of bore. After boring, the plate is hand finished by polishing. Each plate is individually inspected and packaged. Immediate delivery can be made using type 304 and 316 stainless steel [illegible] or 1/4" thick. Aitken Orifice Plates are available in both the series 500 and series 520 Paddle type. Line sizes offered are 1" thru 24".

CATALOG 500 Aitken Orifice Plates	[illegible] Type Orifice [illegible]			
	125 & 150 ANSI	250 & 300 ANSI	600 ANSI	900 ANSI
1.312	2"	2¼	2"	3¼
2.000	3"	3¼	3"	3½
2.437	4"	4¼	4"	5¼
3.437	5"	5¼	5"	6½
4.406	[illegible]	7¼	7"	8¼
6.437	9"	9¼	10"	11½
8.437	11	12¼	12"	14¼
10.687	13"	14¼	15"	17½
12.593	16"	16½	18	19½
13.750	17"	18¼	19"	20"
16.000	20"	21¼	22"	22½
17.9375	21"	23¾	24	25
20.000	23"	25½	26"	27½
24.250	28"	30½	31	32"

[illegible]

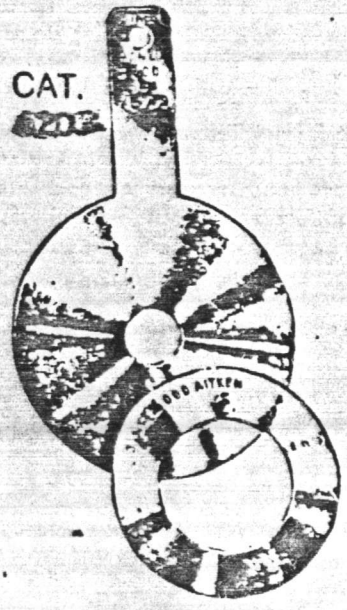

CAT. 500

AITKEN, INC.

3101 HOLMES ROAD • HOUSTON, TEXAS 77051

MAILING ADDRESS: P.O. BOX 14018 • HOUSTON, TEXAS 77021

TELEX 77-5509 • PHONE (713) [illegible] 431-1531

V-

(Replaced by VC, VP, VS-9273) VC-2124 VP-2124

Body Pattern: 1/2" to 1-1/2" Globe Screwed, 1" to 1-1/2" 300 lb. Globe Flanged
Flow Type: Equal Percentage
Body Material: Steel
Seat Material: Stainless Steel
Stem Material: Stainless Steel
Plug Material: Stainless Steel
Disc: None
Stem Packing: Teflon "V" Rings
Max. Operating Press.—Steam: 400 psig G.S., 300 psig G.F.
Max. Operating Press.—Water: 600 psig G.S., 300 psig G.F.
Recommended Diff. Press.—Steam: 100 psig
Recommended Diff. Press.—Water: 100 psig
Fluid Temps.—Steam: 446°F (230°C) G.S., 420°F (216°C) G.F.
Fluid Temps.—Water: 450°F (232°C) G.S. 400°F (204°C) G.F.
Cv Rating: .95, 1.8, 2.5, 4.0, 7.4, 9.0, 17.4, 33.4

VP-2224 Proportional, Spring Return or Non-Spring Return, 1/2" to 1-1/2" Valves VP-2224 ☐

Used for proportional control of high temperature water or high pressure steam.

(Replaced by VC-9253) VC-2604

(Replaced by VA-9313) VA-3142
(Replaced by VP-9313) VP-3142

Flow Type: Diverting
Body Material: Brass
Max. Operating Press.—Water: 200 psig
Maximum Closeoff: 10 psi
Fluid Temps: 200°F (93°C) Maximum
Cv Rating: 3.8

VA-3203 Two-Position, SAE Flared, 5/8" O.D. Diverting Valves VA-3203 ☐

Used for two-position diverting control of supply water for fan-coil units, convectors, and base board radiation. Manual opener.

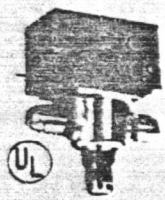

(Replaced by VS-9312) VP-3242

(Replaced by VS-9332) VP-3342

Flow Type: Diverting
Body Material: Brass
Max. Operating Press.—Water: 200 psig
Maximum Closeoff: 10 psi
Fluid Temps: 200°F (93°C) Maximum
Cv Rating: 3.8

VA-3403 Two-Position, Diverting, 5/8" or 7/8" O.D. Sweat Valves VA-3403 ☐

Used for two-position diverting control of supply water for fan-coil units, convectors and base board radiation. Manual opener.

(Replaced by VS-9312) VP-3542

Sizes: 2" to 24"
Body Pattern: Flangeless Wafer with 125 lb./150 lb. ASA Flange Rating
Flow Type: Equal Percentage
Body Material: Iron
Stem Material: Stainless Steel
Disc: Iron
Stem Packing: Teflon Impregnated Asbestos
Max. Operating Press.—Steam: 35 psig
Max. Operating Press.—Water: 150 psig
Fluid Temps.—Steam: 281°F (138°C) Maximum
Fluid Temps.—Water: 350°F (176°C) Maximum
Cv Rating: 75, 115, 170, 275, 440, 640, 1150, 1850, 2650, 3400, 4500, 5400, 7000, 10,000

VC-6064, VC-6065 Two-Position, Two-Way, Metal Seat, 2" to 24" Butterfly Valves VC-6064 ☐ VC-6065 ☐

VP-6064, VP-6065 Proportional, Two-Way, Metal Seat, 2" to 24" Butterfly Valves VP-6064 ☐ VP-6065 ☐

Used for control of steam or water where minor leakage is permissible.

VC,VP-6064

VC,VP-6065

VC-8044* C
VP-8044* C
VP-8045 C

Body Pattern: 125 lb Globe Flanged
Flow Type: Mixing
Body Material: Iron
Seat Material: Brass
Stem Material: Stainless Steel
Plug Material: Brass
Disc: None
Stem Packing: Graphite
Max. Operating Press.—Steam: No Rating
Max. Operating Press.—Water: 125 psig
Recommended Diff. Press.—Steam: No Rating
Recommended Diff. Press.—Water: 35 psig
Fluid Temps.—Steam: No Rating
Fluid Temps.—Water: +40°F (4°C) thru 300°F (149°C)
Cv Rating: 74, 101, 170, 290, 390

VC-8044 Two-Position, Non-Spring Return, 2-1/2" to 4" Mixing Valves

VP-8044 Proportional, Spring Return or Non-Spring Return, 2-1/2" to 6" Mixing Valves (Assembly for 5" and 6" Bodies not shown)

VP-8045 Proportional Non-Spring Return, 4" to 6" Mixing Valves

Used for control of liquids on mixing applications, air conditioning systems, and in hot water heating installations

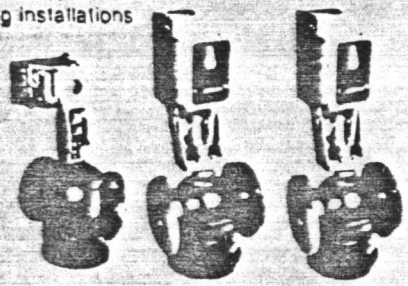

VP-8045 VP-8044 VC-8044

***VA-8041, VC and VP-8044 (1/2 thru 2") replaced by VA, VC, VP, VS-9313**

VP-8174* C

Body Pattern: 125 lb Globe Flanged
Flow Type: Diverting
Body Material: Iron
Seat Material: Brass
Stem Material: Stainless Steel
Piston Material: Brass
Piston Seal: Teflon Insert with Ethaylene Propylene "O" Ring
Disc: None
Stem Packing: Teflon Asbestos
Max. Operating Press.—Steam: No Rating
Max. Operating Press.—Water: 125 psig
Recommended Diff. Press.—Steam: No Rating
Recommended Diff. Press.—Water: 35 psig
Fluid Temps.—Steam: No Rating
Fluid Temps.—Water: 40°F (4°C) thru 300°F (149°C)
Cv Rating: 68, 85, 160, 195, 250

VP-8174 Proportional, Spring Return or Non-Spring Return, 2-1/2" to 8" Diverting Valves

Used for proportional control of liquids on diverting applications

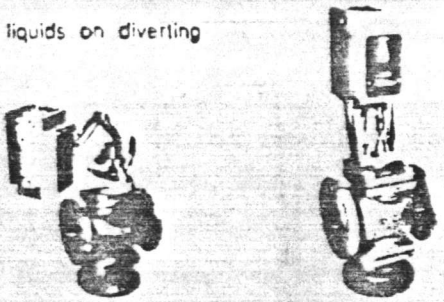

VP-8174 (4" thru 8" bodies) VP-8174 (2-1/2" thru 3" bodies)

***VP-8174 (1/2 thru 2") replaced by VP-9323 and VS-9323**

VA-9211-200 C
VS-9211-200 C

Flow Type: Equal Percentage
Body Material: Brass
Seat Material: Brass
Stem Material: Stainless Steel
Plug Material: Brass
Disc: Composition
Stem Packing: Teflon "V" Rings
Max. Operating Press.—Steam: 35 psig
Max. Operating Press.—Water: 250 psig
Recommended Diff. Press.—Steam: 20 psig
Recommended Diff. Press.—Water: 35 psig
Fluid Temps.—Steam: 281°F (138°C) Maximum
Fluid Temps.—Water: +40°F (4°C) thru 281°F (138°C)
Cv Rating: .4, 1.3, 2.2, 3.3, 5.0, 6.2, 8.2, 10.5, 12.0, 15.0

VA-9211-200 Two-Position, Normally Open, Union End, 1/2" to 1-1/4" Valves

VS-9211-200 Electronic, Proportional, Normally Open, Union End, 1/2" to 1-1/4" Valves

Used for control of hot and chilled water or low pressure steam. Used primarily on fan-coil units, radiators, and small unitary air conditioners.

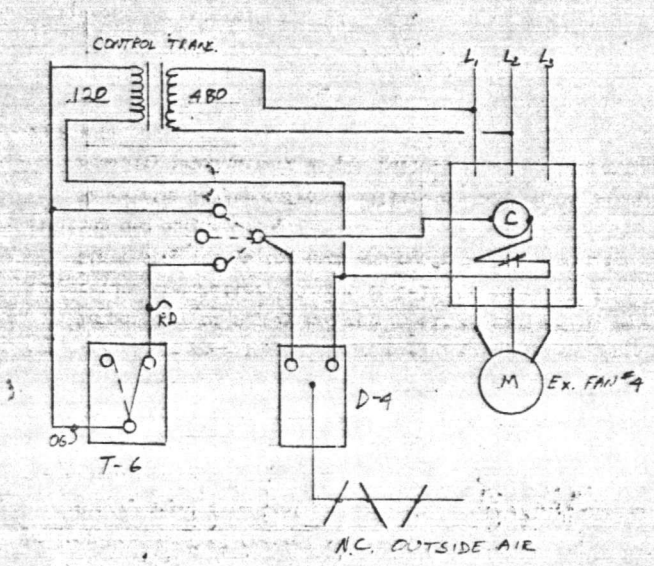

EX. FAN #4 CONTROL

ITEM 22

CONTROL SYSTEMS FOR BARRACKS

Designed & Installed by:

Jay Johnson Company
1612 Dixie Trail
Raleigh, N.C. 27607
PH: (919) 787-6581

Parts can be furnished by above supplier.

Mechanical Contractor:

Ramsey Air Conditioning, Inc.
P.O. Box 1333
Jacksonville, N.C. 28540
PH: (919) 455-0414

BARBER COLMAN COMPANY **SUBMITTAL** **Environmental Systems**

DATE February 6, 1986

PROJECT: N-62470-82-B-2244
NAVFAC SPEC# 05-82-2244
UEPH, Marine Corps Base
Camp Lejeune, NC

CONTRACTOR: Ramsey Heating & Air Conditioning
Jacksonville, NC

TC-4499/E-927

MAINTENANCE & OPERATING

INSTRUCTION INCLUDE

Equipment Schedule

General Instruction Sheets

Control Diagrams

PLEASE RETURN
SUBMITTAL TO JAY JOHNSON COMPANY, INC. 1612 Dixie Trail Raleigh, NC 27607
SUBMITTING OFFICE ADDRESS CITY

Barber-Colman Company
1300 Rock Street, Rockford, Illinois, U.S.A., 61101

LITHO IN U.S.A.

EQUIPMENT SCHEDULE

CUSTOMER: Ramsey Heating & Air Cond. Co.
Jacksonville, NC

JOB NAME: U.E.P.H.
Camp Lejeune, NC

DATE: February 6, 1986

REF.#TC-4499/E-927

MARK	QTY.	PART NUMBER	FEATURES	FUNCTION	LOCATION
		AIR COMPRESSOR - TYPICAL FOR EACH OF 5 FOR DUAL PRESSURE CONTROL AIR SOURCE			
CAC	1	K-212-7-00-4	1 HP, Duplex 208-60-3	Duplex Control Air Compressor w/80 Gallon Tank, 3.8 CFM@100 PSI	Mechanical Equipment Rm. Where Shown
		Including: Belt Guard, 3 PH, 20 Automatic Alternator, Tank Drain & Outlet Valve on ASME Tank.		Volt Motors, Magnetic Starters, Intake Filter, Pressure Switches, Intake Mufflers, Saftey Valve,	
AD	1	#8010 Hankison	1/6 HP, 115VAC	Refrigerated Air Dryer Package w/Oil Filter, By Pass Valve & Gauges	Near Compressor
V-2	1	VK-9313-202-4-4	½" OD, 3-way 5-10 PSI	3-Way Air Valve	
EP-3	1	AL-110	115 VAC	Index Pilot Valve	
PR-15	1	11-002-45	Norgren w/gauge	15 PSI RED Valve	
PR-22	1	11-002-45	Norgren w/gauge	22 PSI RED Valve	
AQ-2	1	TC-2974		Index Air Source For Summer/ Winter Operation	
	1	AL-412	30 PSI	Relief Valve	Near Compressor
	1	AL-327	0-100 PSIG	Air Gauges	Near Compressor
	1	AL-322	0-30 PSIG	Air Guages	Near Compressor

EQUIPMENT SCHEDULE

CUSTOMER: Ramsey Heating & Air Cond. Co.
Jacksonville, NC

JOB NAME: U.E.P.H. (N62470-82-B-2244)
Camp Lejeune, NC

DATE: February 6, 1986

REF.# TC-4499/E-927

MARK	QTY.	PART NUMBER	FEATURES	FUNCTION	LOCATION
		FOR EACH A.H.U. (TOTAL 30 AHU)			
TLL	1	TC-5141	38°F, 20' Cap.	Freezestat	Bulb In Mixed Air
	1	A10AG0AB	208V. 30 w/ HOA	AHU Starter	Near AHU
THL	1	TA-3433	135°F	Firestat	In Return Air
V-6	1	VK-9313-352-4-9	1¼", 3-Way	H/C Control Valves	At Coil
RC	1	RKS-3002	2 Input	Temperature Controller	In Panel
TTR	1	TKS-9014	0-100°	Return Temperature Transmitter	In Return Air
TTD	1	TKS-9017	50-150°	Supply Temperature Transmitter	In Supply Air
	1	QUO-110	10 Amp	Circuit Breaker	In Panel
TS-6	1	TK-2012	0-100°	Supply Thermostat	In Supply Air
G-1	3	AL-362	0-30 PSI	Pressure Gauge	At R.C. & V-6
CR-2	1	AK-50301		H/C Changeover Relay	In Panel
G-2	1	AKS-9044	0-100°	Temperature Transmitter Indication	On Panel Door
R-F	1	120 VAC DPDT	DPDT	O.A. Damper Relay	In Panel
SPC	1	PP-3013 w/Static Sensing Tips	Direct Acting	Differential Pressure Controller	Near A.H.U.
SD-1	1			Smoke Detector	In Return Air

EQUIPMENT SCHEDULE

CUSTOMER: Ramsey Heating & Air Cond. Co. JOB NAME: U.E.P.H. (N62470-82-B-2244)
Jacksonville, NC Camp Lejeune, NC

DATE: February 6, 1986

REF.# TC-4499/E-927

MARK	QTY.	PART NUMBER	FEATURES	FUNCTION	LOCATION
G-3	1	AKS-9047	50-150°	Temperature Transmitter Indication	On Panel Door
M-1	1	MK-4411 w/Linkage	Normally Closed	Bypass Damper Actuator	At Bypass Damper
M-2	1	M-836	24 VAC, N.C.	O.A. Damper Actuator	At O.A. Damper
D-1	1	16" x 16"	Opposed	Bypass Damper	At Bypass Location
D-2	1	14"w x 12"h	Opposed	O.A. Damper	In O.A. Intake Duct
	1	AT-532-222-1-01	.0075	Restrictor	Near AHU
		MISCELLANEOUS BARRACKS CONTROLS - TYPICAL PER BARRACK (5 BARRACKS)			
T-5	96	TK2-1735-404	15 PSI RA 22 PSI DA	Dual Pressure, Dual Temperature Thermostats	In Rooms For TAB Units
T-11	1	TA-3432	125°F	Firestat	Exhaust Fan EF-1
	1	SPST Switch		Fan EF-1 Disconnect	Near EF-1
	3	SPST Switch		H/C Thermostat For Fan Coil Units	In Spaces
RT-1	4	TC-1161-4/9		Indexing Thermostat	Bulb Strapped On Supply Pipe
TS-1	4	TC-4111	SPDT, 65°F		

EQUIPMENT SCHEDULE

CUSTOMER: Ramsey Heating & Air Cond. Co. JOB NAME: U.E.P.H. (N62470-82-B-2244)
Jacksonville, NC Camp Lejeune, NC

DATE: February 6, 1986

REF.# TC-4499/E-927

MARK	QTY.	PART NUMBER	FEATURES	FUNCTION	LOCATION
		MISCELLANEOUS BARRACKS CONTROLS - TYPICAL PER BARRACK (5 BARRACKS) CONTINUED			
V-4	1	VA-9211-211-4-7	1". 115 VAC, N.O.	Heating Index Valve	In Branch To Laundry Unit Heaters
T-2	1	TC-2974	80°	Index Thermostat	Bulb Strapped To Main
T-3	3	TA2-1101-404	65°F	Make On Drop	In Laundry Space
AQ-3	3	TC-2974	80°F	Make On Rise	On Supply Pipe
T-4	3	TC-1103	80°F	Exhaust Fan Control	In Laundry Space
		LIFT STATION CONTROLS			
T-9	1	TC-1104	40°F	Electric UH Control	In Space
	1	TC-4111	40°F	Electric UH Control	
S-5	1			Manual Fan Switch	For EF-7
AF-1	1			Air Flow Switch	For EF-8
A-1	1			Alarm	In Space
S-4	1			Manual Fan Switch	For EF-8
T-10	1	TC-4111	85°F	Space Thermostat	For EF-5
M-3	1	MA-418		Exhaust Fan Damper Actuator	For EF-5
R-1	1		DPST, 115	Control Relay	

EQUIPMENT SCHEDULE

CUSTOMER: Ramsey Heating & Air Cond. Co.
Jacksonville, NC

JOB NAME: U.E.P.H. (N62470-82-B-2244)
Camp Lejeune, NC

DATE: February 6, 1986

REF. #TC-4499/E-927

MARK	QTY.	PART NUMBER	FEATURES	FUNCTION	LOCATION
		LIFT STATION CONTROLS CONTINUED			
D-3	1	24"w x 42"h	Parallel	Blade Damper	In Outside Wall
		BARRACKS CONTROL & EMCS PANELS TYPICAL EACH BARRACK (5 TOTAL)			
		Control & EMCS Devices			
PL	6	AE-631	24"w x 32"h	For Control & EMCS Transmitters	Convenient To Each A.H.U.
DTC	1	AE-631	24"w x 32"h	For EMSC Signal Connections To Future Fid Panel	In First Floor Equipment Rm.
		EMCS FOR EACH LOCAL PANEL OF 5 BARRACKS - TYPICAL (30 Total)			
TT-2	2	TSP-7214	1-11 VDC	Supply & Return Temperature Transmitters	At Each A.H.U.
TR-2	1	AE-202	115/24VAC	Transformer	In Local Panel
R-6	1		SPST, 24 VAC	Fan Relay	In Local Panel
PS-1	1	PC-301		Differential Pressure Switch	At A.H.U. Filter
TT-12	2	TSP-7111	1-11 VDC	Space Temperature Transmitters	In Selected Space

EQUIPMENT SCHEDULE

CUSTOMER: Ramsey Heating & Air Cond. Co. JOB NAME: U.E.P.H. (N62470-82-B-2244) Camp Lejeune, NC

DATE: February 6, 1986

REF. #TC-4499/E-927

MARK	QTY.	PART NUMBER	FEATURES	FUNCTION	LOCATION
		EMCS FOR EACH LOCAL PANEL OF 5 BARRACKS - TYPICAL (30 TOTAL) CONTINUED			
HT-1	1	HS-8101		Humidity Tranmsitter	In Selected Space
HE-1	1	AH-102		Humidity Element	In Sensor
		BUILDING 441 - CONTROLS FOR SYSTEM			
	1	QUO-110		Circuit Breaker	In Local Panel
S-1	1	SPST		System On-Off	In Local Panel
S-2	1	SP3T		Cool-Auto-Heat	In Local Panel
T-1	1	TC-4111 w/ AT-211		Outdoor Index Thermostat Bulb Shield	Bulb In Outside Air On Outside Air Bulb
R-5	1		SPDT	Converter Control Relay	
AQ-1	1	TC-4111 w/AT-206		Limit Aquastat	In Return Water
V-3	2	VC-6664	3-way, 115VAC 6"	Changeover Valves	In Supply And Return Locations
I-1	4		115VAC	Indicating Lights Index & Operation	In Local Panel Door
CR-1	1		DPDT	Changeover Relay	In Panel
R-2	1		3PDT	Heating Operation Relay	In Panel

JF-4

EQUIPMENT SCHEDULE

CUSTOMER: Ramsey Heating & Air Cond. Co. JOB NAME: U.E.P.H. (N62470-82-B-2244) Camp Lejeune, NC

DATE: February 6, 1986

REF.# TC-4499/E-927

MARK	QTY.	PART NUMBER	FEATURES	FUNCTION	LOCATION
		BUILDING 441 - CONTROLS FOR SYSTEM CONTINUED			
R-3	1		DPDT	Cool Operation Relay	In Panel
V-7	1	VS-9213- -4-11	2", 115VAC, Spring Return	Converter Valve	At Converter
V-8	1	VS-9213- -4-11	2", 115VAC Spring Return	Converter Valve	At Converter
TC-1	1	CP-8102	2 Input	H.W. Reset Controller	In Local Panel
TS-2	1	TS-8201 w/AT-215	1K, 3/4"	H.W. Supply Sensor w/Bulb Well	Near H.W. Converter
TS-3	1	TS-8501	1K	Outdoor Sensor	In Outside Air
	1		DPDT	Shutdown Relay	In Panel
T-6	1	TC-1103	85°F	Exhaust Fan EF-4 Control	On Wall In Building 441
R-4	1		SPST, 115	Control Relay	
M-4	1	MA-418 w/Linkage		O.A. Intake Damper Actuator	
D-4	1		52"w x 64"h	O.A. Intake Damper	
C-1	2	CC-8111	115/20	Temperature Controllers ACC 1 & ACC 2	In Local Panel
TS-4	2	TS-8201	1K	Temperature Sensors	In C.W. Return From Each Chiller JF-4

EQUIPMENT SCHEDULE

CUSTOMER: Ramsey Heating & Air Cond. Co
Jacksonville, NC

JOB NAME: U.E.P.H. (N62470-82-B-2244)
Camp Lejeune, NC

DATE: February 6, 1986

REF.# TC-4499/E-927

MARK	QTY.	PART NUMBER	FEATURES	FUNCTION	LOCATION
		BUILDING 441 - CONTROLS FOR SYSTEM CONTINUED			
	2	AT-215	3/4"	Bulb Wells	In C.W. Return From Each Chiller
SQ-2	4	CC-8102	2 Stage	Cooling Sequencers	In Local Panel
S-6	1	DPST		ACC 1/ACC 2 Lead Chiller	
SQ-1	1	AD-8122	2 Output	Sequencer	In Local Panel
SA	1	AT-8522		Setpoint Adjuster	In Local Panel
S-7	1		DPDT	Local/EMCS Set Point Adjuster	In Local Panel
P-Y	1	AE-631	24"w x 32"h	EMCS Device Panel	In Building 441 Where Shown
	2	AT-215	3/4"	Bulb Wells	
TT-1	2	TSP-7214	05VDC	Temperature Transmitter	In Supply & Return Mains
	2	ASP-562	0-200°F	Indication Meter	On Panel P-Y
TG-1	4		SPST-24VDC	Start/Stop Relays For ACC 1, ACC 2, P 1 & P 2	In Panel P-Y
PC-1	1	PC-8403	1-11 VDC	Current Power Computer For ACC 1, ACC 2, P 1 & P 2	In Panel P-Y
FSN	1	Data Industrial #220B	2"	Water Flow Sensor	In 6" H/CW Main Loop As Shown

EQUIPMENT SCHEDULE

CUSTOMER: Ramsey Heating & Air Cond. Co.
Jacksonville, NC

JOB NAME: U.E.P.H. (N62470-82-B-2244)
Camp Lejeune, NC

DATE: February 6, 1986

REF.# TC-4499/E-927

MARK	QTY.	PART NUMBER	FEATURES	FUNCTION	LOCATION
		BUILDING 441 - CONTROLS FOR SYSTEM CONTINUED			
TR-1	1	Data Industrial #750		Analog Output Flow Transmitter	On Wall In Building 441
	1	Aitken Catalog #520	6 7/8" O.A., S.S.	Orifice Plate For Steam Flow Metering	Between Flanges
	1	Aitken	4"	Weld Neck Orifice Flanges	At Flow Sensing Location Point
	1	Robinson-Halpern 152 Series	0-1.5 PSI	Differential Pressure Transmitter	Convenient To Flow Orifice
T-8	1	TC-4111		Domestic H.W. Circulating Pump Temperature Control	In Domestic H.W. Return Line
P-X	2	AT-206 AE-631	24"w x 32"h	Control Panels	In Bldg. 441

General Instructions

TC-1101, TC-1102, TC-1103, TC-1104, TC-1105
Electric Room Thermostats
Two-Position

For low or line voltage on-off control of fan coils, fans, motor starters and contactors, two-position electric actuators.

Bimetal operated snap action SPDT switch. Color coded 6" (152 mm) leads. Differential 2°F (1°C). Units have beige plastic covers as standard. Mounts on flush or surface switch box or directly to wall (24 volt only).

Dimensions: 4-3/8" (111 mm) high × 2-7/8" (73 mm) wide × 1-5/8" (41 mm) deep.

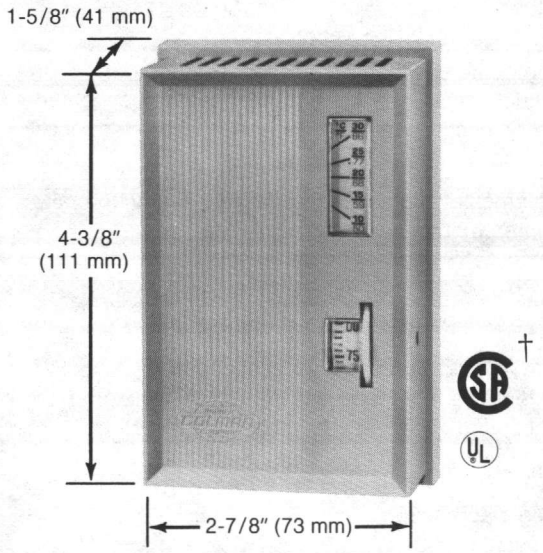

ACCESSORIES

AT-101	Lock cover kit
AT-104	Dial stop pins (pins included with each unit)
AT-136	Title plates (day, night, heat, cool)
AT-504	Plaster hole cover (small)
AT-505	Surface mounting base
AT-546	Auxiliary mounting plate
AT-602	Selector switch sub-base DP4T
AT-603	Selector switch sub-base one DP4T, one DPDT
AT-1103	Wire guard
AT-1104	Cast aluminum guard
AT-1105	Plastic guard
AT-1155	Plastic guard
AT-1165	Plastic guard
Tool-11	Calibration wrench
Tool-13	Contact burnishing tool

OPTIONS

Add "dash-number" (-XXX) suffix to base part number for desired option. For metal covers, specify TC2-110X-XXX. All configurations are UL listed. For models used in applications requiring series heat anticipators, contact factory.

† Only models with metal covers are CSA certified.

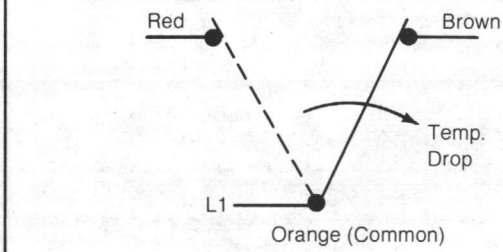

Brown makes on temp. drop

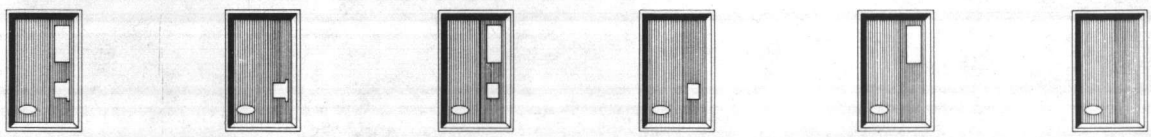

Standard -400 -401 -402 -403 -404

-500 parallel heat anticipation 24V Standard Cover
-501 parallel heat anticipation 120V Standard Cover
-502 parallel heat anticipation 240V Standard Cover
-601 10°F night depression 120V Standard Cover ††
-602 10°F night depression 24V Standard Cover ††
-603 10°F night depression 240V Standard Cover ††

†† Normally, night depression is controlled by a centrally located time clock such as AE-174 or AE-178, or by selector switch sub-bases (AT-602 or AT-603).

Part Number	Control Dial Range*	Full Load Amps		Locked Rotor Amps		Pilot Duty (VA)
		24/120 Vac	240 Vac	24/120 Vac	240 Vac	
TC-1101	55 to 85°F (13 to 29 °C)	4.4 Orange to Brown Lead	2.2 Orange to Brown Leads	26.4 Orange to Brown Lead	13.2 Orange to Brown Leads	40 @ 24 Vac
TC-1102	45 to 75°F (7 to 23°C)					
TC-1103	75 to 105°F (24 to 40°C)	3.0 Orange to Red Lead	1.5 Orange to Red Leads	18 Orange to Red Lead	9 Orange to Red Leads	210 @ 120/240 Vac
TC-1104	35 to 65°F (2 to 18°C)					
TC-1105	90 to 120°F (32 to 49°C)					

*Units marked in both °F and °C; dial stop pins included to limit dial range.

LITHO IN U.S.A. 7-84

INSTALLATION

Requirements

Thermostats require upright mounting on a properly flat vertical surface. Locate the thermostat where it will be exposed to unrestricted circulation of air which represents the average temperature of the controlled space.

CAUTION

Do not locate the thermostat near sources of heat or cold, such as lamps, motors, sunlight or concealed ducts or pipes, or where there is a danger of electrocution (ie., shower rooms).

The thermostat is designed for service in any normally encountered human environment.

Procedure

1. Pull all wires. (Use copper wire only.)
2. Make electrical connections to thermostat. Make all connections in accordance with the job wiring diagram and in compliance with national and local electrical codes. Class I wiring is required unless all circuits to contacts are powered from a Class II source. (See Page 3 for additional wiring diagrams.)
3. Remove thermostat cover and fasten thermostat to box or wall.
4. Attach thermostat cover.

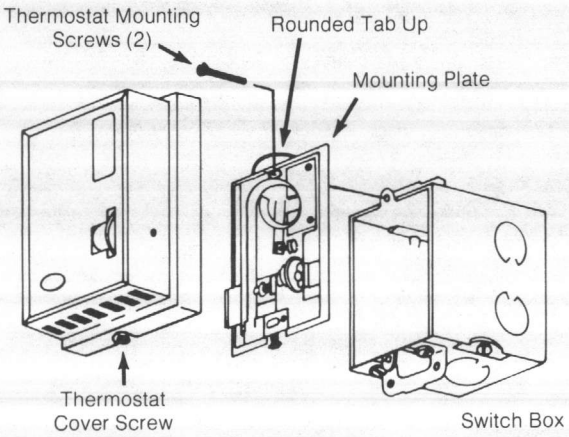

CHECKOUT

After installing a thermostat, make an initial check of the switching action. Verify the switch action by listening to and watching the switch contacts or by using a voltmeter between the proper sides of the switch.

1. Run the setpoint dial to a temperature above ambient. This should cause the thermostat to make a circuit between orange and brown leads.
2. Turn the setpoint dial setting down below ambient. This should cause the thermostat to make a circuit between orange and red leads.

CALIBRATION

All thermostats are precision calibrated at the factory and normally will not require any further attention. However, if recalibration is necessary, proceed as follows:

1. Turn off control power and power to night depression circuit, where applicable.
2. Set setpoint dial to correspond to actual stable room temperature, as read from an accurate thermometer.
3. Remove thermostat cover. Do not breathe on the thermostat or handle excessively as this will affect the accuracy of the final calibration.
4. If contact blade is made to the left (red) contact, with a small screwdriver, turn calibration screw counterclockwise (looking at head of screw) until blade makes to right (brown) contact.

Note

Each complete turn of screw changes calibration approximately 15°F (8°C).

Now turn screw very slowly clockwise until blade just makes the left (red) contact. Thermostat is now properly calibrated.

If contact blade is originally made to the right (brown) contact, turn calibration screw slowly clockwise until element just makes the left (red) contact. Thermostat is now properly calibrated.

5. Replace thermostat cover.
6. Turn on control power.
7. Recheck calibration about 30 minutes later to be sure heat from handling of or breathing on bimetal element did not result in an erroneous setting.

MAINTENANCE

This is a quality product. Regular maintenance of the total system is recommended to assure sustained optimum performance.

Open areas at bottom and around base of thermostat should be kept clean and free from obstructions to allow proper flow of air. If switch contacts need cleaning, this may be done with Tool #13 (burnishing tool).

NOTE

Thermostat may require calibration after cleaning contacts.

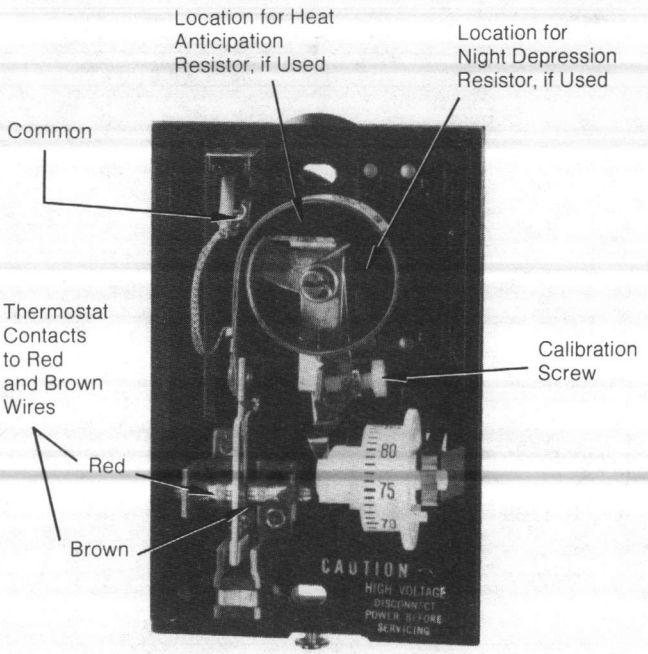

REPAIR

Field repair of the thermostat is not recommended. The thermostat should be replaced, if the system is not operating correctly and the reason is traced to the thermostat.

Typical of Parallel Heat Anticipation (heater size determined by voltage) with or without Night Depression

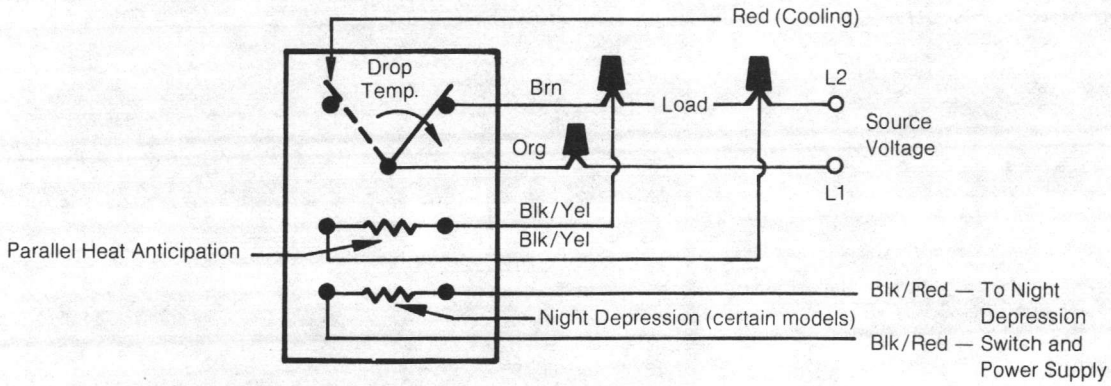

Typical of Series Heat Anticipation (heater size determined by ampere rating of load) with or without Night Depression

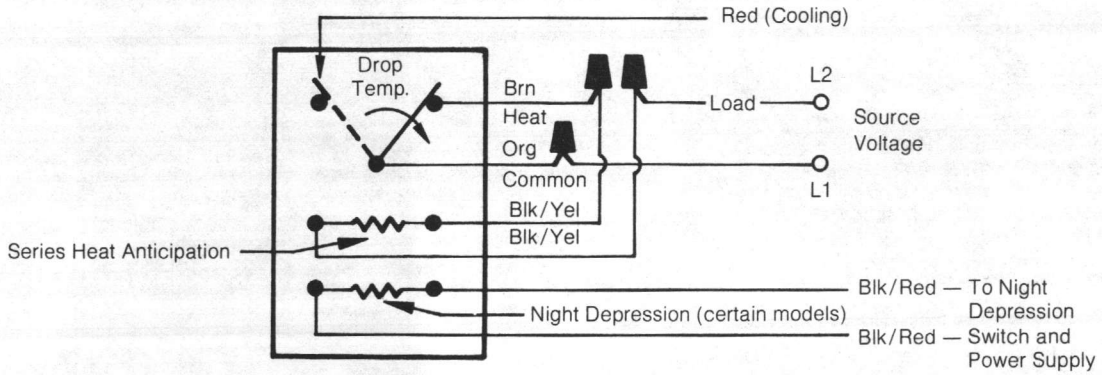

Typical Night Depression

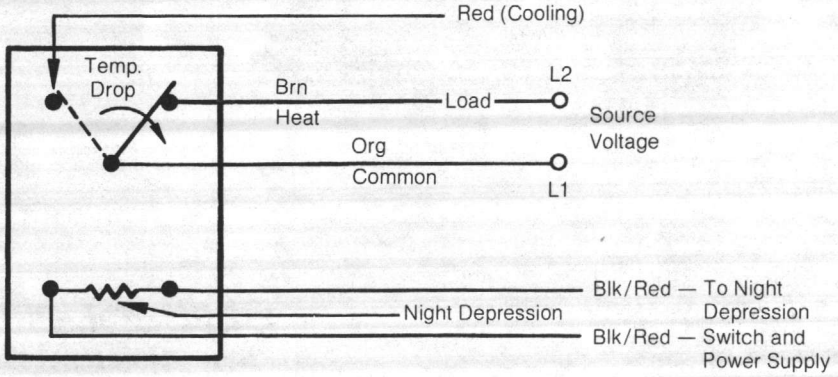

Barber-Colman Company
ENVIRONMENTAL CONTROLS DIVISION

1354 Clifford Avenue
P.O. Box 2940
Loves Park, IL U.S.A. 61132-2940

F-18785-2 BK

LITHO IN U.S.A.

General Instructions

MA-305
MA-318
MA-405 THRU MA-419
Oil Submerged Actuators

For two-position operation of dampers, valves and other equipment which requires the return to normal position upon power interruption.

SPECIFICATIONS

Two-wire circuit. Actuator shaft rotates cw 180° when power is applied. Spring returns actuator shaft ccw to original position when actuator is de-energized. Optional SPDT auxiliary end switch makes (or breaks) circuit at powered end of stroke. Ambient temperature limitations -40 to 136°F (-40 to 58°C). 16 lb-in. (1.8 N-m) actuators mounted in any position; 60 lb-in. (6.8 N-m) must be mounted with output shaft horizontal. Allow 6"(152 mm) clearance above the actuator wiring compartment.

ACCESSORIES

Damper linkage accessories:

AM-111	Crank arm for 5/16" diameter damper shaft.
AM-112	Crank arm for 3/8" diameter damper shaft.
AM-113	Crank arm for actuator or 1/2" diameter damper shaft.
AM-115	Crank arm for 7/16" diameter damper shaft.
AM-116	Splined crank arm for actuator.
AM-122	Linkage connector straight type.
AM-123	Damper clip.
AM-125	5/16" diameter × 20" damper rod.
AM-125-048	5/16" diameter × 48" damper rod.
AM-132	Ball joint connector.
AM-301	90° mounting bracket.
AM-401	Explosion proof housing for damper or valve.

Valve linkage accessories for 60 lb-in. units only. Use on VB-9213, VB-9253, VB-9273, VB-9313 and VB-9323 valve bodies 1/2" to 2".

*AV-390	Common parts linkage kit.
*AV-91	Cam and plunger kit for 1/2" to 1-1/4" valves.
*AV-92	Cam and plunger kit for 1-1/2" to 2" valves.

*Order AV-390 plus appropriate AV-91 or AV-92 for complete linkage.

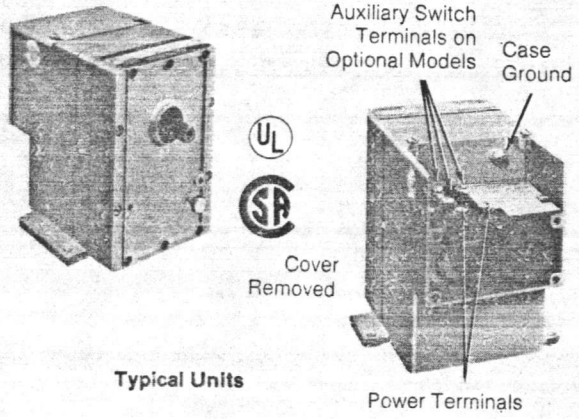

Typical Units

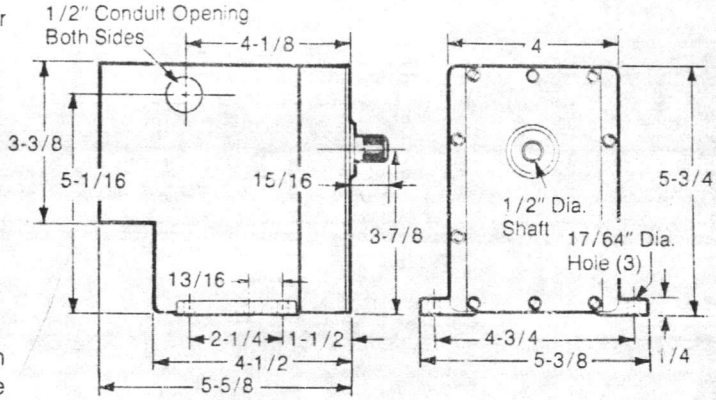

All Dimensions in inches
1" = 25.4 mm

OPTIONS

Available 120, 208, 240 Vac; 50 or 60 Hz.

Actuator Part Number	Power Supply (Vac) 60 Hz	Aux.* Switch	Input (Watts)	VA		Rated Torque Lb-In. (N-m)	No Load Timing† at 75°F (24°C) Secs/180°	Nominal** Damper Area Sq. Ft. (m^2)		Applications
				Running	Holding			Parallel	Opposed	
MA-305	24	No	25	56	56	16 (1.8)	20	9 (.8)	11 (1)	Damper
MA-305-500	24	Yes								
MA-405	120	No		48	48					
MA-405-500	120	Yes								
MA-406	208	No		63	63					
MA-406-500	208	Yes								
MA-407	240	No		48	48					
MA-407-500	240	Yes								
MA-318	24	No	70 Running 25 Holding	92	32	60 (6.8)	20	33 (3.1)	43 (4)	Valve or Damper
MA-318-500	24	Yes								
MA-418	120	No		108	42					
MA-418-500	120	Yes								
MA-416	208	No		104	38					
MA-416-500	208	Yes								
MA-419	240	No		120	39					
MA-419-500	240	Yes								

*2 FLA, 12 LRA @ 24/120 VAC; 1 FLA, 6 LRA @ 240 VAC.
**Damper Ratings are Nominal and based on Standard (Not Low Leakage) Dampers at 1" W.C. Pressure and 2000 FPM Velocity.
†Spring Return Timing with Full Load Opposing Spring approximately 60 Sec.

LITHO IN U.S.A. 10-84

THEORY OF OPERATION

Run/Adjust

MA-305, 405, 406 and 407 units rotate 180° clockwise when energized and spring return counterclockwise to 0° when de-energized. The motor is assembled to a gear train and stalls at the end of the power stroke.

MA-318, 416, 418 and 419 have an end of travel switch which reduces the running input from 70 watts to 25 watts at the end of the clockwise rotation. Actuator must be linked to the load (i.e. damper), to allow the actuator on power stroke, full end of travel movement.

INSTALLATION

Procedure

Wiring Make all electrical connections in accordance with the job wiring diagram and in compliance with national and local electrical codes. Two 1/2-inch conduit knockouts are provided on actuator case.

Power Wire Selection Table

Actuator	Wire Size (AWG)	Maximum Run (Ft.) (1 run has 2 wires)
MA-305	14	122
	12	191
	10	305
MA-405	14	2800
MA-406	14	2800
MA-407	14	2800
MA-318	14	44
	12	68
	10	110
MA-416 MA-418 MA-419	14	950
	12	1580

Opposite each model number and wire size is the maximum 2 wire run in feet for one actuator. To determine the maximum run when multiple actuators are used, divide the number of actuators into the corresponding maximum run.

Typical wiring for MA-305, 405, 406 and 407:

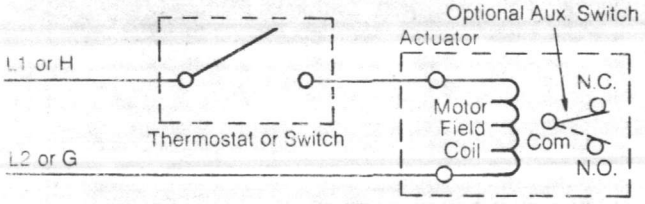

Actuator rotates 180° cw when controller contacts are closed. Actuator spring returns when controller contacts are open.

Typical wiring for MA-318, 416, 418 and 419:

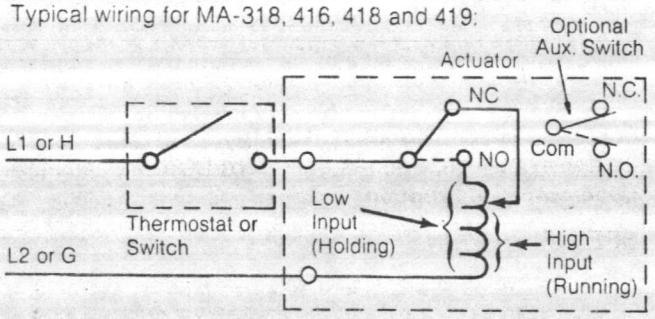

Damper Installation Figure above illustrates linkage for a 180° actuator operating an arm through a 90° arc. To fasten linkage proceed as follows:

1. Fasten linkage connector at end of driven crank shaft arm.
2. Fasten linkage connector at punch mark on actuator crank arm (about .707 of the radius).
3. Move damper to normal position and clamp connecting link to connectors.
4. Check adjustment for proper operation by running actuator and driven shaft between limits of travel.

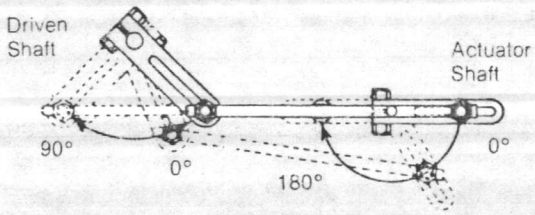

CAUTION

If crank arm does not provide proper travel, reset connecting link in linkage connector. NEVER ATTEMPT TO TURN THE ACTUATOR SHAFT WITH A WRENCH OR A CRANK. This may damage actuator gears.

Valve Installation The valve must be installed with the valve stem upright. Install all single-seat valves (unless directional arrow indicates otherwise) with pressure under the seat.

See AV-300 General Instruction sheet F-19068 for detailed instructions when used as valve actuator.

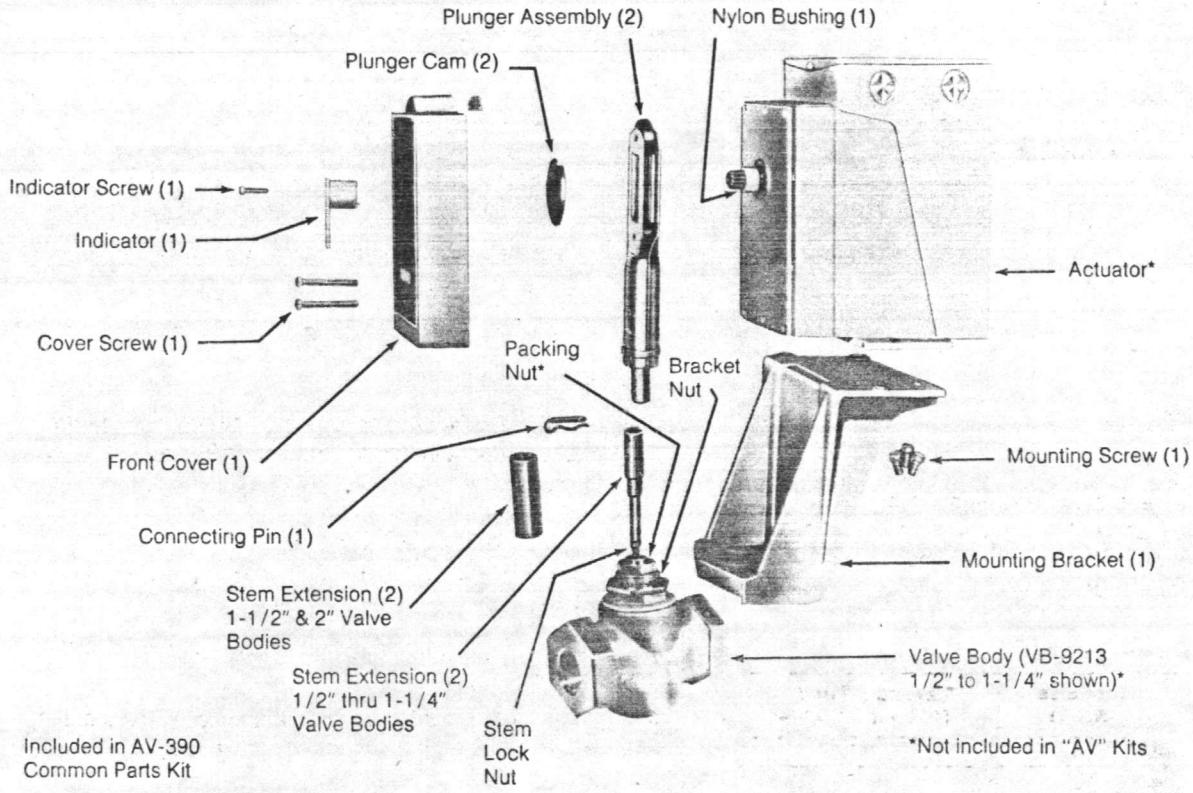

(1) Included in AV-390 Common Parts Kit

(2) Included in AV-91, AV-92, AV-93 or AV-94 Plunger and Cam Kit

*Not included in "AV" Kits

Figure 5

TYPICAL COMPONENTS FOR VALVE INSTALLATION

CHECKOUT

After the entire system has been installed, the following checks for proper operation can be made.

1. Be sure that the system power is connected and on.
2. Be sure controller (manual or automatic) is operating properly per system requirements.
3. When the controller (manual or automatic) energizes the actuator it will run to the end of the stroke (180° clockwise).
4. When the controller (manual or automatic) de-energizes the actuator, the spring will return the actuator shaft to its original position.
5. Action of auxiliary switch:
   - C made to N.C. when actuator is de-energized.
   - C made to N.O. when actuator is energized and reaches the end of stroke.

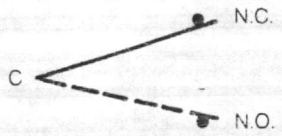

Auxiliary Switch

MAINTENANCE

A minimum of maintenance is required since the motor and gear train are submerged in oil for continuous lubrication and cooling and sealed in a die cast case. If necessary to refill the actuator with oil, always use Barber-Colman immersion oil, which is available in quart or one gallon cans (refill capacity — approximately 3/4 of a quart).

Normally, actuators are returned to the factory for reconditioning if the need arises. However, some field repairs can be performed. Replacement of gear train parts or return springs should not be attempted in the field. Refer to the repair parts list for parts and kits available.

Barber-Colman Company
ENVIRONMENTAL CONTROLS DIVISION

1354 Clifford Avenue
P.O. Box 2940
Loves Park, IL U.S.A. 61132-2940

F-6491-16 BK

LITHO IN U.S.A.

General Instructions

CC-8111 SERIES
Electronic Controller
Proportional & Single Stage Relay

DEVICE INFORMATION

The CC-8111 Controller is a proportional controller which directly accepts either a 1000 Ohm sensor input(s), a 1 to 15 Vdc control signal, or a 135 Ohm slidewire input and produces a proportional voltage output signal which operates a relay giving two position output control. This device consists of two temperature bridges, a solid state control amplifier, a comparator amplifier and a relay output stage. The CC-8111 is used in systems where solid state temperature sensing is desired to control electrically actuated devices.

CC-8111

		Adjustable Functions				Pin Selectable Functions		
Part Number	**Power Req. (50/60 Hz)**	**Setpoint "A"**	**Setpoint "B"**	**Diff. Range**	**Relay Dropout**	**Throttling Range**	**Authority Ratio**	**Relay Diff.**
CC-8111-024	24	41 to 95°F 5 to 35°C	41 to 95°F 5 to 35°C	1 to 54°F Std. By Added Res. 1-400°F	2 to 12 Vdc (IV1 to Com)	3,6 or 9°F 1.6, 3.4 or 5°C	.5 .75 1.0 15.0 Aux.	.5 1.0 2.0 4.0 Vdc (IV1 to Com)
CC-8111-120	120							
CC-8111-240	240							

Units dual marked in °C and °F.

Figure 1. Part Number Selection and Function Chart

SPECIFICATIONS

1. **Controlling inputs** — Designated as input "A" and input "B".
   - A. Temperature — One or two 1000 Ohm resistance type temperature sensors (TS-8000 Series).
   - B. Slidewire transducer — 135 Ohms. Requires two resistors and connects to input "A" only. See input wiring diagrams No. 5 for further details.
   - C. Voltage signal — 1 to 15 Vdc. Requires removal of jumper between OP1 and IV1 terminals. Signal connected between IV1 (+) and COM (−) terminals.
2. **Outputs**
   - A. Relay SPDT with adjustable dropout and selectable differential of 0.5, 1, 2 and 4 volts.

Contact Rating	24 Vac	120 Vac	240 Vac
Amps (continuous)	1	1	.5
Amps (inrush)	10	10	5
Pilot duty sealed (VA)	25	125	125
Pilot duty inrush (VA)	250	1250	1250

Figure 2.

   - B. Voltage signal 2 to 15V with a 10 ma. capacity. Output terminals OP1 (+) to COM (−).
   - C. +20 −1.5, +1 Vdc with 35 ma. capacity. Supply can be used for powering other System 8000 controllers or adaptors.
   - D. +6.2 ±.5 Vdc with 4 ma. capacity. Supply can be used for powering System 8000 remote setpoint adjusters (AT-8100 Series) and auxiliary bridges (CN-8101, TS-8601).
3. **Supply inputs.** Requires 24, 120 or 240 Vac 50/60 Hertz depending on models selected, 4 V.A.
4. **External Screw Terminal Nomenclature**

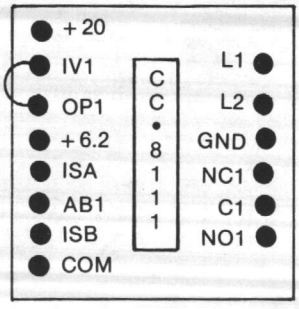

NOTE
ON CC-8111-024, L1 & L2 ARE NOT PRESENT. TERMINALS ARE MARKED 24 Vac.

Figure 3.

L1
L2 — Supply voltage 50/60 Hz.
GND — Chassis ground
NC1 — Normally closed relay contact
C1 — Relay common
NO1 — Normally open relay contact
+20 — +20 Vdc power supply
IV1 — 1 to 15 Vdc input (+)
OP1 — 2 to 15 Vdc output (+)
+6.2 — +6.2 Vdc power supply
ISA — Input "A"
AB1 — Input, auxiliary bridges or setpoints
ISB — Input "B"
COM — System common (−)

5. Dimensions

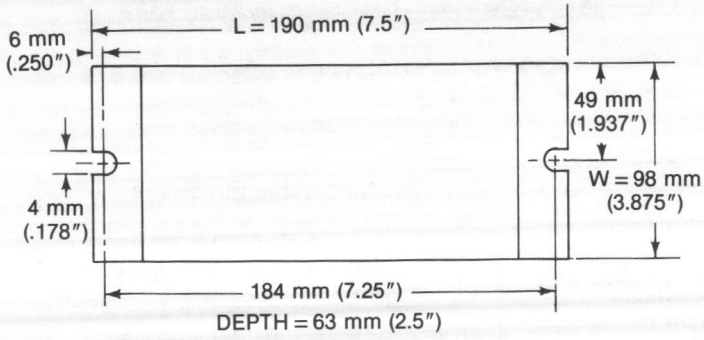

Figure 4

DEFINITIONS

1. **Mode of operation** — Either direct acting or reverse acting.
   A. Direct acting (D.A.) means that an increase in temperature at the sensor(s) causes the CC-8111 voltage output (OP1) to increase.
   B. Reverse acting (R.A.) means that an increase in temperature at the sensor(s) causes the CC-8111 voltage output (OP1) to decrease.
2. **Reset control action** — The direction of reset determines whether input "A" setpoint is reset upward or downward on a temperature decrease at input "B".
   A. Direct reset: A temperature decrease on input B resets input A setpoint downward.
   B. Reverse reset: A temperature decrease on input B resets input A setpoint upward.

ADJUSTMENTS & JUMPERS

See Figures 5 and 6.

INSTALLATION

1. Mounting

The CC-8111 can be mounted in any position on any surface free from severe vibration or shock. Avoid locations where excessive moisture or corrosive fumes are present. The unit is provided with a 7-1/2 inch piece of 3-7/8 inch wide mounting track. Mounting hardware required (not provided) is two #8 screws. Ambient Limits: 40 to 140°F.

2. Wiring Procedure

A. Codes: Make all electrical connections in accordance with job wiring diagrams and in compliance with national and local electric codes.

B. Sensors: For sensor wiring, use No. 18 gauge twisted pair cable (6 turns per foot or equivalent) up to 200 feet. On runs over 200 feet, recalibrate the system or use larger diameter wire.

CAUTION

Shielded cable (Belden No. 8422 or equivalent) must be used when it is necessary to install the sensor leads in the same conduit with power wiring, or when it is known that high RFI/EMI generating devices are near. Ground the shield at the controller only on the COM (−) terminal.

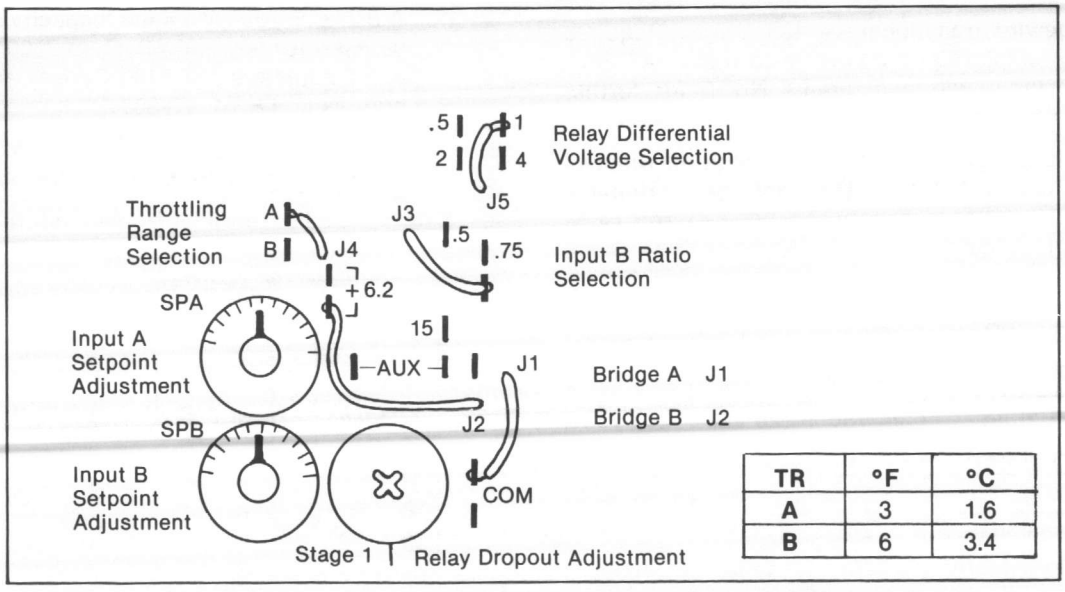

TR	°F	°C
A	3	1.6
B	6	3.4

Figure 5. Location Chart

Control / Sensor	Jumper	Range / Output Function	Jumper or Terminal Connection	Factory Set	Definition/Function	
Sensor A or Sensor B	—	Direct Acting	ISA / ISB to 6.2	—	Changes Res. when temp. changes	Balco Res. Pos. Temp. Coeff.
		Reverse Acting	ISA / ISB to COM			
Bridge A	J1	Direct Acting	COM	COM	Resistance voltage divider	Provides a voltage output relationship to sensor resistance
		Reverse Acting	6.2			
Bridge B	J2	Direct Acting	COM	6.2		
		Reverse Acting	6.2			
Setpoint A/B (SPA) (SPB)	—	5-35°C 41-95°F	—	70°F CAL	Input A/B temperature adjustment	Sensor A/B temp. at which OP1 to COM is 7.5 ±.5 Vdc
Ratio Authority (ISB only)	J3	.5 to 1	.5	1:1	Amount of temp. change of the B bridge required to reset the A bridge 1°F.	—
		.75 to 1	.75			
		1 to 1	1			
		15 to 1	15			
		Fig. 10	Aux.			
Throttling Range (T.R.)	J4	3°F (1.6°C)	A	A	Sets amplifier volts per deg. change at ISA input	Degrees temp. change at ISA input to produce a 3 Vdc change OP1 to COM
		6°F (3.4°C)	B			
		9°F (5°C)	A with AB shorted			
Relay Differential	J5	.5 Volt	.5	1	Volts change between pullin and dropout	—
		1 Volt	1			
		2 Volts	2			
		4 Volts	4			
Relay Dropout	—	2 to 12 Vdc	—	6V	Voltage where the relay drops out	C1 makes to NC1

Figure 6. Controller Setup and Definition Chart

OPERATION (Ref. FIG.7)

The CC-8111 Controller consists of two temperature sensing bridges with setpoint, one proportional voltage control amplifier, one voltage comparator amplifier with relay output and two power supplies.

Input A and B sensors — Each requires a 1000 Ohm, at 21°C (70°F), resistance type (Balco wire) temperature sensor. The sensor increases in resistance with an increase in temperature (3.96 Ohms/°C or 2.2 Ohms/°F). These changes are detected by input A and input B bridges.

Input A and B bridges — Each bridge input accepts the sensor resistance signal. The bridge converts the resistance signal change into a dc millivolt signal change. The output from input A bridge is fed to the proportional control voltage amplifier. The output from input B bridge is fed to the ratio selection network. Each bridge can be connected for either direct or reverse acting bridge output. This is accomplished on input A bridge by connecting J1 jumper (red/blue) to the pin marked COM for direct acting or to the pin marked +6.2 for reverse acting. Input B bridge jumper J2 (white/blue) is connected to the pin marked COM for direct acting or the pin marked +6.2 for reverse acting. Input A and B bridges each have temperature setpoint adjustments.

Ratio selection network — Ratio selection networks allow selection of the desired input B bridge gain in order to accomplish resetting type control systems. The output of the ratio selection networks is fed to the proportional voltage control amplifier.

Proportional voltage control amplifier — The control amplifier sums and amplifies the millivolts output signals from input A and B bridges. The control amplifier output is a proportional 2 to 15 Vdc signal which is fed to the voltage comparator amplifier. The amplifier uses overall negative feedback as a means of gain adjustment. The gain adjustment becomes the throttling range adjustment of the CC-8111.

Comparator amplifier — This comparator receives the variable voltage from the control amplifier and compares it to the relay drop out and differential voltage settings. As these points are exceeded, the comparator changes state to operate the relay for two position output control action.

CALIBRATION

The CC-8111 Controller normally requires no field calibration. The unit is factory calibrated for 7.5 ± .5 Vdc output between OP1 and COM, when input A and B sensors are at 21°C (70°F) temperature (1000 Ohms resist-

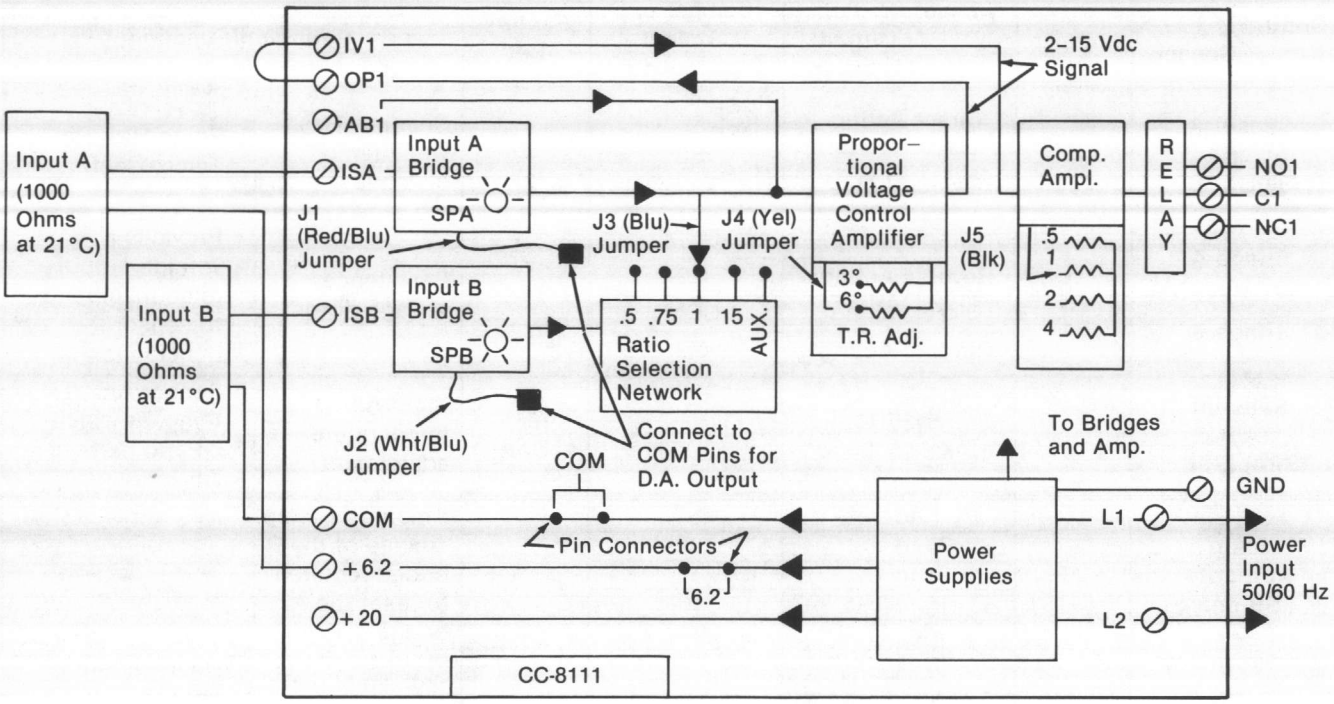

Figure 7. Controller and System Block Diagram

ance) and their respective setpoints set for 21°C (70°F). The relay dropout voltage is factory set for 6.0 Vdc with a 1 volt differential selected. A throttling range of 3°F and a ratio of 1:1 have been selected. The input bridges are connected for (A) direct and (B) reverse acting outputs. If field calibration becomes necessary or a calibration check is desired, proceed as follows:

CAUTION

Line voltage is present on terminals L_1 and L_2.

1. Disconnect sensor to input A terminals. Replace input A sensor with a 1000 Ohm ±.1% resistor (SYZE-12987 test kit). Input A sensor will be connected to the CC-8111 as follows:
   A. Between ISA and +6.2 terminals for direct acting controller output.
   B. Between ISA and COM terminals for reverse acting controller output.
2. Disconnect sensor to input B terminals. Replace input B sensor with a 1000 Ohm ±.1% resistor (SYZE-12987 test kit). Input B sensor will be connected to the CC-8111 as follows:
   A. Between ISB and +6.2 terminals for direct acting controller output.
   B. Between ISB and COM terminals for reverse acting controller output.
3. Remove cover from CC-8111. Disconnect and tape the J3 jumper (blue) on the CC-8111.
4. Disconnect all input leads for the AB1 terminal on the CC-8111.
5. Connect a 20,000 Ohm per volt VOM between OP1 (+) and COM (−) terminals. Use a 15 to 20 Vdc scale range.
6. Rotate setpoint A (SPA) to the black dot by 68°F. The VOM should read 7.5 ±.5 Vdc. If not, rotate the SPA shaft until 7.5 ±.5 Vdc reading is obtained. Hold the shaft of the SPA firmly and then rotate the pointer in a CCW direction until the pointer is on the black dot by 68°F on the dial scale.
7. Connect the J3 jumper (blue) to the 1:1 ratio pin.
8. Repeat Step 6 above but now use setpoint B (SPB) adjustment.
9. Change SPA until VOM reads 6.0 ±.3 Vdc. The relay should have dropped out. If not, rotate stage 1 pot until relay dropout occurs.
10. The CC-8111 is now calibrated.
11. Replace all sensors and the cover to the CC-8111 and remove the meter.

CHECKOUT

1. Check nameplate for correct supply voltage and measure with a VOM between L_1 and L_2 terminals on the controller. If the supply voltage is not present, check the power source for problems.
2. Check the 20 (−1.5, +1) Vdc supply by measuring with a VOM between the +20 (+) and COM (−) terminals. If the 20 Vdc is not present or is out of tolerance, then:
   A. Check to see if the 20 Vdc supply is overloaded (35 ma. or greater).
   B. External device shorting the 20 Vdc supply.
   C. If neither A nor B above, consider the controller as defective and replace.

3. Check the +6.2 ± .5 Vdc supply by measuring with a VOM between the +6.2 (+) and COM (−) terminals. If the +6.2 Vdc is not present or is out of tolerance, then:
   A. Check to see if the 6.2 Vdc supply is overloaded (7 ma. or greater).
   B. External devices shorting the 6.2 Vdc supply.
   C. If neither A nor B above, consider the controller as defective and replace.
4. To check output operation, proceed as follows:

   For input A: Pull jumper J3 and tape.
   A. If the CC-8111 has been connected for direct acting output operation, short the +6.2 and ISA terminals together. The voltage as measured with a VOM between OP1 (+) and COM (−) terminals should be 2.5 Vdc or less.
   B. If the CC-8111 has been connected for reverse acting output operation, short the ISA and COM terminals together. The voltage as measured with a VOM between OP1 (+) and COM (−) terminals should be 15 Vdc or greater.
   C. Disconnect short across ISA and +6.2 or COM.

   For input B: Pull jumper J1 and tape. Remove sensor A.
   A. Repeat A, B and C above, except substitute ISB in the place of ISA.
5. Reconnect jumpers and sensors and the system is ready for operation.

APPLICATIONS

The units are shipped with input (A) direct and (B) reverse acting connections, throttling range (TR) at 3°F, ratio 1:1 and relay differential set to 1 volt. Other bridge connections will require recalibration.

Single Input

The controller may be used for a single input on either input A or B. The bridge action, sensor connections and internal connections are shown below.

Input	Bridge and Input Action	Internal Connections	Sensor Connection
A	Direct Acting	J1 to COM, J2 disconnect and tape	ISA and +6.2
	Reverse Acting	J1 to +6.2, J2 disconnect and tape	ISA and COM
B	Direct Acting	J1 disconnect and tape, J2 to COM, J3 on 1:1 ratio pin	ISB and +6.2
	Reverse Acting	J1 disconnect and tape, J2 to +6.2, J3 on 1:1 ratio pin	ISB and COM

Figure 8.

Dual Input

The controller can be used as a control with reset action by using both A and B inputs. Determine the mode of operation of input A control, select the ratio of authority of input B and determine the reset control action. Set up the controller per the chart below.

Input A Action	Sensor A Between	J1 to Pin	Reset Action of Input B	J2 to Pin	Sensor B Between
Direct Acting	+6.2 and ISA	COM	Direct Reset	+6.2	ISB-COM
			Reverse Reset	COM	ISB-+6.2
Reverse Acting	ISA and COM	+6.2	Direct Reset	COM	ISB-+6.2
			Reverse Reset	+6.2	ISB-COM

Figure 9.

On dual input applications, J3 is connected to desired ratio pin. For additional ratios, connect jumper J3 to "AUX" pin and add additional resistors as shown below (See Figure 5 for location of pins and jumpers):

Ratio	Aux. Resistor Value (Connect between Aux. Pins)
2.5:1	29.4K, ±1%, metal film
5:1	57.6K, ±1%, metal film
10:1	115K, ±1%, metal film
20:1	221K, ±1%, metal film

Figure 10.

Differential Inputs

The controller can be used to respond to the difference between inputs A and B. Use sensor on ISA in the higher temperature media. Set differential to be maintained on SPA and SPB using SPA minus SPB as the selected differential number. Set ratio to 1:1.

Input	Sensor Connects	Jumper Connection	Relay Energizes
A	ISA-6.2	J1 to COM	Inc. Temp. A
B	ISB-COM	J2 to 6.2	Dec. Temp. B

Figure 11.

The CC-8111 differential range can be extended by setting SPA to the black dot by 68°F and placing the resistor selected from the table below between 6.2 and AB1 terminals. This will fix SPA to the indicated degrees in the table. The differential will be this fixed value minus the setting of SPB.

Setpoint A Degrees F	Resistor ±5% 1/4 Watt
150	130K
200	82K
250	56K
300	43K
350	36K
400	30K
450	27K

Typical Control System Wiring

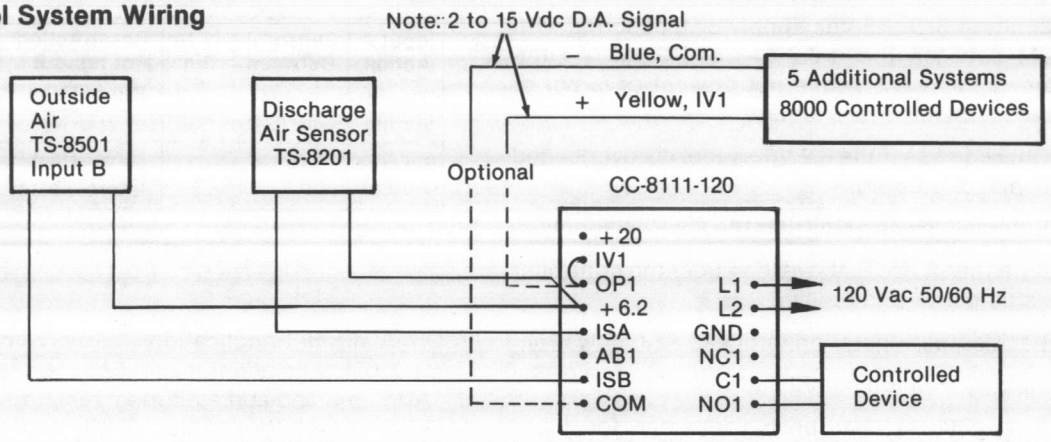

Figure 12. Discharge Temperature Control with Outdoor Air Reset

NOTE

Connect J2 jumper to COM and refer to dual input setup procedure.

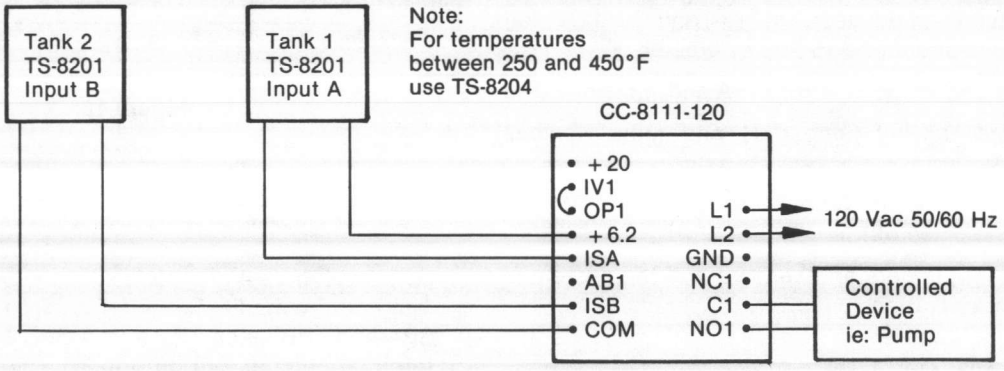

Figure 13. Tank Differential Temperature Control

INPUT WIRING DIAGRAMS

1. Temperature Sensor(s) Input (Standard).

Direct acting = DA, Reverse acting = RA.

Room Sensor With Setpoint

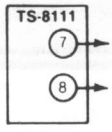

	Input A (J1)		Input B (J2)	
Terminal	DA	RA	DA	RA
7	6.2	COM	6.2	COM
8	ISA	ISA	ISB	ISB
Setpoint A adjusted for 21°C or 70°F			Setpoint B adjusted for 21°C or 70°F	

Sensors Without Setpoint

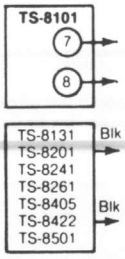

	Input A (J1)		Input B (J2)	
Terminal	DA	RA	DA	RA
7	6.2	COM	6.2	COM
Blk				
8	ISA	ISA	ISB	ISB
Blk				

2. Remote Setpoints.

Used with direct acting or reverse acting sensor inputs.

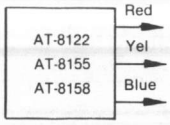

	Input A		Input B	
Wire	DA	RA	DA	RA
Red	6.2	COM	6.2	COM
Yel	AB1	AB1	AB1	AB1
Blue	COM	6.2	COM	6.2

NOTE

Adjust SPA and SPB adjustments in CC-8111 for 21°C or 70°F. Ratio select set for 1:1.

3. Night depression and/or morning warm-up.

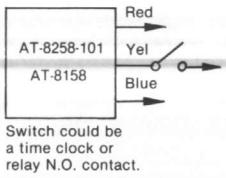

Wire	Direct Acting	Reverse Acting
Red	6.2	COM
Yel	AB1	AB1
Blue	COM	6.2

4. Temperature indication and control.

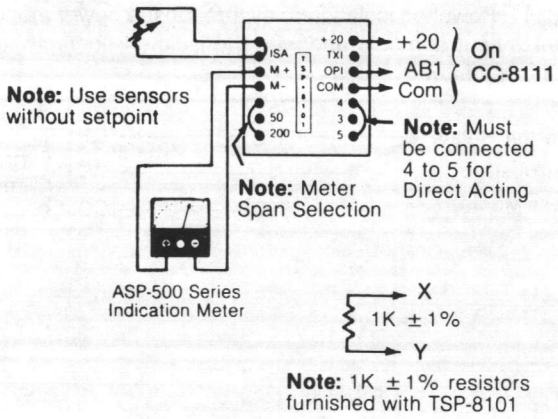

Input A			Input B	
Wire	**DA**	**RA**	**DA**	**RA**
X	6.2	ISA	6.2	ISB
Y	ISA	COM	ISB	COM
	J1 to COM	J1 to 6.2	J2 to COM	J2 to 6.2

NOTE

For temperature indication and control on input B, OP1 of the TSP is connected by a resistor, selected from the table below, to AB1 of the CC-8111. Connect CC-8111 jumper J3 as shown in the table for the ratio selected.

Table

Ratio	R Value	Jumper J3 Connects To
1:1	None	1:1 ratio pin.
5:1	45.3K, ±1%, M/F	Aux. ratio pin. 57.6K, ±1% between aux. pins.
10:1	102K, ±1%, M/F	Aux. ratio pin. 115K, ±1% between aux. pins.
15:1	158K, ±1%, M/F	15:1 ratio pin.
20:1	215K, ±1%, M/F	Aux. ratio pin. 221K, ±1% between aux. pins.

5. 135 Ohm slidewire—Input A only.

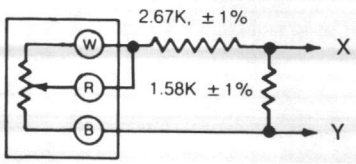

Input A		
Wire	**DA**	**RA**
X	6.2	COM
Y	ISA	ISA

NOTE

Adjust SPA in CC-8111 for 21°C (70°F). Disconnect J3 jumper and tape end. Do not use TR greater than 3°F on CC-8111.

6. Solar compensation using TS-8531 sensor and CN-8101 auxiliary bridge.

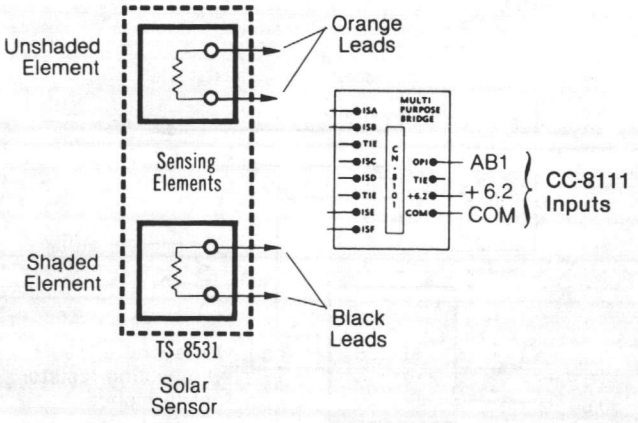

TS-8531 Sensor Leads	Direct Acting	Reverse Acting
Orange	ISA	ISE
Orange	ISB	ISF
Black	ISE	ISA
Black	ISF	ISB

NOTE

No calibration of CN-8101 required.

CN-8101 Ratio Setting	Degrees Reset (No Sun to Full Sun)
.5:1	70°F
1:1	35
5:1	7
10:1	3.5
20:1	1.75

CC-8111 Input A Action	Solar Compensation Connected for:	Reset Action Increased Sun Load Resets Setpoint A:
Direct Acting	Direct Acting	Down
	Reverse Acting	Up
Reverse Acting	Direct Acting	Up
	Reverse Acting	Down

7. AD-8501 Automatic Reset Adaptor.

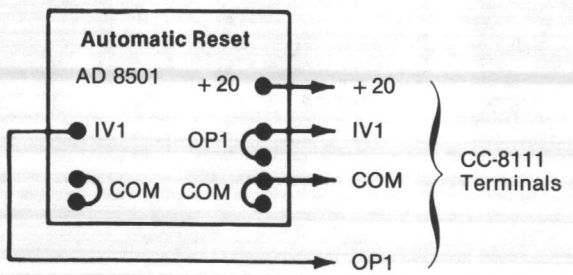

NOTE

1. Remove jumper between OP1 and IV1 on CC-8111.
2. Can be used with either D.A. or R.A.

8. Humidity control only—reverse acting CC-8111 output only.

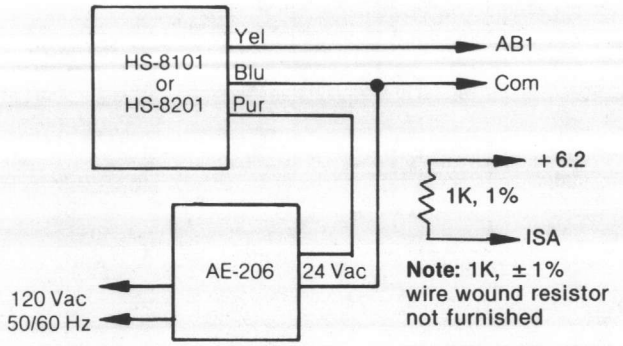

NOTE

1. SPA adjustment becomes system calibration adjustment only.
2. Disconnect J2 jumper (wht/blu) and tape end.

9. Humidity indication and control—reverse acting CC-8111 output only.

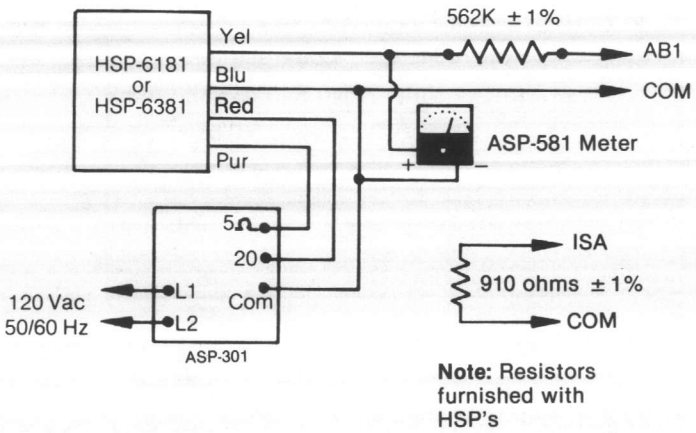

NOTE

1. J1 jumper (red/blu) must be connected to pin marked +6.2.
2. Disconnect J2 jumper (wht/blu) and tape end.
3. SPA adjustment can be used for setting humidity control point.

10. Power Monitor Control Override.

NOTE

Remove jumper between OP1 and IV1 terminals of CC-8111. Power an isolation relay through the power monitor output contacts and wire the isolated contacts as shown below.

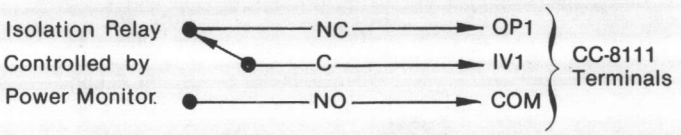

Barber-Colman Company
ENVIRONMENTAL CONTROLS DIVISION

1354 Clifford Avenue
P.O. Box 2940
Loves Park, IL U.S.A. 61132-2940

General Instructions

Solid State Sensing
Temperature and Humidity
Series TS-8000 and HS-8000

Temperature Sensing

GENERAL INFORMATION

Sensing is accomplished by the use of a temperature sensitive Balco resistance wire packaged in the form of room, duct, averaging and outdoor type configurations. The design of the entire system is around a 1000 Ω sensing element at 70°F.

WIRING

Make all electrical connections to the element in accordance with the installation and wiring diagram for the job. Comply with national and local electrical codes. Do not use the element box as a junction box for other control circuits. It is generally advisable to use flexible conduit for connecting box to rigid conduit. Restrict element leads to shortest length practical. Barber-Colman twisted cable or factory approved cable should be used.

Room — TS-8100 Series

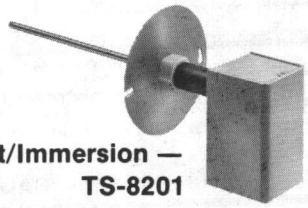

Duct/Immersion — TS-8201

Outdoor — TS-8501

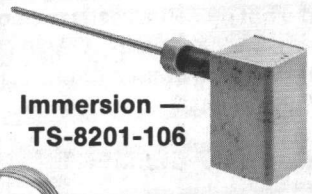

Immersion — TS-8201-106

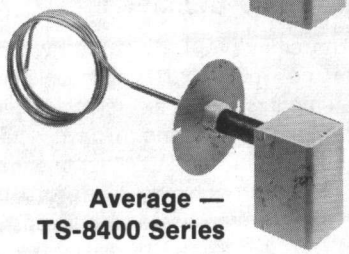

Average — TS-8400 Series

Part No.	Use	Location	Mounting	Terminal Code Wiring
TS-8101	Room Sensor w/o Setpoint	Wall	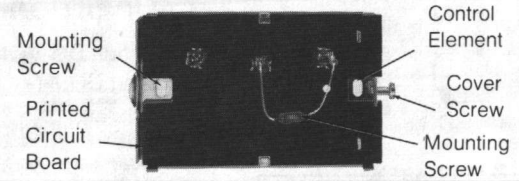	⑦ } Output ⑧ } Terminals
TS-8111	Room Sensor w/Setpoint	Wall		
TS-8201	Duct Immersion 7″ Immersion Length	Duct or Well AT-215 3/4″ NPT	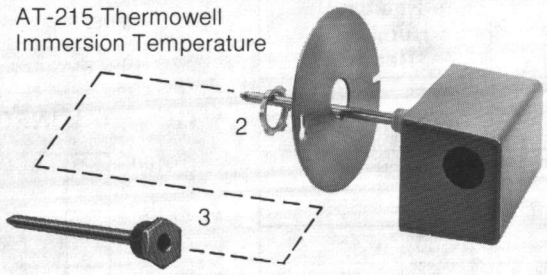	Pigtails: Black } (C) Controlling Black } Black } (L)* Controlling Black } *Found only on the TS-8331
TS-8201 -106	Immersion 4″ Insertion Length	Well AT-225 1/2″ NPT		
TS-8331	Lagged Sensor	Duct		
TS-8405	5′ Average	Duct		
TS-8422	22′ Average	Duct	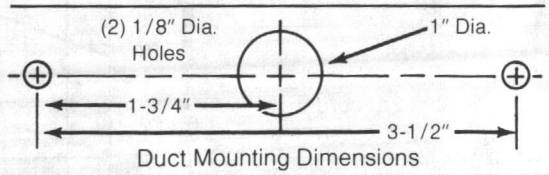 Duct Mounting Dimensions	
TS-8241	Diffuser	Ceiling	Mount on Face of Ceiling Diffuser. See Instructions for B-C Models PB, PS or SFS, SFB. Pg. 2	Pigtails: Black Black
TS-8261	Light Fixture	Light Fixture	Mount in Return Grill of Light Fixture	Pigtails: Black Black
TS-8501	Outdoor Air	Outside of Building	Use Conduit Connectors	Pigtails: Black } Controlling Black }
TS-8531	Solar	Outside of Building		Orange } Element Orange } (Solar)
TS-8533	Econostat	Outside of Building		Red } Heater Red } (Econostat)

Solid State Humidity Sensing

Sensing is accomplished by the use of a nonorganic resistance type material which will be housed either in a room or duct type mounting base. Selection of the proper AH-100 series element will provide the capability of control over a 15% range. Elements are available through the span of 5% to 95% R.H.

The average resistance of each element at midrange is approximately 22,000 ohms; except the violet element, which is 50,000 ohms. A resistor of appropriate value may be substituted in the bridge circuit to verify the element resistance.

CAUTION

Do not measure resistance of element with an ohmmeter, as DC voltage across the element will cause polarization and a new element will be required. Basic element is not repairable. Order a replacement from the factory or local branch office.

CARE OF ELEMENT

The elements are wrapped with a moisture pervious cellophane, which actually is an air filter. On installations using duct elements, where air velocities are reasonably high **do not remove cellophane.** Always install element with wrapping so that perforations in cellophane are on downstream side of air currents. Punch more holes (only in downstream side of cellophane) to increase element sensitivity.

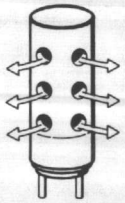

TABLE 1.

Part Number	Sensing Element Color	Relative Humidity Range
AH-100	Violet	85% to 95%
AH-101	Blue	70% to 85%
AH-102	Green	50% to 70%
AH-103	Yellow	40% to 55%
AH-104	Orange	30% to 45%
AH-105	Brown	10% to 30%

WIRING

Make all electrical connections to the device in accordance with the installation wiring diagram for the job. Comply with national and local electrical codes. Restrict element leads to shortest length practical, using three conductor twisted cable, 18 gauge minimum.

CAUTION

Power wiring must never be installed in the same conduit.

LOCATION

Locate the sensing element where it will be exposed to unrestricted natural air circulation and to the average conditions of the controlled space. Do not locate it near extreme sources of heat, cold, or moisture.

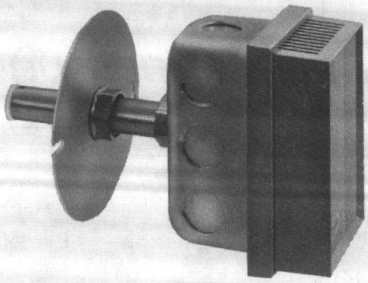

Duct — HS-8200 Series

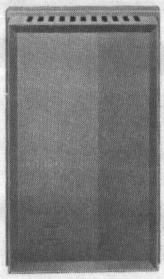

Room — HS-8100 Series

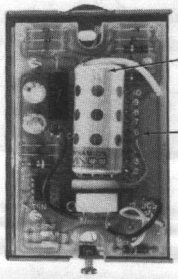

CALIBRATION

1. Place DC-VOM on output of CP-8102 controller, OP1 (+) and COM (-).
2. Read humidity at the sensor.
3. Place jumper on proper pin, per chart below.
4. Adjust the controller (CAL A) to 7.5 Vdc output.
5. Refer to CP-8102 literature if further details are required.

GENERAL INFORMATION

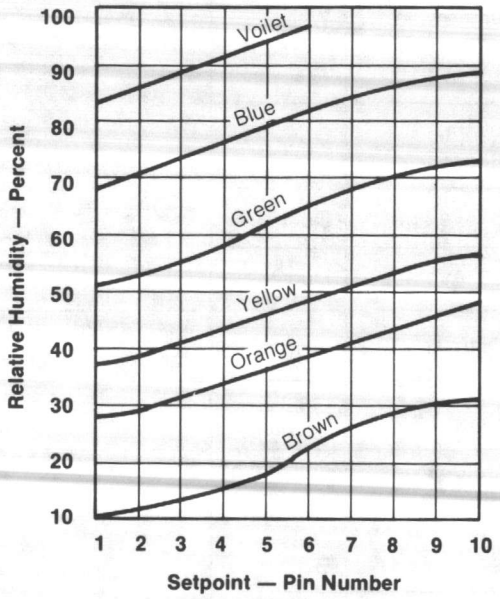

MOUNTING OF DIFFUSER SENSOR TS-8241

Sensor should be mounted to the face of the ceiling diffuser so that it projects downward into the room. See Figure 1. If the diffuser has an adjustable pattern, the discharge air direction must be adjusted to a horizontal pattern. This will insure a representative sample of room air over the element (Figure 2). The transmitter will not perform satisfactorily if the discharge is adjusted to a vertical pattern.

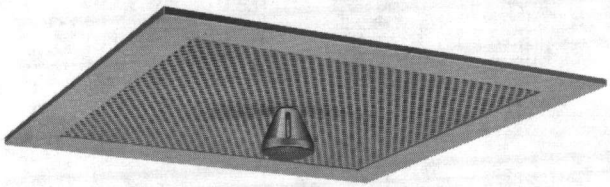

Figure 1.
Sensor Mounted in Perforated Face Ceiling Diffuser Model PB or PS

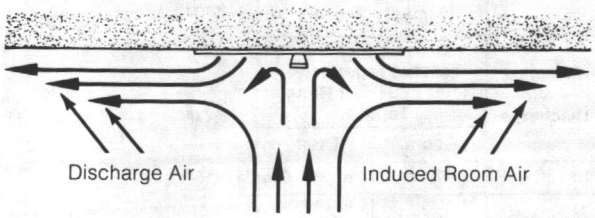

Figure 2.
Room Air Induced over Sensor by Discharged Air

A 7/16-inch hole is required in the diffuser face for mounting.

The SFS and SFB louver faced diffusers are available in nine air patterns, both in the square and rectangular design. For proper installation, use Table 2 which shows sensor location and the mounting figure referred to in the installation procedure. APNS-107 must be ordered separately.

SENSOR MOUNTING PROCEDURE ON SFS AND SFB USING APNS-107 KIT

1. Drill a 5/16" hole for sensor leads.
   a. Fig. 3. Locate hole center on an angled surface about 5/16" from an edge of the 1/2" square so as to avoid drill contact with the welded center plate mounting brackets.
   b. Fig. 4. Locate the hole center on one louver about 5/16" from junction of two center back to back louvers.
   c. Fig. 5. Locate hole center on an end louver about 1/2" from the junction of the louver and the mounting flange.
2. Bring field leads through the 5/16" hole. If required, remove the louver assembly from the mounting flange.
3. Center the APNS-107 bracket over the 5/16" hole (use as a template) and drill 1/8" holes for the mounting screws.
   a. Fig. 3. Drill two holes near edges of square center plate.
   b. Fig. 4. Drill two holes, one each on bottom edge of back to back louvers.
   c. Fig. 5. Drill one hole on end louver.
4. Assemble the sensor to APNS-107 bracket as shown in Figs. 3, 4, and 5.

   Fig. 5. Cut off one side of APNS-107 as shown.
5. Make field connections to sensor leads and push leads up through the 5/16" hole.

   Wrap friction or electrical tape around the leads and fill the 5/16" hole, preventing direct primary air passage over the sensor.
6. Attach APNS-107 as shown in Figs. 3, 4, and 5 using #6 screws.

   Fig. 5. Cover the crack between the end louver and mounting flange at least 12" on each side of the sensor. A 24" length of 3/4" tape stuck to mounting flange can be used.
7. The sensor installation is complete.

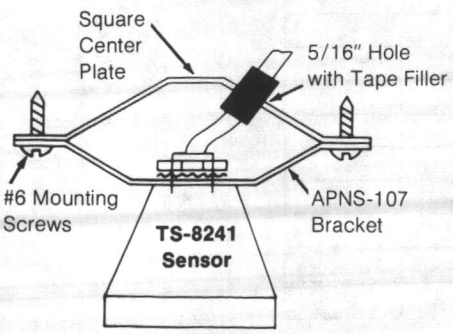

Figure 3

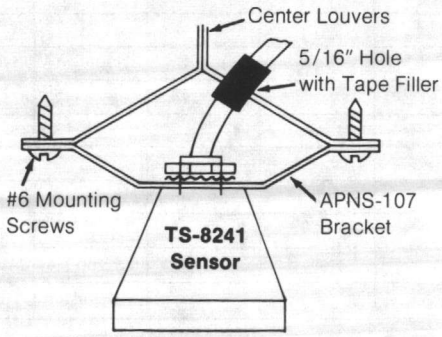

Figure 4

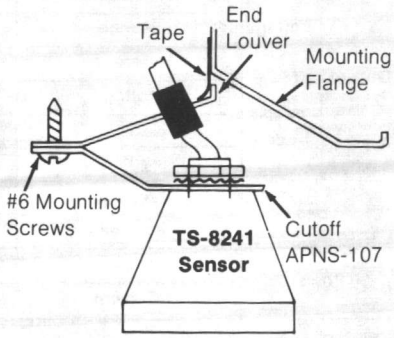

Figure 5

TABLE 2. SENSOR LOCATION AND FIGURE SHOWING MOUNTING DETAILS

Air Pattern	SENSOR LOCATION			
	Center of Diffuser	Center of Side with No Air Throw	Corner Opposite Air Throw	End Opposite Air Throw
	Sq. Rect.	Sq. Rect.	Sq. Rect.	Sq. Rect.
0	Fig. 3 Fig. 4			
2		Fig. 4		
3	Fig. 4			
4				
5				
6			Fig. 3 Fig. 5	
7				
8				Fig. 5
9				

TS-8241 must not be located nearer than 18" from a wall or corner of a room when used on air patterns 2, 6, 7, 8, or 9. This allows space for induced air to pass over TS-8241.

AIR PATTERNS (As Viewed from Diffuser Face)

Number is air pattern designation when ordering.

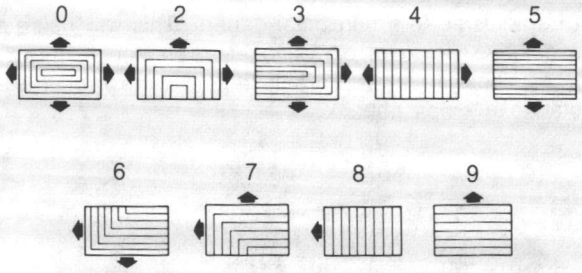

Specifications			Temperature Sensors				Humidity Sensors	
			Room Light Fixture Diffuser*	Duct/ Immersion	Averaging	Selective Ratio Discharge	Sensors must be ordered separately. Refer to Sensor Range Table 1.	
							Room	Duct
Package		Size**	4⅜×2¾×1⅝	4¾×3½×9⅛	4¾ × 3½ × †	4¾×3½×9⅛	4⅜×2¾×1⅝	4⅜×3½×9⅛
		Mounting	Wall	Duct/ Immersion	Duct	Duct	Wall	Duct
		Mounting Position	Vertical	Vertical	Vertical	Vertical	Vertical	Vertical
		Connection	Terminals	Pigtails	Pigtails	Terminals	Pigtails	Pigtails
		Ambient Temp. Limits	-40 to 250°	-40 to 250°	-40 to 250°	-40 to 250°	35 to 135°	35 to 135°
Sensor		Resistance	1000 Ω	1000 Ω	1000 Ω	1000 Ω		
		Sensitivity	2.2 Ω/°F	2.2 Ω/°F	2.2 Ω/°F	2.2 Ω/°F		
		Length		6"	5' or 22'	6"		6"
Input	Control Range							
	Impedance							
	Adjust	Setpoint Range	55 to 85°				Up to 20% R.H.	Up to 20% R.H.
		Calibration Range					±5%	±5%
		Throttling Range						
		Ratio				5 to 20/1		
Output	Voltage	Impedance						
		Range						
		Reference				Negative	Negative	Negative
	Power Supply	Voltage						
		Current						
		Regulation						
Load		Voltage						
		Current						
Power		Voltage				6.2 Vdc ±.4	24Vac±10%	24Vac±10%
		Current				1 mA	25 mA	25 mA

Barber-Colman Company
ENVIRONMENTAL CONTROLS DIVISION

1354 Clifford Avenue
P.O. Box 2940
Loves Park, IL U.S.A. 61132-2940

General Instructions

Solid State Controlled Device
Single Stage Relay CC 8101
Two Stage Relay CC 8102
Time Proportioning Relay CC 8103

General Information: Staging relays, Figure 1, are offered in various configurations which include single stage, dual stage, and dual stage with one stage containing heat anticipation. These staging relays require 120 volts AC for power source and contain a 20 volt DC regulated power supply which is used to supply power to other modules, such as controllers and adaptors. The staging relay receives a 1-15 volt DC input signal and by means of adjusting the drop-out voltage of each stage, the relays may be made to operate at any voltage in this 1-15 volt span. The differential of the relay is adjustable by selecting the proper pin on the printed circuit board.

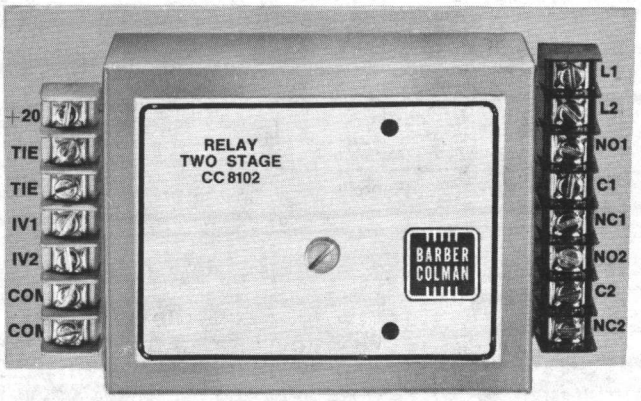

TWO STAGE SHOWN

Figure 1

The time proportioning version of the staging relays can be used to control heating-cooling applications. The heating side is built with a heat anticipation circuit which provides time proportioned control of electric heat. The second relay in the module can be used for cooling which would be connected to a single stage DX coil.

Adjustments: The staging relay has a potentiometer which will set the drop-out point of each relay between 2 - 12 volts DC. It also contains fixed deadband (pull-in to drop-out) of 1/2, 1, 2, and 4 volts DC, Figure 2. Pull-in point represents drop-out voltage plus deadband voltage setting.

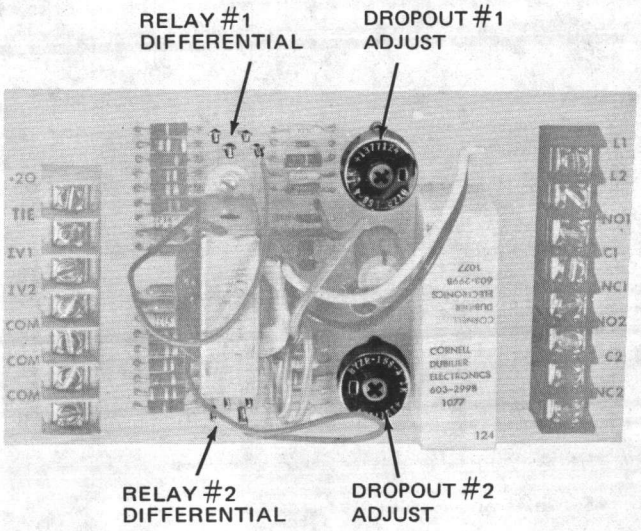

Figure 2

Ambient Temperature Limits:
Minimum +40°F; Maximum +135°F.

Installation Information: The module is designed to be track mounted and located in a local control panel. The unit is provided with a 7-1/2" piece of mounting track to permit quick and easy panel mounting, in a horizontal or vertical position. Location should be such that the unit is not subjected to severe vibration, shock, or ambient temperature conditions.

Make all connections in accordance with job wiring diagrams, complying with all national electrical codes. Wiring terminations are made on screw terminals located on the end of the printed circuit board. See Figure 3, 4, 5 for module wiring.

Construction: The CC 8101, 8102, and 8103 relays are designed primarily for track mounting in a local or central control panel. However, they can also be located inside the AD 8910 enclosure for remote field mounted installations.

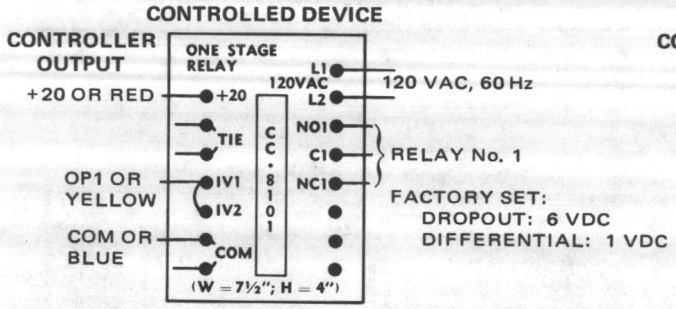

Figure 3

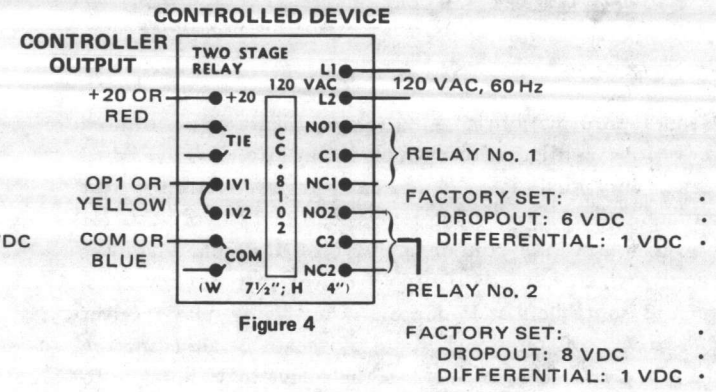

Figure 4

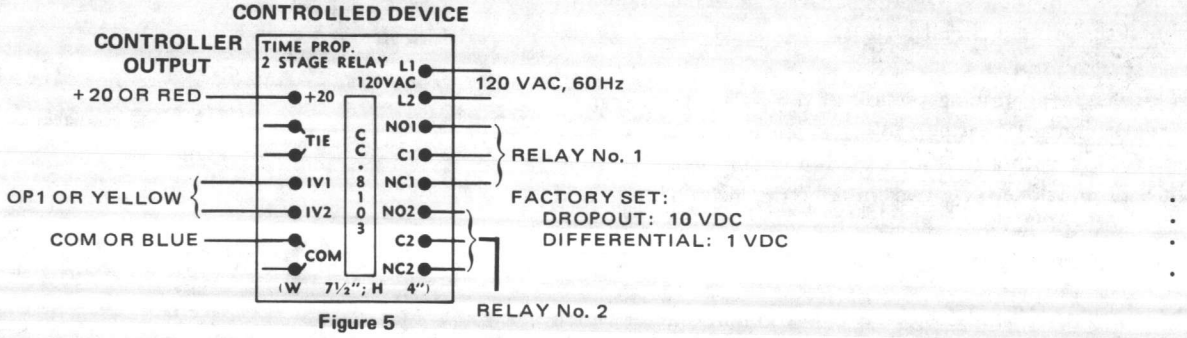

Figure 5

Calibration:

1. Apply power to relay module.
2. Connect VOM to input terminals IV1, IV2 and COM.
3. Set input voltage to desired drop-out voltage (IV1).
4. Adjust stage one for relay drop-out (R1).
5. Repeat steps 3 and 4 for stage two (R2).
6. Set differential to desired setting.

Service:

1. Check wiring per job wiring diagram.
2. Measure with VOM
   A. Power 120 VAC terminal L1 and L2.
   B. Power supply 20 VDC terminal +20 and COM.
   C. Input 1-15 VDC terminal IV1, IV2 and COM.
3. Consult EN 111 for additional service information.

Barber-Colman Company
ENVIRONMENTAL CONTROLS DIVISION
1354 Clifford Avenue
P.O. Box 2940
Loves Park, IL U.S.A. 61132-2940

LITHO IN U.S.A.

General Instructions

Power Demand Computers
PC-8402 and PC-8403
Pulse and Current Sensing

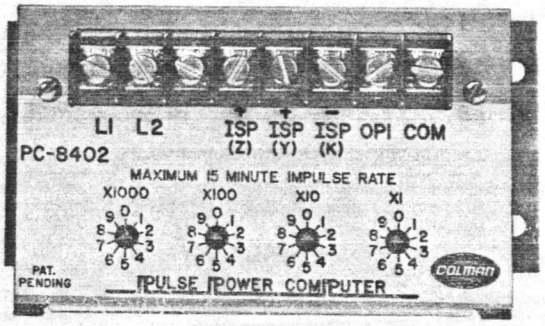

Pulse Power Computer
PC-8402

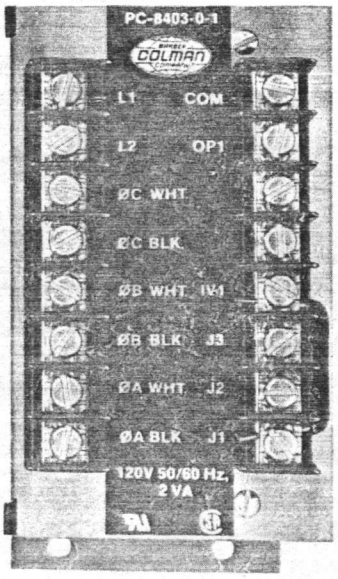

Current Probe
Power Computer
PC-8403

USES

With the supply of energy becoming critical and more expensive, we find the user employing energy management equipment to limit his usage and thus his costs. Many of these systems require a power transducer to provide a necessary power proportional signal. The PC-8402 and PC-8403 Power Computers supply this signal which can be applied to energy management systems recorders. These power computers are solid state electronic devices completely compatible with System 8000.

OPERATION

PC-8402

The PC-8402 Pulse Power Computer provides an output voltage of 1.5 to 10 Vdc in proportion to incoming power pulses generated by the utility company's isolation relays or other pulse signals. The computer will accept either a two-wire or three-wire alternating contact closure input. The PC-8402 sets its output voltage with respect to the number of pulses set on its dials and the rate of pulses currently applied to the device.

PC-8403

The PC-8403 current probe power computer provides an output voltage of 1.0 to 10 Vdc in proportion to the incoming current or currents from current transformers. These current transformers are located on the A, B or C phase lines of the secondary of the transformer supplying total building power. The computer will provide its output voltage with either 1, 2, or 3 current transformer inputs. The 3 current transformer inputs will provide the greatest accuracy in determining the total 3 phase system power. The PC-8403 sets its output voltage with respect to the level of input from the current transformers. The current transformer's maximum output must be five amperes with maximum rated input current.

FEATURES

PC-8402

1. Adjustable calibration from 0.1 to 11.1 pulse/second.
2. Single contact input (2-wire) or double contact alternating input (3-wire).
3. Output voltage linear with input pulses.

PC-8403

1. Adaptable to any power system through current transformer selection.
2. Operates on 1, 2 or 3 current transformer inputs.
3. Output voltage linear with input currents (1-5 amperes).

COMMON TO BOTH

1. Rugged plastic construction.
2. Small in size.
3. Easy-access screw terminal connections.
4. UL recognized.
5. Compatible with System 8000.

Table 1. Power Computer Selection Chart

Building Service			PC-8403 Current Probe Power Computer		PC-8402 Pulse Power Computer	
			Current Transformer Input	Power Signal	Input Signal	Power Signal
Voltage	Phase	Wires	Number of Current Transformers (Obtain Locally)	120 Vac +10 Vac -15 Vac 2 VA	Contact Closures from Isolation Relays (Obtain Locally) 2 or 3 Wire	120 Vac +10 Vac -15 Vac Less than 0.5 VA
Any	1	2	1			
	1	3	2			
	3	3	1, 2 or 3			
	3	4	1, 2 or 3			

PRE-INSTALLATION

Open the carton and visually inspect the device for part number and obvious damage before proceeding with the installation.

The four required mounting screws are not provided.

INSTALLATION

The power computers are designed for surface mounting. Locate these computers so they are not subjected to severe vibration, shock or ambient conditions. Ambient ratings are 40°F (4°C) to 140°F (60°C). Refer to Figure 1 for mounting hole dimensions.

DIMENSIONS

All Dimensions in Inches

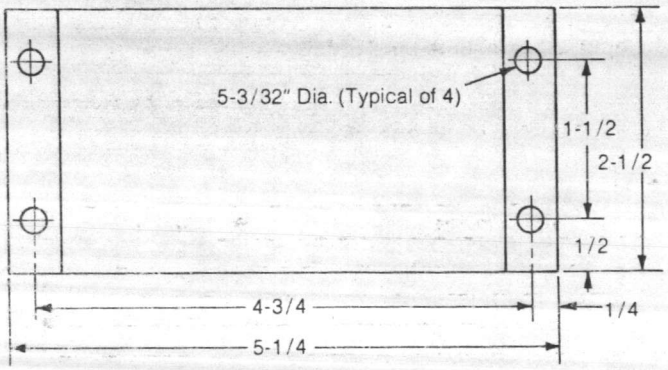

Base View — Shows mounting hole locations

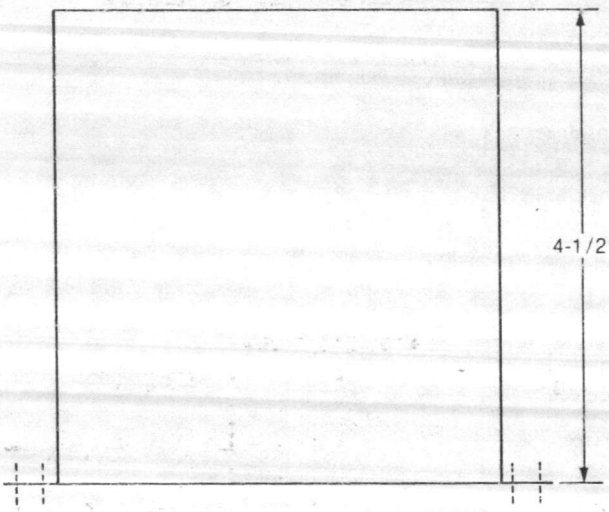

Side View — Maximum height shown here includes terminals

Figure 1.
Mounting Dimension for Both PC-8402 and PC-8403

INPUT

The PC-8402 Pulse Power Computer input wiring should be per Figure 2, using two or three 18 gauge wires. These wires do not have to be twisted or placed in conduit. The length may be up to 2500 feet.

OUTPUT

The PC-8402 output wiring should be per Figure 2 using 18 gauge twisted pair cable (6 turns per foot) or equivalent. Maximum distance of 1000 feet permissible. Never run leads in same conduit with line voltage.

CAUTION

Shielded cable (Belden 8422 or equivalent) must be used when it is necessary to install these OP1-COM signal leads in the same conduit with power wiring or when it is known that high RFI/EMI generating devices are near. Ground the shielded cable at the COM (-) terminal only.

Typical Wiring Connections for kW Pulse Signal Isolation Relays

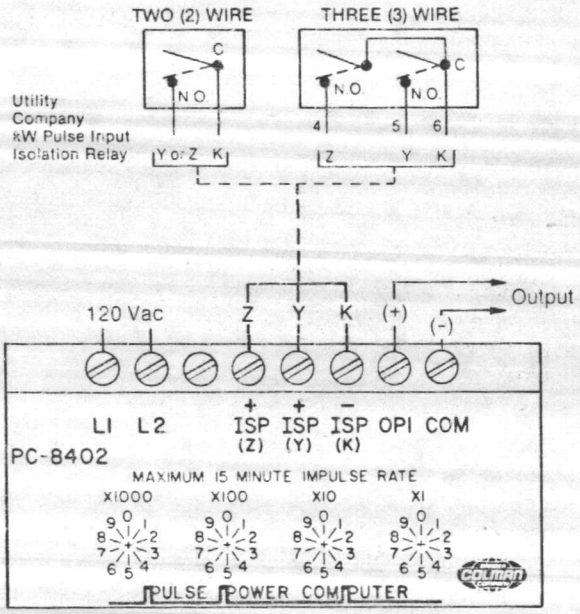

PC 8402 Pulse Power Computer Input Wiring

Caution
Minimum Dial Setting to be 200.

Figure 2. Typical Wiring Connections for PC-8402

PC-8402 PULSE POWER COMPUTER

WIRING

Make all connections in accordance with job wiring diagrams and in compliance with national and electrical codes.

CALIBRATION

There is no internal calibration for the PC-8402 pulse power computer.

FIELD ADJUSTMENT

Step 1. Determine the maximum number of pulses in the demand period.

Step 2. Calculate the number of pulses this rate will give in 15 minutes. (Example: No. 1 is 3000 in 30 minutes, No. 2 will be 1500.)

Step 3. Set dials to 1500 left to right. (See Figure 3.) Minimum setting is 200.

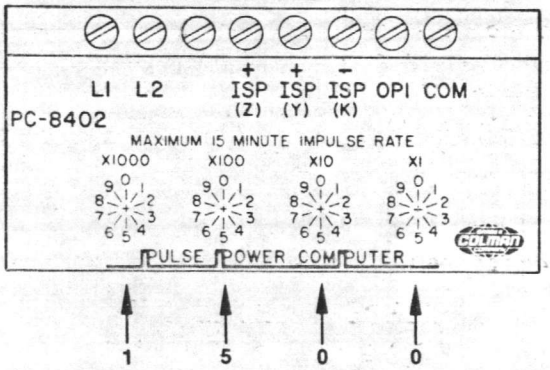

Figure 3.

CHECKOUT

The computer can be checked out by putting into the ISP+ and ISP- terminals the number of contact closures that are shown on the four dials in a 15 minute period of time. The unit must be powered by 120 Vac 50/60 Hz. The output from OP1 and COM will be 10 ±.2 Vdc under these conditions.

SERVICE

There is no field service for this unit. If defective, return to factory for repair.

PC-8403 CURRENT PROBE POWER COMPUTER

WIRING

Make all connections in accordance with job wiring diagrams and in compliance with national and electrical codes.

INPUT

The PC-8403 Current Probe Computer input wires from the current transformers should be wired per Figure 4 and are to be kept shorted together until installed on the terminals.

Distance vs. wire gauge for the leads between the current transformer and the PC-8403 are as follows:

Table 2.

Distance in Feet	Wire Gauge
200	#14
320	#12
500	#10
800	# 8

Jumper wires should be placed on the proper terminals depending on the particular system being measured. These wires must be installed to make the computer operate.

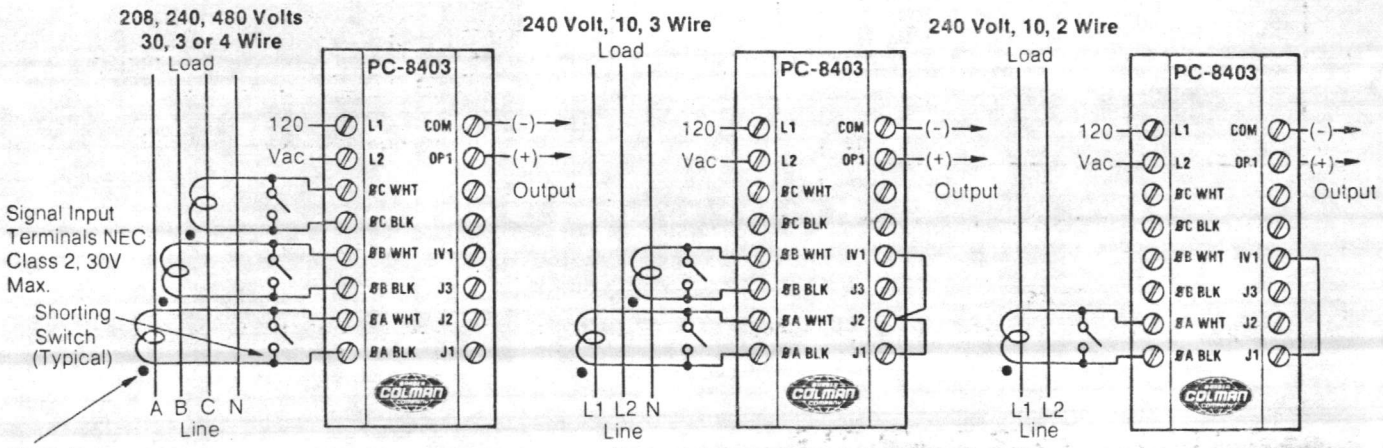

NOTE: Dot on current transformers should face line side unless otherwise noted.

Current Sensing Options

1. 0A, 0B, 0C— Jumper J1, J2 and J3 to IV1.
2. 0A, 0B -- Jumper J1 and J2 to IV1.
3. 0A -- Jumper J1 to IV1.

CAUTION: Electric shock hazard. CT secondaries must never be open when attached to service conductors. Install shorting switch on CT secondaries to permit removal of CT leads from PC-8403 during servicing.

Figure 4. Typical Wiring Connections for Load Current Sensing PC-8403

OUTPUT

The PC-8403 output wiring should be per Figure 4 using 18 gauge twisted pair cable (6 turns per foot) or equivalent. Maximum distance of 1000 feet permissible. Never run leads in same conduit with line voltage.

CAUTION

Shielded cable (Belden 8422 or equivalent) must be used when it is necessary to install these OP1-COM signal leads in the same conduit with power wiring or when it is known that high RFI/EMI generating devices are near. Ground the shielded cable at the COM (-) terminal only.

Table 3. Current Transformer Selection Chart

Maximum Building kW	Current Transformer Ratio				
	208V 30	240V 30	480V 30	240V 10 2 Wire	240V 10 3 Wire 2 Cts Required
50	125/5	125/5	—	200/5	100/5
100	250/5	250/5	125/5	400/5	200/5
150	400/5	400/5	200/5	600/5	300/5
200	500/5	500/5	250/5	800/5	400/5
250	700/5	600/5	300/5	1000/5	500/5
300	800/5	700/5	350/5	1200/5	600/5
350	900/5	800/5	400/5	1500/5	700/5
400	1000/5	1000/5	500/5	1600/5	800/5
450	1200/5	1000/5	600/5	1800/5	900/5
500	1500/5	1200/5	600/5	2000/5	1000/5
550	1500/5	1500/5	700/5	2500/5	1200/5
600	1600/5	1500/5	700/5	2500/5	1200/5
650	1800/5	1500/5	800/5	2500/5	1500/5
700	2000/5	1600/5	800/5	3000/5	1500/5
750	2000/5	1800/5	900/5	—	
850	2500/5	2000/5	1000/5	—	
900	2500/5	2000/5	1000/5	—	
1000	3000/5	2500/5	1200/5	—	
1300		3000/5	1600/5	—	
1500			1800/5	—	
1700	—		2000/5	—	
2100	—		2500/5	—	
2500	—		3000/5	—	

CALIBRATION

There is no calibration for the PC-8403 current probe power computer.

CHECKOUT

The current probe power computer can be checked out by applying 5 amps RMS ac to any of the three desired current transformer inputs (see Figure 4) and jumpering the IV1 terminal to the corresponding phase input J1, J2 or J3. The output OP1 to COM should measure 10 ± .2 Vdc. Lower RMS currents will produce proportionally lower voltage outputs. See Figure 3.

SERVICE

It is necessary to follow the procedure below if PC-8403 is to be disconnected for servicing.

Step 1. Open all disconnects which provide power to the panel in which PC-8403 is installed.

Step 2. Close the switch provided for shorting the current transformer secondaries. This switch should have been installed by the local utility company or electrical contractor and will be located outside the panel containing the PC-8403.

If a current transformer shorting switch has not been installed, it will be necessary to open the disconnect which supplies current to the conductors monitored by the current transformers.

Step 3. CAUTION: ELECTRIC SHOCK HAZARD! DO NOT REMOVE THE CURRENT TRANSFORMER WIRING ATTACHED TO THE 0A, 0B, OR 0C TERMINALS UNTIL THE CT SECONDARIES ARE SHORTED OR NO CURRENT IS FLOWING IN THE CONDUCTORS MONITORED BY THE CURRENT TRANSFORMERS.

Step 4. PC-8403 can now be removed for replacement.

Step 5. Install the new PC-8403. Connect all wiring to appropriate terminals.

Step 6. Be certain that the current transformer secondaries are connected to PC-8403. Open the CT shorting switch.

Step 7. Close the panel disconnect to place PC-8403 back in service.

Barber-Colman Company
ENVIRONMENTAL CONTROLS DIVISION
1300 Rock Street, Rockford, Illinois, U.S.A., 61101

LITHO IN U.S.A.

F-18552 BK

General Instructions

TC-4100 Series
TC-4200 Series
Bulb Thermostats
Return Air Thermostats

For on-off control of media temperature in ducts, tanks, liquid lines, etc.

TC-4100 Series **one stage** units control one electrical circuit. Available in single or dual bulb configurations. (See Performance Table.)

TC-4200 Series **two stage** units control two electrical circuits in sequence. Available in single or dual bulb configurations. (See Performance Table.)

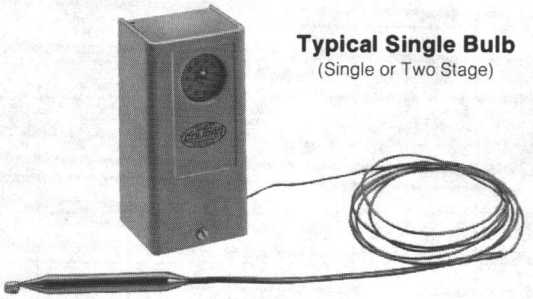

Typical Single Bulb
(Single or Two Stage)

Dual bulb units are used to vary the control point of the controlled media as a function of outside air temperature. The ratio specified is outdoor to indoor. A unit with a 1 to 1-1/2 ratio will increase the water temperature 1-1/2°F for a 1°F decrease in outdoor temperature.

Air bulb units feature a coiled, fast responding air bulb. Used in return air control applications.

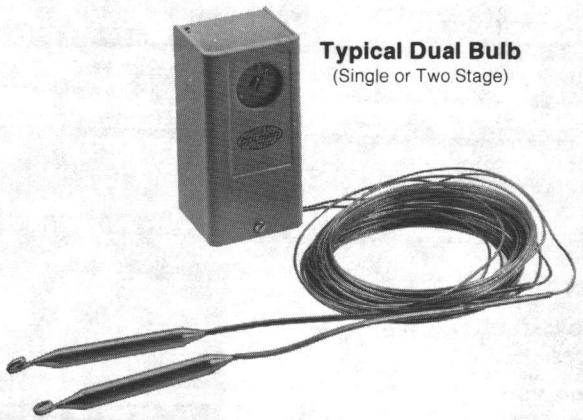

Typical Dual Bulb
(Single or Two Stage)

Device: Liquid filled thermal element actuates one snap acting SPDT switch per stage. Large color coded terminals. Setpoint adjustment dial plate is marked in °F on one side and °C on the other. The thermal differential is adjustable within the limits shown in the performance table. The mechanism is enclosed in a metal case and the cover, and has 1/2-inch to 3/4-inch conduit opening in the bottom of the case. Remote bulbs are suitable for immersion, duct, or outside air mounting.

Dimensions

Bulb Units: 2-1/4" (57 mm) Wide × 4-5/8" (117 mm) High × 2" (51 mm) Deep.

Air Bulb Units: 2-1/4" (57 mm) Wide × 9" (229 mm) High × 2" (51 mm) Deep.

Typical Air Bulb
(Single or Two Stage)

Electrical Rating: All Units Except TC-4115*

Switch Rating (50/60 Hz)	24V	120V	240V
Full Load Amps	9.8	9.8	8.0
Locked Rotor Amps	58.8	58.8	48.0
Pilot Duty VA	60	360	360
Non-Inductive Amps (Resistive)	—	—	—
Single Stage	22	22	22
Two Stage	16	16	8.0

*TC-4115 for System 8000 and dry circuit switching.
Electrical Rating: 1.0 amp at 24 Vac; .25 amp at 24 Vdc.

Performance and Selection Table

Type	Part Number	Setpoint Adjustment Range	Dual† Bulb Ratio	Dimensions			Differential		Maximum Safe Bulb Temperature	Case Ambient Temperature
				Capillary (Copper)	Bulb (Copper)		Factory Set	Adjustable		
Single Stage Single Bulb	TC-4111	-40 to 120°F		6′	3/8 × 4″		3°F	3 to 16°F	170°F	-40 to 150°F
	TC-4111-020			20′						
	TC-4112	100 to 260°F		6′					310°F	
	TC-4115*	-40 to 120°F		10′ Armored					170°F	
	TC-4121									
	TC-4122	100 to 260°F							310°F	
	TC-4123	190 to 350°F							400°F	
Single Stage Dual Bulb	TC-4151	70 to 120°F	1:1-1/2 **	30′ Each Bulb	Indoor 3/8 × 4″	Outdoor 3/8 × 5-1/2″	3°F	1.5 to 10°F	Total of indoor and outdoor temperatures must not exceed 280°F	-40 to 150°F
	TC-4152		1:1		3/8 × 4″	3/8 × 4″		3 to 16°F		
One Stage Air Bulb	TC-4166	50 to 90°F		None	Coiled 2-1/2 × 2″		2°F Fixed		-40 to 145°F Safe Bulb Range	-40 to 150°F
Two Stage Single Bulb	TC-4211	-40 to 120°F		6′	3/8 × 4″		3°F	Per Stage Fixed	170°F	-40 to 150°F
	TC-4221			10′ Armored				Between Stages 2 to 10°F	310°F	
	TC-4222	100 to 260°F							400°F	
	TC-4223	190 to 350°F								
Two Stage Dual Bulb	TC-4251	70 to 120°F	1:1-1/2 **	30′ Each Bulb	Indoor 3/8 × 5-1/2″	Outdoor 3/8 × 4″	3°F	Per Stage Fixed Between Stages 1.5 to 6.5°F	Total of indoor and outdoor temperatures must not exceed 280°F	-40 to 150°F
	TC-4252		1:1		3/8 × 4″	3/8 × 4″		2 to 10°F		
Two Stage Air Bulb	TC-4266	50 to 90°F		None	Coiled 2-1/2 × 2″		3°F	Per Stage Fixed 2°F Between Stage Adj. 1 to 5°F	-40 to 145°F Safe Bulb Range	-40 to 150°F

*TC-4115 for System 8000 and dry circuit switching. Electrical Rating: 1.0 amp at 24 Vac; .25 amp at 24 Vdc.

**TC-4151 and TC-4251 — For 1-1/2:1 ratio reverse bulbs and use extra dial supplied with unit.

†First number of reset ratio typically indicates outdoor air temperature change required to increase the setpoint by the second number.

Ratio Selection Table

Outdoor Temperature (°F)	Ratio	Change in Water Temperature for Different Ratios as Outdoor Temperature Drops from 70°F to Design Temperature					
		Dial Set at 70°F	Dial Set at 80°F	Dial Set at 90°F	Dial Set at 100°F	Dial Set at 110°F	Dial Set at 120°F
-30	1 to 1-1/2	70 to 220	80 to 230	90 to 240	100 to 250	110 to 260	120 to 270
	1 to 1	70 to 170	80 to 180	90 to 190	100 to 200	110 to 210	120 to 220
	1-1/2 to 1	70 to 137	80 to 147	90 to 157	100 to 167	—	—
-20	1 to 1-1/2	70 to 205	80 to 215	90 to 225	100 to 235	110 to 245	120 to 255
	1 to 1	70 to 160	80 to 170	90 to 180	100 to 190	110 to 200	120 to 210
	1-1/2 to 1	70 to 130	80 to 140	90 to 150	100 to 160	—	—
-10	1 to 1-1/2	70 to 190	80 to 200	90 to 210	100 to 220	110 to 230	120 to 240
	1 to 1	70 to 150	80 to 160	90 to 170	100 to 180	110 to 190	120 to 200
	1-1/2 to 1	70 to 123	80 to 133	90 to 143	100 to 153	—	—
0	1 to 1-1/2	70 to 175	80 to 185	90 to 195	100 to 205	110 to 215	120 to 225
	1 to 1	70 to 140	80 to 150	90 to 160	100 to 170	110 to 180	120 to 190
	1-1/2 to 1	70 to 117	80 to 127	90 to 137	100 to 147	—	—
+10	1 to 1-1/2	70 to 160	80 to 170	90 to 180	100 to 190	110 to 200	120 to 210
	1 to 1	70 to 130	80 to 140	90 to 150	100 to 160	110 to 170	120 to 180
	1-1/2 to 1	70 to 110	80 to 120	90 to 130	100 to 140	—	—
+20	1 to 1-1/2	70 to 145	80 to 155	90 to 165	100 to 175	110 to 185	120 to 195
	1 to 1	70 to 120	80 to 130	90 to 140	100 to 150	110 to 160	120 to 170
	1-1/2 to 1	70 to 103	80 to 113	90 to 123	100 to 133	—	—
+30	1 to 1-1/2	70 to 130	80 to 140	90 to 150	100 to 160	110 to 170	120 to 180
	1 to 1	70 to 110	80 to 120	90 to 130	100 to 140	110 to 150	120 to 160
	1-1/2 to 1	70 to 97	80 to 107	90 to 117	100 to 127	—	—

Dual Bulb Selection

On the dual bulb units, indoor and outdoor bulbs are determined by the ratio selected. See Performance and Selection Table. Ratio refers to the outdoor air temperature change compared to the water temperature change. The dial setpoint is the water temperature setpoint when the outdoor temperature is 70°F.

To select ratio, it is necessary to know only: (1) outdoor design temperature, (2) maximum water temperature at outdoor design temperature, and (3) desired water temperature at 70°F outdoors. Use the Ratio Selection Table to determine the required ratio based on this information and set the dial per item (3). NOTE: If a 1-1/2:1 ratio is selected, the extra dial supplied with the unit must be used.

Example: Select ratio for an installation with a -10°F design temperature and estimated supply water temperatures of 75°F at 70°F outdoors and 125°F at -10°F outdoors. From Ratio Selection Table, -10°F for 1-1/2:1 ratio, note by interpolation (70°F to 123°F with dial at 70°F, 80°F to 133°F with dial at 80°F) that water temperature varies from 75°F to 128°F as outdoor temperature drops from 70°F to -10°F.

For this application, the 1-1/2:1 ratio should be selected. The extra dial supplied with the unit would be used, and the dial set at 75°F.

Options

Single bulb units are available with optional capillary lengths of 20′ or 45′.

Accessories: (Order Separately)

Part No.	Description	
AT-201*	Bulb Well	Copper, 3/4″ MNPT 9-1/2″
AT-203*		Stainless, 3/4″ MNPT 9-1/2″
AT-206		Copper, 1/2″ MNPT 4-1/2″
AT-208	Duct Mounting Kit for Bulb	
AT-209	Liquid Line, or Tank, Bulb Mounting Kit. A Bulb Well is recommended. (Required with AT-201 or AT-203.)	
AT-210	Concealed Adjustment Kit. Includes plate to conceal setpoint adjustment and lock cover screw.	
AT-211	Outside Bulb Shield	

*Requires AT-209 Bulb Mounting Kit.

Immersion Well AT-20X

Bulb Duct Mounting Kit AT-208

Concealed Adjustment Kit AT-210

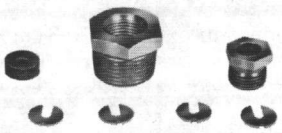

Liquid Line or Tank Bulb Mounting Kit AT-209 (Also Required with AT-201 or AT-203 Well)

Pre-Installation

Refer to the INSTALLATION and Performance Data applicable to the part number of the device being installed. Make a visual inspection of the device for obvious signs of damage. Avoid locations where excessive moisture, corrosive fumes, vibration or high ambient exists.

Installation

Location

Locate the device allowing proper distance to the bulb location. The case can be mounted in any position. Refer to Figure 1 for case dimensions.

Procedure

Remote Bulb Models
Air Bulb Models — Mounting in Return Air Duct

1. Remove cover and provide 2 holes for #10 round head screws using the housing as the template or by using the dimensions shown in Figure 1.
2. Partially insert the mounting screws in the screw holes. Fit the housing over the screws, slide housing down on the screws and tighten the screws.

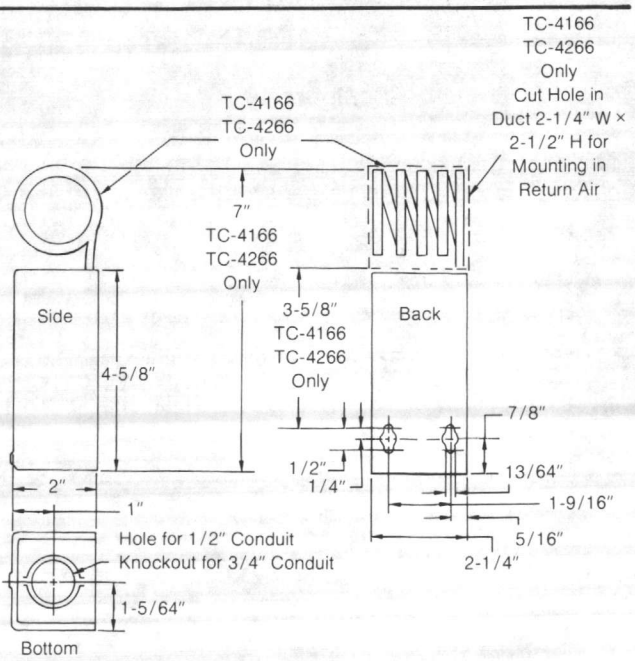

Figure 1. Case Dimensions

Checkout

After installing a thermostat, make an initial check of the switching action. Verify the switch action by listening to the switch contacts.

1. Turn the setpoint dial to a temperature above ambient. This should cause the thermostat to switch, making orange to brown.
2. Turn the setpoint dial setting down gradually. Orange to brown must break, making orange to red.
3. Compare the differential of the device to the differential shown on the performance charts by turning the dial. The differential of the devices is the difference in dial reading between the make of orange to brown and the make of orange to red on single switch units.

Run/Adjust

Setpoint

Screwdriver adjustment. Scales dual marked °F on front and °C on back. To change scale, remove spring retaining ring, select scale and replace retaining ring.

Differential Adjustment

The differential is adjustable by turning the adjustor located on side of device (see Figure 10).

Single stage: Each line represents approximately 3°F change.

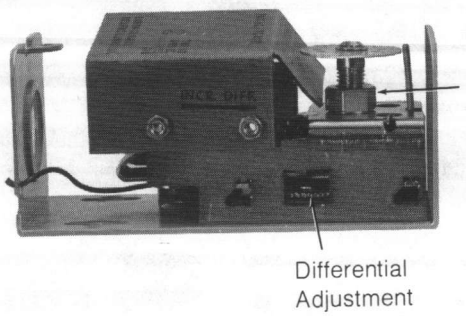

Figure 10

Two stage: Each notch represents approximately 2°F change between stages. (Differential per switch is fixed.)

To adjust differential:

1. Disconnect power to unit.
2. Remove cover.
3. Turn adjustor to approximately desired position.
4. Check out by turning dial and noting dial readings where switch contacts make.
5. After changing differential, recalibrate. See Service and Repair.

Service and Repair

Calibration

1. With all power disconnected, soak bulb(s) for 10 minutes at known temperature (must be 70°F for dual bulb).
2. Turn dial and note where switch contacts make.
3. Turn dial midway between click points.
4. Turn the calibration nut (located under dial) until the temperature of the bulb is indicated on the dial. (See Figure 10.)

NOTE

On two-stage units follow above procedure. "LO" switch is first stage on cooling applications. "HI" switch is first stage on heating applications.

Repair

Field repair is not recommended. Replace defective device.

Barber-Colman Company
ENVIRONMENTAL CONTROLS DIVISION

1354 Clifford Avenue
P.O. Box 2940
Loves Park, IL U.S.A. 61132-2940

LITHO IN U.S.A.

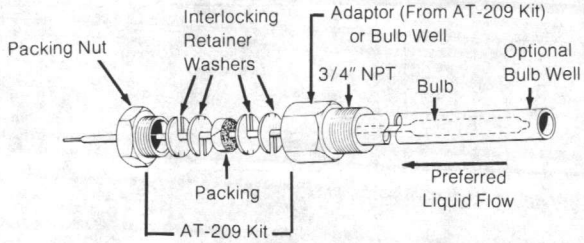

Figure 5. AT-201 or AT-203 Installation

Install bulb well or adaptor from AT-209 into 3/4" FNPT opening. Place packing nut, washers, and packing from AT-209 over bulb support section and insert bulb into well or AT-209 adaptor. Push interlocking washers and packing into well or adaptor and tighten packing nut until firmly seated.

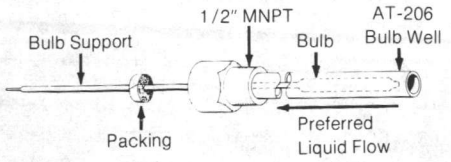

Figure 5A. AT-206 Installation

Install AT-206 bulb well into 1/2" FNPT opening. Place packing (included with AT-206) over bulb support section and insert bulb into well. Push packing into nut on well using a screwdriver.

Concealed Setpoint and Lock Cover Screw

Order AT-210 Concealed Adjustment Kit separately.

1. Peel off adhesive film from the concealed adjustment plate and place into the recess of cover.
2. Remove screw from cover.
3. Install lock cover screw provided with AT-210.

Wiring

The thermostat has one 1/2-inch to 3/4-inch conduit opening in bottom of housing. Make all electrical connections in accordance with the job wiring diagram and in compliance with national and local electrical codes. Terminal coding and switch action is shown in Figure 6, and Figure 7 shows two stage switching sequence.

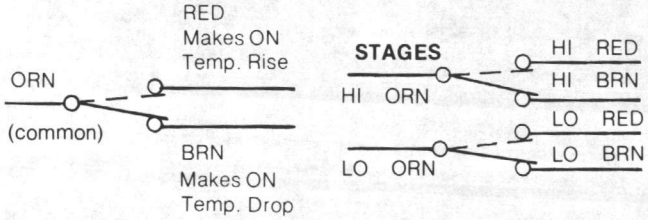

Figure 6. Terminal Coding and Switch Action

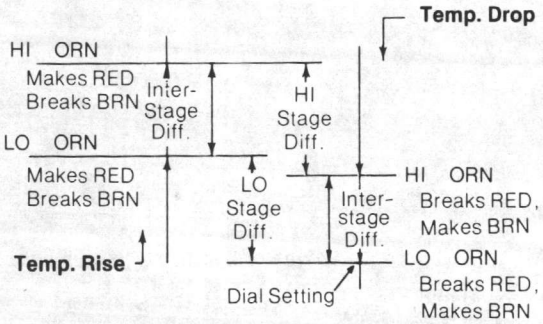

Figure 7. Two Stage Switch Sequence

Typical Applications

Figure 8 shows a typical heating or cooling application for single stage units. Figure 9 shows typical heating and cooling applications for two stage units.

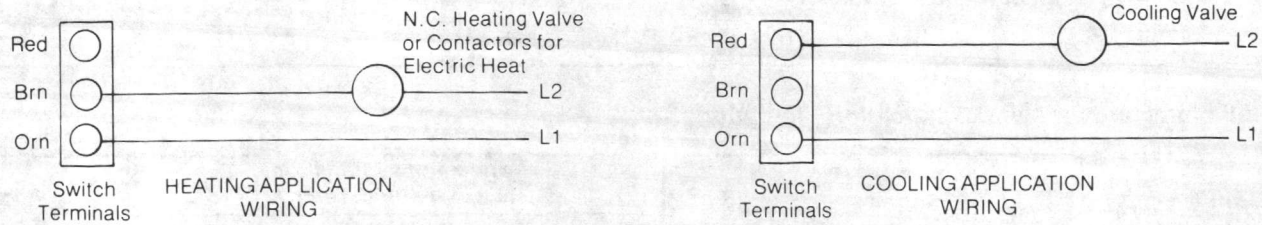

Figure 8. Typical Heating or Cooling Application for Single-Stage Units

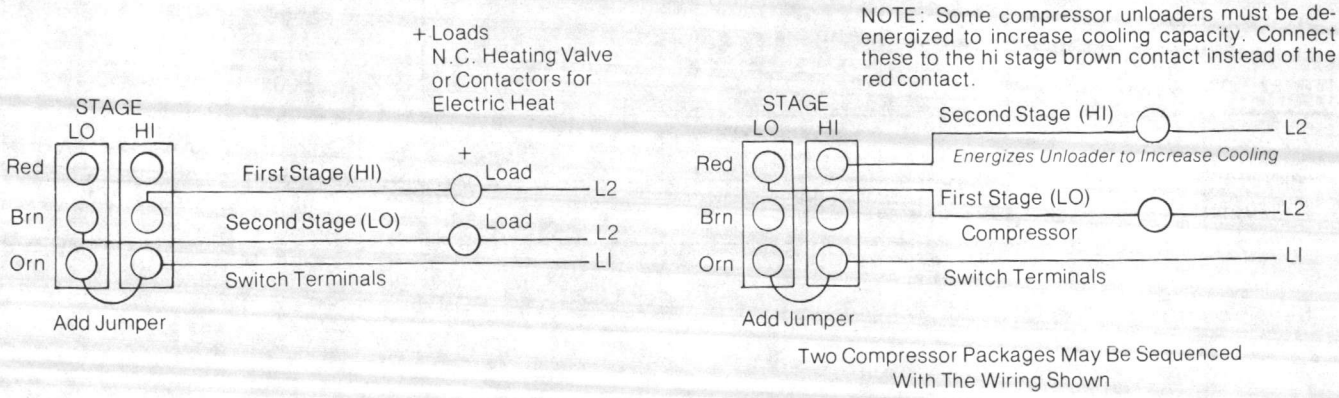

TYPICAL HEATING APPLICATION WIRING FOR TWO-STAGE UNITS

Figure 9

TYPICAL COOLING APPLICATION WIRING FOR TWO-STAGE UNITS

Air Bulb Models

Mounting Outside of Return Air Duct

1. Prepare duct for mounting by cutting hole and providing mounting screw holes per Figure 1.
2. Fabricate a cover as shown in Figure 2.
3. Carefully roll bulbs toward back of unit and insert through 2-1/4″ × 2-1/2″ hole.
4. Remove cover and attach unit to duct with #10 screws.
5. Attach cover over 2-1/4″ × 2-1/2″ hole.

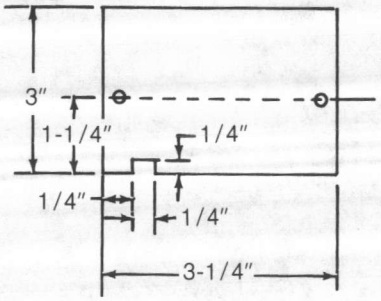

Figure 2. Field Supplied Duct Hole Cover Plate

Remote Bulb Mounting — Duct and Outdoor

Maximum insertion length (6 inches). Maximum safe bulb temperature above scale range. For dual bulbs, total of indoor and outdoor bulb temperatures must not exceed (280°F).

Duct: Install bulb with AT-208 kit as shown in Figure 3.

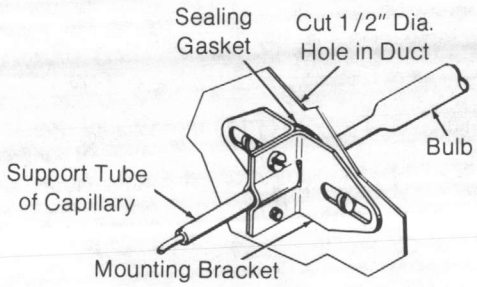

Figure 3. Duct Mounting with AT-208

Outdoor: Install with AT-211 kit as shown in Figure 4.

1. Mount bulb to outside wall or surface with bulb clip.
2. Place shield over bulb and fasten to mounting surface.

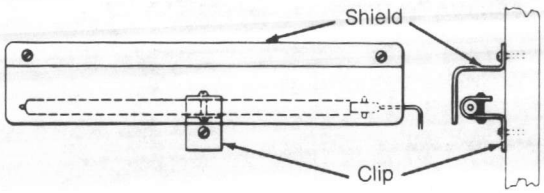

Figure 4. Outdoor Mounting with AT-211

Bulb Mounting — Liquid Line and Tank

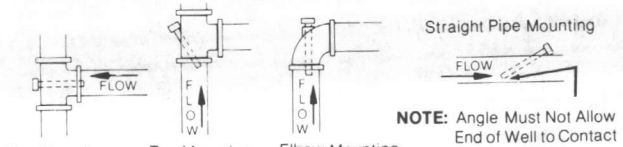

Installation Hardware and Application Limitations

Part No.	Description	Mtg. Fitting	Insertion Size	Applications Limitations at 250°F Fluid Temp.*		Installation Per Figure
				Max. Recommended Velocity (FPS)	Max. Recommended Static Press. (PSIG)	
AT-201	Copper Bulb Well**	3/4″ MNPT	1/2″ Dia. O.D. 9-1/2″ Long	11	250	5
AT-203	Stainless Steel Bulb Well**			20	500	
AT-206	Copper Bulb Well	1/2″ MNPT	1/2″ Dia. O.D. 4-1/2″ Long	11	250	5A
AT-209†	Bulb Mounting Kit	3/4″ MNPT	Length of Bulb	4	150	5

*Max. Recommended Fluid Temperature is 350°F.

**Requires AT-209.

†Recommended Installation is with a Bulb Well.

General Instructions

CP-8102 Electronic Two Input Temperature or Humidity Controller

FUNCTIONS

Electronic controller receives temperature or humidity sensor inputs and sends a variable electronic signal, 1 to 15 Vdc, to up to six System 8000® actuators or relays (controlled devices). Additional devices can be controlled with the use of adapters. These actuators or relays operate heating, cooling, humidification or dehumidification equipment in HVAC systems.

FEATURES AND BENEFITS

The reliable, easy to install CP-8102 electronic controller incorporates an amplifier with inputs for 1000ohm Balco® temperature sensors, humidity sensors or remote setpoint adjustor. Two setpoint dials, ratio authority dials, throttling range dials and calibration potentiometers are visable and accessible without removing controller cover allow for easy field adjustment. Coded screw terminals make sensor, remote setpoint, power supply and output signal wiring easy to install and change. The CP-8102 controller is used with other System 8000 devices.

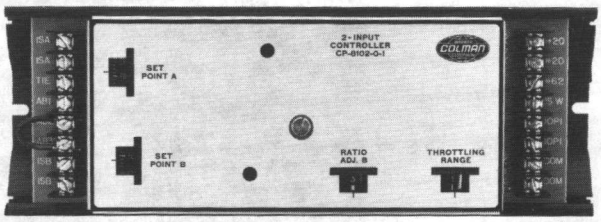

CP-8102

Wiring Connections: Coded screw terminals for all control inputs and outputs.

Safe Ambient Temperature Limits:

Operation: 40 to 135°F (4.4 to 57°C)
Storage: -40 to 160°F (-40 to 71°C)

Dimensions: 4" (102 mm) high × 11" (279 mm) wide × 2-1/2" (64 mm) deep

Table 1. Specifications

Part Number	Control Dial Range Setpoint "A"	Control Dial Range Setpoint "B"	Throttling Range for 3 Vdc Output Change	Authority Ratio Adjustment Setpoint "A" Setpoint "B"	Control Output Voltage†	Power Required	Power Supply Available
CP-8102	20 to 120°F	20 to 120°F	Adjustable 2 to 10°F by Dial*	.5:1 to 25:1 Adjustable by Dial	1 to 15 Vdc 10 mA Max. Factory Set for D.A.	20 Vdc 23 mA	6.2 Vdc 7 mA Max.
CP-8102-116	-6 to 48°C	-6 to 48°C	Adjustable 1 to 6°C by Dial*				

* See ADJUSTMENTS for additional throttling ranges.
† Units factory calibrated for 7.5 Vdc output with sensor at setpoint temperature.

Options: None.

ACCESSORIES:

AD-8122	Signal adaptor for dual outputs (two direct acting)
AD-8123	Signal adaptor for dual outputs (one direct, one reverse acting)
AD-8124	Signal adaptor for dual outputs (one reverse, one direct acting)
AD-8912	12" enclosure
AD-8969-201	Off set resistor kit: 5, 10, 15 & 20°F
AD-8969-901	Extended throttling range jumper
ASP-301	Power supply required for HSP-6X81 humidity transmitter
ASP-581	Indication meter 20 to 80% RH
AT-8122	Remote setpoint adjuster, dual scale 20 to 120°F (-6 to 49°C)
AT-8155	Remote setpoint adjuster, dual scale 50 to 250°F (10 to 121°C)
AT-8158	Remote setpoint adjuster, dual scale 55 to 85°F (13 to 29°C)
AT-8222-101	Setpoint scale for humidity 20% to 100%
AT-8435	Remote setpoint adjuster, dual scale 50 to 450°F (10 to 232°C) for use with TS-8204 only
CN-8101	Multi-purpose bridge
HS-8101	Room humidity sensor
HS-8201	Duct humidity sensor
TS-8101	Room sensor
TS-8111	Room sensor with setpoint
TS-8131	Room button type sensor
TS-8201	Duct/immersion sensor
TS-8204	High temp. duct/immersion sensor requires AT-8435 remote setpoint for all applications except differential control
TS-8241	Diffuser sensor
TS-8261	Light fixture sensor
TS-8331	Lagged sensor (CN-8101 is required)
TS-8405	5' averaging sensor
TS-8422	22' averaging sensor
TS-8501	Outdoor sensor
TS-8531	Solar sensor (CN-8101 is required)
TS-8533	Econostat sensor
Tool-201	Calibration kit for system 8000

DEFINITIONS

Mode of Operation: Either direct-acting or reverse-acting.

Direct-acting (D.A.) means that an increase in temperature at the sensor(s) causes the voltage output (OP1) to increase.

Reverse-acting (R.A.) means that an increase in temperature at the sensor(s) causes the voltage output (OP1) to decrease.

Reset Control Action: The direction of reset determines whether input A setpoint is reset upward or downward on a temperature decrease at input B.

Direct reset: (D.R.) A temperature decrease on input B resets input A setpoint downward.

Reverse reset: (R.R.) A temperature decrease on input B resets input A setpoint upward.

LITHO IN U.S.A. 9-84

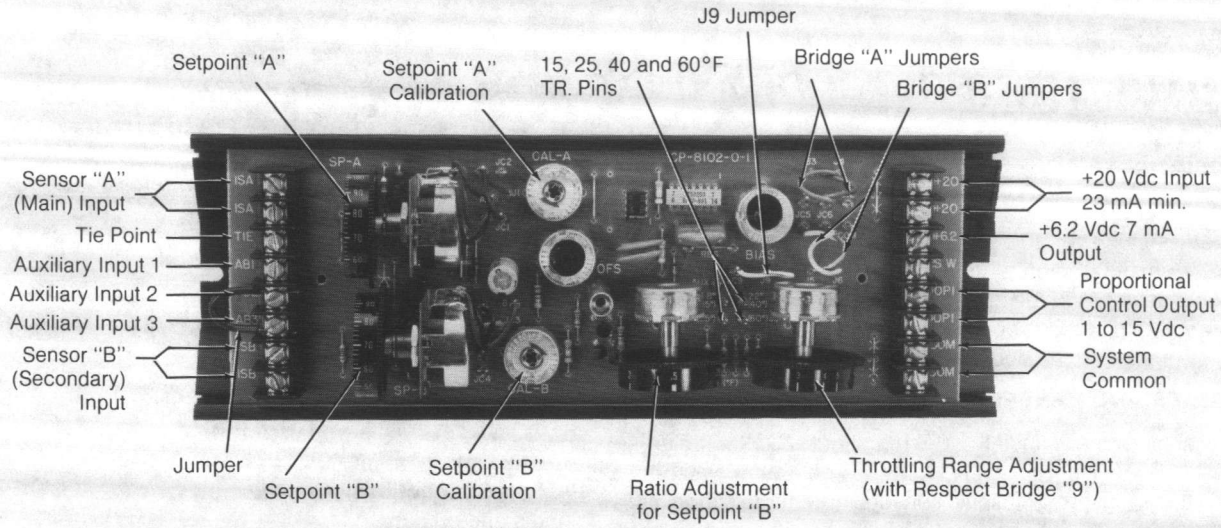

Figure 1. CP-8102

CONTROL TERMINAL INPUTS (See Figure 1)

ISA: Any TS-8000 Temperature Sensor (1000 ohm Balco)

ISB: Any TS-8000 Temperature Sensor (1000 ohm Balco)

AB1, AB2, AB3: Auxiliary inputs; any remote setpoint adjuster AT-8000 series, HS-8X01 humidity sensor, CN-8101 multipurpose bridge

CONTROL TERMINAL OUTPUT (See Figure 1)

OP1: 1 to 15 Vdc (10 mA maximum). Units factory calibration for 7.5 Vdc output with sensor at setpoint temperature.

ADJUSTMENTS: (See figure 1)

Temperature Setpoint "A": By dial 20 to 120°F (−6 to 48°C), or by remote setpoint adjuster (See Accessories).

Temperature Setpoint "B": By dial 20 to 120°F (−6 to 48°C), or by remote setpoint adjuster (See Accessories).

Setpoint "A" Calibration: By potentiometer.

Setpoint "B" Calibration: By potentiometer. For reset control, set Setpoint "B" at value where Setopint "A" will be reset. Adjust Setpoint "A" at control point required with no reset from sensor "B".

THOTTLING RANGE: By dial 2 to 10°F, 1 to 6°C. By pin selection 15, 25, 40 and 60°F (8, 14, 22, 33°C). Remove J9 jumper from JC9 and attach to required throttling range pin. By extended throttling range adjuster, AD8969-901 (order separately), 55, 65, 75, 85, 100, 115, 125 and 140°F (31, 36, 42, 47, 56, 64, 69 and 78°C). The throttling range is the sum of the T.R. pins connected.

AUTHORITY RATIO ADJUSTMENT: By dial .5 to 25:1. Ratio is the number of degrees change at Sensor "B" required to reset Setpoint "A" one (1) degree. Example: 25:1 means a 25°F (14°C) change at Sensor "B" will reset Setpoint "A" 1°F (.5°C).

Table 2

Controller Function	Jumper Connections Required	
	Bridge "A"	**Bridge "B"**
Direct Acting*	J4 to JC6 J3 to JC5	J5 to JC5 J6 to JC6
Reverse Acting	J4 to JC5 J3 to JC6	J5 to JC6 J6 to JC5
Internal Setpoint Active*	J1 to JC1	J2 to JC3
Internal Setpoint Inactive for Remote Setpoint	J1 to JC2	J2 to JC4
Disable Bridge "B" for Single Sensor Input	Remove Jumper from AB2 to AB3	

* As supplied from factory.

To Obtain Reverse Reset: Both bridges should have the same action. Example: both direct acting, or both reverse acting.

To Obtain Direct Reset: Bridges should have different action. Example: one direct and one reverse acting.

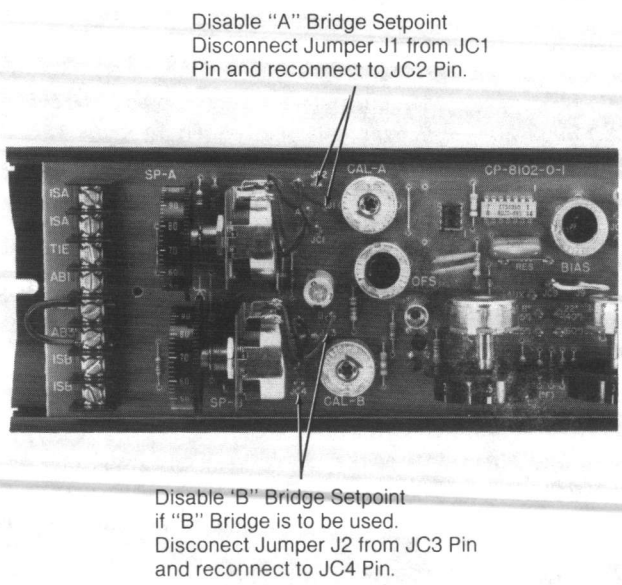

Figure 2. Disabling Setpoint "A" and/or Setpoint "B"

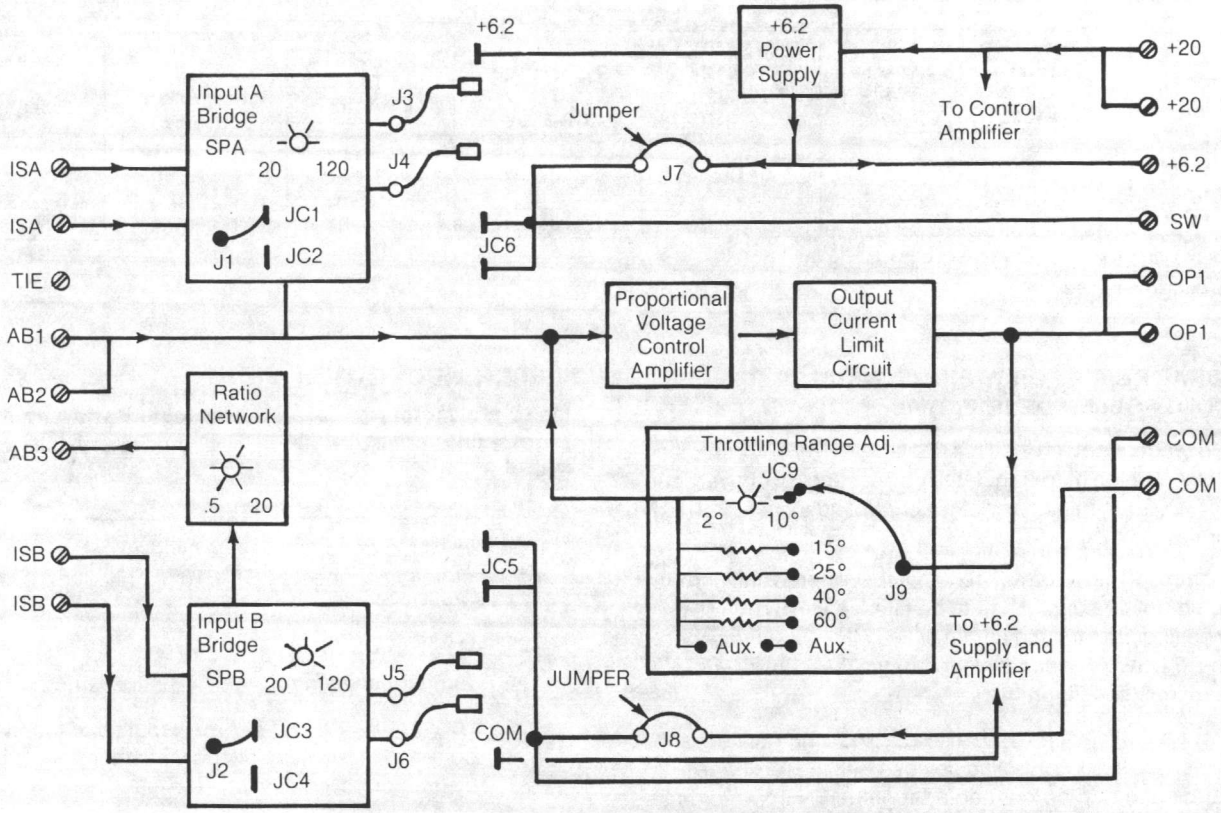

Figure 3. CP-8102 Controller Block Diagram

PRE-INSTALLATION: Open the carton and visually inspect the device for part number and obvious defects before proceeding with the installation.

NOTE

Mounting screws are not provided.

INSTALLATION: Device may be mounted, in any position, in an inside location near the controlled equipment using the two slots in the track. AD-8912 enclosures can be ordered separately for remote installations.

CAUTION

Avoid locations where excessive vibration, moisture, corrosive fumes or vapors are present, or where high radio frequency or electro-magnetic interference generating devices are near.

See Figure 4 for mounting dimensions.

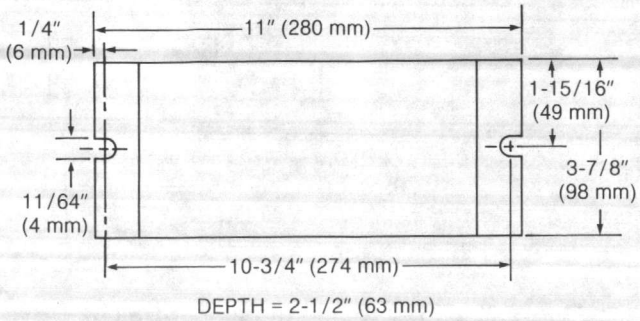

Figure 4. Mounting Dimensions

GENERAL WIRING INFORMATION

Make all connections according to job wiring diagrams and in compliance with national and local codes.

Two separate No. 18 twisted pair wires (six turns per foot [.3m]).
Class II, low voltage, are suitable for up to 1000 feet (300 m) for the sensor leads. See table 3 for longer runs.

CAUTION

Never run line voltage in the same conduit with unshielded sensing element leads. Use copper conductors only.

Shielded cable (Belden No. 8422 or equivalent) must be used when it is necessary to install the DC signal leads in the same conduit with power wiring, or when it is known that high RFI/EMI generating devices are near. Ground the shield at the controller only on the COM (-) terminal.

Table 3. Wiring Lengths

Wire Gauge	LENGTH OF RUN IN FEET**						
	"HS" Sensor To CP-8102	"TS" Sensor To CP-8102	CN-8101, AT-81X4 TS-8601 To CP-8102	"HSP" Transmitter To CP-8102	TSP-8101 To CP-8102	CP-8102 To Controlled Device	CP-8102 To Adaptor*
22	125	—	—	—	Should be	—	—
18	300	1,000	1,000	250	in Same	1,000	1,000
16	—	2,250	—	—	Panel as	2,250	2,250
14	—	4,000	—	—	Controller	4,000	4,000

* AD-8101, AD-812X, AD-8201, AD-8301, AD-8501
**1 Ft. approx. .3 meter

GENERAL RULES FOR WIRING CP-8102 TO CONTROLLED DEVICE(S)

1. Never connect red lead (or +20 terminal) of any controlled device which has a regulated power supply to the red lead (or +20 terminal) of any other controlled device (see Figure 5).
2. Controlled devices (MP-52XX) with unfiltered and unregulated power supplies must be filtered. CP-8102 will provide filtering for a maximum of two MP-52XX by connecting the two red leads together at the controller's +20 terminal (see Figure 6).
3. Controlled devices with filtered and unregulated supplies: Up to six controlled devices with the red leads (+20 terminals) can be connected together. Number of units paralleled depends on the current (mADC) requirements of the controller or adaptor.

Table 4. Controlled Device Power Supply Characteristics

Filtered & Regulated	Filtered & Unregulated	Unfiltered & Unregulated
CC-8101 CC-8102 CC-8103 CC-8111 Series CC-8118 Series CC-8218 Series CP-8161 Series CP-8301 Series* CP-8425 Series CP-8501 Series CP-8502 Series	MP-54XX MS-8XXX Actuators	MP-52XX Actuators

* Except CP-8301-101 which does not have a power supply.

FIELD CHECKOUT

Units are factory calibrated and tested and should not require field checkout. If required, proceed as follows (see Figure 1):

NOTE

The following procedures can be used for either reverse or direct acting connected CP-8102 controllers.

1. Initial Conditions for CP-8102
   A. Jumper between AB2 and AB3 disconnected.
   B. 20 Vdc +1 - 1.5 Vdc (23 mA) applied to the +20 and common terminals. This power is normally supplied by the controlled device.
2. Connect a 20,000 ohm/volt DC VOM meter between the OP1 (+) terminal and COM (-) terminal of the CP-8102. Use a 20 Vdc or less range.
3. Disconnect the temperature sensing element "A" from the ISA terminals of the CP-8102. Short ISA terminals together and VOM reading should be 1 Vdc or less if bridge "A" is direct acting and more than 15 Vdc if bridge A is reverse acting.
4. Open ISA terminals and VOM reading should be greater than 15 Vdc if bridge "A" is direct acting and less than 1 Vdc if bridge "A" is reverse acting.
5. The CP-8102 is a good unit if it passes tests in steps 3 and 4. Replace the unit if tests 3 and 4 are not met.

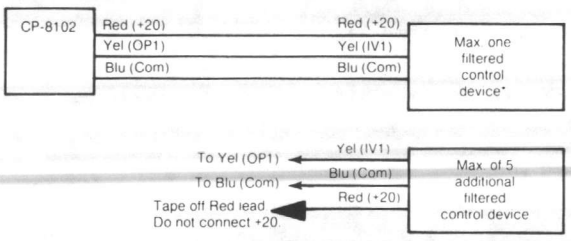

Figure 5. Controlled Devices All Filtered

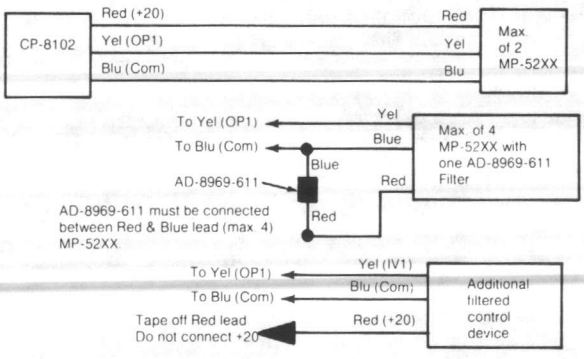

Figure 6. At Least One of the Controlled Devices in MP-52XX (Unfiltered)

FIELD CALIBRATION PROCEDURES FOR CONTROLLERS WITH ONE AND TWO INPUTS

(See Figures 7 and 9):

The following procedures can be used for either reverse or direct acting connected CP-8102 controllers.

The CP-8102 is factory calibrated and shipped with both inputs connected for direct acting output.

Normally, the CP-8102 (connected for either direct or reverse acting) requires no field calibration but if a field calibration check or recalibration becomes necessary, then proceed as follows:

1. Initial Conditions for CP-8102:
   - A. Setpoint "A" set for: 70°F.
   - B. Setpoint "B" set for: 70°F.
   - C. Ratio adjustment set for: 1:1.
   - D. Throttling range adjustment set for: 3°F.
   - E. Jumper between AB2 and AB3 disconnected.
   - F. 20 Vdc (23 mA) applied to the +20 and common terminals. This power is normally supplied by the controlled device.
2. Connect a 20,000 ohm/volt DC VOM meter between the OP1 (+) terminal and COM (-) terminal of the CP-8102. Use a 20 Vdc or less range.
3. Calibration of "A" input. Use one of the following two methods.
   - A. Temperature measurement methods:

     Accurately measure the temperature at the temperature sensing element "A". Adjust setpoint "A" until the dial reading agrees with the temperature measured. Rotate setpoint "A" calibration potentiometer (located just to the right of setpoint "A" dial) until a VOM reading of 7.5±.2 Vdc is obtained.
   - B. Sensing element substitution method:

     Disconnect the temperature sensing element "A" from the ISA terminals of the CP-8102. Reconnect a 1000 ohm ±.1% wire wound resistor (TOOL-203) to the ISA terminals. Adjust setpoint "A" for 70°F. Rotate setpoint "A" calibration potentiometer (located just to the right of setpoint "A" dial) until a VOM reading of 7.5±.2 Vdc is obtained.

NOTE

Method B above does not calibrate out any errors due to sensing element tolerances or wire lead resistance.

4. Calibration of "A" input complete.

   If "B" input is not being used (jumper between AB2 and AB3 removed) then proceed to step 7 below.
5. Reconnect jumper between AB2 and AB3.
6. Calibration of "B" input. Use one of the following two methods.
   - A. Temperature measurement method:

     Accurately measure the temperature at the temperature sensing element "B". Adjust setpoint "B" until the dial reading agrees with the temperature measured. Rotate setpoint "B" calibration potentiometer (located just to the right of setpoint "B" dial) until a VOM reading of 7.5±.2 Vdc is obtained.
   - B. Sensing element substitution method:

     Disconnect the temperature sensing element "B" from ISB terminals of the CP-8102. Reconnect a 1000 ohm ±.1%, wire wound resistor (TOOL-203) to the ISB terminals. Adjust setpoint "B" for 70°F. Rotate setpoint "B" calibration potentiometer (located just to the right of setpoint "A" dial) unti a VOM reading of 7.5±.2 Vdc is obtained.

NOTE

Method B above does not calibrate out any errors due to sensing element tolerances or wire lead resistance.

7. CP-8102 calibration is complete. Remove all test meters, test resistor, etc. Reconnect all elements, place setpoints, throttling range and ratio adjustments as required for the application.

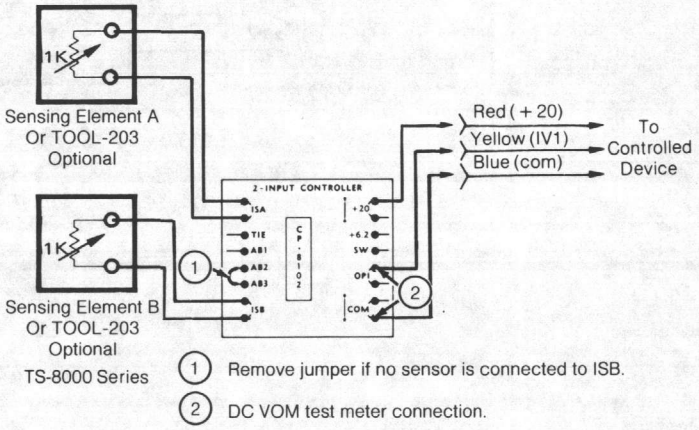

Figure 7. One or Two sensor Application

FIELD SERVICE

Units are factory calibrated and tested for direct acting control (D.A.) and reverse reset (R.R.) and should not require service. If required, proceed as follows (see Figure 8):

Power Supply

Apply +20; +1, −1.5 Vdc (23 mA) to the +20 and common terminals. Proper power supply is always required for unit to function properly. The +6.2 (±.3) Vdc should be available from the controller, if required.

Test

Connect a 20,000 ohm/volt DC VOM meter between +20 and common terminals. Controller power supply +20, +1 −1.5 Vdc (indicated by M1 in Figure 8) should be measured. Power supply is normally supplied by controlled device. Check +6.2 (±.3) Vdc power supply of controller with VOM.

Service

If the +20 Vdc level is not measured, service the (lead) controlled device, power supply or installation wiring as necessary to insure proper power supply.

Controller Output

See Field Calibration Procedures, on this page, for calibration of "A" setpoint using sensor element substitutes.

Test

With signal output measured between OP1 and COM at 7.5 ± .2 Vdc, rotate setpoint "A" dial several degrees (in increments of 1°F) each way from 70° setting to vary the M2 reading from 1 to 15 Vdc. The number of degrees that setpoint dial "A" is changed to vary the reading on M2 3 Vdc should be approximately 3°F (if T.R. is set at 5°F, 3 Vdc will change over 5°F).

Service

See Field Calibration Procedures, on page 5, for calibration of "B" setpoint using sensor element substitutes. (Make certain that jumper is connected to AB2 and AB3.)

Adjusting setpoint "B" several degrees from 70°F setting will cause the M2 reading to vary from 1 to 15 Vdc.

If output voltage cannot be made to vary over a 1 to 15 Vdc range, then replace the CP-8102 as defective.

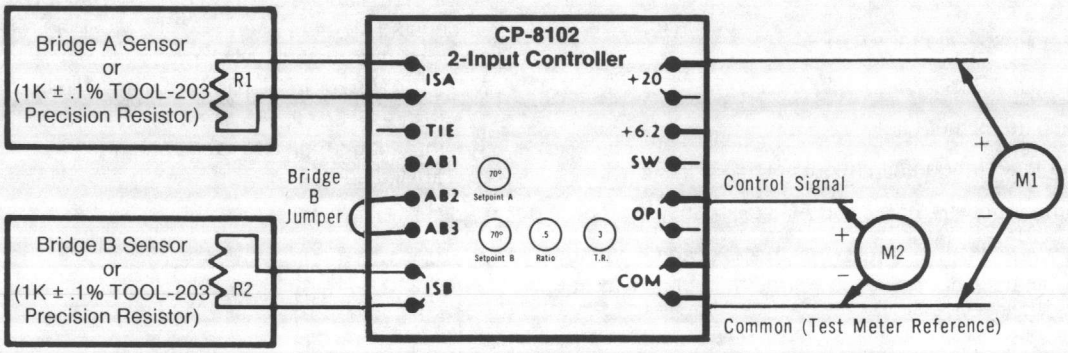

Figure 8.

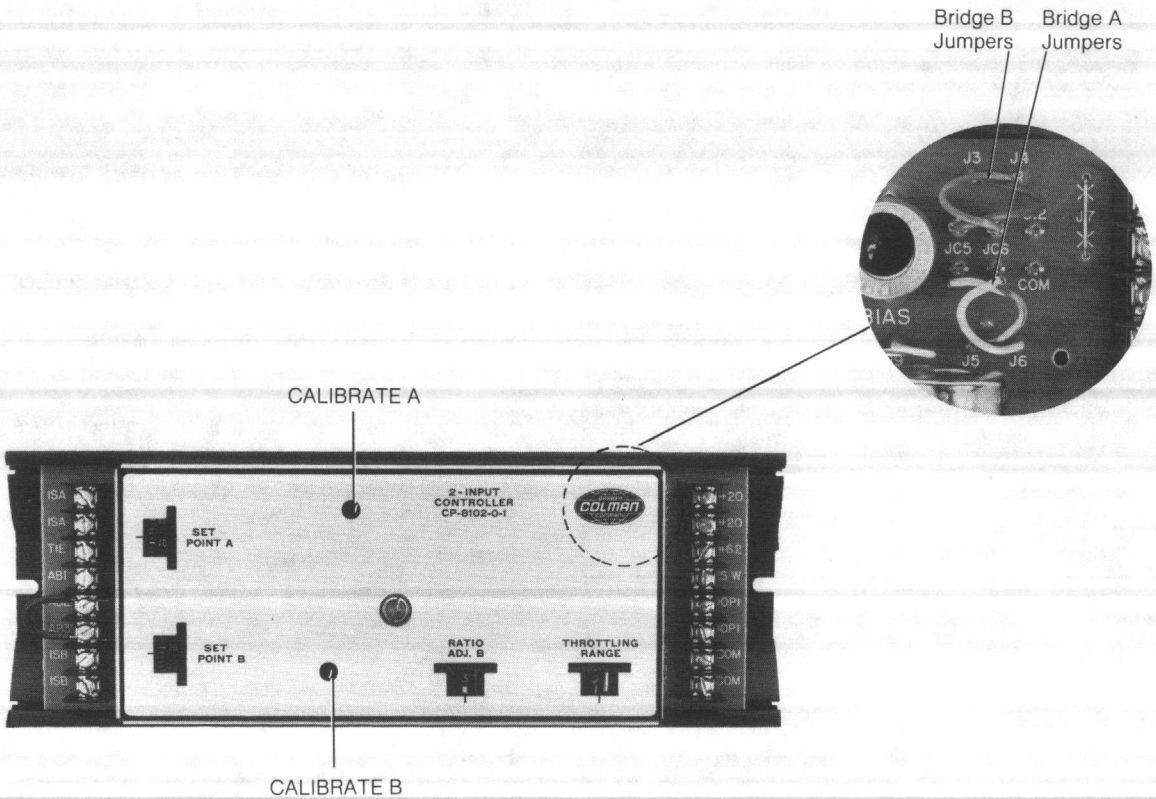

Figure 9.

MAINTENANCE

This is a quality product. Regular maintenance of the total system is recommended to assure sustained optimum performance.

TYPICAL APPLICATIONS

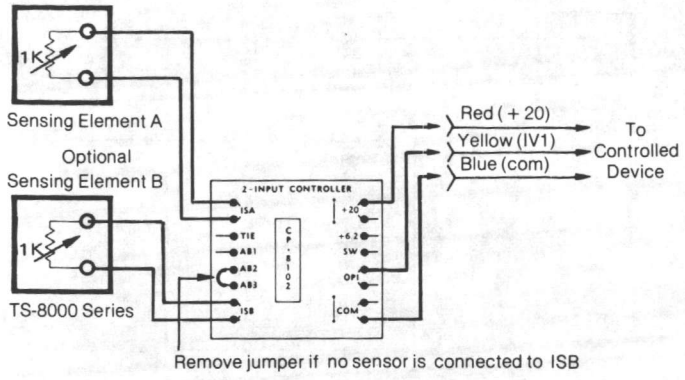

Figure 10. One or Two Temperature Sensor Application

Hot water reset is typical application for a two sensor application of the CP-8102. For example, perimeter radiation temperature, with hot water as a heating medium, is increased as the temperature of the outside air decreases. This method of control is known as reverse reset. A reset schedule shown below in table requires the hot water temperature to increase from 100° to 170°F, a change of 60°F, as the outside air temperature decreases from 60° to 0°F. If the throttling range of the CP-8102 controller is 10°F the setting of the CP-8102 will be as follows:

Setpoint "A": 110°
Setpoint "B": 60°
Ratio Adjustment: 1 (change in outside air temperature/ change in hot water temperature)
Throttling Range: 10°F
Note: Controller function is Direct Acting * (see table 2)
* Factory setting

Table 5. Reset Schedule

Outside Air Temp. (°F)	Water Temperature (°F)
60	110
0	170

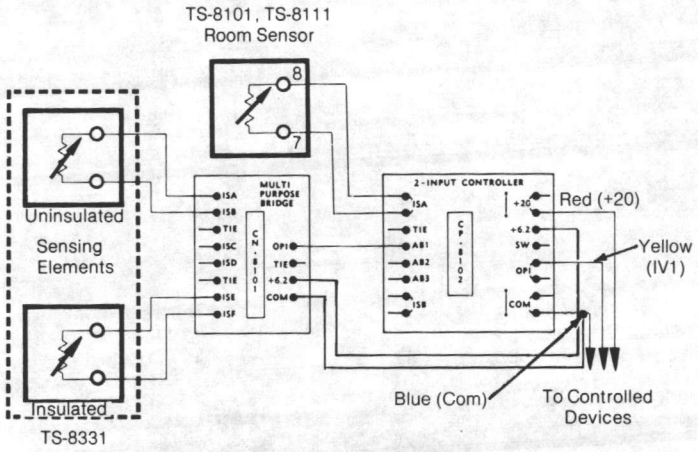

Figure 11. Derivative (Lagged) Sensor

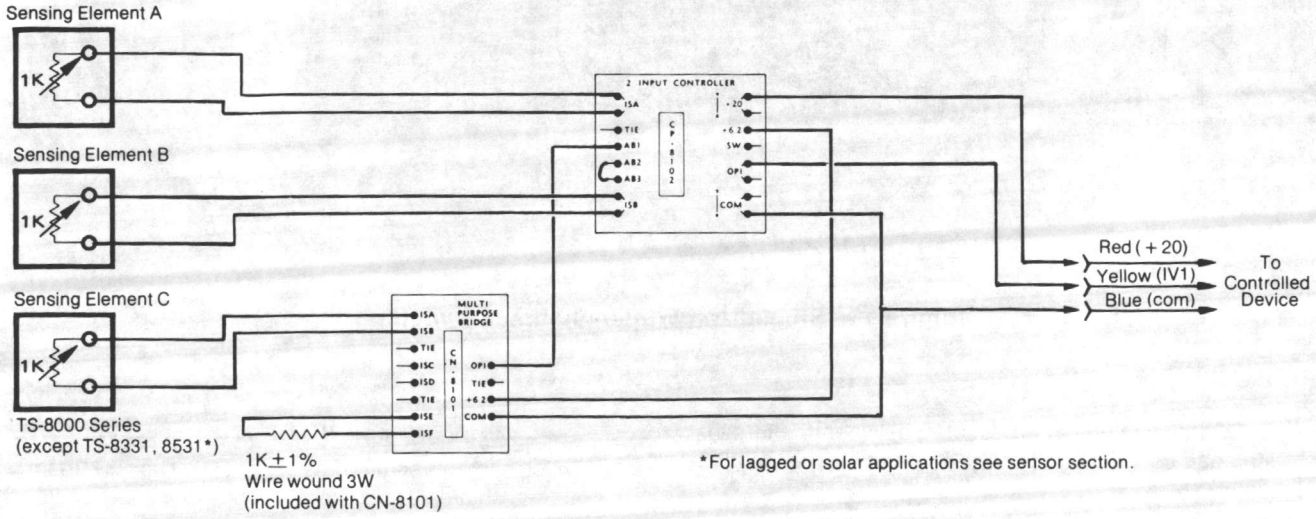

Figure 12. Three Temperature Sensor Application*

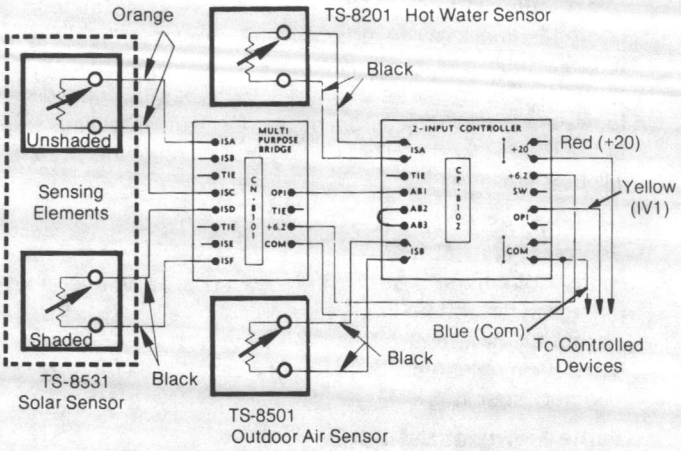

Figure 13. Solar and Outdoor Air Reset of Hot Water (Direct Acting Output)

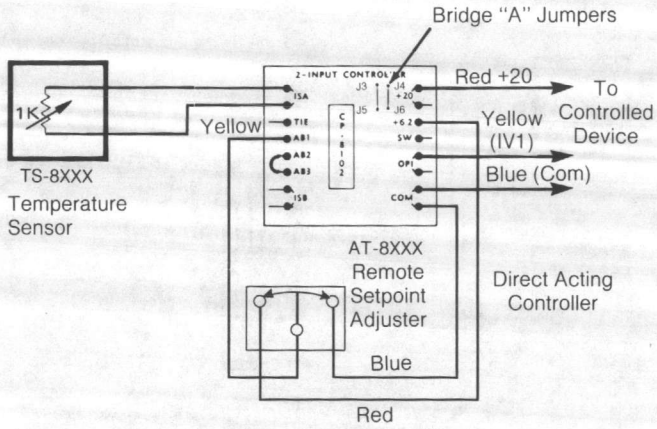

NOTE: If the controller bridge is reverse acting, the red and blue wires at the AT-8XXX Series must be reversed (red to common, blue to +6.2).

Figure 14. Single Input with Remote Setpoint

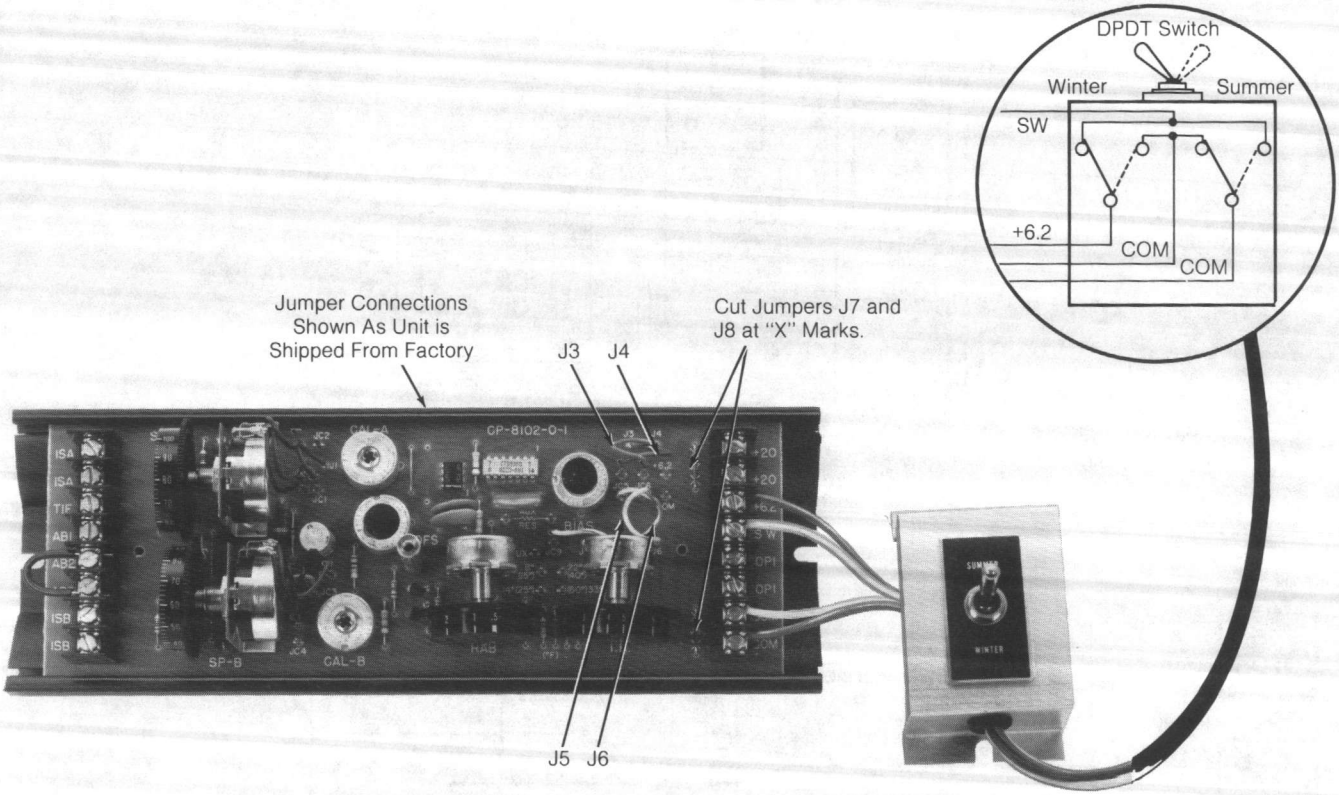

Figure 15. Single Unit Winter-Summer Switching

1. Cut both jumpers that are located between the terminal strip and cover on the left hand side of the device. (See Figure 15).
2. Connect D.P.D.T. Switch (CYZP-11 or equivalent) according to Figure 15.

NOTE

Switch contacts should have pilot duty ratings and maintain a 1 ohm or less contact rating over its normal life.

3. No recalibration of CP-8102 is required.

SINGLE UNIT SUMMER/WINTER SWITCHING (Continued):

Table 6. Bridge Connections for Summer/Winter (See Figure 15.)

BRIDGE "A" (MAIN SENSOR)		BRIDGE "B" (RESET SENSOR)		RESET OF SETPOINT "A"		JUMPER TO PIN CONNECTIONS			
						J3	J4	J5	J6
Winter	Summer	Winter	Summer	Winter	Summer				
D.A.	R.A.	D.A.		Reverse	Direct	JC5	JC6	COM	+6.2
R.A.	D.A.	D.A.		Direct	Reverse	JC6	JC5	COM	+6.2
D.A.	R.A.	R.A.		Direct	Reverse	JC5	JC6	+6.2	COM
R.A.	D.A.	R.A.		Reverse	Direct	JC6	JC5	+6.2	COM
D.A.		D.A.	R.A.	Reverse	Direct	COM	+6.2	JC5	JC6
R.A.		D.A.	R.A.	Direct	Reverse	+6.2	COM	JC5	JC6
D.A.		R.A.	D.A.	Direct	Reverse	COM	+6.2	JC6	JC5
R.A.		R.A.	D.A.	Reverse	Direct	+6.2	COM	JC6	JC5

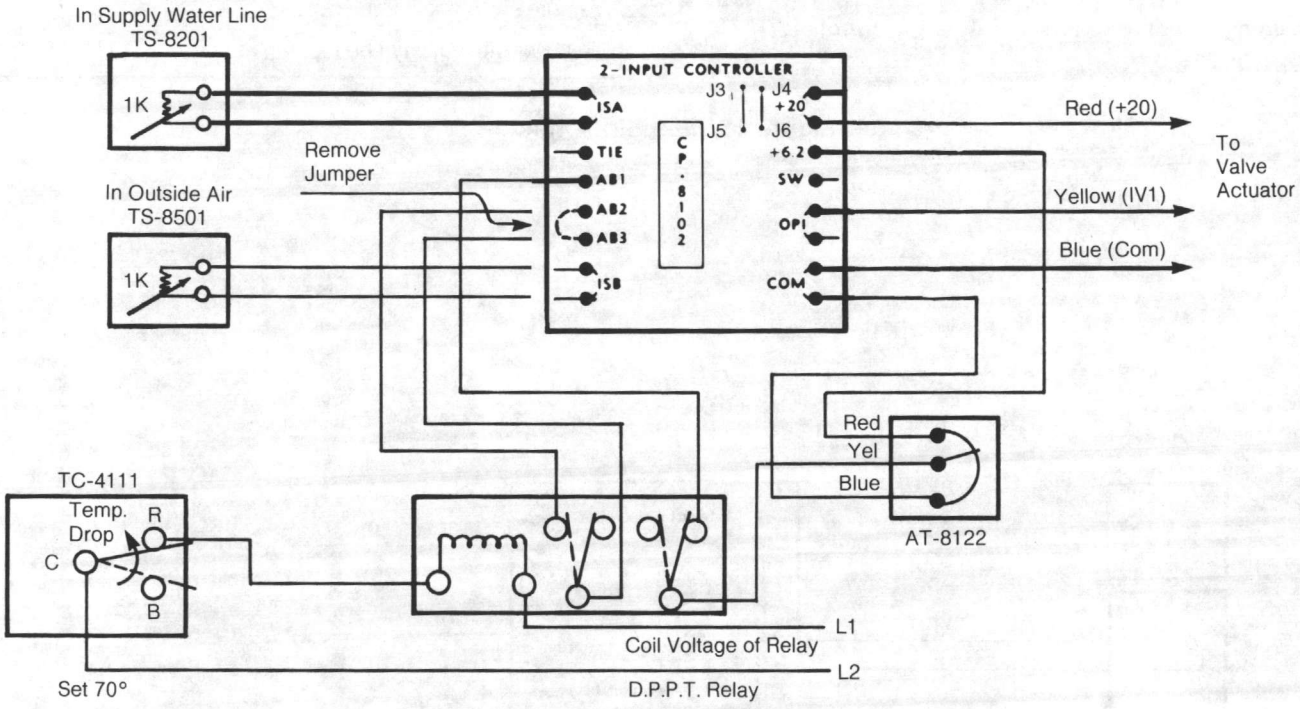

Table 7. Typical Reset Schedule

Outside Air Temp. (°F)	Water Temperature(°F)
70°	110°
0°	140°
Above 70°	85°

Outside air temperature reset of supply water temperature with fixed temperature of 85°F with outside air temperature of 70°F.

Setpoint "A": 110°F

Setpoint "B": 70°F

Ratio Adjustment: 2.33

Throttling Range: 10°F

AT-8122: Set 45°F for S.P. of 85 where O.A. is above 70°F. Relay is energized with outside air temperature below 70°.

Figure 15. Outside Air Temperature Reset of Hot Water with Fixed Temperature with Outside Air Temperature Above Selected Value

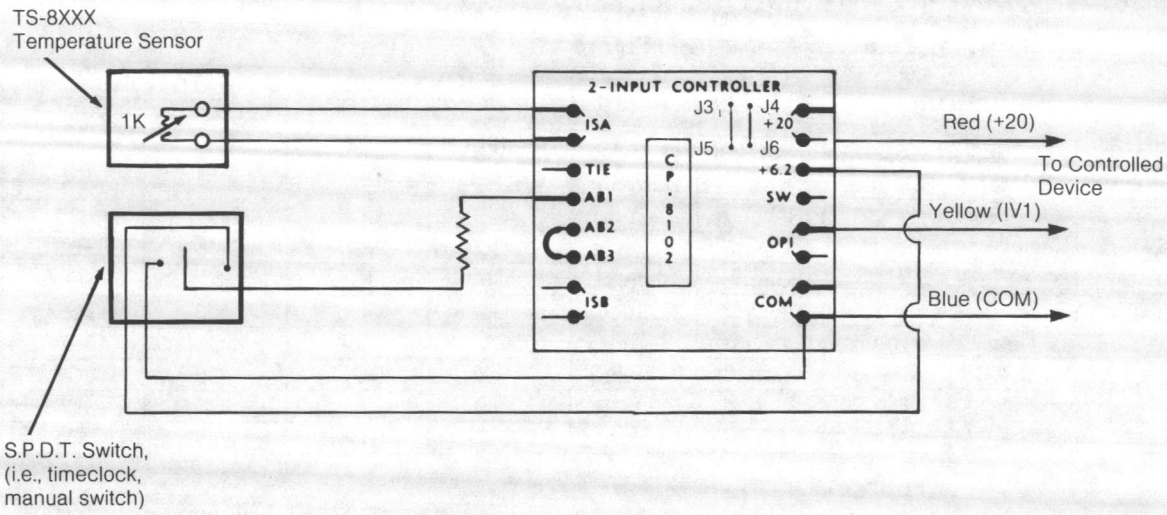

Resistor (5, 10, 15, 20°F offset) use AD-8969-201 kit.

Offsetting setpoint for Direct Acting Controller:

Raise, connector resistor to +6.2 terminal.

Lower, connect resistor to COM terminal.

Offsetting setpoint for Reverse Acting Controller:

Raise, connect resistor to COM terminal.

Lower, connect resistor to +6.2 terminal.

NOTE

Standard two conductor twisted wire should be used if remote switching is employed.

Resistor must always be located at stat.

Figure 16. Setpoint Offset

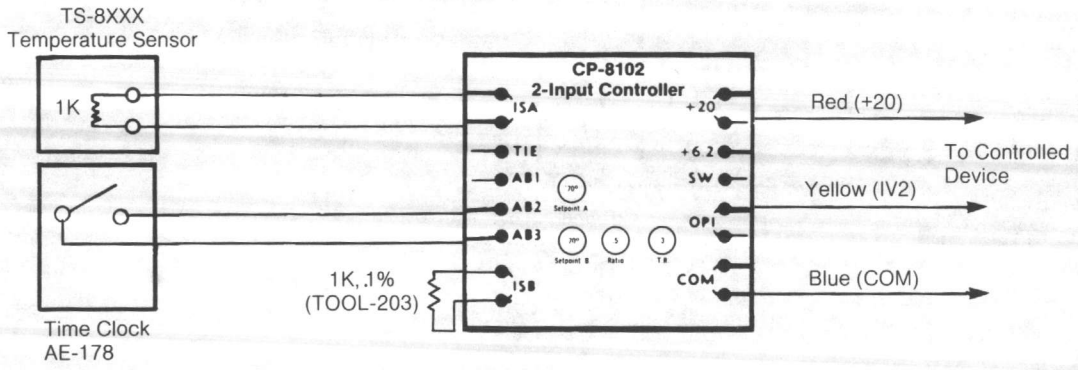

Install 1000 ohm 1% (TOOL-203) resistor in ISB. Install AE-178 7 day time clock. Set setpoint "B" as desired for night setback.

Table 8.

Setpoint "B"	Night Setback
70°F (21.1°C)	No Setback
65°F (18.3°C)	5°F (2.8°C) Setback
60°F (15.6°C)	10°F (5.6°C)Setback
55°F (12.8°C)	15°F (8.3°C) Setback

Figure 17. Night Setback

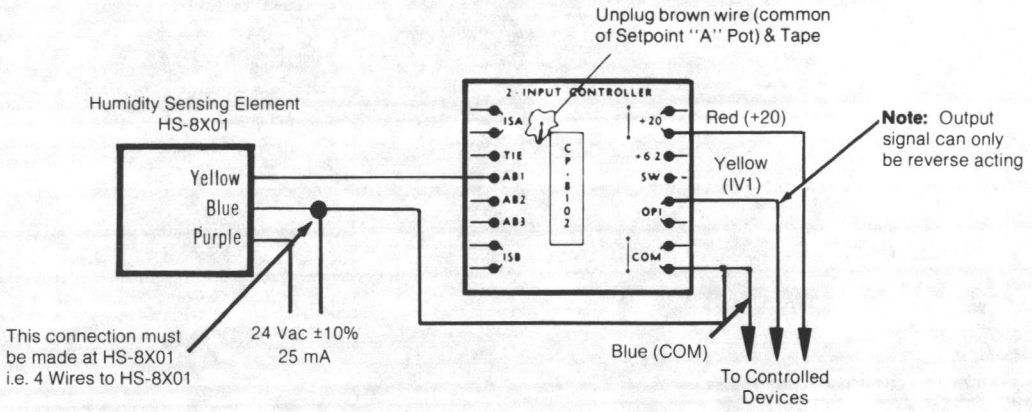

Note: Settings of 2-6 throttling range result in 2-6% RH throttling range for 3 Vdc output change. 6 TR is maximum setting.

Figure 18. Humidity Control

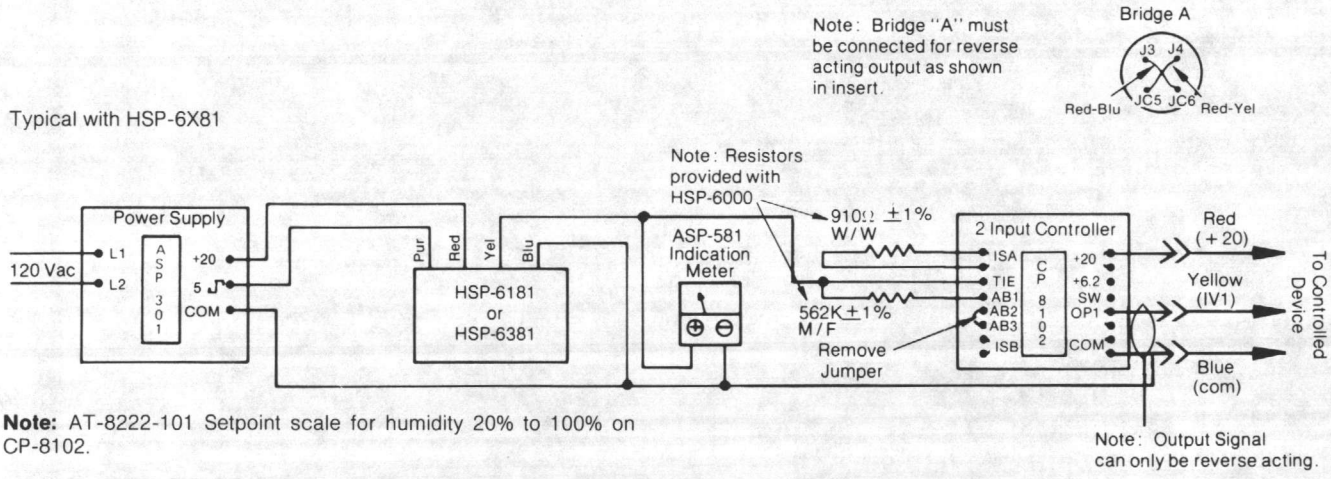

Note: AT-8222-101 Setpoint scale for humidity 20% to 100% on CP-8102.

Figure 19. Humidity Control & Indication

Barber-Colman Company
ENVIRONMENTAL CONTROLS DIVISION

1354 Clifford Avenue
P.O. Box 2940
Loves Park, IL U.S.A. 61132-2940

General Instructions

PC-301
Differential Pressure Switch

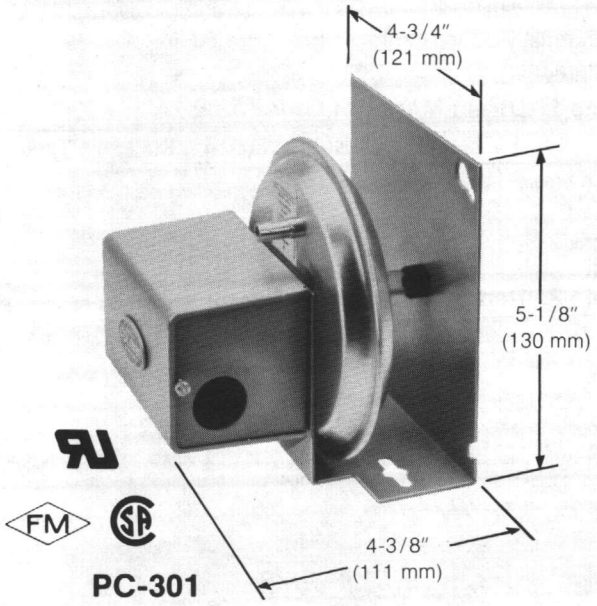

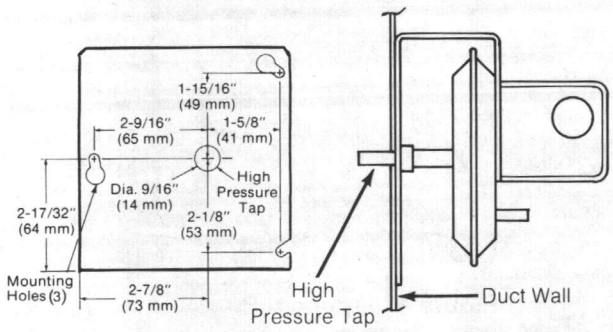

Figure 1. Direct Mounting of Probe

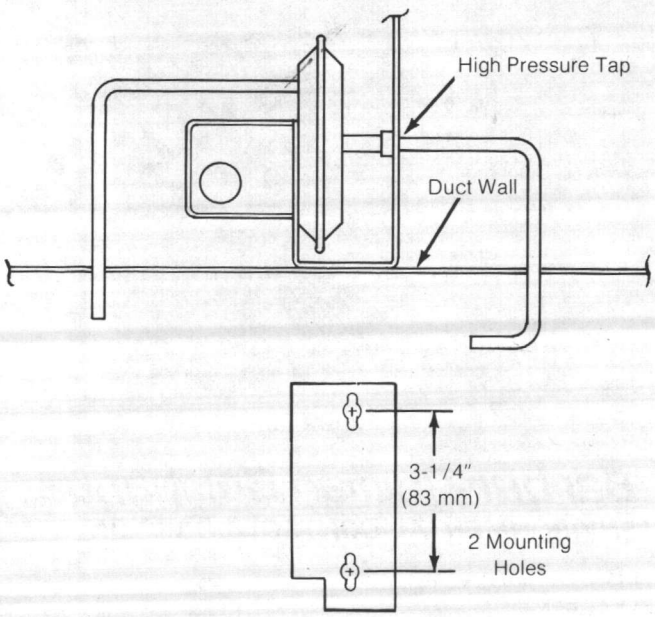

Figure 2. Remote Mounting of Probes

For low or line voltage control of static, velocity or total pressures, or differential static or total pressures of air and non-combustible gases only.

All metal construction with 1/2" conduit opening. SPDT snap action switch. Coded screw terminals.

PERFORMANCE

Maximum Safe Pressure: 12" W.C.

Setpoint: Field adjustable .05 to 1" W.C.

Differential: .04" W.C. at minimum setpoint to .1" W.C. at maximum setpoint.

Temperature Range: Ambient 35° to 140°F (0° to 60°C). Shipping -20° to 140°F (-29° to 60°C).

Mounting: Diaphragm must be mounted in a vertical plane.

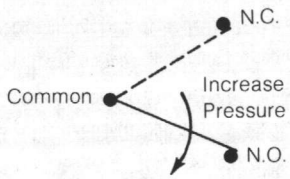

N.O. makes on increase of pressure

Switch Rating

Vac	Full Load Amps	Locked Rotor Amps	Pilot Duty (VA)	Non-Inductive Amps
24V	—	—	60	—
120V	6.25	37.5	300	—
240V	3.1	18.6	300	—
277V	2.7	16.2	300	10

OPTIONS None

ACCESSORIES

AP-301 Static probe for turbulent air
AP-305 Static probe for low actuating pressure
AT-208 Duct mounting kit for remote probes other than AP-301 or AP-305

INSTALLATION

CAUTION

For use with air or non-combustible gases only.

1. Select direct or remote mounting. For field mounting use mounting bracket as a template. For factory mounting use dimensions provided. See Figures 1 and 2.
2. Select appropriate probes from Tables 1 and 2.

PROBES

Probes can be constructed from 1/4" O.D. copper, brass, or aluminum tubing. The ends of the probes should be cut square to the sides of the tube and deburred. Total pressure probe must have the sensing end bent at 90°, approximately 1 to 3 inches (25 mm to 76 mm), from the tip. Use AT-208 kit to mount probe to duct.

Use AP-301 static probe in areas with air turbulence caused by filters, dampers, etc. Not included.

Use AP-305 static probe where there is very low actuating pressure.

3. Install probe. See Figure 3. Sampling probes should be located in areas of minimum air turbulence (6 to 8 duct diameters downstream from fan outlet, elbows, tees, or dampers). If this is not possible locate the probe tip as close to the center of the duct as possible.
4. Mount the PC-301. Note: The diaphragm must be mounted in a vertical plane and in a location free from vibration.
5. Connect the remote probe(s), if any, to the PC-301.
6. Make all connections in accordance with job wiring diagrams and in compliance with national and local codes. On an increase of air pressure to above setpoint, common contact of switch is made to normally open contact. On a decrease of air pressure to below setpoint, common contact of switch is made to normally closed contact.

Adjustment

To increase setpoint, turn adjustment screw clockwise. Adjustable .05 inch ±.02 inch to 1.0 inch W.C. (1.25 mm ±.5 mm to 25 mm W.C.). To decrease setpoint, turn adjustment screw counterclockwise. Note: Units are shipped at minimum setpoint.

If readjustment to minimum setpoint is required, proceed as follows without any air pressure applied to diaphragm.

1. Turn adjustment screw full CCW.
2. Push on spring at point A (Figure 5) and maintain pressure during steps 3 and 4.
3. Turn adjustment screw CW until common contact is made to normally open contact.
4. Turn adjustment screw CCW until common is made to normally closed contact. Then turn adjustment screw 1/8 turn more CCW.

Table 1. Direct Mount of One Probe

	Static	Velocity	Total	Δ Static	Δ Total
High Press. Tap*	Probe 1	Probe 2	Probe 2	Probe 1	Probe 2
Low Press. Tap	—	Probe 3 Remote	—	Probe 3 Remote	Probe 4 Remote

Table 2. Remote Mounting of Probe(s)

	Static	Velocity†	Total	Δ Static	Δ Total
High Press. Tap*	Probe 3	Probe 4	Probe 4	Probe 3	Probe 4
Low Press. Tap	—	Probe 3	—	Probe 3	Probe 4

*Highest (absolute) pressure should be applied to high pressure tap.
†Pitot can be used instead of two probes.
Δ = Differential.

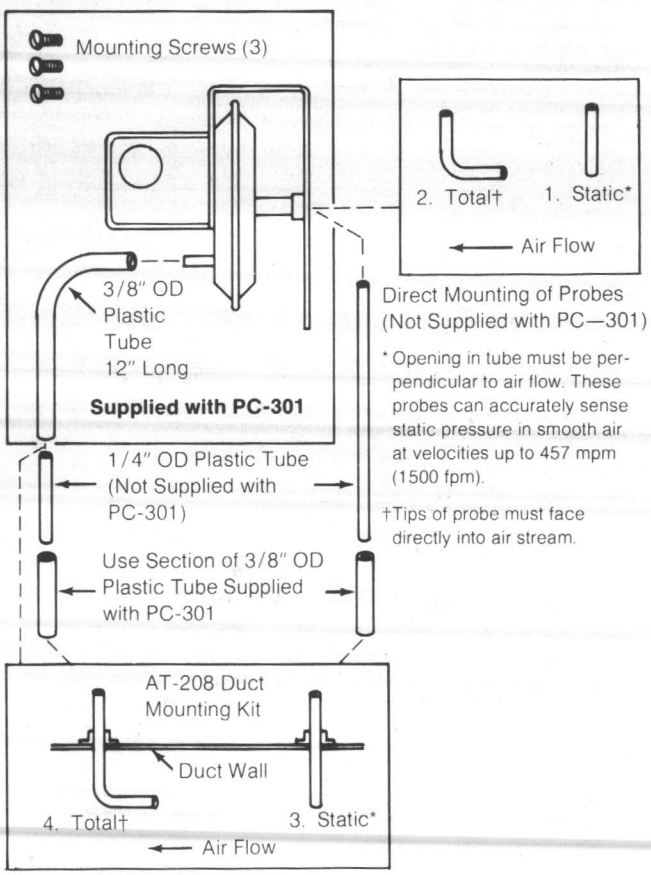

Remote Mounting of Probes. Use AT-208 to Mount Probe to Duct.

(Above Items Not Supplied. Order AT-208 Separately.)

Figure 3.

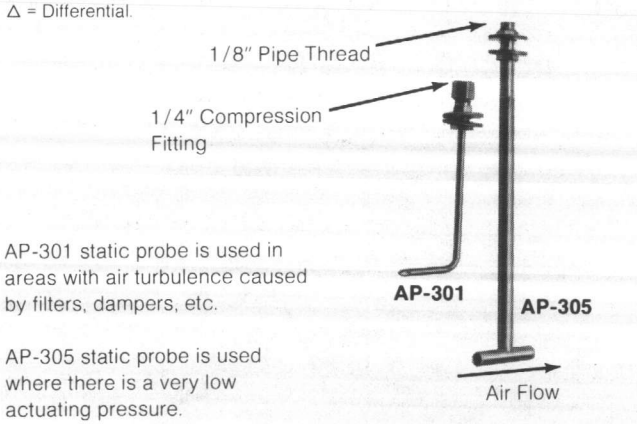

Figure 4. Optional Probes

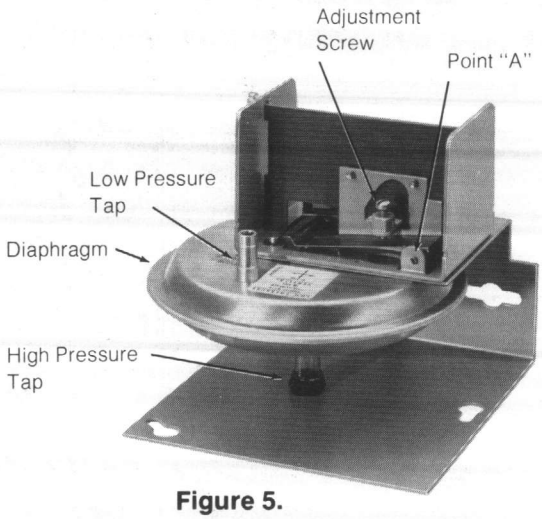

Figure 5.

Barber-Colman Company
ENVIRONMENTAL CONTROLS DIVISION

1354 Clifford Avenue
P.O. Box 2940
Loves Park, IL U.S.A. 61132-2940

LITHO IN U.S.A.

General Instructions

TK-1700
Day/Night & Heating/Cooling Pneumatic Dual Setpoint Room Thermostats

Meets National, State and Local Energy Conservation Standards

For proportional temperature control of pneumatic actuated valves and damper actuators to maintain room air temperatures in heating, ventilating and air conditioning systems.

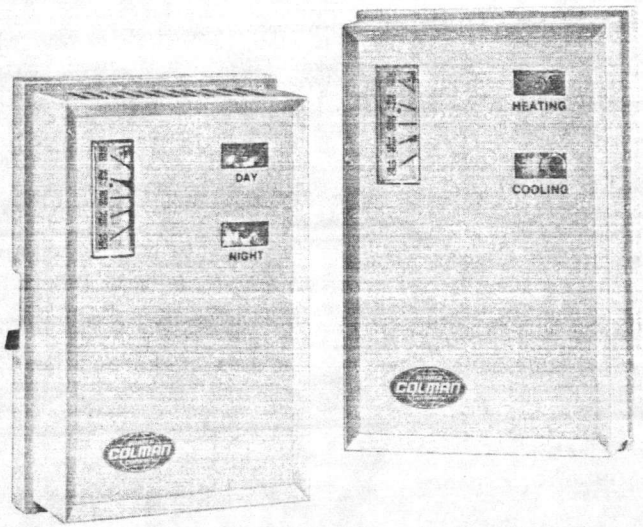

CONSTRUCTION

Two-tube proportional control type of pneumatic instrument, using bimetal sensing. The small sensitive bimetal actuates a piloted non-bleed relay. Delicate balance and linear output are accomplished by an internal pneumatic feedback circuit. Connection to fittings is made by connecting plug-in plastic tubing which is attached to the base of the thermostat.

Throttling Range: Continuously adjustable from 2 to 10°F for a 10 psi change in control branch line pressure, nominally 3 to 13 psi. Normal factory setting 4°F. Independently adjustable for each setpoint dial.

Supply Air Pressure: See SPECIFICATION TABLE. Requires 15 and 22 psig dual pressure supply main.

Maximum Safe Air Pressure: 30 psig.

Ambient Limits: 20 to 115°F working; -40 to 150°F shipping.

Dial Markings: °F standard; dials field-reversible for °C.

Air Connections: 5/32 plastic tubing.

External Setpoint Knobs: AT-37 kit included in standard and TK-17XX-400 models.

Internal Thermometer: Included in TK-17XX-400 and -404 models.

OPTIONS

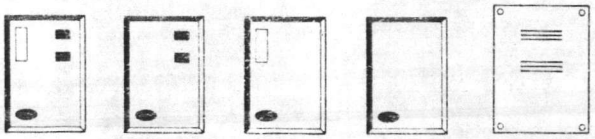

Standard **-400** **-403** **-404** **-600 Aspirated Models (Requires AT-503)**

Part Numbers	Air Consumption for Sizing Air Compressor	Air Capacity for Sizing Air Mains
All except Aspirated	.008 scfm	96 scim
Aspirated	.024 scfm	136 scim

ACCESSORIES

AT-37	Setpoint knob kit (included with standard and TK-17XX-400 models)
AT-504	Plaster hole cover
AT-505	Surface mounting base
AT-506	Pneumatic wall box fitting
AT-509	Wall box required for aspirated thermostats
AT-536	Pneumatic wall thermostat conversion kit
AT-546	Auxiliary mounting base
AT-1103	Wire guard
AT-1104	Cast aluminum guard
AT-1105	Plastic guard
AT-1155	Plastic guard
AT-1165	Plastic guard
AT-533-101	Adapter 1/4" plastic to 5/32" plastic
AT-533-127	Adapter 3/16" copper or 1/4" copper with 1/4" solder coupling (not included) to 5/32" plastic

Typical Piping

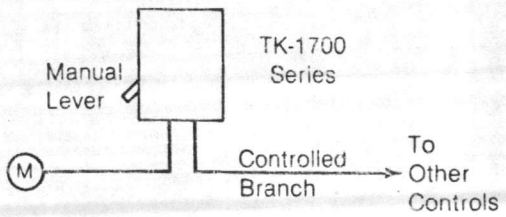

Figure 1.

General Instructions

TA 3432, TA 3441
TC 3411, TC 3413
Duct and Immersion
Electric Thermostats

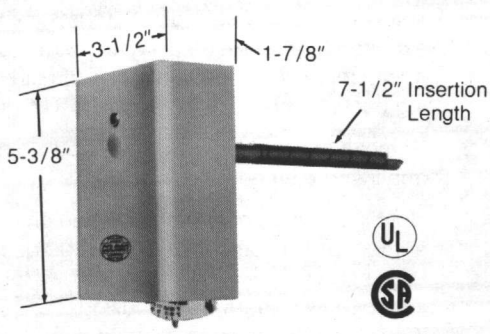

These thermostats are used for two position (ON-OFF) control of solenoid valves, damper and valve actuators, relays, etc.

PRE-INSTALLATION

The thermostats are shipped with two mounting screws. TC-3413 and TA-3434 are shipped with bracket and three screws. Before installation, make a visual inspection of the thermostat carton for obvious signs of damage.

Part No.	Device Type	Control Dial Range†	Differential	Switch Type	Voltage	Full Load Amps	Locked Rotor Amps	Pilot Duty (VA)
TA-3432	High Limit Manual Reset	75-135°F (24-57°C)	Fixed* 5°F	SPST	120 240	16 8	96 48	720
TA-3433	High Limit Manual Reset	100-160°F (38-71°C)	Fixed* 5°F	SPST	120 240	16 8	96 48	720
TA-3434	High Limit Manual Reset	120-240°F (49-116°C)	Fixed* 5°F	SPST	120 240	16 8	96 48	720
TA-3441	Low Limit Manual Reset	35-60°F (2-16°C)	Fixed** 5°F	SPST	120 240	16 8	96 48	720
TC-3411	Low Limit Automatic Reset	0-120°F (18-49°C)	2-8°F Factory Set 2°F	SPDT	120 240	3.8 1.9	22.8 11.4	125
TC-3413	High Limit Automatic Reset	120-240°F (49-116°C)	2-8°F Factory Set 2°F	SPDT	120 240	3.8 1.9	22.8 11.4	125

*Reset cannot be accomplished until the sensed temperature is at least 5°F below the setpoint.
**Reset cannot be accomplished until the sensed temperature is at least 5°F above the setpoint.
†Dial dual marked in °F and °C.

INSTALLATION

Requirements

Mounting: The thermostats may be mounted in any position on any surface not subject to excessive vibration or extreme ambient temperatures (100°F above or below the scale range). The sensitive helical bimetal element may be mounted in ducts or, with optional bulb well, in liquid lines, pipes, tanks, etc.

Procedure

DUCT THERMOSTAT INSTALLATION:

1. Cut a 3/4-inch diameter hole in the duct where the thermostat is to be located.
2. Remove the cover and carefully insert the bimetal in the duct opening. Mark position for the two mounting screws provided and punch or drill holes.
3. Partially insert screws.
4. Insert the bimetal element, swinging the thermostat housing to the left to engage screw heads in key hole slots. Straighten thermostat housing and tighten mounting screws securely.
5. Make electrical connections and replace thermostat cover.

DUCT INSTALLATION WITH EXTENSION MOUNTING BRACKET:

1. This bracket is required by U/L on units where the control range exceeds 180°F (typically TC-3413, TA-3434).
2. Cut a 3/4-inch diameter hole in the duct where the thermostat is to be located.
3. Mount the extension bracket to the duct. Mark position for three mounting screws provided and punch or drill holes. Tighten screws.
4. Partially insert the two 8-32 × 3/8-inch round head screws provided.
5. Insert the bimetal element, swinging the thermostat housing to the left to engage screw heads in key hole slots. Straighten thermostat housing and tighten mounting screws securely.
6. Make electrical connections and replace thermostat cover.

IMMERSION THERMOSTAT INSTALLATION:

1. The optional bulb well AT-223 positions the thermostat mechanism housing 2 inches away from pipe or tank wall to allow for insulation.
2. Insert the bulb well in pipe line or tank where it will be exposed to a representative temperature of the medium being controlled. The bulb well is furnished with a mounting bushing threaded for standard 3/4-inch pipe fittings.
3. Remove cover, use care when handling bimetal element, and insert element in bulb well.
4. Note that cutout of mounting flange on bulb well must be at the top. This cutout allows clearance for scale setting lock screw. Insert mounting screws provided through keyhole slot in thermostat housing to engage corresponding holes in bulb well mounting flange. Align thermostat and tighten mounting screws securely.
5. Make electrical connections and replace thermostat cover.

Wiring: Terminals are located under thermostat cover. Knockouts for 1/2-inch conduit connectors at top of case. Make all electrical connections to thermostat in accordance with the installation wiring diagram for the job.

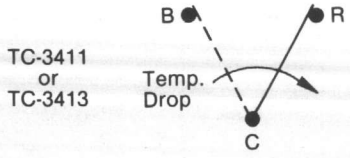

TA-3432, TA-3433 and TA-3434 open circuit on rise of temperature above setpoint.

TA-3441 opens circuit on drop of temperature below setpoint.

RUN/ADJUST

Adjustment: The lever setting determines the operating point of the thermostat. The lever can be locked in place by tightening the dial setting lock screw to prevent unauthorized tampering or resetting of thermostat control point.

Differential: To increase the differential, bend the switch actuating cam up, using a narrow screwdriver. A 1/32-inch upward bend at the left end of the cam increases the differential approximately 2°F.

CHECKOUT

While media temperature is in the scale range of unit, determine the media temperature, then move the scale slider above and below the media setting and verify internal switch action using a VOM.

SERVICE AND REPAIR

Calibration: The thermostats are factory calibrated and should not require further attention. However, if for any reason a thermostat requires calibration, proceed as follows:

1. Set the temperature lever to correspond to actual temperature of medium being controlled. Use an accurate thermometer and allow both thermometer and thermostat to settle out for approximately ten minutes.
2. Turn off power to thermostat and then remove thermostat cover.
3. Insert a narrow blade screwdriver from upper left-hand corner and turn calibrating screw clockwise to lower control point temperature, and counterclockwise to raise control point temperature. Turn the calibrating screw either to the right or to the left (clockwise or counterclockwise) as required until the switch clicks.
4. Rotate the calibrating screw in the opposite direction until the switch clicks again.
5. Set calibrating screw halfway between point where switch clicks (one full turn of calibrating screw represents approximately 10°F).
6. Re-install all electrical connections and replace thermostat cover.

Maintenance: No special maintenance is required. However, the exterior of the unit should be free from foreign material.

Repair: Field repair of the thermostat is not recommended. If the system is not operating correctly and the reason is traced to the thermostat, it should be replaced.

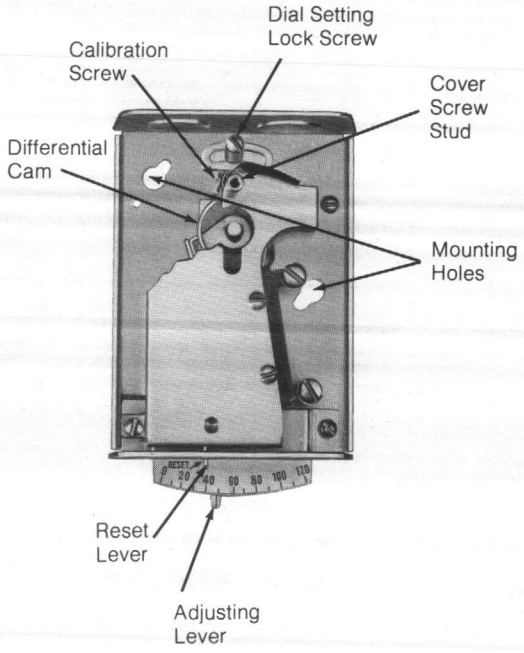

Barber-Colman Company
ENVIRONMENTAL CONTROLS DIVISION

1354 Clifford Avenue
P.O. Box 2940
Loves Park, IL U.S.A. 61132-2940

General Instructions

TA-1101, TA-1102
Two Position
Electric Room Thermostat

For on-off control of unit heater motors, electrical heaters, high input motor starter coils.

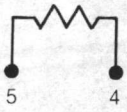

Night Depression Resistor
(Certain Models)

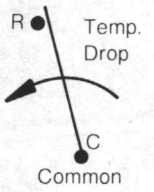

R makes on
temp. drop

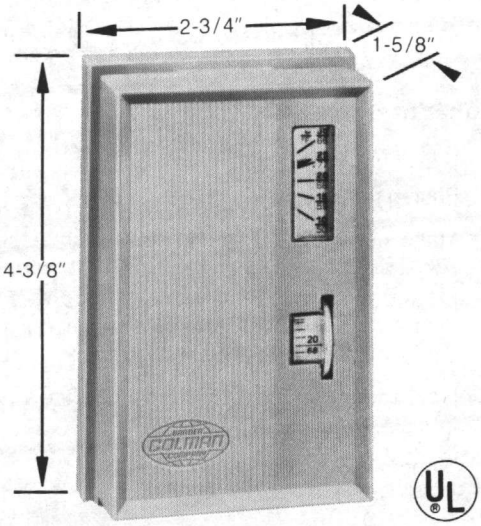

Part No.	Control* Dial Range	Full Load Amps		Locked Rotor Amps		Non-Inductive Amps			Pilot Duty VA
		24/120 Vac	240 Vac	24/120 Vac	240 Vac	120 Vac	240 Vac	277 Vac	
TA-1101	55-85°F (13-29°C)	7.2	3.6	43.2	21.6	7.5	7.5	7.0	68 @ 24 Vac
TA-1102	45-75°F (7-23°C)								340 @ 120/240 Vac

*Units marked in both °F and °C, dial stop pins included to limit control range.

Bimetal operated snap action SPST switch with heavy duty contacts. Coded screw terminals. Differential 2°F maximum. Units have plastic covers as standard. Mounts on flush or surface switch box.

Dimensions: 4-3/8" high × 2-3/4" wide × 1-5/8" deep.

ACCESSORIES

AT-101 Lock cover kit
AT-104 Dial stop pins (NOTE: pins included with each unit)
AT-136 Title plates (day, night, heat, cool)
AT-504 Plaster hole cover kit (small)
AT-505 Surface mounting base
AT-546 Auxiliary mounting plate
AT-602 Selector switch sub-base DP4T
AT-603 Selector switch sub-base one DP4T, one DPDT
AT-1103 Wire guard
AT-1104 Cast aluminum guard
AT-1105 Plastic guard
AT-1155 Plastic guard
AT-1165 Plastic guard
Tool 11 Calibration wrench
Tool 13 Contact burnishing tool

OPTIONS

Add "dash-number" (-XXX) suffix to base part number for desired option.

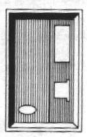
Standard

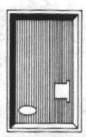
-400

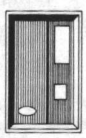
-401

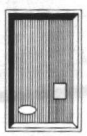
-402

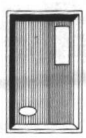
-403

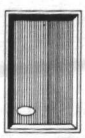
-404

—601 10°F night depression 120V Standard Cover†
—602 10°F night depression 24V Standard Cover†
—603 10°F night depression 240V Standard Cover†

†Normally, night depression is controlled by a centrally located time clock such as AE-174 or AE-178, or by selector switch sub-bases (AT-602 or AT-603).

INSTALLATION

Requirements

Locate thermostat where it will be exposed to unrestricted circulation of air which represents the average temperature of the controlled space. Do not locate the thermostat near sources of heat or cold, such as lamps, motors, sunlight or concealed ducts or pipes. The thermostat is designed for service in any normally encountered human environment.

Procedure

1. Pull all wires. (Use copper wire only.)
2. Fasten mounting plate to box or wall.
3. Make electrical connections to thermostat screw type terminals. Make all connections in accordance with the job wiring diagram and in compliance with national and local electrical codes. Class I wiring is required unless all circuits to contacts are powered from a Class II source.
4. Hook thermostat on top of mounting plate and swing down into place.
5. Tighten thermostat mounting screw.

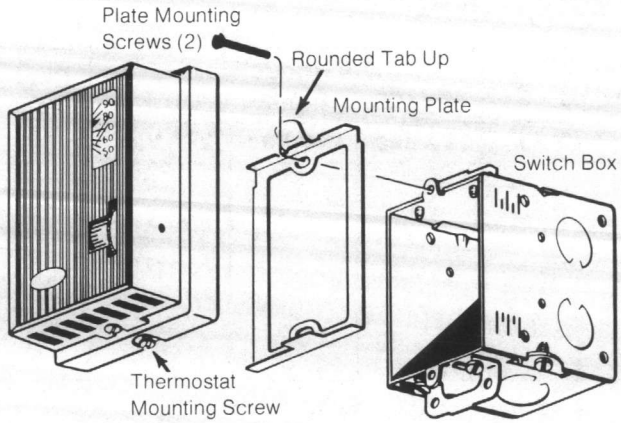

CHECKOUT

After installing a thermostat, make an initial check of the switching action. Verify the switch action by listening to and watching the switch contacts, using a voltmeter between the proper sides of the switch, or observing the controlled device.

1. Run the setpoint dial to a temperature above ambient. This should cause the thermostat to switch, calling for heat.
2. Turn the setpoint dial setting down gradually. The switch should break contact.

Calibration

All thermostats are calibrated at the factory and normally will not require any such attention. However, if recalibration is necessary for any reason, proceed as follows:

1. Disconnect power to thermostat.
2. Set the adjusting dial to correspond to actual room temperature.
3. Remove thermostat cover, remove screw that secures right-hand side of insulator, fold back insulator and remove contact cover. (See Figure 1.)

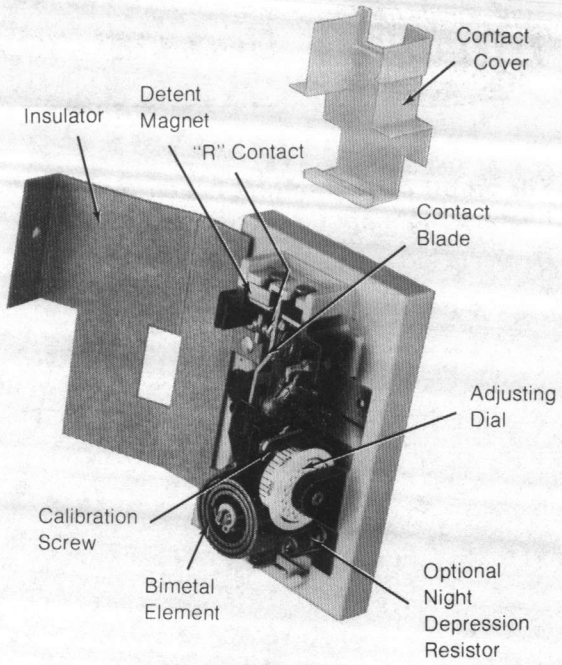

Figure 1

Do not breathe on the thermostat or handle excessively as this will affect the accuracy of the final calibration.

4. If contact blade is made to the left (R) contact, use a 3/16-inch open end wrench to turn calibration screw counterclockwise (looking at head of screw) until blade just breaks contact. Note: Each complete revolution of screw changes calibration approximately 8°F. Thermostat is now properly calibrated.
5. If contact is **not** made to the left, turn the calibration screw slowly clockwise until element makes to the R contact. Then turn screw very slowly counterclockwise until blade just breaks contact. Thermostat is now properly calibrated.
6. Replace contact cover insulator and thermostat cover.
7. Restore power to thermostat.
8. Recheck calibration about 30 minutes later to be sure heat from handling did not result in erroneous setting.

MAINTENANCE

Open areas at bottom and around base of thermostat should be kept clean and free from obstructions to allow proper flow of air. If switch contacts need cleaning, this may be done with a TOOL-13 contact burnishing tool.

REPAIR

Field repair of the thermostat is not recommended. If the system is not operating correctly and the reason is traced to the thermostat, it should be replaced.

Barber-Colman Company
ENVIRONMENTAL CONTROLS DIVISION

1354 Clifford Avenue
P.O. Box 2940
Loves Park, IL U.S.A. 61132-2940

General Instructions

Strap-On-Thermostat
TC-2974

DEVICE INFORMATION

Identification

These thermostats are used to either open or close electrical circuits when the temperature of a pipe exceeds the thermostat setting. The orn-red circuit is often used on the unit heater installations to prevent operation of the fan unless heat is actually available. The orn-brn circuit is usually used for control on hot water boilers.

Pre-Installation

The thermostats are shipped with a metal strap and spring, which will fit supply lines up to 4-inch O.D. For dimensions see Figure 1.

Before installing the thermostat, look for bent or broken parts.

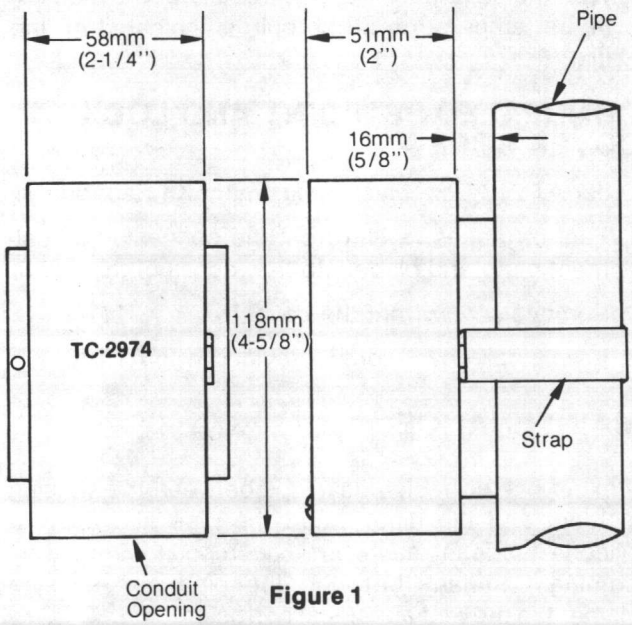

Figure 1

Scale* °C (°F)	Differential °C (°F)	SPDT Switch Ratings (ac Only)			
		Voltage (Vac)	FLA (amps)	LRA (amps)	Pilot Duty (VA)
10-99	Fixed 5.5	120	9.8	58.8	360
(50-210)	(Fixed 10)	240	8	48	360

*The scale is dual marked in degrees C and degrees F.

INSTALLATION

Requirements

The thermostat can be mounted in any position on a smooth clean pipe. Be sure pipe is free of rust, scale or insulation material.

Ambient Rating: –40 to 60°C (–40 to 140°F).

Procedure

1. Insert the spring loops into the holes provided in the strap and in the side of the housing.
2. Wrap the strap around the pipe and thread through the opening provided in the housing.
3. Push the device against the pipe to compress the foam spacer until the bulb is 6 mm (1/4-inch) from the back of the housing.
4. Pull the strap tight and bend to lock the device in place.
5. Clip off or bend back the excess strap.

Wiring: The thermostat has one 13mm (1/2)–19mm (3/4-inch) conduit opening in bottom of housing. Make all electrical connections in accordance with the job wiring diagram and in compliance with national and local electrical codes. Device terminal coding, switch action, and wiring is shown in typical application (Figures 2 and 3).

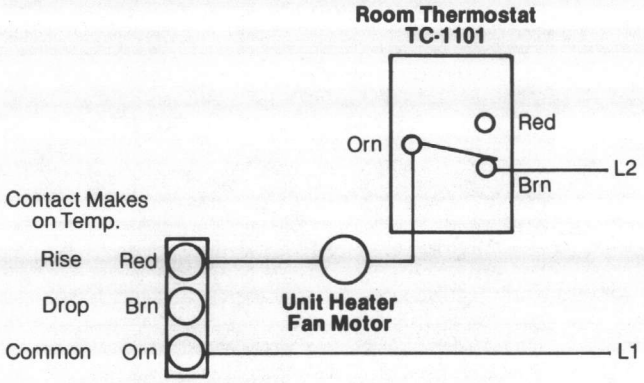

Typical unit heater application wiring for strap-on thermostat TC-2974. Unit heater fan runs only when heating supply media is above the setpoint of TC-2974.

Figure 2

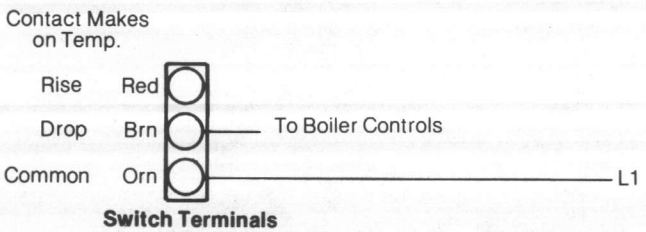

Typical hot water boiler application wiring for strap-on thermostat TC-2974. Boiler runs only when water temperature is below the setpoint of TC-2974.

Figure 3

CHECKOUT

After installing the thermostat, proceed as follows:

1. With electrical power on and hot water flowing through the pipe, rotate the setpoint dial from minimum to maximum and check fan operation. If wired orange and red, the fan will start at minimum dial setting and stop at maximum dial setting. The reverse will occur if wired orange to brown.

2. If no electrical power is available, contact closure may be checked with an ohmmeter.

3. The differential is factory set to provide the following switch action:

   a. At 5°F above the setpoint an orn-red circuit is made.

   b. At 5°F below the setpoint an orn-brn circuit is made.

RUN/ADJUST

Setpoint

Screwdriver adjustment. Scales dual marked °F on front and °C on back. To change scale, remove spring retaining ring, select scale and replace retaining ring.

Refer to **CHECKOUT** for manual operation.

CALIBRATION

1. Disconnect power to thermostat.

2. Soak the bulb for 10 minutes at a known temperature.

3. Turn the dial until the thermostat clicks, reverse the dial until it clicks again.

4. Turn the dial midway between the click points.

5. Turn the calibration nut (located under the dial) until the temperature of the bulb is indicated on the dial.

CONCEALED SETPOINT AND LOCK COVER SCREW

Order AT-210 Concealed Adjustment Kit Separately.

1. Peel off adhesive film from the concealed adjustment plate and place into the recess of the cover.
2. Remove screw from the cover.
3. Install lock cover screw provided with AT-210.

MAINTENANCE

If excessive corrosion develops between the sensing element and the pipe, clean the pipe and apply a silicone lubricant such as #6 compound from Dow Corning Company between the pipe and sensing element to prevent additional corrosion.

REPAIR

Field repair of the thermostat is not recommended. If the system is not operating correctly and the reason is traced to the thermostat, it should be replaced.

Barber-Colman Company
ENVIRONMENTAL CONTROLS DIVISION

1354 Clifford Avenue
P.O. Box 2940
Loves Park, IL U.S.A. 61132-2940

LITHO IN U.S.A.

General Instructions

Thermostats
Low Temperature
TC-5131
TC-5141

DEVICE INFORMATION

For low or line voltage low limit control of temperature in ducts.

Metal case with 1/2" conduit opening. Vapor pressure type thermal element controls snap action SPDT switch. 20' × .094" OD copper element. Thermostat responds to lowest temperature sensed by any one foot section of its element. Coded screw terminals. Differential fixed at 5°F. Ambient at case must be 5°F above setpoint to a maximum of 150°F.

Dimensions: Case, 2-1/2" high × 3-1/8" wide × 2-3/16" deep.

OPTIONS

TC-5131-201 includes 4-1/2' 208/240 Vac power cord.

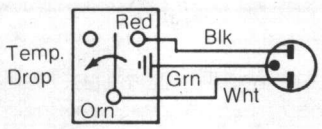

TC-5131-201 or TC-5141-201

ACCESSORIES

None

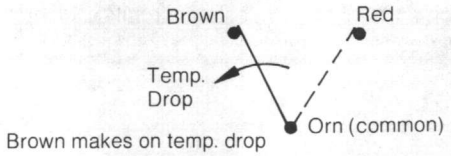

TC-5131 or TC-5141

Dimensions in Inches

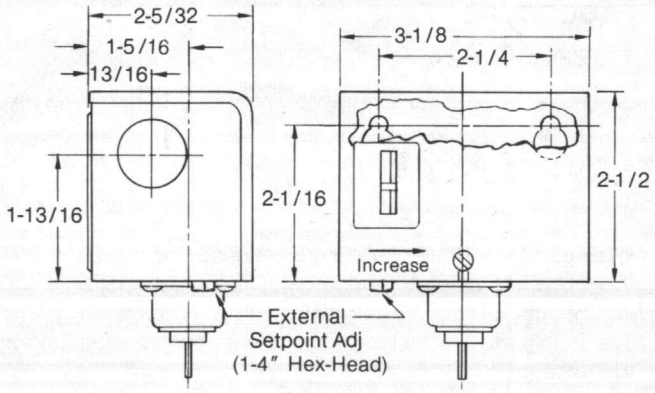

Case can be mounted in any position

Figure 1

PERFORMANCE

Part Number	Device Type	Control Dial Range*	Voltage Vac	Full Load Amps	Locked Rotor Amps	Pilot Duty (VA)	Non-Inductive Amps
TC-5131	Low temp. auto reset	34-60°F (1.1-16°C)	24	—	—	100	16
			120	13.8	82.8	650	16
			208	9.6	57.6	750	9.6
TC-5141	Low temp. manual reset**	34-60°F (1.1-16°C)	240	8.3	49.8	750	8.3
			277	—	—	—	7.2

*Units dual marked °F and °C.

**Reset cannot be accomplished until the sensed temperature is at least 5°F above setpoint.

INSTALLATION

REQUIREMENTS

Install all but a few inches of the thermal element securely in the controlled media for maximum sensing capability and minimum vibration damage. Usual location of the thermal element is on the downstream side of the coil. The element should be serpentined in a horizontal pattern so that it will be exposed to all areas where low temperatures are possible. (See Figure 2.) Capillary hardware is not included.

Note: Do not kink capillary.

Ambient at case must be at least 5°F above setpoint to a maximum of 150°F. Maximum safe bulb temperature is 300°F.

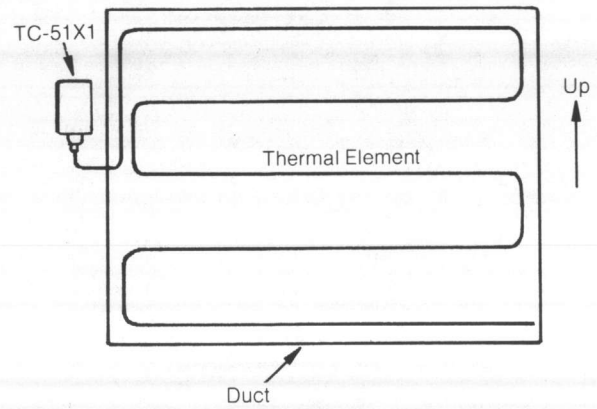

Figure 2

PROCEDURE

1. Remove the cover.
2. Mount case (Figure 2) with two screws (#10 max) in screw slots in back of case (screws not included).
3. Make wiring connections to switch terminals.
4. Replace the cover.

Wiring: Make all electrical connections in accordance with the job wiring diagram and in compliance with national and local electrical codes. Thermostat's case has an opening for a 1/2-inch conduit. The units include a green ground attached to the case.

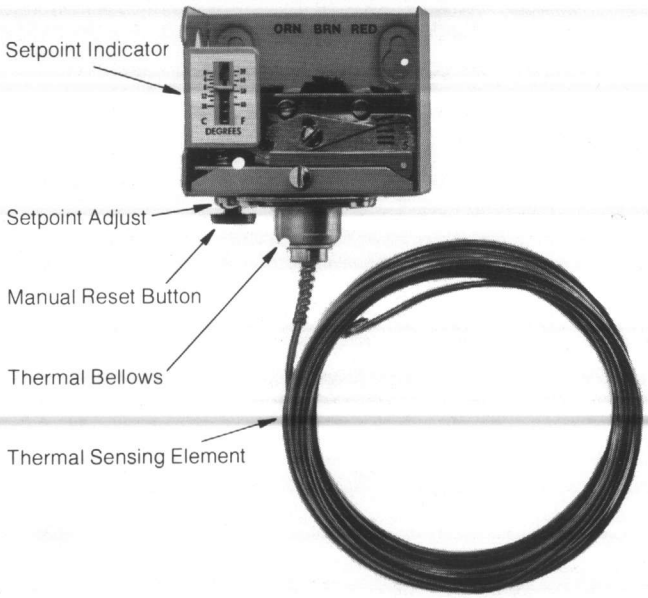

Switch Action (SPDT):

1. On a temperature rise, "orange" (common) makes to "red".
2. On a temperature drop "orange" (common) makes to "brown".
3. See Figure 3 for typical wiring.

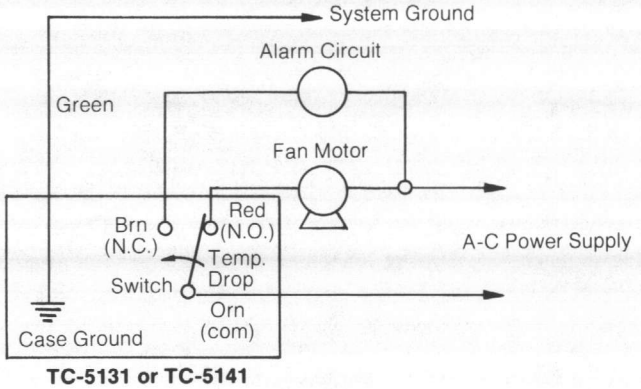

Figure 3

Temperature Setting: Turn setpoint adjustment screw (1/4" hex head) located in bottom of case until indicating pointer is at desired temperature.

CAUTION

Unit includes mechanical stop to prevent adjustment below 34°F. Do not attempt to set below 34°F as this may damage the device.

CHECKOUT

The reset button on TC-5141 will restore circuits if the element temperature exceeds the scale setting by at least 5°F.

RUN/ADJUST

All thermostats are precision calibrated at the factory and normally will not require any further attention.

REPAIR

Field repair of the thermostat is not recommended. If the system is not operating correctly and the reason is traced to the thermostat, it should be replaced.

Barber-Colman Company
ENVIRONMENTAL CONTROLS DIVISION

1354 Clifford Avenue
P.O. Box 2940
Loves Park, IL U.S.A. 61132-2940

General Instructions

Pneumatic Receiver-Controller RKS-1001, 2001, 3002, 4002

General Information: These receiver-controllers are used in conjunction with Barber-Colman transmitters for proportional control of valves and actuators. Depending on the transmitter, they may be used to control temperature, humidity and duct pressures. May be used as single controller, master-submaster or either of above with remote reset of set point.

Construction: A proportional control relay type pneumatic instrument which accepts a 3 to 15 psig signal, and controls using a small portion of the input signal. The unit, depending on model, will accept from 1 to 3 input signals. The stable balanced lever system produces a linear output signal to the actuator based on the value of the input signals.

The units are all capable of being changed in the field from direct to reverse-acting. This action is referenced to the number 1 input signal. The direction of reset effect on the dual input units is reverse only and not field changeable.

The set point of the unit is of a vernier type. The adjustment knob is located under the cover. On units with a remote set point input, the set point may be either adjusted at the instrument or remotely. The remote set point adjuster is ordered separately and not part of the receiver controller.

Supply Air Pressure: 18 psig nominal, 30 psig maximum.

Proportional Band: Adjustable from 2-1/2% to 40% of Input No. 1 transmitter span; i.e., 200F° transmitter span, 5F° = 2-1/2%, 80F° = 40%. At 2-1/2% proportioning band, 5F° will produce a 10 psig change in output pressure (nominally 3–13 psig).

Ambient Temperatures: 150F maximum, 40F minimum.

Authority: On dual input units adjustable from 10 to 200%, 100% authority means that both transmitters have the same authority if they have the same span. 1 psi change at Input No. 1 is balanced by 1 psi change at Input No. 2.

Air Consumption: For sizing air compressors, average air consumption is 0.008 scfm (standard cubic feet per minute). Add 0.024 scfm for each transmitter connected to the receiver-controller. A dual input unit with remote set point would be (.008 + .024 + .024 + .024) = .08 scfm.

Air Capacity: For sizing air mains, receiver-controller air requirement is 16 scim (standard cubic inches per minute). Add 36 scim for each transmitter connected to the receiver-controller (such as a dual input and remote set point adjuster). A receiver-controller with two transmitters and one remote set point adjustor connected would have a total of 124 scim (16 + 36 + 36 + 36).

Air Connections: 1/8" FNPT. Spacing designed to accept 1-1/2" dia. back connected gauges for direct mounting.

Table 1
AVAILABLE RECEIVER CONTROLLER MODELS

Model		Remote SPA	Action*	Authority‡	Proportional Band‡
Single Input	RKS 1001	None	DA	None	2-1/2% to 40% of Primary Transmitter Span.
	RKS 2001	±10% of Primary Transmitter Span	DA		
Dual Input	RKS 3002	None	DA	10% to 200% of Primary Transmitter Span. Adjustable.	
	RKS 4002	±10% of Primary Transmitter Span	DA		

***DA (direct-acting):** Increases output pressure on rise in Input No. 1 pressure. Field changeable to RA. **RA (reverse-acting):** Decreases output pressure on rise in Input No. 1 pressure.

‡Primary transmitter connects to Input No. 1.

INSTALLATION AND MOUNTING

Mount unit in upright position on wall, panel, etc. using the three holes provided. Do not mount on a surface subject to vibration.

Front 1/8" FNPT connections (4) on manifold are spaced to allow installation of 1-1/2" gauges. Connections on top are provided for connection to system piping.

Refer to Figure 1 for location of port connections and table for features of individual units.

Port B - Branch, connected to controlled device.
M - Main, supply air pressure of 18 psig.
2 - Input No. 2, Input from secondary transmitter.
1 - Input No. 1, primary transmitter input.
A - Remote set point adjuster input.

ADJUSTMENTS

Changing From Direct to Reverse-Action (referenced to Input No. 1).

The action (direct or reverse) of the unit must be correct for the application before calibration is attempted. Standard factory assembly is for direct-acting (DA).

When the units are received on the job-site, they may be field converted for reverse-action (RA) as follows:

1. Cut the pilot tube with end cutter on 45° angle as close to the DA pilot tube connection as possible. See Figure 2, for tube location.

2. Remove plug from RA pilot tube connection and tape it to inside of cover. Insert pilot tube into RA tube connection.

3. With 3/16" wrench, turn RA screw in (CW) until contact is made with lever "B". See Figure 2A. With a 3/16" wrench, back DA screw out (CCW) approximately 4 turns. See Figure 3.

If it should be necessary to return the receiver-controller to the direct-acting mode, proceed as follows:

1. Remove the pilot tube from the RA pilot tube connection.

2. Insert plug in to vacated hole.

3. Assemble eyelet EYRF-292 to pilot tube. Remove any tube and eyelet that may be on DA pilot tube connections. Force tube over the DA pilot tube connection.

4. Using pliers, push EYRF-292 eyelet in place to secure pilot tube to DA pilot tube connection.

5. With 3/16" wrench, turn DA screw in (CW) until contact is made with lever "B". With 3/16" wrench, turn RA screw out (CCW) approximately 4 turns.

Attachment of AT 539: To attach the AT 539 external pilot pressure kit, use the following procedure:

1. Remove Receiver Controller restriction cover plate, restriction, and two gaskets (see Figure 2 for location).

2. Replace items in Step 1 with parts in AT 539 kit.

3. Route 5/32" plastic tubing between main and No. 2 input bosses and connect to constant 18 psig main.

4. With pliers break off protrusion on cover that normally fits between the main and No. 2 input bosses.

5. NOTE: When using the AT-539 the restrictions for the transmitters must be removed and the PNC-42 blocking gasket installed. The transmitters then require a remote restrictor.

6. Place cover on receiver-controller.

Percent Proportional Band Adjustment

See Figure 4 for location of adjustment of percent proportional band.

Percent proportional band is a value which is a percentage of the primary transmitter span (Input No. 1) which will produce a 3-13 psig (10 psi change) output in branch line pressure. This setting must be calculated and set prior to calibration of the receiver-controller set point. If changes in proportional band setting are required for stable control, recalibration of the receiver-controller is required.

The formula for converting throttling range to proportional band setting is:

$$\text{Proportional Band Setting} = \frac{\text{Throttling Range}}{\text{Transmitter Span}} \times 100$$

Typical Conversions are:

	Transmitter Span	THROTTLING RANGE			
		50F °F	200F °F	80% RH % RH	2" H_2O "H_2O
PROP. BAND SETTING	2.5	1.25	5	2	.05
	5	2.5	10	4	.1
	10	5	20	8	.2
	15	7.5	30	12	.3
	20	10	40	16	.4
	25	12.5	50	20	.5
	30	15	60	24	.6
	35	17.5	70	28	.7
	40	20	80	32	.8

See F-14246 for conversions for other throttling ranges.

THROTTLING RANGE VS. PROP. BAND SETTING

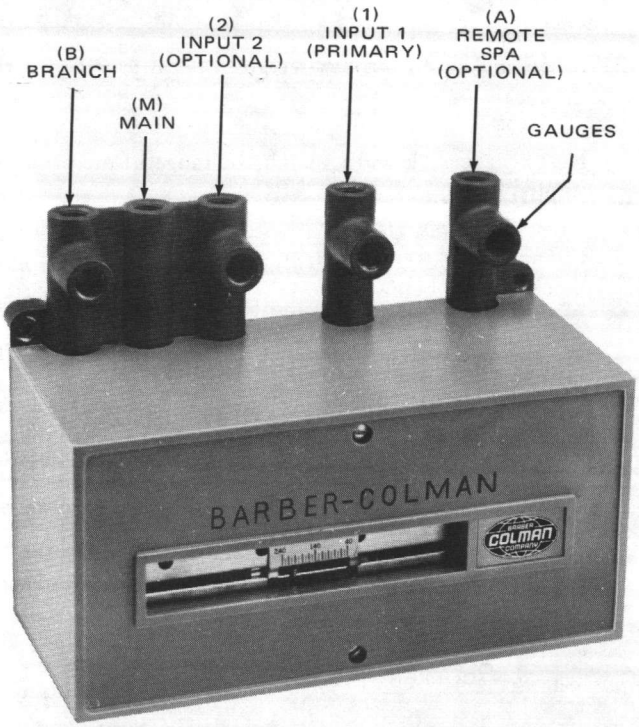

Figure 1 – RECEIVER-CONTROLLER PORT IDENTIFICATION

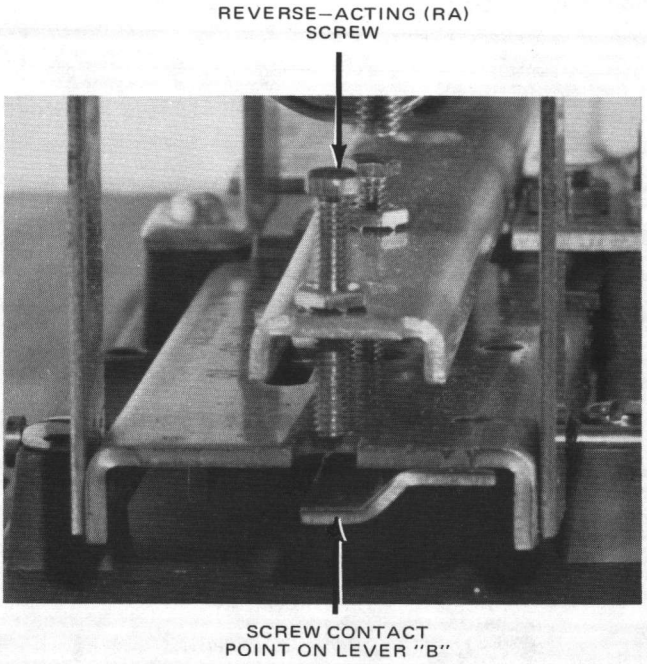

Figure 2a – REVERSE ACTING SCREW ADJUSTMENT

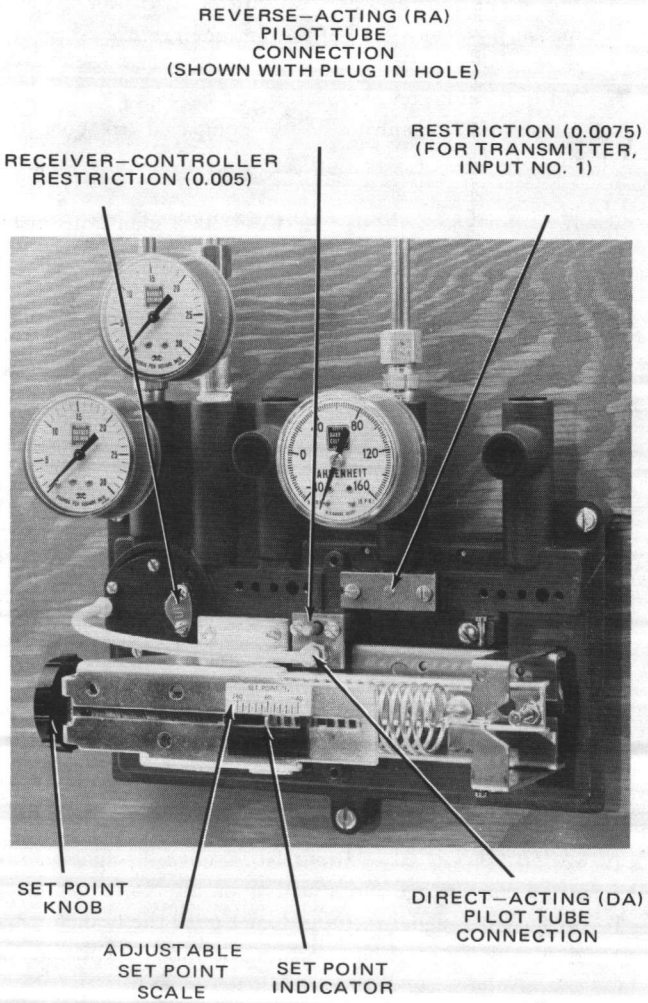

Figure 2

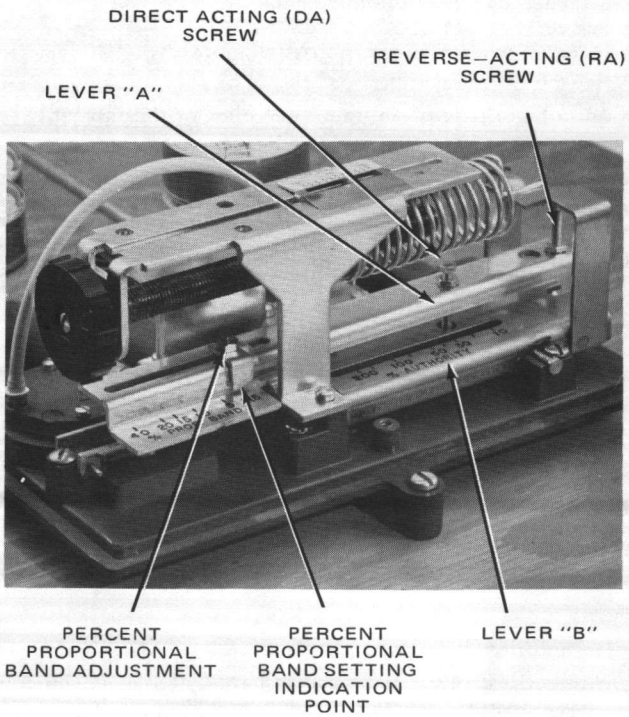

Figure 3

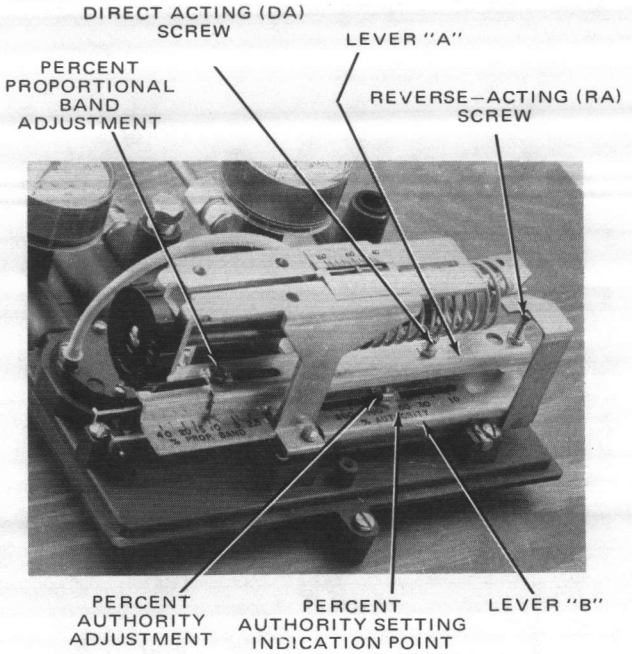

Figure 4

Percent Authority Adjustment

See Figure 4 for location of adjustment of percent authority.

Percent authority is the value that is the ratio of the effect of the secondary transmitter on output pressure compared with the effect of the primary transmitter. Example: 200°F span transmitters at both inputs 1 and 2.

10% authority means input 2 must change 10° in order to have the same affect as 1° change at input 1 in relation to the output pressure.

See Page 7 for method of calculating.

In cases where the transmitter is more than 200 feet from the receiver-controller or where the input signal is the output pressure of another controller or thermostat except TK-5000 series, the restriction for that input must be removed and the passages must be blocked. To block these passages, proceed as follows. Refer to Figure 2.

1. Remove restrictor cover plate screws.
2. Remove restrictor cover plate.
3. Remove restrictor plate and gaskets.
4. Install blocking gasket packaged with the receiver-controller.
5. Install cover plate and secure blocking gasket and cover plate with two screws.

If additional gaskets are required, order under Part Number PNC-42. These gaskets have a Red edge which will be visible above the top of the cover plate to indicate the restriction has been removed.

CALIBRATION

1. Set percent proportional band and percent authority adjustment and determining percent authority setting.
2. Select and apply proper set point decal provided with the receiver-controller.

   NOTE: The scale must match the range of the primary (input) transmitter.
3. Connect into transmitter No. 1 and 2 lines calibration box as shown below:

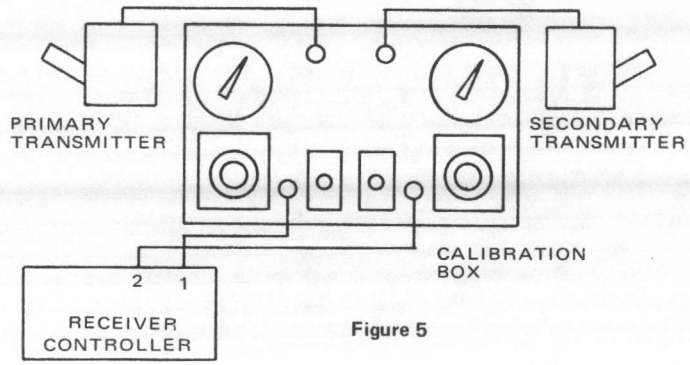

Figure 5

4. Position toggle switches to up (trans) position.
5. After making sure the transmitters are sensing a stable condition (temperature, humidity, pressure) measure the condition at the transmitter with an accurate measuring device such as thermometer, etc.
6. Note reading on calibration box guages for specific range of transmitter used, compared to condition measured at the transmitter.
7. If readings are within ±15°F on 200° span transmitter, ±4°F on a 50° span transmitter, ±6% RH on an 80% RH span transmitter or .15° H_2O on the differential transmitter proceed as follows. If readings are not within these limits on all transmitters except the differential pressure transmitter, replace the transmitter. When installing the new transmitter refer to the transmitter general instructions and make sure it is installed properly.
8. Adjust all permanent receiver guages to match the condition as measured with the accurate measuring device such as thermometer, etc. (Not calibration box gauge.)
9. Position toggle switches to down (calib) position.

TO CHECK PERCENT PROPORTIONAL BAND:

10. Single Input Units & Dual Input

A. Adjust the signal to Input No. 1 until 3 psig is read on the branch gauge. Note reading on the No. 1 test gauge.
B. Adjust the signal to Input No. 1 until the branch gauge indicates 13 psig. Note reading on the No. 1 test gauge.
C. Determine difference between step A & B.
D. If this difference is not correct for desired throttling range, adjust the percent proportional band adjustor in the proper direction and return to step A in calibration above.

FOR SINGLE INPUT UNITS ONLY –

11. Adjust the signal to input No. 1 until the permanent gauge indicates the desired temperature. In units with remote set point the pressure to input "A" must be 9 psig.

12. Rotate set point knob until 8 psig ±1 psig is obtained on the branch gauge.

13. Slide the set point scale until the desired temperature is read at the set point indicator.

    The single input unit is now calibrated; remove calibration box and reconnect transmitter.

FOR DUAL INPUT UNITS the Percent Authority must also be checked. To explain this we will use the following for an example:

Given				
OA	O	70	Secondary Transmitter (2)
HW	180	100	Primary Transmitter (1)

11. Determine percent authority setting, and adjust authority adjustment.

DETERMINING PERCENT AUTHORITY SETTING

The percent authority adjustment on the RKS 3002 and RKS 4002 receiver-controllers is similar to the reset of a submaster thermostat as used in a master-submaster system. However, the authority setting cannot be determined in the same manner due to the difference in spans of the transmitters. The calculation must be made using the formula on page six.

Example: Hot Water Reset from Outdoor Air

Refer to Figure 8, example of transmitter relationship chart, F-14245. Plot the limits as follows:

Given:	Outdoor Air	Hot Water
	–10F	180F
	60F	100F

Transmitters Range
O.A., –40 to +160F (200F° Span)
H. W., 40 to 240F (200F° Span)
Desired TR, 10F°

A. Reading on T-1 scale of Figure 8, plot point at upper limit of H.W. (180F) (Point 1) and lower limits of O.A. on T-2. (–10F). Point 1 becomes 180F (T-1) at –10F (T-2).

   Next, plot Point 2 at lower limit of H.W. (100F), and upper limit of O.A. on T-1 (60F). Point 2 becomes 100F (T-1) at 60F (T-2).

B. Draw vertical lines from Points 1 and 2 down to horizontal T-2 scale. Designate difference between two vertical lines as "B" (70F°).

C. Draw horizontal lines from Points 1 and 2 across to vertical T-1 scale. Designate difference between two horizontal lines as "A" (80F°).

D. Formula -

$$\% \text{ Authority Setting} - \frac{A}{B} \times K$$

A and B are as plotted on Chart F-14245

$$K = \frac{\text{Span of (O.A. Transmitter) T-2}}{\text{Span of (H.W. Transmitter) T-1}} \times 100$$

For above example

$$\% \text{ Authority Setting} = \frac{80^{\circ}F}{70^{\circ}F} \times 100$$

$$\% \text{ Authority Setting} = 1.14 \times 100$$

$$\% \text{ Authority Setting} = 114\%$$

Example: Room and Discharge Control

The calculations and plottings are the same for this system as for H.W. reset.

In this case the room transmitter is the primary transmitter and is connected to Input No. 1.

"K" FACTORS FOR CALCULATING PERCENT AUTHORITY

Input 1 Transmitter Span	Input 2 Transmitter Span	K Factor
50 F	50 F	100
50 F	200 F	400
50 F	80% RH	160
50 F	2" Water	4
200 F	50 F	25
200 F	200 F	100
200 F	80% RH	40
200 F	2" Water	1
80% RH	50 F	62.5
80% RH	200 F	250
80% RH	80% RH	100
80% RH	2" Water	2.5
2" Water	50 F	2,500
2" Water	200 F	10,000
2" Water	80% RH	4,000
2" Water	2" Water	100

12. CHECK PERCENT AUTHORITY

TO CHECK PERCENT AUTHORITY:

A. Adjust signal to Input 2 to equal Max. Temp. (in example 70°)
B. Adjust signal to Input 1 to equal Min. Temp. desired (in example 100°)
C. Adjust set point knob until a branch pressure of between 5 and 10 psig is read on the branch line gauge.
D. Note branch pressure reading.
E. Lower the signal to input No. 2 until the test gauge indicates the lowest desired temperature (in example 0°F).
F. Raise the signal to Input No. 1 until the branch gauge agains reads the same as it did in Step D.
G. Note the reading on the No. 1 test gauge. If it is not correct, (in example 180°) readjust the percent authority slider in the appropriate direction (Increase setting if reading is too much, decrease setting if reading is too little) and return to step A.

13. Adjust the signal to Input No. 1 until the permanent gauge indicates the min. desired temperature at input No. 1 in example 100°.

14. Adjust the signal to input No. 2 until the permanent gauge indicates the maximum desired temperature at input No. 2 in example 70°.

15. On units with remote set point adjustment, make certain that the signal from the set point adjustor is 9 psig.

16. Rotate set point knob until 8 psi ± 1 psi is obtained on branch pressure gauge.

17. Slide the set point scale until the minimum desired temperature (in example 100°F) is read at the set point indicator.

The unit is now calibrated: remove calibration box and reconnect transmitters.

NOTE: If system requires changing Percent Proportional Band unit, setpoint must be calibrated.

Band unit set point must be calibrated.

DIRECTION OF SET POINT KNOB ROTATION TO OBTAIN 8 PSIG BRANCH LINE PRESSURE.

Action	Initial Branch Pressure Below 8 PSI	Initial Branch Pressure Above 8 PSI
DA	CCW	CW
RA	CW	CCW

DIAL KNOB HAS 10 EQUAL DIVISIONS.

Transmitter Span Input 1	Each Division Represents
50°F	.25°F
200°F	1°F
80% RH	.4% RH
2" H_2O	.01" H_2O

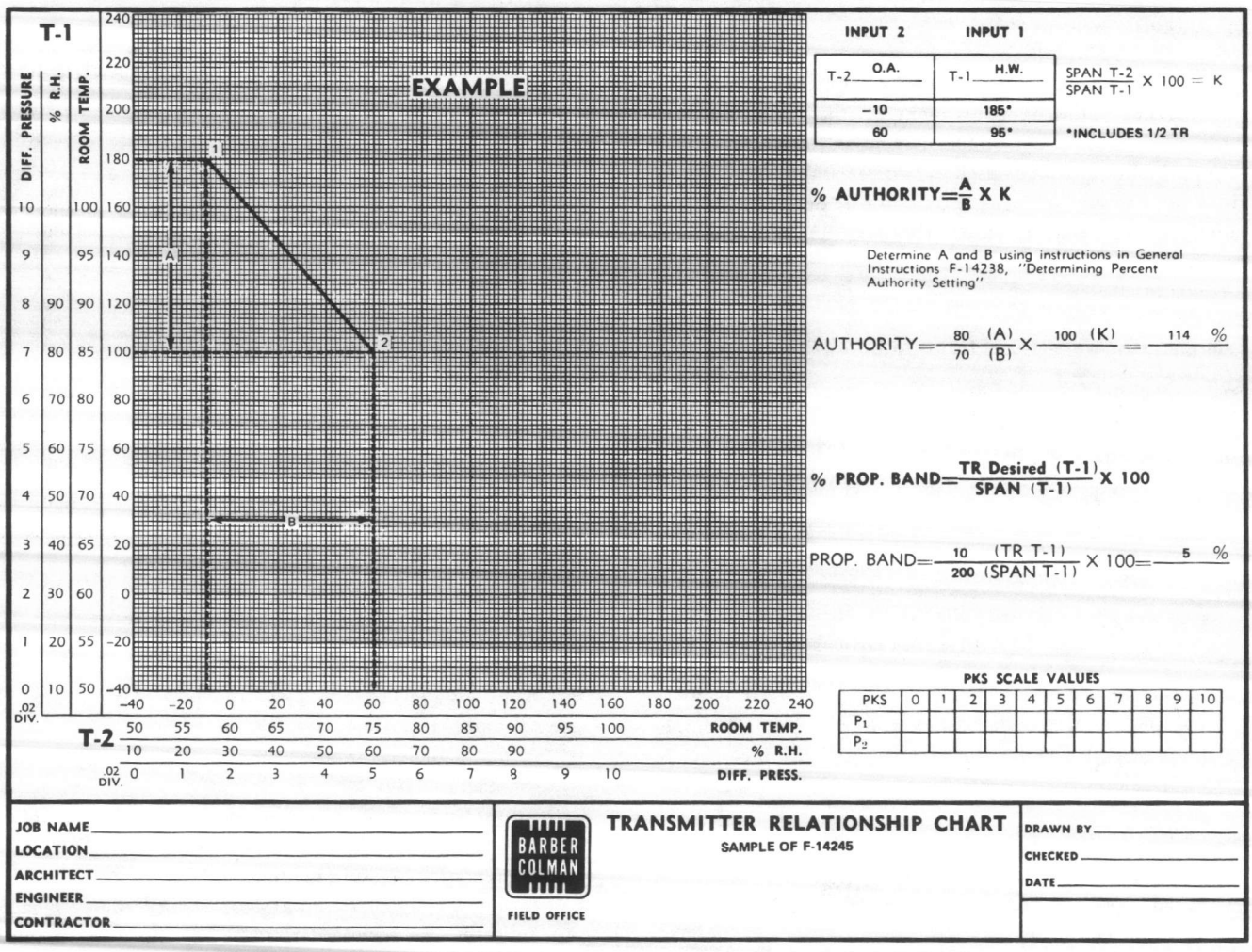

Figure 8

TYPICAL PIPING SINGLE INPUT RECEIVER CONTROLLER

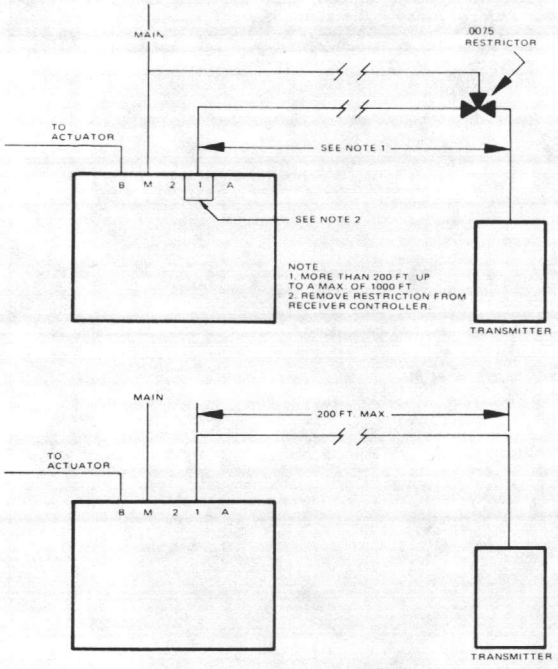

TYPICAL PIPING DUAL INPUT RECEIVER CONTROLLER

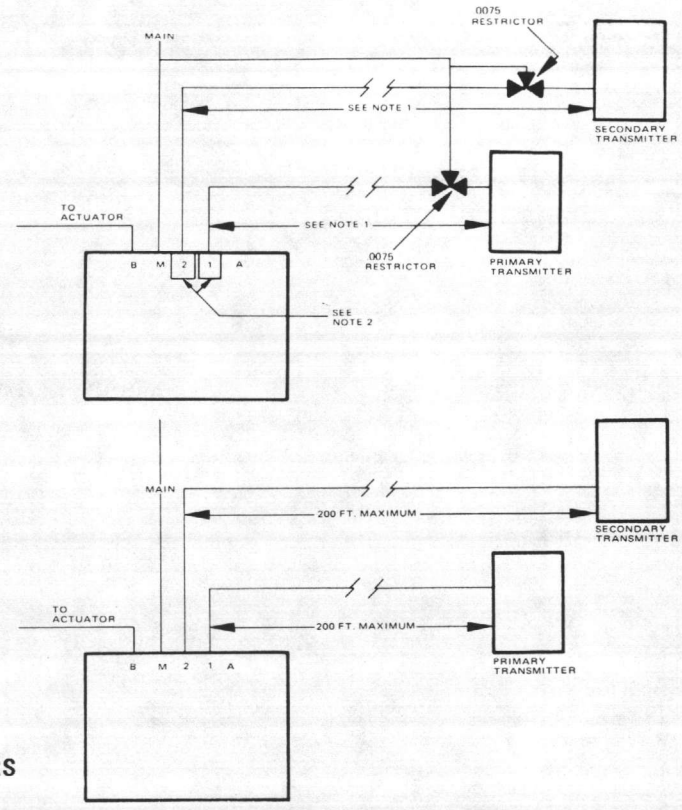

USE OF CONTROLLERS WITH RECEIVER–CONTROLLERS

There are occasions when it is desirable to use a controller such as a room thermostat, remote bulb thermostat, or receiver controller to provide the signal to the input chamber of a dual input receiver controller. A typical example of this is room and discharge control. These types of applications are acceptable as long as indication is not required and proper calculations are made for the authority adjustment setting.

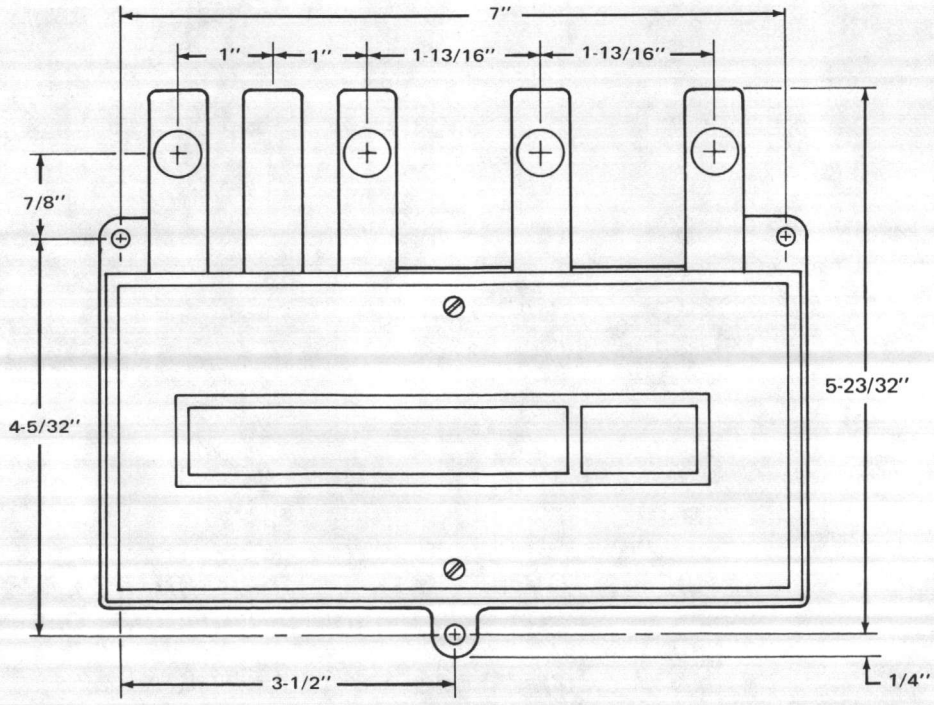

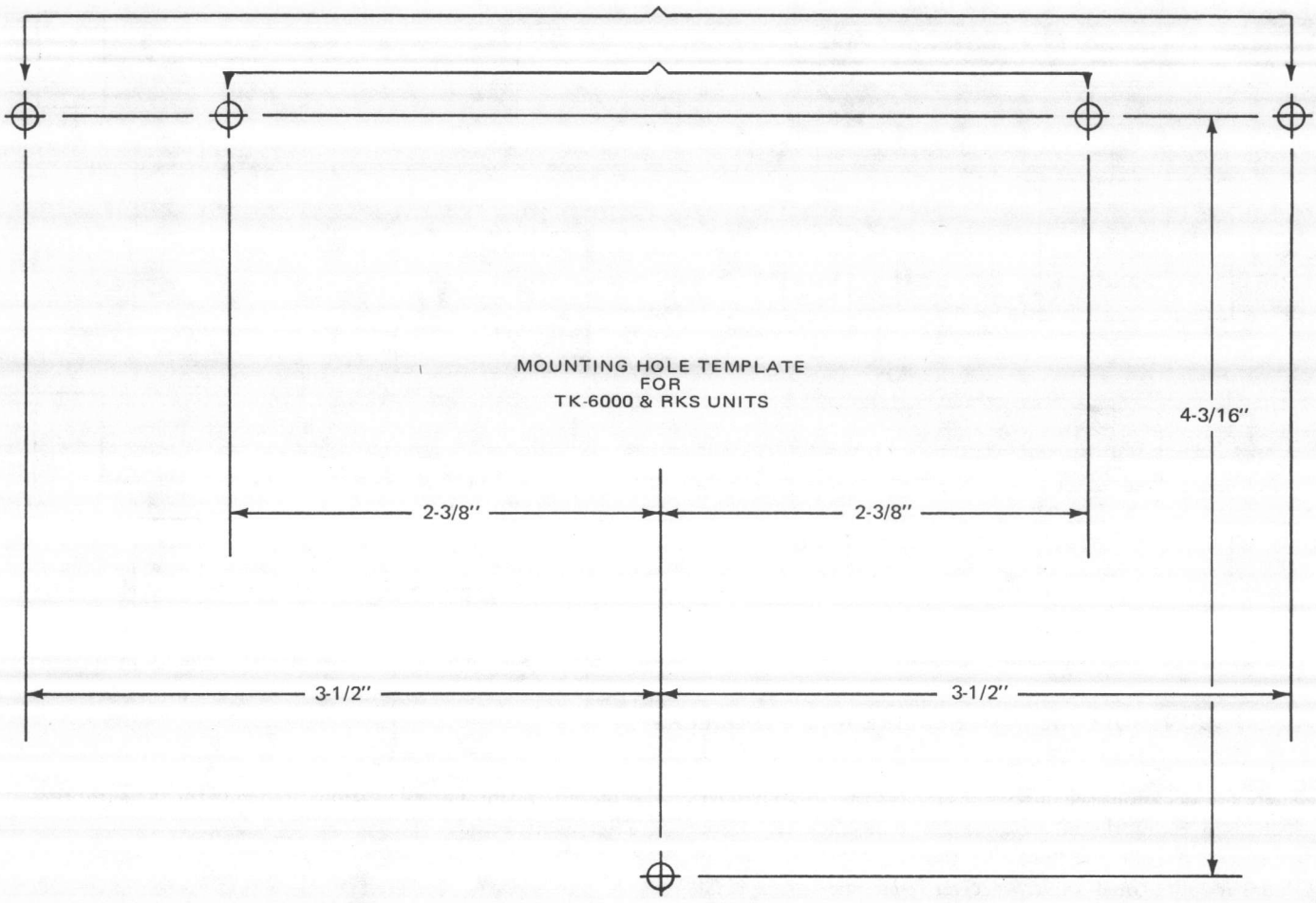

Barber-Colman Company
ENVIRONMENTAL CONTROLS DIVISION

1354 Clifford Avenue
P.O. Box 2940
Loves Park, IL U.S.A. 61132-2940

General Instructions

TKS-2031, 4014, 4017, 8014, 8033, 9014, 9017 Transmitters

Rod and Tube and Remote Bulb Transmitters

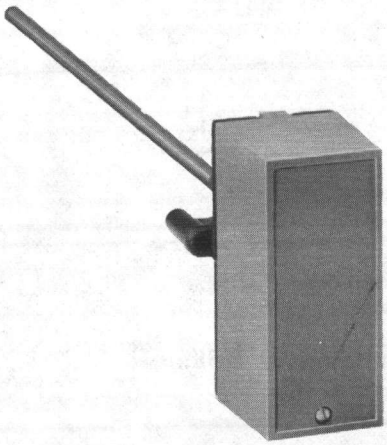

Rod and Tube Transmitter

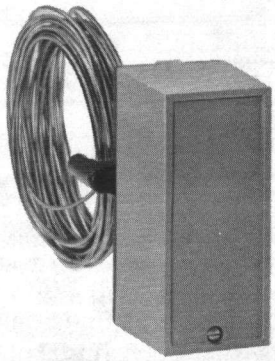

Averaging Bulb Transmitter

DEVICE INFORMATION

These transmitters are used with Barber-Colman RKS receiver-controllers for control of air or water temperatures. They may be used in conjunction with AKS receiver gauges for temperature indication only.

Pre-Installation

For list of parts required, see **INSTALLATION** Procedure for mounting and piping.

Before installation, make a visual inspection of the carton and transmitter for signs of damage.

INSTALLATION

Requirements

Air Consumption: 48 scim for sizing air compressor.

Supply Air Pressure: (when used for indication only): 18 psig.

Air Capacity: 36 scim for sizing air mains.

Air Connection: 1/8-inch FNPT.

The transmitter may be mounted in any position; however, preferred mounting is with the air connection at the bottom with the unit in a vertical position.

Procedure

MOUNTING OF ELEMENT (Figure 1): The 9-1/4-inch rod and tube transmitter is furnished with a mounting bracket threaded for use with standard AT-201 or AT-203 well. Attach the mounting bracket to the well, then insert transmitter element and attach transmitter to bracket with screws provided.

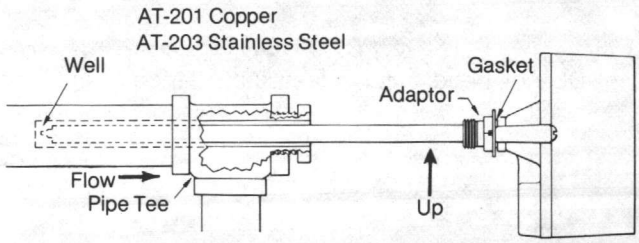

Figure 1

TKS-8014
TKS-8033
Transmitter

CAUTION

Well must be straight before inserting transmitter and be located in pipe tee as shown at least 15 feet from pump discharge or intake.

PERFORMANCE

Device	Part No.	Action	Mounting	Max. Safe Temp. At Element	Range (Non-Adjustable)	Output Signal (psig)
Straight Bulb	TKS-2031	DA	Wall or Duct	93°C (200°F)	-40 to 71°C (-40 to 160°F)	3–15
Averaging Bulb	TKS-4014	DA	Duct	149°C (300°F)	-18 to 38°C (0 to 100°F)	3–15
Averaging Bulb	TKS-4017	DA	Duct	149°C (300°F)	10 to 66°C (50 to 150°F)	3–15
Rod & Tube	TKS-8014	DA	Immersion	149°C (300°F)	-18 to 38°C (0 to 100°F)	3–15
Rod & Tube	TKS-8033	DA	Immersion	149°C (300°F)	4 to 116°C (40 to 240°F)	3–15
Rod & Tube	TKS-9014	DA	Duct	149°C (300°F)	-18 to 38°C (0 to 100°F)	3–15
Rod & Tube	TKS-9017	DA	Duct	149°C (300°F)	10 to 66°C (50 to 150°F)	3–15

DA = Direct-Acting

AIR DUCT MOUNTING (Figure 2): Drill three holes in the duct and fasten the transmitter to the duct with two screws provided. Use Figure 2 as a template.

Note: Locate transmitter as far from the fan as possible.

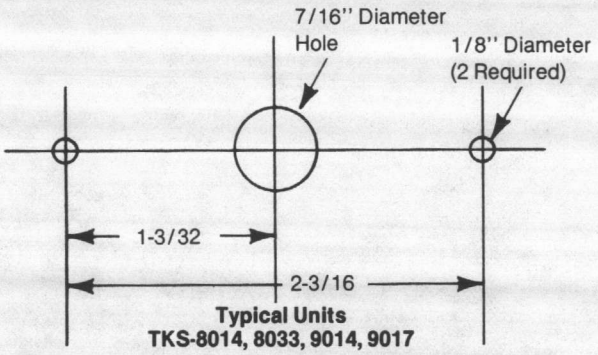

Figure 2. Full Scale Template for Drilling Rod/Tube Unit Holes

AIR DUCT MOUNTING — TKS-4014, TKS-4017 (Figure 3): Transmitters equipped with 5/64-inch x 24-foot averaging bulb include a mounting cork shown in Figure 3. Drill holes as shown in Figure 4. Mount transmitter with two screws provided. Thread element through 7/8-inch hole and apply cork to it. Secure element in duct, to duct supports, or use a length of hard drawn copper. Attach copper to duct, and attach element to copper with a wire tie. Insert cork into hole. An alternate method is shown in Figures 5 and 6.

CAUTION

Do not bend bulb in less than 3-inch diameter circle.

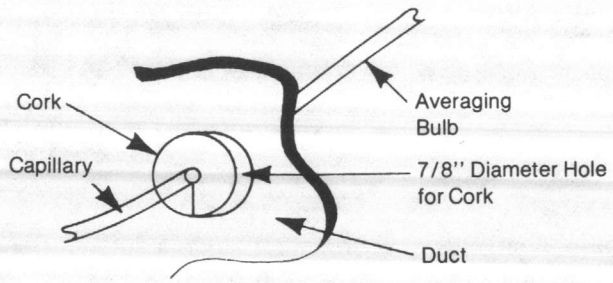

Figure 3. Installing Averaging Bulb Through Duct (See Figure 4)

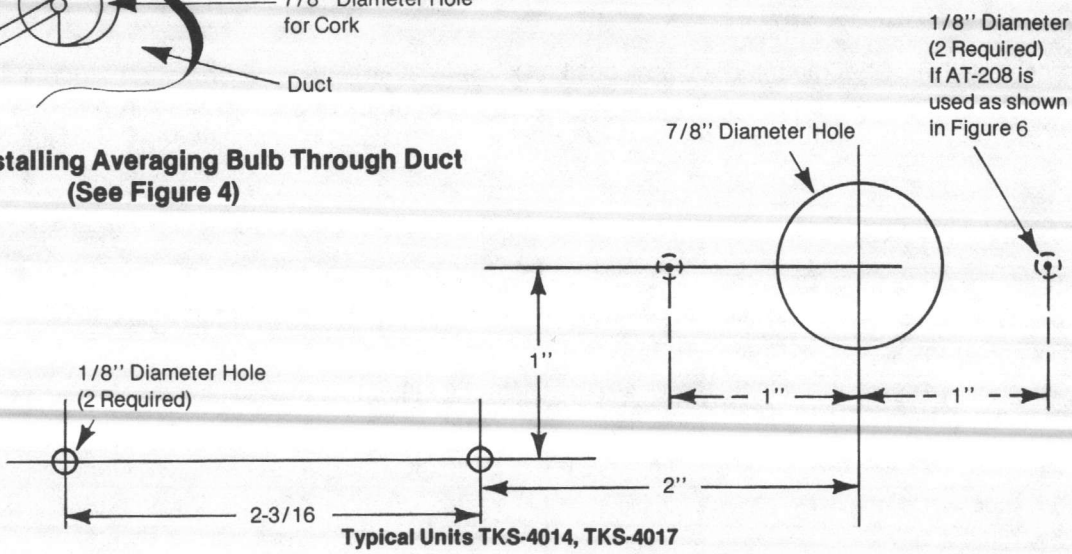

Figure 4. Full Scale Template for Drilling Averaging Unit Holes

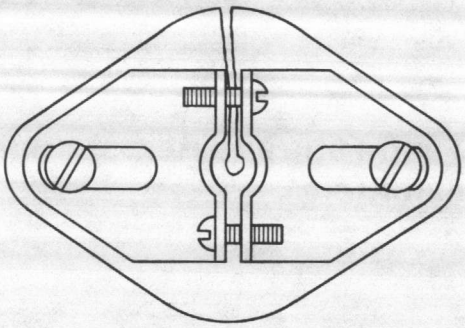

Figure 5. AT-208 Bracket and Gasket Assembly Used in Place of Cork Supplied with Unit

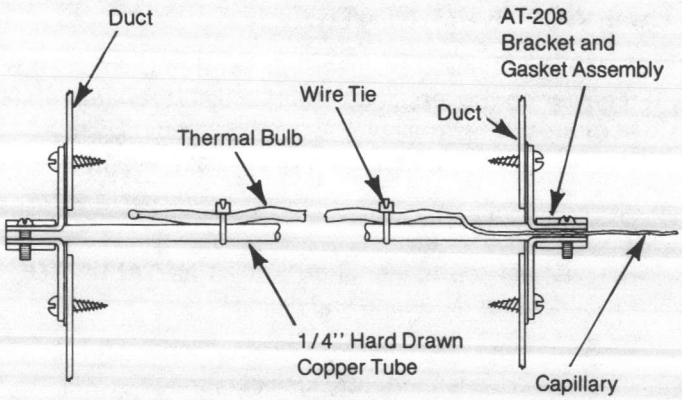

Note: An access panel is required to allow for tying bulb to copper after it is installed in the duct.

Figure 6. Mounting Averaging Bulb Through Duct

OUTDOOR MOUNTING (Figure 7): A bulb clip and shield (AT-211) are available for mounting the bulb to the outside wall or surface. After mounting the bulb with the clip, place the shield directly over the bulb and fasten the shield to the wall surface. Transmitter is located inside of building on wall or duct. Typical unit is TKS-2031, supplied with 3-foot capillary.

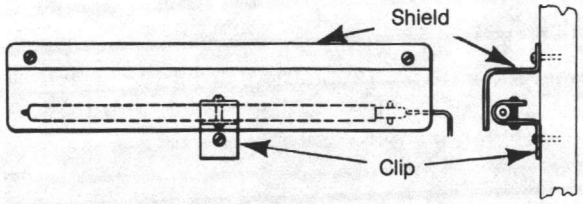

CAUTION
Do not crimp bulb with clamp.

Figure 7. Outdoor Wall Mounting of Element With AT-211 Bulb Shield

ADJUSTMENTS: All transmitters are factory set for the range indicated in the Performance table. No attempt should be made to readjust units in the field.

PIPING: When used in conjunction with a receiver-controller with less than 200 feet of 1/4-inch OD tubing between the receiver-controller and the transmitter, the air supply to the transmitter is through the receiver-controller as shown in Figure 8.

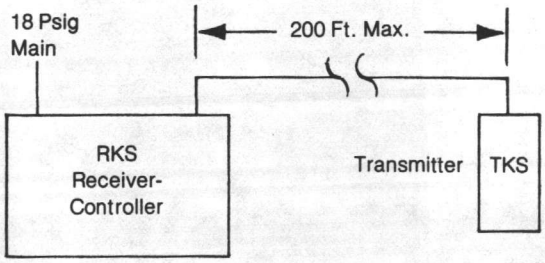

Figure 8

When the distance between the receiver-controller and the transmitter is over 200 feet but less than 1000 feet maximum recommended (Figure 9), it is necessary to provide a main air supply at the transmitter location and remove the built-in restrictor from the receiver-controller input.

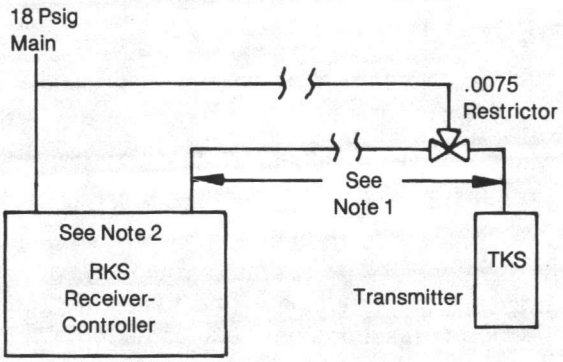

Note: 1. More than **200** ft. up to a max. of **1000** ft.
2. Remove restriction from receiver-controller.

Figure 9

When the transmitter is used in conjunction with a receiver gauge for indication only, it is necessary to supply an air main to each transmitter through an .0075 restrictor (Figures 10 and 11).

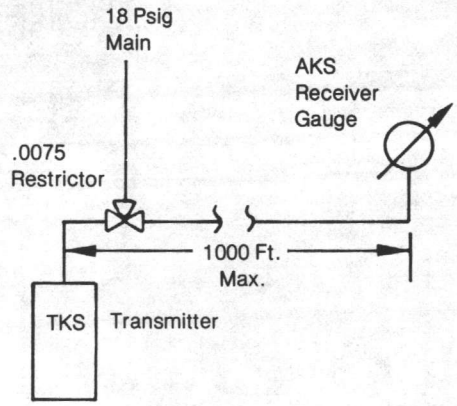

Figure 10

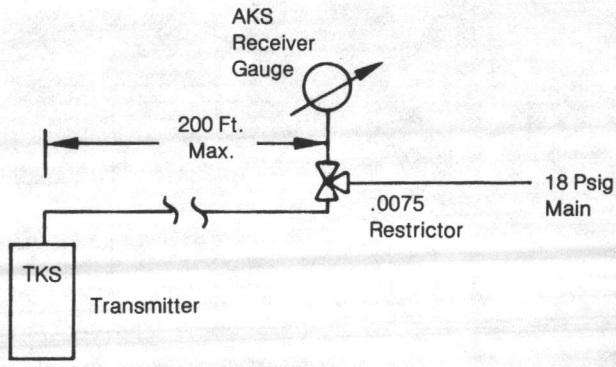

Figure 11

Note: It is recommended that field tubing termination to the transmitter be made with at least 6 inches of 1/4-inch O.D. plastic tube to avoid the possibility of forces from the tubing affecting the transmitter.

CHECKOUT

1. Connect the calibration box into No. 1 and 2 lines as shown in Figure 12 and 13.
2. Move toggle switches to the up (transmitter) position.
3. After making sure the transmitter is sensing a stable condition (temperature, humidity, pressure) measure the condition at the transmitter with an accurate measuring device such as thermometer, etc.
4. Note reading on calibration box gauges for specific ranges of transmitter used, compared to condition measured at the transmitter. Readings should be within $\pm 15^{o}F$. If readings are not within these limits, replace the transmitter.

RUN/ADJUST

No adjustments are required on the transmitter.

MAINTENANCE

The unit requires no maintenance under normal conditions.

REPAIR

Field repair is not recommended. If the system is not operating correctly, and the reason is traced to the transmitter, it should be replaced.

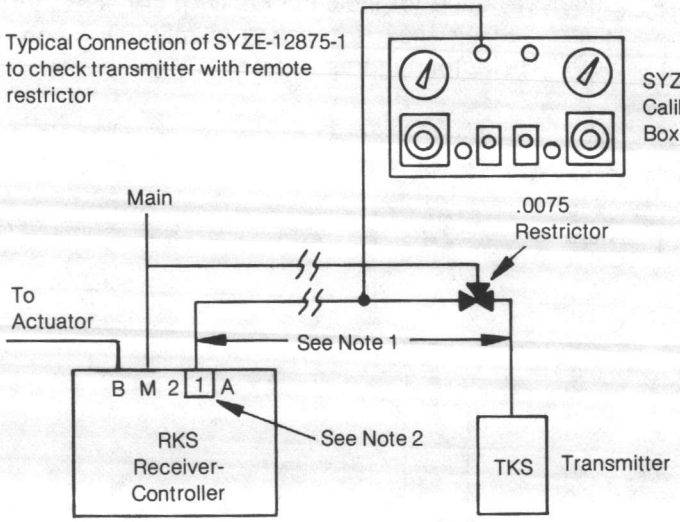

Note: 1. More than **200** ft. up to a max. of **1000** ft.
2. Remove restriction from receiver-controller.

Figure 12

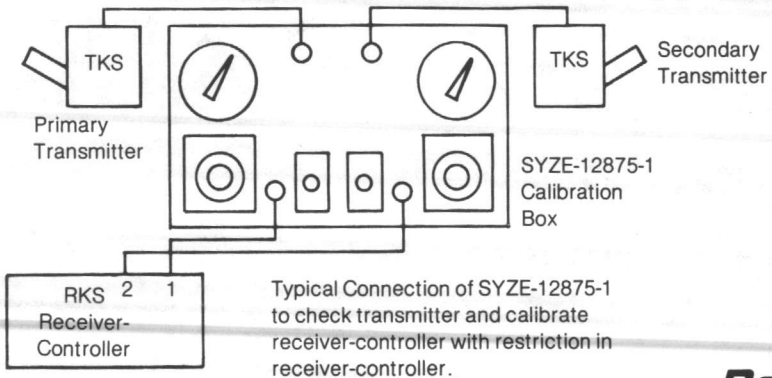

Typical Connection of SYZE-12875-1 to check transmitter and calibrate receiver-controller with restriction in receiver-controller.

Figure 13

Barber-Colman Company
ENVIRONMENTAL CONTROLS DIVISION

1354 Clifford Avenue
P.O. Box 2940
Loves Park, IL U.S.A. 61132-2940

General Instructions

AL-100, AL-110, AL-110-201, AL-120, AL-125, AL-140 Solenoid Air Valves

APPLICATION

For applications where an electrical circuit is used to control a pneumatically operated device. Used to direct supply air to a pneumatic device when the coil is energized or de-energized depending on the supply and exhaust air connections.

All models except AL-110-201

AL-110-201 Only

SPECIFICATIONS

Construction: Electrical coil is enclosed in a corrosion resistant metal housing.
Ambient Temperature Limits: 40° to 130°F (4° to 54°C).
Air Temperature: 40° to 130°F (4° to 54°C).
Power Consumption: 7 Watts (energized).
Maximum Inlet Pressure: 30 psig (207 kPa).
Flow Capacity (air): .5 scfm (236 mL/s) at 15 psig supply and 1 psi (6.9 kPa) drop.
Air Connections: Three barbed fittings marked: N.O. (Normally Open), N.C. (Normally Closed) and Com (Common) for 1/4" O.D. plastic tubing.
Electrical Connections: 1/2" conduit hole and 18" (457 mm) leads on the coil.
Mounting: Unit designed to mount in any position to wall or subpanel of a cabinet with two #8 sheet metal screws (screws not included). AK-52582 mounting bracket (not included) can be used for mounting to AD-8953 track (not included).
Dimensions: 4" (102 mm) high × 2-11/32" (60 mm) wide × 3-9/16" (90 mm) deep.

Solenoid Part No.	Voltage (AC 60 Hz)
AL-100	24
AL-110	120
AL-110-201*	120
AL-120	208
AL-125	240
AL-140	480

*Unit has 4-1/2' (1.4 m) 3-wire power cord.

OPTIONS None

ACCESSORIES

AK-52582	Auxiliary mounting plate for track mounting
AK-8953	Mounting track

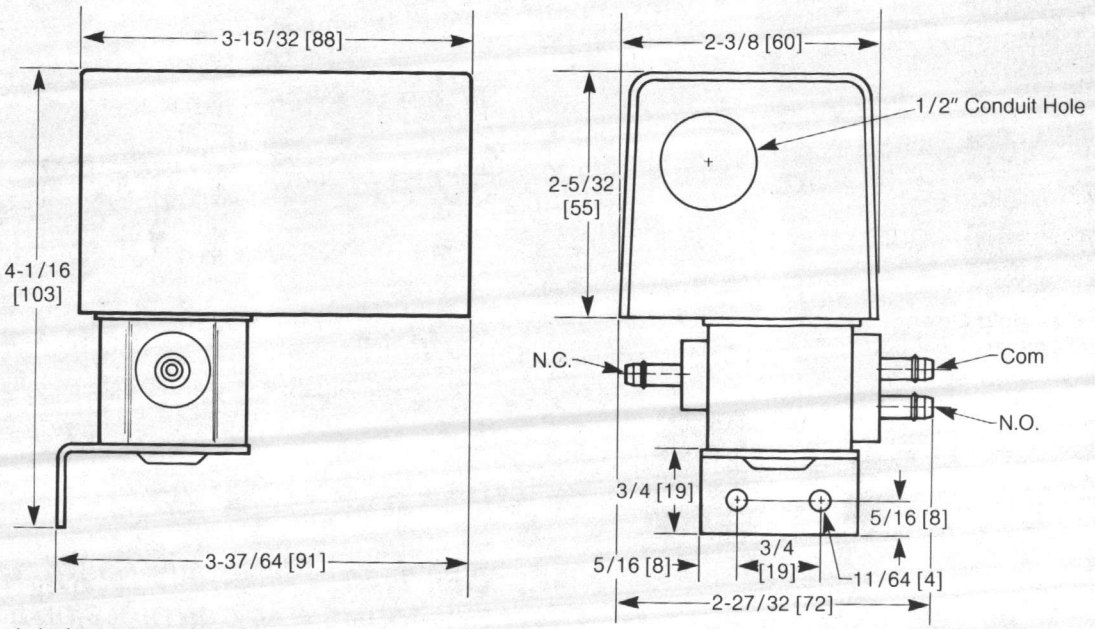

Dimensions are in inches; mm are in [ ]

Figure 1. Mounting Dimensions

INSTALLATION

Remote Mounting: Fasten to wall or duct with two #8 sheet metal screws or equivalent. This method requires the use of the enclosure on the coil. An integral mounting plate is provided or unit may be mounted to an AK-52582 auxiliary mounting plate.

Rotation of solenoid enclosure to position the wiring compartment, if required by application:

1. Remove cover.
2. Loosen coil hold down nut.
3. Rotate enclosure to desired position.
4. Tighten coil hold down nut.

CAUTION

Do not over-tighten as this may cause distortion of plunger tube or damage coil.

5. Replace cover.

Inside Cabinet Mounting: Fasten to subpanel of cabinet with two #8 sheet metal screws. An alternate method requires track mounting in AD-8953 mounting track. This method requires the use of the AK-52582 auxiliary mounting plate.

NOTE

When mounting inside of an approved electrical enclosure, the wiring enclosure of the solenoid may be removed to conserve panel space. UL listing is void if wiring enclosure of the solenoid is removed.

Inside-Outside Mounting: Install with electrical portion inside of an approved electrical enclosure and the valve body outside of the enclosure. This type of mounting requires a 9/16" (14 mm) dia. hole in the enclosure. Enclosure must be of 18 to 20 gage thickness (.0478" to .0359", 1.21 mm to .91 mm).

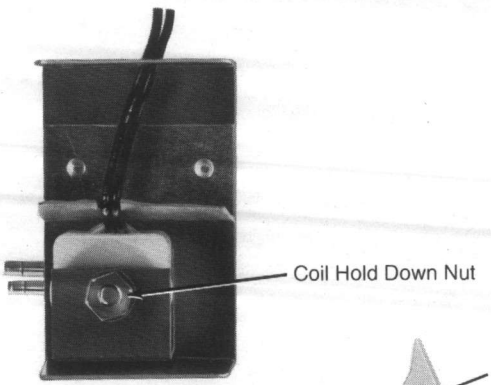

Figure 2. Coil Hold Down Nut Location

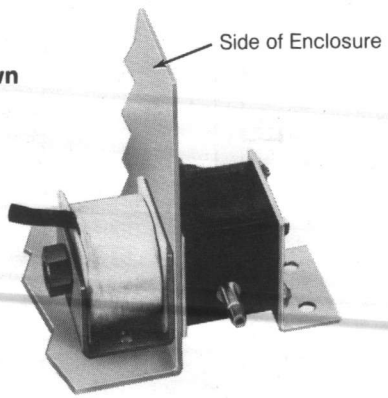

Figure 3. Solenoid Mounting Location

1. Remove cover.
2. Remove coil hold down nut. (See Figure 2.)
3. Remove coil and lower half of solenoid enclosure.
4. Install plunger tube through hole in electrical enclosure. (See Figure 3.)
5. Re-install coil and coil hold down nut; tighten nut.

CAUTION

Do not over-tighten as this may cause distortion of plunger tube or damage coil.

WIRING

Make all electrical connections according to job wiring diagrams and in compliance with national and local codes. A hole is provided in the metal enclosure for connection of 1/2" conduit. Enclosure may be used as a wiring compartment. Units are provided with 18" (.5 m) leads on the coil [except AL-110-201, which has 4-1/2' (1.4 m) 3-wire power cord].

MAINTENANCE

Regular maintenance of the total system is recommended to assure sustained optimum performance.

REPAIR

The only replacement part offered is the solenoid coil.

Solenoid Part No.	Voltage (AC)	Coil Part No.
AL-100-0-0-1	24	PNR-300-110
AL-110-0-0-1	120	PNR-300-120
AL-120-0-0-1	208	PNR-300-130
AL-125-0-0-1	240	PNR-300-140
AL-130-0-0-1	277	PNR-300-150
AL-140-0-0-1	480	PNR-300-060

TYPICAL APPLICATION

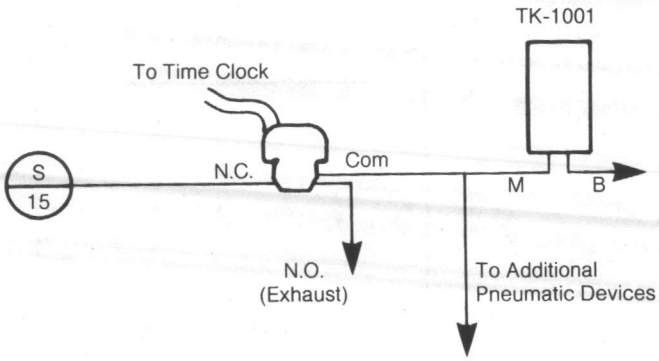

Figure 4. Typical Application

Barber-Colman Company
ENVIRONMENTAL CONTROLS DIVISION

1354 Clifford Avenue
P.O. Box 2940
Loves Park, IL U.S.A. 61132-2940

LITHO IN U.S.A.

General Instructions

PP-3013, PP-3113
Pressure Controller

A bleed type device for proportional pressure control of static or differential pressures. It is used with pneumatic actuators to control air flow or pressures at terminal units such as mixing boxes.

Construction Rugged metal housing incorporating a sensitive diaphragm.
Supply Air Pressure 30 psig maximum; 15 or 20 psig nominal.
Air Connections Barbed post for 1/4" I.D. tube on high and low taps and 1/4" O.D. tube on output.
Air Consumption For compressor sizing .016 standard cubic feet per minute (scfm) for 15 psig supply and .024 scfm for 20 psig supply.
Air Capacity For sizing air mains 36 standard cubic inches per minute (scim) for 15 psig supply and 50 scim for 20 psig supply.
Maximum Safe Static Pressure 12" W.C.
Dimensions 5-3/4" (146 mm) high × 5" (127 mm) wide × 5" (127 mm) deep.

OPTIONS None

ACCESSORIES

AP-301 Duct static pressure sensing tip used in areas with air turbulence.
AP-305 Duct static pressure sensing tip used in areas with very low actuating pressure.
AT-532-111-1-01 .0075 tee restrictor for 5/32" plastic tubing.
AT-532-222-1-01 .0075 tee restrictor for 1/4" plastic tubing.
AT-532-098-1-01 .0075 restrictor (white)
Tool-95 Pneumatic calibration tool kit.

Part Number	Throttling Range	Setpoint**	Action*
PP-3013	.04" W.C. per 10 psig Change	Adj. .05 to .9"† W.C. Differential	DA
PP-3113			RA

*Direct Acting (DA) — Increase in differential pressure produces increase in output pressure.
Reverse Acting (RA) — Increase in differential pressure produces decrease in output pressure.
**Unit does not have setpoint scale.
†Factory set .5" W.C. for 8±2 psig output.

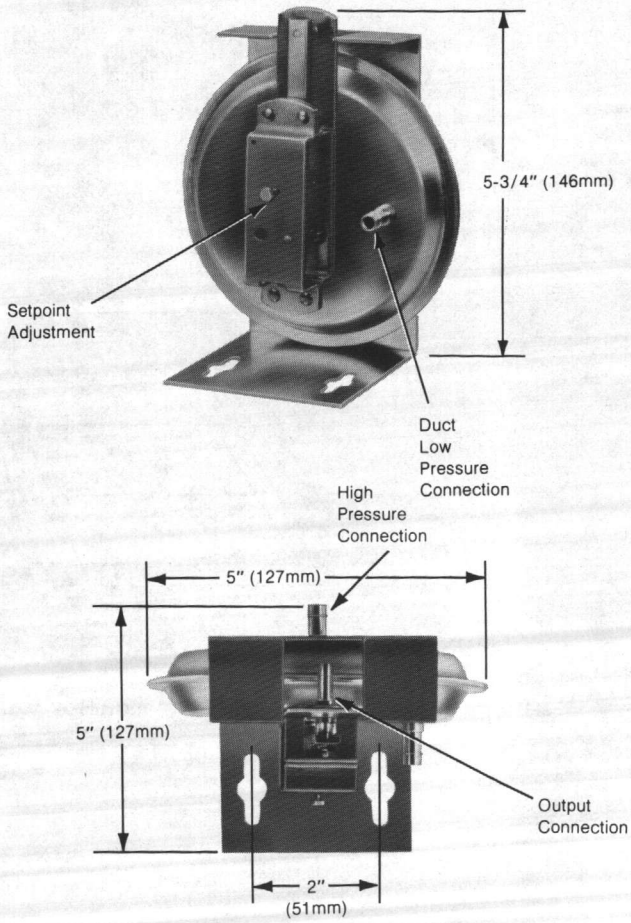

INSTALLATION

Controller **must** be mounted with diaphragm in horizontal plane with "high" pressure tap on top. See Figure 5 for typical mounting arrangement. Keyhole slots are provided for No. 10 sheet metal screws.

ADJUSTMENTS

Pressure controllers are shipped from the factory, calibrated to provide an 8 ± 2 psig control line pressure when the control point is equal to the setpoint. The setpoint is factory set at .5" of water. The throttling range is fixed at .04" W.C. per 10 psig control line pressure change.

SYSTEM SET-UP

Refer to Figures 1 through 4 for typical piping arrangements.

1. Adjust supply air pressure to the controller, i.e., 15 psig.
2. Connect a test magnehelic gauge across the pressure taps if a permanent is not installed.
3. Reading the differential pressure on the magnehelic, rotate the setpoint (CW to increase differential) until proper differential is obtained.

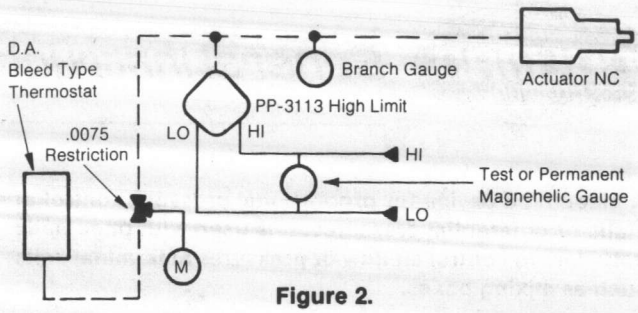

Figure 2.

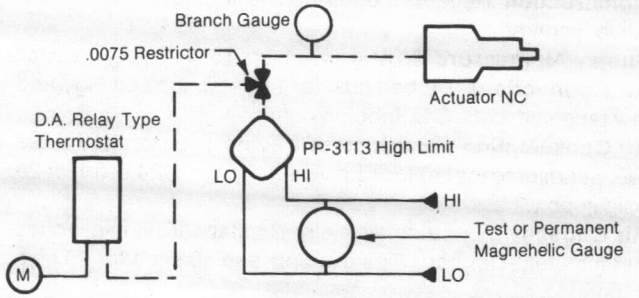

Figure 3.

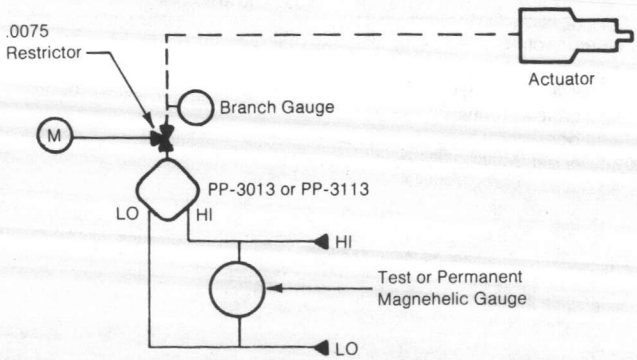

Figure 1.

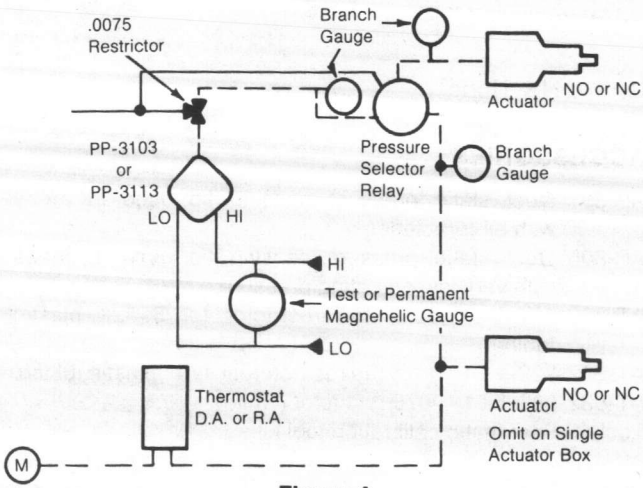

Figure 4.

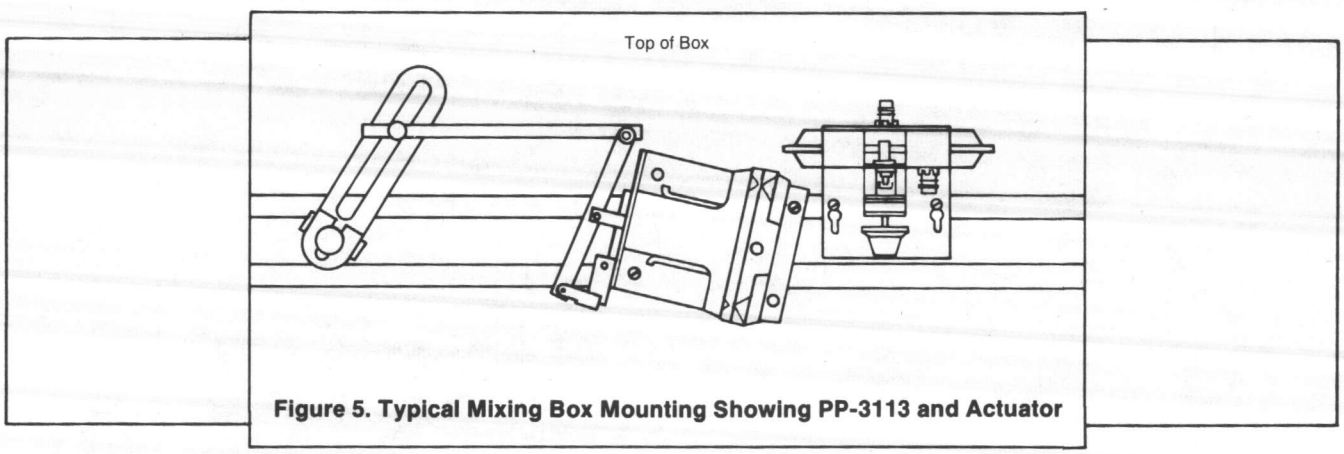

Figure 5. Typical Mixing Box Mounting Showing PP-3113 and Actuator

Barber-Colman Company
ENVIRONMENTAL CONTROLS DIVISION

1354 Clifford Avenue
P.O. Box 2940
Loves Park, IL U.S.A. 61132-2940

General Instructions

Pneumatic Damper Actuators MK-4401, MK-4411, MK-4421

General

These pneumatic actuators are designed for use as damper positioners. The type of positioning, proportional or two-position, is determined by the controller, such as a thermostat or relay. Actuators are positioned by air pressure acting upon a diaphragm and piston. Opposing the force on the top of the piston is a spring. As the air pressure increases, the piston force overcomes the spring force and the actuator shaft extends. If the pressure lessens, the spring force retracts the shaft.

Units are constructed of a die cast aluminum housing enclosing a molded neoprene diaphragm, steel piston and piston shaft, sintered bronze shaft-guide bushing and steel spring.

The molded neoprene diaphragm has a circular bead which mates with a groove in the pressure housing insuring positive locating and sealing of the diaphragm with the housing.

Installation

Make all connections in accordance with job piping diagram. Use 1/4" OD copper or plastic tubing to connect the actuator to the controller. Units have 1/8" NPT female inlet for connection to the supply air. Actuators are mounted by means of four screws through the mounting bracket. Attach connector to lever arm, insert the rod in the connector and tighten set screw. Figure 1 illustrates damper linkage for 90° rotation.

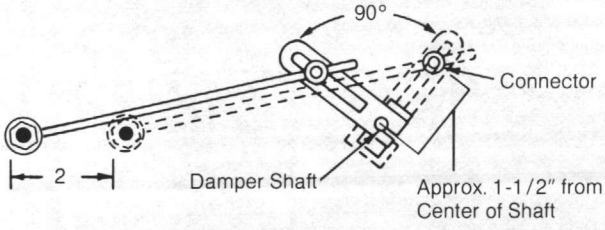

Figure 1

Adjustable Starting Pressure

Actuators are available with adjustable starting pressure. These units are generally used for sequencing operation. To adjust the starting pressure, turn adjusting nut supporting the spring clockwise to decrease and counterclockwise to increase the starting pressure, when viewing the actuator from the shaft end (Figure 2). Each rotation of the adjusting nut changes the starting pressure 0.04 psi.

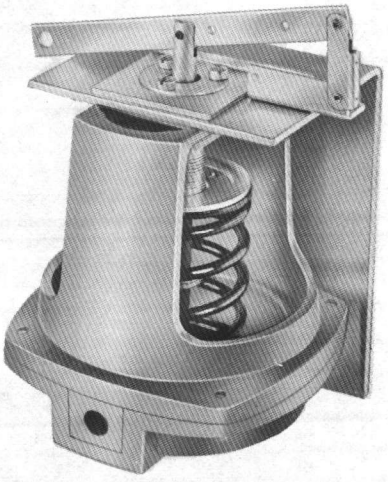

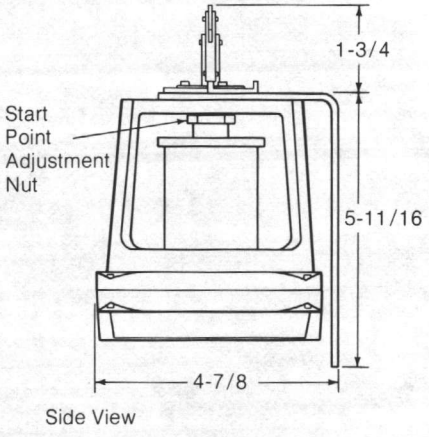

Figure 2

Diaphragm Replacement

If the actuator diaphragm should leak, it may easily be replaced by removing the four screws holding the top power housing.

Remove the screws and old diaphragm. Insert new diaphragm over piston.

Put the top power housing back in place making sure the bead on the diaphragm is in the housing groove and the screw holes are lined up. Tighten housing screws.

Barber-Colman Company
ENVIRONMENTAL CONTROLS DIVISION

1354 Clifford Avenue
P.O. Box 2940
Loves Park, IL U.S.A. 61132-2940

LITHO IN U.S.A.

F-13775-1

BARBER COLMAN COMPANY

SUBMITTAL DATA

CLIMATE CONTROL AIR COMPRESSORS

LITHO IN U.S.A. 11-83

SPECIFICATION FOR SINGLE STAGE CLIMATE CONTROL COMPRESSORS

STANDARD EQUIPMENT

- Totally enclosed metal belt guard
- Cast iron compressor pump
- GE or equivalent motors
- Automatic overload protector standard on all single phase motors through 1 HP
- Magnetic starters standard on all 3 HP motors
- All electrical wiring enclosed in flexible metal cable
- Intake air filter — mufflers
- Pressure switch, gauge and check valve
- Safety valve, tank drain and outlet valve
- All tanks ASME

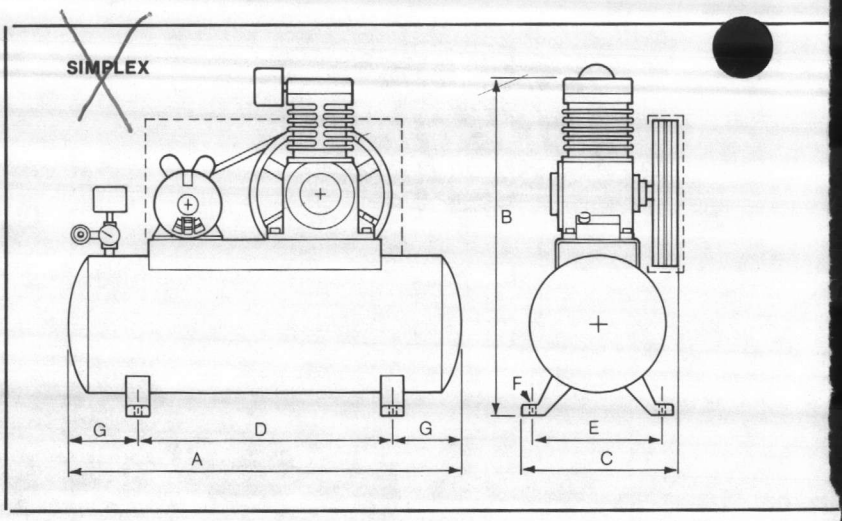

Model No.	HP	RPM	Tank Size (Gal.)	Motor Data	CFM @ 100 PSI	Dimensions (Inches)						
						A	B	C	D	E	F	G
SINGLE STAGE SIMPLEX												
K105-4-00-4	1/2	590	17	115-60-1	1.8	37	26	16	18	8	9/16	9-1/2
K105-5-00-4	1/2	590	30	115-60-1	1.8	38	34	19	22	13-3/4	9/16	8
K105-6-00-4	1/2	590	60	115-60-1	1.8	47	37	25	26	18-1/2	9/16	10-1/2
K106-4-00-4	1/2	590	17	208-60-3	1.8	37	26	16	18	8	9/16	9-1/2
K106-5-00-4	1/2	590	30	208-60-3	1.8	38	34	19	22	13-3/4	9/16	8
K106-6-00-4	1/2	590	60	208-60-3	1.8	47	37	25	26	18-1/2	9/16	10-1/2
K107-4-00-4	1/2	590	17	230/460-60-1	1.8	37	26	16	18	8	9/16	9-1/2
K107-5-00-4	1/2	590	30	230/460-60-1	1.8	38	34	19	22	13-3/4	9/16	8
K107-6-00-4	1/2	590	60	230/460-60-1	1.8	47	37	25	26	18-1/2	9/16	10-1/2
K108-4-00-4	3/4	400	17	115-60-1	2.7	37	26	16	18	8	9/16	9-1/2
K108-5-00-4	3/4	400	30	115-60-1	2.7	38	34	19	22	13-3/4	9/16	8
K108-6-00-4	3/4	400	60	115-60-1	2.7	47	37	25	26	18-1/2	9/16	10-1/2
K109-4-00-4	3/4	400	17	208-60-3	2.7	37	26	16	18	8	9/16	9-1/2
K109-5-00-4	3/4	400	30	208-60-3	2.7	38	34	19	22	13-3/4	9/16	8
K109-6-00-4	3/4	400	60	208-60-3	2.7	47	37	25	26	18-1/2	9/16	10-1/2
K110-4-00-4	3/4	400	17	230/460-60-3	2.7	37	26	16	18	8	9/16	9-1/2
K110-5-00-4	3/4	400	30	230/460-60-3	2.7	38	34	19	22	13-3/4	9/16	8
K110-6-00-4	3/4	400	60	230/460-60-3	2.7	47	37	25	26	18-1/2	9/16	10-1/2
K111-5-00-4	1	510	30	115-60-1	3.8	38	34	19	22	13-3/4	9/16	8
K111-6-00-4	1	510	60	115-60-1	3.8	47	37	25	26	18-1/2	9/16	10-1/2
K111-7-00-4	1	510	80	115-60-1	3.8	63	37	25	35	18-1/2	9/16	14
K112-5-00-4	1	510	30	208-60-3	3.8	38	34	34	22	13-3/4	9/16	8
K112-6-00-4	1	510	60	208-60-3	3.8	47	37	37	26	18-1/2	9/16	10-1/2
K112-7-00-4	1	510	80	208-60-3	3.8	63	37	37	35	18-1/2	9/16	14
K113-5-00-4	1	510	30	230/460-60-3	3.8	38	34	34	22	13-3/4	9/16	8
K113-6-00-4	1	510	60	230/460-60-3	3.8	47	37	37	26	18-1/2	9/16	10-1/2
K113-7-00-4	1	510	80	230/460-60-3	3.8	63	37	37	35	18-1/2	9/16	14
SINGLE STAGE DUPLEX												
K205-6-00-4	1/2	590	60	115-60-1	1.8	56	44	25	26	18-1/2	9/16	15
K206-6-00-4	1/2	590	60	208-60-3	1.8	56	44	25	26	18-1/2	9/16	15
K207-6-00-4	1/2	590	60	230/460-60-3	1.8	56	44	25	26	18-1/2	9/16	15
K208-6-00-4	3/4	400	60	115-60-1	2.7	56	44	25	26	18-1/2	9/16	15
K209-6-00-4	3/4	400	60	208-60-3	2.7	56	44	25	26	18-1/2	9/16	15
K210-6-00-4	3/4	400	60	230/460-60-3	2.7	56	44	25	26	18-1/2	9/16	15
K211-6-00-4	1	510	60	115-60-1	3.8	56	44	25	26	18-1/2	9/16	15
K211-7-00-4	1	510	80	115-60-1	3.8	68	44	25	35	18-1/2	9/16	16-1/2
K212-6-00-4	1	510	60	208-60-3	3.8	56	44	25	26	18-1/2	9/16	15
K212-7-00-4	1	510	80	208-60-3	3.8	68	44	25	35	18-1/2	9/16	16-1/2
K213-6-00-4	1	510	60	230/460-60-3	3.8	56	44	25	26	18-1/2	9/16	15
K213-7-00-4	1	510	80	230/460-60-3	3.8	68	44	25	35	18-1/2	9/16	16-1/2

SPECIFICATION FOR DUAL STAGE CLIMATE CONTROL COMPRESSORS

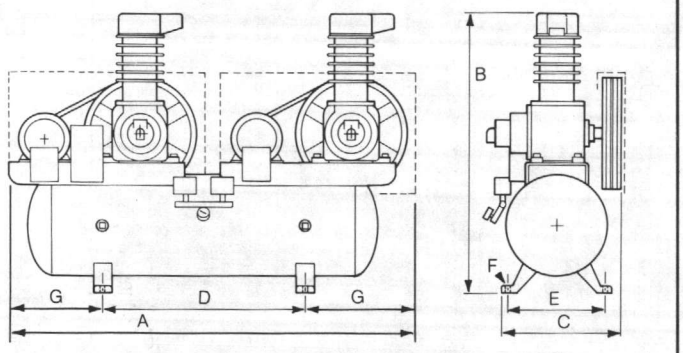

STANDARD EQUIPMENT

- Totally enclosed metal belt guard
- Cast iron compressor pump
- GE or equivalent motors
- Centrifugal loadless start
- Intake air filter — muffler
- Magnetic starter mounted and wired
- Multiple belt vee drive
- All air receivers ASME
- Intercooler and aftercooler
- Pressure switch, gauge, safety valve and check valve
- Tank drain and outlet valve
- All electrical wiring enclosed in flexible metal cable

Model No.	HP	RPM	Tank Size (Gal.)	Motor Data	CFM @ 100 PSI	Dimensions (Inches)						
						A	B	C	D	E	F	G
TWO STAGE SIMPLEX												
K114-6-00-4	1-1/2	520	60	208-60-3	7.1	47	39-1/2	25	26	18-1/2	9/16	10-1/2
K114-7-00-4	1-1/2	520	80	208-60-3	7.1	63	39-1/2	25	35	18-1/2	9/16	14
K115-6-00-4	1-1/2	520	60	230/460-60-3	7.1	47	39-1/2	25	26	18-1/2	9/16	10-1/2
K115-7-00-4	1-1/2	520	80	230/460-60-3	7.1	63	39-1/2	25	35	18-1/2	9/16	14
K116-6-00-4	2	570	60	208-60-3	7.6	47	39-1/2	25	26	18-1/2	9/16	10-1/2
K116-7-00-4	2	570	80	208-60-3	7.6	63	39-1/2	25	35	18-1/2	9/16	14
K117-6-00-4	2	570	60	230/460-60-3	7.6	47	39-1/2	25	26	18-1/2	9/16	10-1/2
K117-7-00-4	2	570	80	230/460-60-3	7.6	63	39-1/2	25	35	18-1/2	9/16	14
K118-6-00-4	3	490	60	208-60-3	11.1	47	42-3/4	25	26	18-1/2	9/16	10-1/2
K118-7-00-4	3	490	80	208-60-3	11.1	63	42-3/4	25	35	18-1/2	9/16	14
K119-6-00-4	3	490	60	230/460-60-3	11.1	47	42-3/4	25	26	18-1/2	9/16	10-1/2
K119-7-00-4	3	490	80	230/460-60-3	11.1	63	42-3/4	25	35	18-1/2	9/16	14
K122-6-00-4	5	560	60	208-60-3	17.5	47	47-1/2	25	26	18-1/2	9/16	10-1/2
K122-7-00-4	5	560	80	208-60-3	17.5	63	47-1/2	25	35	18-1/2	9/16	14
K122-8-00-4	5	560	120	208-60-3	17.5	69	47-1/2	25	42	21	9/16	13-1/2
K123-6-00-4	5	560	60	230/460-60-3	17.5	47	47-1/2	25	26	18-1/2	9/16	10-1/2
K123-7-00-4	5	560	80	230/460-60-3	17.5	63	47-1/2	25	35	18-1/2	9/16	14
K123-8-00-4	5	560	120	230/460-60-3	17.5	69	47-1/2	25	42	21	9/16	13-1/2
K126-7-00-4	7-1/2	618	80	208-60-3	29.9	63	45-1/2	25	35	18-1/2	9/16	14
K126-8-00-4	7-1/2	618	120	208-60-3	29.9	69	51-1/2	34	42	21	9/16	13-1/2
K127-7-00-4	7-1/2	618	80	230/460-60-3	29.9	63	45-1/2	25	35	18-1/2	9/16	14
K127-8-00-4	7-1/2	618	120	230/460-60-3	29.9	69	51-1/2	34	42	21	9/16	13-1/2
K130-7-00-4	10	710	80	208-60-3	35.4	63	45-1/2	25	35	18-1/2	9/16	14
K130-8-00-4	10	710	120	208-60-3	35.4	69	51-1/2	34	42	21	9/16	13-1/2
K131-7-00-4	10	710	80	230/460-60-3	35.4	63	45-1/2	25	35	18-1/2	9/16	14
K131-8-00-4	10	710	120	230/460-60-3	35.4	69	51-1/2	34	42	21	9/16	13-1/2
K134-8-00-4	15	525	120	208-60-3	57.6	69	65	34	42	21	9/16	13-1/2
K134-9-00-4	15	525	240	208-60-3	57.6	84	70	45	45	27	1	19-1/2
K135-8-00-4	15	525	120	230/460-60-3	57.6	69	65	34	42	21	9/16	13-1/2
K135-9-00-4	15	525	240	230/460-60-3	57.6	84	70	45	45	27	1	19-1/2
K138-8-00-4	20	672	120	208-60-3	73.8	69	65	34	42	21	9/16	13-1/2
K138-9-00-4	20	672	240	208-60-3	73.8	84	70	45	45	27	1	19-1/2
K139-8-00-4	20	672	120	230/460-60-3	73.8	69	65	34	42	21	9/16	13-1/2
K139-9-00-4	20	672	240	230/460-60-3	73.8	84	70	45	45	27	1	19-1/2
K142-8-00-4	25	778	120	208-60-3	83.0	69	65	34	42	21	9/16	13-1/2
K142-9-00-4	25	778	240	208-60-3	83.0	84	70	45	45	27	1	19-1/2
K143-8-00-4	25	778	120	230/460-60-3	83.0	69	65	34	42	21	9/16	13-1/2
K143-9-00-4	25	778	240	230/460-60-3	83.0	84	70	45	45	27	1	19-1/2

Barber-Colman Company
ENVIRONMENTAL CONTROLS DIVISION

1354 Clifford Avenue
P.O. Box 2940
Loves Park, IL U.S.A. 61132-2940

Model No.	HP	RPM	Tank Size (Gal.)	Motor Data	CFM @ 100 PSI	Dimensions (Inches)						
						A	B	C	D	E	F	G
TWO STAGE DUPLEX												
K214-6-00-4	1-1/2	520	60	208-60-3	7.1	56	44	25	26	18-1/2	9/16	15
K214-7-00-4	1-1/2	520	80	208-60-3	7.1	68	44	25	35	18-1/2	9/16	16-1/2
K215-6-00-4	1-1/2	520	60	230/460-60-3	7.1	56	44	25	26	18-1/2	9/16	15
K215-7-00-4	1-1/2	520	80	230/460-60-3	7.1	68	44	25	35	18-1/2	9/16	16-1/2
K216-6-00-4	2	570	60	208-60-3	7.6	56	44	25	26	18-1/2	9/16	15
K216-7-00-4	2	570	80	208-60-3	7.6	68	44	25	35	18-1/2	9/16	16-1/2
K217-6-00-4	2	570	60	230/460-60-3	7.6	56	44	25	26	18-1/2	9/16	15
K217-7-00-4	2	570	80	230/460-60-3	7.6	68	44	25	35	18-1/2	9/16	16-1/2
K218-6-00-4	3	490	60	208-60-3	11.1	76	48	25	26	18-1/2	9/16	25
K218-7-00-4	3	490	80	208-60-3	11.1	76	48	25	35	18-1/2	9/16	20-1/2
K219-6-00-4	3	490	60	230/460-60-3	11.1	76	48	25	26	18-1/2	9/16	25
K219-7-00-4	3	490	80	230/460-60-3	11.1	76	48	25	35	18-1/2	9/16	20-1/2
K222-6-00-4	5	560	60	208-60-3	17.5	76	51	25	26	18-1/2	9/16	25
K222-7-00-4	5	560	80	208-60-3	17.5	76	51	25	35	18-1/2	9/16	20-1/2
K222-8-00-4	5	560	120	208-60-3	17.5	80	58	34	42	21	9/16	19
K223-6-00-4	5	560	60	230/460-60-3	17.5	76	51	25	26	18-1/2	9/16	25
K223-7-00-4	5	560	80	230/460-60-3	17.5	76	51	25	35	18-1/2	9/16	20-1/2
K223-8-00-4	5	560	120	230/460-60-3	17.5	80	58	34	42	21	9/16	19
K226-7-00-4	7-1/2	618	80	208-60-3	29.9	80	53	25	35	18-1/2	9/16	22-1/2
K226-8-00-4	7-1/2	618	120	208-60-3	29.9	80	57	34	42	21	9/16	19
K227-7-00-4	7-1/2	618	80	230/460-60-3	29.9	80	53	25	35	18-1/2	9/16	22-1/2
K227-8-00-4	7-1/2	618	120	230/460-60-3	29.9	80	57	34	42	21	9/16	19
K230-7-00-4	10	710	80	208-60-3	35.4	80	53	25	35	18-1/2	9/16	22-1/2
K230-8-00-4	10	710	120	208-60-3	35.4	80	57	34	42	21	9/16	19
K231-7-00-4	10	710	80	230/460-60-3	35.4	80	53	25	35	18-1/2	9/16	22-1/2
K231-8-00-4	10	710	120	230/460-60-3	35.4	80	57	34	42	21	9/16	19
K234-8-00-4	15	525	120	208-60-3	57.6	112	68	34	42	21	9/16	35
K234-9-00-4	15	525	240	208-60-3	57.6	112	68	45	45	27	1	33-1/2
K235-8-00-4	15	525	120	230/460-60-3	57.6	112	68	34	42	21	9/16	35
K235-9-00-4	15	525	240	230/460-60-3	57.6	112	68	45	45	27	1	33-1/2
K238-8-00-4	20	672	120	208-60-3	73.8	112	68	34	42	21	9/16	35
K238-9-00-4	20	672	240	208-60-3	73.8	112	68	45	45	27	1	33-1/2
K239-8-00-4	20	672	120	230/460-60-3	73.8	112	68	34	42	21	9/16	35
K239-9-00-4	20	672	240	230/460-60-3	73.8	112	68	45	45	27	1	33-1/2
K242-8-00-4	25	778	120	208-60-3	83.0	112	68	34	42	21	9/16	35
K242-9-00-4	25	778	240	208-60-3	83.0	112	68	45	45	27	1	33-1/2
K243-8-00-4	25	778	120	230/460-60-3	83.0	112	68	34	42	21	9/16	35
K243-9-00-4	25	778	240	230/460-60-3	83.0	112	68	45	45	27	1	33-1/2

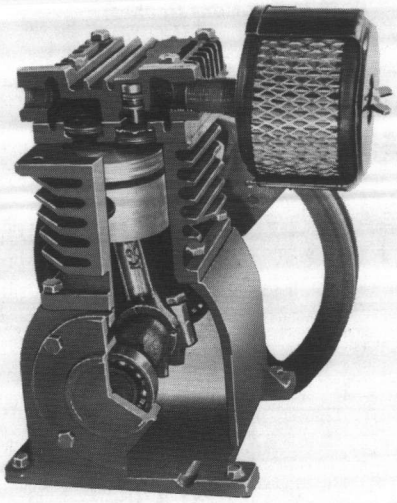

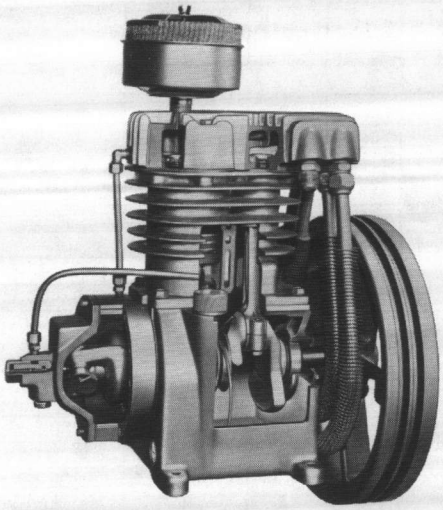

SINGLE STAGE

VALVE — Large area quick acting, hardened and ground swedish steel disc. Stainless steel spring. Cast iron seats for long life and accurate seating. No special tools required.

PISTON RINGS — Automotive type.

WRIST PIN — Hardened and ground.

PISTON — Precision machined alloy aluminum.

CONNECTING RODS — Alloy aluminum "H" section rods —extra large bearing surface.

CRANKCASE — Dust tight — enclosed.

MAIN BEARINGS — Oversize ground precision ball type —support both ends of crankshaft.

INTAKE UNLOADERS — Brass and stainless — built into head.

VALVE PLATE — One piece — complete exchange in minutes.

COMBINATION FILTER/MUFFLER — Highly efficient filtering of air plus noise reduction (F series — insert filter type).

COOLING FINS — Large area — on cast iron. Bored and honed cylinder.

FLYWHEEL — Fan type.

CASTING — Close-grain cast iron.

LUBRICATION — Automatic splash type — trouble free and positive action.

HI LEVEL OIL FILL — Cannot be "over filled".

OIL DRAIN — Easily accessible.

TWO STAGE

CRANKSHAFT — Counter balanced, with super-finished bearing surfaces.

CENTRIFUGAL UNLOADER — An efficient, durable device for pressure relief to insure no-load starting.

OIL GAUGE & FILLER — Oil level is quickly checked. Larger oil fill opening is located for easy, quick compressor lubrication.

COMBINATION FILTER-SILENCER — Highly efficient filtering of air and noise reduction.

MULTIPLE VALVES — High efficiency, wafer-type valves (with minimum of parts) designed for long service life.

CYLINDERS — Deep, thin fins to dissipate heat, precision bored and finished to a micro-surface.

FLYWHEEL — Fan-bladed type, statically balanced.

IMPROVED INTERCOOLERS — Larger radiating fins. Pressure drop reduced by higher air flow capacity.

MAIN BEARINGS — Tapered roller or ball bearings. Crankshaft supported at both ends.

LUBRICATION SYSTEM — Positive controlled splash feed oiling to every wearing surface.

CRANKCASE — Totally enclosed.

IMPROVED HEAD DESIGN — Gives higher efficiency. Large direct air passages permit free flow of air, reducing pressure drop; greater cooling in valve areas.

CASTINGS — Close-grain iron.

PISTONS — Precision ground.

WRIST PIN BEARINGS — Roller type to withstand greater bearing load.

Product Information

(EMGLO) Compressor Selection Chart

To determine compressor size:

1. Use the Compressor Sizing Work Sheet, F-17480, to find the number of equivalent units for all air consuming equipment in the system.
2. Select the compressor size from the table.

This table is based on the following formulas:

I. Compressor CFM Required = 3 × system CFM (from line second from bottom on F-17480).

II. Starts per hour = 60 ÷ cycle time (minutes).

III. $$\text{Cycle Time} = \frac{1.14 \times \text{Tank Size (gal.)} \times \text{Differen. (PSIG)}}{\text{System Units} \times \left(1 - \frac{\text{System CFM}}{\text{Compressor CFM}}\right)}$$

IV. $$\text{Run Time (minutes)} = \frac{\text{System CFM}}{\text{Compressor CFM}} \times \text{cycle time (minutes)}$$

V. $$\text{Off Time} = \left(1 - \frac{\text{System CFM}}{\text{Compressor CFM}}\right) \times \text{cycle time}$$

$$= \text{cycle time} - \text{run time}$$

Model	Tank Size	HP	CFM at 100 PSI	RPM	Units at 33%	Units at 50%	Starts Per Hour at 33%	Starts Per Hour at 50%	Off Time in Min. 1/3	Off Time in Min. 1/2
K105, 106 & 107 K205, 206 & 207	17	1/2	1.8	590	75	113	6.2	7.0	6.5	4.3
	30	1/2	1.8	590	75	113	3.5	4.0	11.4	7.6
	60	1/2	1.8	590	75	113	2.0	2.0	22.8	15.1
K108, 109 & 110 K208, 209 & 210	17	3/4	2.7	400	114	169	9.4	10.5	4.3	2.9
	30	3/4	2.7	400	114	169	5.4	5.9	7.5	5.1
	60	3/4	2.7	400	114	169	2.7	3.0	15.0	10.1
	80	3/4	2.7	400	114	169	2.0	2.2	20.0	13.5
K111, 112 & 113 K211, 212 & 213	30	1	3.8	510	158	238	7.5	8.4	5.4	3.6
	60	1	3.8	510	158	238	3.7	4.2	10.8	7.2
	80	1	3.8	510	158	238	2.8	2.3	14.4	9.6
K114 & 115 K214 & 215	60	1-1/2	7.1	520	295	444	6.9	7.8	5.8	3.9
	80	1-1/2	7.1	520	295	444	5.2	5.8	7.7	5.1
K116 & 117 K216 & 217	60	2	7.6	570	318	475	7.5	8.3	5.4	3.6
	80	2	7.6	570	318	475	5.6	6.3	7.2	4.8
K118 & 119 K218 & 219	60	3	11.1	490	472	706	10.9	12.1	3.6	2.4
	80	3	11.1	490	472	706	7.3	9.1	5.4	3.6
K122 & 123 K222 & 223	60	5	17.5	560	730	1094	10.7	12.0	3.7	2.5
	80	5	17.5	560	730	1094	8.0	9.0	5.0	3.3
	120	5	17.5	560	730	1094	5.4	6.0	7.5	5.0
K126 & 127 K226 & 227	80	7-1/2	29.9	618	1245	1869	13.7	15.4	2.9	2.0
	120	7-1/2	29.9	618	1245	1869	9.1	10.2	4.4	2.9
K130 & 131 K230 & 231	80	10	35.4	710	1474	2213	16.3	18.2	2.5	1.6
	120	10	35.4	710	1474	2213	10.8	12.1	3.7	2.5
K134 & 135 K234 & 235	120	15	57.6	525	2401	3600	17.6	19.7	3.1	1.5
	240	15	57.6	525	2401	3600	8.8	9.7	6.1	3.0
K138 & 139 K238 & 239	120	20	73.8	672	3075	4613	22.6	25.3	1.8	1.9
	240	20	73.8	672	3075	4613	11.3	12.6	3.6	2.4
K142 & 143 K242 & 243	120	25	83.0	778	3458	5188	25.4	28.4	1.6	1.1
	240	25	83.0	778	3458	5188	12.7	14.2	3.2	2.1

K1XX Simplex Models
K2XX Duplex Models

NOTE: Maximum recommended starts per hour for lubricated air compressors is 15. Service life of the compressor will be affected as the number of compressor starts per hour is increased.

Standard diff. pressure on 1/2 HP thru 3 HP units is 75 to 100 PSI.

Diff. pressure 40 PSI on all 5 HP above, 60 to 100 PSI pressure setting.

Barber-Colman Company
ENVIRONMENTAL CONTROLS DIVISION

1354 Clifford Avenue
P.O. Box 2940
Loves Park, IL U.S.A. 61132-2940

LITHO IN U.S.A. 11-83

General Instructions

Signal Adaptor for Dual Output Sequenced Control AD-8122, AD-8123, AD-8124

GENERAL INFORMATION

The Signal Adaptors for Dual Output Sequenced Control are used as add-ons to the output of standard System 8000 Solid State Controllers. The input voltage, as applied to the signal adaptor from the controller, is distributed to each of the two control output ramps. A controller output change of 1.5 volts will produce a 3 volt change in each of the outputs of the signal adaptor.

The two outputs make it possible to establish a temperature span between heating and cooling control from one controller setpoint. Proportional or two-position control is available from the adaptors depending on what System 8000 controlled device you are controlling with the 6–9 volt dc output.

FEATURES

Three models, AD-8122, two direct acting outputs (DA-DA); AD-8123, one direct and one reverse acting output (DA-RA); and AD-8124, one reverse and one direct acting output (RA-DA), are available. The AD-8122 (only) outputs have different operating sequences depending on whether the controller output is direct-acting or reverse-acting. AD-8123 and AD-8124 are for DA input only. See the Adaptor Control Outputs section.

The compact design permits mounting on the back of the TP-8101 thermostat, on a track mounting in a panel or separately. Wiring and system span setting is shown on the face of the adaptors. Color coding is compatible with Series 8000 devices. The two slope control output with adjustable span conforms with ASHRAE 90-75 Standards.

PERFORMANCE

Ambient operating temperature
18° to 60°C (0° to 140°F).

Ambient storage temperature
–40° to 71°C (–40° to 160°F).

Power supply input –12 MA @ 20 Vdc maximum ±2.

Input signal 2 to 15 Vdc as produced by System 8000 controllers or any 2 to 15 Vdc source.

Adaptor output signal Two outputs each producing a control signal of 5.5 to 9.5 Vdc as the controller signal changes from 6 to 9 Vdc.

Total system throttling range Determined by T.R. setting on controller times the span setting of the signal adaptor.

Deadband between adaptor outputs Equal to the total throttling range (T.R.) minus the T.R. of the controller.

Mounting dimensions 95 mm (3¾") high × 38 mm (1½") wide × 16 mm (⅝") deep.

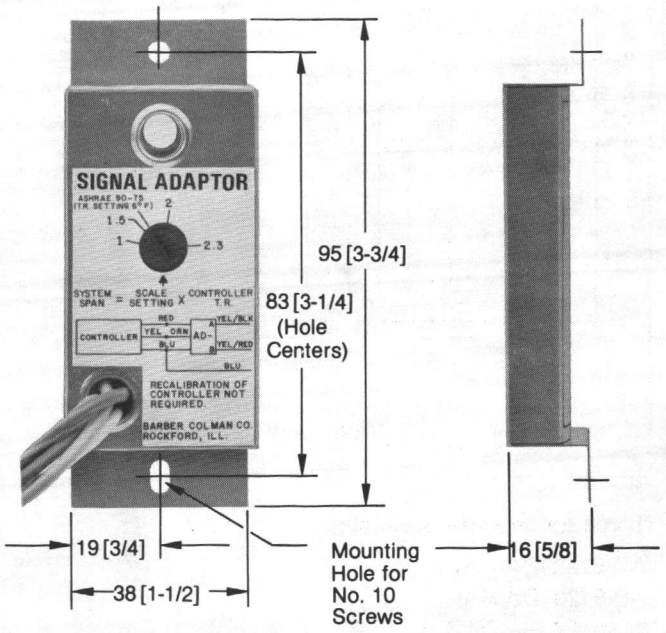

Dimensions in Millimeters with Inches followed in brackets

Figure 1

CONSTRUCTION AND USE

The adaptor with 228 mm (9 inch) pigtail leads is housed in a stainless steel mounting bracket suitable for attachment to the back of a TP-8101, screw or tape mounting to a panel, or snapping into a standard System 8000 plastic track.

The adaptors can be used with any System 8000 device which has a proportional 2–15 volt dc output. Some of the controllers that can be used with the AD-81XX Series are CP-8102, CC-8104 and TP-8101.

OPERATION

The two adaptor outputs operate in sequence. When the controller is at setpoint with a controller output of 7.5 volts, one output may be completely through its control range (depends on span setting) and the other not yet entering its control range. The second output will begin control as soon as the input voltage has covered the established span or deadband. The deadband or span between the output ramps is controlled by the controller T.R. setting and the adaptor span pot setting. It will not allow control action to begin until a programmed temperature differential has been met. Control span may be adjusted from 1 to 2.3 times controller T.R.; separation will be reasonably symmetrical about the center value. The total system throttling range between the full heating and full cooling control point is found by multiplying the controller throttling range by the span pot scale setting on the signal adaptor, i.e., T.R. on a TP-8101 is set at 3.4°C (6°F) times 1.7 on signal adaptor setting for (ASHRAE 90-75) to = 5.5°C (10°F). System span would be 5.5°C (10°F) less controller T.R. of 3.4°C (6°F) which equals 2.2°C (4°F) span or deadband.

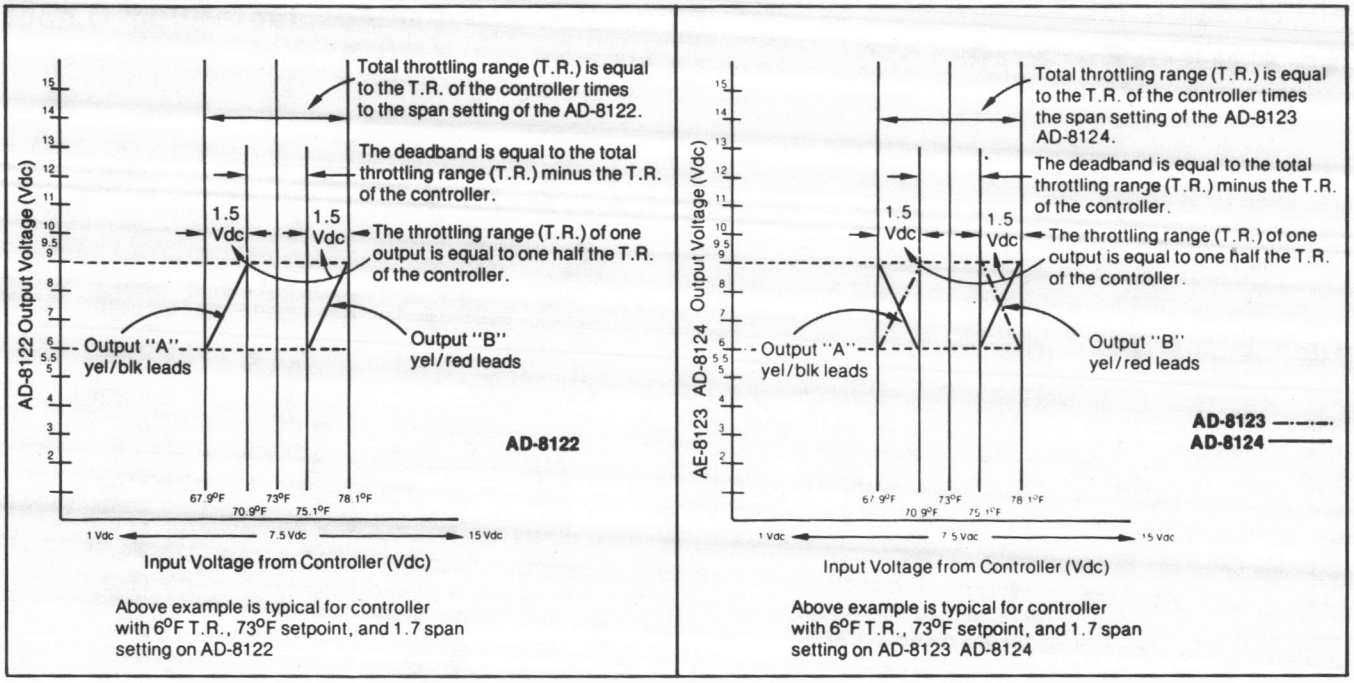

Three models are available:

AD-8122 (DA-DA)
AD-8123 (DA-RA)
AD-8124 (RA-DA)

NOTE:

1. A DA output is direct acting with respect to a Direct Acting input voltage.
2. A RA output is reverse acting with respect to a Direct Acting input voltage.

A wiring schematic is shown on the face of the signal adaptor.

Color coding is compatible with System 8000 devices.

Blue is common.

Red is +20 Vdc power supply.

Yellow is output (two separate wires): output A — yellow with a black stripe; output B — yellow with a red stripe.

Orange is input to the signal adaptor and is connected to the yellow wire of a TP-8101 or to the output (OP1) of a controller.

Typical Wiring Connections

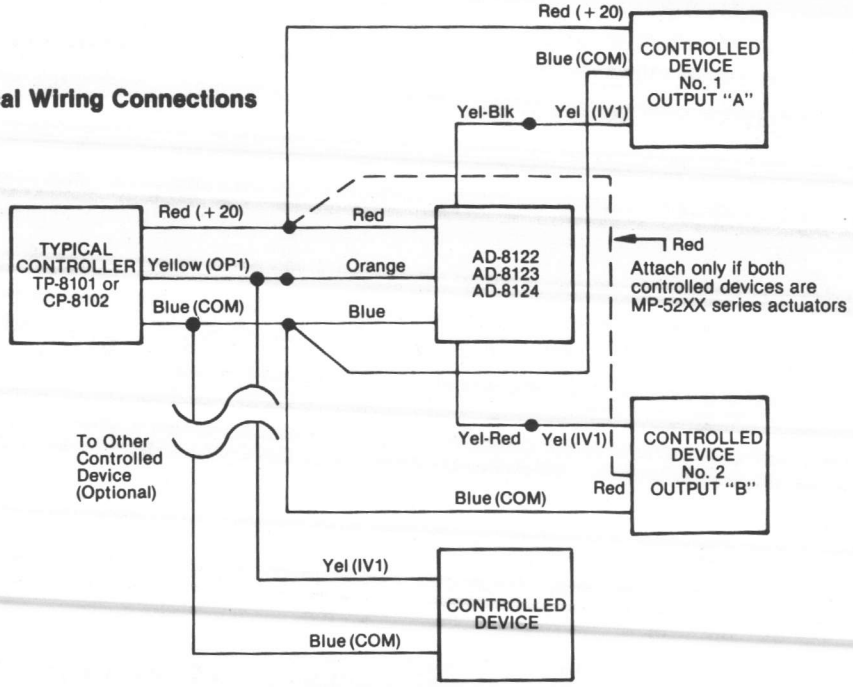

AD-8122, AD-8123, AD-8124 Field Wiring Diagram

ADAPTOR CONTROL OUTPUTS

The outputs action shown for all three signal adaptors is based on having a direct acting input from the controller. One adaptor AD-8122 (DA-DA) can be used with a reverse-acting controller input to obtain a reverse action output on both adaptor outputs. When using a reverse action input the "A" and "B" outputs of the adaptor will change authority positions, i.e., "A" output is first energized with direct action input and "B" output is first energized with reverse action input.

NOTE: AD-8123 and AD-8124 can be used only with direct acting controller input.

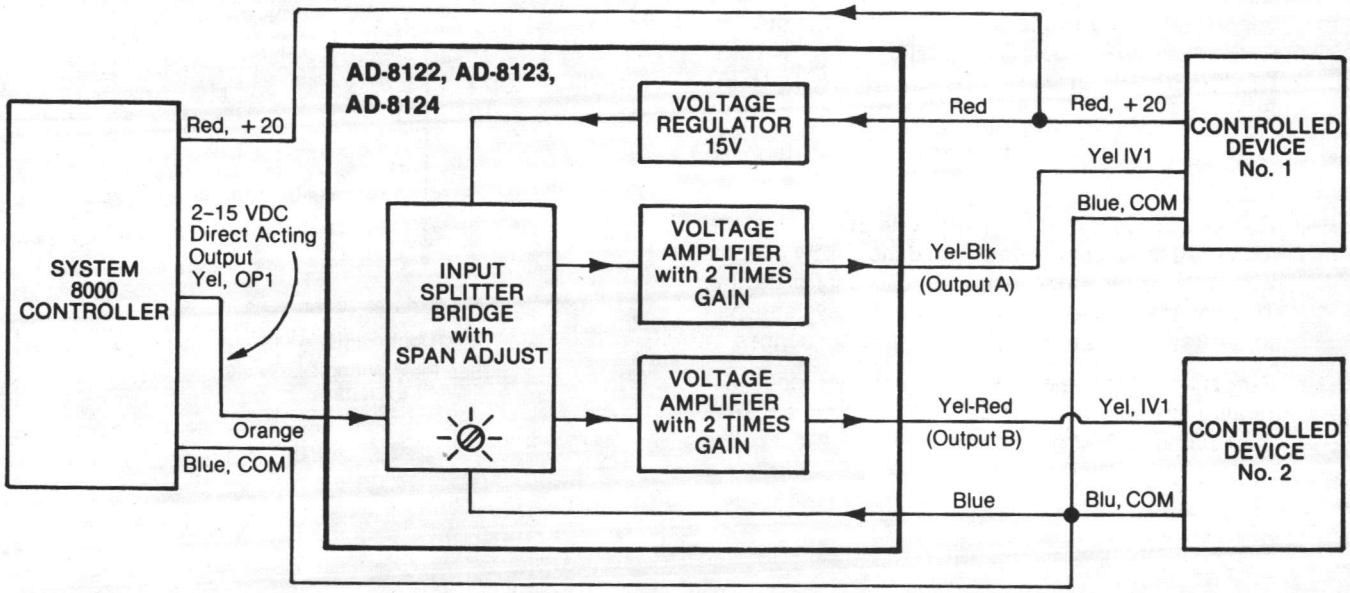

Basic System and Adaptor Block Diagram

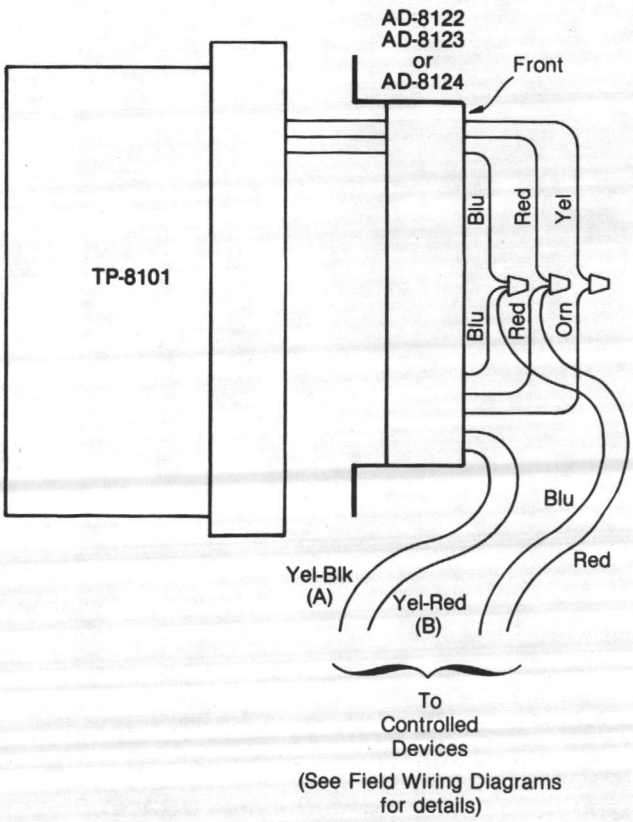

MOUNTING AND WIRING TO TP-8101

1. Mounting on TP-8101

Push the three wires of the TP-8101 through the round hole in the adaptor from the back to the front. (See picture.)

2. Wiring to TP-8101

a. Connect the blue wire from the TP-8101, the blue wire from the adaptor and the blue wires from the controlled devices together.

b. Connect the red wire from the TP-8101 to the red wire from the adaptor and the red wire from one of the controlled devices together. (THE RED WIRE ON THE OTHER CONTROLLED DEVICE(S) SHOULD BE TAPED IF NOT USED ELSEWHERE.) Connect all red wires if controlled device is Series MP-52XX.

c. Connect orange wire from adaptor to yellow wire from TP-8101.

d. Connect the yellow adaptor wire with the black stripe (output A) to its control device and the yellow adaptor wire with the red stripe (output B) to its control device. This completes system connections. Set system span to desired setting and check operating sequences.

e. Except for T.R. selection, the thermostat does not require special or further calibration simply because this adaptor is being used.

TRACK MOUNTING AND WIRING TO OTHER SERIES 8000 DEVICES

1. Connecting to Other 8000 Series Devices

Snap the signal adaptor into plastic track or mount with screw holes, #10 screws.

2. Wiring to Other Devices

a. Connect the blue adaptor wire and blue wires from controlled devices to controller common (COM).

b. Connect the red wire of adaptor and red wire from one controlled device to the +20 terminal on controller. (THE RED WIRE ON THE OTHER CONTROLLED DEVICE(S) SHOULD BE TAPED IF NOT USED ELSEWHERE.)

c. Connect the orange wire from adaptor to OP1 terminal of controller.

d. Connect the yellow adaptor wire with the black stripe (output A) to its control device and the yellow adaptor wire with the red stripe (output B) to its control device. This completes system connections. Set system span to desired setting and check operating sequences.

e. Except for T.R. selection, the controller does not require special or further calibration simply because this adaptor is being used.

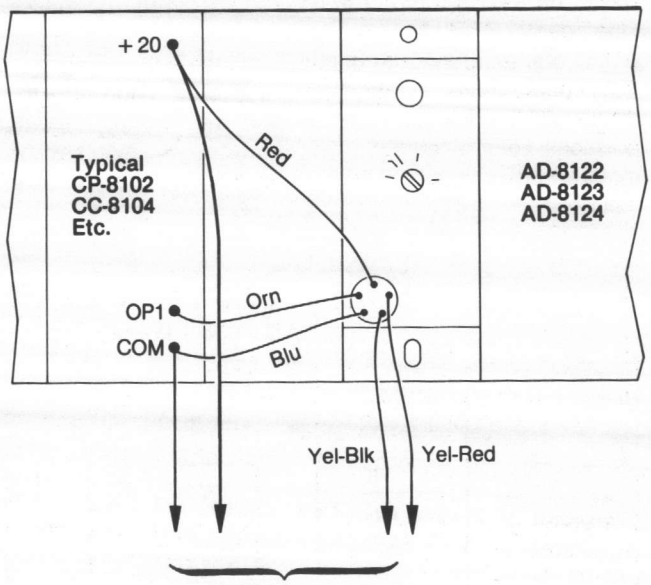

To Controlled Devices
(See Field Wiring Diagrams for details)

Barber-Colman Company
CONTROLS DIVISION
1300 Rock Street, Rockford, Illinois, U.S.A., 61101

F-16770 BK

LITHO IN U.S.A.

VALVES PNEUMATIC — 2-WAY & 3-WAY, BUTTERFLY

TO SELECT A VALVE BODY & PORT CODE

APPLICATION		Chilled or Hot Water; 30 psig Steam		Chilled or Hot Water	
FITTING		Flangeless Wafer – Flange (125/150 ASA)		Flangeless Wafer**	
		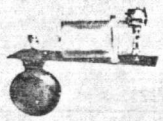			
Size		2" - 24"	2" - 12"	2" - 24"	2" - 12"
Part Number		VB-606-0-2-P	VB-616-0-2-P	VB-666-0-2-P	VB-676-0-2-P
Flow Type		Equal %	Equal %	Mixing or Diverting	Mixing or Diverting
Material	Body	Iron	Iron	Iron	Iron
	Seat	2% Leakage	Replaceable EPT rubber liner	2% Leakage	Replaceable EPT rubber liner
	Stem	Stn. Steel	Stn. Steel	Stn. Steel	Stn. Steel
	Packing	Teflon Impregnated Asbestos	"O" Ring	Teflon Impregnated Asbestos	"O" Ring
	Disc	Iron	Nickel plated ductile iron	Iron	Nickel plated ductile iron
STEAM					
Pressure (psig)	Static	150	150	—	—
	Inlet	35	30	—	—
	Recommended Differential	See close-off pressure rating tables on following page			
Fluid Temperature °F (°C)	Maximum	281° (138°)	275° (135°)	—	—
WATER					
Pressure (psig)	Static	150	150	125	125
	Recommended Differential	See close-off pressure rating tables on following page			
Fluid Temperature °F (°C)	Minimum	40° (4°)	40° (4°)	40° (4°)	40° (4°)
	Maximum	350° (177°)	275° (135°)	350° (177°)	275° (135°)
P Code	Valve Size	C_V*			
-11	2"	75	45	75	45
-12	2-1/2"	115	70	115	70
-13	3"	170	100	170	100
-14	4"	275	200	275	200
-15	5"	440	425	440	425
-16	6"	640	680	640	680
-17	8"	1150	1125	1150	1125
-18	10"	1850	1750	1850	1750
-19	12"	2650	2600	2650	2600
-20	14"	3400		3400	
-21	16"	4500		4500	
-22	18"	5400		5400	
-23	20"	7000		7000	
-24	24"	10,000		10,000	

*Based on 60° opening for optimum control characteristics

**2 flangeless wafers with 125 lb /150 lb ASA flanges mounted on 125 lb cast iron tee. See dimensional drawings

V-5

VALVES PNEUMATIC — 2-WAY & 3-WAY, BUTTERFLY CLOSE-OFF PRESSURE RATINGS AND ASSEMBLIES

TO SELECT AN ACTUATOR SERIES & COMPLETE VALVE ASSEMBLY

			ACTUATORS			
			MK4-7121		DUAL MK4-7121	
Part Number	P Code	Size	Close Off 0° ††	Max. Rec. Diff. Pressure Full Open (60°)	Close Off 0° ††	Max. Rec. Diff. Pressure Full Open (60°)
VB-606-0-2-P	-11	2"	150	44 †		
	-12	2-1/2"	150	38 †		
	-13	3"	150	41 †		
	-14	4"	125	47 †		
	-15	5"	100	45 †		
	-16	6"	80	45 †		
	-17	8"	73	41 †	90	41 †
	-18	10"	32	28	64	40 †
	-19	12"	24	18	47	35 †
	-20	14"	15	13	30	25
	-21	16"	12	8	24.3	17
	-22	18"			15.6	11
	-23	20			12.1	.85
	-24	24"			7.3	.5
VB-616-0-2-P	-11	2"	50*	122 †		
	-12	2-1/2"	50*	103 †		
	-13	3"	50*	120 †		
	-14	4"	50*	885 †		
	-15	5"	50*	48 †	50*	48 †
	-16	6"			50*	39 †
	-17	8"			50*	43 †
	-18	10"			20*	20
	-19	12"			20*	.5
VB-666-0-2-P	-11	2"		44 †		
	-12	2-1/2"		38 †		
	-13	3"		41 †		
	-14	4"		47 †		
	-15	5"		45 †		
	-16	6"		45 †		
	-17	8"		41 †		41 †
	-18	10"		25		40 †
	-19	18"		16		32
	-20	14"		11		22
	-21	16"		7		15
	-22	18"				10
	-23	20"				8
	-24	24"				4
VB-676-0-2-P	-11	2"	*	122 †		
	-12	2-1/2"	*	103 †		
	-13	3"	*	12 †		
	-14	4"	*	885 †		
	-15	5"	*	48 †	*	48 †
	-16	6"			*	39 †
	-17	8"			*	21
	-18	10"			*	4
	-19	18"			*	2
Body, Linkage & Actuator (Factory Assembled)			VK-6064-221-2-P		VK-6064-321-2-P	
			VK-6164-221-2-P		VK-6164-321-2-P	
			VK-6664-221-2-P		VK-6664-321-2-P	
			VK-6764-221-2-P		VK-6754-321-2-P	

Note: Ratings based on 20 PSI supply air pressure

*Bubble tight

† Based on 15 ft./sec. fluid velocity. Contact factory concerning higher rating

†† For steam applications close-off ratings are 35 PSI maximum unless listed close-off is lower

PNEUMATIC

Body Pattern: 1/2" to 1-1/2" Globe Screwed, 1" to 1-1/2", 300 lb. Globe Flanged
Flow Type: Equal Percentage
Body Material: Steel
Seat Material: Stainless Steel
Stem Material: Stainless Steel
Plug Material: Stainless Steel
Disc: None
Stem Packing: Teflon "V" Rings
Max. Operating Press.—Steam: 400 psig (2758 kPa) G.S., 300 psig (2069 kPa) G.F.
Max. Operating Press.—Water:600 psig (4137 kPa) G.S., 300 psig (2069 kPa) G.F.
Recommended Diff. Press.—Steam: 100 psig (690 kPa)
Recommended Diff. Press.—Water: 100 psig (690 kPa)
Fluid Temps.—Steam: 446°F (230°C) G.S., 420°F (216°C) G.F.
Fluid Temps.—Water: 450°F (232°C) G.S., 400°F (204°C) G.F.
Cv Ratings:** .95, 1.8, 2.5, 4.0, 7.4, 9.0, 17.4, 33.4
Dimensions: See pages 42-46

** Kv = Cv/1.167

VP-2224 Proportional, Spring Return or Non-Spring Return, 1/2" to 1-1/2" Valves

Used for proportional control of high temperature water or high pressure steam.

VP-2224 ☐

Flow Type: Diverting
Body Material: Brass
Max. Operating Press.—Water: 200 psig (1379 kPa)
Maximum Closeoff: 10 psi (69 kPa)
Fluid Temps: 200°F (93°C) Maximum
Cv Rating:** 3.8
Dimensions: See page 44

** Kv = Cv/1.167

VA-3203 Two-Position, SAE Flared, 5/8" O.D. Diverting Valves

Used for two-position diverting control of supply water for fan-coil units, convectors, and base board radiation. Manual opener.

VA-3203 ☐

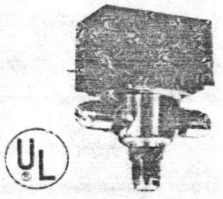

Flow Type: Diverting
Body Material: Brass
Max. Operating Press.—Water: 200 psig (1379 kPa)
Maximum Closeoff: 10 psi (69 kPa)
Fluid Temps: 200°F (93°C) Maximum
Cv Rating:** 3.8
Dimensions: See page 44

** Kv = Cv/1.167

VA-3403 Two-Position, Diverting, 5/8" or 7/8" O.D. Sweat Valves

Used for two-position diverting control of supply water for fan-coil units, convectors, and base board radiation. Manual opener.

VA-3403 ☐

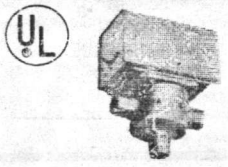

Sizes: 2" to 24"
Body Pattern: Flangeless Wafer with 125 lb/150 lb. ASA Flange Rating
Flow Type: Equal Percentage
Body Material: Iron
Stem Material: Stainless Steel
Disc: Iron
Stem Packing: Teflon Impregnated Asbestos
Max. Operating Press.—Steam: 35 psig (241 kPa)
Max. Operating Press.—Water: 150 psig (1034 kPa)
Fluid Temps.—Steam: 281°F (138°C) Maximum
Fluid Temps.—Water: 40 thru 350°F (4 thru 177°C)*
Cv Ratings:** 75, 115, 170, 275, 440, 640, 1150, 1850, 2650, 3400, 4500, 5400, 7000, 10,000
Dimensions: See page 47

* Minimum temperature for HVAC glycol solutions — 20F (-29C)
** Kv = Cv/1.167

VC-6064, VC-6065 Two-Position, Two-Way, Metal Seat, 2" to 24" Butterfly Valves

VP-6064, VP-6065 Proportional, Two-Way, Metal Seat, 2" to 24" Butterfly Valves

Used for control of steam or water where minor leakage is permissible.

VC-6064 ☐
VC-6065 ☐
VP-6064 ☐
VP-6065 ☐

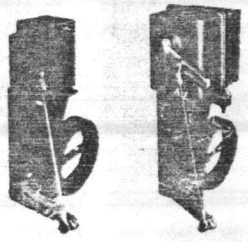

VC,VP-6064 VC,VP-6085

VALVES ELECTRIC — ZONE, DIVERTING

TO SELECT A VALVE BODY

APPLICATION		HOT OR CHILLED WATER		
Fitting		SAE FLARED	SWEAT	SWEAT
Complete Assembly		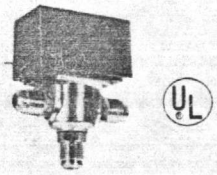	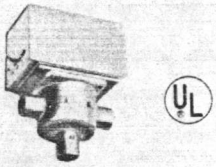	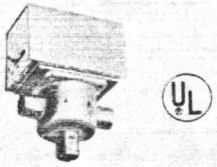
Note: XXX (See Actuator Codes)		VA-3203-XXX-5-4	VA-3403-XXX-6-4	VA-3403-XXX-6-5
Size		5/8" O.D.	5/8" O.D.	7/8" O.D.
Flow Type		Two-Position	Two-Position	Two-Position
Material	Body	Brass	Brass	Brass
	Seat	Brass	Brass	Brass
	Stem	Stainless Steel	Stainless Steel	Stainless Steel
	Plug	E.P. Rubber	E.P. Rubber	E.P. Rubber
	Packing	"O" Ring	"O" Ring	"O" Ring
Flow Coefficient — Cv		3.8	3.8	3.8
Maximum Pressure (PSIG) °F (°C)				
Static		200	200	200
Close-Off		10	10	10
Ambient Rating °F (°C)				
Operating		40-200 (4-93)	40-200 (4-93)	40-200 (4-93)
Shipping		-40 to 200 (-40 to 93)	-40 to 200 (-40 to 93)	-40 to 200 (-40 to 93)
Maximum Water Temperature Without Auxiliary Switch	200°F (93°C)	200°F (93°C)	200°F (93°C)	200°F (93°C)
Maximum Water Temperature With Auxiliary Switch	200°F (93°C)	125°F (51°C)	125°F (51°C)	125°F (51°C)
	185°F (85°C)	185°F (85°C)	185°F (85°C)	185°F (85°C)

TO SELECT AN ACTUATOR CODE

ACTUATOR CODES

Input To Motor	Voltage 50/60 Hz	24	120	220-240
	Amp	.32	.07	.03
With Manual Opener	Without Auxiliary Switch	201	211	221
	With Auxiliary Switch*	202	212	222

Valve No.	Size	Dimensions Inches (mm)		
		A	B	C
VA-1203	5/8	4-1/2 (114)	2-1/8 (54)	—
VA-1403	5/8	3-1/8 (79)	1-9/16 (40)	—
VA-1403	7/8	3-3/4 (95)	1-7/8 (48)	—
VA-3203	5/8	4-1/4 (108)	2-1/8 (54)	2-1/4 (57)
VA-3403	5/8	3-1/8 (79)	1-9/16 (40)	1-9/16 (40)
VA-3403	7/8	3-3/4 (95)	1-7/8 (48)	2 (51)

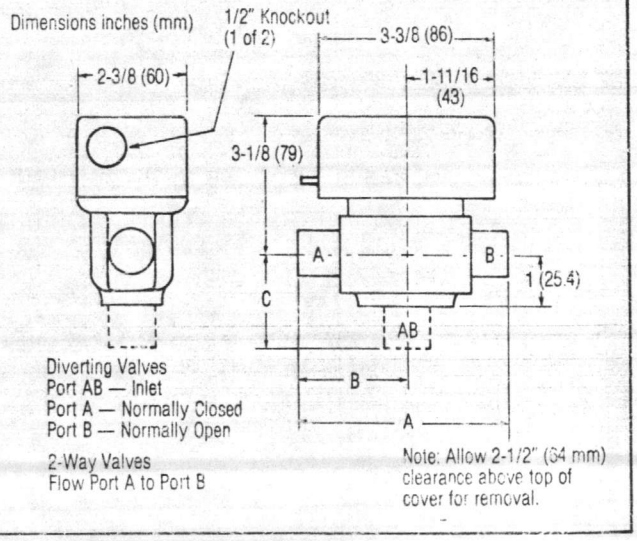

V-4

Body Pattern: 125 lb. Globe Flanged
Flow Type: Mixing
Body Material: Iron
Seat Material: Bronze
Stem Material: 316 Stainless Steel
Plug Material: Bronze
Disc: None
Stem Packing: Graphite
Max. Operating Press.—Steam: No Rating
Max. Operating Press.—Water: 125 psig (241 kPa)
Recommended Diff. Press.—Steam: No Rating
Recommended Diff. Press.—Water: 35 psig (241 kPa)
Fluid Temps.—Steam: No Rating
Fluid Temps.—Water: 40 thru 300°F (4 thru 149°C)*
Cv Ratings:** 74, 101, 170, 290, 390
Dimensions: See pages 44-46

* Minimum temperature for HVAC glycol solutions — 20F (-29C)
** Kv = Cv/1.167

† VC and VP-8044, VP-8045, VS-8043, (2-1/2 _thru 6") to be replaced by VC, VP, VS-9313

VC-8044 Two-Position, Non-Spring Return, 2-1/2" to 4" Mixing Valves — **VC-8044† ☐**

VP-8044 Proportional, Spring Return or Non-Spring Return, 2-1/2" to 6" Mixing Valves (Assembly for 5" and 6" Bodies not shown) — **VP-8044† ☐**

VP-8045 Proportional Non-Spring Return, 4" to 6" Mixing Valves — **VP-8045† ☐**

VS-8043 Electronic Proportional, Spring Return, 2-1/2" to 4" Mixing Valves — **VS-8043† ☐**

Used for control of liquids on mixing applications, air conditioning systems, and in hot water heating installations.

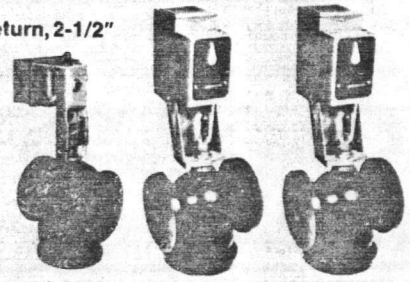

VS-8043 VP-8045 VP-8044 VC-8044

Body Pattern: 125 lb. Globe Flanged
Flow Type: Diverting
Body Material: Iron
Seat Material: Bronze
Stem Material: 316 Stainless Steel
Piston Material: Bronze
Piston Seal: Teflon Insert with Ethaylene Propylene "O" Ring
Disc: None
Stem Packing: Teflon Asbestos
Max. Operating Press.—Steam: No Rating
Max. Operating Press.—Water: 125 psig (862 kPa)
Recommended Diff. Press.—Steam: No Rating
Recommended Diff. Press.—Water: 35 psig (241 kPa)
Fluid Temps.—Steam: No Rating
Fluid Temps.—Water: 40 thru 300°F (4 thru 149°C)*
Cv Ratings:** 68, 85, 160, 195, 250
Dimensions: See pages 44-46

VP-8174 Proportional, Spring Return or Non-Spring Return, 2-1/2" to 6" Diverting Valves — **VP-8174† ☐**

VS-8173 Electronic Proportional, Spring Return, 2-1/2" to 3" Diverting Valves — **VS-8173† ☐**

Used for proportional control of liquids on diverting applications.

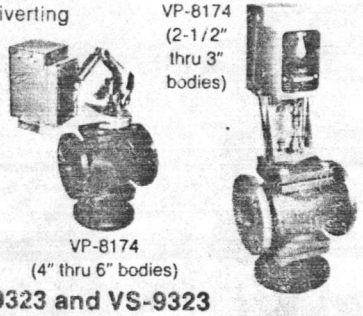

VP-8174 (2-1/2" thru 3" bodies)

* Minimum temperature for HVAC glycol solutions — 20F (-29C)
** Kv = Cv/1.167

VS-8173 VP-8174 (4" thru 6" bodies)

† VP-8174 (2-1/2 thru 6") to be replaced by VP-9323 and VS-9323

Flow Type: Equal Percentage
Body Material: Bronze
Seat Material: Bronze
Stem Material: 316 Stainless Steel
Plug Material: Brass
Disc: Composition
Stem Packing: Teflon Cone
Max. Operating Press.—Steam: 35 psig (241 kPa)
Max. Operating Press.—Water: 250 psig (1724 kPa)
Recommended Diff. Press.—Steam: 20 psig (138 kPa)
Recommended Diff. Press.—Water: 35 psig (241 kPa)
Fluid Temps.—Steam: 281°F (138°C) Maximum
Fluid Temps.—Water: 40 thru 281°F (4 thru 138°C)*
Cv Ratings:** .4, 1.3, 2.2, 3.3, 5.0, 6.2, 8.2, 10.5, 12.0, 15.0
Dimensions: See pages 42-43

V-4
LAUNDRY UH

VA-9211-200 Two-Position, Normally Open, Union End, 1/2" to 1-1/4" Valves — **VA-9211-200 ☐**

VS-9211-200 Electronic, Proportional, Normally Open, Union End, 1/2" to 1-1/4" Valves — **VS-9211-200 ☐**

Used for control of hot and chilled water or low pressure steam. Used primarily on fan-coil units, radiators, and small unitary air conditioners.

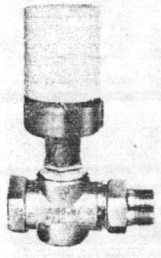

* Minimum temperature for HVAC glycol solutions — 20F (-29C)
** Kv = Cv/1.167

Flow Type: Equal Percentage
Body Material: Bronze
Seat Material: Bronze
Stem Material: 316 Stainless Steel
Plug Material: Brass
Disc: Composition
Stem Packing: Teflon Cone
Max. Operating Press.—Steam: 35 psig (241 kPa)
Max. Operating Press.—Water: 250 psig (1724 kPa)
Recommended Diff. Press.—Steam: 20 psig (138 kPa)
Recommended Diff. Press.—Water: 35 psig (241 kPa)
Fluid Temps.—Steam: 281°F (138°C) Maximum
Fluid Temps.—Water: 40 thru 281°F (4 thru 138°C)*
Cv Ratings:** .4, 1.3, 2.2, 3.3
Dimensions: See pages 42-43

VA-9212-200 Two-Position, Normally Open, SAE Flared, 5/8" O.D. Valves — **VA-9212-200 ☐**

VS-9212-200 Electronic, Proportional, Normally Open, SAE Flared, 5/8" Valves — **VS-9212-200 ☐**

Used for control of hot and chilled water or low pressure steam. Used primarily on fan-coil units, radiators, and small unitary air conditioners.

* Minimum temperature for HVAC glycol solutions — 20F (-29C)
** Kv = Cv/1.167

ELECTRIC

VALVES ELECTRIC — 2-WAY ASSEMBLIES & TEMPERATURE RATINGS

V-4

	ACTUATORS					
	Series 200	Series 300	Series 400	Series 460	Series 900	Series 950
	(MA-5200)	(MA, MF, MU-Spring Return)	(MC, MU, MF-Non-Spring Return)		(MF-9750)	(MF-9810)

TO SELECT A LINKAGE

Part Number		LINKAGE					
VB-9000, VB-111	1/2"—1-1/4"	AV-600	AV-391	AV-393			
	1-1/2"—2"		AV-392	AV-394			
VB-202	2-1/2"—4"		AV-329	AV-330		Not Avail. Separately	
	5"—6"				AV-352	Not Avail. Separately	Not Avail. Separately
VB-222	Style A		AV-347	AV-347-10			
	Style B		AV-347-20	AV-347-30			

TO SELECT AN ASSEMBLED BODY & LINKAGE

Body & Linkage (Factory Assembled)	VB-111-600-3-P VB-9211-200-4-P VB-9212-200-4-P VB-9213-200-4-P VB-9221-200-4-P VB-9222-200-4-P VB-9223-200-4-P VB-9253-200-4-P VB-9263-200-4-P VB-9273-200-4-P VB-9283-200-4-P					

TO SELECT A COMPLETE VALVE ASSEMBLY

V-4

	STEM UP OPEN (NON-SPRING RETURN)					
			VC-2024-1XX-2-P VP-2024-1XX-2-P VU-2024-1XX-2-P VP-2224-1XX-X-P VC-9213-4XX-4-P VP-9213-4XX-4-P VU-9213-40X-4-P VC-9253-4XX-4-P VP-9253-4XX-4-P VU-9253-40X-4-P VC-9273-4XX-4-P VP-9273-4XX-4-P VU-9273-40X-4-P	VC-2024-1XX-2-P VP-2024-1XX-2-P	VP-2025-9XX-2-P	VP-2025-9XX-2-P
	NORMALLY OPEN (SPRING RETURN)					
Body, Linkage and Actuator (Factory Assembled)*	VA-1112-8XX-3-P VA-9211-2XX-4-P VA-9212-2XX-4-P VA-9213-2XX-4-P VA-9253-2XX-4-P VA-9273-2XX-4-P	VP-2024-15X-2-P VP-2224-15X-X-P VA-9213-30X-4-P VP-9213-3XX-4-P VU-9213-3XX-4-P VA-9253-30X-4-P VP-9253-3XX-4-P VU-9253-3XX-4-P VA-9273-30X-4-P VP-9273-3XX-4-P VU-9273-3XX-4-P				
NOTE. For specific Actuator Assembly Codes see following pages.	NORMALLY CLOSED (SPRING RETURN)					
	VA-9221-2XX-4-P VA-9222-2XX-4-P VA-9223-2XX-4-P VA-9263-2XX-4-P VA-9283-2XX-4-P	VP-2024-15X-2-P VU-2024-15X-2-P VP-2224-15X-X-P VA-9213-31X-4-P VP-9213-3XX-4-P VU-9213-30X-4-P VA-9253-31X-4-P VP-9253-3XX-4-P VU-9253-30X-4-P VA-9273-31X-4-P VP-9273-3XX-4-F VU-9273-30X-4-F				

		TEMPERATURES °F (°C)					
Maximum Ambient		140° (60°)	136° (57°)	136° (57°)	136° (57°)	130° (54°)	130° (54°)
Resultant Fluid		200° (93°)	260° (126°)	260° (126°)	260° (126°)	260° (126°)	260° (126°)
VB-111-0-3-P	Max. Fluid	281° (138°)					
	Result. Ambient	115° (46°)					
VB-202-0-4-P VB-9213-0-4-P VB-9223-0-2-P	Max. Fluid	281° (138°)	281° (138°)	281° (138°)	281° (138°)	281° (138°)	281° (138°)
	Result. Ambient	115° (46°)	125° (52°)	125° (52°)	125° (52°)	125° (52°)	125° (52°)
VB-222-0-1-P VB-222-0-2-P	Max. Fluid		450° (232°)	450° (232°)			
	Result. Ambient		80° (27°)	80° (27°)			
VB-9273-0-4-P VB-9283-0-4-P	Max. Fluid	366° (185°)	366° (185°)	366° (185°)			
	Result. Ambient	90° (32°)	100° (38°)	100° (38°)			
VB-9211-0-4-P VB-9212-0-4-P VB-9221-0-4-P VB-9222-0-4-P	Max. Fluid	261° (138°)					
	Result. Ambient	115° (46°)					
VB-9253-0-4-P VB-9263-0-4-P	Max. Fluid	340° (171°)	340° (171°)	340° (171°)			
	Result. Ambient	100° (38°)	100° (38°)	100° (38°)			

*NOTE: Factory assemblies are not available for two position applications using reduced port valve bodies

CONTINUED ON NEXT PAGE

VALVES PNEUMATIC — 3-WAY CLOSE-OFF PRESSURE RATINGS & ASSEMBLIES

V-2, V-6

TO SELECT AN ACTUATOR SERIES

			ACTUATORS																					
			Series 200										Series 300											
													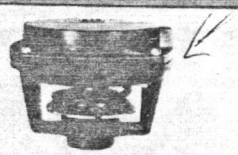											
			MK 2690										MK 4600										MK 4621-422	
Spring Range (psig)			3-7				5-10				8-13		3-6				5-10				10-13		10-11.25	
CLOSE-OFF PRESSURE RATING **																								
Supply Air Pressure (psig)			15		20		15		20		15		20		15		20		15		20		15	
Stem Position***			SU	SD	SU	SD	SU	SD	SU	SD	SU	SD	SU	SD	SU	SD	SU	SD	SU	SD	SU	SD	SU	SD
Part Number	P Code	Size																						
VB-9312-0-4	-2-4	5/8"	5	100	5	175	60	50	60	135	95	5	95	85	35	250	35	250	130	110	130	240	250	30
VB-9313-0-4	-2-4	1/2"	5	100	5	185	45	50	45	130	100	5	100	85	35	250	35	250	100	110	100	250	250	25
	-6	3/4"					20	25	20	70	45		45	45	15	140	15	230	50	60	50	130	155	12
	-8	1"					10	15	10	45	30		30	30	8	95	8	155	30	40	30	90	100	7
	-9	1-1/4"					6	9	6	30	15		15	15	4	60	4	100	15	25	15	55	60	3
	-10	1-1/2"																						
	-11	2"																						
VB-9323-0-4	-4	1/2"							250	250			250	250										
	-6	3/4"							250	250			250	250										
	-8	1"							250	250			250	250										
	-9	1-1/4"							250	250			250	250										
	-10	1-1/2"																						
	-11	2"																						
VB-9332-0-4	-2-3-4	5/8"											37*	37*										

Q607A,B continued

ELECTRICAL RATINGS: (amperes):

	120 V	240 V	480 V
Full Load	9.8	4.9	2.45
Locked Rotor	58.8	29.4	14.7

Pilot Duty: 75 VA at 24 V and 277 V.
Resistive Load: 22 A at 24 V, 120 V, 240 V, 277 V; 15 A at 480 V.

REPLACEMENT PART:
127834 Switch.

TRADELINE models.

Order Number	Switches	Use With
Q607A1076[a]	1 spdt	Honeywell Modutrol motors
Q607B1083[a]	2 spdt.	

[a]With adapter for cover end of spring-return motor and mounting bracket.

M-2

M436A, M836A,B DAMPER MOTORS

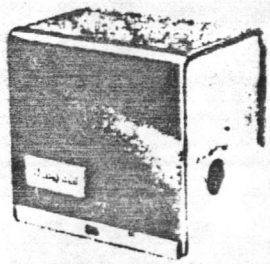

SPRING-RETURN MOTORS FOR 2-POSITION ZONE OR DAMPER CONTROL.

Used in residential and light industrial applications to operate outdoor air dampers for combustion or makeup air, changeover dampers for heating and cooling systems, minimum position dampers for ventilation and similar applications. With internal spdt switch for controlling auxiliary equipment, additional motors, or to provide a burner interlock switch. Spring returns motor to start position on power failure. Drive shafts located on both sides of motor. Angular Stroke: 75 degrees. Power Consumption: 27 W opening for M436A, M836A; 20.3 W opening for M836B. Ambient Temperature Range: 32 F to 125 F [0 C to 52 C]. Approximate Dimensions: 4-1/2 in. [114 mm] high, 4-5/8 in. [118 mm] wide, 3-3/4 in. [95 mm] deep. Listed by Underwriters Laboratories Inc.—M436A, M836A; CSA certified—M436A, M836A.

AUXILIARY SWITCH RATINGS (amperes):

	120 Vac	240 Vac
Full Load	7.2	3.6
Locked Rotor	43.2	21.6

ACCESSORIES:

16254AC Bag Assembly. Mounting bracket, Part No. 128499, and screws.
7640JE Bag Assembly. Drive bushings, adapter, and coupling for direct drive.
7640JL Bag Assembly. Drive lever and clamp for crank arm drive.
7640JM Bag Assembly. Mounting bracket, Part No. 126809, and screws.
7640JN Bag Assembly. Mounting bracket, Part No. 128336, and screws.
4074BRU Bag Assembly. Extension adapter and screws for mounting Q607 Auxiliary Switch to M436A Damper Motor.
Q298B Linkage. Damper crank arms, bushings, 1/4 in. steel rod, and ball joint assemblies.

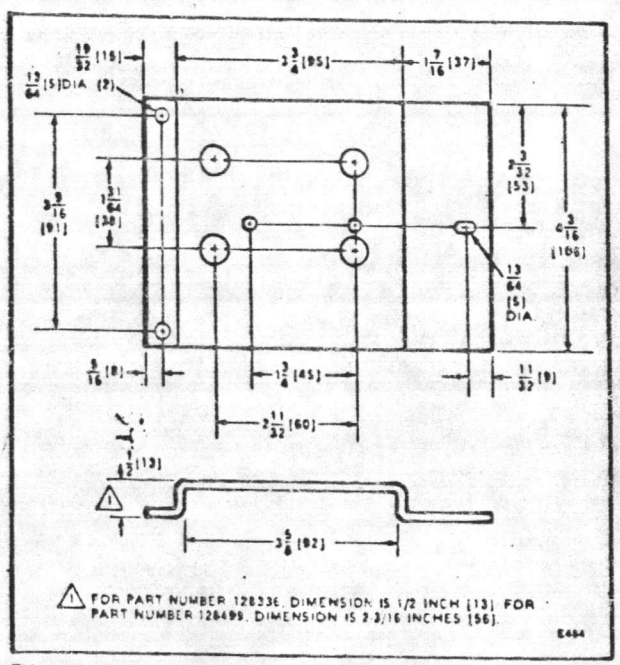

Dimensions of 128336 and 128499 Brackets in in. [mm].

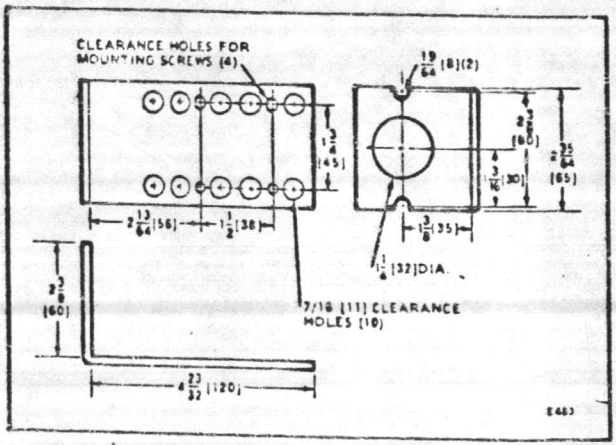

Dimensions of 126809 Bracket in in. [mm].

continued next page

M436A, M836A,B continued

TRADELINE models.

Order Number	Application/ Description	Voltage (60 Hz)	Nominal Opening Current (A)	Nominal Opening Time (sec)	Max. Load Torque		Break-Away Torque[b]		Damper Blade Area		Includes
					lb.-in.	N·m	lb.-in.	N·m	sq ft	m²	
M436A1116	Use with 2-wire thermostats or other spst controllers. With thermal breaker for overload protection during the lifting stroke or if motor stalls.	120	0.37	30	20	2.3	30	3.4	13	1.2	Mounting brackets, Part Nos. 126809, 128336, 128499, and bag assembly containing the drive bushings, adapter, and coupling necessary for direct drive applications and the crank arm lever and clamp necessary for crank arm drive applications.
M436A1124		240	0.19	30	20	2.3	30	3.4	13	1.2	
M836A1042	Use with spst controllers without heat anticipation. With thermal breaker for overload protection during the lifting stroke or if motor stalls.	24	1.85	30	20	2.3	30	3.4	13	1.2	
M8361067[a]		24	1.85	30	20	2.3	30	3.4	13	1.2	
M836B1033	Use with spst controllers which have heat anticipation.	24	1.34	25	15	1.7	30	3.4	10	0.9	

[a]For flame safeguard application with special mounting bracket and crank arm accessories.

[b]Maximum torque available to overcome large loads such as a seized damper or valve, MUST NOT BE USED CONTINUOUSLY AT THIS RATING.

M835A 2-POSITION ZONE MOTOR

USED WITH 2-WIRE, 24 VOLT ROOM THERMOSTAT OR OTHER CONTROLLER FOR 2-POSITION DAMPER CONTROL.

Suitable for control of zone or changeover damper in heating and air conditioning systems, and control gates on feeders. For remote damper blade control, order separately 121825AA Crank Arm and Q298 Linkage Assembly. Electrical Rating: 24 V, 60 Hz. Auxiliary Switch Rating: 2 A at 24 Vac (pilot duty). Motor Timing: 80 seconds to open, 160 seconds to close damper. End Switch: Spst; makes within 20 sec of full open, breaks within 20 sec after start of closing stroke. Motor Torque: 4 lb.-in. [0.45 N·m] or 400 sq in. [0.26 m²] of bearing-mounted damper. Temperature Rating: Heating application—200 F [93 C] duct with 125 F [52 C] ambient maximum; cooling application—140 F [60 C] ambient maximum. Approximate Dimensions: 5-1/2 in. [140 mm] high, 4-1/4 in. [108 mm] wide, 2-5/8 in. [67 mm] deep.

NOTE: A template to assist positioning motor and damper blade is furnished with each M835. Use of 124857A Mounting Plate is recommended.

ACCESSORIES:

D524 Duct Damper Blade.

124857A Mounting Plate.

121825AA Auxiliary Crank Arm Assembly. Attaches to front of motor for remote control of additional dampers.

Q298A Linkage. Variable length linkage rod (10 in. [254 mm] maximum). For use wtih auxiliary crank arm assembly.

continued next page

PENN DAMPERS

AIR CONTROL DAMPERS

Supplementary Data Sheet

TO ENGINEERING BULLETIN PDR-77

MODEL PBD-8 OBD-8

GENERAL DESCRIPTION

Parallel Blade and Opposed Blade dampers are designed using the modular concept to provide maximum quality and performance commensurate with economy and versatility. By utilizing this type of construction, features that were at one time "optional extras" now become standard features without adding to the cost of the air control damper.

The PBD-8 and OBD-8 dampers are specifically designed to operate in systems when the approach velocity does not exceed 2000 FPM and the static pressure differential does not exceed 4" WG.

MODELS AVAILABLE

Model PBD-8 parallel blade action
Model OBD-8 opposed blade action

OPTIONAL FEATURES

Thrust Bearings	Aluminum Blades
Nylon Bearings	2" Channel Frame
Enamel or Lacquer Finish	Concealed Linkage
Reinforced Corners	Sized to Order

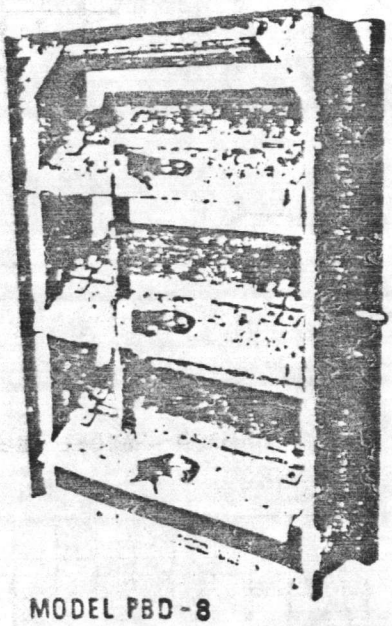

MODEL PBD-8

SPECIFICATIONS

Frame: 16 gauge galvanized steel roll formed channel 5½" W x 1" H with pre-punched slotted mounting holes - 7" O.C.

Blades: 16 gauge galvanized steel, maximum width 8"; blades 36" and longer furnished with reinforcing cone; driven blade furnished with reinforcing cone.

Ext. Shafts: ½" diameter cadmium plated steel; 6" long with grip-lok flattened end.

Bearings: Precision machined oilite bronze, sleeve type

Side Seal: Stainless spring steel

Finish: Galvanized Steel, Mill

Sizes: Minimum 12" W x 12" H; Maximum 48" W x 72" H, single section; ganging of damper sections allow unlimited sizes.

EFFICIENCY

Refer to Figure 1

1. Dampers with blade edging of Penyltrene resiliant sealing gasket, ". . . air loss through Models PBD-8 or OBD-8 will be less than 1% of the full flow rate when operating at pressure differentials under 4" WG . . ." Approach velocity 2000 FPM. 0.5%

ORDER INFORMATION REQUIRED:

1. Specify Model No.
2. Specify quantity
3. Specify size, width x height in inches. Width is first digit.
4. Specify optional features required.

PENN VENTILATOR CO., INC.

GENERAL SPECIFICATIONS

Parallel blade and Opposed blade dampers (PBD-8 and OBD-8) are engineered to provide the high performance required for the proper operation of HVAC systems. These dampers are designed for use in systems when the approach velocity does not exceed 2000 fpm and the pressure differential across the damper does not exceed 4" w.g.

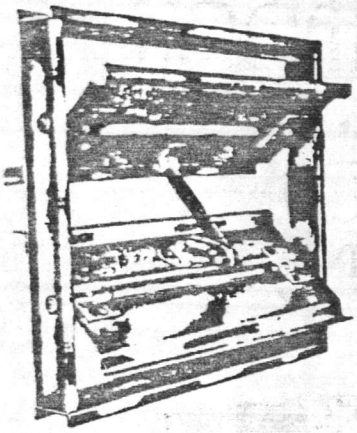

Model OBD-8
STRAIGHT SIDE
2" CHANNEL FRAME
OPPOSED BLADE

AIR LEAKAGE FIGURE 1

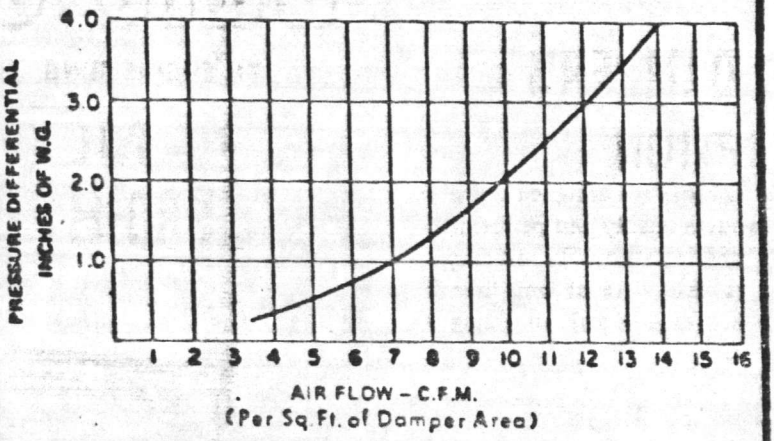

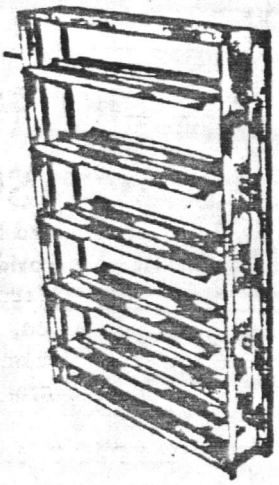

Model PBD-8
CONCEALED LINKAGE
5½" CHANNEL FRAME

PRESSURE DROP

PARALLEL BLADE DAMPER – MODEL PBD-8

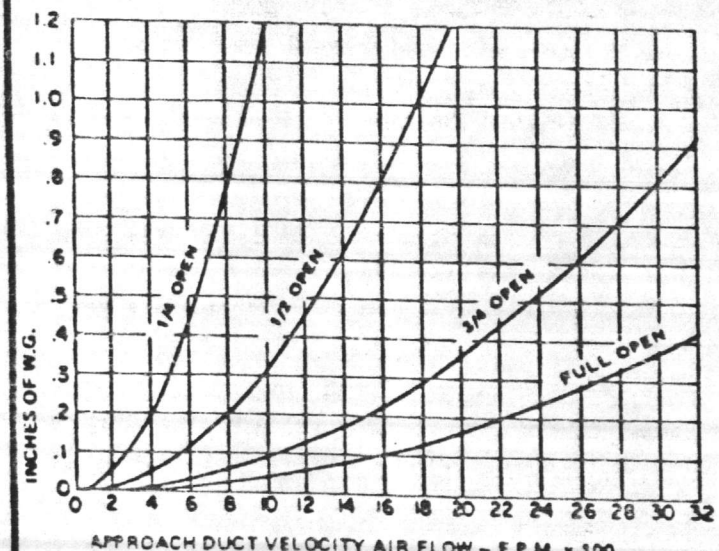

OPPOSED BLADE DAMPER – MODEL OBD-8

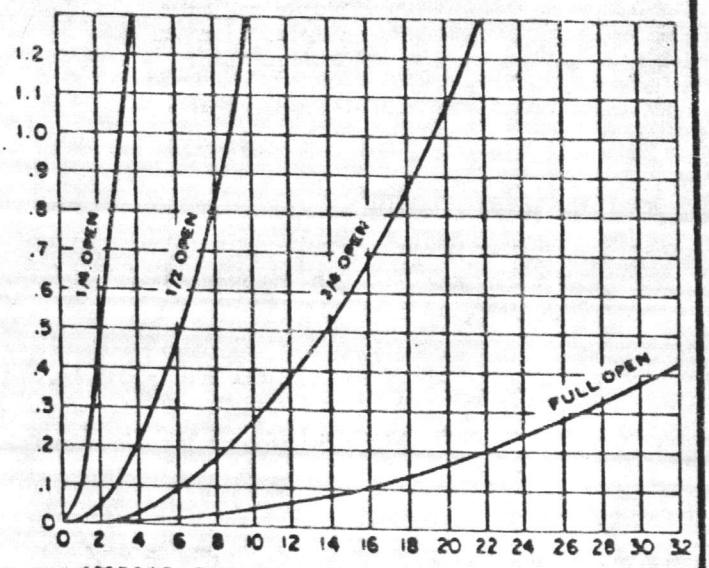

OPERATING TORQUE

NO AIR MOVEMENT – 3.10 IN. LBS. OF TORQUE PER SQ. FT. OF DAMPER FACE AREA.

DO NOT SELECT OPERATOR WITH LESS THAN 20 IN. LBS. FOR ANY SIZE OF DAMPER.

PENN VENTILATOR CO., Inc.
RED LION AND GANTRY ROADS
PHILADELPHIA, PA U S A 19115
TELEPHONE: . . . . . (215) 464 8900
TELEX: . . . . 83-4545 (PENVENGEN PHA)

PENN AIR CONTROL MECHANICAL DAMPER

(MODEL OBD-8)

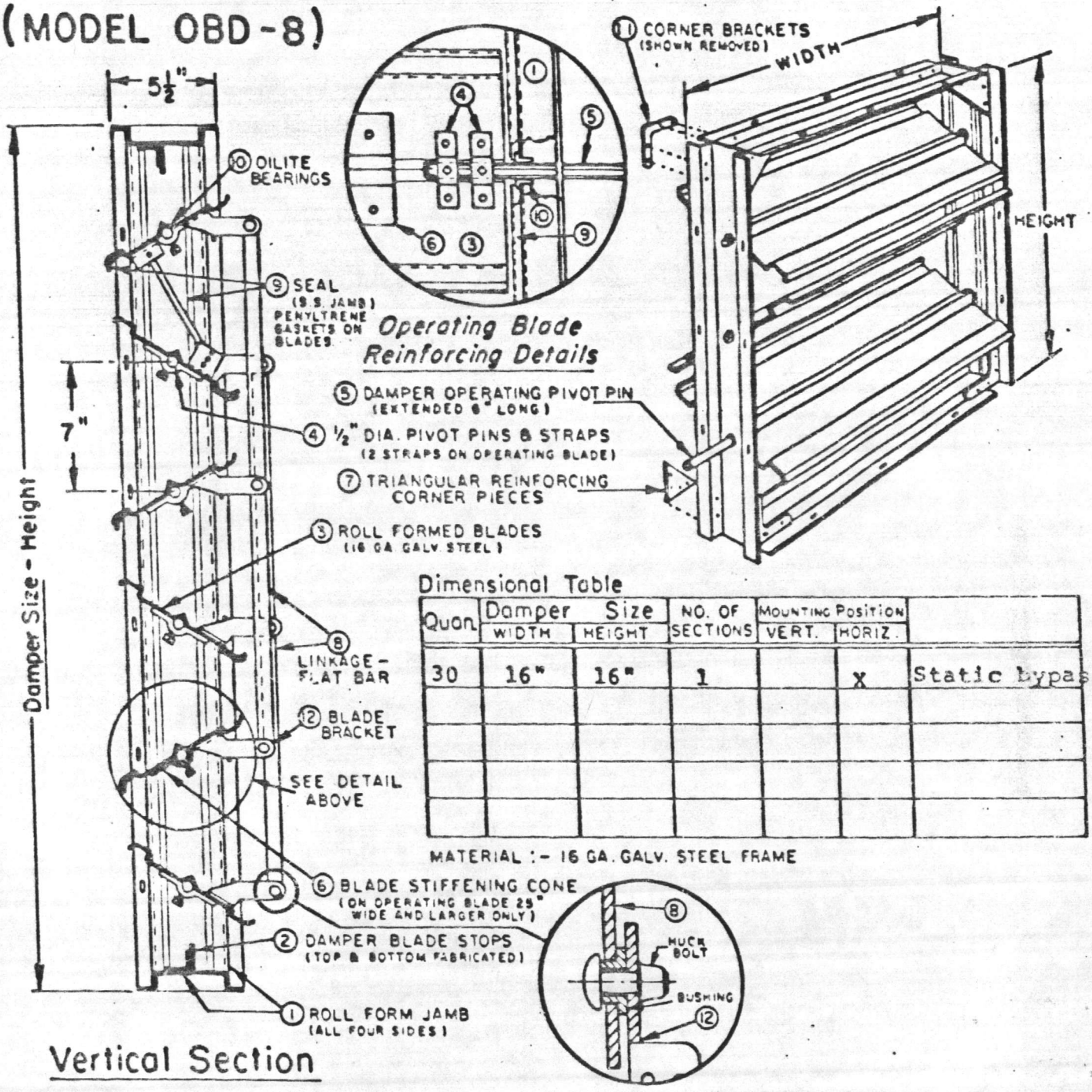

Dimensional Table

Quan	Damper Size WIDTH	Damper Size HEIGHT	NO. OF SECTIONS	Mounting Position VERT.	Mounting Position HORIZ.	
30	16"	16"	1		X	Static bypass

MATERIAL :- 16 GA. GALV. STEEL FRAME

NOTES: 1. SINGLE PANEL MAX. WIDTH 48", MAX. HEIGHT 72".

PROJECT:	ENGINEER:
LOCATION:	CONTRACTOR:
ARCHITECT:	SUB-CONTR.

DRAWING NO.		REVISIONS
DATE:		NO. 1
DRAWN BY: B.G.	CHK BY.	NO. 2
		NO. 3

PENN VENTILATOR CO., Inc.
RED LION AND GANTRY ROADS
PHILADELPHIA, PA. U.S.A. 19115
(AREA CODE 215) 464-8900 TELEX 83-4545

THIS DRAWING ILLUSTRATES OUR UNDERSTANDING OF ORDER REQUIREMENTS. WHEN APPROVED IT REPRESENTS DETAILS FOR FABRICATION AS SUCH PENN VENTILATOR WILL NOT BE RESPONSIBLE FOR RE-WORK IN THE FIELD OR OTHER CHANGES AFTER RELEASE FOR FABRICATION.

PUBLISHED & PROTECTED BY PENN VENTILATOR CO., INC. PHILA. PA. ALL RIGHTS RESERVED. MAY NOT BE REPRODUCED PARTIALLY OR IN FULL WITHOUT PERMISSION FROM THE PUBLISHER.

FORM MD-OBD-R2

PENN AIR CONTROL MECHANICAL DAMPER

(MODEL PBD-8)

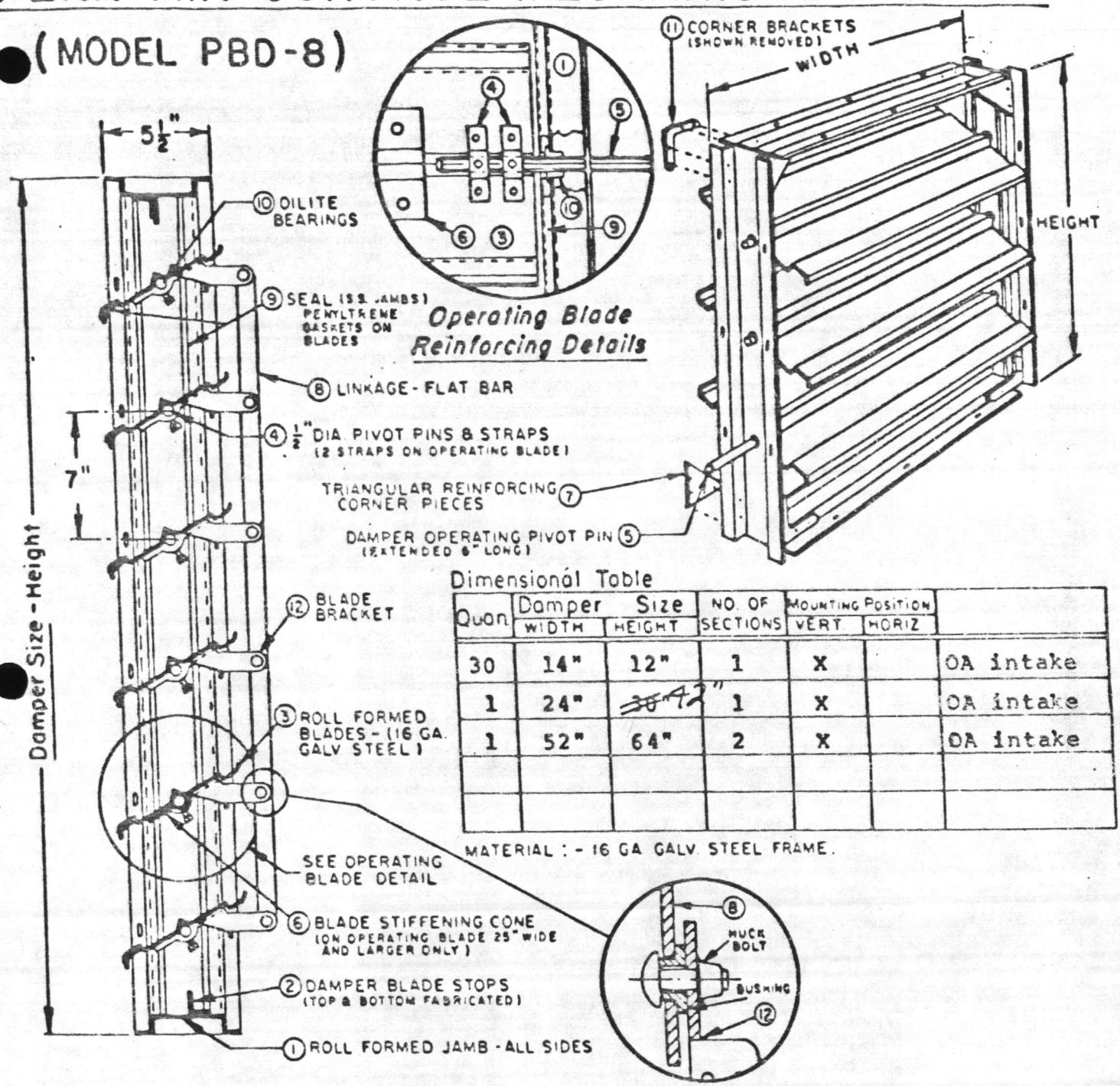

Dimensional Table

Quan	Damper Size WIDTH	HEIGHT	NO. OF SECTIONS	MOUNTING POSITION VERT.	HORIZ	
30	14"	12"	1	X		OA intake
1	24"	~~36~~ 42"	1	X		OA intake
1	52"	64"	2	X		OA intake

MATERIAL : - 16 GA GALV. STEEL FRAME.

Vertical Section

NOTES 1. SINGLE PANEL MAX. WIDTH 48" MAX. HEIGHT 72".

PROJECT:	ENGINEER.
LOCATION:	CONTRACTOR:
ARCHITECT.	SUB-CONTR.

DRAWING NO		REVISIONS
DATE.		NO 1
DRAWN BY B.G.	CHK. BY.	NO 2
		NO 3

PENN VENTILATOR CO., Inc.
RED LION AND GANTRY ROADS
PHILADELPHIA PA U.S.A. 19115
(AREA CODE 215) 464-8900 TELEX 83 4545

THIS DRAWING ILLUSTRATES OUR UNDERSTANDING OF ORDER REQUIREMENTS. WHEN APPROVED, IT ALONE IS DETAILED AS FOR FABRICATION AS SUCH PENN VENTILATOR WILL NOT BE RESPONSIBLE FOR REVISIONS IN THE FIELD OR OTHER CHANGES AFTER RELEASE FOR FABRICATION.

FORM MD - PBD - R2

PUBLISHED & PROTECTED BY PENN VENTILATOR CO., INC. PHILA. PA. ALL RIGHTS RESERVED. NO PART OF THIS DRAWING MAY BE REPRODUCED OR TRANSMITTED IN ANY FORM OR BY ANY MEANS, ELECTRONIC OR MECHANICAL, INCLUDING PHOTOCOPYING, RECORDING OR BY ANY INFORMATION STORAGE AND RETRIEVAL SYSTEM, WITHOUT PERMISSION IN WRITING FROM THE PUBLISHER. NOR SHALL IT BE LOANED, COPIED OR REPRODUCED OR DISCLOSED TO OTHERS FOR MANUFACTURING OR OTHER PURPOSES WITHOUT THE WRITTEN CONSENT OF PENN VENTILATOR CO., INC. OR ITS AUTHORIZED REPRESENTATIVES OR AS EXPRESSLY PERMITTED BY LAW OR AS OTHERWISE AGREED TO IN WRITING BY PENN VENTILATOR CO., INC.

PLATE 3.9A

HANKISON
SERIES 80 Compressed Air Dryers

STANDARD FEATURES FOR THESE DRYERS INCLUDE:

- Power On Light (green)—Indicates power to unit
- High Air Temperature Warning Light (red)—Gives indication of refrigeration system malfunction or overloading.
- Hankison Designed & Manufactured Pilot Operated Automatic Condensate Drain Trap
- Facility for Wall Mounting Models 8010 thru 8035—Models 8010 & 8015 feature exclusive "one man" wall mounting bracket assembly
- Integral 40 Micron Particulate Afterfilter—Assures clean air downstream
- Provisions for Connection of Remote Alarm

Typical Series 80 Dryers* (Model 8010 Shown)

ENGINEERING AND ORDERING INFORMATION

Hankison Series 80 dryers are complete with: non-fouling, smooth surface, tube-in-tube heat exchanger/chiller; non-cycling, hermetically sealed refrigeration system; self-regulating hot gas by-pass valve to maintain constant dew point from no load to full load; mechanical condensate separator; integral 40 micron porous bronze afterfilter; and pilot operated automatic condensate drain trap.

All units can handle additional capacity (SCFM) when inlet air pressure is higher than 100 psig, inlet air temperature is lower than 100°F., ambient air or condenser cooling water temperature is lower than 100°F. or if elevated dew points (up to 50°F.) are suitable for the application.

***Model 8010 can be purchased as a package complete with Hankison Air By-Pass Valve (model 1701-1), Aerolescer® oil removal filter, pressure regulator and pressure gauges, all factory mounted on unit.**

MODEL NO.		8010		8015		8025		8035		8045		8055		8070		80100	
Flow Capacity (SCFM)1		10		15		25		35		45		55		70		100	
Max. Working Pressure		150 psig (175 psig & 300 psig available)								175 psig (300 psig available)							
Air Line Conn.	In (ins.)	⅜ O.D. tube		⅜ O.D. tube		⅝ O.D. tube		⅝ O.D. tube		1⅛ O.D. tube		1⅛ O.D. tube		1⅛ O.D. tube		1⅛ O.D. tube	
	Out (ins.)	⅜ Male NPT		⅜ Male NPT		½ Male NPT		⅝ O.D. tube		1 Female NPT		1⅛ O.D. tube		1 Female NPT		1⅛ O.D. tube	
Drain Connections (ins.)		5/16 I.D. Flexible Tube								3/8 O.D. Tube Fitting							
Refrigeration Comp. HP		1/6		1/5		1/3		1/3		1/2		1/2		3/4		3/4	
Standard Voltages Available2		115 V, 1 phase, 60 Hz 240/220 V, 1 phase, 50 Hz								115 V, 1 phase, 60 Hz 230/208 V, 1 phase, 60 Hz							
		115V	240/220V	115V	240/220V	115V	240/220V	115V	240/220V	115V	230/208V	115V	230/208V	115V	230/208V	115V	230/208V
Full Load Amps.		3.3	1.5	4.8	2.2	7.4	3.5	7.4	3.5	9.8	4.8	9.8	4.8	18.5	9.4	18.5	9.4
Locked Rotor Amps.		18.5	9.1	24.5	11.6	35.7	16.3	35.7	16.3	47.9	24.4	47.9	24.4	69	41.8	69	41.8
Unit Protection 3 Fuse Size (Max.) Amps.		5	2	6	3	10	5	10	5	12	6	12	6	25	12	25	12
Branch Circuit Fuse Size (Max.) Amps.		15	15	15	15	15	15	15	15	15	15	15	15	30	15	30	15
Overload Protector		Thermal & Current (Automatic Reset)															
Height	(inches)	14		14		16		16		22¼		22¼		22¼		22¼	
Width	(inches)	16-1/8		16-1/8		22-1/16		22-1/16		32-1/4		32-1/4		32-1/4		32-1/4	
Depth	(inches)	15		15		16		16		19½		19½		19½		19½	
Weight	(lbs.)	58		68		96		98		187		212		220		235	

1Conditions for rating above dryers are in accordance with Class H of the National Fluid Power Association Recommended Standard NFPA/T3.27.2-1975. NFPA Class H Dryers are rated at 33°F. (.56°C.) to 39°F. (3.9°C.) pressure dew point range at 100 psig (6.9 bar) & 100°F. (37.8°C.) inlet air, 100°F. (37.8°C.) ambient air with a maximum 5 psi (.35 bar) pressure drop. Evaporator (chiller section) control circuit is factory set at 35°F. (1.7°C.).

2For other power requirements, consult factory.

3Ratings are for dual element fuses.

HANKISON CORPORATION, Canonsburg, Pa. 15317, Phone 412/745-1555, Telex: 81-2452, Cable: HANKORP

PRICE AND ORDERING INFORMATION AVAILABLE FROM:

HANKISON

NFPA NATIONAL FLUID POWER ASSOCIATION
ENERGY FOR INDUSTRY

TR-1

I. Introduction

The Model 750M is a Digital to Analog (D to A) converter designed to operate in conjuction with a Data Industrial flow sensor. The unit can be easily recalibrated in the field by using a Data Industiral Model 900 or Model 950 Digital Display as a tool, and can provide the following analog signals with the simple repositioning of a selection jumper bar.

Selectable Analog Outputs:

1. 4-20ma
2. 0-1 volt
3. 0-5 volts
4. 0-10 volts

The overrange limits and output impedance for each of these output forms can be found under Product Spcification, (Section IV). The D to A converter is a 4-wire design wherein the analog output is isolated from the power supply.

IV. SPECIFICATIONS

A. General

1. Operating Temperature Range:	from -0°C to +55°C
2. Storage Tempreature Range:	from -40°C to +70°C
3. Power Requirements:	12VAC (.2VA) and 24VAC (2VA), 50/60hz
4. Sensor Input Requirements:	from -0 to 8 volts, typical no rise limits, compatable with DATA INDUSTRIAL 220 series sensors
5. Span Adjustment Range:	from -6hz to 70hz
6. Linearity	less than 1%
7. Output Response Time:	6 seconds (typical); 10% to 90% step response
8. Designed Output Ripple:	less than 0.25% of full scale; System output ripple may exceed this value due to the dynamics of the application.

B. 4-20ma Configuration

1. Output Impedance:	greater than 1 Meg Ohm shunted by 1 microfarad
2. Output Compliance:	22 volts (typical); 0-1100 ohms
3. Maximum Output Current:	35ma (max)

C. 0-1 Volt Configuration

1. Output Impedance:	62 ohms (typical) shunted by 1 microfarad
2. Overrange Output Voltage:	2.2 volts (max)

D. 0-5 Volt Configuration

1. Output Impedance:	330 ohms (typical) shunted by 1 microfarad
2. Overrange Output Voltage:	12 volts (max)

E. 0-10 Volts Configuration

1. Output Impedance:	620 ohms (typical) shunted by 1 microfarad
2. Overrange Output Voltage:	22 volts (max)

V. SENSORS

A. Types

Data Industrial provides several basic sensor configurations using the same impeller element. This allows a wider range of applications and pipe sizes. The following is a list of the sensors and application parameters.

- Model 220B - This is the standard brass sensor used in all pipe sizes from 3 inches (76.3mm) to 99.9 inches (2537.5mm) in diameter. It is mounted into the pipe with the use of a welded-on 2" NPT threaded opening. The pressure and temperature ratings are diagramed below:

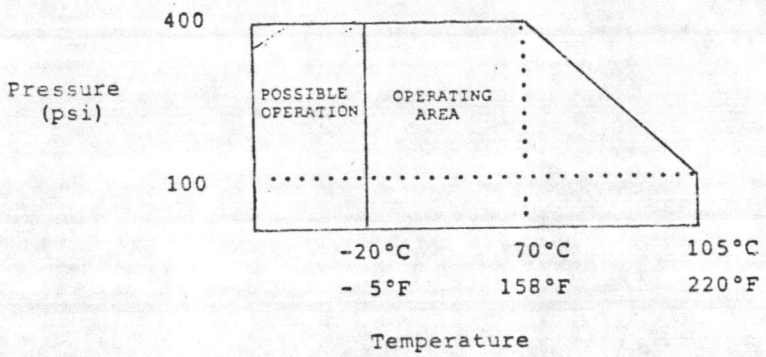

- Model 220SS - This is the same as Model 220B except that the sensor is made from 316 stainless steel. The temperature and pressure characteristics are the same as the Model 220B.
- Model 220P - This consists of a modified PVC tee into which a removable, glass-filled nylon sensor is inserted. Discrete sizes of 1 inch, 1½ inches, 2, 3 and 4 inches are available. Specify the pipe size when ordering by using a dash number such as 220P-1, 220P-1½ or 220P-2, etc. This sensor has the following temperature/pressure rating:

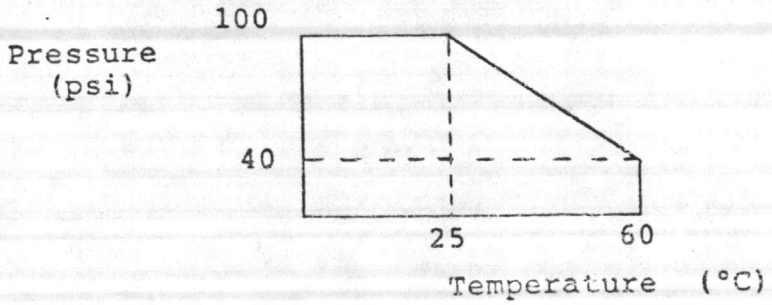

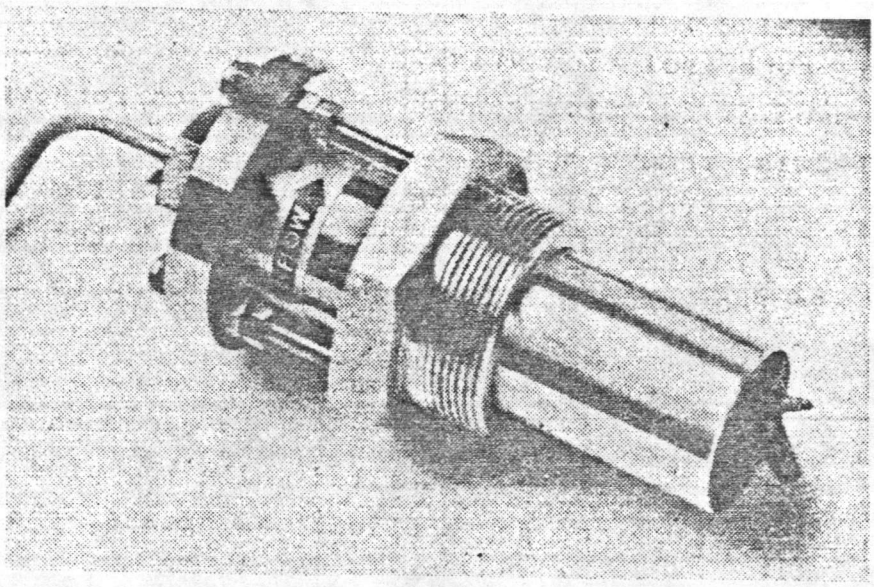

FSN

MODEL 220B & 220SS SENSORS

Figure 4A

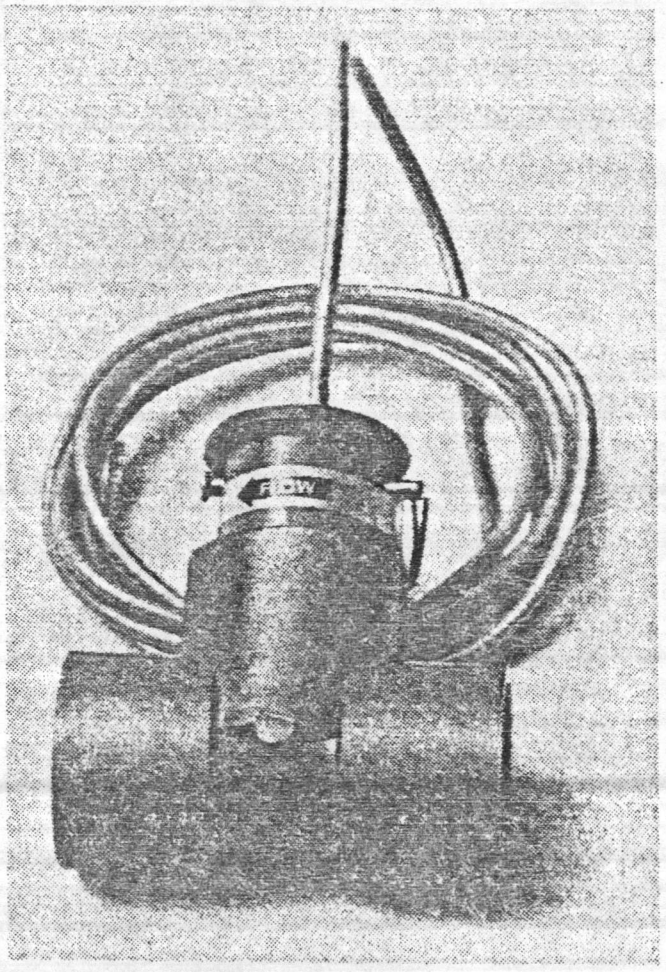

MODEL 220P SENSOR

Figure 4B

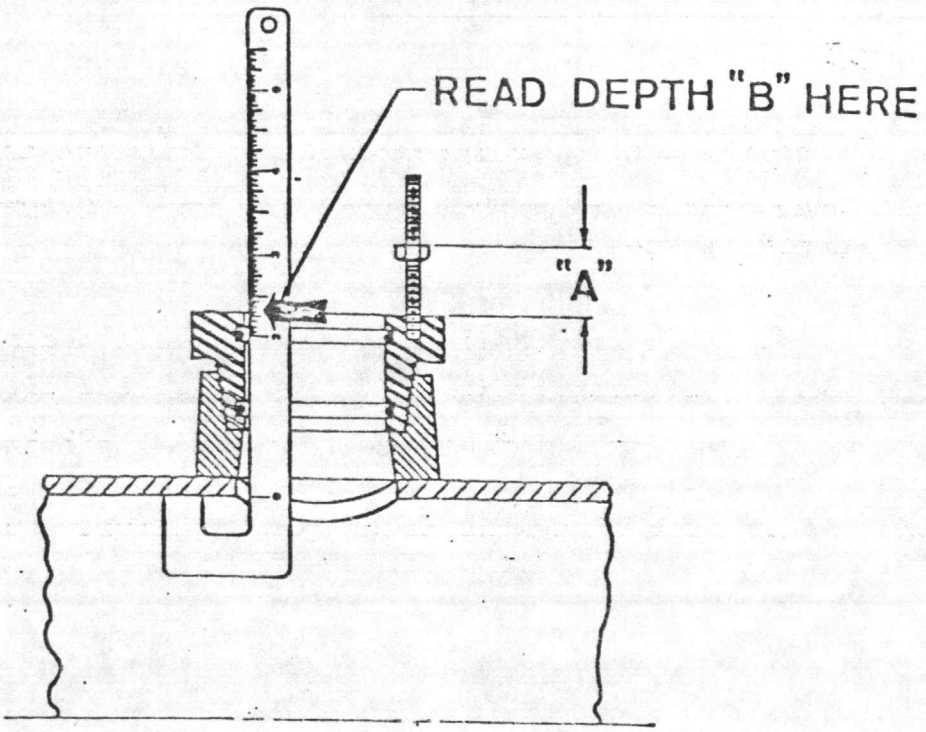

Figure 7 A

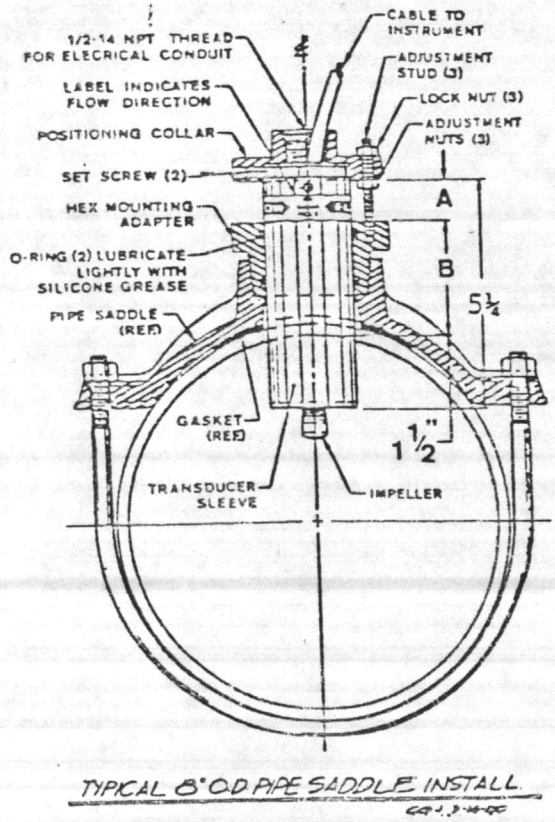

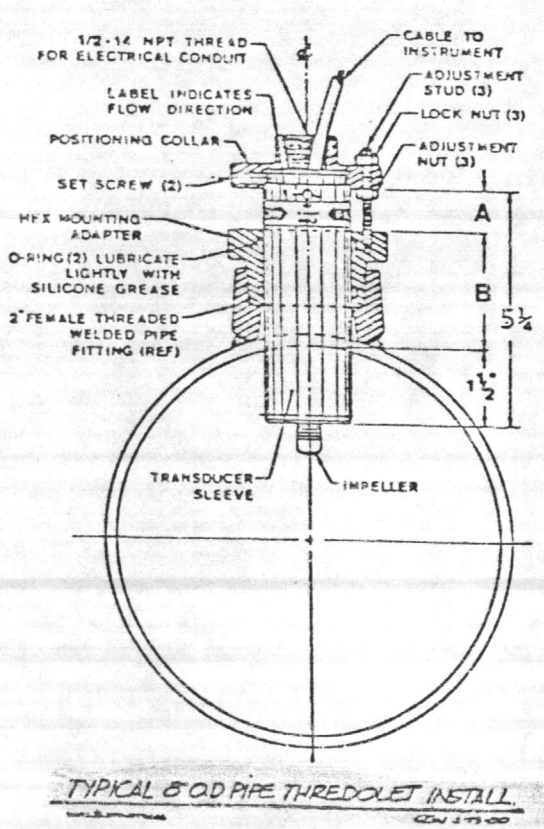

Figure 7 B

AITKEN

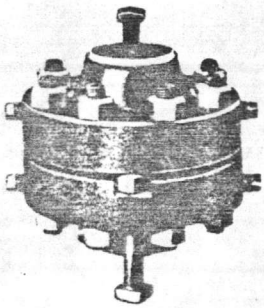

ORIFICE FLANGES

Orifice flanges 2" thru 24" 300 lb. and 600 lb. weld neck and slip-on now manufactured by Aitken, Inc.

Manufactured in accordance with ANSI B-16.5 — I.D. tolerances in accordance with A.G.A. committee report No.3

Complete inventory in carbon steel!

ALLOYS AVAILABLE UPON REQUEST.

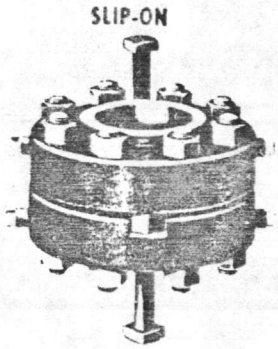

ORIFICE PLATES

Aitken Orifice Plates are made in strict accordance with ISA standards using factory polished stainless steel stock. Aitken plates are carefully checked for thickness, flatness and concentricity of bore. After boring, the plate is hand finished by polishing. Each plate is individually inspected and packaged. Immediate delivery can be made using type 304 and 316 stainless steel 1/8" or 1/4" thick. Aitken Orifice Plates are available in both the series 500 and series 520 Paddle-type. Line sizes offered are 1" thru 24".

Pipe Size	CATALOG 500 Aitken Orifice Plates	CATALOG 520 Paddle-Type Orifice Plates			
		125 & 150 ANSI	250 & 300 ANSI	600 ANSI	900 ANSI
1	1.312	2	2¼	2	3¼
1½	2.000	3	3¼	3	3¾
2	2.437	4	4¼	4	5¼
3	3.437	5	5¼	5	6¾
4	4.406	6	7¼	7	8¼
6	6.437	8	9¼	10	11¾
8	8.437	11	12¼	12	14¼
10	10.687	13	14¼	15	17¼
12	12.593	16	16¾	18	19¾
14	13.750	17	19¼	19	20½
16	16.000	20	21¼	22	22¾
18	17.9375	21½	23¾	24	25
20	20.000	23	25¼	26	27½
24	24.250	28	30¼	31	32¾

Outside diameters shown in inches

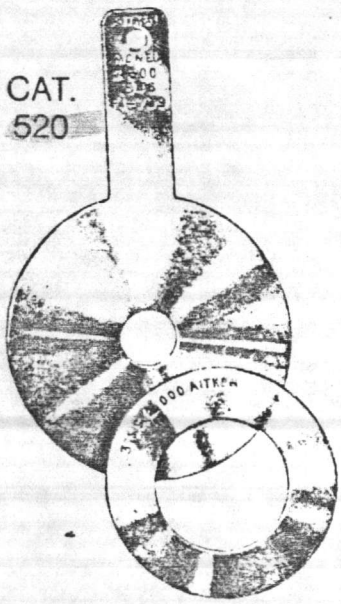

AITKEN, INC.

3101 HOLMES ROAD • HOUSTON, TEXAS 77051

MAILING ADDRESS: P.O. BOX 14018 • HOUSTON, TEXAS 77021

TELEX 77-5509 • PHONE (713) ~~796-6241~~ 431-1531

Robinson-Halpern

TECHNICAL DATA

152 Series
Industrial Pressure Transducer

Features

- ±0.5% static error band
- Infinite Resolution
- NEMA 1 housing
- Economical
- Long term stability
- Low power consumption
- Zero and span adjustments
- 2 wire, 4-20mA available
- Internal voltage regulator
- Polarity reversal protection

Applications

- Petrochemical and process control installations
- Engine diagnostic testing
- Mass transit and shipboard applications
- Flow and level measurement
- HVAC • OEM

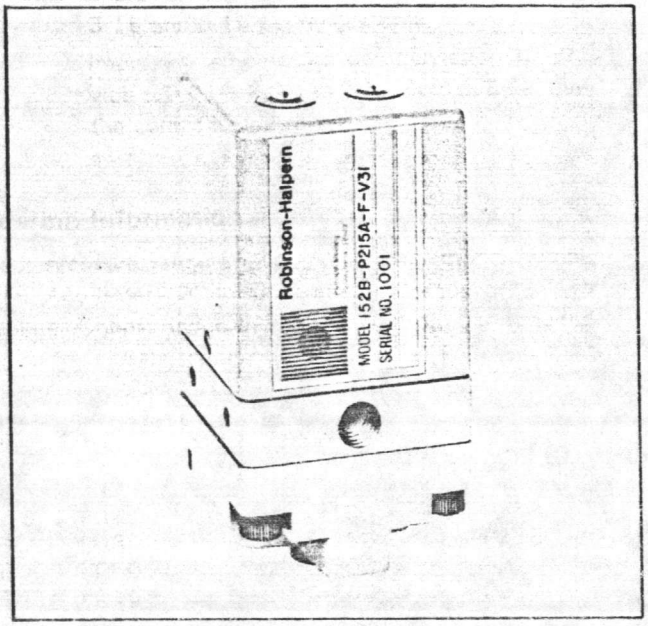

General Description

The Model 152 Pressure Transducer meets the requirements for a general purpose, reliable and economic pressure transducer for industrial and process control installations. It is contained in a NEMA 1 cast aluminum housing, and is designed so that the transducer can be easily repaired without degrading its integrity..

This transducer measures pressure of liquids or gases and is available in 13 ranges from 1.5 to 300 psi full scale gage, differential or absolute (except 1.5 psia). The static error band is ±0.5% of full scale. The operating temperature range is −40° to +176°F and compensated from +25° to +150°F. Zero and span adjustments are accessible externally.

Operation

When pressure is applied to the Ni-Span-C capsule its motion is directly transmitted to the ferromagnetic core of a linear variable differential transformer (LVDT). Resolution is infinite. The high frequency AC required by the LVDT is generated by an internal oscillator. The AC signal is demodulated and a buffer-amplifier provides the DC output. An internal voltage regulator permits operation from an unregulated source and features polarity reversal protection.

Model 152B

The Model 152B can be operated from either of two DC voltage input ranges with a choice of four low voltage DC outputs.

Model 152C 2 Wire, 4-20mA Output

The Model 152C transducer behaves like a current controller that varies with input pressure. At zero pressure, or low end of the range, the loop current is 4mA. As the pressure increases, the current increases until it reaches 20mA at the high end of the range.

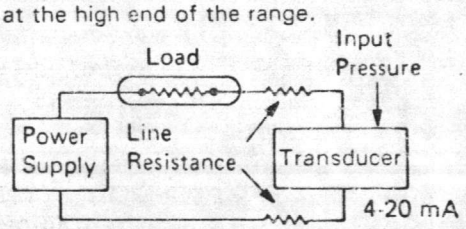

The transducer will operate from supply voltages of 12 to 38 VDC. With a nominal 24 volt supply, the maximum load is 600 ohms. See chart for maximum allowable loads with other supply voltages. A 2 wire system simplifies installation and reduces cost. Refer to Model 152S data sheet for intrinsically safe transducers.

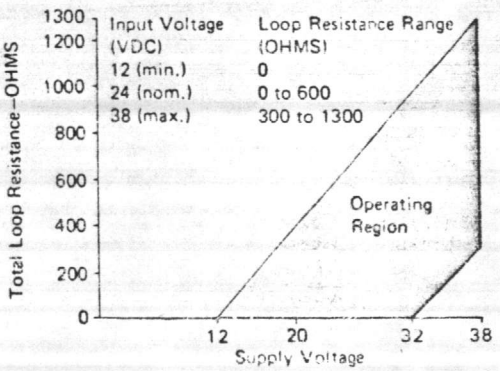

ROBINSON-HALPERN COMPANY
One Apollo Rd. Plymouth Meeting Pa. 19462

215-825-9200
TWX #510-660-8637 (ROBHALCOPMTG)

Specifications

STATIC ERROR BAND

±0.5% F.S. includes linearity (best straight line), hysteresis and repeatability.

TEMPERATURE RANGE

Compensated:	+25° to +150°F. (− 4° to +65°C)
Operating:	−40° to +176°F. (−40° to +80°C)
Storage:	−65° to +185°F. (−55° to +85°C)

TEMPERATURE EFFECT

Over compensated range
Zero: ±0.02% F.S. per °F.
Span: ±0.02% per °F.

OVERPRESSURE RATINGS

Proof Pressure: 150% of rated pressure
Static Pressure: 450 psi max.

INPUT VOLTAGE EFFECT

A 1% input voltage change will cause less than a 0.005% change in output.

OUTPUT IMPEDANCE

1.0 ohm, nominal, for voltage output units.
1.0 megohm, nominal, for current output units.

RIPPLE

0.5% F.S. RMS, max.

ZERO AND SPAN ADJUSTMENT RANGE

±5% F.S. each, nominal.

WETTED PARTS

Gage or Absolute: Ni-Span-C, solder, aluminum and Buna-N.
Differential: Same as above plus 316 SST and Alloy 52.

ELECTRICAL CONNECTIONS

22 AWG PVC Cable, 18 inches long.

NET WEIGHT

12 oz. (340 gm).

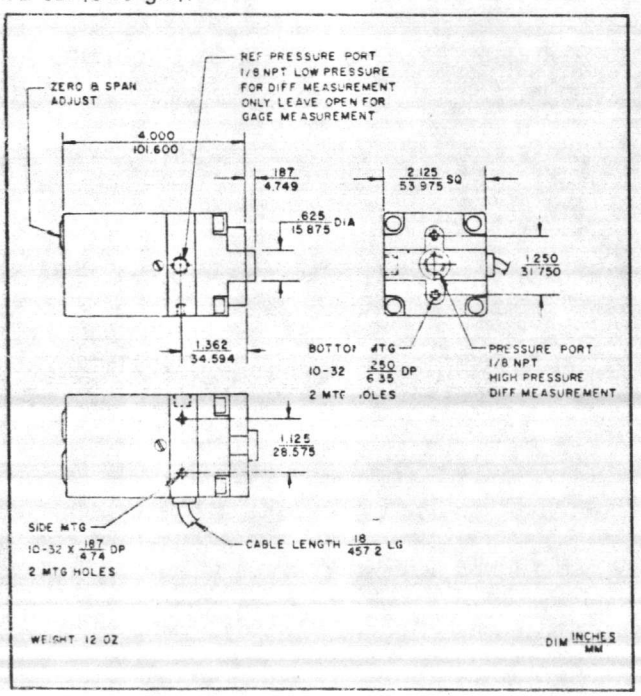

Specifications subject to change without notice.

OPTIONS

A	Electrical Connector attached to cable, male Type PTO6E-10-6P (SR).
C( )	Extra cable length. Add number of feet required in parenthesis after option letter.
R	Improved static error band of ±.25% 3-15 and 0-15 psi ranges only.
T	Improved temperature compensation to provide ±0.01% F.S. per°F for Zero or Span over the compensated range.

Ordering Information

Select pressure range and corresponding model number suffix. Add letter "D" for gage and differential or "A" for absolute. Choose input and output and options required. Add suffixes to the model number together with option letters alphabetically. 0-1.5 psia not available.

PRESSURE RANGES

Range, Psig	Model No. Suffix	Range, Psig	Model No. Suffix
0-1.5	P015	0-100	P210
0-3	P030	0-150	P215
0-6	P060	0-200	P220
0-10	P110	0-300	P230
0-15	P115		
3-15	P905	Inches Hg.	
0-30	P130	0-30 (Vac)	H995
0-60	P160		

POWER INPUT — MODEL 152B

24 to 32 VDC, calibrated at 28 VDC	F
12.0 to 25 VDC, calibrated at 15 VDC	G

DC current drain, 5mA maximum.

OUTPUT AND LOAD — MODEL 152B

0-1 volt into 5K min.	V31
0-5 volt into 5K min.	V35
0-10 volt into 5K min. (15VDC minimum input required)	V41
1-5 volt into 5K min.	V95

2 Wire, 4-20 mA Output — Model 152C

See chart for input voltage vs. load characteristics. Complete model number is 152C-PXXXX, where "XXXX" represents pressure range to be chosen. See example.

Examples

152B — P215A — F — V31

- 152B: Pressure Transducer
- P215A: Pressure Range 150 psi, absolute
- F: Input 24 to 32 VDC
- V31: Output 0-1 VDC

152C — P115D — A

- 152C: Pressure Transducer 2 wire, 4-20mA Output
- P115D: Pressure Range 0-15 psi, gage
- A: Connector (Option)

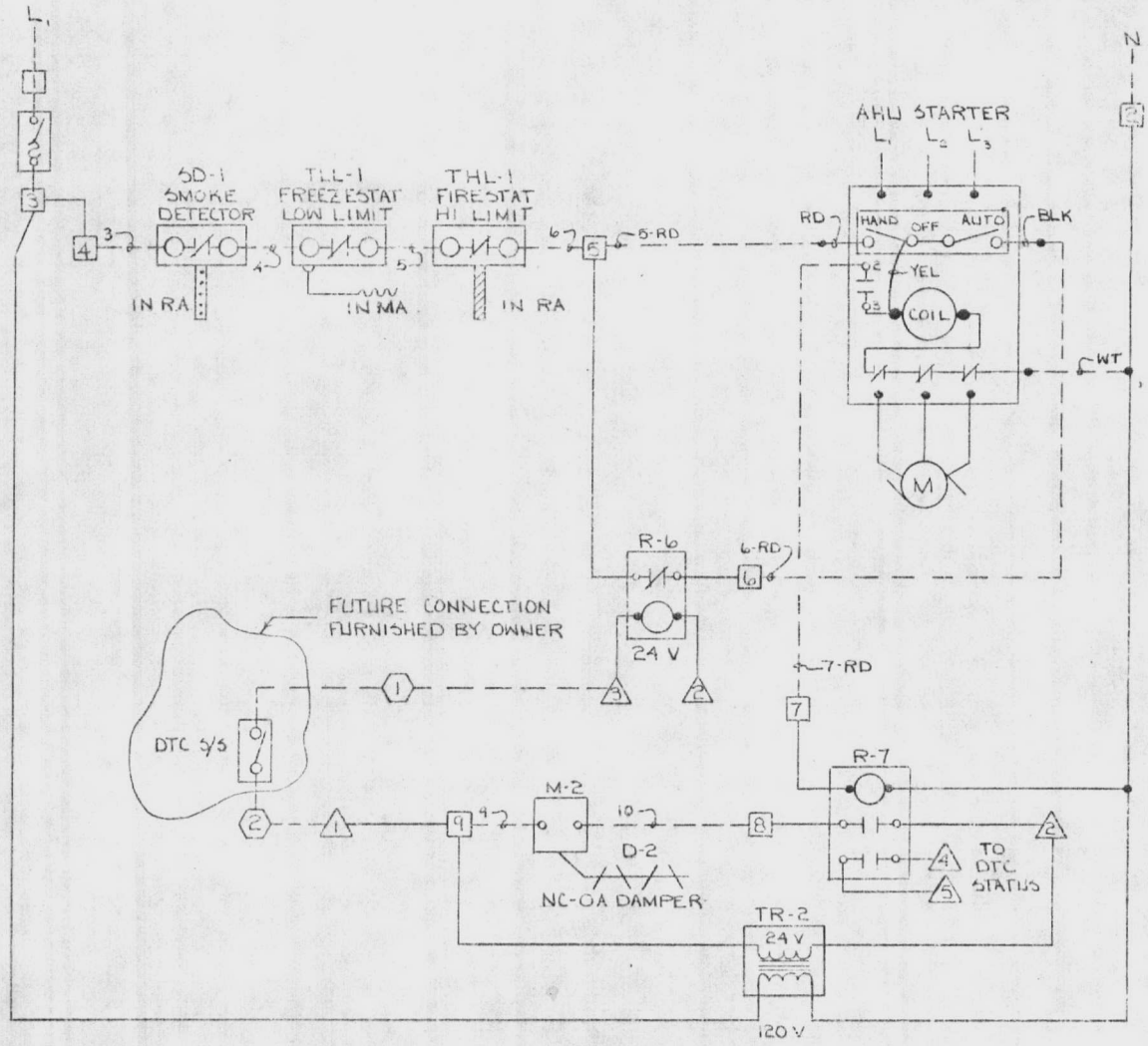

AHU INDEXING AND STARTER INTERLOCK
(6) SETS PER BLDG

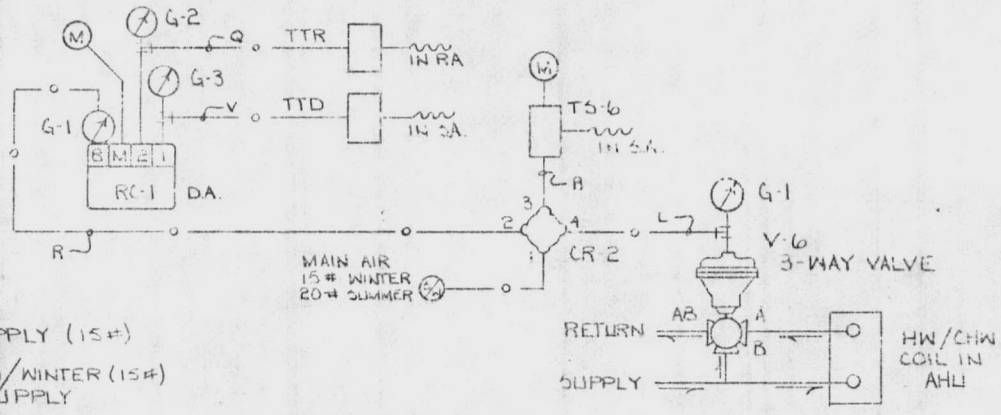

AHU PNUEMATIC CONTROLS
(1) SET PER AHU

LEGEND:

- (M) MAIN AIR SUPPLY (15#)
- (S/W) SUMMER (20#) / WINTER (15#) MAIN AIR SUPPLY
- □ LINE VOLT TERM. IN PANEL
- △ LOW VOLT. TERM. IN PANEL
- ⬡ DTC TERM.
- ----- WIRING OUTSIDE PANEL
- ——— WIRING INSIDE PANEL
- -o-o- PNUEMATIC BRANCH LINE

Jay Johnson Company, Inc. A Sales Representative for Barber-Colman	JOB NAME, LOCATION	UNACCOMANIED ENLISTED PERSONNEL HOUSING, #B-22 CAMP LEJEUNE, NC
CONTRACTOR: RAMSEY A/C CO., INC.	DATE: 2-6-86	DRN. BY NEG
REVISIONS: 2-6-86 "AS BUILT"	TC-4499 E-927	SHT. 1 OF 5

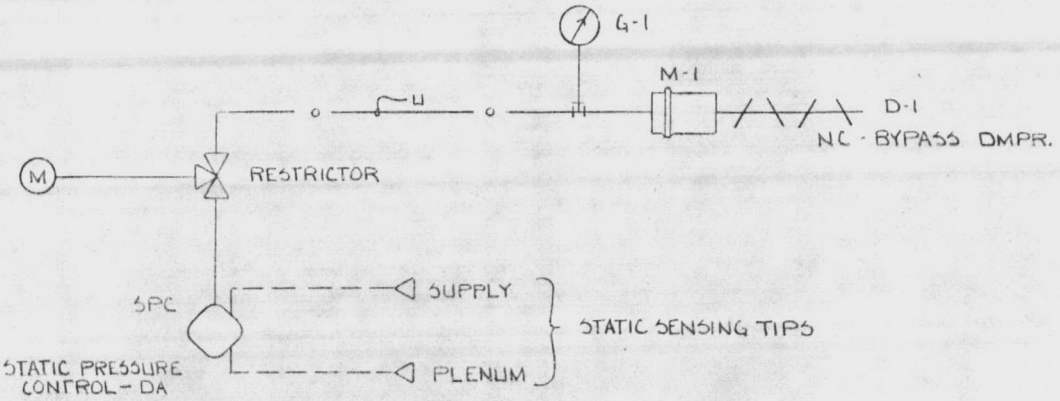

PLENUM (SUPPLY DUCT) STATIC PRESS. CONTROL

(1) SET PER AHU

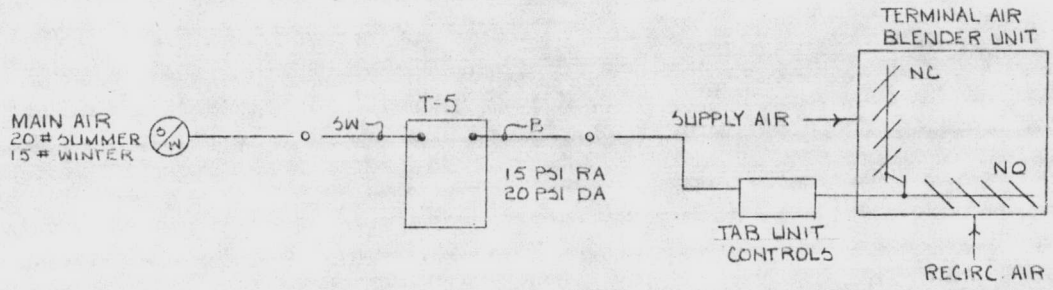

TAB UNIT CONTROL

(96) SETS PER BLDG

Jay Johnson Company, Inc. A Sales Representative for Barber-Colman	JOB NAME, LOCATION: UNACCOMANIED ENLISTED PERSONNEL HOUSING, #B-2244 CAMP LEJEUNE, NC.		
CONTRACTOR: RAMSEY A/C CO., INC.		DATE: 2-6-86	DRN. BY NEG
REVISIONS: 2-6-86 - "AS BUILT"		PC- 4499 E- 927	SHT. 2 OF 5

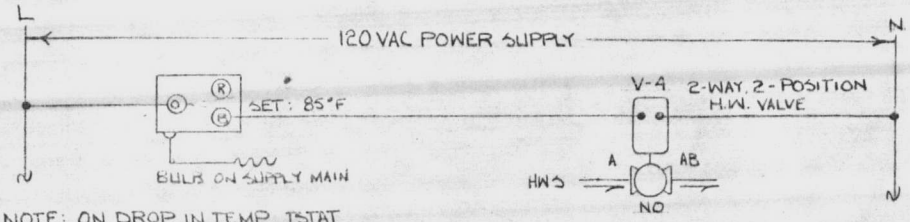

NOTE: ON DROP IN TEMP. TSTAT COMPLETES CIRCUIT AND THE VALVE CLOSES TO PREVENT COLD WATER IN UNIT HEATER COILS.

LAUNDRY UNIT HEATER COIL PROTECTION CONTROL

(1) SET PER BLDG

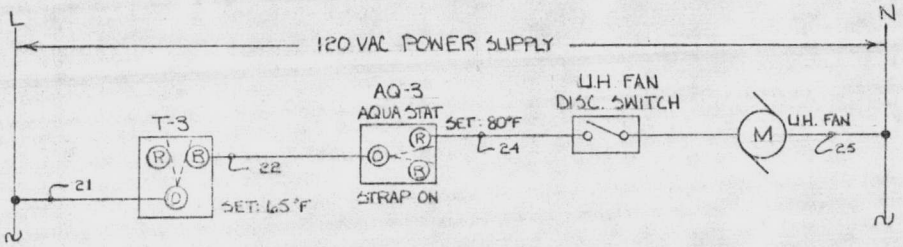

LAUNDRY UNIT HEATER CONTROL

(3) SETS PER BLDG

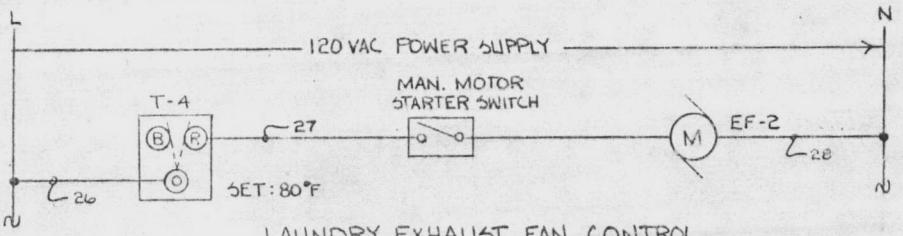

LAUNDRY EXHAUST FAN CONTROL

(3) SETS PER BLDG

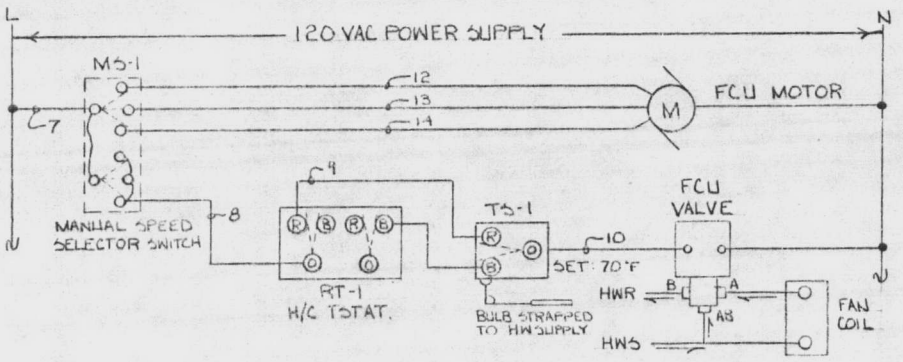

LOUNGE FAN COIL UNIT CONTROL

(3) SETS PER BLDG

NOTE: TYPICAL FOR OFFICE FAN COIL UNITS W/THE EXCEPTION OF THE MANUAL SPEED SELECTOR SWITCH AND THE TSTAT (RT-1), WHICH ARE CONTAINED IN EACH UNIT

Jay Johnson Company, Inc. A Sales Representative for Carrier-Columbia	JOB NAME, LOCATION	UNACCOMANIED ENLISTED PERSONNEL HOUSING, #B-2244 CAMP LEJEUNE, NC	
CONTRACTOR: RAMSEY A/C CO., INC.	DATE: 2-6-86	DRN. BY NEG	
REVISIONS: 2-6-86 - "AS BUILT"	TC- 4499	E- 927	SHT. 3 OF 5

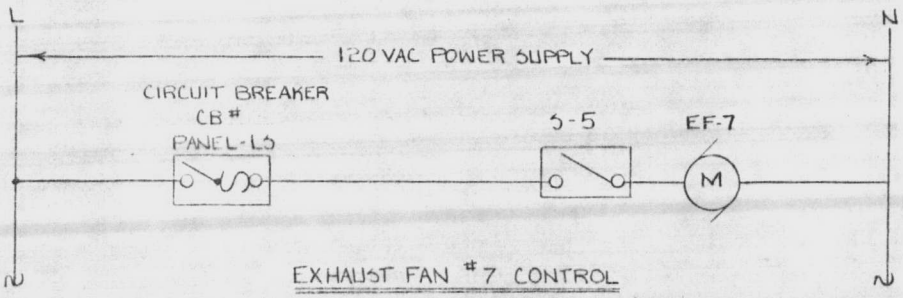

EXHAUST FAN # 7 CONTROL

(1) SET PER LIFT STATION

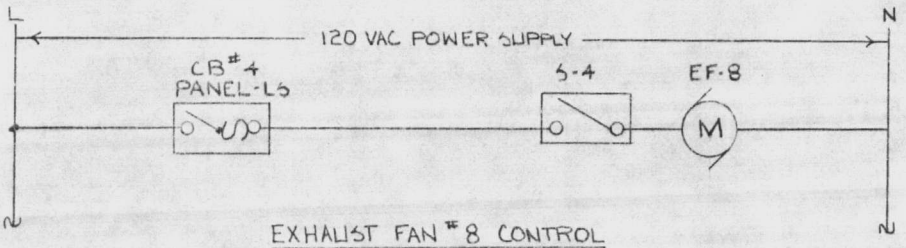

EXHAUST FAN # 8 CONTROL

(1) SET PER LIFT STATION

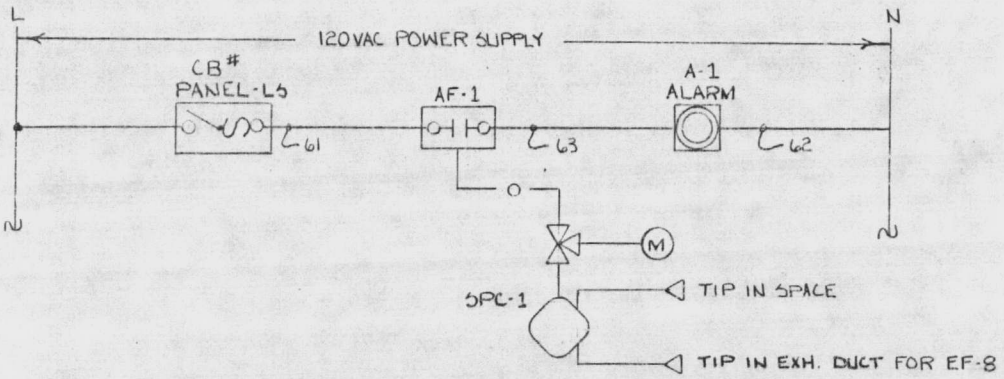

STATIC PRESSURE DETECTION AND ALARM CONTROL

(1) SET PER LIFT STATION

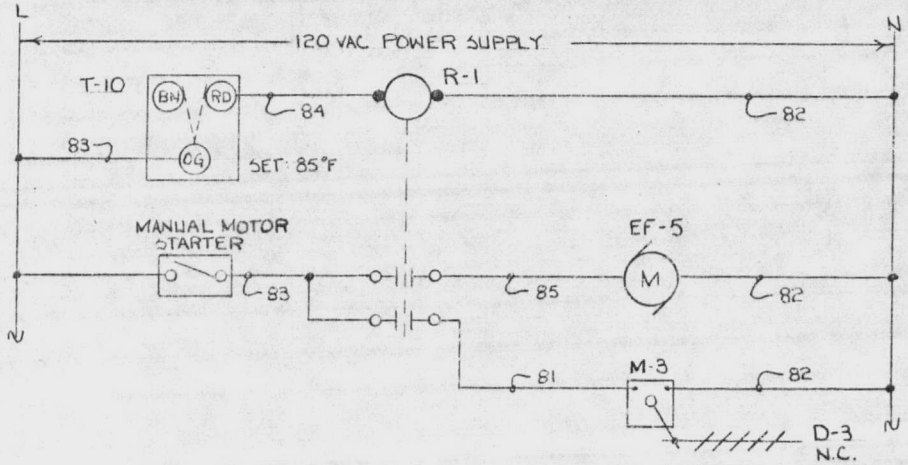

EXHAUST FAN # 5 AND DAMPER CONTROL

(1) SET PER LIFT STATION

Jay Johnson Company, Inc. A Sales Representative for Barber-Colman — 1612 Oberlin Road, Raleigh NC 27604	JOB NAME, LOCATION: UNACCOMANIED ENLISTED PERSONNEL HOUSING, #B-2244 CAMP LEJEUNE, NC	
CONTRACTOR: RAMSEY A/C CO., INC.	DATE: 2-6-86	DRN. BY NEG
REVISIONS: 2-6-86 - "AS BUILT"	TC- 4499 E- 927	SHT. 4 OF 5

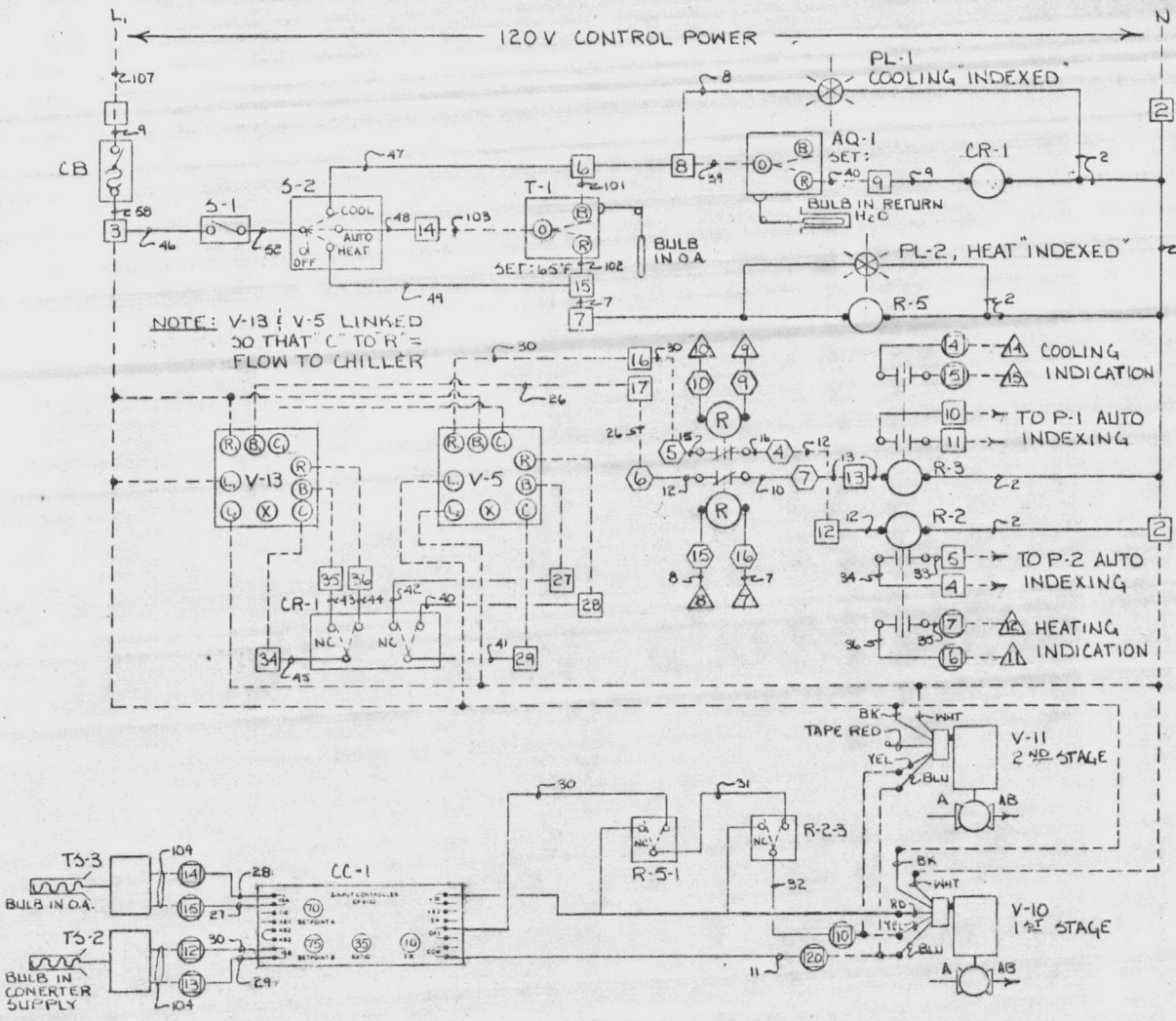

SYSTEM CHANGEOVER INDEXING AND CONVERTER CONTROL

(1-SET, LOCATED IN MECHANICAL EQUIPMENT BLDG.)

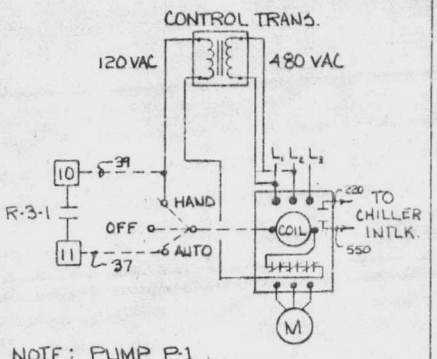

NOTE: PUMP P-1 STARTER IS PARTIALLY WINDING TYPE.

PUMP P-1 CONTROL

(1-SET PER MECH EQUIP BLDG.)

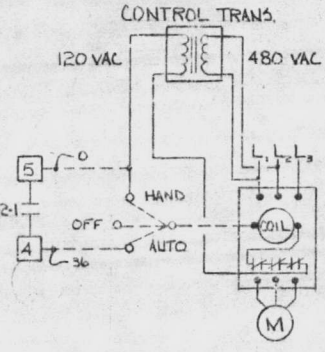

PUMP P-2 CONTROL

(1-SET PER MECH. EQUIP BLDG.)

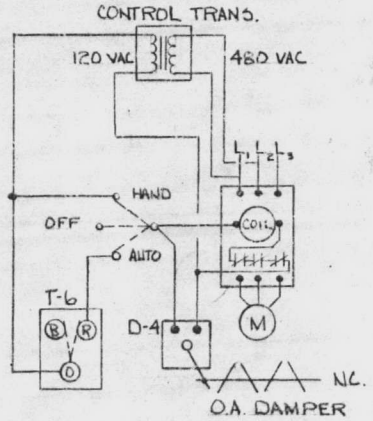

EXHAUST FAN #4 CONTROL

(1-SET PER MECH. EQUIP. BLDG.)

LEGEND:

- WIRING INSIDE CONTROL PANEL
- WIRING EXTERNAL TO CONTROL PANEL
- LINE VOLTAGE TERM. IN CONTROL PANEL
- LOW VOLTAGE TERM IN CONTROL PANEL
- DTC PANEL TERMINAL
- DTC INTERFACE PANEL TERMINAL
- WIRE NUMBER

Jay Johnson Company, Inc. A Sales Representative for Barber-Colman	JOB NAME, LOCATION: UNACCOMPANIED ENLISTED PERSONNEL HOUSING, # B-2244 CAMP LEJEUNE, NC		
CONTRACTOR: RAMSEY A/C CO., INC.		DATE: 2-12-86	DRN. BY NEG
REVISIONS: 2-12-86 - "AS BUILT"		TC- 4499	E- 927 SHT. 5 OF 5

BARBER COLMAN COMPANY **SUBMITTAL** **Environmental Systems**

DATE July 27, 1984

PROJECT: N-62470-82-B-2244
NAVFAC SPEC# 05-82-2244
UEPH, Marine Corps Base
Camp Lejeune, NC
CONTRACTOR: Ramsey Heating & A/C
Jacksonville, NC

TC-4499/E-927

Per Section 15901 - Space Temperature Control Systems

Submittal includes data on hardware, control diagrams, equipment schedules, control sequence, control panel details and data terminal panel details.

Operating and Maintenance Manuals and operating instructions will be sent upon completion based on AS BUILT conditions.

"It is hereby certified that the (material) (equipment) shown and marked in this submittal, shop drawings, catalog cut(s), etc., and approved/proposed to be incorporated into Contract Number N62470-82-C-2244 is in compliance with the contract drawings and specifications, and can be installed in the allocated space, and is ___ approved for use ___ submitted for Government approval.

Authorized Reviewer _____ Date 10/1/84

Signature CQC Rep _____ Date 10/9/84

PLEASE RETURN SUBMITTAL TO Jay Johnson Company, Inc. 1612 Dixie Trail Raleigh, NC 27607
SUBMITTING OFFICE ADDRESS CITY

JHJ/mh

Barber-Colman Company
1300 Rock Street, Rockford, Illinois, U.S.A., 61101

LITHO IN U.S.A.

July 27, 1984

UEPH - 2244 - INDEX OF DRAWINGS

PAGE #	TITLE
1	LIFT STATION CONTROLS
2	COMPRESSOR AIR SUPPLY SYSTEM
3	BARRACKS AHU CONTROL LOGIC
4	BARRACKS MISCELLANEOUS CONTROL
5	BARRACKS AHU PANEL
6	BARRACKS DTC PANEL
7	BUILDING 441-SYSTEM CHANGEOVER-INDEXING & CONVERTER CONTROL
8	BUILDING 441-CHILLER CONTROL AND PROGRAMMING
9	BUILDING 441-INTERNAL CHILLER CONTROL
10	BUILDING 441-CONTROL PANEL
11	BUILDING 441-INTERIOR CONTROL PANEL
12	BUILDING 441-DTC PANEL
13	BUILDING 441-EMCS DETAILS
14	BARRACKS EMCS DETAILS
15	DTC TERMINAL SCHEDULE

SEQUENCE OF OPERATION
FOR
UEPH, CAMP LEJEUNE, NC

Per 3.6.1. Heating/Cooling Control (System - Bldg. 441)

S-1 - "ON-OFF" Switch energizes system.

S-2 - "COOL-AUTO-HEAT" Selects mode.

Thermostat T-1 with bulb in OA set at 65° indexes for heat/cool operation. Cool and heat indicating lights determine INDEXED position.

When heating is indexed, the heat index relay R-5 is energized/heat index light is on.

With CR-1 de-energized-changeover valves V-1 and V-3 position for H.W. flow and relay R-5 allows converter (control) operation.

Hot water pump operates when valves position to energize R-2.

To change to cooling - switch S-2 or thermostat T-1 first indexes to cooling which turns on cool index light - heat index light goes off.

Relay R-5 drops out to close converter control valves, and water circulation continues with H.W. pump until temperature cools to setting of AQ-1.

At this time changeover relay CR-1 energizes to position main changeover valves V-1 and V-3 to cooling flow. When both are properly positioned, relay R-2 is de-energized. Relay R-3 energizes to start C.W. circulating pump and allow operation of chillers by dual chiller operating program.

Per 3.6.2. Chiller Operation and Programming

Indexing for heating or cooling operation is as previously described.

When chilled water pump (P-1) is permitted to operate by EMCS and indexing, flow switches allow respective chillers to operate from sequencer and control program as follows:

Each duplex chiller unit is controlled in 4 steps (solenoid valves and unloaders) with a respective lead lag switch in each duplex unit by the chiller manufacturer.

Each control sequencer responds to return water temperature and input from set point adjuster for either local or remote (EMCS) temperature level. Voltage level is input through sequencer and lead lag switch to determine which unit operates first and operate lag unit on return temp demand.

Stability and flexibility are permitted by adjustment of set points on respective controllers and adjustments and differential settings on sequencer.

Per 3.6.3. Hot Water Control

An outdoor reset controller (TC-1) with sensors in water leaving converter and in outside air, modulates two steam regulating valves V-7 and V-8 in sequence to maintain leaving water temperature or predetermined schedule.

When H.W. pump and heating is not indexed ON, an override relay causes both valves to go to closed position.

Per 3.6.4. Fan Coil Units

Changeover thermostat (TS-1) and duplex heating-cooling thermostat (RT-1) shall control water flow thru each fan coil unit by positioning two position 3 way valve (V-5). TS-1 with element in supply water set at 65°, indexes for heat when temperature is above ~~650~~ 65°, and cooling below 65°. Fan operation is manual from multi speed switch (MS-1). S.L.

Per 3.6.5. Laundry Room Control

Cooling thermostat (T-4) shall start exhaust fan (EF-2) when temperature exceeds 80° F.

Heating thermostat shall energize unit heater fan when temperature drops below 65° F.

Strap on aquastat shall prevent unit heater from operating if temperature is below 80° F.

An indexing thermostat with bulb in supply main set at 80° F. shall cause valve (V-4) serving unit heaters to close if main temperature is below 80° F.

Per 3.6.6. Mechanical Equipment Building (441) Exhaust Fan

On rise in temperature above setting (85°) of thermostat (T-6), fan shall start and outside air intake damper (D-4) shall open. On drop, reverse shall occur.

Per 3.6.7. Air Handler Unit Control

Typical for each of 6 per Building, Units shall be operated from HAND-OFF-AUTO selector switch. In AUTO, EMCS index relay will allow operation.

Per 3.6.7.1.

AHU operation shall be indexed for heating or cooling by thermostat (AQ-2) with bulb in CW/HW supply piping. When supply temperature is above 85°, system shall be indexed for heating. Below 65° F., the system shall be indexed for cooling.

Per 3.6.7.2.

With AHU operating and system indexed for heating, return air temperature transmitter (TTR) shall reset the discharge air temperature transmitter (TTD) through action of 2 input controller (RC) to position 3 way valve (V-6) supplying H.W. to coil.

Per 3.6.7.3.

With AHU operating and system indexed for cooling, discharge air temperature transmitter (TS-6), through action of relay (CR-2) positions 3 way valve supplying C.W. to coil, maintains 55° constant temperature.

Per 3.6.7.4.

A low limit thermostat (TLL) with bulb in mixed air stops AHU fan at 38° F.

Per 3.6.7.5.

A high limit thermostat (THL) with element in return air will stop AHU fan at 135° F.

Per 3.6.8.-Room Control

With the system indexed for heating, the room thermostat (T-5) shall act in RA mode and on fall in temperature shall increase its branch line pressure to modulate the N.C. TAB supply air damper open while simultaneously closing the N.O. room return recirculating damper.

With the system indexed for cooling, the room thermostat (T-5) shall act in D.A. mode and on rise in temperature, shall increase its branch line pressure, to modulate the N.C. TAB supply air damper open while simultaneously closing the N.O. room return (recirculating) damper.

S.C.

Per 3.6.9. AHU Static Pressure Control

A static pressure control (SPC) with sensing (high pressure) tip in supply air plenum, and tip (low pressure) in AH equipment room, shall act on increase in differential in D.A. manner to open the N.C. bypass damper (M-1) to maintain adjustable setpoint.

Per 3.6.10. Hot Water Storage Heaters

Steam control valves for domestic hot water tanks are self contained. Tempering water valve is also self contained.

Domestic water recirculating pump P-3 is controlled from aquastat (T-8) located in return, set at 110° F. to cycle pump on temperature drop.

Per 3.6.11. EF-1 Exhaust Fan Control

With hgih limit thermostat (T-11) and disconnect switch closed, exhaust fan runs continuously.

Per 3.6.12.1. EMCS - Mechanical Building M-441 Chilled/Hot Water Supply and Return

Temperature sensors located in supply and return mains are connected to inputs of TSP-8101 transmitters to give 1-11 VDC signal out over 200° temperature span.

Flow transmitter located in return supplies a 4-20 mA signal at flow rates up to 500 GPM.

Chiller #1

Start-stop relay in DTC inputs signal to chiller control panel.

Alarms status relays in DTC monitors alarm contacts in chiller control package.

Chilled water reset - Control point of chiller temperature controller to be reset by analog input to data terminal cabinet from FID.

Chiller#2 - Similar to Chiller #1

Steam Line - Steam flow transmitter senses ΔP across orifice in 4" HPS and transmits 4-20 mA signal at flow rates up to 5297 lbs/hr.

Electrical Energy - Current power computer (PC-1) with 0-5 amp. input from current transformers produce 1 to 11 VDC output for determining amps for ACC-1, ACC-2, P-1 and P-2.

Monitor Heat or Cool Control Position

Binary input from heat and cool operating relays wire to DTC to indicate system operation.

Pumps #1 and #2 - Status is input from auxiliary switches on starters. Start stop operation is input from FID to DTC to override to shut down for demand limiting.

Per 3.6.12.2. - EMCS for Buildings M-430, M-435, M-440, M-445 & M-450

Temperature of supply and return air to each AHU is sensed by TS and input to temperature transmitter. Output is 1-11 VDC over 200° F.

Start-stop relays for each AHU override to prevent fan operation, for demand limiting and duty cycling.

Fan status is input from auxiliary contact on fan starter.

Humidity transmitters (6 per building) output 1-11 VDC at humidity range of 20-80% RH.

Per 3.6.12.2 - Continued

Terminal Blender Control

Temperature at one point per AHU is transmitted as 1-11 VDC to data terminal cabinet.

High and low temperature selectors output a single high signal and single low signal from DTC to future FID.

Pneumatic Air Source

With the alternator in position A, a drop in pressure to 80 psi makes PE-1 which starts lead compressor (comp. 1). On a further drop in pressure to 60 psi, PE-2 makes and lag compressor (comp. 2) is started. On a rise in pressure above 60 psi, PE-2 breaks and lag compressor shuts off. On a further rise above 80 psi, PE-1 breaks and lead compressor shuts off. Alternator reverses to B position when coil is de-energized. On a drop in pressure on next cycle, compressor 2 is lead and compressor 1 is lag.

EQUIPMENT SCHEDULE

CUSTOMER: Ramsey Heating & Air Cond. Co.
Jacksonville, NC

JOB NAME: UEPH
Camp Lejeune, NC

DATE: July 27, 1984

REF.# TC-4499/E-927

MARK	QTY.	PART NUMBER	FEATURES	FUNCTION	LOCATION
		AIR COMPRESSOR - TYPICAL FOR EACH OF 5 FOR DUAL PRESSURE CONTROL AIR SOURCE			
CAC	1	K 212-7-00-4	1 HP, Duplex 208-60-3	Duplex control air compressor w/~~60~~ 80 gallon tank, 3.8 CFM@100 PSI	Mechanical Equipment Room where shown
		including: Belt guard, 3 PH, 200 volt motors, magnetic starters, intake filter, automatic alternator, pressure switches, intake mufflers, safety valve, tank drain & outlet valve on ASME tank.			
AD	1	#8010 Hankinson	1/6 HP, 115 VAC	Refrigerated air dryer package w/oil filter, by pass valve & gauges	Near Compressor
V-2	1	VK-9313	½" OD 3 way 5-10 PSI	3 way air valve	
EP-3	1		115 VAC	Index pilot valve	
PR-15	1			15 PSI RED valve	
PR-22	1		S.L.	22 PSI RED valve	
AQ-2	1	TC-4111		Index air source for summer/winter operation	

AIR COMPRESSORS SHALL BE SIZED FOR 50% OPERATION

TB/mh

EQUIPMENT SCHEDULE

CUSTOMER: Ramsey Heating & A/C
Jacksonville, NC

JOB NAME: UEPH (N62470-82-B-2244)
Camp Lejeune, NC

DATE: July 27, 1984

REF.# TC-4499/E-927

MARK	QTY.	PART NUMBER	FEATURES	FUNCTION	LOCATION
		FOR EACH OF 6 A.H.U. - TYPICAL PER BARRACK			
S-3	1	SPST w/c.o.	H-O-A	Fan select switch	
TLL	1	TC-5141	38°F, 20' cap.	Freezestat	Bulb in mixed air
THL	1	TA-3433	135°F	Firestat	In return air
S-8	1	SPST		Panel disconnect	In panel
V-6	1	VK-9313	1¼", 3-way	H/C control valve	At coil
RC	1	RKS-3002	2 input	Temperature controller	In panel
TTR	1	TKS-9014	0-100°	Return temperature transmitter	In return air
TTD	1	TKS-9017	50-150°	Supply temperature transmitter	In supply air
TS-6	1	TKS-9014	0-100°	Supply temperature transmitter	In supply air
CR-2	1	AK-50301		H/C changeover relay	In panel
SPC	1	PP-3013 w/static sensing tips	Direct acting	Differential pressure controller	Near A.H.U.
M-1	1	MK-4411 w/linkage	Normally closed	Bypass damper actuator	At bypass damper
M-2	1	M-836	24VAC, N.C.	O.A. damper actuator	At O.A. damper
D-1	1	16" x 16"	Opposed	Bypass damper	At by pass location
D-2	1	14"w x 12"h	Parallel	O.A. damper	In O.A. intake duct
		AT-532-222-1-01	.0075	Restrictor	Near AHU

JHJ/tm

EQUIPMENT SCHEDULE

CUSTOMER: Ramsey Heating & A/C
Jacksonville, NC

JOB NAME: UEPH (N62470-82-B-2244)
Camp Lejeune, NC

DATE: July 27,1984

REF.# TC-4499/E-974

MARK	QTY.	PART NUMBER	FEATURES	FUNCTION	LOCATION
		MISCELLANEOUS BARRACKS CONTROLS - TYPICAL PER BARRACK			
T-5	96	TK-1735	15psi RA 22psi DA	Dual pressure, dual temperature thermostats	In rooms for TAB units
T-11	1	TA-3432 S.L.	125°F	Firestat	Exhaust fan EF-1
RT-1	4	TC-1161-479 → WHERE IS SUBMITTAL ?		H/C thermostat for fan coil units	In spaces
TS-1	4	TC-4111	SPDT, 65°F	Indexing thermostat	Bulb strapped on supply pipe
V-5	4	VA-3403	½", 115VAC sweat	3-way control valve	At fan coil units
V-4	1	VA-9211	1", 115VAC, N.O.	Heating index valve	In branch to laundry unit heaters
T-2	1	TC-4111	80°	Index thermostat	Bulb strapped to main
T-3	3	TA-1101	65°F	Make on drop	In laundry space
AQ-3	3	TC-2974	80°F	Make on rise	On supply pipe
T-4	3	TC-1103	80°F	Exhaust fan control	In laundry space

JHJ/tm

EQUIPMENT SCHEDULE

CUSTOMER: Ramsey Heating & A/C
Jacksonville, NC

JOB NAME: UEPH (N62470-82-B-2244)
Camp Lejeune, NC

DATE: July 27, 1984

REF.# TC-4499/E-927

MARK	QTY.	PART NUMBER	FEATURES	FUNCTION	LOCATION
		LIFT STATION CONTROLS			
T-9	2	TC-1104 → WHERE IS SUBMITTAL	40°F	Electric UH control	In space
S-5	1			Manual fan switch	For EF-7
AF-1	1			Air flow switch	For EF-7
	1			Alarm	In space
S-4	1			Manual fan switch	For EF-8
T-10	1	TC-1103 ?	85°F	Space thermostat	For EF-5
M-3	1	M-		Exhaust fan damper actuator	For EF-5
R-1	1		DPST, 115	Control relay	
D-3	1	24W x 42"H	Parallel	Blade damper	In outside wall
		BARRACKS CONTROL & EMCS PANELS			
		Control & EMCS Devices			
P-L	6	AE-631	24"W x 32"H	For control & EMCS Tramsmitters	Convenient to each A.H.U.
P-X	2	AD-8910		Enclosure	Convenient to DTC
DTC	1	AE-631	24"W x 32"H	For EMCS signal connections to future fid panel	In first floor equipment room

WHERE ARE SUBMITTALS ?

S.L.

.THT/tm

EQUIPMENT SCHEDULE

CUSTOMER: Ramsey Heating & A/C
Jacksonville, NC

JOB NAME: UEPH (N62470-82-B-2244)
Camp Lejeune, NC

DATE: July 27, 1984

REF.# TC-4499/E-927

MARK	QTY.	PART NUMBER	FEATURES	FUNCTION	LOCATION
		EMCS FOR EACH LOCAL PANEL OF 5 BARRACKS - Typical			
TS	2	TS-8201	1K	Supply & return temperature sensors	At each A.H.U.
TT-2	2	TSP-8111	1-11 VDC	Temperature transmitters	In local control panels
	1	AE-204 → WHERE IS SUBMITTAL?	115/24VAC	Transformer	In local panel
	1		SPST, 24VAC	Fan relay	In local panel
	1	PC-301 S.L.		Differential pressure switch	
TT-12	1	TS-8101	1K	Space temperature sensor	In selected space
TT-3	1	TSP-8111	1-11 VDC	Space temperature transmitters	In local panel
	1	HS-8101		Humidity transmitter	In selected space
	1	AH-102		Humidity element	In sensor
SS-H SS-L	2	AD-8201	High-Low	Signal selector	In P-X
		TERMINALS AS SHOWN ON	Schedule		
		FOR DTC PANEL			
		TERMINALS AS SHOWN ON	Schedule		

JHJ/tm

EQUIPMENT SCHEDULE

CUSTOMER: Ramsey Heating & A/C

JOB NAME: UEPH (N62470-82-B-2244)
Camp Lejeune, NC

DATE July 27, 1984

REF. #TC-4499/E-927

MARK	QTY.	PART NUMBER	FEATURES	FUNCTION	LOCATION
		BUILDING 441 - CONTROLS FOR SYSTEM			
S-1	1	SPST		System on-off	In local panel
S-2	1	SP3T		Cool-Auto-Heat	In local panel
T-1	1	TC-4111 w/ AT-211		Outdoor index thermostat Bulb shield	Bulb in Outside air On Outside air bulb
R-5	1		SPDT	Converter control relay	
AQ-1	1	TC-4111 w/ AT-206		Limit aquastat Bulb well	In return water
V-3	2	VC-6664	3-way, 115VAC	Changeover valves	In supply and return locations
V-1	4		115VAC	Indicating lights index & operation	In local panel door
CR-1	1		DPDT	Changeover relay	In panel
R-2	1		DPDT	Heating operation relay	In panel
R-3	1		DPDT	Cool operation relay	In panel
V-7	1	VS-92	2", 115VAC spring return	Converter valve	At converter
V-8	1	VS-92	2½", 115VAC spring return	Converter valve	At converter
TC-1	1	CP-8102	2 input	H.W. reset controller	In local panel
TS-2	1	TS-8201 w/ AT-215	1K 3/4"	H.W. supply sensor bulb well Bulb well	In H.W. converter
TS-3	1	TS-8501	1K	Outdoor sensor	In outside air
	1		DPDT	Shutdown relay	In panel

WHERE ARE SUBMITTALS S.L.

WESTMINSTER COMPANY
A Weyerhaeuser Company
Eastern Region
308 Western Boulevard
P. O. Box 1167
Jacksonville, North Carolina 28540
919-353-7000

August 23, 1985

Department Of The Navy
Officer in Charge of Construction
Naval Facilities Engineering Command Contracts
Camp Lejeune, NC 28542

Attention: Lt. Phil Ham
AROICC

Dear Lt. Ham,

I would like to request permission for Westminster and Subcontractors to work Saturday, August 24, 1985 and Sunday, August 25, 1985 We will be setting wardrobes, setting bathroom accessories, putting on finish hardware, painting, ceramic tile, putting floor tile in bathroom, hanging light fixtures and setting plumbing fixtures.

Thank you for your consideration.

Sincerely,

J.C. McOmber

J.C. McOmber
Job Superintendent
Camp Johnson

JCM/jwa

Royal State will have a dozer leveling out the jobsite.

23 August 85

This office will allow weekend work, however, all contract documents must be complied with.

P. L. Ham
AROICC

EQUIPMENT SCHEDULE

CUSTOMER: Ramsey Heating & A/C
Jacksonville, NC

JOB NAME: UEPH (N62470-82-B-2244)
Camp Lejeune, NC

DATE July 27, 1984

REF.# TC-4499/E-927

MARK	QTY.	PART NUMBER	FEATURES	FUNCTION	LOCATION
		BUILDING 441 - CONTROLS FOR SYSTEM (cont.)			
T-6	1	TC-1103	85°F	Exhaust fan EF-4 control	On wall in building 441
R-4	1		SPST-115	Control relay	
M-4	1	MA-418 w/linkage		O.A. intake damper actuator	
D-4	1		52"W x 64"H	O.A. intake damper	
C-1	2	CC-8111	115/20	Temperature controllers ACC1 & ACC2	In local panel
TS-4	2	TS-8201	1K	Temperature sensors	In C.W. return from each chiller
	2	AT-215	3/4"	Bulb wells	In C.W. return from each chiller
SQ-2	4	CC-8102	2 stage	Cooling sequencers	In local panel
S-6	1	DPDT		ACC1/ACC2 lead chiller	
SQ-1	1	AD-8122	2 output	Sequencer	In local panel
SA	1	AT-8522 S.L.		Setpoint adjuster	In local panel
S-S	1		PDT	Local/EMCS set point adjuster	In local panel
P-Y	1	AE-631 — WHERE IS SUBMITTAL?	24"W x 32"H	EMCS device panel	In building 441 where shown
TS-5	2	TS-8201 w/	1K	Temperature sensors	In supply & return mains
	2	AT-215	3/4"	Bulb wells	
TT-1	2	TSP-8111	1-11 VDC	Temperature transmitters	In panel P-Y
	4		SPST-24VDC	Start/ Stop relays for ACC1, ACC2, P1 & P2	In panel P-Y
PC-1		PC-8403	1-11 VDC	Current power computer for ACC1, ACC2, P1 & P2	In panel P-Y

EQUIPMENT SCHEDULE

CUSTOMER: Ramsey Heating & A/C
Jacksonville, NC

JOB NAME: UEPH (N62470-82-B-2244)
Camp Lejeune, NC

DATE: July 27, 1984

REF.# TC-4499/E-927

MARK	QTY.	PART NUMBER	FEATURES	FUNCTION	LOCATION
FSN	1	Data Industrial #220B	2"	Water flow sensor	In 6" H/CW main loop as shown
TR-1	1	Data Industrial #750		Analog output flow transmitter	On wall in building 441
	1	Aitken catalog #520	6 7/8" O.A., S.S.	Orifice plate for steam flow metering	Between flanges
	1	Aitken	4"	Weld neck orifice flanges	At flow sensing location point
	1	Robinson-Halpern 152 series	0-1.5 psi	Differential pressure transmitter	Convenient to flow orifice
T-8	1	TC-4111		Domestic H.W. circulating pump Temp. control	In domestic H.W. return line

JHJ/tm

T-4, T-10, T-6

General Instructions

TC-1101, TC-1102, TC-1103
Electric Room Thermostats
Two-Position

CONFORM TO MIL SPEC. MIL-S-29175

For low or line voltage on-off control of fan coils, fans, motor starters and contactors.

.SL

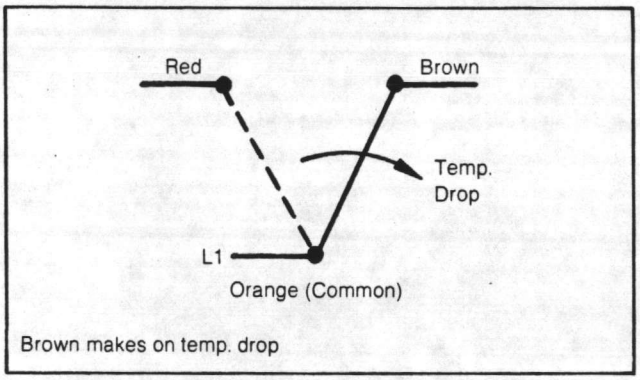

Brown makes on temp. drop

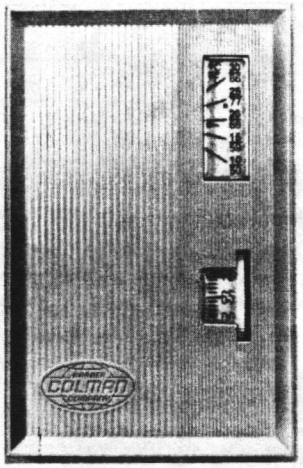

4⅜" H × 2⅞" W × 1⅝" D

Part Number	Control Dial Range*	Full Load Amps		Locked Rotor Amps		Pilot Duty (VA)
		24/120 Vac	240 Vac	24/120 Vac	240 Vac	
TC-1101	55-85°F (13-29°C)	4.4 Orange to Brown Lead	2.2 Orange to Brown Leads	26.4 Orange to Brown Lead	13.2 Orange to Brown Leads	40 @ 24 Vac
TC-1102	45-75°F (7-23°C)	3.0 Orange to Red Lead	1.5 Orange to Red Leads	18 Orange to Red Lead	9 Orange to Red Leads	210 @ 120/240 Vac
TC-1103	75-105°F (24-40°C)					

*Units marked in both °F and °C; dial stop pins included to limit dial range.

Bimetal operated snap action SPDT switch. Color coded 6" leads. Differential 2°F. Units have plastic covers as standard. Mounts on flush or surface switch box or directly to wall (24 volt only).

METAL COVERS WITH ALLEN HEAD SCREWS.

Dimensions: 4-3/8" high × 2-7/8" wide × 1-5/8" deep.

ACCESSORIES

AT-101	Lock cover kit
AT-104	Dial stop pins (pins included with each unit)
AT-136	Title plates (day, night, heat, cool)
AT-504	Plaster hole cover (small)
AT-505	Surface mounting base
AT-546	Auxiliary mounting plate
AT-602	Selector switch sub-base DP4T
AT-603	Selector switch sub-base one DP4T, one DPDT
AT-1103	Wire guard
AT-1104	Cast aluminum guard
AT-1105	Plastic guard
AT-1155	Plastic guard
AT-1165	Plastic guard
Tool-11	Calibration wrench
Tool-13	Contact burnishing tool

OPTIONS

Add "dash-number" (-XXX) suffix to base part number for desired option.

Standard

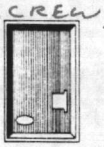
-400

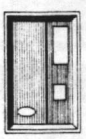
-401

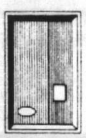
-402

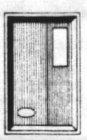
-403

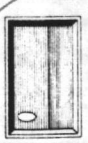
-404

-500 parallel heat anticipation 24V Standard Cover
-501 parallel heat anticipation 120V Standard Cover
-502 parallel heat anticipation 240V Standard Cover

-601 10°F night depression 120V Standard Cover†
-602 10°F night depression 24V Standard Cover†
-603 10°F night depression 240V Standard Cover†

†Normally, night depression is controlled by a centrally located time clock such as AE-174 or AE-178, or by selector switch sub-bases (AT-602 or AT-603).

INSTALLATION

Requirements

Physically, these thermostats require upright mounting on a properly flat vertical surface. Locate the thermostat where it will be exposed to unrestricted circulation of air which represents the average temperature of the controlled space. Do not locate the thermostat near sources of heat or cold, such as lamps, motors, sunlight or concealed ducts or pipes. The thermostat is designed for service in any normally encountered human environment.

Procedure

1. Pull all wires. (Use copper wire only.)
2. Make electrical connections to thermostat. Make all connections in accordance with the job wiring diagram and in compliance with national and local electrical codes. Class I wiring is required unless all circuits to contacts are powered from a Class II source. (See Page 3 for additional wiring diagrams.)
3. Remove thermostat cover and fasten thermostat to box or wall.
4. Attach thermostat cover.

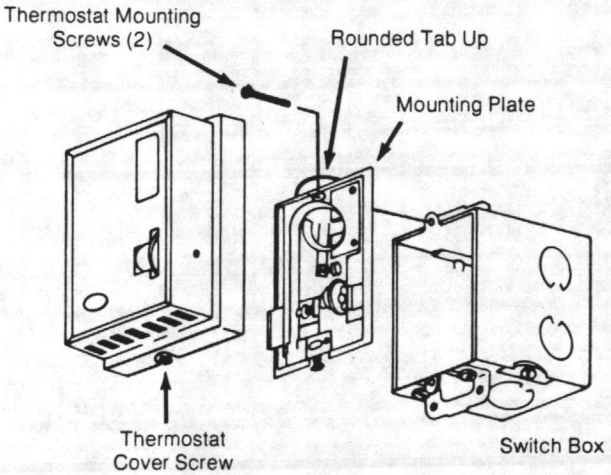

CHECKOUT

After installing a thermostat, make an initial check of the switching action. Verify the switch action by listening to and watching the switch contacts or by using a voltmeter between the proper sides of the switch.

1. Run the setpoint dial to a temperature above ambient. This should cause the thermostat to make a circuit between orange and brown leads.
2. Turn the setpoint dial setting down below ambient. This should cause the thermostat to make a circuit between orange and red leads.

CALIBRATION

All thermostats are calibrated at the factory and normally will not require any such attention. However, if recalibration is necessary for any reason, proceed as follows:

1. Turn off control power and power to night depression circuit, where applicable.
2. Set setpoint dial to correspond to actual stable room temperature, as read from an accurate thermometer.
3. Remove thermostat cover. Do not breathe on the thermostat or handle excessively as this will affect the accuracy of the final calibration.
4. If contact blade is made to the left (red) contact, with a small screwdriver, turn calibration screw counterclockwise (looking at head of screw) until blade makes to right (brown) contact.

   Note: Each complete turn of screw changes calibration approximately 15°F.

   Now turn screw very slowly clockwise until blade just makes the left (red) contact. Thermostat is now properly calibrated.

   If contact blade is originally made to the right (brown) contact, turn calibration screw slowly clockwise until element just makes the left (red) contact. Thermostat is now properly calibrated.
5. Replace thermostat cover.
6. Turn on control power.
7. Recheck calibration about 30 minutes later to be sure heat from handling of or breathing on bimetal element did not result in an erroneous setting.

MAINTENANCE

Be sure that the air convection holes in the thermostat cover do not become clogged or covered. This causes improper temperature sensing.

After long periods of continual use, it may become necessary to clean the contacts of any excess contact build-up. Before proceeding, be sure that either the electrical connections to the thermostat are disengaged or that the power to the circuit is broken. Now clean the contacts using Tool-13 contact burnishing tool.

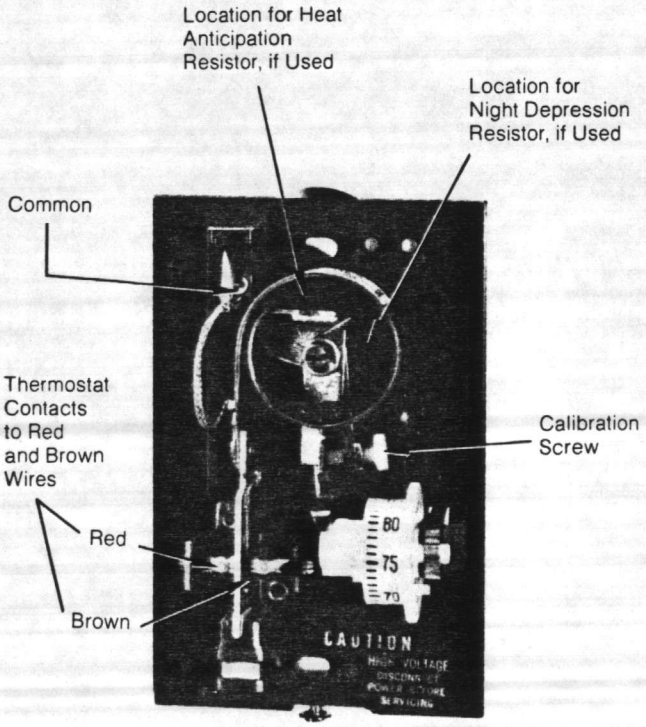

REPAIR

Field repair of the thermostat is not recommended. If the system is not operating correctly and the reason is traced to the thermostat, it should be replaced.

Typical of Parallel Heat Anticipation (heater size determined by voltage) with or without Night Depression

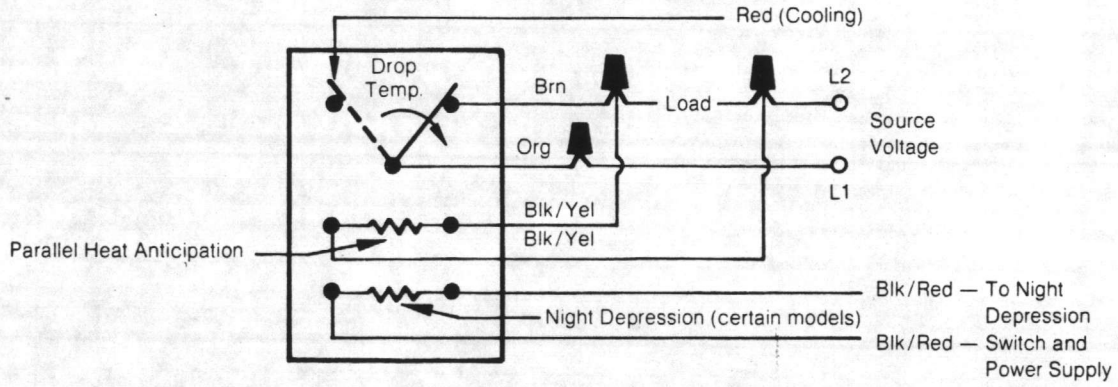

Typical of Series Heat Anticipation (heater size determined by ampere rating of load) with or without Night Depression

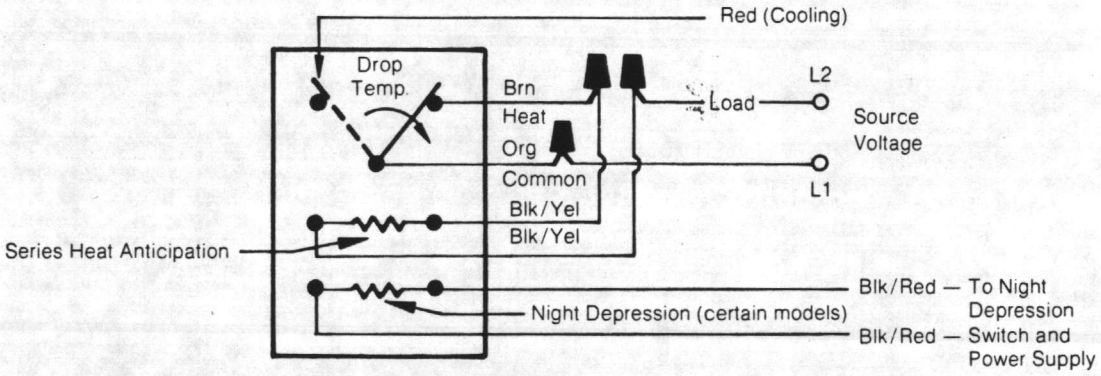

Typical Night Depression

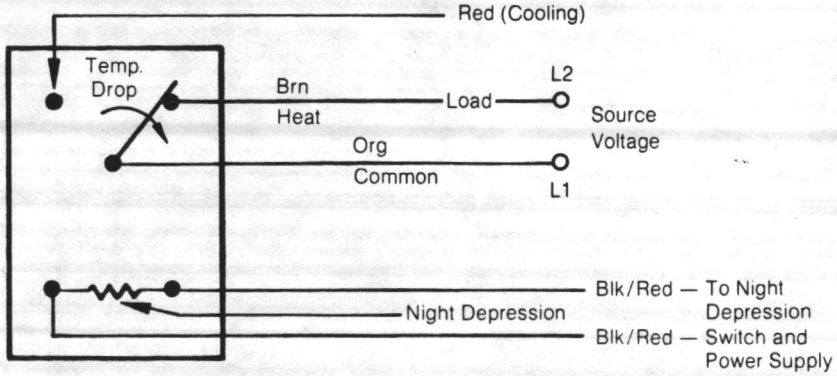

M-4

General Instructions

MA-305—MA-318
MA-405—MA-419
Oil Submerged Actuators

For two-position operation of dampers, valves and other equipment which requires the return to normal position upon power interruption.

SPECIFICATIONS

Two-wire circuit. Actuator shaft rotates cw 180° when power is applied. Spring returns actuator shaft ccw to original position when actuator is de-energized. Optional SPDT auxiliary end switch makes (or breaks) circuit at powered end of stroke. Ambient temperature limitations -40 to 136°F. 16 lb-in. actuators mounted in any position; 60 lb-in. must be mounted with output shaft horizontal. Allow 6 inches clearance above the actuator wiring compartment.

ACCESSORIES

Damper linkage accessories:

AM-111	Crank arm for 5/16" diameter damper shaft.
AM-112	Crank arm for 3/8" diameter damper shaft.
AM-113	Crank arm for actuator or 1/2" diameter damper shaft.
AM-115	Crank arm for 7/16" diameter damper shaft.
AM-116	Splined crank arm for actuator.
AM-122	Linkage connector straight type.
AM-123	Damper clip.
AM-125	5/16" diameter × 20" damper rod.
AM-125-048	5/16" diameter × 48" damper rod.
AM-132	Ball joint connector.
AM-301	90° mounting bracket.
AM-401	Explosion proof housing for damper or valve.

Valve linkage accessories for 60 lb-in. units only. Use on VB-9213, VB-9253, VB-9273, VB-9313 and VB-9323 valve bodies 1/2" to 2".

*AV-390	Common parts linkage kit.
*AV-91	Cam and plunger kit for 1/2" to 1-1/4" valves.
*AV-92	Cam and plunger kit for 1-1/2" to 2" valves.

*Order AV-390 plus appropriate AV-91 or AV-92 for complete linkage.

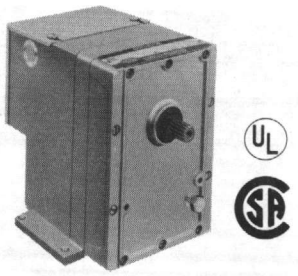

Typical Units

Auxiliary Switch Terminals on Optional Models

Cover Removed

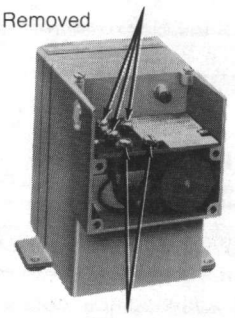

Power Terminals

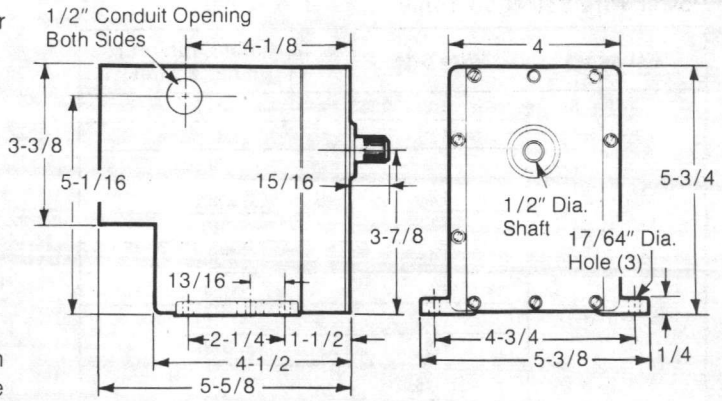

All Dimensions in inches

OPTIONS

Available 120, 208, 240 Vac; 50 or 60 Hz.

Actuator Part Number	Power Supply (Vac) 60 Hz	Aux.* Switch	Input (Watts)	VA	Rated Torque Lb-In.	No Load Timing† at 75°F Secs/180°	Nominal** Damper Area Sq. Ft.		Applications
							Parallel	Opposed	
MA-305	24	No	25	45	16	10	9	11	Damper
MA-305-500	24	Yes							
MA-405	120	No							
MA-405-500	120	Yes							
MA-406	208	No							
MA-406-500	208	Yes							
MA-407	240	No							
MA-407-500	240	Yes							
MA-318	24	No	70 Running 25 Holding	85 Running 45 Holding	60	20	33	43	Valve or Damper
MA-318-500	24	Yes							
MA-418	120	No							
MA-418-500	120	Yes							
MA-416	208	No							
MA-416-500	208	Yes							
MA-419	240	No							
MA-419-500	240	Yes							

*2 FLA, 12 LRA @ 24/120 VAC; 1 FLA, 6 LRA @ 240 VAC.
**Damper Ratings are Nominal and based on Standard (Not Low Leakage) Dampers at 1" W.C. Pressure and 2000 FPM Velocity.
†Spring Return Timing with Full Load Opposing Spring approximately 60 Sec.

LITHO IN U.S.A. 2-83

THEORY OF OPERATION

Run/Adjust

MA-305, 405, 406 and 407 units rotate 180° clockwise when energized and spring return counterclockwise to 0° when de-energized. The motor is assembled to a gear train and stalls at the end of the power stroke.

MA-318, 416, 418 and 419 have an end of travel switch which reduces the running input from 70 watts to 25 watts at the end of the clockwise rotation. Actuator must be linked to the load (i.e. damper), to allow the actuator on power stroke, full end of travel movement.

INSTALLATION

Procedure

Wiring Make all electrical connections in accordance with the job wiring diagram and in compliance with national and local electrical codes. Two 1/2-inch conduit knockouts are provided on actuator case.

Power Wire Selection Table

Actuator	Wire Size	Maximum Run (Ft.) (1 run has 2 wires)
MA-305	14	122
	12	191
	10	305
MA-405	14	2800
MA-406	14	2800
MA-407	14	2800
MA-318	14	44
	12	68
	10	110
MA-416 MA-418 MA-419	14	950
	12	1580

Opposite each model number and wire size is the maximum 2 wire run in feet for one actuator. To determine the maximum run when multiple actuators are used, divide the number of actuators into the corresponding maximum run.

Typical wiring for MA-305, 405, 406 and 407:

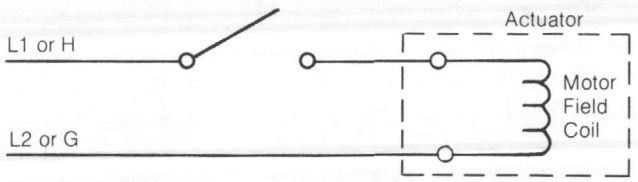

Actuator rotates 180° cw when controller contacts are closed. Actuator spring returns when controller contacts are open.

Typical wiring for MA-318, 416, 418 and 419:

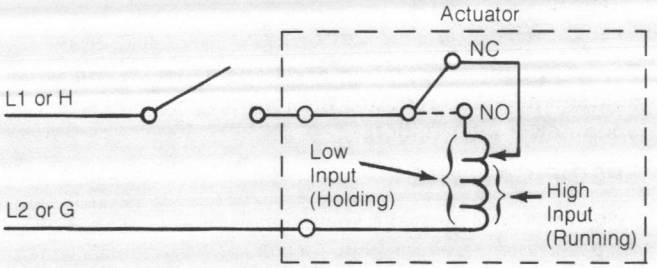

Damper Installation Figure above illustrates linkage for a 180° actuator operating an arm through a 90° arc. To fasten linkage proceed as follows:

1. Fasten linkage connector at end of driven crank shaft arm.
2. Fasten linkage connector at punch mark on actuator crank arm (about .707 of the radius).
3. Move damper to normal position and clamp connecting link to connectors.
4. Check adjustment for proper operation by running actuator and driven shaft between limits of travel.

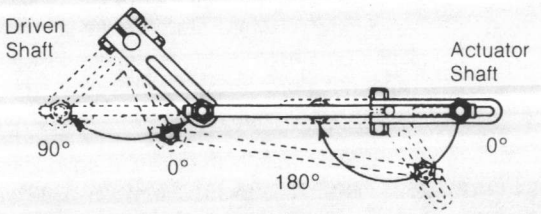

CAUTION

If crank arm does not provide proper travel, reset connecting link in linkage connector. NEVER ATTEMPT TO TURN THE ACTUATOR SHAFT WITH A WRENCH OR A CRANK. This may damage actuator gears.

Valve Installation The valve must be installed with the valve stem upright. Install all single-seat valves (unless directional arrow indicates otherwise) with pressure under the seat.

See AV-300 General Instruction sheet F-19068 for detailed instructions when used as valve actuator.

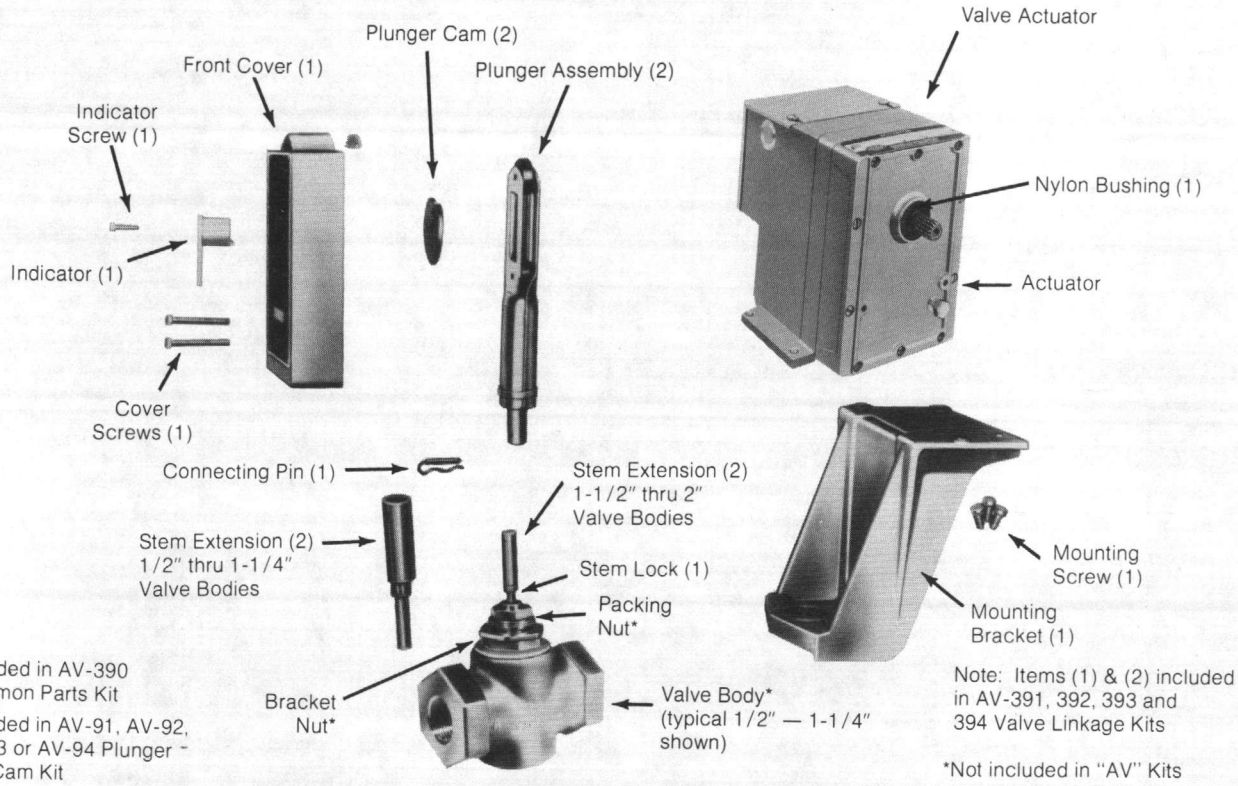

TYPICAL COMPONENTS FOR VALVE INSTALLATION

CHECKOUT

After the entire system has been installed, the following checks for proper operation can be made.

1. Be sure that the system power is connected and on.
2. Be sure controller (manual or automatic) is operating properly per system requirements.
3. When the controller (manual or automatic) energizes the actuator it will run to the end of the stroke (180° clockwise).
4. When the controller (manual or automatic) de-energizes the actuator, the spring will return the actuator shaft to its original position.
5. Action of auxiliary switch:
   - C made to N.C. when actuator is de-energized.
   - C made to N.O. when actuator is energized and reaches the end of stroke.

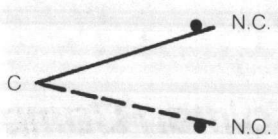

Auxiliary Switch

MAINTENANCE

A minimum of maintenance is required since the motor and gear train are submerged in oil for continuous lubrication and cooling and sealed in a die cast case. If necessary to refill the actuator with oil, always use Barber-Colman immersion oil, which is available in quart or one gallon cans (refill capacity — approximately 3/4 of a quart).

Normally, actuators are returned to the factory for reconditioning if the need arises. However, some field repairs can be performed. Replacement of gear train parts or return springs should not be attempted in the field. Refer to the repair parts list for parts and kits available.

Barber-Colman Company
ENVIRONMENTAL CONTROLS DIVISION

1354 Clifford Avenue
P.O. Box 2940
Loves Park, IL U.S.A. 61132-2940

F-6491-13 BK

LITHO IN U.S.A.

C-1

General Instructions

CC-8111
Differential Controller

DEVICE INFORMATION

The CC-8111 Differential Controller is a proportional controller which directly accepts either a 1000 Ohm sensor input(s), a 1 to 15 Vdc control signal, or a 135 Ohm slidewire input and produces a proportional voltage output signal which operates a relay giving two position output control. This device consists of two temperature bridges, a solid state control amplifier, a comparator amplifier and a relay output stage. The CC-8111 is used in systems where solid state temperature sensing is desired to control electrically actuated devices.

END-TO-END ERROR WITHIN ±2% ALLOWABLE DEVIATION OF OUTPUT SPAN S.L.

CC-8111

		Adjustable Functions				Pin Selectable Functions		
Part Number	Power Req. (50/60 Hz)	Setpoint "A"	Setpoint "B"	Diff. Range	Relay Dropout	Throttling Range	Authority Ratio	Relay Diff.
CC-8111-024	24	41 to 95°F 5 to 35°C	41 to 95°F 5 to 35°C	1 to 54°F Std. By Added Res. 1-400°F	2 to 12 Vdc (IV1 to Com)	3,6 or 9°F 1.6, 3.4 or 5°C	.5 .75 1.0 15.0 Aux.	.5 1.0 2.0 4.0 Vdc (IV1 to Com)
CC-8111-120	120							
CC-8111-240	240							

Units dual marked in °C and °F.

Figure 1. Part Number Selection and Function Chart

SPECIFICATIONS

1. **Controlling inputs** — Designated as input "A" and input "B".
   - A. Temperature — One or two 1000 Ohm resistance type temperature sensors (TS-8000 Series).
   - B. Slidewire transducer — 135 Ohms. Requires two resistors and connects to input "A" only. See input wiring diagrams No. 5 for further details.
   - C. Voltage signal — 1 to 15 Vdc. Requires removal of jumper between OP1 and IV1 terminals. Signal connected between IV1 (+) and COM (−) terminals.
2. **Outputs**
   - A. Relay SPDT with adjustable dropout and selectable differential of 0.5, 1, 2 and 4 volts.

Contact Rating	24 Vac	120 Vac	240 Vac
Amps (continuous)	1	1	.5
Amps (inrush)	10	10	5
Pilot duty sealed (VA)	25	125	125
Pilot duty inrush (VA)	250	1250	1250

Figure 2.

   - B. Voltage signal 2 to 15V with a 10 ma. capacity. Output terminals OP1 (+) to COM (−).
   - C. +20 −1.5, +1 Vdc with 35 ma. capacity. Supply can be used for powering other System 8000 controllers or adaptors.
   - D. +6.2 ±.5 Vdc with 4 ma. capacity. Supply can be used for powering System 8000 remote setpoint adjusters (AT-8100 Series) and auxiliary bridges (CN-8101, TS-8601).
3. **Supply inputs.** Requires 24, 120 or 240 Vac 50/60 Hertz depending on models selected, 4 V.A.
4. **External Screw Terminal Nomenclature**

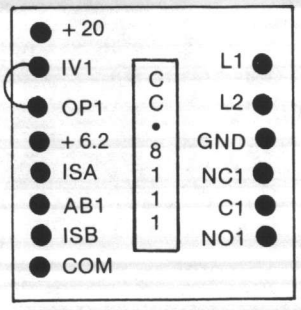

Figure 3.

NOTE
ON CC-8111-024, L1 & L2 ARE NOT PRESENT. TERMINALS ARE MARKED 24 Vac.

L1
L2 — Supply voltage 50/60 Hz.
GND — Chassis ground
NC1 — Normally closed relay contact
C1 — Relay common
NO1 — Normally open relay contact
+20 — +20 Vdc power supply
IV1 — 1 to 15 Vdc input (+)
OP1 — 2 to 15 Vdc output (+)
+6.2— +6.2 Vdc power supply
ISA — Input "A"
AB1 — Input, auxiliary bridges or setpoints
ISB — Input "B"
COM— System common (–)

5. Dimensions

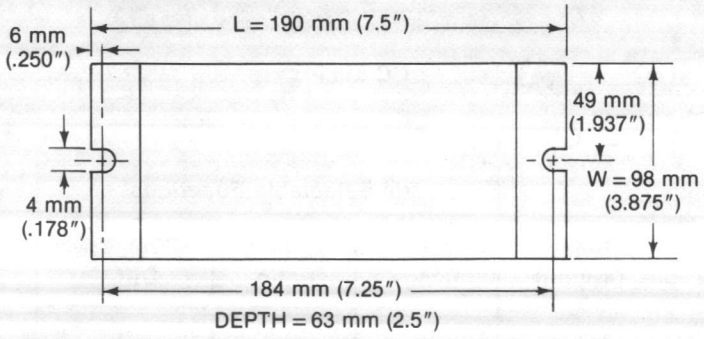

Figure 4

DEFINITIONS

1. **Mode of operation** — Either direct acting or reverse acting.

   A. Direct acting (D.A.) means that an increase in temperature at the sensor(s) causes the CC-8111 voltage output (OP1) to increase.

   B. Reverse acting (R.A.) means that an increase in temperature at the sensor(s) causes the CC-8111 voltage output (OP1) to decrease.

2. **Reset control action** — The direction of reset determines whether input "A" setpoint is reset upward or downward on a temperature decrease at input "B".

   A. Direct reset: A temperature decrease on input B resets input A setpoint downward.

   B. Reverse reset: A temperature decrease on input B resets input A setpoint upward.

ADJUSTMENTS & JUMPERS

See Figures 5 and 6.

INSTALLATION

1. **Mounting**

   The CC-8111 can be mounted in any position on any surface free from severe vibration or shock. Avoid locations where excessive moisture or corrosive fumes are present. The unit is provided with a 7-1/2 inch piece of 3-7/8 inch wide mounting track. Mounting hardware required (not provided) is two #8 screws. Ambient Limits: 40 to 140°F.

2. **Wiring Procedure**

   A. Codes: Make all electrical connections in accordance with job wiring diagrams and in compliance with national and local electric codes.

   B. Sensors: For sensor wiring, use No. 18 gauge twisted pair cable (6 turns per foot or equivalent) up to 200 feet. On runs over 200 feet, recalibrate the system or use larger diameter wire.

CAUTION

Shielded cable (Belden No. 8422 or equivalent) must be used when it is necessary to install the sensor leads in the same conduit with power wiring, or when it is known that high RFI/EMI generating devices are near. Ground the shield at the controller only on the COM (–) terminal.

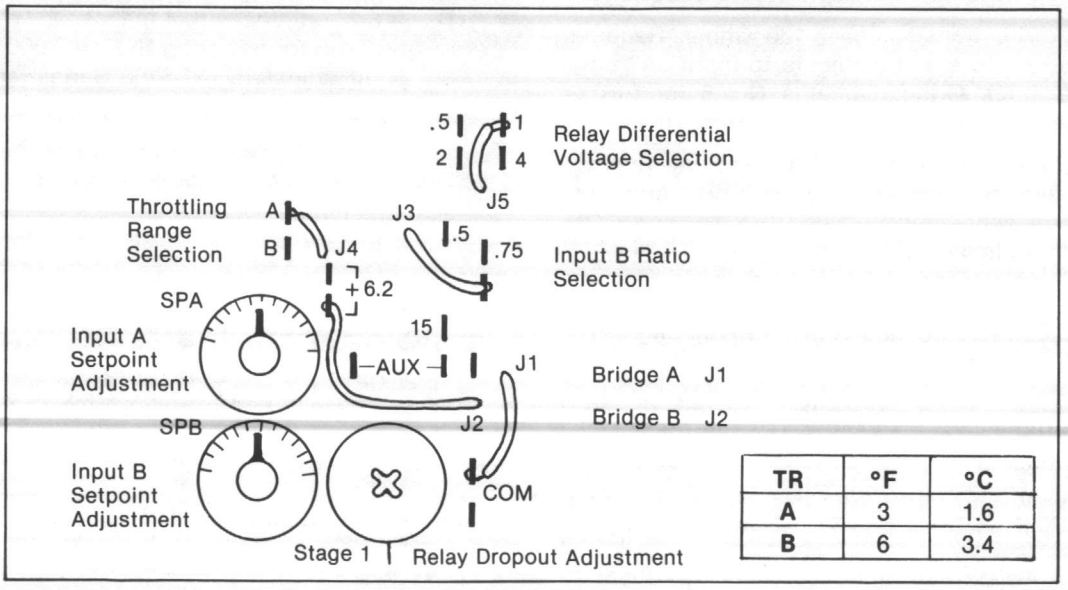

TR	°F	°C
A	3	1.6
B	6	3.4

Figure 5. Location Chart

Control / Sensor	Jumper	Range / Output Function	Jumper or Terminal Connection	Factory Set	Definition/Function	
Sensor A or Sensor B	—	Direct Acting	ISA / ISB to 6.2	—	Changes Res. when temp. changes	Balco Res. Pos. Temp. Coeff.
		Reverse Acting	ISA / ISB to COM			
Bridge A	J1	Direct Acting	COM	COM	Resistance voltage divider	Provides a voltage output relationship to sensor resistance
		Reverse Acting	6.2			
Bridge B	J2	Direct Acting	COM	6.2		
		Reverse Acting	6.2			
Setpoint A/B (SPA) (SPB)	—	5-35°C 41-95°F	—	70°F CAL	Input A/B temperature adjustment	Sensor A/B temp. at which OP1 to COM is 7.5 ±.5 Vdc
Ratio Authority (ISB only)	J3	.5 to 1	.5	1:1	Amount of temp. change of the B bridge required to reset the A bridge 1°F.	—
		.75 to 1	.75			
		1 to 1	1			
		15 to 1	15			
		Fig. 10	Aux.			
Throttling Range (T.R.)	J4	3°F (1.6°C)	A	A	Sets amplifier volts per deg. change at ISA input	Degrees temp. change at ISA input to produce a 3 Vdc change OP1 to COM
		6°F (3.4°C)	B			
		9°F (5°C)	A with AB shorted			
Relay Differential	J5	.5 Volt	.5	1	Volts change between pullin and dropout	—
		1 Volt	1			
		2 Volts	2			
		4 Volts	4			
Relay Dropout	—	2 to 12 Vdc	—	6V	Voltage where the relay drops out	C1 makes to NC1

Figure 6. Controller Setup and Definition Chart

OPERATION (Ref. FIG.7)

The CC-8111 Differential Controller consists of two temperature sensing bridges with setpoint, one proportional voltage control amplifier, one voltage comparator amplifier with relay output and two power supplies.

Input A and B sensors — Each requires a 1000 Ohm, at 21°C (70°F), resistance type (Balco wire) temperature sensor. The sensor increases in resistance with an increase in temperature (3.96 Ohms/°C or 2.2 Ohms/°F). These changes are detected by input A and input B bridges.

Input A and B bridges — Each bridge input accepts the sensor resistance signal. The bridge converts the resistance signal change into a dc millivolt signal change. The output from input A bridge is fed to the proportional control voltage amplifier. The output from input B bridge is fed to the ratio selection network. Each bridge can be connected for either direct or reverse acting bridge output. This is accomplished on input A bridge by connecting J1 jumper (red/blue) to the pin marked COM for direct acting or to the pin marked +6.2 for reverse acting. Input B bridge jumper J2 (white/blue) is connected to the pin marked COM for direct acting or the pin marked +6.2 for reverse acting. Input A and B bridges each have temperature setpoint adjustments.

Ratio selection network — Ratio selection networks allow selection of the desired input B bridge gain in order to accomplish resetting type control systems. The output of the ratio selection networks is fed to the proportional voltage control amplifier.

Proportional voltage control amplifier — The control amplifier sums and amplifies the millivolts output signals from input A and B bridges. The control amplifier output is a proportional 2 to 15 Vdc signal which is fed to the voltage comparator amplifier. The amplifier uses overall negative feedback as a means of gain adjustment. The gain adjustment becomes the throttling range adjustment of the CC-8111.

Comparator amplifier — This comparator receives the variable voltage from the control amplifier and compares it to the relay drop out and differential voltage settings. As these points are exceeded, the comparator changes state to operate the relay for two position output control action.

CALIBRATION

The CC-8111 Differential Controller normally requires no field calibration. The unit is factory calibrated for 7.5 ±.5 Vdc output between OP1 and COM, when input A and B sensors are at 21°C (70°F) temperature (1000

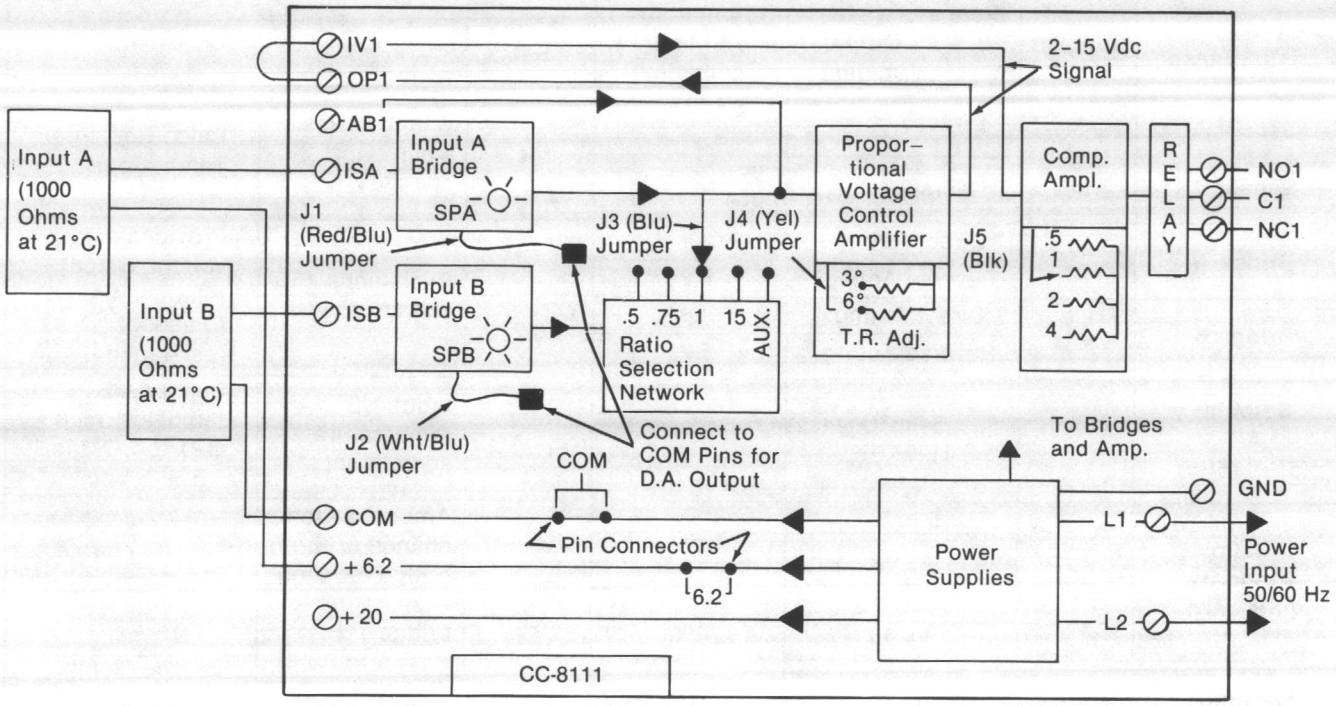

Figure 7. Controller and System Block Diagram

Ohms resistance) and their respective setpoints set for 21°C (70°F). The relay dropout voltage is factory set for 6.0 Vdc with a 1 volt differential selected. A throttling range of 3°F and a ratio of 1:1 have been selected. The input bridges are connected for (A) direct and (B) reverse acting outputs. If field calibration becomes necessary or a calibration check is desired, proceed as follows:

CAUTION: Line voltage is present on terminals L_1 and L_2.

1. Disconnect sensor to input A terminals. Replace input A sensor with a 1000 Ohm ±.1% resistor (SYZE-12987 test kit). Input A sensor will be connected to the CC-8111 as follows:
   A. Between ISA and +6.2 terminals for direct acting controller output.
   B. Between ISA and COM terminals for reverse acting controller output.
2. Disconnect sensor to input B terminals. Replace input B sensor with a 1000 Ohm ±.1% resistor (SYZE-12987 test kit). Input B sensor will be connected to the CC-8111 as follows:
   A. Between ISB and +6.2 terminals for direct acting controller output.
   B. Between ISB and COM terminals for reverse acting controller output.
3. Remove cover from CC-8111. Disconnect and tape the J3 jumper (blue) on the CC-8111.
4. Disconnect all input leads for the AB1 terminal on the CC-8111.
5. Connect a 20,000 Ohm per volt VOM between OP1 (+) and COM (–) terminals. Use a 15 to 20 Vdc scale range.
6. Rotate setpoint A (SPA) to the black dot by 68°F. The VOM should read 7.5 ±.5 Vdc. If not, rotate the SPA shaft until 7.5 ±.5 Vdc reading is obtained. Hold the shaft of the SPA firmly and then rotate the pointer in a CCW direction until the pointer is on the black dot by 68°F on the dial scale.
7. Connect the J3 jumper (blue) to the 1:1 ratio pin.
8. Repeat Step 6 above but now use setpoint B (SPB) adjustment.
9. Change SPA until VOM reads 6.0 ±.3 Vdc. The relay should have dropped out. If not, rotate stage 1 pot until relay dropout occurs.
10. The CC-8111 is now calibrated.
11. Replace all sensors and the cover to the CC-8111 and remove the meter.

CHECKOUT

1. Check nameplate for correct supply voltage and measure with a VOM between L_1 and L_2 terminals on the controller. If the supply voltage is not present, check the power source for problems.
2. Check the 20 (–1.5, +1) Vdc supply by measuring with a VOM between the +20 (+) and COM (–) terminals. If the 20 Vdc is not present or is out of tolerance, then:
   A. Check to see if the 20 Vdc supply is overloaded (35 ma. or greater).
   B. External device shorting the 20 Vdc supply.
   C. If neither A nor B above, consider the controller as defective and replace.

3. Check the +6.2 ±.5 Vdc supply by measuring with a VOM between the +6.2 (+) and COM (−) terminals. If the +6.2 Vdc is not present or is out of tolerance, then:

   A. Check to see if the 6.2 Vdc supply is overloaded (7 ma. or greater).

   B. External devices shorting the 6.2 Vdc supply.

   C. If neither A nor B above, consider the controller as defective and replace.

4. To check output operation, proceed as follows:

   For input A: Pull jumper J3 and tape.

   A. If the CC-8111 has been connected for direct acting output operation, short the +6.2 and ISA terminals together. The voltage as measured with a VOM between OP1 (+) and COM (−) terminals should be 2.5 Vdc or less.

   B. If the CC-8111 has been connected for reverse acting output operation, short the ISA and COM terminals together. The voltage as measured with a VOM between OP1 (+) and COM (−) terminals should be 15 Vdc or greater.

   C. Disconnect short across ISA and +6.2 or COM.

   For input B: Pull jumper J1 and tape. Remove sensor A.

   A. Repeat A, B and C above, except substitute ISB in the place of ISA.

5. Reconnect jumpers and sensors and the system is ready for operation.

APPLICATIONS

The units are shipped with input (A) direct and (B) reverse acting connections, throttling range (TR) at 3°F, ratio 1:1 and relay differential set to 1 volt. Other bridge connections will require recalibration.

Single Input

The controller may be used for a single input on either input A or B. The bridge action, sensor connections and internal connections are shown below.

Input	Bridge and Input Action	Internal Connections	Sensor Connection
A	Direct Acting	J1 to COM, J2 disconnect and tape	ISA and +6.2
	Reverse Acting	J1 to +6.2, J2 disconnect and tape	ISA and COM
B	Direct Acting	J1 disconnect and tape, J2 to COM, J3 on 1:1 ratio pin	ISB and +6.2
	Reverse Acting	J1 disconnect and tape, J2 to +6.2, J3 on 1:1 ratio pin	ISB and COM

Figure 8.

Dual Input

The controller can be used as a control with reset action by using both A and B inputs. Determine the mode of operation of input A control, select the ratio of authority of input B and determine the reset control action. Set up the controller per the chart below.

Input A Action	Sensor A Between	J1 to Pin	Reset Action of Input B	J2 to Pin	Sensor B Between
Direct Acting	+6.2 and ISA	COM	Direct Reset	+6.2	ISB-COM
			Reverse Reset	COM	ISB-+6.2
Reverse Acting	ISA and COM	+6.2	Direct Reset	COM	ISB-+6.2
			Reverse Reset	+6.2	ISB-COM

Figure 9.

On dual input applications, J3 is connected to desired ratio pin. For additional ratios, connect jumper J3 to "AUX" pin and add additional resistors as shown below (See Figure 5 for location of pins and jumpers):

Ratio	Aux. Resistor Value (Connect between Aux. Pins)
2.5:1	29.4K, ±1%, metal film
5:1	57.6K, ±1%, metal film
10:1	115K, ±1%, metal film
20:1	221K, ±1%, metal film

Figure 10.

Differential Inputs

The controller can be used to respond to the difference between inputs A and B. Use sensor on ISA in the higher temperature media. Set differential to be maintained on SPA and SPB using SPA minus SPB as the selected differential number. Set ratio to 1:1.

Input	Sensor Connects	Jumper Connection	Relay Energizes
A	ISA-6.2	J1 to COM	Inc. Temp. A
B	ISB-COM	J2 to 6.2	Dec. Temp. B

Figure 11.

The CC-8111 differential range can be extended by setting SPA to the black dot by 68°F and placing the resistor selected from the table below between 6.2 and AB1 terminals. This will fix SPA to the indicated degrees in the table. The differential will be this fixed value minus the setting of SPB.

Setpoint A Degrees F	Resistor ±5% 1/4 Watt
150	130K
200	82K
250	56K
300	43K
350	36K
400	30K
450	27K

Typical Control System Wiring

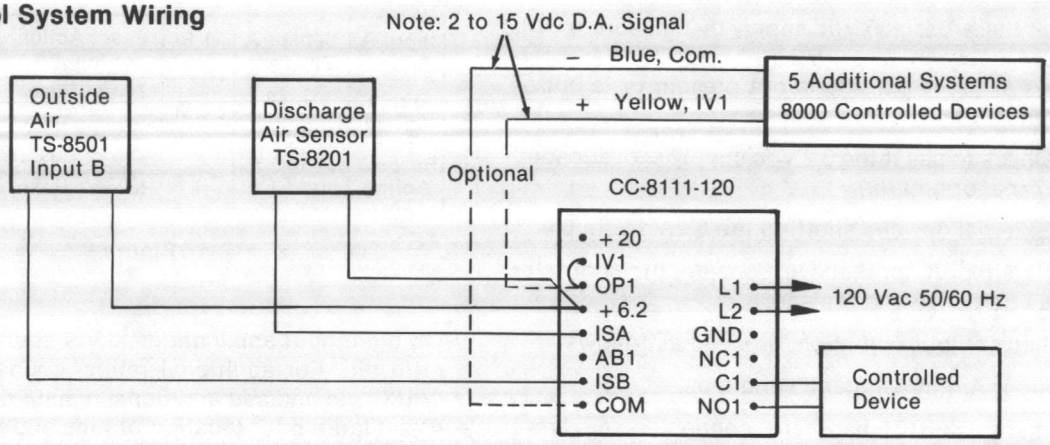

Figure 12. Discharge Temperature Control with Outdoor Air Reset

Note: Connect J2 jumper to COM and refer to dual input setup procedure.

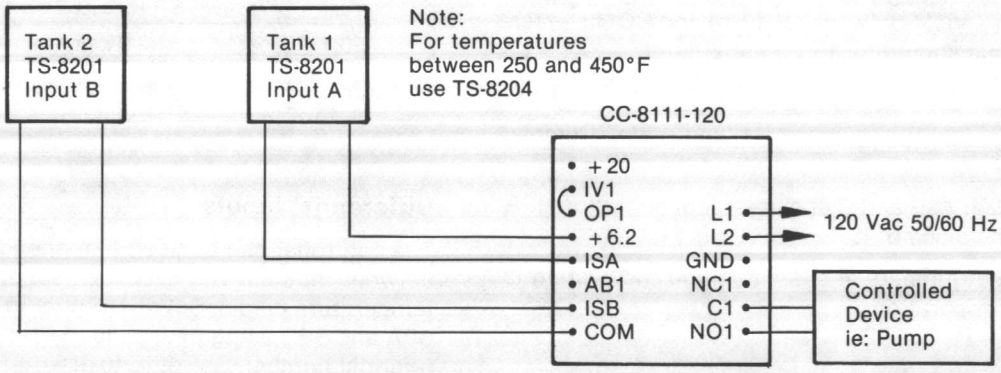

Figure 13. Tank Differential Temperature Control

INPUT WIRING DIAGRAMS

1. Temperature Sensor(s) Input (Standard).

Direct acting = DA, Reverse acting = RA.

Room Sensor With Setpoint

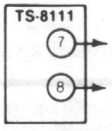

	Input A (J1)		Input B (J2)	
Terminal	DA	RA	DA	RA
7	6.2	COM	6.2	COM
8	ISA	ISA	ISB	ISB
Setpoint A adjusted for 21°C or 70°F			Setpoint B adjusted for 21°C or 70°F	

Sensors Without Setpoint

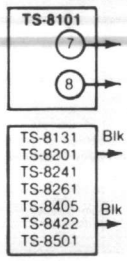

	Input A (J1)		Input B (J2)	
Terminal	DA	RA	DA	RA
7	6.2	COM	6.2	COM
Blk				
8	ISA	ISA	ISB	ISB
Blk				

2. Remote Setpoints.

Used with direct acting or reverse acting sensor inputs.

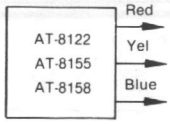

	Input A		Input B	
Wire	DA	RA	DA	RA
Red	6.2	COM	6.2	COM
Yel	AB1	AB1	AB1	AB1
Blue	COM	6.2	COM	6.2

Note: Adjust SPA and SPB adjustments in CC-8111 for 21°C or 70°F. Ratio select set for 1:1.

3. Night depression and/or morning warm-up.

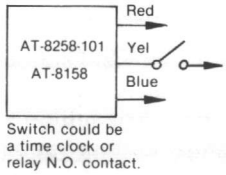

Wire	Direct Acting	Reverse Acting
Red	6.2	COM
Yel	AB1	AB1
Blue	COM	6.2

4. Temperature indication and control.

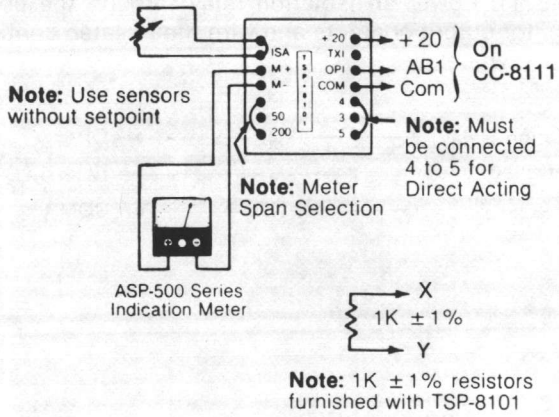

Input A			Input B	
Wire	**DA**	**RA**	**DA**	**RA**
X	6.2	ISA	6.2	ISB
Y	ISA	COM	ISB	COM
	J1 to COM	J1 to 6.2	J2 to COM	J2 to 6.2

Note: For temperature indication and control on input B, OP1 of the TSP is connected by a resistor, selected from the table below, to AB1 of the CC-8111. Connect CC-8111 jumper J3 as shown in the table for the ratio selected.

Table

Ratio	R Value	Jumper J3 Connects To
1:1	None	1:1 ratio pin.
5:1	45.3K, ±1%, M/F	Aux. ratio pin. 57.6K, ±1% between aux. pins.
10:1	102K, ±1%, M/F	Aux. ratio pin. 115K, ±1% between aux. pins.
15:1	158K, ±1%, M/F	15:1 ratio pin.
20:1	215K, ±1%, M/F	Aux. ratio pin. 221K, ±1% between aux. pins.

5. 135 Ohm slidewire—Input A only.

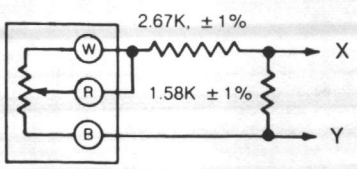

Input A		
Wire	**DA**	**RA**
X	6.2	COM
Y	ISA	ISA

Note: Adjust SPA in CC-8111 for 21°C (70°F). Disconnect J3 jumper and tape end. Do not use TR greater than 3°F on CC-8111.

6. Solar compensation using TS-8531 sensor and CN-8101 auxiliary bridge.

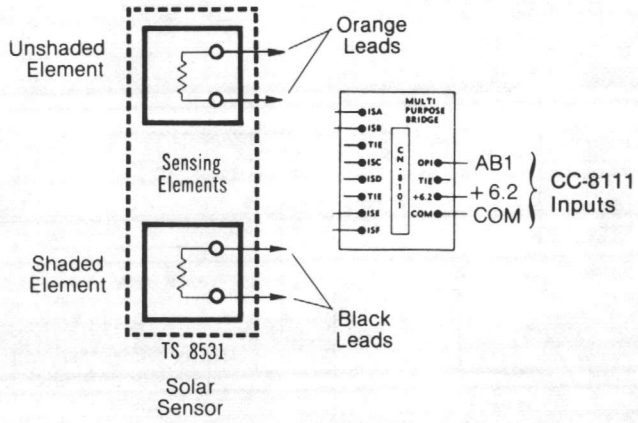

TS-8531 Sensor Leads	Direct Acting	Reverse Acting
Orange	ISA	ISE
Orange	ISB	ISF
Black	ISE	ISA
Black	ISF	ISB

Note: No calibration of CN-8101 required.

CN-8101 Ratio Setting	Degrees Reset (No Sun to Full Sun)
.5:1	70°F
1:1	35
5:1	7
10:1	3.5
20:1	1.75

CC-8111 Input A Action	Solar Compensation Connected for:	Reset Action Increased Sun Load Resets Setpoint A:
Direct Acting	Direct Acting	Down
	Reverse Acting	Up
Reverse Acting	Direct Acting	Up
	Reverse Acting	Down

7. AD-8501 Automatic Reset Adaptor.

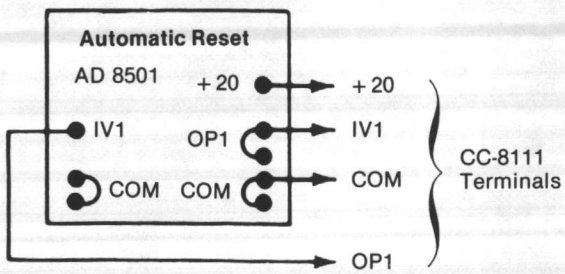

Notes:

1. Remove jumper between OP1 and IV1 on CC-8111.
2. Can be used with either D.A. or R.A.

8. Humidity control only—reverse acting CC-8111 output only.

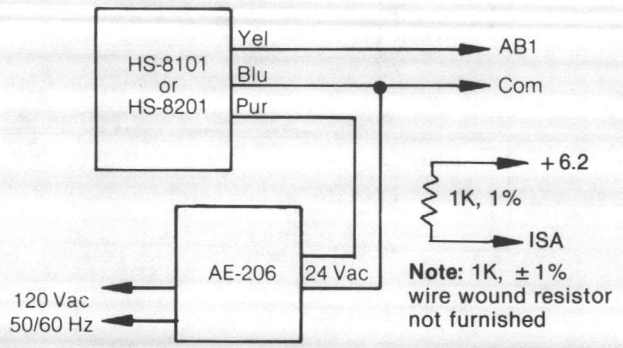

Notes:

1. SPA adjustment becomes system calibration adjustment only.
2. Disconnect J2 jumper (wht/blu) and tape end.

9. Humidity indication and control—reverse acting CC-8111 output only.

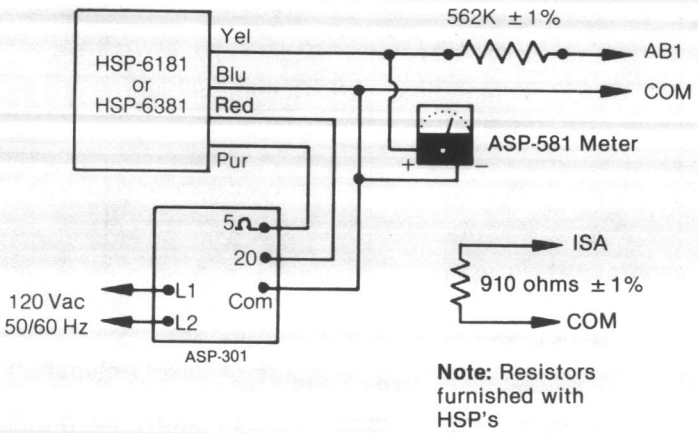

Notes:

1. J1 jumper (red/blu) must be connected to pin marked +6.2.
2. Disconnect J2 jumper (wht/blu) and tape end.
3. SPA adjustment can be used for setting humidity control point.

10. Power Monitor Control Override.

Note: Remove jumper between OP1 and IV1 terminals of CC-8111. Power an isolation relay through the power monitor output contacts and wire the isolated contacts as shown below.

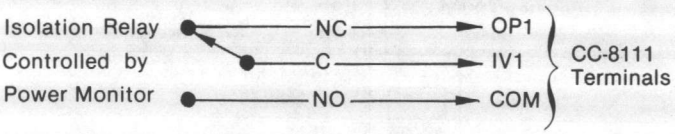

Barber-Colman Company
ENVIRONMENTAL CONTROLS DIVISION

1354 Clifford Avenue
P.O. Box 2940
Loves Park, IL U.S.A. 61132-2940

TS , TT-12 , TS-2
TS-3 , TS-4 , TS-5

General Instructions

Solid State Sensing
Temperature and Humidity
Series TS-8000 and HS-8000

Temperature Sensing

GENERAL INFORMATION

Sensing is accomplished by the use of a temperature sensitive Balco resistance wire packaged in the form of room, duct, averaging and outdoor type configurations. The design of the entire system is around a 1000 Ω sensing element at 70°F.

WIRING

Make all electrical connections to the element in accordance with the installation and wiring diagram for the job. Comply with national and local electrical codes. Do not use the element box as a junction box for other control circuits. It is generally advisable to use flexible conduit for connecting box to rigid conduit. Restrict element leads to shortest length practical. Barber-Colman twisted cable or factory approved cable should be used.

Room —
TS-8100 Series

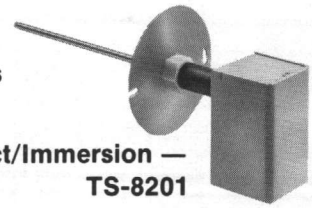

Duct/Immersion —
TS-8201

Outdoor —
TS-8501

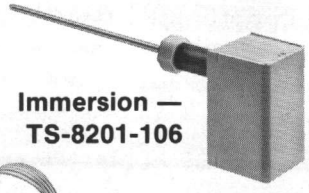

Immersion —
TS-8201-106

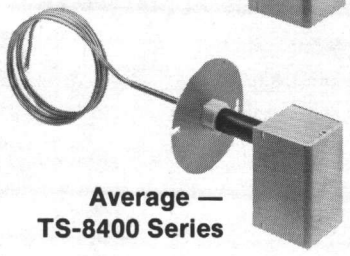

Average —
TS-8400 Series

S.L.

Part No.	Use	Location	Mounting	Terminal Code Wiring
TS-8101	Room Sensor w/o Setpoint	Wall	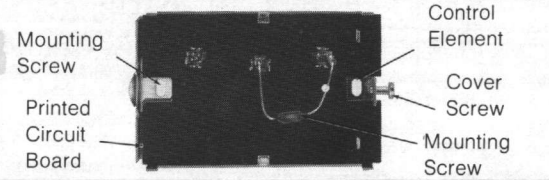	⑦ } Output ⑧ } Terminals
TS-8111	Room Sensor w/Setpoint	Wall		
TS-8201	Duct Immersion 7″ Immersion Length	Duct or Well AT-215 3/4″ NPT	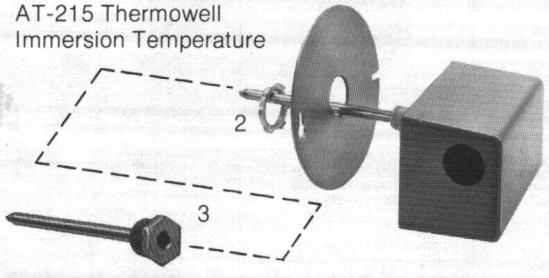	Pigtails: Black } (C) Controlling Black } Black } (L)* Controlling Black } *Found only on the TS-8331
TS-8201 -106	Immersion 4″ Insertion Length	Well AT-225 1/2″ NPT		
TS-8331	Lagged Sensor	Duct		
TS-8405	5′ Average	Duct	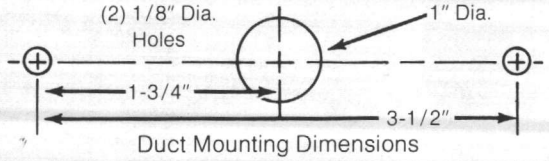 Duct Mounting Dimensions	
TS-8422	22′ Average	Duct		
TS-8241	Diffuser	Ceiling	Mount on Face of Ceiling Diffuser. See Instructions for B-C Models PB, PS or SFS, SFB. Pg. 2	Pigtails: Black Black
TS-8261	Light Fixture	Light Fixture	Mount in Return Grill of Light Fixture	Pigtails: Black Black
TS-8501	Outdoor Air	Outside of Building	Use Conduit Connectors	Pigtails: Black } Controlling Black }
TS-8531	Solar	Outside of Building		Orange } Element Orange } (Solar)
TS-8533	Econostat	Outside of Building		Red } Heater Red } (Econostat)

Solid State Humidity Sensing

Sensing is accomplished by the use of a nonorganic resistance type material which will be housed either in a room or duct type mounting base. Selection of the proper AH-100 series element will provide the capability of control over a 15% range. Elements are available through the span of 5% to 95% R.H.

The average resistance of each element at midrange is approximately 22,000 ohms; except the violet element, which is 50,000 ohms. A resistor of appropriate value may be substituted in the bridge circuit to verify the element resistance.

CAUTION

Do not measure resistance of element with an ohmmeter, as DC voltage across the element will cause polarization and a new element will be required. Basic element is not repairable. Order a replacement from the factory or local branch office.

CARE OF ELEMENT

The elements are wrapped with a moisture pervious cellophane, which actually is an air filter. On installations using duct elements, where air velocities are reasonably high **do not remove cellophane.** Always install element with wrapping so that perforations in cellophane are on downstream side of air currents. Punch more holes (only in downstream side of cellophane) to increase element sensitivity.

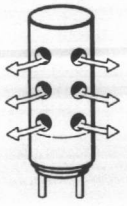

TABLE 1.

Part Number	Sensing Element Color	Relative Humidity Range
AH-100	Violet	85% to 95%
AH-101	Blue	70% to 85%
AH-102	Green	50% to 70%
AH-103	Yellow	40% to 55%
AH-104	Orange	30% to 45%
AH-105	Brown	10% to 30%

WIRING

Make all electrical connections to the device in accordance with the installation wiring diagram for the job. Comply with national and local electrical codes. Restrict element leads to shortest length practical, using three conductor twisted cable, 18 gauge minimum.

CAUTION

Power wiring must never be installed in the same conduit.

LOCATION

Locate the sensing element where it will be exposed to unrestricted natural air circulation and to the average conditions of the controlled space. Do not locate it near extreme sources of heat, cold, or moisture.

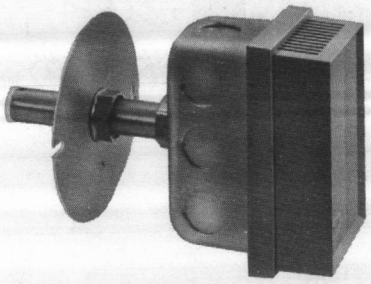

Duct — HS-8200 Series

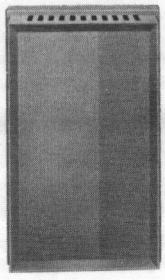

Room — HS-8100 Series

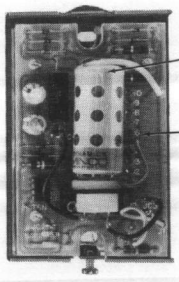

CALIBRATION

1. Place DC-VOM on output of CP-8102 controller, OP1 (+) and COM (-).
2. Read humidity at the sensor.
3. Place jumper on proper pin, per chart below.
4. Adjust the controller (CAL A) to 7.5 Vdc output.
5. Refer to CP-8102 literature if further details are required.

GENERAL INFORMATION

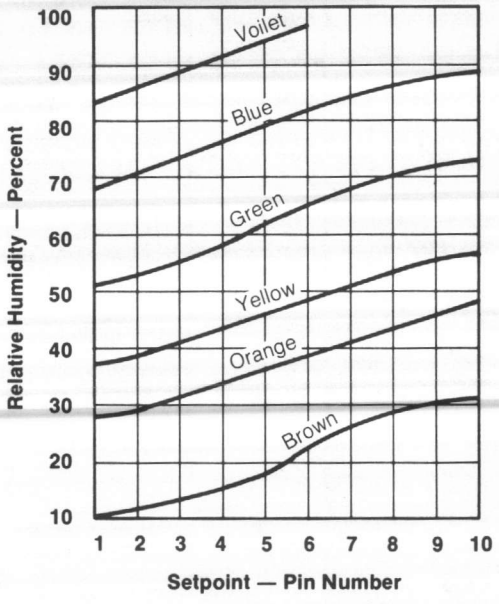

MOUNTING OF DIFFUSER SENSOR TS-8241

Sensor should be mounted to the face of the ceiling diffuser so that it projects downward into the room. See Figure 1. If the diffuser has an adjustable pattern, the discharge air direction must be adjusted to a horizontal pattern. This will insure a representative sample of room air over the element (Figure 2). The transmitter will not perform satisfactorily if the discharge is adjusted to a vertical pattern.

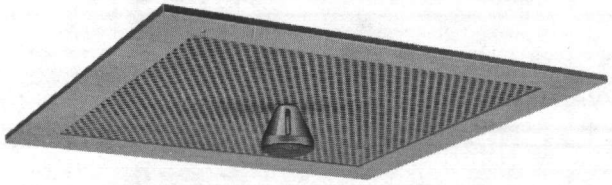

Figure 1.
Sensor Mounted in Perforated Face Ceiling Diffuser Model PB or PS

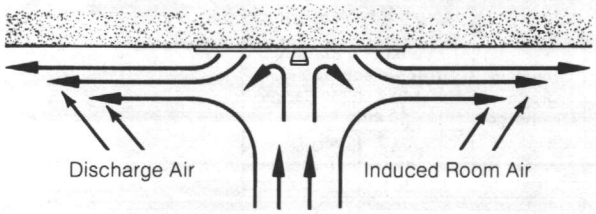

Figure 2.
Room Air Induced over Sensor by Discharged Air

A 7/16-inch hole is required in the diffuser face for mounting.

The SFS and SFB louver faced diffusers are available in nine air patterns, both in the square and rectangular design. For proper installation, use Table 2 which shows sensor location and the mounting figure referred to in the installation procedure. APNS-107 must be ordered separately.

SENSOR MOUNTING PROCEDURE ON SFS AND SFB USING APNS-107 KIT

1. Drill a 5/16″ hole for sensor leads.
   a. Fig. 3. Locate hole center on an angled surface about 5/16″ from an edge of the 1/2″ square so as to avoid drill contact with the welded center plate mounting brackets.
   b. Fig. 4. Locate the hole center on one louver about 5/16″ from junction of two center back to back louvers.
   c. Fig. 5. Locate hole center on an end louver about 1/2″ from the junction of the louver and the mounting flange.
2. Bring field leads through the 5/16″ hole. If required, remove the louver assembly from the mounting flange.
3. Center the APNS-107 bracket over the 5/16″ hole (use as a template) and drill 1/8″ holes for the mounting screws.
   a. Fig. 3. Drill two holes near edges of square center plate.
   b. Fig. 4. Drill two holes, one each on bottom edge of back to back louvers.
   c. Fig. 5. Drill one hole on end louver.
4. Assemble the sensor to APNS-107 bracket as shown in Figs. 3, 4, and 5.

   Fig. 5. Cut off one side of APNS-107 as shown.
5. Make field connections to sensor leads and push leads up through the 5/16″ hole.

   Wrap friction or electrical tape around the leads and fill the 5/16″ hole, preventing direct primary air passage over the sensor.
6. Attach APNS-107 as shown in Figs. 3, 4, and 5 using #6 screws.

   Fig. 5. Cover the crack between the end louver and mounting flange at least 12″ on each side of the sensor. A 24″ length of 3/4″ tape stuck to mounting flange can be used.
7. The sensor installation is complete.

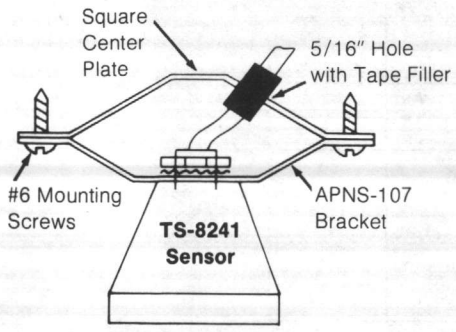

Figure 3

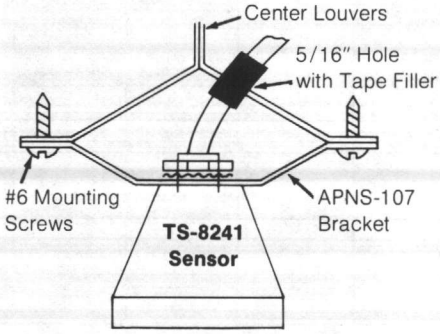

Figure 4

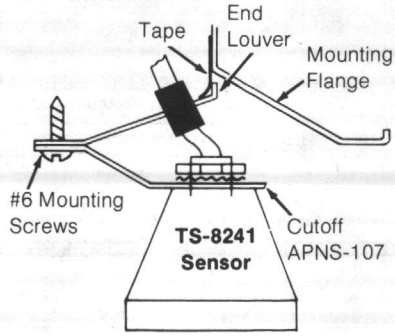

Figure 5

TABLE 2. SENSOR LOCATION AND FIGURE SHOWING MOUNTING DETAILS

Air Pattern	SENSOR LOCATION			
	Center of Diffuser	Center of Side with No Air Throw	Corner Opposite Air Throw	End Opposite Air Throw
	Sq. Rect.	Sq. Rect.	Sq. Rect.	Sq. Rect.
0	Fig. 3 Fig. 4			
2		Fig. 4		
3	Fig. 4			
4				
5				
6			Fig. 3 Fig. 5	
7				
8				Fig. 5
9				

TS-8241 must not be located nearer than 18″ from a wall or corner of a room when used on air patterns 2, 6, 7, 8, or 9. This allows space for induced air to pass over TS-8241.

AIR PATTERNS (As Viewed from Diffuser Face)

Number is air pattern designation when ordering.

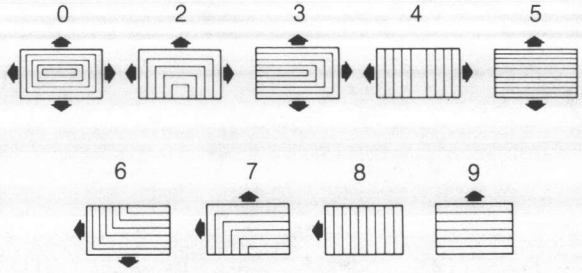

Specifications			Temperature Sensors				Humidity Sensors	
			Room Light Fixture Diffuser*	Duct/ Immersion	Averaging	Selective Ratio Discharge	Sensors must be ordered separately. Refer to Sensor Range Table 1.	
							Room	Duct
Package		Size**	4⅜×2¾×1⅝	4¾×3½×9⅛	4¾ × 3½ × †	4¾×3½×9⅛	4⅜×2¾×1⅝	4⅜×3½×9⅛
		Mounting	Wall	Duct/ Immersion	Duct	Duct	Wall	Duct
		Mounting Position	Vertical	Vertical	Vertical	Vertical	Vertical	Vertical
		Connection	Terminals	Pigtails	Pigtails	Terminals	Pigtails	Pigtails
		Ambient Temp. Limits	-40 to 250°	-40 to 250°	-40 to 250°	-40 to 250°	35 to 135°	35 to 135°
Sensor		Resistance	1000 Ω	1000 Ω	1000 Ω	1000 Ω		
		Sensitivity	2.2 Ω/°F	2.2 Ω/°F	2.2 Ω/°F	2.2 Ω/°F		
		Length		6″	5′ or 22′	6″		6″
Input		Control Range						
		Impedance						
	Adjust	Setpoint Range	55 to 85°				Up to 20% R.H.	Up to 20% R.H.
		Calibration Range					±5%	±5%
		Throttling Range						
		Ratio				5 to 20/1		
Output	Voltage	Impedance						
		Range						
		Reference				Negative	Negative	Negative
	Power Supply	Voltage						
		Current						
		Regulation						
Load		Voltage						
		Current						
Power		Voltage				6.2 Vdc ±.4	24Vac±10%	24Vac±10%
		Current				1 mA	25 mA	25 mA

Barber-Colman Company
ENVIRONMENTAL CONTROLS DIVISION

1354 Clifford Avenue
P.O. Box 2940
Loves Park, IL U.S.A. 61132-2940

SQ-2

General Instructions

Solid State Controlled Device
Single Stage Relay CC 8101
Two Stage Relay CC 8102
Time Proportioning Relay CC 8103

General Information: Staging relays, Figure 1, are offered in various configurations which include single stage, dual stage, and dual stage with one stage containing heat anticipation. These staging relays require 120 volts AC for power source and contain a 20 volt DC regulated power supply which is used to supply power to other modules, such as controllers and adaptors. The staging relay receives a 1-15 volt DC input signal and by means of adjusting the drop-out voltage of each stage, the relays may be made to operate at any voltage in this 1-15 volt span. The differential of the relay is adjustable by selecting the proper pin on the printed circuit board.

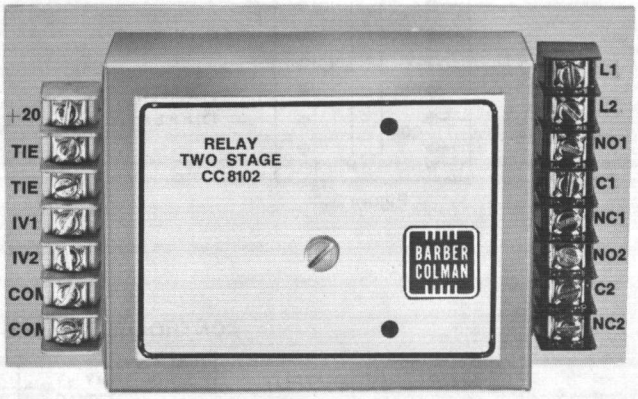

TWO STAGE SHOWN

Figure 1

The time proportioning version of the staging relays can be used to control heating-cooling applications. The heating side is built with a heat anticipation circuit which provides time proportioned control of electric heat. The second relay in the module can be used for cooling which would be connected to a single stage DX coil.

Adjustments: The staging relay has a potentiometer which will set the drop-out point of each relay between 2 - 12 volts DC. It also contains fixed deadband (pull-in to drop-out) of 1/2, 1, 2, and 4 volts DC, Figure 2. Pull-in point represents drop-out voltage plus deadband voltage setting.

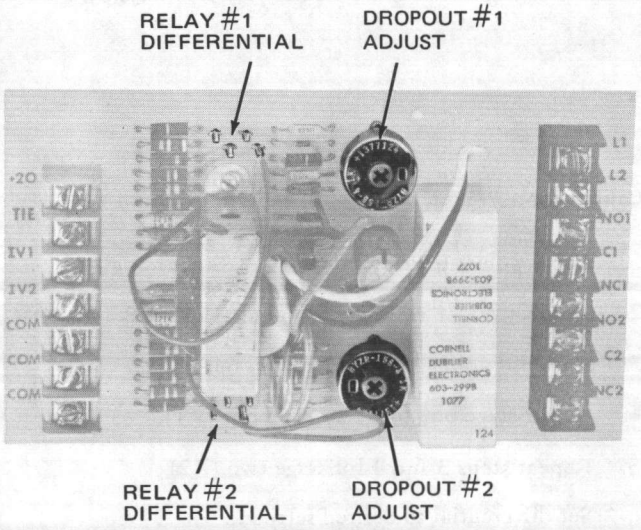

Figure 2

Ambient Temperature Limits:
Minimum +40°F; Maximum +135°F.

Installation Information: The module is designed to be track mounted and located in a local control panel. The unit is provided with a 7-1/2" piece of mounting track to permit quick and easy panel mounting, in a horizontal or vertical position. Location should be such that the unit is not subjected to severe vibration, shock, or ambient temperature conditions.

Make all connections in accordance with job wiring diagrams, complying with all national electrical codes. Wiring terminations are made on screw terminals located on the end of the printed circuit board. See Figure 3, 4, 5 for module wiring.

Construction: The CC 8101, 8102, and 8103 relays are designed primarily for track mounting in a local or central control panel. However, they can also be located inside the AD 8910 enclosure for remote field mounted installations.

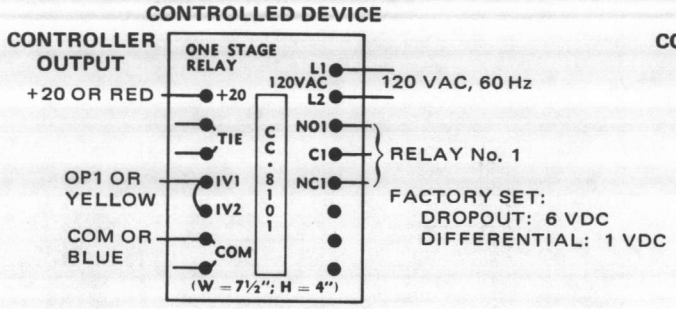

Figure 3

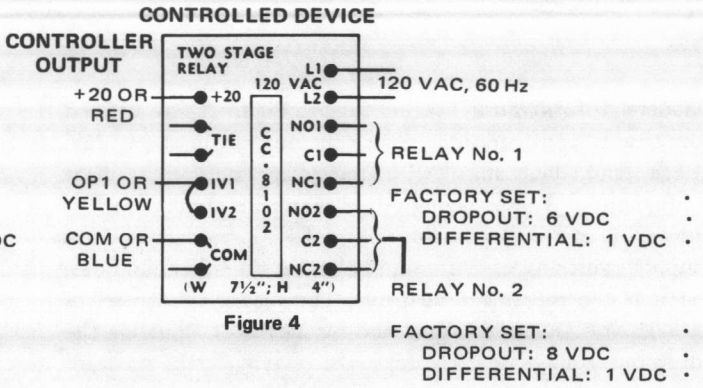

Figure 4

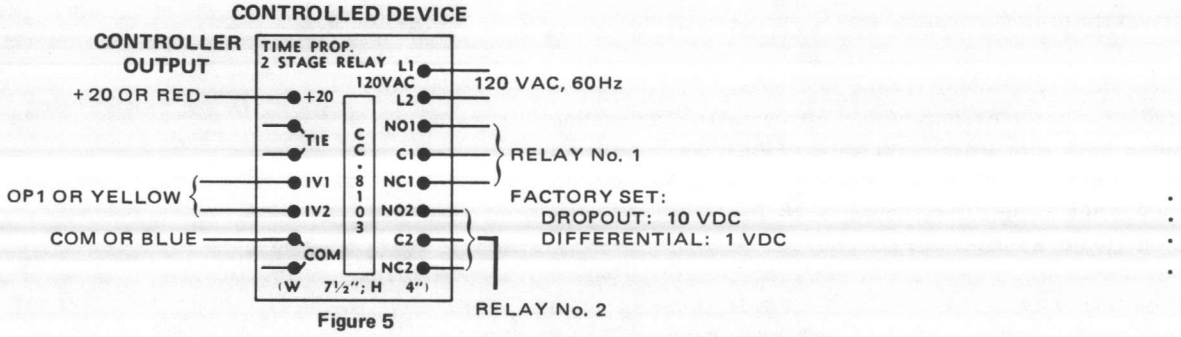

Figure 5

Calibration:

1. Apply power to relay module.
2. Connect VOM to input terminals IV1, IV2 and COM.
3. Set input voltage to desired drop-out voltage (IV1).
4. Adjust stage one for relay drop-out (R1).
5. Repeat steps 3 and 4 for stage two (R2).
6. Set differential to desired setting.

Service:

1. Check wiring per job wiring diagram.
2. Measure with VOM
   A. Power 120 VAC terminal L1 and L2.
   B. Power supply 20 VDC terminal +20 and COM.
   C. Input 1-15 VDC terminal IV1, IV2 and COM.
3. Consult EN 111 for additional service information.

Barber-Colman Company
ENVIRONMENTAL CONTROLS DIVISION
1354 Clifford Avenue
P.O. Box 2940
Loves Park, IL U.S.A. 61132-2940

LITHO IN U.S.A.

SQ-1

General Instructions

Signal Adaptor for Dual Output Sequenced Control AD-8122, AD-8123, AD-8124

GENERAL INFORMATION

The Signal Adaptors for Dual Output Sequenced Control are used as add-ons to the output of standard System 8000 Solid State Controllers. The input voltage, as applied to the signal adaptor from the controller, is distributed to each of the two control output ramps. A controller output change of 1.5 volts will produce a 3 volt change in each of the outputs of the signal adaptor.

The two outputs make it possible to establish a temperature span between heating and cooling control from one controller setpoint. Proportional or two-position control is available from the adaptors depending on what System 8000 controlled device you are controlling with the 6–9 volt dc output.

FEATURES

Three models, AD-8122, two direct acting outputs (DA-DA); AD-8123, one direct and one reverse acting output (DA-RA); and AD-8124, one reverse and one direct acting output (RA-DA), are available. The AD-8122 (only) outputs have different operating sequences depending on whether the controller output is direct-acting or reverse-acting. AD-8123 and AD-8124 are for DA input only. See the Adaptor Control Outputs section.

The compact design permits mounting on the back of the TP-8101 thermostat, on a track mounting in a panel or separately. Wiring and system span setting is shown on the face of the adaptors. Color coding is compatible with Series 8000 devices. The two slope control output with adjustable span conforms with ASHRAE 90-75 Standards.

PERFORMANCE

Ambient operating temperature
18° to 60°C (0° to 140°F).

Ambient storage temperature
–40° to 71°C (–40° to 160°F).

Power supply input –12 MA @ 20 Vdc maximum ±2.

Input signal 2 to 15 Vdc as produced by System 8000 controllers or any 2 to 15 Vdc source.

Adaptor output signal Two outputs each producing a control signal of 5.5 to 9.5 Vdc as the controller signal changes from 6 to 9 Vdc.

Total system throttling range Determined by T.R. setting on controller times the span setting of the signal adaptor.

Deadband between adaptor outputs Equal to the total throttling range (T.R.) minus the T.R. of the controller.

Mounting dimensions 95 mm (3¾") high × 38 mm (1½") wide × 16 mm (⅝") deep.

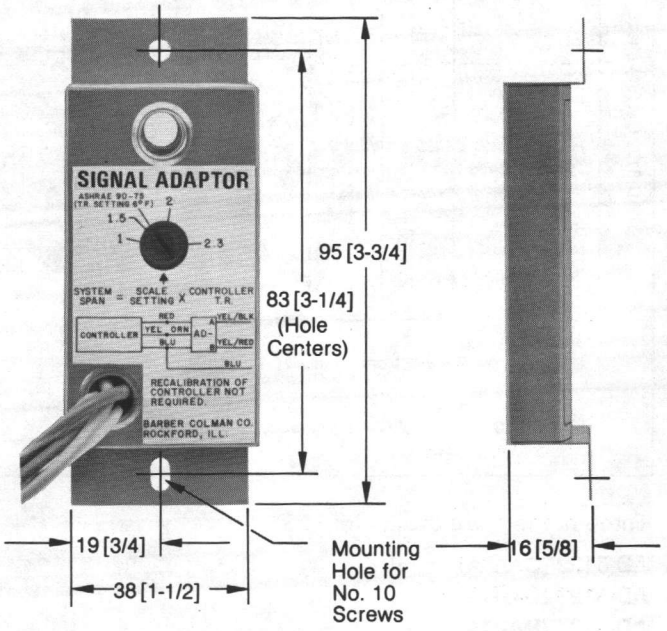

Dimensions in Millimeters with Inches followed in brackets

Figure 1

CONSTRUCTION AND USE

The adaptor with 228 mm (9 inch) pigtail leads is housed in a stainless steel mounting bracket suitable for attachment to the back of a TP-8101, screw or tape mounting to a panel, or snapping into a standard System 8000 plastic track.

The adaptors can be used with any System 8000 device which has a proportional 2–15 volt dc output. Some of the controllers that can be used with the AD-81XX Series are CP-8102, CC-8104 and TP-8101.

OPERATION

The two adaptor outputs operate in sequence. When the controller is at setpoint with a controller output of 7.5 volts, one output may be completely through its control range (depends on span setting) and the other not yet entering its control range. The second output will begin control as soon as the input voltage has covered the established span or deadband. The deadband or span between the output ramps is controlled by the controller T.R. setting and the adaptor span pot setting. It will not allow control action to begin until a programmed temperature differential has been met. Control span may be adjusted from 1 to 2.3 times controller T.R.; separation will be reasonably symmetrical about the center value. The total system throttling range between the full heating and full cooling control point is found by multiplying the controller throttling range by the span pot scale setting on the signal adaptor, i.e., T.R. on a TP-8101 is set at 3.4°C (6°F) times 1.7 on signal adaptor setting for (ASHRAE 90-75) to = 5.5°C (10°F). System span would be 5.5°C (10°F) less controller T.R. of 3.4°C (6°F) which equals 2.2°C (4°F) span or deadband.

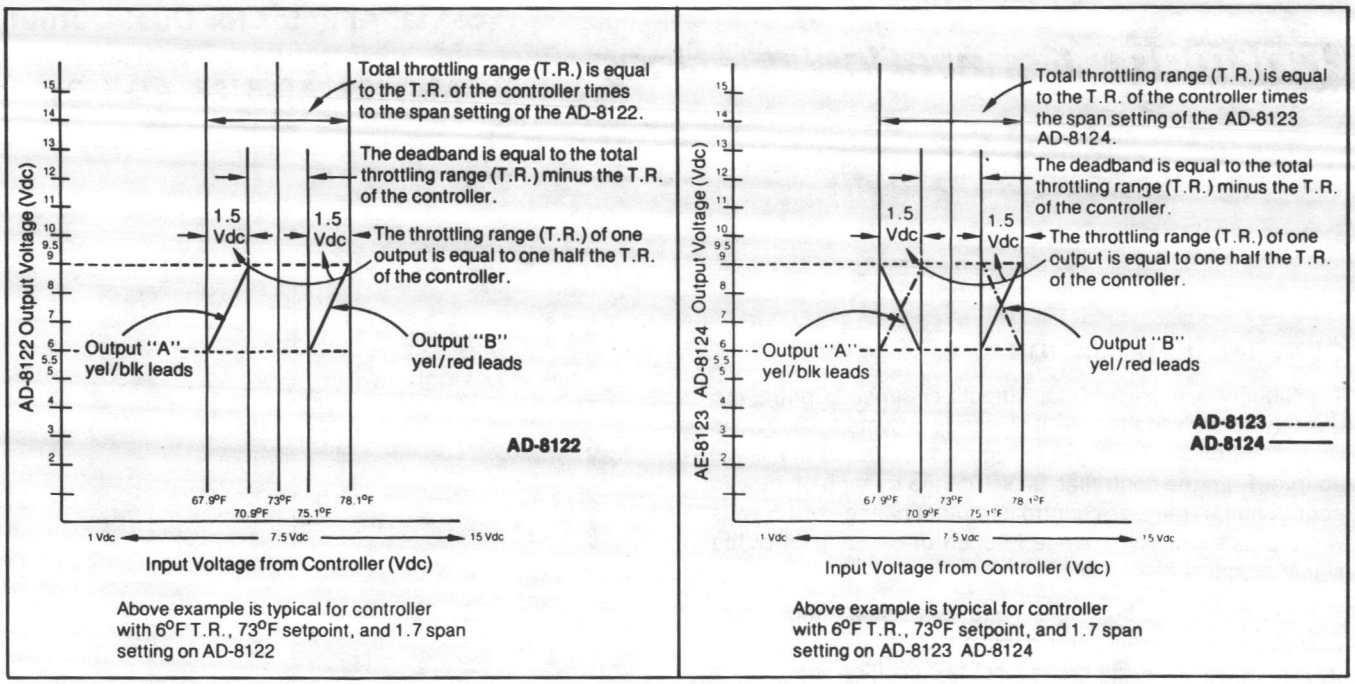

Three models are available:

AD-8122 (DA-DA)
AD-8123 (DA-RA)
AD-8124 (RA-DA)

NOTE:

1. A DA output is direct acting with respect to a Direct Acting input voltage.
2. A RA output is reverse acting with respect to a Direct Acting input voltage.

A wiring schematic is shown on the face of the signal adaptor.

Color coding is compatible with System 8000 devices.

Blue is common.

Red is +20 Vdc power supply.

Yellow is output (two separate wires): output A — yellow with a black stripe; output B — yellow with a red stripe.

Orange is input to the signal adaptor and is connected to the yellow wire of a TP-8101 or to the output (OP1) of a controller.

Typical Wiring Connections

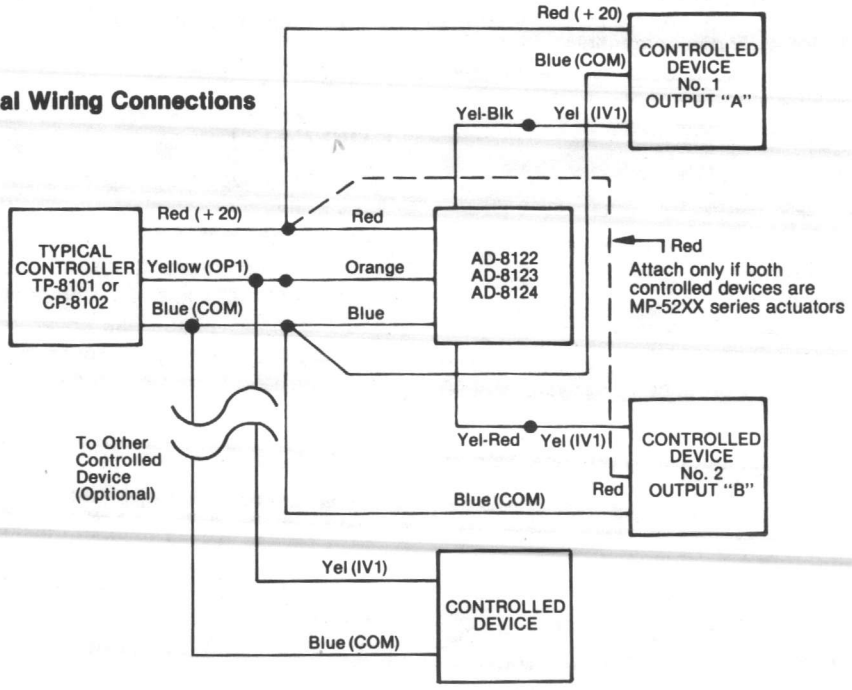

AD-8122, AD-8123, AD-8124 Field Wiring Diagram

ADAPTOR CONTROL OUTPUTS

The outputs action shown for all three signal adaptors is based on having a direct acting input from the controller. One adaptor AD-8122 (DA-DA) can be used with a reverse-acting controller input to obtain a reverse action output on both adaptor outputs. When using a reverse action input the "A" and "B" outputs of the adaptor will change authority positions, i.e., "A" output is first energized with direct action input and "B" output is first energized with reverse action input.

NOTE: AD-8123 and AD-8124 can be used only with direct acting controller input.

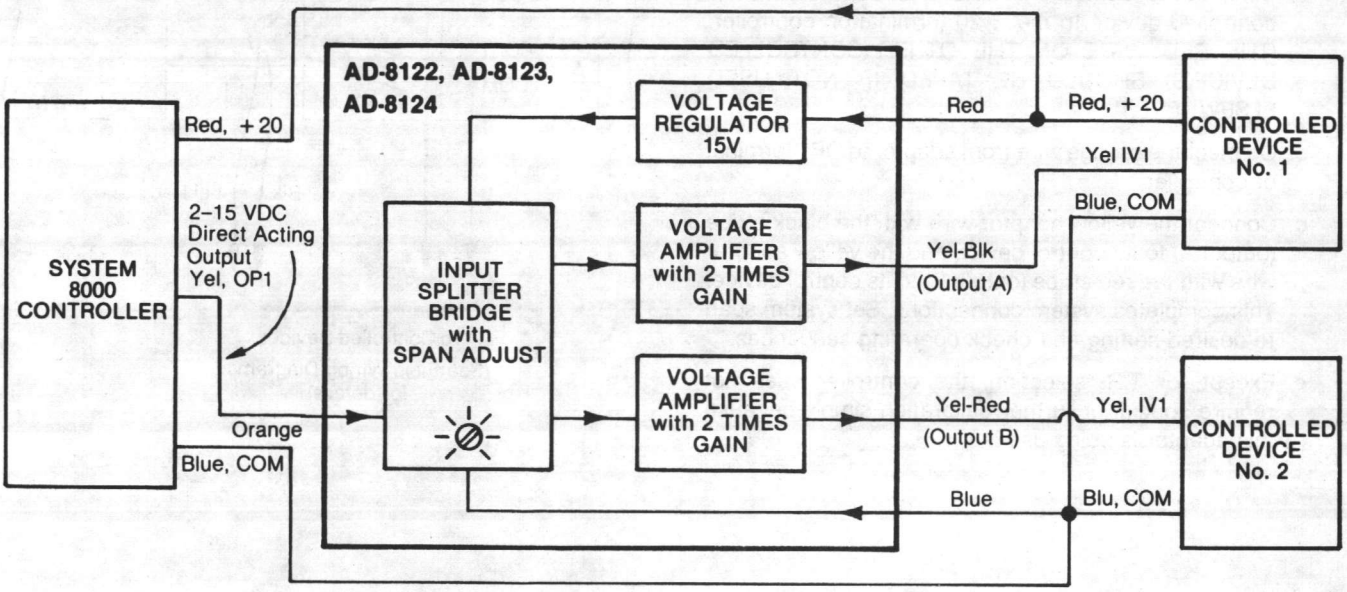

Basic System and Adaptor Block Diagram

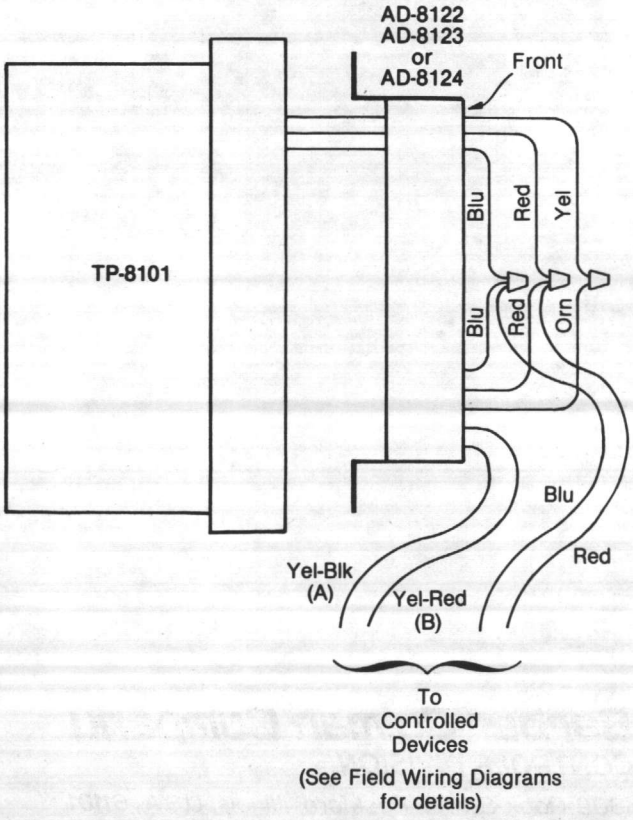

MOUNTING AND WIRING TO TP-8101

1. Mounting on TP-8101

Push the three wires of the TP-8101 through the round hole in the adaptor from the back to the front. (See picture.)

2. Wiring to TP-8101

a. Connect the blue wire from the TP-8101, the blue wire from the adaptor and the blue wires from the controlled devices together.

b. Connect the red wire from the TP-8101 to the red wire from the adaptor and the red wire from one of the controlled devices together. (THE RED WIRE ON THE OTHER CONTROLLED DEVICE(S) SHOULD BE TAPED IF NOT USED ELSEWHERE.) Connect all red wires if controlled device is Series MP-52XX.

c. Connect orange wire from adaptor to yellow wire from TP-8101.

d. Connect the yellow adaptor wire with the black stripe (output A) to its control device and the yellow adaptor wire with the red stripe (output B) to its control device. This completes system connections. Set system span to desired setting and check operating sequences.

e. Except for T.R. selection, the thermostat does not require special or further calibration simply because this adaptor is being used.

TRACK MOUNTING AND WIRING TO OTHER SERIES 8000 DEVICES

1. Connecting to Other 8000 Series Devices

Snap the signal adaptor into plastic track or mount with screw holes, #10 screws.

2. Wiring to Other Devices

a. Connect the blue adaptor wire and blue wires from controlled devices to controller common (COM).

b. Connect the red wire of adaptor and red wire from one controlled device to the +20 terminal on controller. (THE RED WIRE ON THE OTHER CONTROLLED DEVICE(S) SHOULD BE TAPED IF NOT USED ELSEWHERE.)

c. Connect the orange wire from adaptor to OP1 terminal of controller.

d. Connect the yellow adaptor wire with the black stripe (output A) to its control device and the yellow adaptor wire with the red stripe (output B) to its control device. This completes system connections. Set system span to desired setting and check operating sequences.

e. Except for T.R. selection, the controller does not require special or further calibration simply because this adaptor is being used.

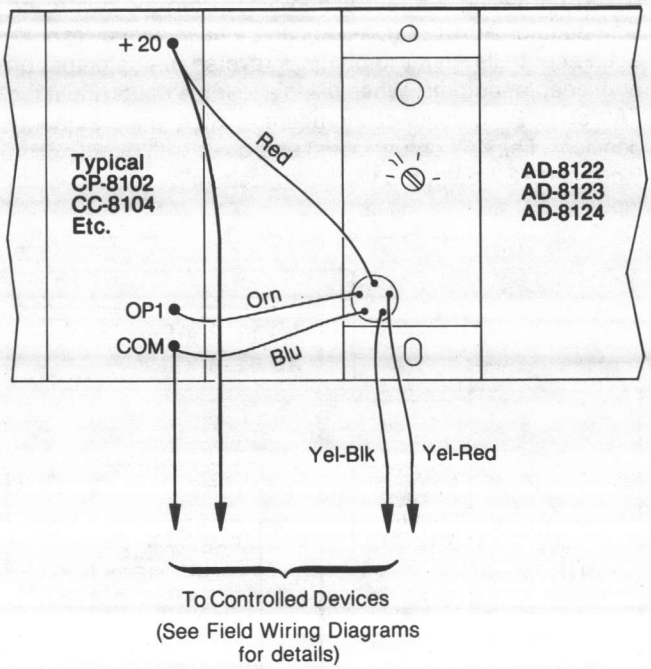

Barber-Colman Company
CONTROLS DIVISION
1300 Rock Street, Rockford, Illinois, U.S.A., 61101

F-16770 BK

LITHO IN U.S.A.

SA

ELECTRONIC

AT-8122
AT-8155
AT-8158
AT-8222-101
AT-8258-101
AT-8435
AT-8521
AT-8522
AT-8561
AT-8562
AT-8563

Remote Setpoint Adjuster

For use when setpoint is to be remote from the controller or to obtain setpoint range required for the application. On all electronic controllers except CP-8102 internal setpoint becomes system calibration (set at 70°F). When using remote setpoint adjuster on CP-8102: disable setpoint "A" by moving jumper J1 to JC2; disable setpoint "B" by moving jumper J2 to JC4. Units are designed for surface mounting. Can be mounted on AD-8954 for panel mounting. AD-8954 can snap into AD-8953 mounting track. **Power requirements:** +6.2 Vdc 1.2 mA. **Wiring connections:** Color coded pigtail leads. **Ambient limits:** 40 to 135°F. **Dimensions:** Plate 1-7/8" wide × 2-1/16" high; allow 1-1/2" depth behind plate for mounting. Requires a 3/8" dia. mounting hole.

ACCESSORIES:
AD-8953 Mounting Track (Requires AD-8954);
AD-8954 Panel Mounting Bracket

OPTIONS: None

Part Number	Description	Control Dial Range*
AT-8122	Remote setpoint adjuster with scale	20 to 120°F (6 to 49°C)
AT-8155	Remote setpoint adjuster with scale	50 to 250°F (10 to 121°C)
AT-8158	Remote setpoint adjuster with scale	55 to 85°F (13 to 29°C)
AT-8222-101	Scale for use with AT-8122 (Humidity)	20 to 100%
AT-8258-101	Scale for use with AT-8158 (Night Setback)	Deviation scale ±15°F (±8°C)
AT-8435	Remote Setpoint adjuster with scale For Use TS-8204 Only	50 to 450°F (10 to 232°C)
AT-8521	Remote Setpoint adjuster with scale	50 to 100°F (10 to 38°C)
AT-8522	Remote Setpoint adjuster with scale	30 to 80°F (1 to 26°C)
AT-8561	Remote Setpoint adjuster with scale	-40 to 160°F (-40 to 71°C)
AT-8562	Remote Setpoint adjuster with scale	0 to 200°F (-17 to 93°C)
AT-8563	Remote Setpoint adjuster with scale	40 to 240°F (4 to 116°C)

*Scales dual marked in °F and °C

Direct Acting

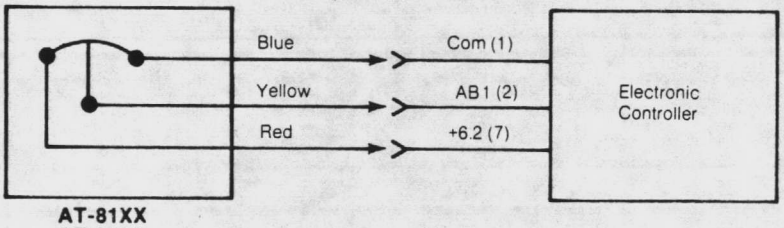

AT-81XX
AT-8435
AT-85XX

Reverse Acting

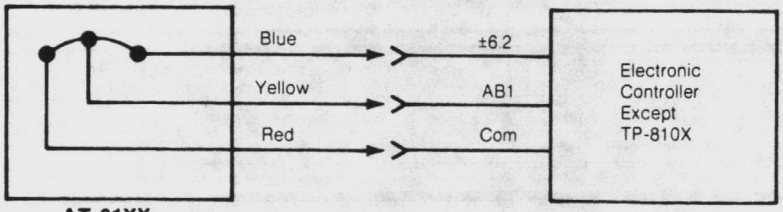

AT-81XX
AT-8435
AT-85XX

Note: For R.A. TP-810X See TP-810X

TT-1, TT-2, TT-3

BARBER COLMAN COMPANY

General Instructions

Solid State
Temperature Transmitter Module
Temperature Indication Transmitter
TSP-8101, TSP-8111

DEVICE INFORMATION

Identification

TSP-8101

The solid state temperature transmitter is a self-contained package. It incorporates several integrated circuit amplifiers and associated solid state components. The transmitter is designed to be track mounted in a local or central control panel. It is used in systems where temperature indication and/or control is required. The circuitry features a stable temperature bridge for use with a standard 1000 ohm sensor. The signal produced by the bridge is amplified and produces a linear 1 to 11 Vdc output over a –40 to 127°C (–40 to 260°F) range. This 1 to 11 Vdc output can be directly used for temperature indication in automation consoles. Further conditioning of this output in the transmitter module results in two more usable outputs. One output is compatible to, and is used for, operation of the two-input controller (CP-8102). The other is for driving a 1 to 11 Vdc indicating meter (ASP-500 Series) over a selected temperature range and span.

TSP-8111

This transmitter is for temperature indication only. It incorporates an amplifier and bridge to condition non-adjustable TS-8000 1000 ohm sensors to produce a 1 to 11 Vdc output signal. The output signal is applied to ASP-500 Series temperature indication meters which cover ranges through –40 to 116°C (–40 to +240°F). TSP-8111 is factory calibrated for use with ASP-561 meter, –40 to 71°C (–40 to 160°F) range. TSP-8111 must be field calibrated to other ASP-500 meters. A power supply is required and can be either 20 Vdc or 24 Vac.

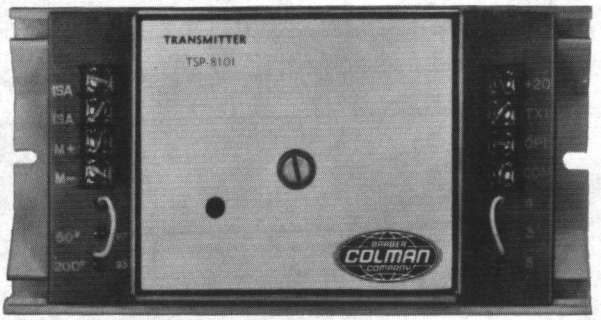

TSP-8101

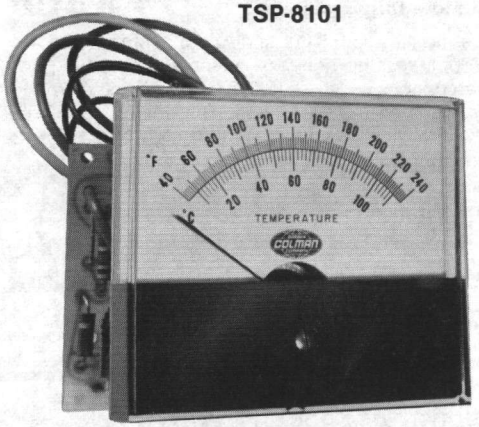

TSP-8111

(Mounted on ASP-563 meter) Meter Not Included.

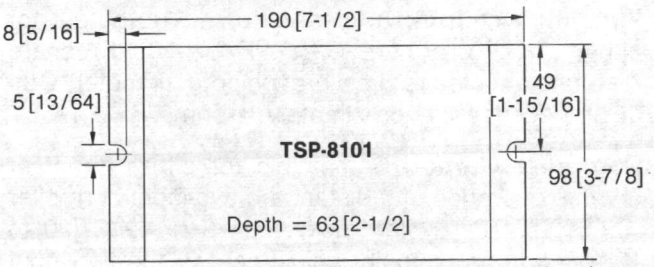

All Dimensions are in Millimeters with Inches following in brackets.

Figure 1

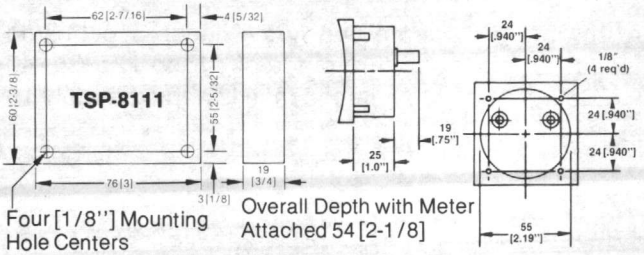

Figure 2

INSTALLATION

Requirements

TSP-8101

Space requirements are indicated by the dimensions shown in Figure 1. The TSP-8101 is designed primarily for track mounting in a local or central control panel. However, it can also be located inside the AD-8910 enclosure for remote field mounted installations. The module is constructed with screw type terminals for field and inter-module wiring connections. A jumper arrangement is used for obtaining the desired indication meter spans and also for direct or reverse outputs for operation of System 8000 controllers.

TSP-8111

The transmitter is designed primarily for direct attachment to a meter mounted on a panel face. It can also be mounted on SYZE-567 track using the AD-8952 adaptor plate in control cabinets when the meter is remotely mounted. See Figure 2 for dimensions of TSP-8111 and ASP-500 Series meters. TSP-8111 and an ASP-500 Series meter can also be mounted in an AT-221 enclosure (Figure 4).

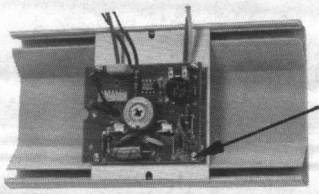

Cabinet Mounted

Figure 3

Mount the TSP-8111 to the AD-8952 adaptor plate mounting studs using four 4-40 X 5/16" round head screws as shown in Fig. 3. Install the SYZE-567 track in the cabinet using #8 or #10 sheet metal screws. Insert the AD-8952 into the track slots as shown.

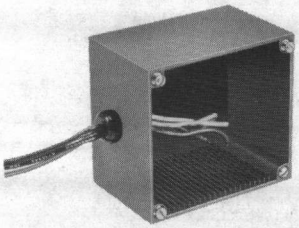

Figure 4

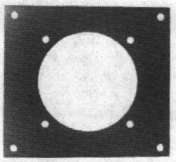

Wall Or Duct Mounting Enclosure **AT 221**

For direct mounting the TSP-8111 and ASP-500 Meter on a wall or a duct. The kit includes the housing, cover and mounting screws. Housing has an opening on the left side with a Heyco clamp to hold low voltage power and element leads. The enclosure dimensions are 96mm [3-3/4] wide by 86mm [3-3/8] high by 61mm [2-3/8] deep. Two mounting holes are on the back of the case.

PERFORMANCE

TSP-8101

Ambient Operating Temperature: 4 to 58°C (40 to 135°F).

Power Supply: 20±1 Vdc, 13 mA.

Input: Non-adjustable 1000 ohm Balco sensor.

Indication Output: A linear 1 to 11 Vdc output for either 27.5°C or 110°C (50°F or 200°F) span, featuring a meter zero calibration potentiometer. Output impedance is approximately 10 ohms.

Controller Output: Compatible for either direct or reverse operation of the standard two-input controller (CP-8102). The system uses the −6 to 49°C (20 to 120°F) internal setpoint adjustment of the two-input controller, or any of the AT-8100 Series remote setpoints.

Automation Console Output: A linear 1 to 11 Vdc output for a temperature range of −40 to 127°C (−40 to 260°F). The output impedance is approximately 10 ohms.

TSP-8111

Ambient Temperature: 4 to 58°C (40 to 135°F).

Power Supply: 20 Vdc ±1 at 12 mA, or 24 Vac ±10% at 20 mA.

Input: Non-Adjustable 1000 ohm Balco sensor.

Output: A linear 1 to 11 Vdc output for either 27.5°C (50°F) or 110°C (200°F) spans. Up to five identical ASP-500 meters will indicate from one TSP-8111. Output impedance is approximately 10 ohms. The load resistance must not be less than 3000 ohms.

Connections: Two terminal clips (+ and −) connect directly to a meter. Two black sensor leads, blue and red power leads, blue (−) and yellow (+) leads connect to a remote meter. All leads are 152mm (6") long.

Accuracy: 2% of system span used.

Sensor Lead Length: Can be used with runs up to 305m (1000 ft.) using 18 ga. twisted pair. Recalibration is required when leads exceed 91m (300 ft.).

TSP-8111 can be used with the following non adjustable 1000 ohm sensors.

Part Number	Description
TS-8101	Room
TS-8131	Room Button Type
TS-8201	Duct / Immersion
TS-8241	Diffuser
TS-8261	Light Fixture
TS-8405	5' Averaging
TS-8422	22' Averaging
TS-8501	Outdoor

Procedure

TSP-8101

The module is provided with a 190mm (7-1/2") long by 101mm (4") wide piece of mounting track. This permits quick and easy panel installation in either a horizontal or vertical position. Make all connections in accordance with job wiring diagrams, and comply with all national and local electrical codes. Wiring terminations are made on screw terminals located on the end of the printed circuit board. See Figure 8 for module wiring.

TSP-8111

Make all connections in accordance with the job wiring diagram and comply with national and local electrical codes. Clip out jumper J1 when 24 Vac power is used. Refer to Figure 7 for polarity of meter mounting clips. Match polarity to meter. Remove the adhesive backing from the meter mounting pad on TSP-8111 and press meter terminals firmly into the clips. The yellow lead is (+) and blue is (−). Refer to Figure 5 for single point temperature indication and to Figure 6 for multipoint indication applications. One meter can be used with any number of points of indication when using pushbutton switches.

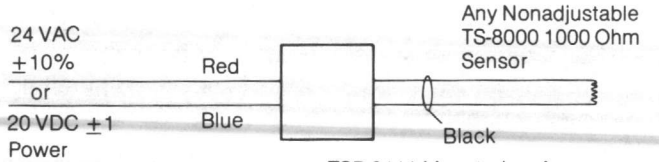

Red is (+) and Blue is (−) when 20 VDC Power is Used

TSP-8111 Mounted on An ASP-500 Series Meter (Match Polarity TSP-8111 to Meter)

NOTE: Up to five identical remote ASP-500 meters will indicate from one TSP 8111. Tape off the yellow lead when TSP-8111 is mounted on the meter.

Figure 5

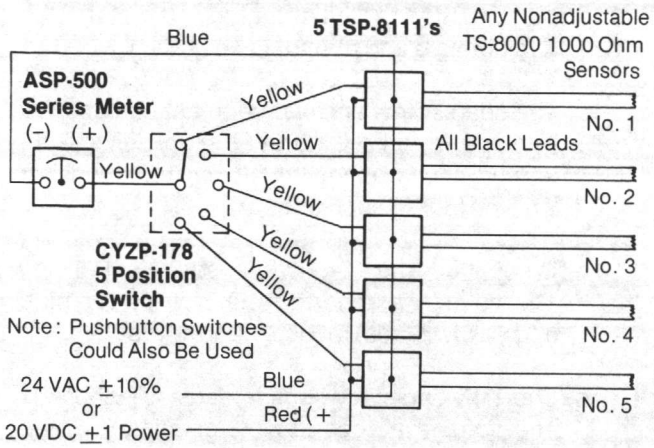

Figure 6

RUN/ADJUST

Adjustment

TSP-8101

The TSP-8101 has available a zero adjustment as well as 27.5°C or 110°C (50°F or 200°F) span selection pins for meter indication. Selection pins are available for either direct or reverse operation of the two-input controller.

TSP-8111

The TSP-8111 meter zero calibration potentiometer, span selection screw, 20 Vdc / 24 Vac jumper (J1) are provided and shown in Figure 7. The span of TSP-8111 must match the span of the meter 27.5°C or 110°C (50°F or 200°F).

Calibration

TSP-8101

1. Apply + 20 Vdc to terminals + 20 and COM of both the TSP-8101 and CP-8102.

2. Remove 1K sensor (ISA terminals of TSP-8101) and replace with 1K ±1% wire wound resistor (SYZE-12987).

3. Adjust calibration potentiometer in TSP-8101 until a 21°C (70°F) meter reading (ASP-500) is obtained.

4. Connect a VOM (10,000 ohms per volt) to OP1 and COM of CP-8102. Adjust setpoint A to 21°C (70°F) and the throttling range to 1.6°C (3°F) on the CP-8102. Adjust bridge A calibration potentiometer until a CP-8102 output of 7.5 Vdc is obtained.

5. The system is calibrated.

TSP-8111

1. Apply 20 Vdc or 24 Vac to the red and blue leads.

2. With the sensor in place, determine the temperature of the media with an accurate thermometer.

3. Turn the zero calibration potentiometer until the media temperature is shown on the ASP-500 Series meter. [Remove the span screw and washer for use with 27.5°C (50°F) span meters.]

4. The system is calibrated.

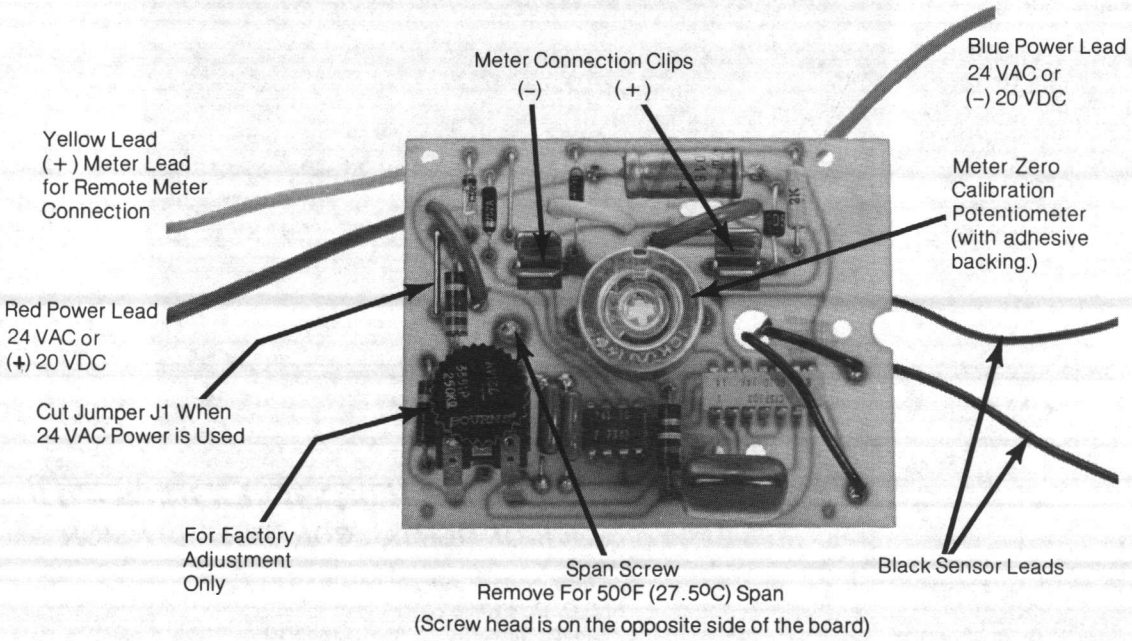

Figure 7

REPAIR

TSP-8101

1. Check wiring per job wiring diagram. (See Fig. 8)

2. Measure +20 Vdc supply using a VOM (10,000 ohms per volt) between +20 and COM of either the TSP-8101 or CP-8102.

3. Connect a VOM between OP1 and COM of CP-8102. A 1 to 15 Vdc output reading should be obtained by rotating setpoint A from fully ccw to cw position.

4. Consult EN 111 for additional information.

TSP-8111

1. Check wiring per job wiring diagram.

2. Measure supply voltage using a VOM. It must be to specifications. Note: Jumper J1 must be cut when 24 Vac power is used.

3. The span of TSP-8111 must match the meter. Use a VOM to obtain b and c readings below.

   a. The span screw and washer must be securely in place for 110°C (200°F) span units. Both screw and washer must be removed for 27.5°C (50°F) span units.

   b. Disconnect the TS-8000 sensor at TSP-8111. The voltage across the meter clips (or blue and yellow leads) must exceed 11 Vdc.

   c. Short the two black sensor leads of TSP-8111. The voltage across the meter clips (or blue and yellow leads) must be less than 1 Vdc.

4. In the event TSP-8111 is operating correctly, check the meter per EN 111, C 1.2 Page 13, Step 4 and TS-8000 sensor.

5. In the event the meter and sensor are operating correctly, but TSP-8111 is not, replace TSP-8111. Repair is not practical.

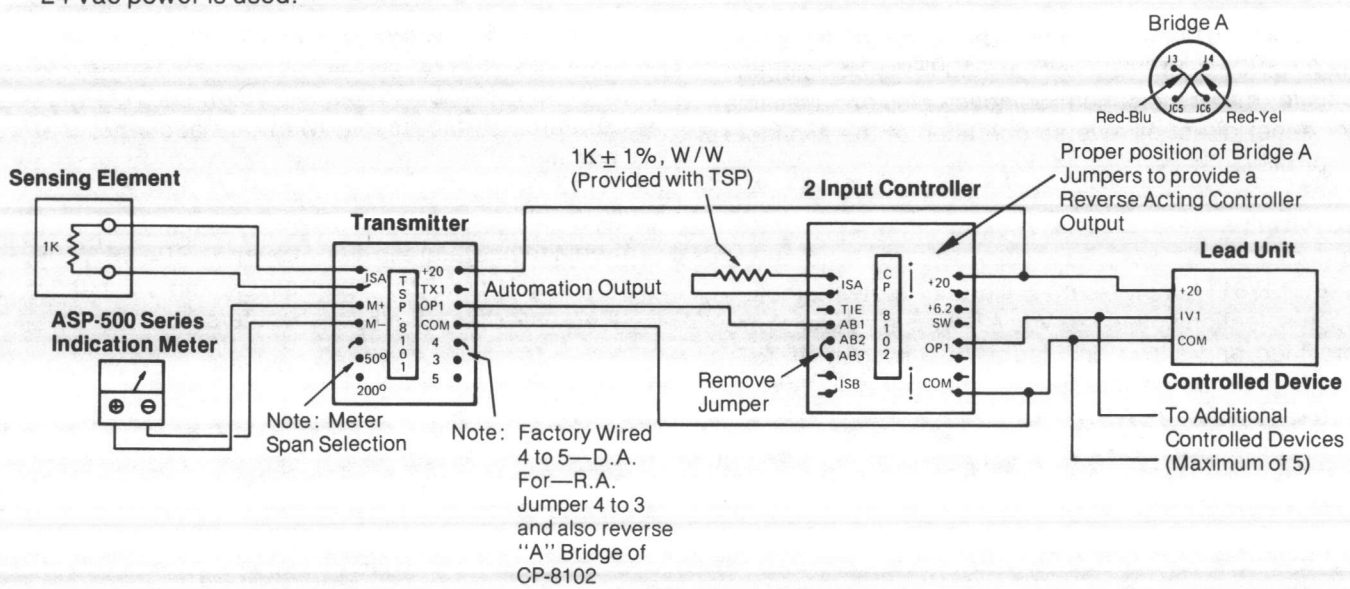

Figure 8

Barber-Colman Company
ENVIRONMENTAL CONTROLS DIVISION

1354 Clifford Avenue
P.O. Box 2940
Loves Park, IL U.S.A. 61132-2940

PC-1

General Instructions

Power Demand Computers
PC-8402 and PC-8403
Pulse and Current Sensing

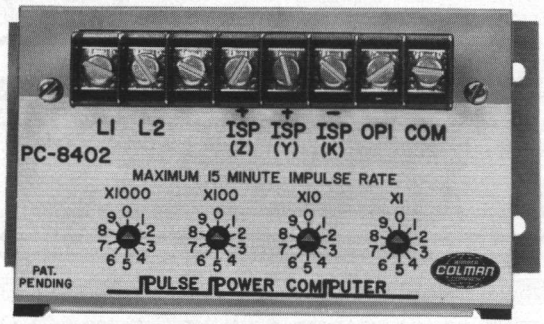

Pulse Power Computer
PC-8402

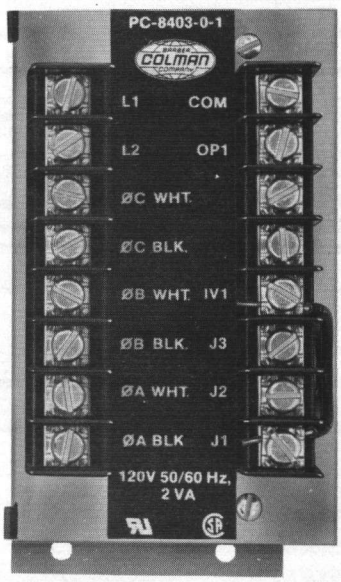

Current Probe
Power Computer
PC-8403

USES

With the supply of energy becoming critical and more expensive, we find the user employing energy management equipment to limit his usage and thus his costs. Many of these systems require a power transducer to provide a necessary power proportional signal. The PC-8402 and PC-8403 Power Computers supply this signal which can be applied to energy management systems recorders. These power computers are solid state electronic devices completely compatible with System 8000.

OPERATION

PC-8402

The PC-8402 Pulse Power Computer provides an output voltage of 1.5 to 10 Vdc in proportion to incoming power pulses generated by the utility company's isolation relays or other pulse signals. The computer will accept either a two-wire or three-wire alternating contact closure input. The PC-8402 sets its output voltage with respect to the number of pulses set on its dials and the rate of pulses currently applied to the device.

PC-8403

The PC-8403 current probe power computer provides an output voltage of 1.0 to 10 Vdc in proportion to the incoming current or currents from current transformers. These current transformers are located on the A, B or C phase lines of the secondary of the transformer supplying total building power. The computer will provide its output voltage with either 1, 2, or 3 current transformer inputs. The 3 current transformer inputs will provide the greatest accuracy in determining the total 3 phase system power. The PC-8403 sets its output voltage with respect to the level of input from the current transformers. The current transformer's maximum output must be five amperes with maximum rated input current.

FEATURES

PC-8402

1. Adjustable calibration from 0.1 to 11.1 pulse/second.
2. Single contact input (2-wire) or double contact alternating input (3-wire).
3. Output voltage linear with input pulses.

PC-8403

1. Adaptable to any power system through current transformer selection.
2. Operates on 1, 2 or 3 current transformer inputs.
3. Output voltage linear with input currents (1-5 amperes).

COMMON TO BOTH

1. Rugged plastic construction.
2. Small in size.
3. Easy-access screw terminal connections.
4. UL recognized.
5. Compatible with System 8000.

Table 1. Power Computer Selection Chart

Building Service			PC-8403 Current Probe Power Computer		PC-8402 Pulse Power Computer	
			Current Transformer Input	Power Signal	Input Signal	Power Signal
Voltage	Phase	Wires	Number of Current Transformers (Obtain Locally)	120 Vac +10 Vac -15 Vac 2 VA	Contact Closures from Isolation Relays (Obtain Locally) 2 or 3 Wire	120 Vac +10 Vac -15 Vac Less than 0.5 VA
Any	1	2	1			
	1	3	2			
	3	3	1, 2 or 3			
	3	4	1, 2 or 3			

PRE-INSTALLATION

Open the carton and visually inspect the device for part number and obvious damage before proceeding with the installation.

The four required mounting screws are not provided.

INSTALLATION

The power computers are designed for surface mounting. Locate these computers so they are not subjected to severe vibration, shock or ambient conditions. Ambient ratings are 40°F (4°C) to 140°F (60°C). Refer to Figure 1 for mounting hole dimensions.

DIMENSIONS

All Dimensions in Inches

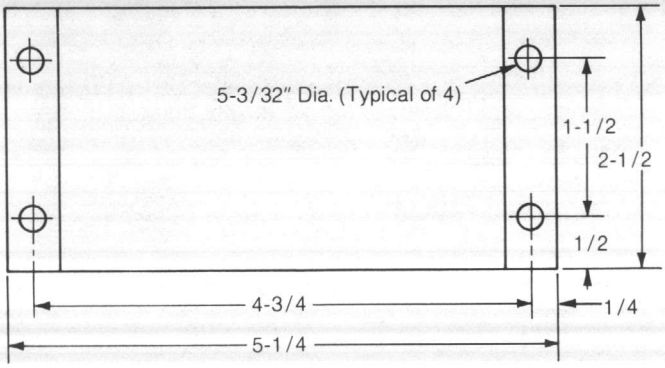

Base View — Shows mounting hole locations

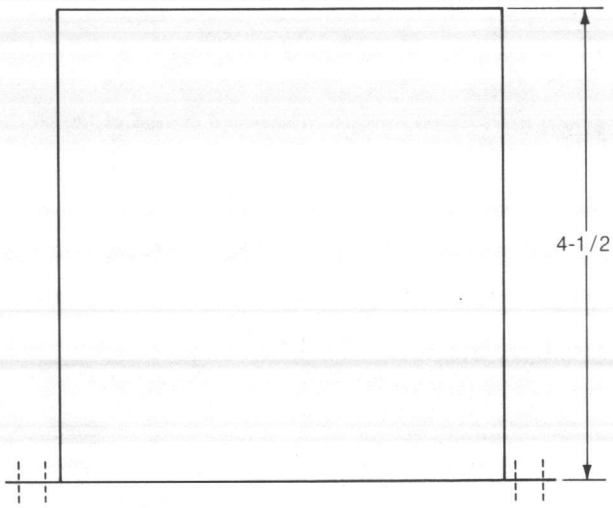

Side View — Maximum height shown here includes terminals

Figure 1.
Mounting Dimension for Both PC-8402 and PC-8403

INPUT

The PC-8402 Pulse Power Computer input wiring should be per Figure 2, using two or three 18 gauge wires. These wires do not have to be twisted or placed in conduit. The length may be up to 2500 feet.

OUTPUT

The PC-8402 output wiring should be per Figure 2 using 18 gauge twisted pair cable (6 turns per foot) or equivalent. Maximum distance of 1000 feet permissible. Never run leads in same conduit with line voltage.

CAUTION

Shielded cable (Belden 8422 or equivalent) must be used when it is necessary to install these OP1-COM signal leads in the same conduit with power wiring or when it is known that high RFI/EMI generating devices are near. Ground the shielded cable at the COM (-) terminal only.

Typical Wiring Connections for kW Pulse Signal Isolation Relays

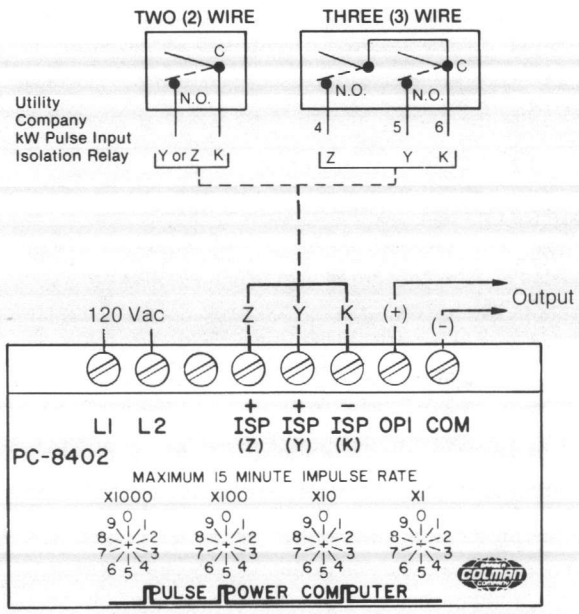

PC 8402 Pulse Power Computer Input Wiring

Caution
Minimum Dial Setting to be 200.

Figure 2. Typical Wiring Connections for PC-8402

PC-8402 PULSE POWER COMPUTER

WIRING

Make all connections in accordance with job wiring diagrams and in compliance with national and electrical codes.

CALIBRATION

There is no internal calibration for the PC-8402 pulse power computer.

FIELD ADJUSTMENT

Step 1. Determine the maximum number of pulses in the demand period.

Step 2. Calculate the number of pulses this rate will give in 15 minutes. (Example: No. 1 is 3000 in 30 minutes, No. 2 will be 1500.)

Step 3. Set dials to 1500 left to right. (See Figure 3.) Minimum setting is 200.

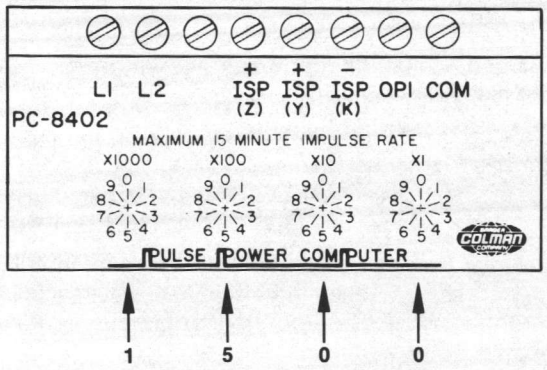

Figure 3.

CHECKOUT

The computer can be checked out by putting into the ISP+ and ISP- terminals the number of contact closures that are shown on the four dials in a 15 minute period of time. The unit must be powered by 120 Vac 50/60 Hz. The output from OP1 and COM will be 10 ±.2 Vdc under these conditions.

SERVICE

There is no field service for this unit. If defective, return to factory for repair.

PC-8403 CURRENT PROBE POWER COMPUTER

WIRING

Make all connections in accordance with job wiring diagrams and in compliance with national and electrical codes.

INPUT

The PC-8403 Current Probe Computer input wires from the current transformers should be wired per Figure 4 and are to be kept shorted together until installed on the terminals.

Distance vs. wire gauge for the leads between the current transformer and the PC-8403 are as follows:

Table 2.

Distance in Feet	Wire Gauge
200	#14
320	#12
500	#10
800	# 8

Jumper wires should be placed on the proper terminals depending on the particular system being measured. These wires must be installed to make the computer operate.

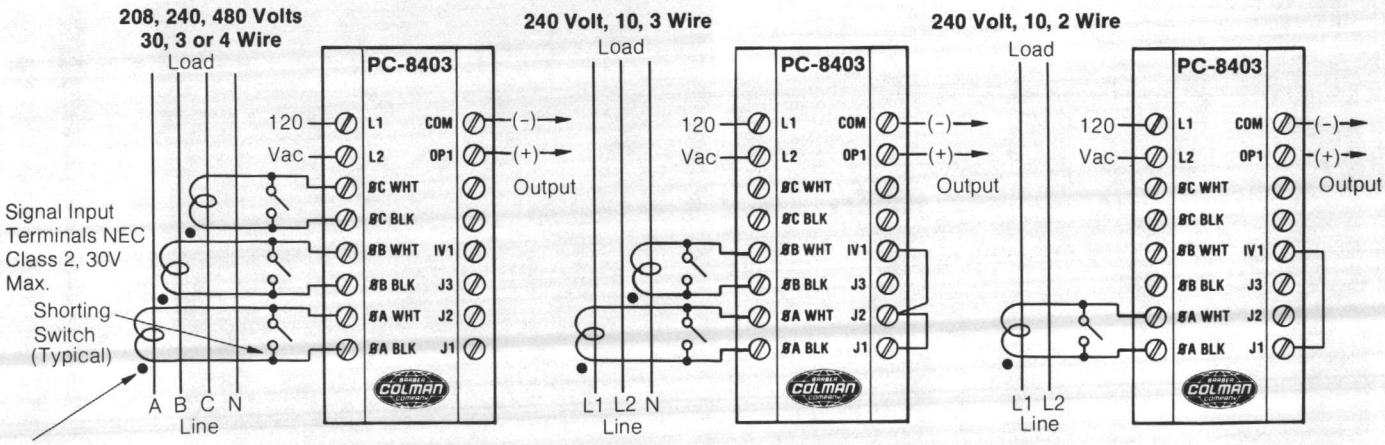

NOTE: Dot on current transformers should face line side unless otherwise noted.

Current Sensing Options

1. 0A, 0B, 0C— Jumper J1, J2 and J3 to IV1.
2. 0A, 0B — Jumper J1 and J2 to IV1.
3. 0A — Jumper J1 to IV1.

CAUTION: Electric shock hazard. CT secondaries must never be open when attached to service conductors. Install shorting switch on CT secondaries to permit removal of CT leads from PC-8403 during servicing.

Figure 4. Typical Wiring Connections for Load Current Sensing PC-8403

OUTPUT

The PC-8403 output wiring should be per Figure 4 using 18 gauge twisted pair cable (6 turns per foot) or equivalent. Maximum distance of 1000 feet permissible. Never run leads in same conduit with line voltage.

CAUTION

Shielded cable (Belden 8422 or equivalent) must be used when it is necessary to install these OP1-COM signal leads in the same conduit with power wiring or when it is known that high RFI/EMI generating devices are near. Ground the shielded cable at the COM (-) terminal only.

Table 3. Current Transformer Selection Chart

Maximum Building kW	Current Transformer Ratio				
	208V 30	240V 30	480V 30	240V 10 2 Wire	240V 10 3 Wire 2 Cts Required
50	125/5	125/5	—	200/5	100/5
100	250/5	250/5	125/5	400/5	200/5
150	400/5	400/5	200/5	600/5	300/5
200	500/5	500/5	250/5	800/5	400/5
250	700/5	600/5	300/5	1000/5	500/5
300	800/5	700/5	350/5	1200/5	600/5
350	900/5	800/5	400/5	1500/5	700/5
400	1000/5	1000/5	500/5	1600/5	800/5
450	1200/5	1000/5	600/5	1800/5	900/5
500	1500/5	1200/5	600/5	2000/5	1000/5
550	1500/5	1500/5	700/5	2500/5	1200/5
600	1600/5	1500/5	700/5	2500/5	1200/5
650	1800/5	1500/5	800/5	2500/5	1500/5
700	2000/5	1600/5	800/5	3000/5	1500/5
750	2000/5	1800/5	900/5	—	
850	2500/5	2000/5	1000/5	—	
900	2500/5	2000/5	1000/5	—	
1000	3000/5	2500/5	1200/5	—	
1300		3000/5	1600/5	—	
1500			1800/5	—	
1700	—		2000/5	—	
2100	—		2500/5	—	
2500	—		3000/5	—	

CALIBRATION

There is no calibration for the PC-8403 current probe power computer.

CHECKOUT

The current probe power computer can be checked out by applying 5 amps RMS ac to any of the three desired current transformer inputs (see Figure 4) and jumpering the IV1 terminal to the corresponding phase input J1, J2 or J3. The output OP1 to COM should measure 10 ±.2 Vdc. Lower RMS currents will produce proportionally lower voltage outputs. See Figure 3.

SERVICE

It is necessary to follow the procedure below if PC-8403 is to be disconnected for servicing.

Step 1. Open all disconnects which provide power to the panel in which PC-8403 is installed.

Step 2. Close the switch provided for shorting the current transformer secondaries. This switch should have been installed by the local utility company or electrical contractor and will be located outside the panel containing the PC-8403.

If a current transformer shorting switch has not been installed, it will be necessary to open the disconnect which supplies current to the conductors monitored by the current transformers.

Step 3. CAUTION: ELECTRIC SHOCK HAZARD! DO NOT REMOVE THE CURRENT TRANSFORMER WIRING ATTACHED TO THE 0A, 0B, OR 0C TERMINALS UNTIL THE CT SECONDARIES ARE SHORTED OR NO CURRENT IS FLOWING IN THE CONDUCTORS MONITORED BY THE CURRENT TRANSFORMERS.

Step 4. PC-8403 can now be removed for replacement.

Step 5. Install the new PC-8403. Connect all wiring to appropriate terminals.

Step 6. Be certain that the current transformer secondaries are connected to PC-8403. Open the CT shorting switch.

Step 7. Close the panel disconnect to place PC-8403 back in service.

Barber-Colman Company
ENVIRONMENTAL CONTROLS DIVISION
1300 Rock Street, Rockford, Illinois, U.S.A., 61101

LITHO IN U.S.A.

F-18552 BK

AQ-2 T-1
T-2 AQ-1
TS-1 T-8

General Instructions

TC-4100 Series
TC-4200 Series
Bulb Thermostats
Return Air Thermostats

For on-off control of media temperature in ducts, tanks, liquid lines, etc.

TC-4100 Series **one stage** units control one electrical circuit. Available in single or dual bulb configurations. (See Performance Table.)

TC-4200 Series **two stage** units control two electrical circuits in sequence. Available in single or dual bulb configurations. (See Performance Table.)

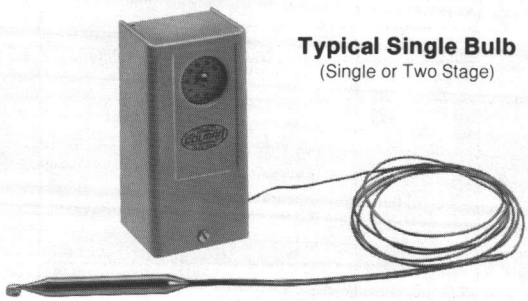

Typical Single Bulb
(Single or Two Stage)

Dual bulb units are used to vary the control point of the controlled media as a function of outside air temperature. The ratio specified is outdoor to indoor. A unit with a 1 to 1-1/2 ratio will increase the water temperature 1-1/2°F for a 1°F decrease in outdoor temperature.

Air bulb units feature a coiled, fast responding air bulb. Used in return air control applications.

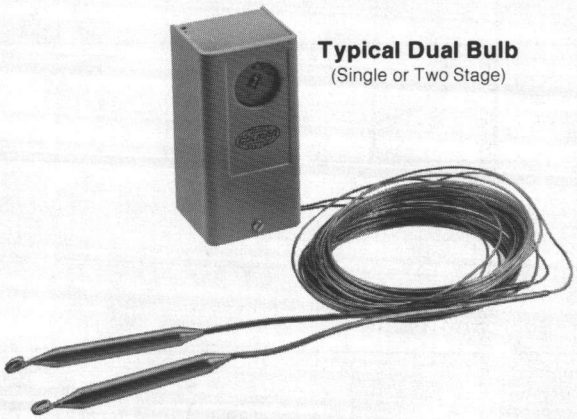

Typical Dual Bulb
(Single or Two Stage)

Device: Liquid filled thermal element actuates one snap acting SPDT switch per stage. Large color coded terminals. Setpoint adjustment dial plate is marked in °F on one side and °C on the other. The thermal differential is adjustable within the limits shown in the performance table. The mechanism is enclosed in a metal case and the cover, and has 1/2-inch to 3/4-inch conduit opening in the bottom of the case. Remote bulbs are suitable for immersion, duct, or outside air mounting.

Dimensions

Bulb Units: 2-1/4" (57 mm) Wide × 4-5/8" (117 mm) High × 2" (51 mm) Deep.

Air Bulb Units: 2-1/4" (57 mm) Wide × 9" (229 mm) High × 2" (51 mm) Deep.

Typical Air Bulb
(Single or Two Stage)

Electrical Rating: All Units Except TC-4115*

Switch Rating (50/60 Hz)	24V	120V	240V
Full Load Amps	9.8	9.8	8.0
Locked Rotor Amps	58.8	58.8	48.0
Pilot Duty VA	60	360	360
Non-Inductive Amps (Resistive)	—	—	—
Single Stage	22	22	22
Two Stage	16	16	8.0

*TC-4115 for System 8000 and dry circuit switching.
Electrical Rating: 1.0 amp at 24 Vac; .25 amp at 24 Vdc.

Performance and Selection Table

Type	Part Number	Setpoint Adjustment Range	Dual† Bulb Ratio	Dimensions			Differential		Maximum Safe Bulb Temperature	Case Ambient Temperature
				Capillary (Copper)	Bulb (Copper)		Factory Set	Adjustable		
Single Stage Single Bulb	TC-4111	-40 to 120°F		6′	3/8 × 4″		3°F	3 to 16°F	170°F	-40 to 150°F
	TC-4111-020			20′						
	TC-4112	100 to 260°F		6′					310°F	
	TC-4115*	-40 to 120°F		10′ Armored					170°F	
	TC-4121									
	TC-4122	100 to 260°F							310°F	
	TC-4123	190 to 350°F							400°F	
Single Stage Dual Bulb	TC-4151	70 to 120°F	1:1-1/2 **	30′ Each Bulb	Indoor 3/8 × 4″	Outdoor 3/8 × 5-1/2″	3°F	1.5 to 10°F	Total of indoor and outdoor temperatures must not exceed 280°F	-40 to 150°F
	TC-4152		1:1		3/8 × 4″	3/8 × 4″		3 to 16°F		
One Stage Air Bulb	TC-4166	50 to 90°F		None	Coiled 2-1/2 × 2″		2°F Fixed		-40 to 145°F Safe Bulb Range	-40 to 150°F
Two Stage Single Bulb	TC-4211	-40 to 120°F		6′	3/8 × 4″		3°F	Per Stage Fixed Between Stages 2 to 10°F	170°F	-40 to 150°F
	TC-4221			10′ Armored						
	TC-4222	100 to 260°F							310°F	
	TC-4223	190 to 350°F							400°F	
Two Stage Dual Bulb	TC-4251	70 to 120°F	1:1-1/2 **	30′ Each Bulb	Indoor 3/8 × 5-1/2″	Outdoor 3/8 × 4″	3°F	Per Stage Fixed Between Stages 1.5 to 6.5°F	Total of indoor and outdoor temperatures must not exceed 280°F	-40 to 150°F
	TC-4252		1:1		3/8 × 4″	3/8 × 4″		2 to 10°F		
Two Stage Air Bulb	TC-4266	50 to 90°F		None	Coiled 2-1/2 × 2″		3°F	Per Stage Fixed 2°F Between Stage Adj. 1 to 5°F	-40 to 145°F Safe Bulb Range	-40 to 150°F

*TC-4115 for System 8000 and dry circuit switching. Electrical Rating: 1.0 amp at 24 Vac; .25 amp at 24 Vdc.

**TC-4151 and TC-4251 — For 1-1/2:1 ratio reverse bulbs and use extra dial supplied with unit.

†First number of reset ratio typically indicates outdoor air temperature change required to increase the setpoint by the second number.

Ratio Selection Table

Outdoor Temperature (°F)	Ratio	Change in Water Temperature for Different Ratios as Outdoor Temperature Drops from 70°F to Design Temperature					
		Dial Set at 70°F	Dial Set at 80°F	Dial Set at 90°F	Dial Set at 100°F	Dial Set at 110°F	Dial Set at 120°F
-30	1 to 1-1/2	70 to 220	80 to 230	90 to 240	100 to 250	110 to 260	120 to 270
	1 to 1	70 to 170	80 to 180	90 to 190	100 to 200	110 to 210	120 to 220
	1-1/2 to 1	70 to 137	80 to 147	90 to 157	100 to 167	—	—
-20	1 to 1-1/2	70 to 205	80 to 215	90 to 225	100 to 235	110 to 245	120 to 255
	1 to 1	70 to 160	80 to 170	90 to 180	100 to 190	110 to 200	120 to 210
	1-1/2 to 1	70 to 130	80 to 140	90 to 150	100 to 160	—	—
-10	1 to 1-1/2	70 to 190	80 to 200	90 to 210	100 to 220	110 to 230	120 to 240
	1 to 1	70 to 150	80 to 160	90 to 170	100 to 180	110 to 190	120 to 200
	1-1/2 to 1	70 to 123	80 to 133	90 to 143	100 to 153	—	—
0	1 to 1-1/2	70 to 175	80 to 185	90 to 195	100 to 205	110 to 215	120 to 225
	1 to 1	70 to 140	80 to 150	90 to 160	100 to 170	110 to 180	120 to 190
	1-1/2 to 1	70 to 117	80 to 127	90 to 137	100 to 147	—	—
+10	1 to 1-1/2	70 to 160	80 to 170	90 to 180	100 to 190	110 to 200	120 to 210
	1 to 1	70 to 130	80 to 140	90 to 150	100 to 160	110 to 170	120 to 180
	1-1/2 to 1	70 to 110	80 to 120	90 to 130	100 to 140	—	—
+20	1 to 1-1/2	70 to 145	80 to 155	90 to 165	100 to 175	110 to 185	120 to 195
	1 to 1	70 to 120	80 to 130	90 to 140	100 to 150	110 to 160	120 to 170
	1-1/2 to 1	70 to 103	80 to 113	90 to 123	100 to 133	—	—
+30	1 to 1-1/2	70 to 130	80 to 140	90 to 150	100 to 160	110 to 170	120 to 180
	1 to 1	70 to 110	80 to 120	90 to 130	100 to 140	110 to 150	120 to 160
	1-1/2 to 1	70 to 97	80 to 107	90 to 117	100 to 127	—	—

Dual Bulb Selection

On the dual bulb units, indoor and outdoor bulbs are determined by the ratio selected. See Performance and Selection Table. Ratio refers to the outdoor air temperature change compared to the water temperature change. The dial setpoint is the water temperature setpoint when the outdoor temperature is 70°F.

To select ratio, it is necessary to know only: (1) outdoor design temperature, (2) maximum water temperature at outdoor design temperature, and (3) desired water temperature at 70°F outdoors. Use the Ratio Selection Table to determine the required ratio based on this information and set the dial per item (3). NOTE: If a 1-1/2:1 ratio is selected, the extra dial supplied with the unit must be used.

Example: Select ratio for an installation with a -10°F design temperature and estimated supply water temperatures of 75°F at 70°F outdoors and 125°F at -10°F outdoors. From Ratio Selection Table, -10°F for 1-1/2:1 ratio, note by interpolation (70°F to 123°F with dial at 70°F, 80°F to 133°F with dial at 80°F) that water temperature varies from 75°F to 128°F as outdoor temperature drops from 70°F to -10°F.

For this application, the 1-1/2:1 ratio should be selected. The extra dial supplied with the unit would be used, and the dial set at 75°F.

Options

Single bulb units are available with optional capillary lengths of 20′ or 45′.

Accessories: (Order Separately)

Part No.	Description	
AT-201*	Bulb Well	Copper, 3/4″ MNPT 9-1/2″
AT-203*		Stainless, 3/4″ MNPT 9-1/2″
AT-206		Copper, 1/2″ MNPT 4-1/2″
AT-208	Duct Mounting Kit for Bulb	
AT-209	Liquid Line, or Tank, Bulb Mounting Kit. A Bulb Well is recommended. (Required with AT-201 or AT-203.)	
AT-210	Concealed Adjustment Kit. Includes plate to conceal setpoint adjustment and lock cover screw.	
AT-211	Outside Bulb Shield	

*Requires AT-209 Bulb Mounting Kit.

Immersion Well AT-20X

Bulb Duct Mounting Kit AT-208

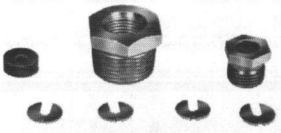

Liquid Line or Tank Bulb Mounting Kit AT-209 (Also Required with AT-201 or AT-203 Well)

Concealed Adjustment Kit AT-210

Pre-Installation

Refer to the INSTALLATION and Performance Data applicable to the part number of the device being installed. Make a visual inspection of the device for obvious signs of damage. Avoid locations where excessive moisture, corrosive fumes, vibration or high ambient exists.

Installation

Location

Locate the device allowing proper distance to the bulb location. The case can be mounted in any position. Refer to Figure 1 for case dimensions.

Procedure

Remote Bulb Models
Air Bulb Models — Mounting in Return Air Duct

1. Remove cover and provide 2 holes for #10 round head screws using the housing as the template or by using the dimensions shown in Figure 1.
2. Partially insert the mounting screws in the screw holes. Fit the housing over the screws, slide housing down on the screws and tighten the screws.

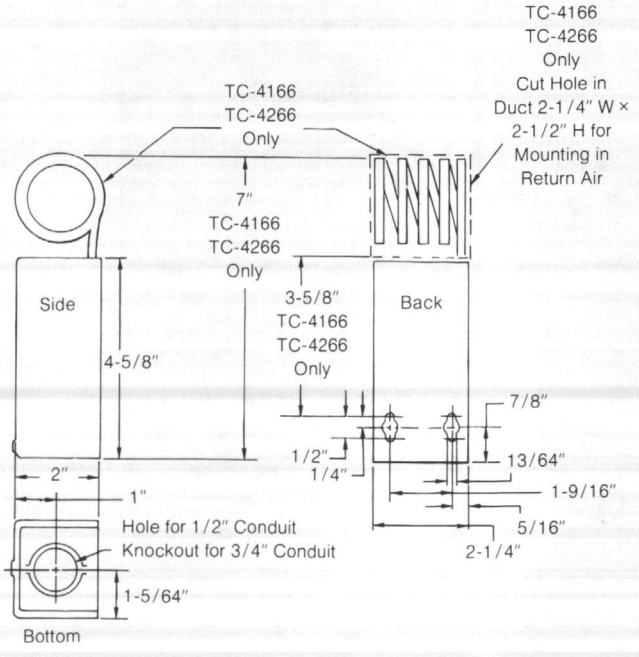

Figure 1. Case Dimensions

Checkout

After installing a thermostat, make an initial check of the switching action. Verify the switch action by listening to the switch contacts.

1. Turn the setpoint dial to a temperature above ambient. This should cause the thermostat to switch, making orange to brown.
2. Turn the setpoint dial setting down gradually. Orange to brown must break, making orange to red.
3. Compare the differential of the device to the differential shown on the performance charts by turning the dial. The differential of the devices is the difference in dial reading between the make of orange to brown and the make of orange to red on single switch units.

Run/Adjust

Setpoint

Screwdriver adjustment. Scales dual marked °F on front and °C on back. To change scale, remove spring retaining ring, select scale and replace retaining ring.

Differential Adjustment

The differential is adjustable by turning the adjustor located on side of device (see Figure 10).

Single stage: Each line represents approximately 3°F change.

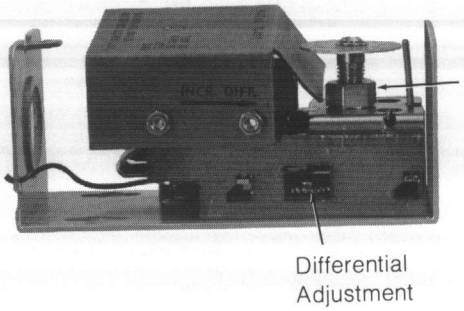

Figure 10

Two stage: Each notch represents approximately 2°F change between stages. (Differential per switch is fixed.)

To adjust differential:

1. Disconnect power to unit.
2. Remove cover.
3. Turn adjustor to approximately desired position.
4. Check out by turning dial and noting dial readings where switch contacts make.
5. After changing differential, recalibrate. See Service and Repair.

Service and Repair

Calibration

1. With all power disconnected, soak bulb(s) for 10 minutes at known temperature (must be 70°F for dual bulb).
2. Turn dial and note where switch contacts make.
3. Turn dial midway between click points.
4. Turn the calibration nut (located under dial) until the temperature of the bulb is indicated on the dial. (See Figure 10.)

NOTE

On two-stage units follow above procedure. "LO" switch is first stage on cooling applications. "HI" switch is first stage on heating applications.

Repair

Field repair is not recommended. Replace defective device.

Barber-Colman Company
ENVIRONMENTAL CONTROLS DIVISION

1354 Clifford Avenue
P.O. Box 2940
Loves Park, IL U.S.A. 61132-2940

Air Bulb Models

Mounting Outside of Return Air Duct

1. Prepare duct for mounting by cutting hole and providing mounting screw holes per Figure 1.
2. Fabricate a cover as shown in Figure 2.
3. Carefully roll bulbs toward back of unit and insert through 2-1/4" × 2-1/2" hole.
4. Remove cover and attach unit to duct with #10 screws.
5. Attach cover over 2-1/4" × 2-1/2" hole.

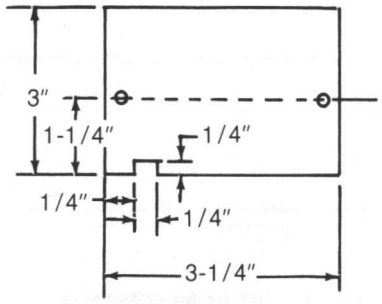

Figure 2. Field Supplied Duct Hole Cover Plate

Remote Bulb Mounting — Duct and Outdoor

Maximum insertion length (6 inches). Maximum safe bulb temperature above scale range. For dual bulbs, total of indoor and outdoor bulb temperatures must not exceed (280°F).

Duct: Install bulb with AT-208 kit as shown in Figure 3.

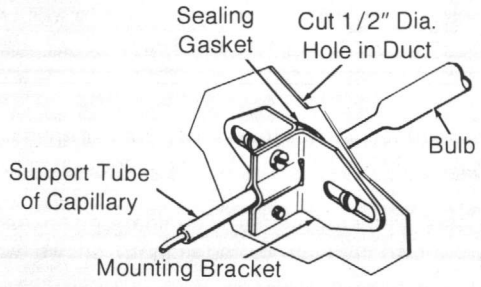

Figure 3. Duct Mounting with AT-208

Outdoor: Install with AT-211 kit as shown in Figure 4.

1. Mount bulb to outside wall or surface with bulb clip.
2. Place shield over bulb and fasten to mounting surface.

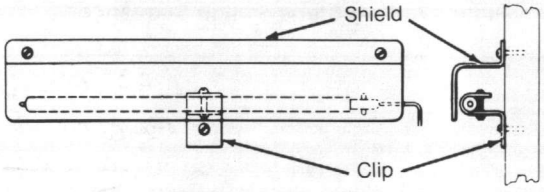

Figure 4. Outdoor Mounting with AT-211

Bulb Mounting — Liquid Line and Tank

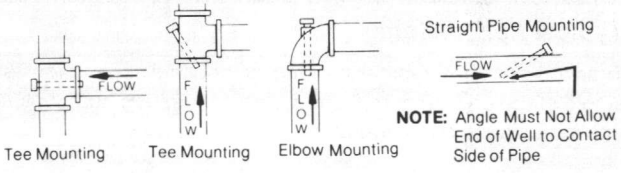

Installation Hardware and Application Limitations

Part No.	Description	Mtg. Fitting	Insertion Size	Applications Limitations at 250°F Fluid Temp.*		Installation Per Figure
				Max. Recommended Velocity (FPS)	Max. Recommended Static Press. (PSIG)	
AT-201	Copper Bulb Well**	3/4" MNPT	1/2" Dia. O.D. 9-1/2" Long	11	250	5
AT-203	Stainless Steel Bulb Well**			20	500	
AT-206	Copper Bulb Well	1/2" MNPT	1/2" Dia. O.D. 4-1/2" Long	11	250	5A
AT-209†	Bulb Mounting Kit	3/4" MNPT	Length of Bulb	4	150	5

*Max. Recommended Fluid Temperature is 350°F.
**Requires AT-209.
†Recommended Installation is with a Bulb Well.

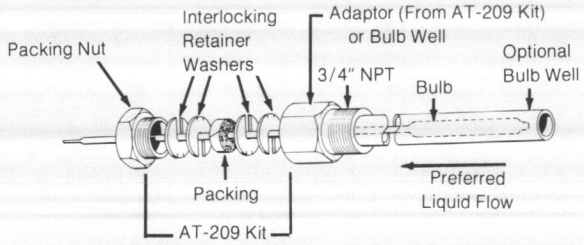

Figure 5. AT-201 or AT-203 Installation

Install bulb well or adaptor from AT-209 into 3/4" FNPT opening. Place packing nut, washers, and packing from AT-209 over bulb support section and insert bulb into well or AT-209 adaptor. Push interlocking washers and packing into well or adaptor and tighten packing nut until firmly seated.

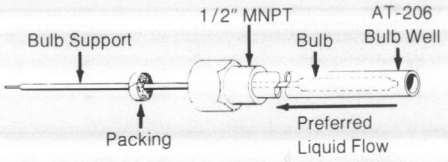

Figure 5A. AT-206 Installation

Install AT-206 bulb well into 1/2" FNPT opening. Place packing (included with AT-206) over bulb support section and insert bulb into well. Push packing into nut on well using a screwdriver.

Concealed Setpoint and Lock Cover Screw

Order AT-210 Concealed Adjustment Kit separately.

1. Peel off adhesive film from the concealed adjustment plate and place into the recess of cover.
2. Remove screw from cover.
3. Install lock cover screw provided with AT-210.

Wiring

The thermostat has one 1/2-inch to 3/4-inch conduit opening in bottom of housing. Make all electrical connections in accordance with the job wiring diagram and in compliance with national and local electrical codes. Terminal coding and switch action is shown in Figure 6, and Figure 7 shows two stage switching sequence.

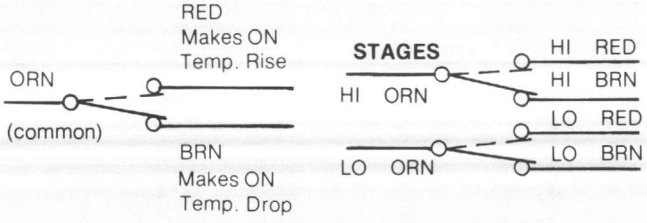

Figure 6. Terminal Coding and Switch Action

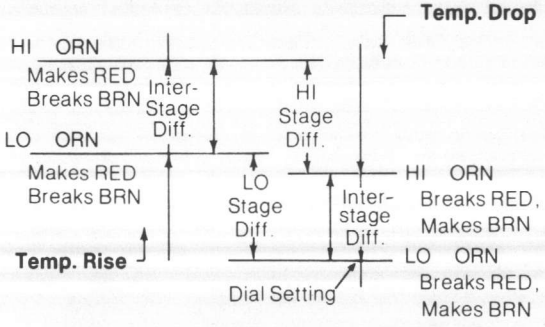

Figure 7. Two Stage Switch Sequence

Typical Applications

Figure 8 shows a typical heating or cooling application for single stage units. Figure 9 shows typical heating and cooling applications for two stage units.

SEE INSIDE PAGE

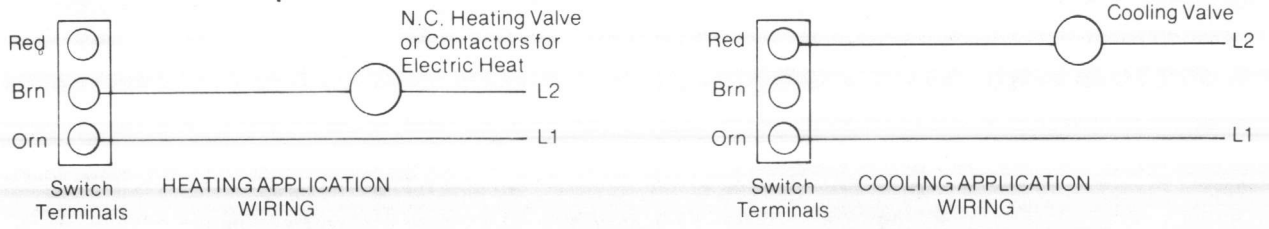

Figure 8. Typical Heating or Cooling Application for Single-Stage Units

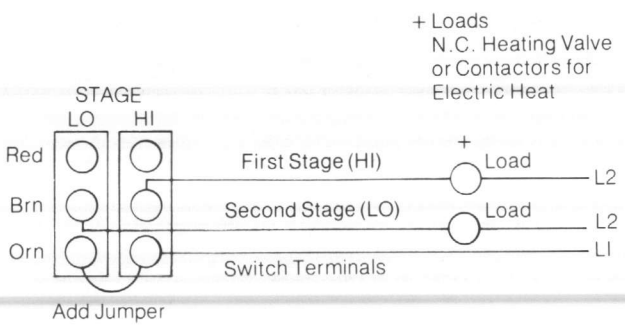

TYPICAL HEATING APPLICATION WIRING FOR TWO-STAGE UNITS

NOTE: Some compressor unloaders must be de-energized to increase cooling capacity. Connect these to the hi stage brown contact instead of the red contact.

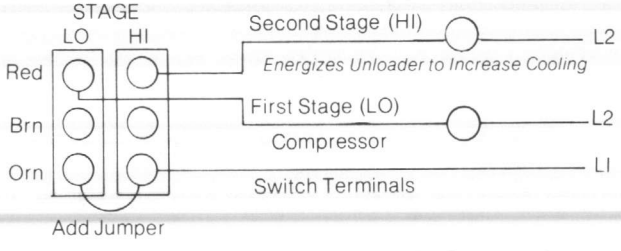

Two Compressor Packages May Be Sequenced With The Wiring Shown

TYPICAL COOLING APPLICATION WIRING FOR TWO-STAGE UNITS

Figure 9

VALVES PNEUMATIC — 2-WAY & 3-WAY, BUTTERFLY

WHERE APPLICABLE ? S.L.

TO SELECT A VALVE BODY & PORT CODE

APPLICATION		Chilled or Hot Water: 30 psig Steam		Chilled or Hot Water	
FITTING		Flangeless Wafer — Flange (125/150 ASA)		Flangeless Wafer**	
		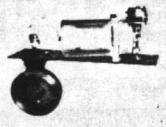			
Size		2" - 24"	2" - 12"	2" - 24"	2" - 12"
Part Number		VB-606-0-2-P	VB-616-0-2-P	VB-666-0-2-P	VB-676-0-2-P
Flow Type		Equal %	Equal %	Mixing or Diverting	Mixing or Diverting
Material	Body	Iron	Iron	Iron	Iron
	Seat	2% Leakage	Replaceable EPT rubber liner	2% Leakage	Replaceable EPT rubber liner
	Stem	Stn. Steel	Stn. Steel	Stn. Steel	Stn. Steel
	Packing	Teflon Impregnated Asbestos	"O" Ring	Teflon Impregnated Asbestos	"O" Ring
	Disc	Iron	Nickel plated ductile iron	Iron	Nickel plated ductile iron
STEAM					
Pressure (psig)	Static	150	150	—	—
	Inlet	35	30	—	—
	Recommended Differential	See close-off pressure rating tables on following page			
Fluid Temperature °F (°C)	Maximum	281° (138°)	275° (135°)	—	—
WATER					
Pressure (psig)	Static	150	150	125	125
	Recommended Differential	See close-off pressure rating tables on following page			
Fluid Temperature °F (°C)	Minimum	40° (4°)	40° (4°)	40° (4°)	40° (4°)
	Maximum	350° (177°)	275° (135°)	350° (177°)	275° (135°)
P Code	Valve Size	C_V*			
-11	2"	75	45	75	45
-12	2-1/2"	115	70	115	70
-13	3"	170	100	170	100
-14	4"	275	200	275	200
-15	5"	440	425	440	425
-16	6"	640	680	640	680
-17	8"	1150	1125	1150	1125
-18	10"	1850	1750	1850	1750
-19	12"	2650	2600	2650	2600
-20	14"	3400		3400	
-21	16"	4500		4500	
-22	18"	5400		5400	
-23	20"	7000		7000	
-24	24"	10,000		10,000	

*Based on 60° opening for optimum control characteristics.
**2 flangeless wafers with 125 lb./150 lb. ASA flanges mounted on 125 lb. cast iron tee.
See dimensional drawings.

VALVES PNEUMATIC — 2-WAY & 3-WAY, BUTTERFLY CLOSE-OFF PRESSURE RATINGS AND ASSEMBLIES

TO SELECT AN ACTUATOR SERIES & COMPLETE VALVE ASSEMBLY

			ACTUATORS			
			MK4-7121		DUAL MK4-7121	
Part Number	P Code	Size	Close Off 0° ††	Max. Rec. Diff. Pressure Full Open (60°)	Close Off 0° ††	Max Rec. Diff. Pressure Full Open (60°)
VB-606-0-2-P	-11	2"	150	4.4 †		
	-12	2-1/2"	150	3.8 †		
	-13	3"	150	4.1 †		
	-14	4"	125	4.7 †		
	-15	5"	100	4.5 †		
	-16	6"	80	4.5 †		
	-17	8"	73	4.1 †	90	4.1 †
	-18	10"	32	2.8	64	4.0 †
	-19	12"	24	1.8	47	3.5 †
	-20	14"	15	1.3	30	2.5
	-21	16"	12	.8	24.3	1.7
	-22	18"			15.6	1.1
	-23	20			12.1	.85
	-24	24"			7.3	.5
VB-616-0-2-P	-11	2"	50*	12.2 †		
	-12	2-1/2"	50*	10.3 †		
	-13	3"	50*	12.0 †		
	-14	4"	50*	8.85 †		
	-15	5"	50*	4.8 †	50*	4.8 †
	-16	6"			50*	3.9 †
	-17	8"			50*	4.3 †
	-18	10"			20*	2.0
	-19	12"			20*	.5
VB-666-0-2-P	-11	2"		4.4 †		
	-12	2-1/2"		3.8 †		
	-13	3"		4.1 †		
	-14	4"		4.7 †		
	-15	5"		4.5 †		
	-16	6"		4.5 †		
	-17	8"		4.1 †		4.1 †
	-18	10"		2.5		4.0 †
	-19	18"		1.6		3.2
	-20	14"		1.1		2.2
	-21	16"		.7		1.5
	-22	18"				1.0
	-23	20"				.8
	-24	24"				.4
VB-676-0-2-P	-11	2"	*	12.2 †		
	-12	2-1/2"	*	10.3 †		
	-13	3"	*	12 †		
	-14	4"	*	8.85 †		
	-15	5"	*	4.8 †	*	4.8 †
	-16	6"			*	3.9 †
	-17	8"			*	2.1
	-18	10"			*	.4
	-19	18"			*	.2
Body, Linkage & Actuator (Factory Assembled)			VK-6064-221-2-P		VK-6064-321-2-P	
			VK-6164-221-2-P		VK-6164-321-2-P	
			VK-6664-221-2-P		VK-6664-321-2-P	
			VK-6764-221-2-P		VK-6764-321-2-P	

Note: Ratings based on 20 PSI supply air pressure

*Bubble tight

† Based on 15 ft./sec. fluid velocity. Contact factory concerning higher rating

†† For steam applications close-off ratings are 35 PSI maximum unless listed close-off is lower

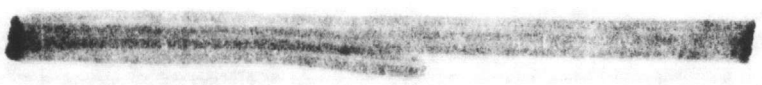

TC-1 HW RESET CONTROLLER.

BARBER COLMAN COMPANY

General Instructions

S.C.

Solid State Bridge and Controller CN-8101, CP-8102

Multi-Purpose Bridge 2 - Input Controllers

General Information: The two input controller, Figure 1, is a self-contained package incorporating an integrated circuit amplifier and associated solid state discrete components with two bridges labeled A and B. The controller is designed to be track mounted in a local control panel, requiring only the connection of two wires from the sensing element and three wires from the controlled device to place the system into operation. The controller input terminals allow the connection of 1000 ohm sensors directly to bridges A and/or B, as well as connection of sensors through an auxiliary bridge (such as the multi-purpose bridge, Figure 2) to meet any application need. The design is such that a 1-15 volt DC drive type output with a low impedance is available to operate several controlled devices from one controller.

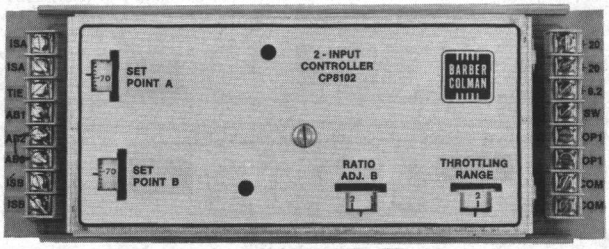

Figure 1

Figure 2

The multi-purpose bridge is designed to be used in applications of a complex nature meeting specific cycles of operation. It is used when the cycle calls for the application of lagged or solar type sensing elements or for cycles requiring three element control. This module is also designed to be mounted in a track located in a local control panel and obtains its power supply voltage from the two input controller. It produces a variable DC output which is supplied to the auxiliary bridge connections of the two-input controller, thus permitting specific cycles of operation to be met.

Installation Information: The multi-purpose bridge module, CN 8101, is designed to be track mounted and located in a local control panel. The unit is provided with a 7-1/2" piece of mounting track to permit quick and easy panel mounting, in a horizontal or vertical position. A 1000 ohm resistor is supplied with each unit.

The two-input controller module, CP 8102, is designed to be track mounted and located in a local control panel. The unit is provided with an 11" piece of mounting track to permit quick and easy panel mounting, in a horizontal or vertical position.

The location of these modules should be such that the unit is not subjected to severe vibration, shock, or ambient temperature limitations.

Make all connections in accordance with job wiring diagrams, Figure 5 and 6, complying with all national electric codes. Wiring terminations are made on screw terminals located on the end of the printed circuit board.

Construction: The CN 8101 and CP 8102 modules are designed primarily for track mounting in a local or central control panel. However, the CN 8101 may be located inside the AD 8910 enclosure for remote field mounted installations. The CP 8102 can be located inside the AD 8912 enclosure for remote field mounted installations.

Adjustments: Multi-purpose bridge, Figure 3 has adjustments for calibration of the sensing element to the bridge and a ratio adjust potentiometer. The ratio adjust potentiometer is available for setting ratios of .5 to 20:1 with respect to the main element of the two input controller. For example, if a 1:1 ratio is required in the system, the ratio adjustment potentiometer would be set at 1.

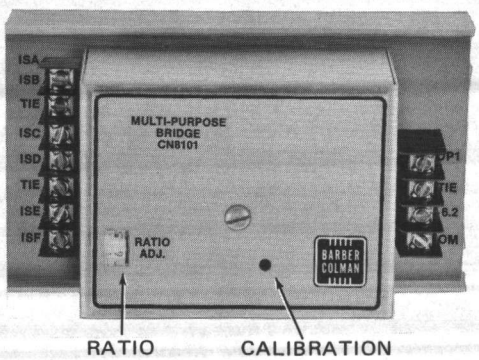

Figure 3

Two input controller, Figure 4 has adjustments available to permit calibration and selection of the proper ratio and throttling range to meet specific applications. With the sensing element connected to bridge A, the control point is adjustable from 20-120°F. by merely rotating the setpoint knob to the desired temperature. Should it be necessary to match the element to a given output voltage, a calibration adjustment potentiometer is also available. When a sensing element is connected to bridge B, calibration and setpoint adjustments are also available. The setpoint is adjustable from 20-120°F. with 1° adjustability. Also contained in bridge B is a ratio adjustment which can be set from .5 to 25:1. This means with the ratio adjustment set at 1, elements A and B have identical authority.

A throttling range potentiometer is available for setting the throttling range of the system from 2-10°F. (measured when the output voltage varies from 6-9 volts DC).

Calibration:

1. Apply +20 volts DC to terminals +20 (+) and common (-).
2. Connect VOM (10,000Ω per volt) to OP1 (+) and common (-).
3. Set throttling range potentiometer to 3 and ratio potentiometer to 1. Remove jumper AB2 and AB3.
4. Measure the temperature of element A and set setpoint potentiometer A to this temperature.
5. Calibrate bridge A to 7.5 volts output.
6. Replace jumper AB2 to AB3.
7. Measure temperature of element B and set setpoint adjustment B to match this temperature.
8. Calibrate bridge B to 7.5 volts output.
9. Remove the meter.
10. Place the throttling range and ratio potentiometers to desired setting for your application.

Note: A 1000Ω, 1% resistor may be substituted in place of the element. The setpoint potentiometer should be set at 70°F., and steps 3, 5, 6, 8, 9, and 10 should be followed.

Service:

1. Check wiring per job wiring diagram.
2. Measure with VOM
   A. Power supply 20 VDC terminals +20 and COM.
   B. Output 1-15 VDC terminals OP1 and COM.
   C. Input 1SA and 1SB 1000Ω sensing element.
3. Consult EN 111 for additional service information.

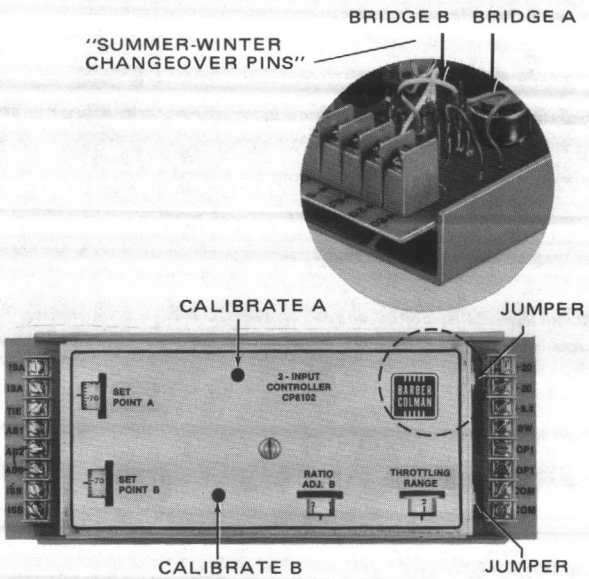

Figure 4

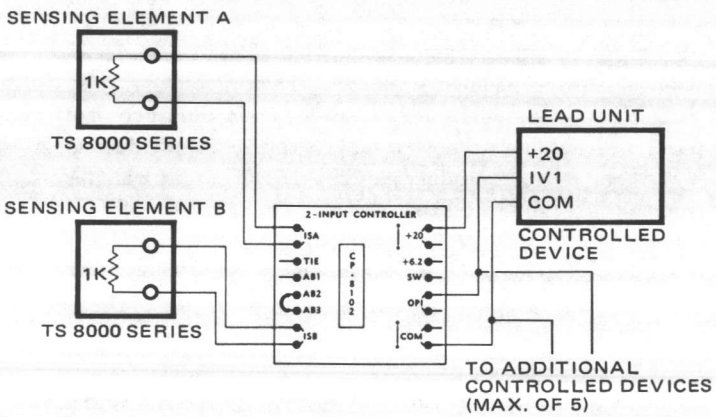

Figure 5

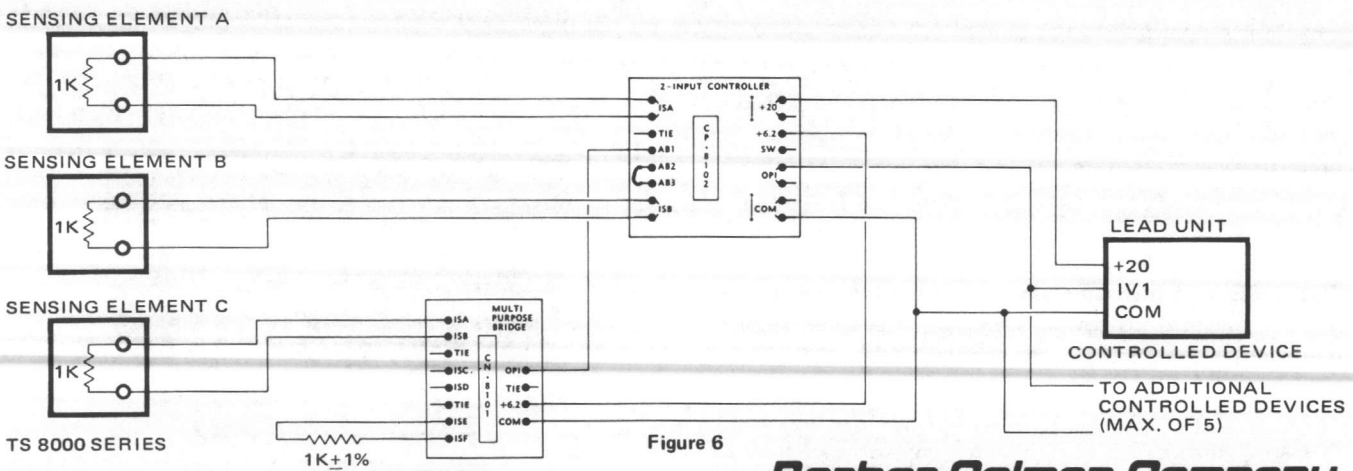

Figure 6

Barber-Colman Company
ENVIRONMENTAL CONTROLS DIVISION
1354 Clifford Avenue
P.O. Box 2940
Loves Park, IL U.S.A. 61132-2940

LITHO IN U.S.A. 6/76

EMCS EACH BLDG.

BARBER COLMAN COMPANY

Product Information

Differential Pressure Switch PC-301

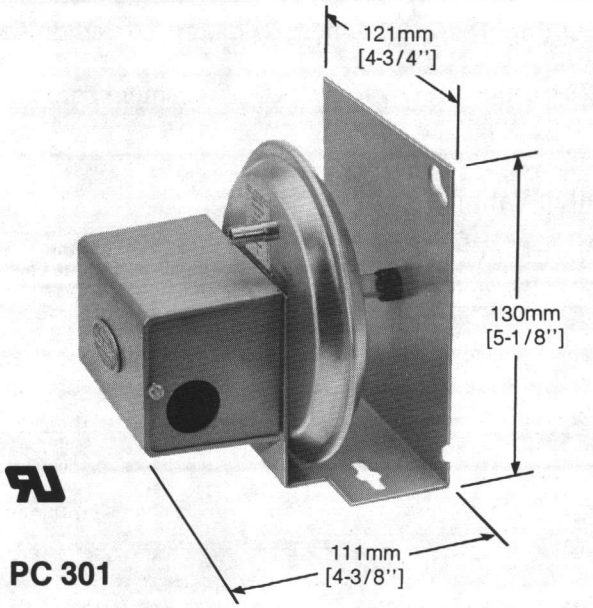

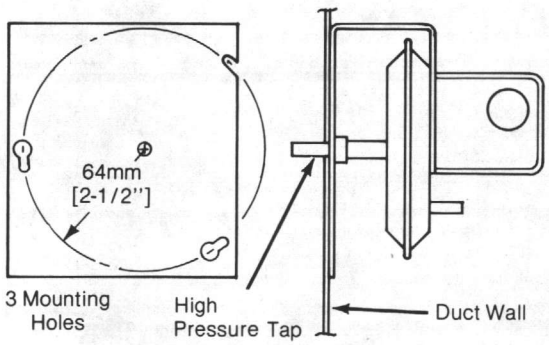

Figure 1. Direct Mounting of Probe

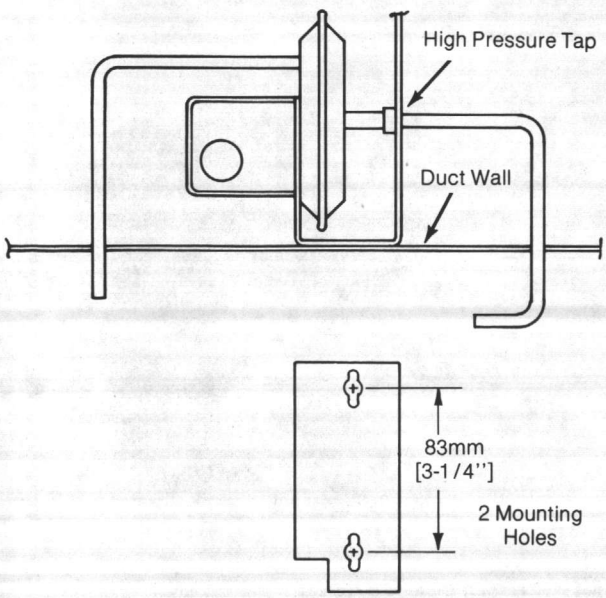

Figure 2. Remote Mounting of Probes

For use with air and non-combustible gases only. For sensing static pressure (pressure that acts equally in all directions), velocity pressure (pressure of moving air in its direction of motion due to its weight and inertia), total pressure (sum of static and velocity), differential static pressure, or differential total pressure. **Device:** Rugged metal housing incorporating a sensitive diaphragm. A 1/2 inch conduit opening is provided in the wiring compartment. Probes should be constructed from 1/4 inch O.D. copper, brass, or aluminum tubing. The ends of the probes should be cut square to the sides of the tube and deburred. Total pressure probe must have the sensing end bent at 90° approximately 25mm to 76mm, (1 to 3 inches) from the tip. **Input:** Field adjustable 1.25mm ± .5mm to 25mm W.C. (Water Column) (.05 inches ± .02 inches to 1.0 inch W.C.). **Output:** SPDT snap acting switch has screw terminals common makes normally open contact above setpoint.

INSTALLATION

CAUTION

For use with air or non-combustible gases only.

1. Select direct or remote mounting. See Figures 1 and 2.

2. Select appropriate probes from Table 1 and 2.

3. Install probe. See Figure 3. Sampling probes should be located in areas of minimum air turbulance (6 to 8 duct diameters downstream from fan outlet, elbows, tees, or dampers). If this is not possible locate the probe tip as close to the center of the duct as possible.

4. Mount the PC-301. Note: The diaphragm must be mounted in a vertical plane and in a location free from vibration.

5. Connect the remote probe(s) if any to PC-301.

6. Make all connections in accordance with job wiring diagrams and in compliance with national and local codes. On an increase of air pressure to above setpoint, common contact of switch is made to normally open contact. On a decrease of air pressure to below setpoint, common contact of switch is made to normally closed contact.

Adjustment: to increase setpoint, turn adjustment screw clockwise. Adjustable 1.25mm ±.5mm to 25mm W.C. (.05 inch ±.02 inch to 1.0 inch W.C.). To decrease setpoint, turn adjustment screw counterclockwise. Note: Units are shipped at minimum setpoint.

If readjustment to minimum setpoint is required, proceed as follows without any air pressure applied to diaphragm.

1. Turn adjustment screw full ccw.
2. Push on spring at point A (figure 5) and maintain pressure during steps 3 and 4.
3. Turn adjustment screw cw till common contact is made to normally open contact.
4. Turn adjustment screw ccw till common is made to normally closed contact. Then turn adjustment screw 1/8 turn more ccw.

Table 1. Direct Mount of One Probe

	Static	Velocity	Total	Δ Static	Δ Total
High Press. Tap*	Probe 1	Probe 2	Probe 2	Probe 1	Probe 2
Low Press. Tap	—	Probe 3 Remote	—	Probe 3 Remote	Probe 4 Remote

Table 2. Remote Mounting of Probe(s)

	Static	Velocity†	Total	Δ Static	Δ Total
High Press. Tap*	Probe 3	Probe 4	Probe 4	Probe 3	Probe 4
Low Press. Tap	—	Probe 3	—	Probe 3	Probe 4

*Highest (absolute) pressure should be applied to high pressure tap.
†Pitot can be used instead of two probes.
Δ = Differential.

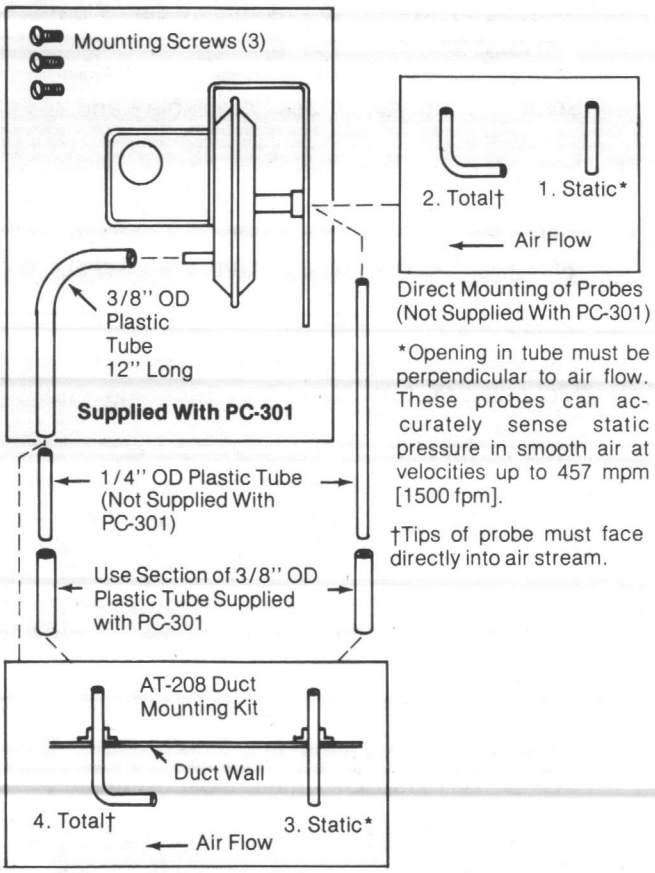

Direct Mounting of Probes (Not Supplied With PC-301)

*Opening in tube must be perpendicular to air flow. These probes can accurately sense static pressure in smooth air at velocities up to 457 mpm [1500 fpm].

†Tips of probe must face directly into air stream.

Remote Mounting of Probes. Use AT-208 to Mount Probe to Duct.

(Above Items Not Supplied Order AT-208 Separately)

Figure 3.

PERFORMANCE

Maximum Safe Pressure: 305mm [12"] W.C.
Ambient Temperature Range: [32° to 140°F] 0° to 60°C
Mounting: Diaphragm must be mounted in a vertical plane.
Differential: 1mm [.04"] W.C. at minimum setpoint, 3mm [.1"] W.C. at maximum setpoint.

Switch Rating:

	Full Load Amps	Locked Rotor Amps	Pilot Duty (VA)	Non-Inductive Amps
24V	2.9	17.4	60	10
120V	2.9	17.4	300	10
240V	2.9	17.4	300	10
277V	—	—	300	10

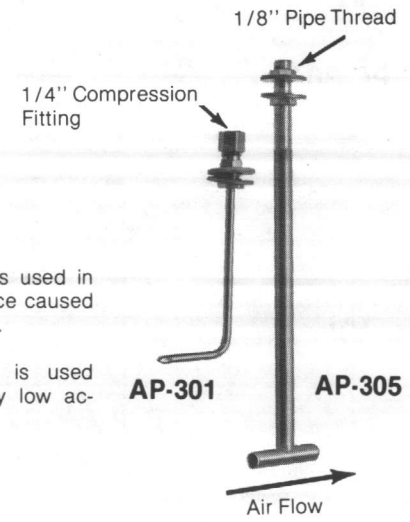

AP-301, static probe is used in areas with air turbulence caused by filters, dampers, etc.

AP-305, static probe is used where there is a very low actuating pressure.

Figure 4. Optional Probes

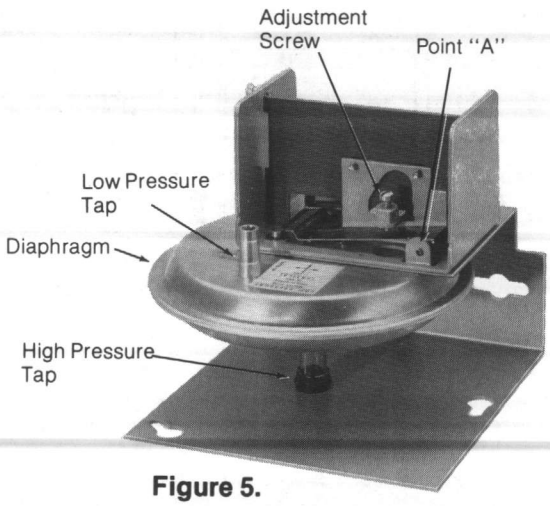

Figure 5.

Barber-Colman Company
CONTROLS DIVISION
1300 Rock Street, Rockford, Illinois, U.S.A., 61101

SS-H
SS-L

General Instructions

AD 8101
AD 8201

SOLID STATE ADAPTORS
Seq./Par./Rev. Module
Hi-Lo Selector Module

General Information: Specific adaptor modules are designed to meet system applications such as sequencing/paralleling/reversing, and high-low signal selection. By placing these modules between the controller and the controlled device, complex cycles of operation can be accomplished. The design of the module centers around the use of integrated circuits and discrete type components arranged on printed circuit boards and snapped into vinyl track for mounting in a local control panel.

The high-low signal selector module, Figure 1, is designed to accomplish either high or low signal selection, depending on the pin arrangement underneath the cover, Figure 3. The device is calibrated at the factory and requires no field calibration. It has the capability of selecting either the highest or lowest signal from up to six zones. The output signal then responds to either the highest or lowest zone thermostat, depending on the application.

The sequencing/paralleling/reversing module, Figure 2, is a device which conditions the signal supplied by the controller and provides sequencing, reversing, or parallel operation to the controlled device. In the sequencing mode, the output is adjustable above or below the output voltage of the controller, permitting sequencing of two controlled devices. In the reversing mode, the output of the module is reversed with respect to the input, i.e., a 1-15 volt input provides a 15-1 volt output. In the paralleling mode, several controlled devices can be operated in parallel from the signal produced by the sequencing/paralleling/reversing module.

Installation Information: The module is designed to be track mounted and located in a local control panel. The unit is provided with a 7-1/2" piece of mounting track to permit quick and easy panel mounting, in a horizontal or vertical position. Location should be such that the unit is not subjected to severe vibration, shock, or ambient temperature conditions.

Make all connections in accordance with job wiring diagrams, complying with all national electrical codes. Wiring terminations are made at screw terminals located on the end of the printed circuit board, Figures 4 and 6.

Figure 1

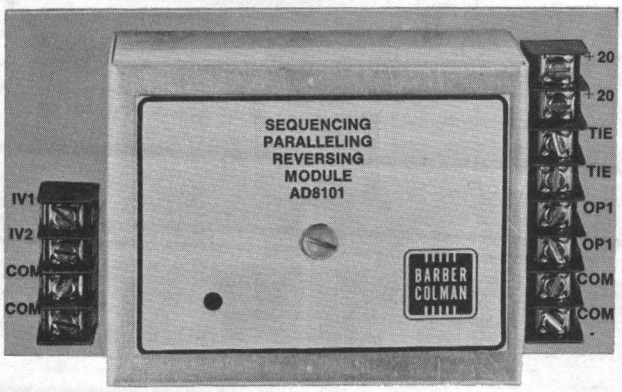

Figure 2

Ambient Temperature Limits:
Minimum – +40°F
Maximum – +135°F

Construction: The AD 8101, and 8201 adaptor modules are designed primarily for track mounting in a local or central control panel. However, they can also be located inside the AD 8910 enclosure for remote field mounted installations.

Adjustments: High-low selector module – this module is factory calibrated to provide a 1:1 ratio so that with a 6-9 volt input a 6-9 volt output is obtained. An adjustment is available so that the output of the high-low selector module can be changed ± 4 volts DC with respect to the input signal, Figure 3.

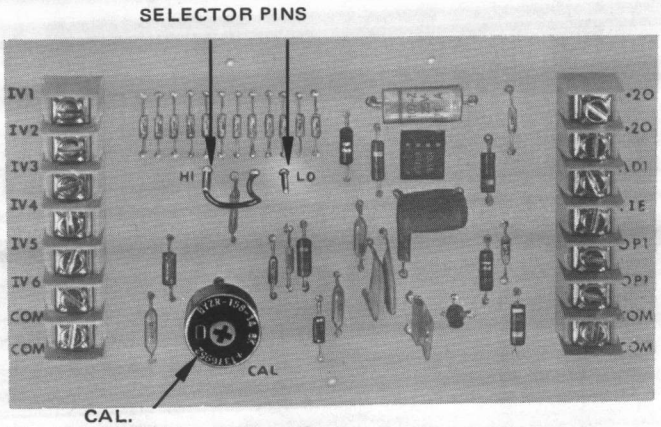

Figure 3

Service:

1. Check wiring per job wiring diagram.
2. Measure with VOM:
   A. Power supply 20 VDC, terminals +20 and COM.
   B. Output 1-1 VDC terminals OP1 and COM.
   C. Input 1-15 VDC terminals IV1 through IV6 and COM.
3. Consult EN 111 for additional service information.

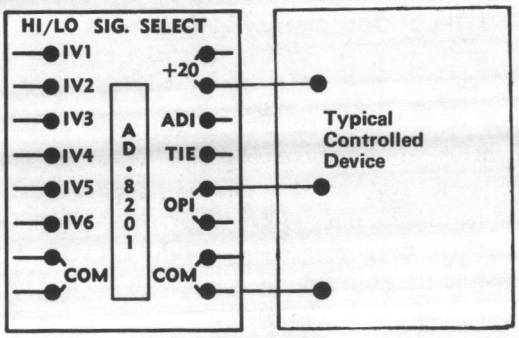

Figure 4

Adjustments: Sequencing/paralleling/reversing module is calibrated at the factory to provide a 1:1 ratio so that with a 6-9 volt input, a 6-9 volt output can be obtained. The sequencing/paralleling/reversing module has an adjustment so that the output signal may be changed ± 5 volts with respect to the input signal, Figure 5.

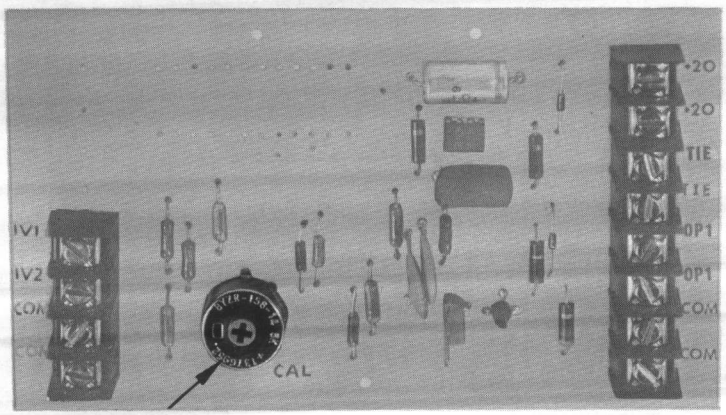

Figure 5

Service:

1. Check wiring per job wiring diagram.
2. Measure with VOM:
   A. Power supply 20 VDC terminals +20 and COM.
   B. Output 1-15 VDC terminals OP1 and COM.
   C. Input 1-15 VDC terminals, IV1, IV2 and COM.
3. Consult EN 111 for additional service information.

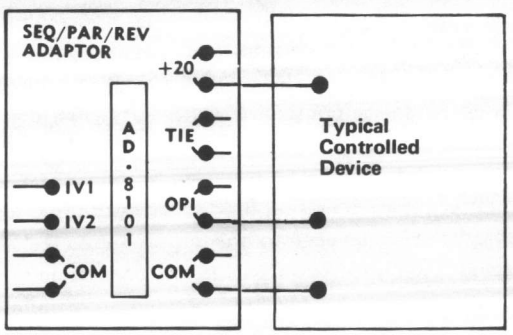

Figure 6

Barber-Colman Company
ENVIRONMENTAL CONTROLS DIVISION
1300 Rock Street, Rockford, Illinois, U.S.A., 61101

LITHO IN U.S.A.

ROOM THERMOSTATS, TWO-POSITION, HEATING AND/OR COOLING

TC-1101
TC-1102
TC-1103
TC-1104
TC-1105

For low or line voltage on-off control of fan coils, fans, motor starters, contactors, two-position electric actuators.

Bimetal operated snap action SPDT switch. Color coded 6" leads. Differential 2°F. Units have plastic covers as standard. Mounts on flush or surface switch box or directly to wall (24 volt only). **Dimensions:** 4-3/8" high × 2-7/8" wide × 1-5/8" deep.

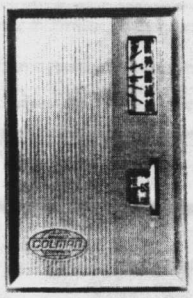

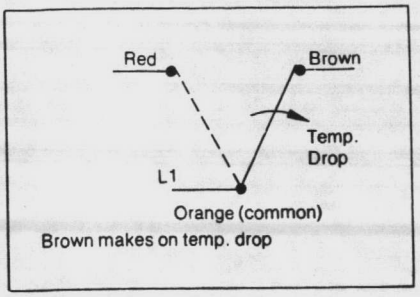

OPTIONS: Add "dash-number" (-XXX) suffix to base part number for desired option. For metal covers, specify TC2-110X-XXX. All configurations are UL listed.

†Only models with metal covers are CSA certified.

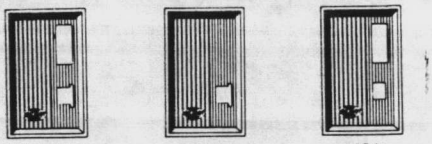

-500 parallel heat anticipation 24V standard cover
-501 parallel heat anticipation 120V standard cover
-502 parallel heat anticipation 240V standard cover

-601 10°F night depression 120V standard cover
-602 10°F night depression 24V standard cover
-603 10°F night depression 240V standard cover

ACCESSORIES:

AT-101	Lock cover kit
AT-104	Dial stop pins (note: pins included with each unit)
AT-136	Title plates (day, night, heat, cool)
AT-504	Plaster hole cover kit (small)
AT-505	Surface mounting base
AT-546	Auxiliary mounting plate
AT-602	Selector switch sub-base DP4T
AT-603	Selector switch sub-base one DP4T, one DPDT
AT-1103	Wire guard
AT-1104	Cast aluminum guard
AT-1105	Plastic guard
AT-1155	Plastic guard
AT-1165	Plastic guard
Tool #11	Calibration wrench
Tool #13	Contact burnishing tool

Part Number	Control Dial* Range	Full Load Amps		Locked Rotor Amps		Pilot Duty (VA)
		24/120 Vac	240 Vac	24/120 Vac	240 Vac	
TC-1101	55-85°F (13-29°C)	4.4 orange to brown lead	2.2 orange to brown lead	26.4 orange to brown lead	13.2 orange to brown lead	40 @ 24 Vac
TC-1102	45-75°F (7-23°C)					
TC-1103	75-105°F (24-40°C)	3.0 orange to red lead	1.5 orange to red lead	18 orange to red lead	9 orange to red lead	210 @ 120/240 Vac
TC-1104	35-65°F (2-18°C)					
TC-1105	90-120°F (32-49°C)					

*Units marked in both °F and °C; dial stop pins included to limit dial range.

T-5 FOR TAB'S

BARBER COLMAN COMPANY

General Instructions

TK-1700
Day/Night & Heating/Cooling Pneumatic Dual Setpoint Room Thermostats

Meets National, State and Local Energy Conservation Standards

For proportional temperature control of pneumatic actuated valves and damper actuators to maintain room air temperatures in heating, ventilating and air conditioning systems.

W/ METAL COVER

CONSTRUCTION

Two-tube proportional control type of pneumatic instrument, using bimetal sensing. The small sensitive bimetal actuates a piloted non-bleed relay. Delicate balance and linear output are accomplished by an internal pneumatic feedback circuit. Connection to fittings is made by connecting plug-in plastic tubing which is attached to the base of the thermostat.

Throttling Range: Continuously adjustable from 2 to 10°F for a 10 psi change in control branch line pressure, nominally 3 to 13 psi. Normal factory setting 4°F. Independently adjustable for each setpoint dial.

Supply Air Pressure: See SPECIFICATION TABLE. Requires 15 and 22 psig dual pressure supply main.

Maximum Safe Air Pressure: 30 psig.

Ambient Limits: 20 to 115°F working; -40 to 150°F shipping.

Dial Markings: °F standard; dials field-reversible for °C.

Air Connections: 5/32 plastic tubing.

External Setpoint Knobs: AT-37 kit included in standard and TK-17XX-400 models.

Internal Thermometer: Included in TK-17XX-400 and -404 models.

S.L.

OPTIONS

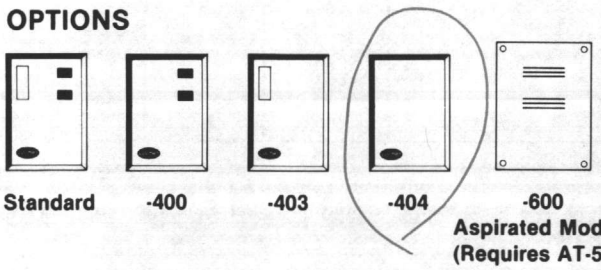

Standard **-400** **-403** **-404** **-600 Aspirated Models (Requires AT-509)**

Part Numbers	Air Consumption for Sizing Air Compressor	Air Capacity for Sizing Air Mains
All except Aspirated	.008 scfm	96 scim
Aspirated	.024 scfm	136 scim

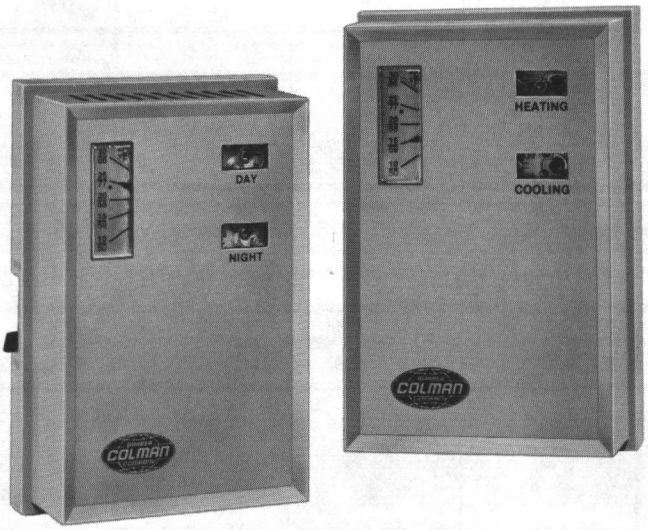

ACCESSORIES

AT-37	Setpoint knob kit (included with standard and TK-17XX-400 models)
AT-504	Plaster hole cover
AT-505	Surface mounting base
AT-506	Pneumatic wall box fitting
AT-509	Wall box required for aspirated thermostats
AT-536	Pneumatic wall thermostat conversion kit
AT-546	Auxiliary mounting base
AT-1103	Wire guard
AT-1104	Cast aluminum guard
AT-1105	Plastic guard
AT-1155	Plastic guard
AT-1165	Plastic guard
AT-533-101	Adapter 1/4" plastic to 5/32" plastic
AT-533-127	Adapter 3/16" copper or 1/4" copper with 1/4" solder coupling (not included) to 5/32" plastic

Typical Piping

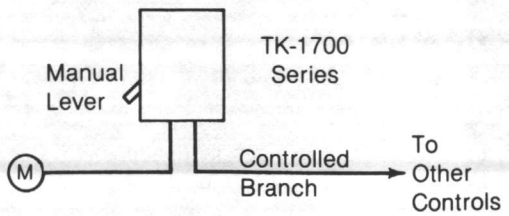

Figure 1.

SPECIFICATION TABLE

Application	Controlled Device Action	15 Psig Supply Pressure			22 Psig Supply Pressure			Part Number
		Control Dial Range†	Control Action*	Cover Legend	Control Dial Range†	Control Action*	Cover Legend	
HEATING AND COOLING	N.O. Heating N.C. Cooling	55-85°F (13-29°C)	D.A.	HEAT	55-85°F (13-29°C)	D.A.	COOL	TK-1717
	N.C. Heating N.O. Cooling		R.A.			R.A.		TK-1727
	N.C. Heating N.C. Cooling		R.A.			D.A.		TK-1731
	N.O. Heating N.O. Cooling		D.A.			R.A.		TK-1741
	N.C. Heating N.C. Cooling	45-75°F (7-24°C)	R.A.		75-105°F (24-41°C)	D.A.		TK-1735
	N.O. Heating N.O. Cooling		D.A.			R.A.		TK-1745
	N.C. Heating N.C. Cooling	75-105°F (24-41°C)	R.A.	COOL	45-75°F (7-24°C)	D.A.	HEAT	TK-1736
	N.O. Heating N.O. Cooling		D.A.			R.A.		TK-1746
HEATING WITH DAY/NIGHT	NORMALLY OPEN	55-85°F (13-29°C)	D.A.	DAY	55-85°F (13-29°C)	D.A.	NIGHT	TK-1711
								TK-1751**
		45-75°F (7-24°C)			45-75°F (7-24°C)			TK-1712
								TK-1752**
	NORMALLY CLOSED	55-85°F (13-29°C)	R.A.		55-85°F (13-29°C)	R.A.		TK-1721
								TK-1761**
		45-75°F (7-24°C)			45-75°F (7-24°C)			TK-1722
								TK-1762**
COOLING WITH DAY/NIGHT	NORMALLY OPEN	55-85°F (13-29°C)	R.A.	DAY	55-85°F (13-29°C)	R.A.	NIGHT	TK-1721
								TK-1761**
		75-105°F (24-41°C)			75-105°F (24-41°C)			TK-1723
								TK-1763**
	NORMALLY CLOSED	55-85°F (13-29°C)	D.A.		55-85°F (13-29°C)	D.A.		TK-1711
								TK-1751**
		75-105°F (24-41°C)			75-105°F (24-41°C)			TK-1713
								TK-1753**

* Direct Acting (D.A.): Increase Output Pressure on Temperature Rise
Reverse Acting (R.A.): Decrease Output Pressure on Temperature Rise

†°F Standard, Field Reversible to °C

**Units include a manual override lever for overriding 22 psig operation and placing control into 15 psig control mode when unit is supplied with 22 psig. Lever automatically resets when supply pressure is reduced to 15 psig.

PRE-INSTALLATION

The thermostats are shipped with mounting screws. Wall fittings must be ordered separately.

Before installation, make a visual inspection of the thermostat carton for obvious signs of damage.

Air Connections: Two plastic tubes reinforced with a coil spring are coded M and B. The M (black) designates the supply main and the B (white) designates the controlled branch line. See Figure 1.

INSTALLATION

Requirements

Locate the thermostat where it will be exposed to unrestricted circulation of air which represents the average temperature of the controlled space. Do not locate the thermostat near sources of heat or cold, such as lamps, motors, sunlight or concealed ducts or pipes.

The thermostat fitting is available for either flush or surface mounting. See Figures 2 and 3. Use the AT-506 wall box fitting for surface mounting on all wall surfaces and flush mounting on plastered or stud walls.

NOTE: The amount of rise or drop in the output pressure may vary depending on the ambient temperature in the test area. If output is always 0 psig, the restriction may be plugged. If output is always equal to supply or unable to decrease below 3 psig, the nozzle may be plugged.

2. To check for active thermal element, adjust the setpoint knob to obtain approximately 8 psig branch output. Slightly warm the element with your hand or breath. A direct-acting thermostat will increase output pressure. A reverse-acting thermostat will decrease output pressure. If the thermostat fails to function properly, refer to **Repair**.

ADJUSTMENTS

NOTE: An AL-95 or AL-341 calibration kit should be available for calibration.

Throttling Ranges: The throttling ranges are set at 4°F per 10 psi control pressure change. They should be set at the lowest value which will allow the thermostat to control the system without cycling under the normal load conditions. The most satisfactory setting will vary with the type of system being controlled. The throttling range is independently adjustable for each bimetal.

If the throttling range of the thermostat as shipped is not satisfactory, proceed as follows:

1. Measure temperature at sensing element. This should be a stable temperature.
2. Rotate upper setpoint dial to this temperature.
3. With 15 psig supplied to thermostat, adjust calibration screw until 3 psig is read on branch test gauge.
4. Rotate the upper setpoint dial in a direction which raises the output until 13 psig is read on the branch gauge.
5. The difference between the setpoint dial readings in step 2 and 4 is the throttling range of the thermostat.
6. If the throttling range in step 5 is not that desired, move the throttling range slider (Figure 6) in the appropriate direction and repeat steps 2 through 5 until the desired throttling range is obtained.

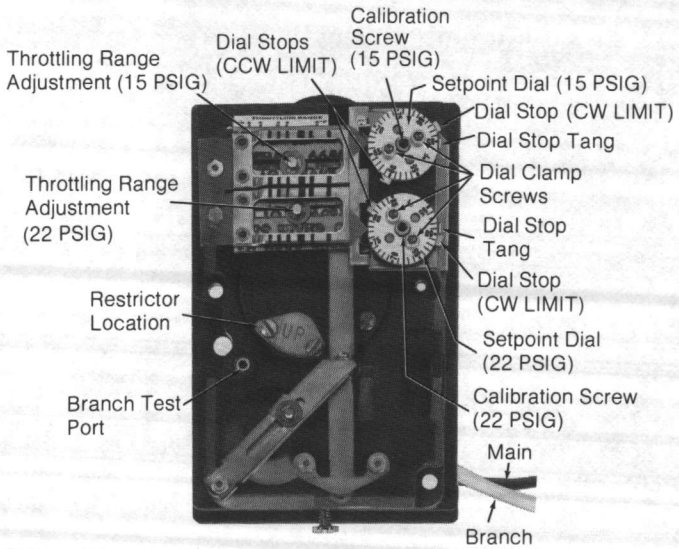

Figure 6.

7. Change supply pressure to 22 psig and repeat steps 2 through 6. On day/night applications, both throttling ranges should have the same setting.

The calibration of the thermostat should be checked after the throttling range has been changed. See **SERVICE AND REPAIR**.

Adjustment of Dial Stops: To set the setpoint dial stops, proceed as follows:

1. Using the AL-82 5/64" Allen wrench, loosen the two dial clamp screws approximately 1/2 turn.
2. Separate the two dial stop tabs if not already separated.
3. Using the AL-82 5/64" Allen wrench, turn the setpoint dial to the desired clockwise dial limit. While holding the dial with the Allen wrench, slide the one stop tab in a clockwise direction until it touches the top side of the stop tang.
4. Rotate the setpoint dial to the counterclockwise limit. While holding the dial with the 5/64" Allen, rotate the other stop tab counterclockwise to touch the bottom of the stop tang.
5. Carefully tighten the dial screws with the AL-82 5/64" Allen wrench.
6. Rotate setpoint dial from counterclockwise stop to clockwise stop to check stop settings. Repeat adjustment steps if necessary.

   NOTE: Stops can be rotated to lock setpoint dial in one place if desired.

Converting Dials to °C: To convert the unit from °F dial reading to °C dial reading, proceed as follows:

1. Rotate setpoint dial clockwise to end of dial scale.
2. While holding dial, use the AL-82 5/64" Allen wrench to remove the dial screws.
3. Carefully remove dial plate and turn over. Make sure stop tab plates and clamp ring are in place.
4. Align dial plate to read clockwise end of °C scale.
5. Carefully re-install dial screws. Do not tighten.
6. Readjust stop tabs. See "Adjustment of Dial Stops".

SERVICE AND REPAIR

Calibration: As a nominal calibration, the branch line control pressure should be 8 psig when the setpoint is equal to the room temperature indicated by an accurate thermometer. On some applications, a value other than 8 psig will be required to get the desired control results. In this case, change the 8 psig designation used in the calibration procedure.

CAUTION

The thermal element of the room thermostat is very sensitive to temperature change. Do not affect its temperature by touching the bimetal or breathing on the thermostat. When calibrating the instrument, observe the room temperature frequently and reset the setpoint dial if required.

1. Remove the thermostat cover by loosening the cover screw.
2. Using the AL-82 5/64" Allen wrench, unscrew (counterclockwise rotation) the branch test port screw one full turn (Figure 5).

3. Attach the test gauge rubber seal to the boss, as shown. Using a rotary motion, push the gauge on as far as it will go (1/4 inch minimum). The tubing will support the test gauge in a position where it will be easily read. The supply pressure to the thermostat should be 15 psig.
4. Adjust the upper setpoint dial to the room temperature as indicated on the test thermometer.
5. With the AL-82 .048-inch six spline wrench, turn the calibration screw clockwise if the controlled pressure is above 8 psig and counterclockwise if it is below 8 psig. Adjust the screw until the controlled pressure is 8 ±1 psi.

   NOTE: The hex nuts on the calibration screws are tension devices only. They should not be loosened to make an adjustment.

The 15 psig bimetal is calibrated. To calibrate the 22 psig bimetal, proceed as follows using a special tool (AL-80). Refer to Figure 6.

1. Adjust the lower setpoint dial to the room temperature as indicated on the test thermometer.
2. Insert the blade of the tool between the switchover plunger and the switchover lever shown in Figure 6. The top bimetal should be approximately 1/32" off the lever and the bottom bimetal should be in contact with the lever.
3. Adjust the lower bimetal with the AL-82 .048-inch six spline wrench. Turn the calibration screw clockwise if the controlled pressure is above 8 psig and counterclockwise if the controlled pressure is below 8 psig. Adjust the screw until the pressure is ±1 psi.
4. Manually switch the thermostat several times by removing and reinserting the AL-80 or screwdriver and observing the branch line pressure. If it varies beyond desired limits, repeat the calibration.
5. Remove the test gauge.
6. Turn the branch test port screw clockwise to tighten.
7. Replace cover.

Maintenance

The pneumatic thermostat requires no routine maintenance.

Repair

Field repair of pneumatic thermostats is not recommended. However, if the thermostat output pressure is 0 and it cannot be corrected by calibration, the restriction should be checked. Hold the restriction plate up to the light and check the .0045 hole. If the hole is blocked, the restriction plate must be replaced. The filter should be replaced at the same time. If the hole is not blocked, then the thermostat should be replaced.

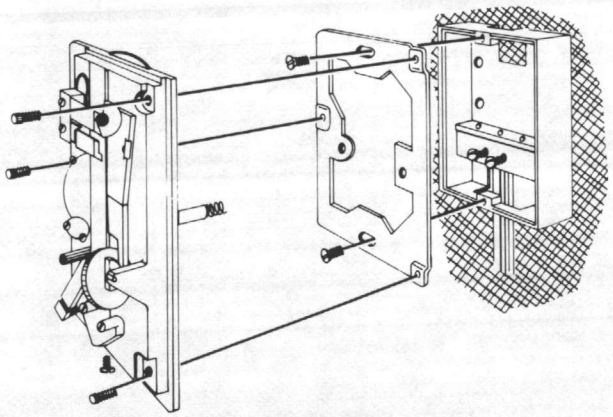

Figure 2. Mounting Thermostat to AT-506 Wall Box Fitting

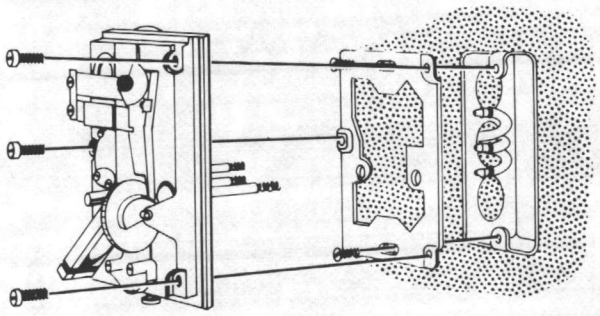

Figure 3. Mounting Thermostat to Electrical Box

Procedure

To mount a thermostat on an AT-506 wall box fitting, refer to Figure 2.

1. Remove and discard the cardboard cover plate on the wall box. (The cardboard cover protects the fitting while the wall is being plastered.)
2. Fasten the mounting plate to the wall box with the two flat head screws provided. Make sure it is square with the wall before tightening the screws.
3. If the thermostat tubing is too long for easy coiling in the wall box, it can be cut to length. Cut the tubing at a 45° angle for ease in inserting the tubing into the "O" ring seal. Be sure that the coil spring is cut flush with the tubing.
4. Remove and discard the short piece of tubing from the connector head of the wall box.
5. Insert the main (black) plastic tubing into the left-hand hole in the connector head. Insert the branch line (white) tubing into the right-hand hole in the connector.

   Insert tubes at least 1/4-inch. Do not use any lubricant on the plastic tubing.
6. Fasten the thermostat to the mounting plate with the three Allen mounting screws provided. Tighten the screws evenly.

To mount a thermostat on an electrical switch box, refer to Figure 3.

1. Attach the mounting plate to the switch box with the two flathead screws provided. Be sure the mounting plate is vertical.
2. Slightly rotate the tubes back and forth, and push firmly onto the fittings. See Figure 4.
3. Fasten the thermostat to the mounting plate with the Allen head screws provided and tighten evenly.

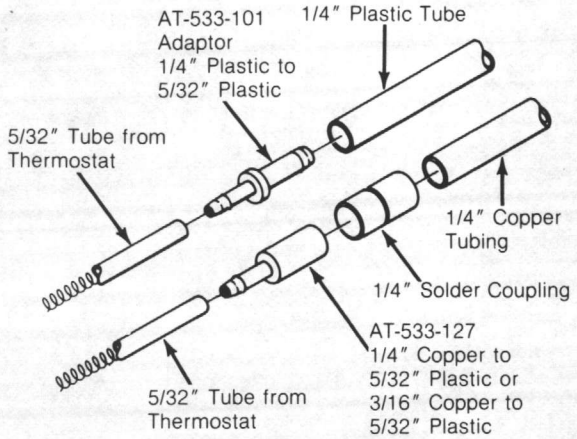

Figure 4.

Installation of external setpoint — refer to Figure 5.

1. Insert the knob through hole in cover. The knob should rest on the calibration screw with the slots aligned with the dial clamp screws.
2. Insert screw supplied with the knob into the center of the knob and tighten, being careful not to disturb the setting of the calibration screw.

   NOTE: The knob must be removed in order to remove thermostat cover or recalibrate thermostat.

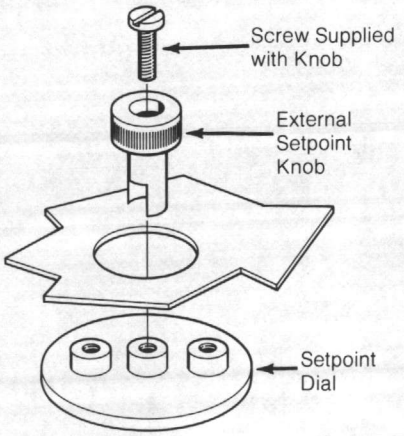

Figure 5.

CHECKOUT

After installing the thermostat, verify proper operation as follows:

1. With 15 psig supply pressure, check the nozzle and/or restriction. Turn the upper setpoint dial to maximum value. If the thermostat is direct-acting at 15 psig, the output pressure will drop. If the thermostat is reverse-acting, the output pressure will rise. Turn the setpoint dial to minimum value. If the thermostat is direct-acting, the output pressure will rise. If the thermostat is reverse-acting, the output pressure will drop.

Barber-Colman Company
ENVIRONMENTAL CONTROLS DIVISION

1354 Clifford Avenue
P.O. Box 2940
Loves Park, IL U.S.A. 61132-2940

F-18201 BK

LITHO IN U.S.A.

THL, T-11

General Instructions

TA 3432 — TA 3441
TC 3432 — TC 3441
Duct and Immersion Electric Thermostats

These thermostats are used for two position (ON-OFF) control of solenoid valves, damper and valve actuators, relays, etc.

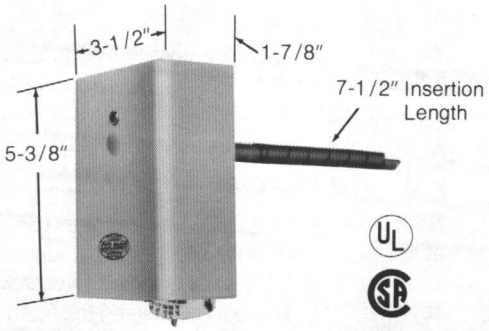

PRE-INSTALLATION

The thermostats are shipped with two mounting screws. TC-3413 and TA-3434 are shipped with bracket and three screws. Before installation, make a visual inspection of the thermostat carton for obvious signs of damage.

Part No.	Device Type	Control Dial Range†	Differential	Switch Type	Voltage	Full Load Amps	Locked Rotor Amps	Pilot Duty (VA)
T-11 CF-1 FIRESTAT TA-3432	High Limit Manual Reset	75-135°F (24-57°C)	Fixed* 5°F	SPST	120 240	16 8	96 48	720
→ AHU TA-3433	High Limit Manual Reset	100-160°F (38-71°C)	Fixed* 5°F	SPST	120 240	16 8	96 48	720
THL TA-3434	High Limit Manual Reset	120-240°F (49-116°C)	Fixed* 5°F	SPST	120 240	16 8	96 48	720
TA-3441	Low Limit Manual Reset	35-60°F (2-16°C)	Fixed** 5°F	SPST	120 240	16 8	96 48	720
TC-3411	Low Limit Automatic Reset	0-120°F (18-49°C)	2-8°F Factory Set 2°F	SPDT	120 240	3.8 1.9	22.8 11.4	125
TC-3413	High Limit Automatic Reset	120-240°F (49-116°C)	2-8°F Factory Set 2°F	SPDT	120 240	3.8 1.9	22.8 11.4	125

*Reset cannot be accomplished until the sensed temperature is at least 5°F below the setpoint.
**Reset cannot be accomplished until the sensed temperature is at least 5°F above the setpoint.
†Dial dual marked in °F and °C.

S.L.

INSTALLATION

Requirements

Mounting: The thermostats may be mounted in any position on any surface not subject to excessive vibration or extreme ambient temperatures (100°F above or below the scale range). The sensitive helical bimetal element may be mounted in ducts or, with optional bulb well, in liquid lines, pipes, tanks, etc.

Procedure

DUCT THERMOSTAT INSTALLATION:

1. Cut a 3/4-inch diameter hole in the duct where the thermostat is to be located.
2. Remove the cover and carefully insert the bimetal in the duct opening. Mark position for the two mounting screws provided and punch or drill holes.
3. Partially insert screws.
4. Insert the bimetal element, swinging the thermostat housing to the left to engage screw heads in key hole slots. Straighten thermostat housing and tighten mounting screws securely.
5. Make electrical connections and replace thermostat cover.

DUCT INSTALLATION WITH EXTENSION MOUNTING BRACKET:

1. This bracket is required by U/L on units where the control range exceeds 180°F (typically TC-3413, TA-3434).
2. Cut a 3/4-inch diameter hole in the duct where the thermostat is to be located.
3. Mount the extension bracket to the duct. Mark position for three mounting screws provided and punch or drill holes. Tighten screws.
4. Partially insert the two 8-32 × 3/8-inch round head screws provided.
5. Insert the bimetal element, swinging the thermostat housing to the left to engage screw heads in key hole slots. Straighten thermostat housing and tighten mounting screws securely.
6. Make electrical connections and replace thermostat cover.

IMMERSION THERMOSTAT INSTALLATION:

1. The optional bulb well AT-223 positions the thermostat mechanism housing 2 inches away from pipe or tank wall to allow for insulation.
2. Insert the bulb well in pipe line or tank where it will be exposed to a representative temperature of the medium being controlled. The bulb well is furnished with a mounting bushing threaded for standard 3/4-inch pipe fittings.
3. Remove cover, use care when handling bimetal element, and insert element in bulb well.
4. Note that cutout of mounting flange on bulb well must be at the top. This cutout allows clearance for scale setting lock screw. Insert mounting screws provided through keyhole slot in thermostat housing to engage corresponding holes in bulb well mounting flange. Align thermostat and tighten mounting screws securely.
5. Make electrical connections and replace thermostat cover.

Wiring: Terminals are located under thermostat cover. Knockouts for 1/2-inch conduit connectors at top of case. Make all electrical connections to thermostat in accordance with the installation wiring diagram for the job.

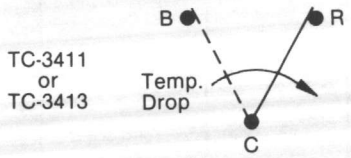

TA-3432, TA-3433 and TA-3434 open circuit on rise of temperature above setpoint.

TA-3441 opens circuit on drop of temperature below setpoint.

RUN/ADJUST

Adjustment: The lever setting determines the operating point of the thermostat. The lever can be locked in place by tightening the dial setting lock screw to prevent unauthorized tampering or resetting of thermostat control point.

Differential: To increase the differential, bend the switch actuating cam up, using a narrow screwdriver. A 1/32-inch upward bend at the left end of the cam increases the differential approximately 2°F.

CHECKOUT

While media temperature is in the scale range of unit, determine the media temperature, then move the scale slider above and below the media setting and verify internal switch action using a VOM.

SERVICE AND REPAIR

Calibration: The thermostats are factory calibrated and should not require further attention. However, if for any reason a thermostat requires calibration, proceed as follows:

1. Set the temperature lever to correspond to actual temperature of medium being controlled. Use an accurate thermometer and allow both thermometer and thermostat to settle out for approximately ten minutes.
2. Turn off power to thermostat and then remove thermostat cover.
3. Insert a narrow blade screwdriver from upper left-hand corner and turn calibrating screw clockwise to lower control point temperature, and counterclockwise to raise control point temperature. Turn the calibrating screw either to the right or to the left (clockwise or counterclockwise) as required until the switch clicks.
4. Rotate the calibrating screw in the opposite direction until the switch clicks again.
5. Set calibrating screw halfway between point where switch clicks (one full turn of calibrating screw represents approximately 10°F).
6. Re-install all electrical connections and replace thermostat cover.

Maintenance: No special maintenance is required. However, the exterior of the unit should be free from foreign material.

Repair: Field repair of the thermostat is not recommended. If the system is not operating correctly and the reason is traced to the thermostat, it should be replaced.

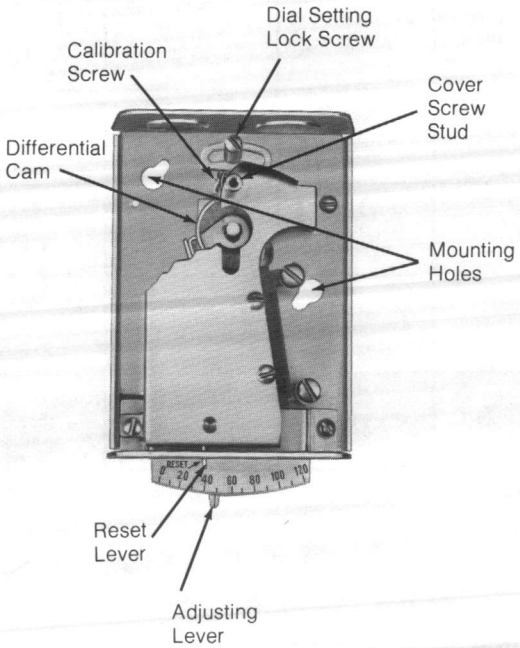

Barber-Colman Company
ENVIRONMENTAL CONTROLS DIVISION

1354 Clifford Avenue
P.O. Box 2940
Loves Park, IL U.S.A. 61132-2940

LITHO IN U.S.A.

V-5

(Replaced by VC, VP, VS-9273) **VC-2124**
VP-2124

Body Pattern: 1/2" to 1-1/2" Globe Screwed, 1" to 1-1/2" 300 lb. Globe Flanged
Flow Type: Equal Percentage
Body Material: Steel
Seat Material: Stainless Steel
Stem Material: Stainless Steel
Plug Material: Stainless Steel
Disc: None
Stem Packing: Teflon "V" Rings
Max. Operating Press.—Steam: 400 psig G.S., 300 psig G.F.
Max. Operating Press.—Water: 600 psig G.S., 300 psig G.F.
Recommended Diff. Press.—Steam: 100 psig
Recommended Diff. Press.—Water: 100 psig
Fluid Temps.—Steam: 446°F (230°C) G.S., 420°F (216°C) G.F.
Fluid Temps.—Water: 450°F (232°C) G.S. 400°F (204°C) G.F.
Cv Rating: .95, 1.8, 2.5, 4.0, 7.4, 9.0, 17.4, 33.4

VP-2224 Proportional, Spring Return or Non-Spring Return, 1/2" to 1-1/2" Valves **VP-2224** ☐

Used for proportional control of high temperature water or high pressure steam.

(Replaced by VC-9253) **VC-2604**

(Replaced by VA-9313) **VA-3142**
(Replaced by VP-9313) **VP-3142**

Flow Type: Diverting
Body Material: Brass
Max. Operating Press.—Water: 200 psig
Maximum Closeoff: 10 psi
Fluid Temps: 200°F (93°C) Maximum
Cv Rating: 3.8

VA-3203 Two-Position, SAE Flared, 5/8" O.D. Diverting Valves **VA-3203** ☐

Used for two-position diverting control of supply water for fan-coil units, convectors, and base board radiation. Manual opener.

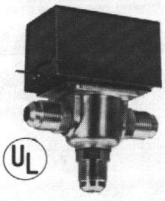

(Replaced by VS-9312) **VP-3242**

(Replaced by VS-9332) **VP-3342**

Flow Type: Diverting V-5 FCU's
Body Material: Brass
Max. Operating Press.—Water: 200 psig
Maximum Closeoff: 10 psi
Fluid Temps: 200°F (93°C) Maximum
Cv Rating: 3.8

VA-3403 Two-Position, Diverting, 5/8" or 7/8" O.D. Sweat Valves **VA-3403** ☐

Used for two-position diverting control of supply water for fan-coil units, convectors and base board radiation. Manual opener.

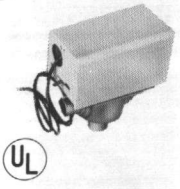

(Replaced by VS-9312) **VP-3542**

Sizes: 2" to 24"
Body Pattern: Flangeless Wafer with 125 lb./150 lb. ASA Flange Rating
Flow Type: Equal Percentage
Body Material: Iron
Stem Material: Stainless Steel
Disc: Iron
Stem Packing: Teflon Impregnated Asbestos
Max. Operating Press.—Steam: 35 psig
Max. Operating Press.—Water: 150 psig
Fluid Temps.—Steam: 281°F (138°C) Maximum
Fluid Temps.—Water: 350°F (176°C) Maximum
Cv Rating: 75, 115, 170, 275, 440, 640, 1150, 1850, 2650, 3400, 4500, 5400, 7000, 10,000

VC-6064, VC-6065 Two-Position, Two-Way, Metal Seat, 2" to 24" Butterfly Valves **VC-6064** ☐ **VC-6065** ☐

VP-6064, VP-6065 Proportional, Two-Way, Metal Seat, 2" to 24" Butterfly Valves **VP-6064** ☐ **VP-6065** ☐

Used for control of steam or water where minor leakage is permissible.

VC,VP-6064 VC,VP-6065

☐ **VC-6164**
☐ **VC-6165**
☐ **VP-6164**
☐ **VP-6165**

VC-6164, VC-6165 Two-Position, Two-Way, Rubber-Lined, 2″ to 12″ Butterfly Valves

VP-6164, VP-6165 Proportional, Two-Way, Rubber-Lined, 2″ to 12″ Butterfly Valves

Used for control of low pressure steam or water where tight shut-off is required.

VC,VP-6164

VC,VP-6165

Sizes: 2″ to 12″
Body Pattern: 125 lb./150 lb. ASA Flange Rating
Flow Type: Equal Percentage
Body Material: Iron
Seat Material: Replaceable EPT Rubber Liner
Stem Material: Stainless Steel
Disc: Nickel Plated Ductile Iron
Stem Packing: "O" Ring
Max. Operating Press.—Steam: 30 psig
Max. Operating Press.—Water: 150 psig
Fluid Temps.—Steam: 275°F (135°C) Maximum
Fluid Temps.—Water: 275°F (135°C) Maximum
Cv Rating: 45, 70, 100, 200, 425, 680, 1125, 1750, 2600

☐ **VC-6664**
☐ **VC-6665**
☐ **VP-6664**
☐ **VP-6665**

VC-6664, VC-6665 Two-Position, Three-Way, Metal Seat, 2″ to 24″ Butterfly Valves

VP-6664, VP-6665 Proportional, Three-Way, Metal Seat, 2″ to 24″ Butterfly Valves

Used for diverting or mixing control of water where minor leakage is permissible.

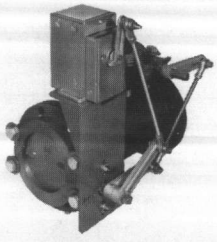

VC,VP-6664

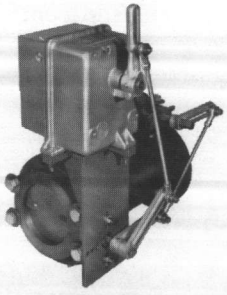

VC,VP-6665

Sizes: 2″ to 24″
Body Pattern: 2 Flangeless Wafers with 125 lb./150 lb. ASA Flanges Mounted on 125 lb. Cast Iron Tee
Flow Type: Mixing or Diverting
Body Material: Iron
Stem Material: Stainless Steel
Disc: Iron
Stem Packing: Teflon Impregnated Asbestos
Max. Operating Press.—Steam: None
Max. Operating Press.—Water: 125 psig
Fluid Temps.—Steam: No Rating
Fluid Temps.—Water: 350°F (176°C) Maximum
Cv Rating: 75, 115, 170, 275, 440, 640, 1150, 1850, 2650, 3400, 4500, 5400, 7000, 10,000

☐ **VC-6764**
☐ **VC-6765**
☐ **VP-6764**
☐ **VP-6765**

VC-6764, VC-6765 Two-Position, Three-Way, Rubber-Lined, 2″ to 12″ Butterfly Valves

VP-6764, VP-6765 Proportional, Three-Way, Rubber-Lined, 2″ to 12″ Butterfly Valves

Used for diverting or mixing control of water where tight shut-off is required.

VC,VP-6764

VC,VP-6765

Sizes: 2″ to 12″
Body Pattern: 2 Butterflies with 125 lb./150 lb. ASA Flange Ratings Mounted on 125 lb. Cast Iron Tee
Flow Type: Mixing or Diverting
Body Material: Iron
Seat Material: Replaceable EPT Rubber Liner
Stem Material: Stainless Steel
Disc: Nickel Plated Ductile Iron
Stem Packing: "O" Ring
Max. Operating Press.—Steam: No Rating
Max. Operating Press.—Water: 125 psig
Fluid Temps.—Steam: No Rating
Fluid Temps.—Water: 275°F (135°C) Maximum
Cv Rating: 45, 70, 100, 200, 425, 680, 1125, 1750, 2600

VALVES ELECTRIC — ZONE, DIVERTING

TO SELECT A VALVE BODY

APPLICATION		HOT OR CHILLED WATER		
Fitting		**SAE FLARED**	**SWEAT**	**SWEAT**
Complete Assembly		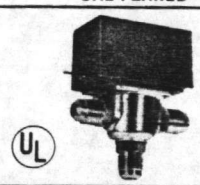	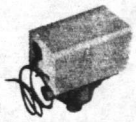	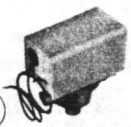
Note: XXX (Actuator Code)		VA-3203-XXX-5-4	VA-3403-XXX-6-4	VA-3403-XXX-6-5
Size		5/8" O.D.	5/8" O.D.	7/8" O.D.
Flow Type		Two-Position	Two-Position	Two-Position
Material	**Body**	Brass	Brass	Brass
	Seat	Brass	Brass	Brass
	Stem	Stainless Steel	Stainless Steel	Stainless Steel
	Plug	E.P. Rubber	E.P. Rubber	E.P. Rubber
	Packing	"O" Ring	"O" Ring	"O" Ring
Flow Coefficient — C_v		3.8	3.8	3.8
Maximum Pressure (PSIG)				
Static		200	200	200
Inlet		200	200	200
Differential		10	10	10
Close-Off		10	10	10
Ambient Rating °F (°C)				
Operating		40-200 (4-93)	40-200 (4-93)	40-200 (4-93)
Shipping		-40 to 200 (-40 to 93)	-40 to 200 (-40 to 93)	-40 to 200 (-40 to 93)

TO SELECT AN ACTUATOR CODE

ACTUATOR CODES

Input To Motor	Voltage	24	120	220-240
	Amp	.32	.07	.03
Without Auxiliary Switch		201	211	221
With Auxiliary Switch*		202	212	222

Dimensions inches (mm)

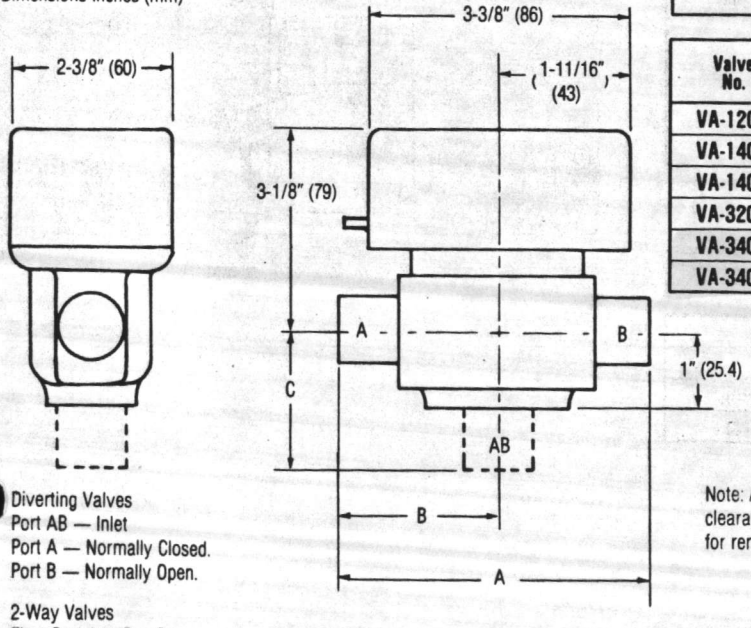

Valve No.	Size	Dimensions Inches (mm)		
		A	B	C
VA-1203	5/8	4-1/2 (114)	2-1/8 (54)	—
VA-1403	5/8	3-1/8 (79)	1-9/16 (40)	—
VA-1403	7/8	3-3/4 (95)	1-7/8 (48)	—
VA-3203	5/8	4-1/4 (108)	2-1/8 (54)	2-1/4 (57)
VA-3403	5/8	3-1/8 (79)	1-9/16 (40)	1-9/16 (40)
VA-3403	7/8	3-3/4 (95)	1-7/8 (48)	2 (51)

Diverting Valves
Port AB — Inlet
Port A — Normally Closed.
Port B — Normally Open.

2-Way Valves
Flow Port A to Port B

Note: Allow 2-1/2" (64mm) clearance above top of cover for removal.

V-4

VC-8044* ⊏
VP-8044* ⊏
VP-8045 ⊏

Body Pattern: 125 lb. Globe Flanged
Flow Type: Mixing
Body Material: Iron
Seat Material: Brass
Stem Material: Stainless Steel
Plug Material: Brass
Disc: None
Stem Packing: Graphite
Max. Operating Press.—Steam: No Rating
Max. Operating Press.—Water: 125 psig
Recommended Diff. Press.—Steam: No Rating
Recommended Diff. Press.—Water: 35 psig
Fluid Temps.—Steam: No Rating
Fluid Temps.—Water: +40°F (4°C) thru 300°F (149°C)
Cv Rating: 74, 101, 170, 290, 390

VC-8044 Two-Position, Non-Spring Return, 2-1/2" to 4" Mixing Valves

VP-8044 Proportional, Spring Return or Non-Spring Return, 2-1/2" to 6" Mixing Valves (Assembly for 5" and 6" Bodies not shown)

VP-8045 Proportional Non-Spring Return, 4" to 6" Mixing Valves

Used for control of liquids on mixing applications, air conditioning systems, and in hot water heating installations.

S.L.

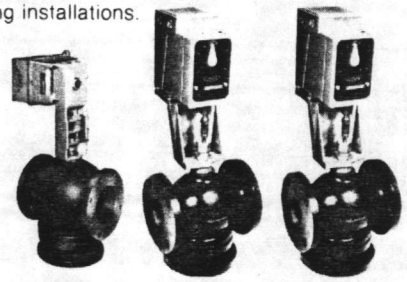

VP-8045 VP-8044 VC-8044

***VA-8041, VC and VP-8044 (1/2 thru 2") replaced by VA, VC, VP, VS-9313**

VP-8174* ⊏

Body Pattern: 125 lb. Globe Flanged
Flow Type: Diverting
Body Material: Iron
Seat Material: Brass
Stem Material: Stainless Steel
Piston Material: Brass
Piston Seal: Teflon Insert with Ethaylene Propylene "O" Ring
Disc: None
Stem Packing: Teflon Asbestos
Max. Operating Press.—Steam: No Rating
Max. Operating Press.—Water: 125 psig
Recommended Diff. Press.—Steam: No Rating
Recommended Diff. Press.—Water: 35 psig
Fluid Temps.—Steam: No Rating
Fluid Temps.—Water: 40°F (4°C) thru 300°F (149°C)
Cv Rating: 68, 85, 160, 195, 250

VP-8174 Proportional, Spring Return or Non-Spring Return, 2-1/2" to 6" Diverting Valves

Used for proportional control of liquids on diverting applications.

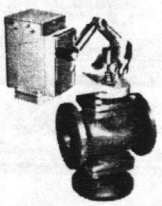

VP-8174 (4" thru 6" bodies)

VP-8174 (2-1/2" thru 3" bodies)

***VP-8174 (1/2 thru 2") replaced by VP-9323 and VS-9323**

V-4

LAUNDRY UH.

VA-9211-200 ⊏
VS-9211-200 ⊏

Flow Type: Equal Percentage
Body Material: Brass
Seat Material: Brass
Stem Material: Stainless Steel
Plug Material: Brass
Disc: Composition
Stem Packing: Teflon "V" Rings
Max. Operating Press.—Steam: 35 psig
Max. Operating Press.—Water: 250 psig
Recommended Diff. Press.—Steam: 20 psig
Recommended Diff. Press.—Water: 35 psig
Fluid Temps.—Steam: 281°F (138°C) Maximum
Fluid Temps.—Water: +40°F (4°C) thru 281°F (138°C)
Cv Rating: .4, 1.3, 2.2, 3.3, 5.0, 6.2, 8.2, 10.5, 12.0, 15.0

VA-9211-200 Two-Position, Normally Open, Union End, 1/2" to 1-1/4" Valves

VS-9211-200 Electronic, Proportional, Normally Open, Union End, 1/2" to 1-1/4" Valves

Used for control of hot and chilled water or low pressure steam. Used primarily on fan-coil units, radiators, and small unitary air conditioners.

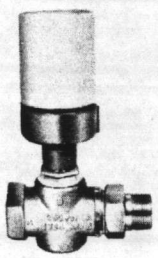

VALVES ELECTRIC — 2-WAY ASSEMBLIES & TEMPERATURE RATINGS

V-4

	ACTUATORS					
	Series 200	Series 300	Series 400	Series 450	Series 900	Series 950
	(MA-5200)	(MA, MP, MU-Spring Return)	(MC, MU, MP-Non-Spring Return)		(MP-9750)	(MP-9810)

TO SELECT A LINKAGE

Part Number		LINKAGE					
VB-9000, VB-111	1/2"—1-1/4"	AV-600	AV-391	AV-393			
	1-1/2"—2"		AV-392	AV-394			
VB-202	2-1/2"—4"		AV-329	AV-330		Not Avail Separately	
	5"—6"				AV-352	Not Avail Separately	Not Avail Separately
VB-222	Style A		AV-347	AV-347-10			
	Style B		AV-347-20	AV-347-30			

TO SELECT AN ASSEMBLED BODY & LINKAGE

Body & Linkage (Factory Assembled)	VB-111-600-3-P VB-9211-200-4-P VB-9212-200-4-P VB-9213-200-4-P VB-9221-200-4-P VB-9222-200-4-P VB-9223-200-4-P VB-9253-200-4-P VB-9263-200-4-P VB-9273-200-4-P VB-9283-200-4-P					

TO SELECT A COMPLETE VALVE ASSEMBLY

	STEM UP OPEN (NON-SPRING RETURN)					
Body, Linkage and Actuator (Factory Assembled)*			VC-2024-1XX-2-P VP-2024-1XX-2-P VU-2024-1XX-2-P VP-2224-1XX-X-P VC-9213-4XX-4-P VP-9213-4XX-4-P VU-9213-40X-4-P VC-9253-4XX-4-P VP-9253-4XX-4-P VU-9253-40X-4-P VC-9273-4XX-4-P VP-9273-4XX-4-P VU-9273-40X-4-P	VC-2024-1XX-2-P VP-2024-1XX-2-P	VP-2025-9XX-2-P	VP-2025-9XX-2-P
	NORMALLY OPEN (SPRING RETURN)					
	VA-1112-6XX-3-P VA-9211-2XX-4-P VA-9212-2XX-4-P VA-9213-2XX-4-P VA-9253-2XX-4-P VA-9273-2XX-4-P	VP-2024-15X-2-P VP-2224-15X-X-P VA-9213-30X-4-P VP-9213-3XX-4-P VU-9213-3XX-4-P VA-9253-30X-4-P VP-9253-3XX-4-P VU-9253-3XX-4-P VA-9273-30X-4-P VP-9273-3XX-4-P VU-9273-3XX-4-P				
NOTE: For specific Actuator Assembly Codes see following pages.	NORMALLY CLOSED (SPRING RETURN)					
	VA-9221-2XX-4-P VA-9222-2XX-4-P VA-9223-2XX-4-P VA-9263-2XX-4-P VA-9283-2XX-4-P	VP-2024-15X-2-P VU-2024-15X-2-P VP-2224-15X-X-P VA-9213-31X-4-P VP-9213-3XX-4-P VU-9213-30X-4-P VA-9253-31X-4-P VP-9253-3XX-4-P VU-9253-30X-4-P VA-9273-31X-4-P VP-9273-3XX-4-P VU-9273-30X-4-P				

		TEMPERATURES °F (°C)					
Maximum Ambient		140° (60°)	136° (57°)	136° (57°)	136° (57°)	130° (54°)	130° (54°)
Resultant Fluid		200° (93°)	260° (126°)	260° (126°)	260° (126°)	260° (126°)	260° (126°)
VB-111-0-3-P	Max. Fluid	281° (138°)					
	Result. Ambient	115° (46°)					
VB-202-0-4-P VB-9213-0-4-P VB-9223-0-2-P	Max. Fluid	281° (138°)	281° (138°)	281° (138°)	281° (138°)	281° (138°)	281° (138°)
	Result. Ambient	115° (46°)	125° (52°)	125° (52°)	125° (52°)	125° (52°)	125° (52°)
VB-222-0-1-P VB-222-0-2-P	Max. Fluid		450° (232°)	450° (232°)			
	Result. Ambient		80° (27°)	80° (27°)			
VB-9273-0-4-P VB-9283-0-4-P	Max. Fluid	366° (185°)	366° (185°)	366° (185°)			
	Result. Ambient	90° (32°)	100° (38°)	100° (38°)			
VB-9211-0-4-P VB-9212-0-4-P VB-9221-0-4-P VB-9222-0-4-P	Max. Fluid	281° (138°)					
	Result. Ambient	115° (46°)					
VB-9253-0-4-P VB-9263-0-4-P	Max. Fluid	340° (171°)	340° (171°)	340° (171°)			
	Result. Ambient	100° (38°)	100° (38°)	100° (38°)			

*NOTE: Factory assemblies are not available for two position applications using reduced port valve bodies

CONTINUED ON NEXT PAGE

T-3

General Instructions

TA-1101, TA-1102
Two Position
Electric Room Thermostat

For on-off control of unit heater motors, electrical heaters, high input motor starter coils.

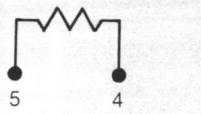

Night Depression Resistor
(Certain Models)

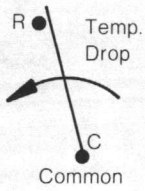

R makes on
temp. drop

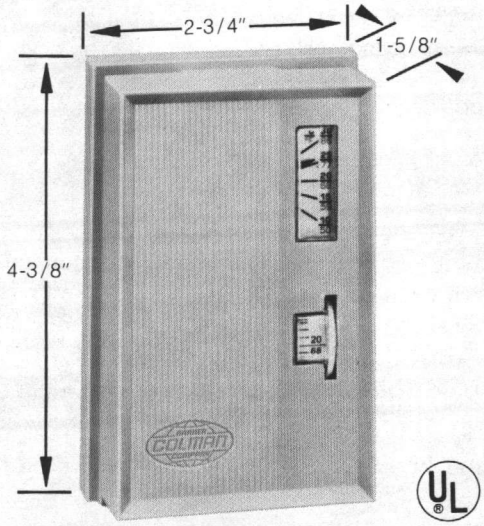

Part No.	Control* Dial Range	Full Load Amps		Locked Rotor Amps		Non-Inductive Amps			Pilot Duty VA
		24/120 Vac	240 Vac	24/120 Vac	240 Vac	120 Vac	240 Vac	277 Vac	
TA-1101	55-85°F (13-29°C)	7.2	3.6	43.2	21.6	7.5	7.5	7.0	68 @ 24 Vac
TA-1102	45-75°F (7-23°C)								340 @ 120/240 Vac

*Units marked in both °F and °C, dial stop pins included to limit control range.

Bimetal operated snap action SPST switch with heavy duty contacts. Coded screw terminals. Differential 2°F maximum. Units have plastic covers as standard. Mounts on flush or surface switch box.

Dimensions: 4-3/8" high × 2-3/4" wide × 1-5/8" deep.

ACCESSORIES

AT-101 Lock cover kit
AT-104 Dial stop pins (NOTE: pins included with each unit)
AT-136 Title plates (day, night, heat, cool)
AT-504 Plaster hole cover kit (small)
AT-505 Surface mounting base
AT-546 Auxiliary mounting plate
AT-602 Selector switch sub-base DP4T
AT-603 Selector switch sub-base one DP4T, one DPDT
AT-1103 Wire guard
AT-1104 Cast aluminum guard
AT-1105 Plastic guard
AT-1155 Plastic guard
AT-1165 Plastic guard
Tool 11 Calibration wrench
Tool 13 Contact burnishing tool

OPTIONS

Add "dash-number" (-XXX) suffix to base part number for desired option.

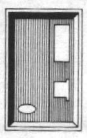
Standard

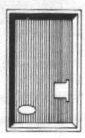
-400

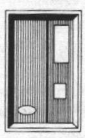
-401

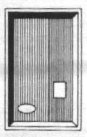
-402

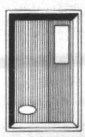
-403

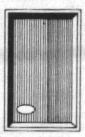
-404

—601 10°F night depression 120V Standard Cover†
—602 10°F night depression 24V Standard Cover†
—603 10°F night depression 240V Standard Cover†

†Normally, night depression is controlled by a centrally located time clock such as AE-174 or AE-178, or by selector switch sub-bases (AT-602 or AT-603).

INSTALLATION

Requirements

Locate thermostat where it will be exposed to unrestricted circulation of air which represents the average temperature of the controlled space. Do not locate the thermostat near sources of heat or cold, such as lamps, motors, sunlight or concealed ducts or pipes. The thermostat is designed for service in any normally encountered human environment.

Procedure

1. Pull all wires. (Use copper wire only.)
2. Fasten mounting plate to box or wall.
3. Make electrical connections to thermostat screw type terminals. Make all connections in accordance with the job wiring diagram and in compliance with national and local electrical codes. Class I wiring is required unless all circuits to contacts are powered from a Class II source.
4. Hook thermostat on top of mounting plate and swing down into place.
5. Tighten thermostat mounting screw.

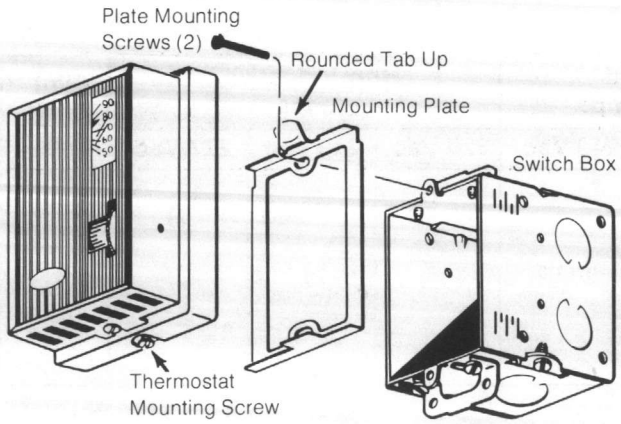

CHECKOUT

After installing a thermostat, make an initial check of the switching action. Verify the switch action by listening to and watching the switch contacts, using a voltmeter between the proper sides of the switch, or observing the controlled device.

1. Run the setpoint dial to a temperature above ambient. This should cause the thermostat to switch, calling for heat.
2. Turn the setpoint dial setting down gradually. The switch should break contact.

Calibration

All thermostats are calibrated at the factory and normally will not require any such attention. However, if recalibration is necessary for any reason, proceed as follows:

1. Disconnect power to thermostat.
2. Set the adjusting dial to correspond to actual room temperature.
3. Remove thermostat cover, remove screw that secures right-hand side of insulator, fold back insulator and remove contact cover. (See Figure 1.)

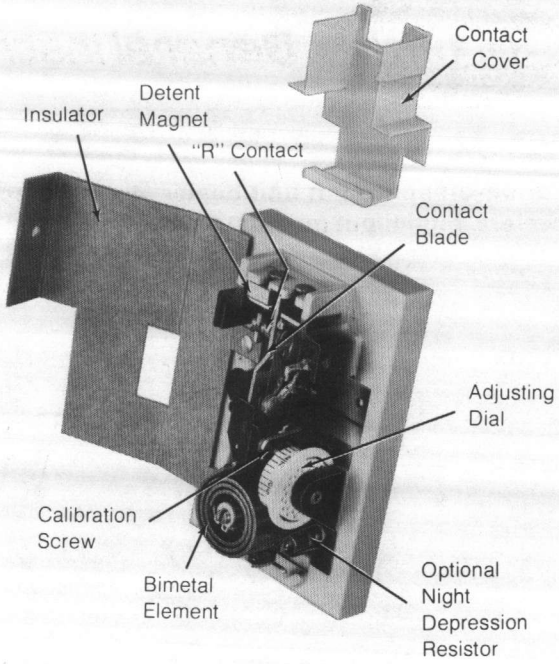

Figure 1

Do not breathe on the thermostat or handle excessively as this will affect the accuracy of the final calibration.

4. If contact blade is made to the left (R) contact, use a 3/16-inch open end wrench to turn calibration screw counterclockwise (looking at head of screw) until blade just breaks contact. Note: Each complete revolution of screw changes calibration approximately 8°F. Thermostat is now properly calibrated.
5. If contact is **not** made to the left, turn the calibration screw slowly clockwise until element makes to the R contact. Then turn screw very slowly counterclockwise until blade just breaks contact. Thermostat is now properly calibrated.
6. Replace contact cover insulator and thermostat cover.
7. Restore power to thermostat.
8. Recheck calibration about 30 minutes later to be sure heat from handling did not result in erroneous setting.

MAINTENANCE

Open areas at bottom and around base of thermostat should be kept clean and free from obstructions to allow proper flow of air. If switch contacts need cleaning, this may be done with a TOOL-13 contact burnishing tool.

REPAIR

Field repair of the thermostat is not recommended. If the system is not operating correctly and the reason is traced to the thermostat, it should be replaced.

Barber-Colman Company
ENVIRONMENTAL CONTROLS DIVISION

1354 Clifford Avenue
P.O. Box 2940
Loves Park, IL U.S.A. 61132-2940

A-Q-3

General Instructions

Strap-On-Thermostat TC-2974

DEVICE INFORMATION

Identification

These thermostats are used to either open or close electrical circuits when the temperature of a pipe exceeds the thermostat setting. The orn-red circuit is often used on the unit heater installations to prevent operation of the fan unless heat is actually available. The orn-brn circuit is usually used for control on hot water boilers.

Pre-Installation

The thermostats are shipped with a metal strap and spring, which will fit supply lines up to 4-inch O.D. For dimensions see Figure 1.

Before installing the thermostat, look for bent or broken parts.

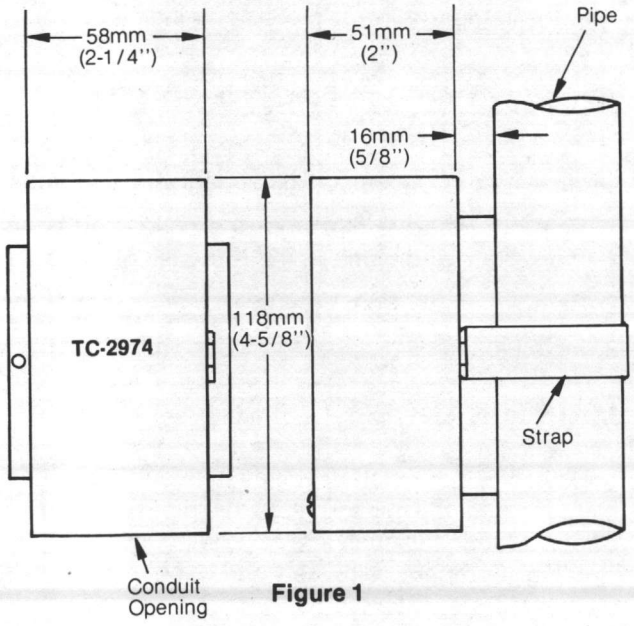

Figure 1

Scale* °C (°F)	Differential °C (°F)	SPDT Switch Ratings (ac Only)			
		Voltage (Vac)	FLA (amps)	LRA (amps)	Pilot Duty (VA)
10-99	Fixed 5.5	120	9.8	58.8	360
(50-210)	(Fixed 10)	240	8	48	360

*The scale is dual marked in degrees C and degrees F.

INSTALLATION

Requirements

The thermostat can be mounted in any position on a smooth clean pipe. Be sure pipe is free of rust, scale or insulation material.

Ambient Rating: –40 to 60°C (–40 to 140°F).

Procedure

1. Insert the spring loops into the holes provided in the strap and in the side of the housing.
2. Wrap the strap around the pipe and thread through the opening provided in the housing.
3. Push the device against the pipe to compress the foam spacer until the bulb is 6 mm (1/4-inch) from the back of the housing.
4. Pull the strap tight and bend to lock the device in place.
5. Clip off or bend back the excess strap.

Wiring: The thermostat has one 13mm (1/2)–19mm (3/4-inch) conduit opening in bottom of housing. Make all electrical connections in accordance with the job wiring diagram and in compliance with national and local electrical codes. Device terminal coding, switch action, and wiring is shown in typical application (Figures 2 and 3).

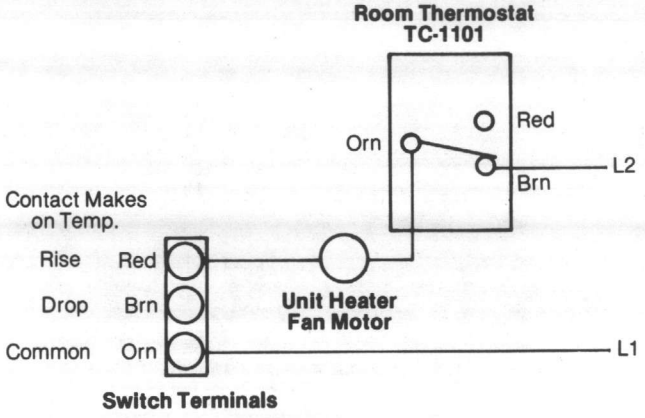

Typical unit heater application wiring for strap-on thermostat TC-2974. Unit heater fan runs only when heating supply media is above the setpoint of TC-2974.

Figure 2

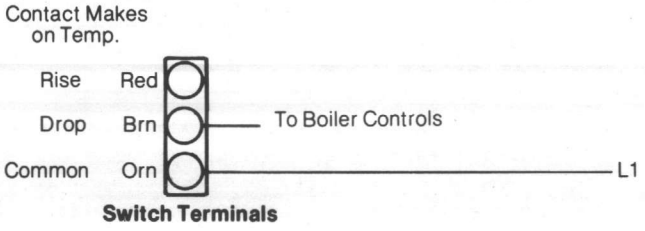

Typical hot water boiler application wiring for strap-on thermostat TC-2974. Boiler runs only when water temperature is below the setpoint of TC-2974.

Figure 3

CHECKOUT

After installing the thermostat, proceed as follows:

1. With electrical power on and hot water flowing through the pipe, rotate the setpoint dial from minimum to maximum and check fan operation. If wired orange and red, the fan will start at minimum dial setting and stop at maximum dial setting. The reverse will occur if wired orange to brown.

2. If no electrical power is available, contact closure may be checked with an ohmmeter.

3. The differential is factory set to provide the following switch action:

   a. At 5°F above the setpoint an orn-red circuit is made.

   b. At 5°F below the setpoint an orn-brn circuit is made.

RUN/ADJUST

Setpoint

Screwdriver adjustment. Scales dual marked °F on front and °C on back. To change scale, remove spring retaining ring, select scale and replace retaining ring.

Refer to **CHECKOUT** for manual operation.

CALIBRATION

1. Disconnect power to thermostat.

2. Soak the bulb for 10 minutes at a known temperature.

3. Turn the dial until the thermostat clicks, reverse the dial until it clicks again.

4. Turn the dial midway between the click points.

5. Turn the calibration nut (located under the dial) until the temperature of the bulb is indicated on the dial.

CONCEALED SETPOINT AND LOCK COVER SCREW

Order AT-210 Concealed Adjustment Kit Separately.

1. Peel off adhesive film from the concealed adjustment plate and place into the recess of the cover.
2. Remove screw from the cover.
3. Install lock cover screw provided with AT-210.

MAINTENANCE

If excessive corrosion develops between the sensing element and the pipe, clean the pipe and apply a silicone lubricant such as #6 compound from Dow Corning Company between the pipe and sensing element to prevent additional corrosion.

REPAIR

Field repair of the thermostat is not recommended. If the system is not operating correctly and the reason is traced to the thermostat, it should be replaced.

Barber-Colman Company
ENVIRONMENTAL CONTROLS DIVISION
1300 Rock Street, Rockford, Illinois, U.S.A., 61101

LITHO IN U.S.A.

TLL

General Instructions

Thermostats
Low Temperature
TC-5131
TC-5141

DEVICE INFORMATION

For low or line voltage low limit control of temperature in ducts.

Metal case with 1/2" conduit opening. Vapor pressure type thermal element controls snap action SPDT switch. 20' × .094" OD copper element. Thermostat responds to lowest temperature sensed by any one foot section of its element. Coded screw terminals. Differential fixed at 5°F. Ambient at case must be 5°F above setpoint to a maximum of 150°F.

Dimensions: Case, 2-1/2" high × 3-1/8" wide × 2-3/16" deep.

OPTIONS

TC-5131-201 includes 4-1/2' 208/240 Vac power cord.

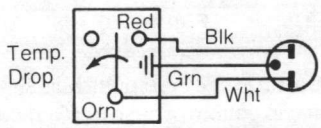

TC-5131-201 or TC-5141-201

ACCESSORIES

None

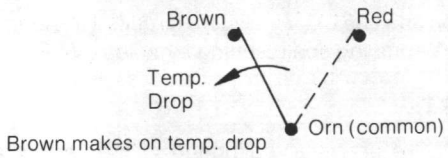

TC-5131 or TC-5141

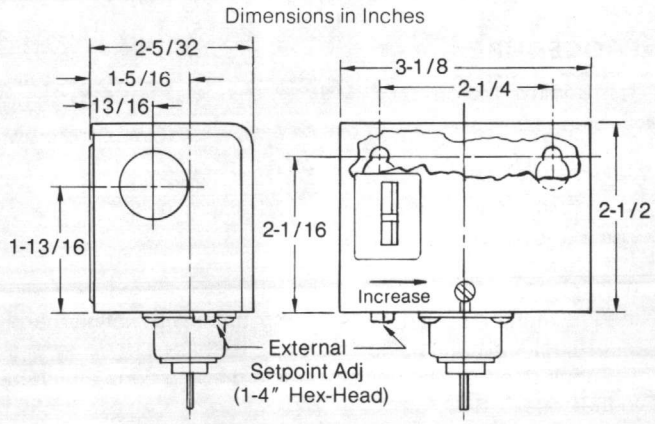

Case can be mounted in any position

Figure 1

PERFORMANCE

Part Number	Device Type	Control Dial Range*	Voltage Vac	Full Load Amps	Locked Rotor Amps	Pilot Duty (VA)	Non-Inductive Amps
TC-5131	Low temp. auto reset	34-60°F (1.1-16°C)	24	—	—	100	16
			120	13.8	82.8	650	16
			208	9.6	57.6	750	9.6
TC-5141	Low temp. manual reset**	34-60°F (1.1-16°C)	240	8.3	49.8	750	8.3
			277	—	—	—	7.2

*Units dual marked °F and °C.

**Reset cannot be accomplished until the sensed temperature is at least 5°F above setpoint.

INSTALLATION

REQUIREMENTS

Install all but a few inches of the thermal element securely in the controlled media for maximum sensing capability and minimum vibration damage. Usual location of the thermal element is on the downstream side of the coil. The element should be serpentined in a horizontal pattern so that it will be exposed to all areas where low temperatures are possible. (See Figure 2.) Capillary hardware is not included.

Note: Do not kink capillary.

Ambient at case must be at least 5°F above setpoint to a maximum of 150°F. Maximum safe bulb temperature is 300°F.

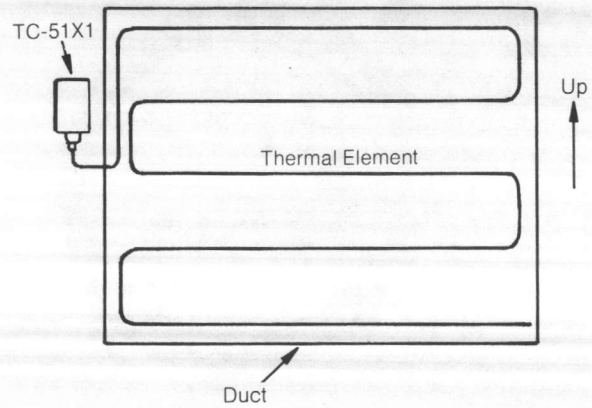

Figure 2

PROCEDURE

1. Remove the cover.
2. Mount case (Figure 2) with two screws (#10 max) in screw slots in back of case (screws not included).
3. Make wiring connections to switch terminals.
4. Replace the cover.

Wiring: Make all electrical connections in accordance with the job wiring diagram and in compliance with national and local electrical codes. Thermostat's case has an opening for a 1/2-inch conduit. The units include a green ground attached to the case.

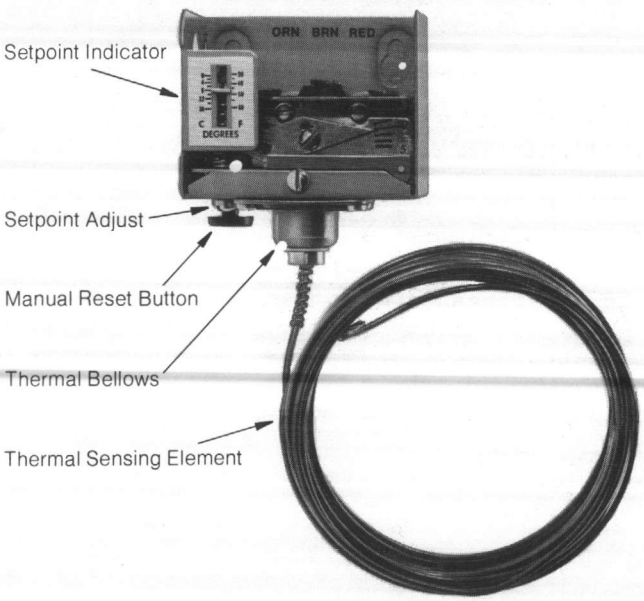

Switch Action (SPDT):

1. On a temperature rise, "orange" (common) makes to "red".
2. On a temperature drop "orange" (common) makes to "brown".
3. See Figure 3 for typical wiring.

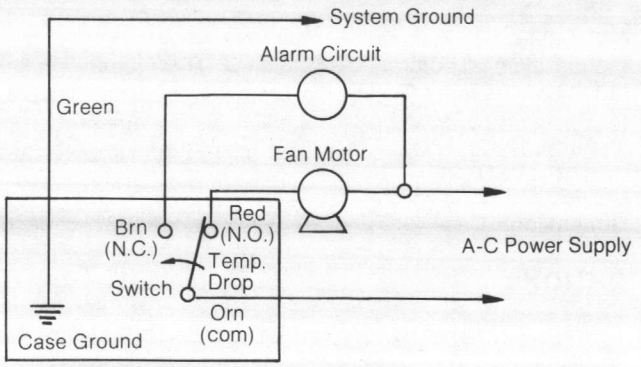

TC-5131 or TC-5141

Figure 3

Temperature Setting: Turn setpoint adjustment screw (1/4" hex head) located in bottom of case until indicating pointer is at desired temperature.

CAUTION

Unit includes mechanical stop to prevent adjustment below 34°F. Do not attempt to set below 34°F as this may damage the device.

CHECKOUT

The reset button on TC-5141 will restore circuits if the element temperature exceeds the scale setting by at least 5°F.

RUN/ADJUST

All thermostats are precision calibrated at the factory and normally will not require any further attention.

REPAIR

Field repair of the thermostat is not recommended. If the system is not operating correctly and the reason is traced to the thermostat, it should be replaced.

Barber-Colman Company
ENVIRONMENTAL CONTROLS DIVISION

1354 Clifford Avenue
P.O. Box 2940
Loves Park, IL U.S.A. 61132-2940

LITHO IN U.S.A.

VALVES PNEUMATIC — 3-WAY CLOSE-OFF PRESSURE RATINGS & ASSEMBLIES

V-2, V-6

TO SELECT AN ACTUATOR SERIES

			ACTUATORS																							
			Series 200										Series 300													
			MK 2690										MK 4600										MK 4621-422			
Spring Range (psig)			3-7				5-10				8-13		3-6				5-10				10-13				10-11.25	
CLOSE-OFF PRESSURE RATING **																										
Supply Air Pressure (psig)			15		20		15		20		15		20		15		20		15		20		15		20	
Stem Position***			SU	SD	SU	SD	SU	SD	SU	SD	SU	SD	SU	SD	SU	SD	SU	SD	SU	SD	SU	SD	SU	SD	SU	SD
Part Number	P Code	Size																								
VB-9312-0-4	-2-4	5/8"	5	100	5	175	60	50	60	135	95	5	95	85	35	250	35	250	130	110	130	240	250	30	250	170
VB-9313-0-4	-2-4	1/2"	5	100	5	185	45	50	45	130	100	5	100	85	35	250	35	250	100	110	100	250	250	25	250	170
	-6	3/4"					20	25	20	70	45		45	45	15	140	15	230	50	60	50	130	155	12	155	90
	-8	1"					10	15	10	45	30		30	30	8	95	8	155	30	40	30	90	100	7	100	60
	-9	1-1/4"					6	9	6	30	15		15	15	4	60	4	100	15	25	15	55	60	3	60	38
	-10	1-1/2"																								
	-11	2"																								
VB-9323-0-4	-4	1/2"							250	250			250	250												
	-6	3/4"							250	250			250	250												
	-8	1"							250	250			250	250												
	-9	1-1/4"							250	250			250	250												
	-10	1-1/2"																								
	-11	2"																								
VB-9332-0-4	-2-3-4	5/8"											37*	37*										75*	75*	75*	75*

TO SELECT AN ASSEMBLED BODY & LINKAGE OR COMPLETE VALVE ASSEMBLY

	LINKAGE			
VB-9XXX	AV-400			AV-401
	Use Yellow Spring	Use Black Spring	Use Blue Spring	
Body & Linkage (Factory Assembled)	VB-9312-201-4-P VB-9313-201-4-P	VB-9312-202-4-P VB-9313-202-4-P VB-9323-202-4-P	VB-9312-203-4-P VB-9313-203-4-P VB-9323-203-4-P VB-9332-203-4-P*	
Body & Linkage & Actuator (Factory Assembled) See Page 303 for Actuator Codes	V-2	VK-9312-2XX-4-P VK-9313-2XX-4-P VK-9323-2XX-4-P VK-9332-2XX-4-P*		VK-9312-3XX-4-P VK-9313-3XX-4-P VK-9332-3XX-4-P*
TEMPERATURES °F (°C)				
Maximum Ambient	220° (104°)			220°(104°)
Resultant Fluid	250° (121°)			250° (121°)
VB-9312-0-4-P VB-9313-0-4-P Maximum Fluid	281° (138°)			281° (138°)
VB-9323-0-4-P VB-9332-0-4-P Resultant Ambient	160° (71°)			160° (71°)

*VK-9332-203-4-X is used as the inlet valve and VK-9332-313-4-X is used as the outlet valve on a four pipe single coil system. 20 psig main is required. Neutral valve position (both ports "just close") have 35 psig close-off pressure for all actuators.

**See flow pattern in dimensional drawings section for flow details since close-off pressure ratings apply with valves properly installed. Close-off ratings in the table are true only when the indicated supply air pressure is applied to the actuator. A change in air pressure at the actuator will alter the actual close-off pressure.

***SU—Stem Up; SD—Stem Down.

RC

General Instructions

Pneumatic Receiver-Controller RKS-1001, 2001, 3002, 4002

General Information: These receiver-controllers are used in conjunction with Barber-Colman transmitters for proportional control of valves and actuators. Depending on the transmitter, they may be used to control temperature, humidity and duct pressures. May be used as single controller, master-submaster or either of above with remote reset of set point.

Construction: A proportional control relay type pneumatic instrument which accepts a 3 to 15 psig signal, and controls using a small portion of the input signal. The unit, depending on model, will accept from 1 to 3 input signals. The stable balanced lever system produces a linear output signal to the actuator based on the value of the input signals.

The units are all capable of being changed in the field from direct to reverse-acting. This action is referenced to the number 1 input signal. The direction of reset effect on the dual input units is reverse only and not field changeable.

The set point of the unit is of a vernier type. The adjustment knob is located under the cover. On units with a remote set point input, the set point may be either adjusted at the instrument or remotely. The remote set point adjuster is ordered separately and not part of the receiver controller.

Supply Air Pressure: 18 psig nominal, 30 psig maximum.

Proportional Band: Adjustable from 2-1/2% to 40% of Input No. 1 transmitter span; i.e., 200F° transmitter span, 5F° = 2-1/2%, 80F° = 40%. At 2-1/2% proportioning band, 5F° will produce a 10 psig change in output pressure (nominally 3–13 psig).

Ambient Temperatures: 150F maximum, 40F minimum.

Authority: On dual input units adjustable from 10 to 200%, 100% authority means that both transmitters have the same authority if they have the same span. 1 psi change at Input No. 1 is balanced by 1 psi change at Input No. 2.

Air Consumption: For sizing air compressors, average air consumption is 0.008 scfm (standard cubic feet per minute). Add 0.024 scfm for each transmitter connected to the receiver-controller. A dual input unit with remote set point would be (.008 + .024 + .024 + .024) = .08 scfm.

Air Capacity: For sizing air mains, receiver-controller air requirement is 16 scim (standard cubic inches per minute). Add 36 scim for each transmitter connected to the receiver-controller (such as a dual input and remote set point adjuster). A receiver-controller with two transmitters and one remote set point adjustor connected would have a total of 124 scim (16 + 36 + 36 + 36).

Air Connections: 1/8" FNPT. Spacing designed to accept 1-1/2" dia. back connected gauges for direct mounting.

Table 1
AVAILABLE RECEIVER CONTROLLER MODELS

Model		Remote SPA	Action*	Authority‡	Proportional Band‡
Single Input	RKS 1001	None	DA	None	2-1/2% to 40% of Primary Transmitter Span.
	RKS 2001	±10% of Primary Transmitter Span	DA		
Dual Input	RKS 3002	None	DA	10% to 200% of Primary Transmitter Span. Adjustable.	
	RKS 4002	±10% of Primary Transmitter Span	DA		

***DA (direct-acting):** Increases output pressure on rise in Input No. 1 pressure. Field changeable to RA. **RA (reverse-acting):** Decreases output pressure on rise in Input No. 1 pressure.

‡Primary transmitter connects to Input No. 1.

INSTALLATION AND MOUNTING

Mount unit in upright position on wall, panel, etc. using the three holes provided. Do not mount on a surface subject to vibration.

Front 1/8" FNPT connections (4) on manifold are spaced to allow installation of 1-1/2" gauges. Connections on top are provided for connection to system piping.

Refer to Figure 1 for location of port connections and table for features of individual units.

Port B - Branch, connected to controlled device.
M - Main, supply air pressure of 18 psig.
2 - Input No. 2, Input from secondary transmitter.
1 - Input No. 1, primary transmitter input.
A - Remote set point adjuster input.

ADJUSTMENTS

Changing From Direct to Reverse-Action (referenced to Input No. 1).

The action (direct or reverse) of the unit must be correct for the application before calibration is attempted. Standard factory assembly is for direct-acting (DA).

When the units are received on the job-site, they may be field converted for reverse-action (RA) as follows:

1. Cut the pilot tube with end cutter on 45° angle as close to the DA pilot tube connection as possible. See Figure 2, for tube location.

2. Remove plug from RA pilot tube connection and tape it to inside of cover. Insert pilot tube into RA tube connection.

3. With 3/16" wrench, turn RA screw in (CW) until contact is made with lever "B". See Figure 2A. With a 3/16" wrench, back DA screw out (CCW) approximately 4 turns. See Figure 3.

If it should be necessary to return the receiver-controller to the direct-acting mode, proceed as follows:

1. Remove the pilot tube from the RA pilot tube connection.

2. Insert plug in to vacated hole.

3. Assemble eyelet EYRF-292 to pilot tube. Remove any tube and eyelet that may be on DA pilot tube connections. Force tube over the DA pilot tube connection.

4. Using pliers, push EYRF-292 eyelet in place to secure pilot tube to DA pilot tube connection.

5. With 3/16" wrench, turn DA screw in (CW) until contact is made with lever "B". With 3/16" wrench, turn RA screw out (CCW) approximately 4 turns.

Attachment of AT 539: To attach the AT 539 external pilot pressure kit, use the following procedure:

1. Remove Receiver Controller restriction cover plate, restriction, and two gaskets (see Figure 2 for location).

2. Replace items in Step 1 with parts in AT 539 kit.

3. Route 5/32" plastic tubing between main and No. 2 input bosses and connect to constant 18 psig main.

4. With pliers break off protrusion on cover that normally fits between the main and No. 2 input bosses.

5. NOTE: When using the AT-539 the restrictions for the transmitters must be removed and the PNC-42 blocking gasket installed. The transmitters then require a remote restrictor.

6. Place cover on receiver-controller.

Percent Proportional Band Adjustment

See Figure 4 for location of adjustment of percent proportional band.

Percent proportional band is a value which is a percentage of the primary transmitter span (Input No. 1) which will produce a 3-13 psig (10 psi change) output in branch line pressure. This setting must be calculated and set prior to calibration of the receiver-controller set point. If changes in proportional band setting are required for stable control, recalibration of the receiver-controller is required.

The formula for converting throttling range to proportional band setting is:

$$\text{Proportional Band Setting} = \frac{\text{Throttling Range}}{\text{Transmitter Span}} \times 100$$

Typical Conversions are:

	Transmitter Span	THROTTLING RANGE			
		50F °F	200F °F	80% RH % RH	2" H_2O "H_2O
PROP. BAND SETTING	2.5	1.25	5	2	.05
	5	2.5	10	4	.1
	10	5	20	8	.2
	15	7.5	30	12	.3
	20	10	40	16	.4
	25	12.5	50	20	.5
	30	15	60	24	.6
	35	17.5	70	28	.7
	40	20	80	32	.8

See F-14246 for conversions for other throttling ranges.

THROTTLING RANGE VS. PROP. BAND SETTING

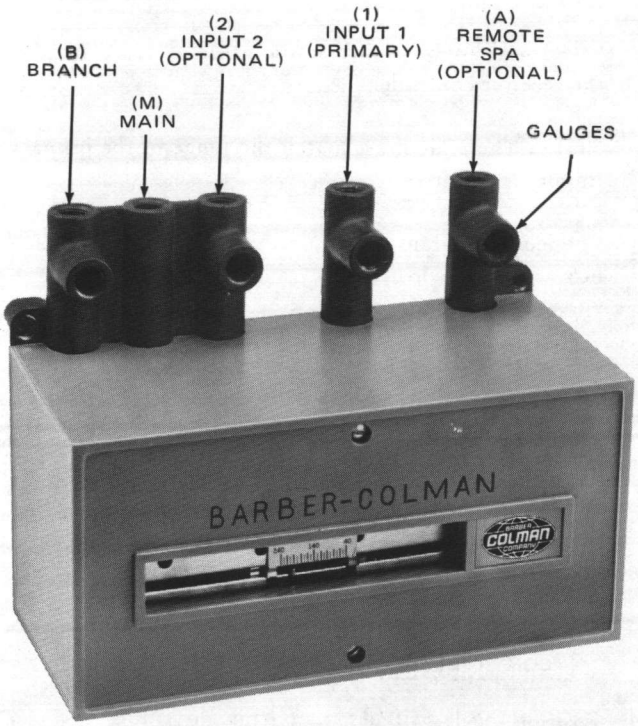

Figure 1 – RECEIVER-CONTROLLER PORT IDENTIFICATION

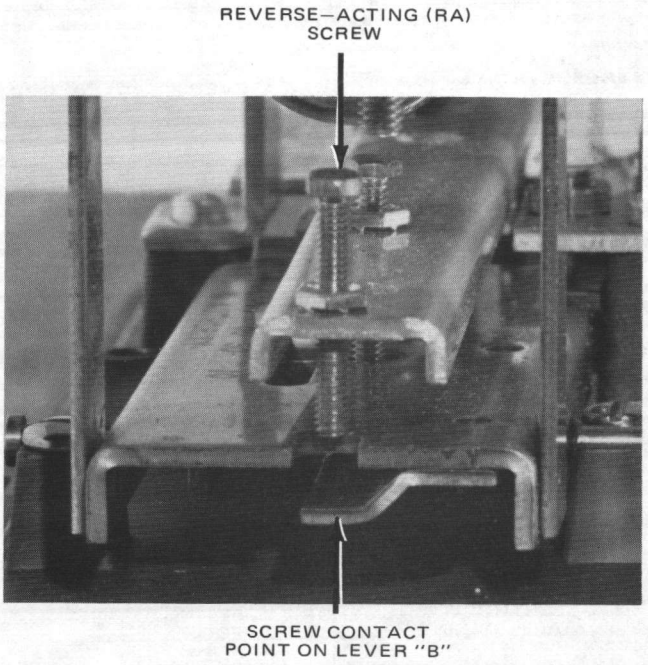

Figure 2a – REVERSE ACTING SCREW ADJUSTMENT

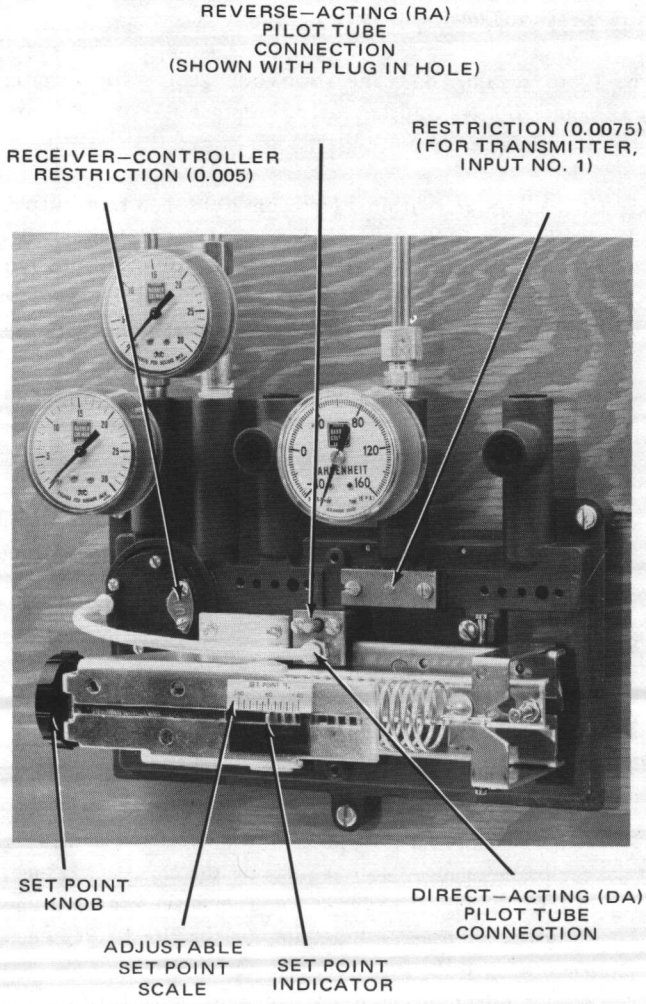

Figure 2

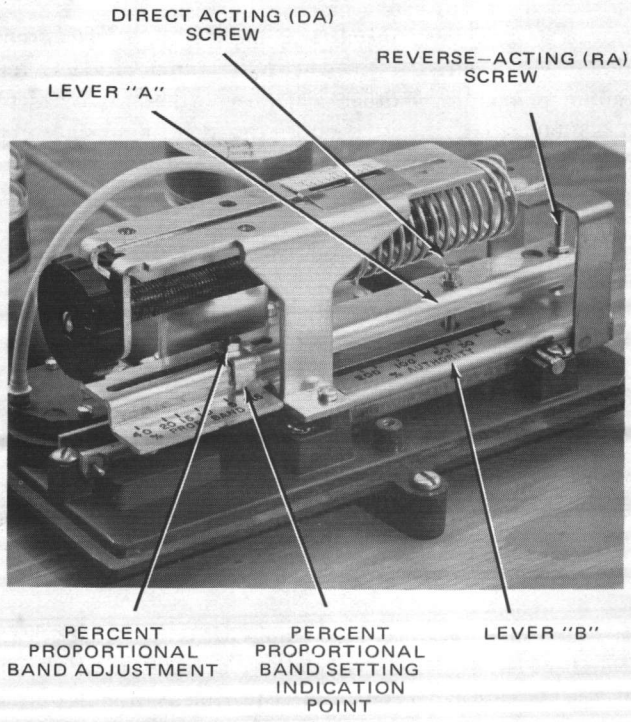

Figure 3

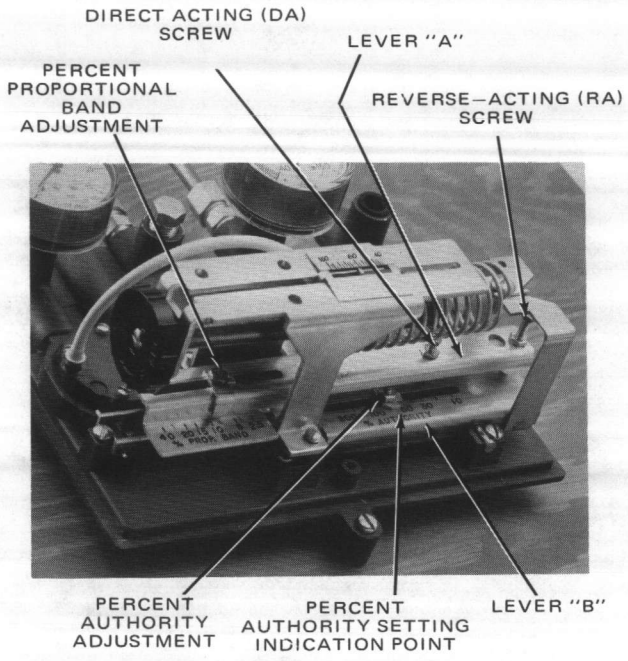

Figure 4

Percent Authority Adjustment

See Figure 4 for location of adjustment of percent authority.

Percent authority is the value that is the ratio of the effect of the secondary transmitter on output pressure compared with the effect of the primary transmitter. Example: 200°F span transmitters at both inputs 1 and 2.

10% authority means input 2 must change 10° in order to have the same affect as 1° change at input 1 in relation to the output pressure.

See Page 7 for method of calculating.

In cases where the transmitter is more than 200 feet from the receiver-controller or where the input signal is the output pressure of another controller or thermostat except TK-5000 series, the restriction for that input must be removed and the passages must be blocked. To block these passages, proceed as follows. Refer to Figure 2.

1. Remove restrictor cover plate screws.
2. Remove restrictor cover plate.
3. Remove restrictor plate and gaskets.
4. Install blocking gasket packaged with the receiver-controller.
5. Install cover plate and secure blocking gasket and cover plate with two screws.

If additional gaskets are required, order under Part Number PNC-42. These gaskets have a Red edge which will be visible above the top of the cover plate to indicate the restriction has been removed.

CALIBRATION

1. Set percent proportional band and percent authority adjustment and determining percent authority setting.
2. Select and apply proper set point decal provided with the receiver-controller.

   NOTE: The scale must match the range of the primary (input) transmitter.

3. Connect into transmitter No. 1 and 2 lines calibration box as shown below:

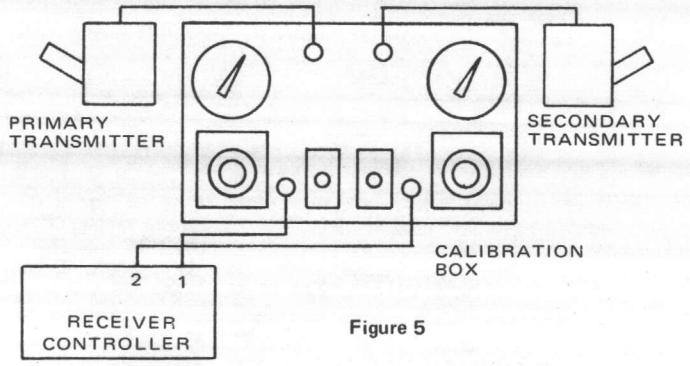

Figure 5

4. Position toggle switches to up (trans) position.
5. After making sure the transmitters are sensing a stable condition (temperature, humidity, pressure) measure the condition at the transmitter with an accurate measuring device such as thermometer, etc.
6. Note reading on calibration box guages for specific range of transmitter used, compared to condition measured at the transmitter.
7. If readings are within ±15°F on 200° span transmitter, ±4°F on a 50° span transmitter, ±6% RH on an 80% RH span transmitter or .15° H_2O on the differential transmitter proceed as follows. If readings are not within these limits on all transmitters except the differential pressure transmitter, replace the transmitter. When installing the new transmitter refer to the transmitter general instructions and make sure it is installed properly.
8. Adjust all permanent receiver guages to match the condition as measured with the accurate measuring device such as thermometer, etc. (Not calibration box gauge.)
9. Position toggle switches to down (calib) position.

TO CHECK PERCENT PROPORTIONAL BAND:

10. Single Input Units & Dual Input

A. Adjust the signal to Input No. 1 until 3 psig is read on the branch gauge. Note reading on the No. 1 test gauge.
B. Adjust the signal to Input No. 1 until the branch gauge indicates 13 psig. Note reading on the No. 1 test gauge.
C. Determine difference between step A & B.
D. If this difference is not correct for desired throttling range, adjust the percent proportional band adjustor in the proper direction and return to step A in calibration above.

FOR SINGLE INPUT UNITS ONLY –

11. Adjust the signal to input No. 1 until the permanent gauge indicates the desired temperature. In units with remote set point the pressure to input "A" must be 9 psig.

12. Rotate set point knob until 8 psig ±1 psig is obtained on the branch gauge.

13. Slide the set point scale until the desired temperature is read at the set point indicator.

    The single input unit is now calibrated; remove calibration box and reconnect transmitter.

FOR DUAL INPUT UNITS the Percent Authority must also be checked. To explain this we will use the following for an example:

Given	OA	O	70	Secondary Transmitter (2)
	HW	180	100	Primary Transmitter (1)

11. Determine percent authority setting, and adjust authority adjustment.

DETERMINING PERCENT AUTHORITY SETTING

The percent authority adjustment on the RKS 3002 and RKS 4002 receiver-controllers is similar to the reset of a submaster thermostat as used in a master-submaster system. However, the authority setting cannot be determined in the same manner due to the difference in spans of the transmitters. The calculation must be made using the formula on page six.

Example: Hot Water Reset from Outdoor Air

Refer to Figure 8, example of transmitter relationship chart, F-14245. Plot the limits as follows:

Given:	Outdoor Air	Hot Water
	–10F	180F
	60F	100F

Transmitters Range
O.A., –40 to +160F (200F° Span)
H. W., 40 to 240F (200F° Span)
Desired TR, 10F°

A. Reading on T-1 scale of Figure 8, plot point at upper limit of H.W. (180F) (Point 1) and lower limits of O.A. on T-2. (–10F). Point 1 becomes 180F (T-1) at –10F (T-2).

   Next, plot Point 2 at lower limit of H.W. (100F), and upper limit of O.A. on T-1 (60F). Point 2 becomes 100F (T-1) at 60F (T-2).

B. Draw vertical lines from Points 1 and 2 down to horizontal T-2 scale. Designate difference between two vertical lines as "B" (70F°).

C. Draw horizontal lines from Points 1 and 2 across to vertical T-1 scale. Designate difference between two horizontal lines as "A" (80F°).

D. Formula -

$$\% \text{ Authority Setting} - \frac{A}{B} \times K$$

A and B are as plotted on Chart F-14245

$$K = \frac{\text{Span of (O.A. Transmitter) T-2}}{\text{Span of (H.W. Transmitter) T-1}} \times 100$$

For above example

$$\% \text{ Authority Setting} = \frac{80^{\circ}F}{70^{\circ}F} \times 100$$

$$\% \text{ Authority Setting} = 1.14 \times 100$$

$$\% \text{ Authority Setting} = 114\%$$

Example: Room and Discharge Control

The calculations and plottings are the same for this system as for H.W. reset.

In this case the room transmitter is the primary transmitter and is connected to Input No. 1.

"K" FACTORS FOR CALCULATING PERCENT AUTHORITY

Input 1 Transmitter Span	Input 2 Transmitter Span	K Factor
50 F	50 F	100
50 F	200 F	400
50 F	80% RH	160
50 F	2" Water	4
200 F	50 F	25
200 F	200 F	100
200 F	80% RH	40
200 F	2" Water	1
80% RH	50 F	62.5
80% RH	200 F	250
80% RH	80% RH	100
80% RH	2" Water	2.5
2" Water	50 F	2,500
2" Water	200 F	10,000
2" Water	80% RH	4,000
2" Water	2" Water	100

12. CHECK PERCENT AUTHORITY

TO CHECK PERCENT AUTHORITY:

A. Adjust signal to Input 2 to equal Max. Temp. (in example 70°)
B. Adjust signal to Input 1 to equal Min. Temp. desired (in example 100°)
C. Adjust set point knob until a branch pressure of between 5 and 10 psig is read on the branch line gauge.
D. Note branch pressure reading.
E. Lower the signal to input No. 2 until the test gauge indicates the lowest desired temperature (in example 0°F).
F. Raise the signal to Input No. 1 until the branch gauge agains reads the same as it did in Step D.
G. Note the reading on the No. 1 test gauge. If it is not correct, (in example 180°) readjust the percent authority slider in the appropriate direction (Increase setting if reading is too much, decrease setting if reading is too little) and return to step A.

13. Adjust the signal to Input No. 1 until the permanent gauge indicates the min. desired temperature at input No. 1 in example 100°.

14. Adjust the signal to input No. 2 until the permanent gauge indicates the maximum desired temperature at input No. 2 in example 70°.

15. On units with remote set point adjustment, make certain that the signal from the set point adjustor is 9 psig.

16. Rotate set point knob until 8 psi ± 1 psi is obtained on branch pressure gauge.

17. Slide the set point scale until the minimum desired temperature (in example 100°F) is read at the set point indicator.

The unit is now calibrated: remove calibration box and reconnect transmitters.

NOTE: If system requires changing Percent Proportional Band unit, setpoint must be calibrated.

Band unit set point must be calibrated.

DIRECTION OF SET POINT KNOB ROTATION TO OBTAIN 8 PSIG BRANCH LINE PRESSURE.

Action	Initial Branch Pressure Below 8 PSI	Initial Branch Pressure Above 8 PSI
DA	CCW	CW
RA	CW	CCW

DIAL KNOB HAS 10 EQUAL DIVISIONS.

Transmitter Span Input 1	Each Division Represents
50°F	.25°F
200°F	1°F
80% RH	.4% RH
2" H_2O	.01" H_2O

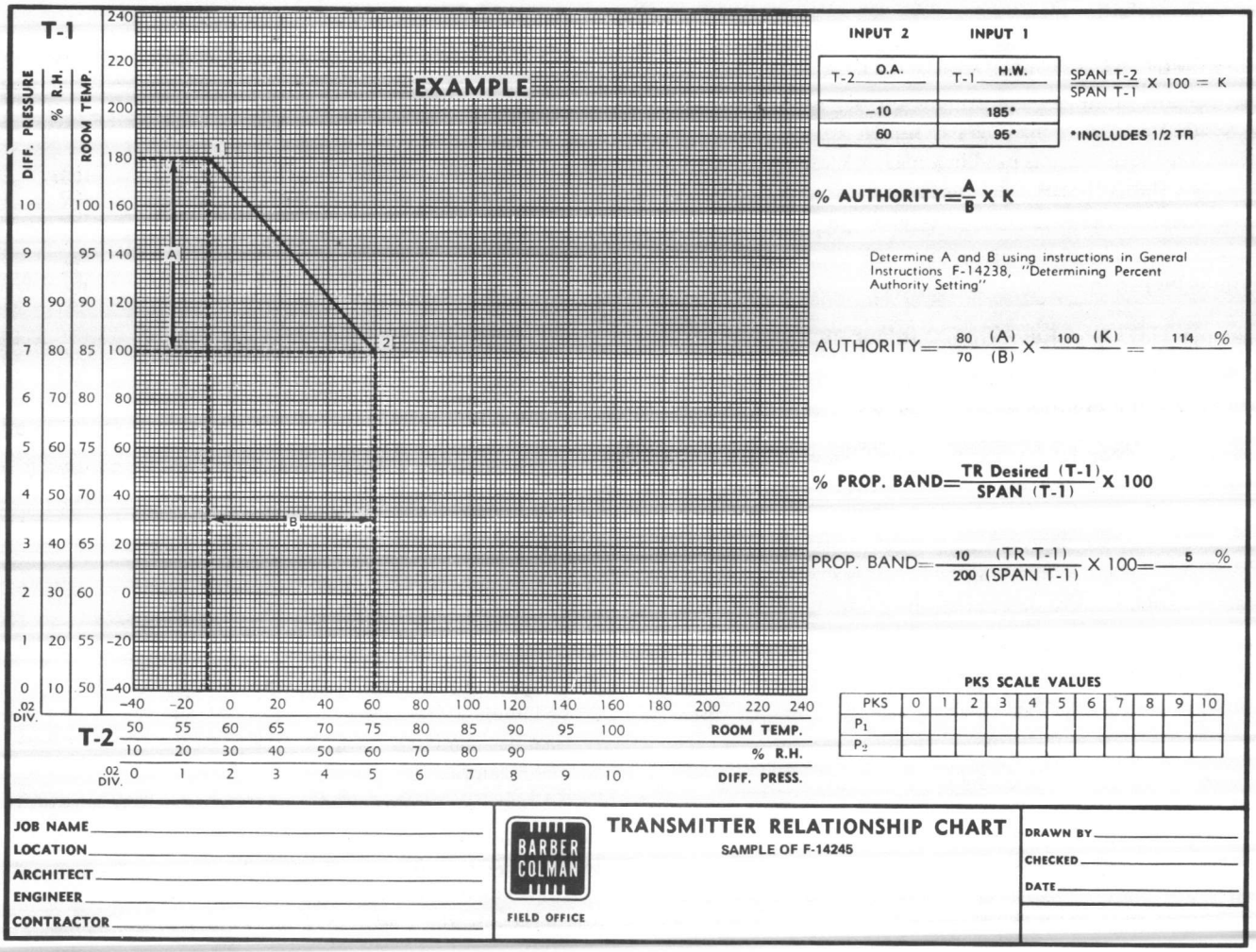

Figure 8

TYPICAL PIPING SINGLE INPUT RECEIVER CONTROLLER

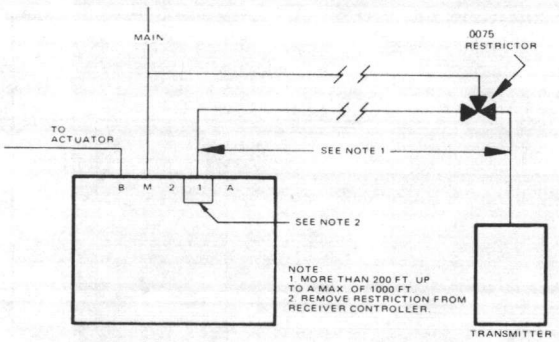

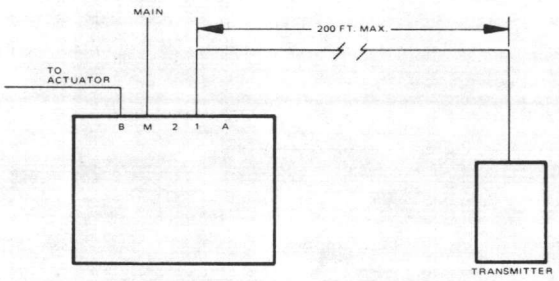

TYPICAL PIPING DUAL INPUT RECEIVER CONTROLLER

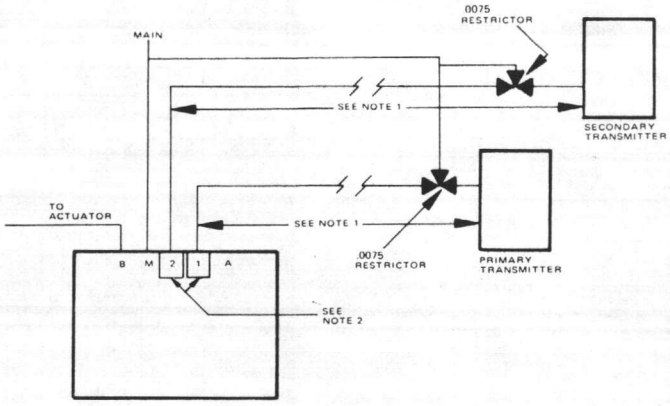

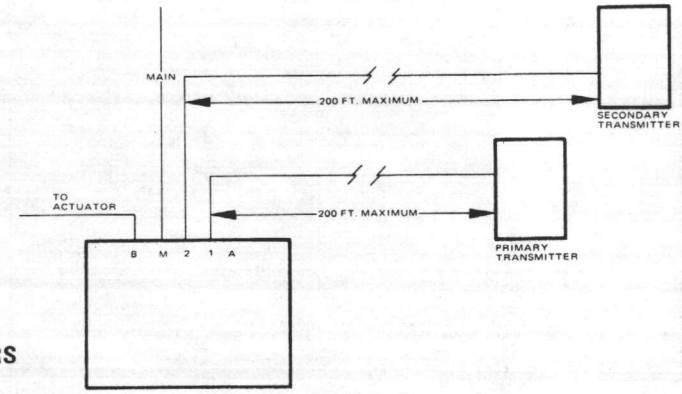

USE OF CONTROLLERS WITH RECEIVER–CONTROLLERS

There are occasions when it is desirable to use a controller such as a room thermostat, remote bulb thermostat, or receiver controller to provide the signal to the input chamber of a dual input receiver controller. A typical example of this is room and discharge control. These types of applications are acceptable as long as indication is not required and proper calculations are made for the authority adjustment setting.

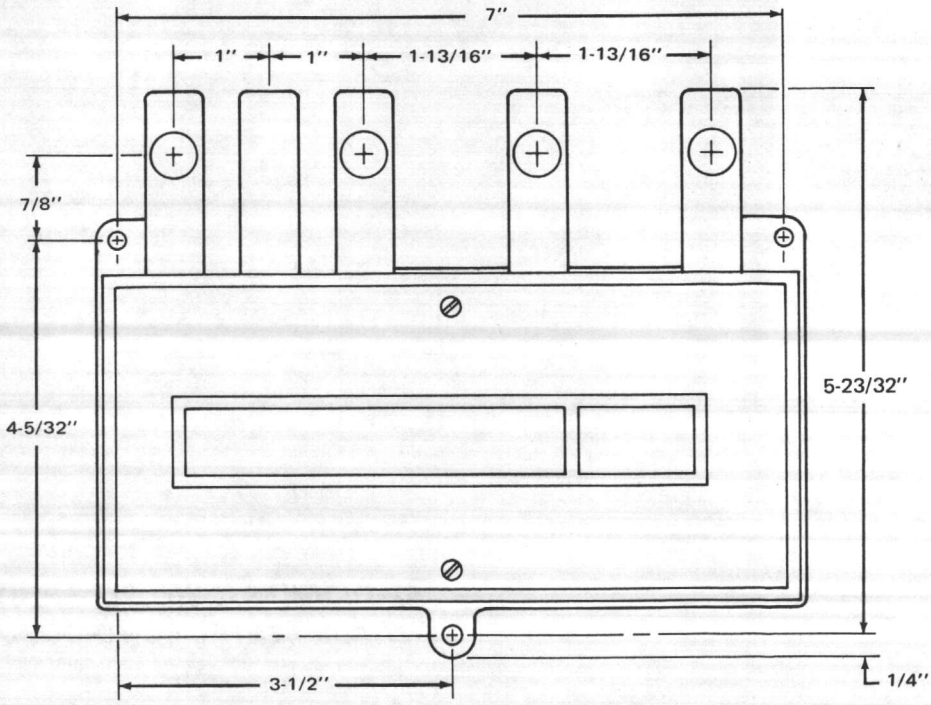

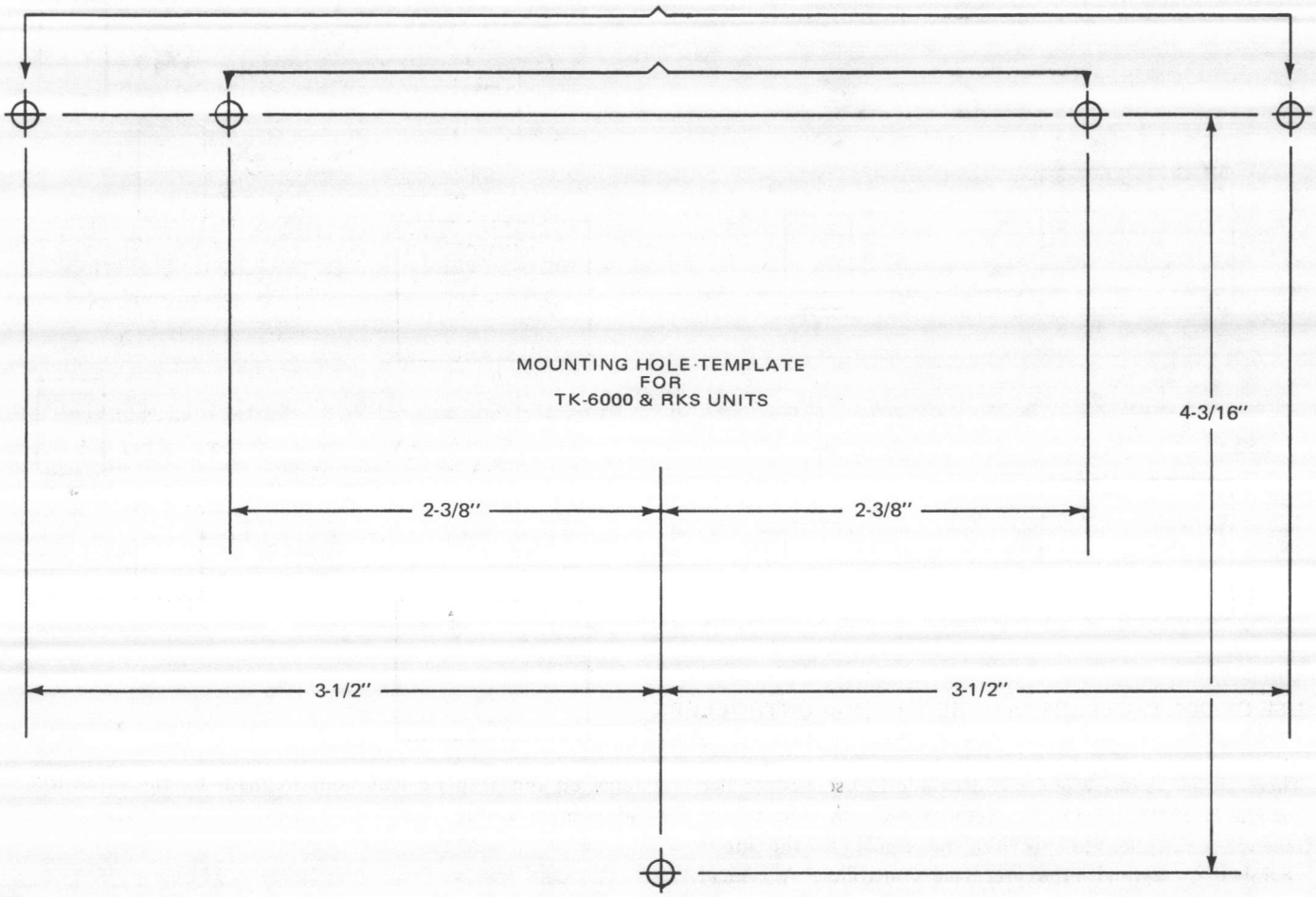

Barber-Colman Company
ENVIRONMENTAL CONTROLS DIVISION

1354 Clifford Avenue
P.O. Box 2940
Loves Park, IL U.S.A. 61132-2940

TTR, TTD, TS-6

General Instructions

Models TKS-2031, 4014, 4017, 8033, 9014, 9017

Rod and Tube and Remote Bulb Transmitters

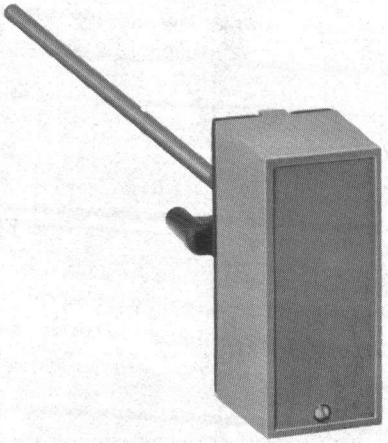

Rod and Tube Transmitter

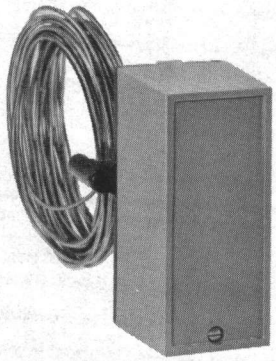

Averaging Bulb Transmitter

DEVICE INFORMATION

These transmitters are used with Barber-Colman RKS receiver-controllers for control of air or water temperatures. They may be used in conjunction with AKS receiver gauges for temperature indication only.

Pre-Installation

For list of parts required, see **INSTALLATION** Procedure for mounting and piping.

Before installation, make a visual inspection of the carton and transmitter for signs of damage.

INSTALLATION

Requirements

Air Consumption: 48 scim for sizing air compressor.

Supply Air Pressure: (when used for indication only): 18 psig.

Air Capacity: 36 scim for sizing air mains.

Air Connection: 1/8-inch FNPT.

The transmitter may be mounted in any position; however, preferred mounting is with the air connection at the bottom with the unit in a vertical position.

Procedure

MOUNTING OF ELEMENT (Figure 1): The 9-1/4-inch rod and tube transmitter is furnished with a mounting bracket threaded for use with standard AT-201 or AT-203 well. Attach the mounting bracket to the well, then insert transmitter element and attach transmitter to bracket with screws provided.

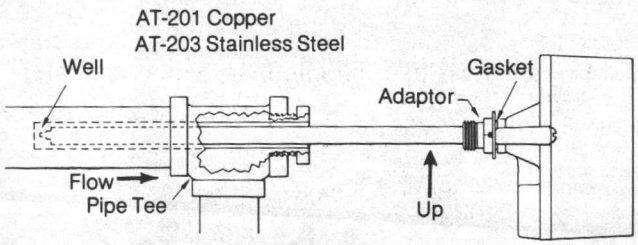

Figure 1

TKS-8014
TKS-8033
Transmitter

CAUTION

Well must be straight before inserting transmitter and be located in pipe tee as shown at least 15 feet from pump discharge or intake.

PERFORMANCE

Device	Part No.	Action	Mounting	Max. Safe Temp. At Element	Range (Non-Adjustable)	Output Signal (psig)
Straight Bulb	TKS-2031	DA	Wall or Duct	93°C (200°F)	-40 to 71°C (-40 to 160°F)	3–15
Averaging Bulb	TKS-4014	DA	Duct	149°C (300°F)	-18 to 38°C (0 to 100°F)	3–15
Averaging Bulb	TKS-4017	DA	Duct	149°C (300°F)	10 to 66°C (50 to 150°F)	3–15
Rod & Tube	TKS-8014	DA	Immersion	149°C (300°F)	-18 to 38°C (0 to 100°F)	3–15
Rod & Tube	TKS-8033	DA	Immersion	149°C (300°F)	4 to 116°C (40 to 240°F)	3–15
Rod & Tube	TKS-9014	DA	Duct	149°C (300°F)	-18 to 38°C (0 to 100°F)	3–15
Rod & Tube	TKS-9017	DA	Duct	149°C (300°F)	10 to 66°C (50 to 150°F)	3–15

DA = Direct-Acting

LITHO IN U.S.A.

F-14240-5

AIR DUCT MOUNTING (Figure 2): Drill three holes in the duct and fasten the transmitter to the duct with two screws provided. Use Figure 2 as a template.

Note: Locate transmitter as far from the fan as possible.

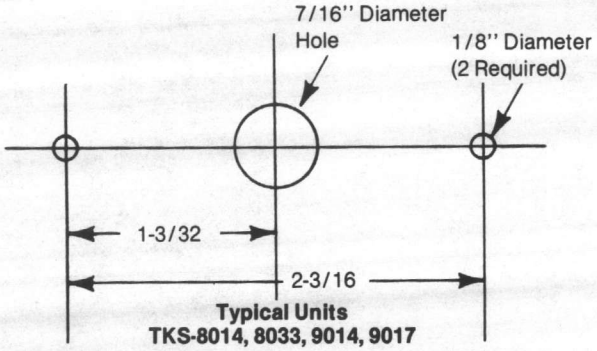

Figure 2. Full Scale Template for Drilling Rod/Tube Unit Holes

AIR DUCT MOUNTING — TKS-4014, TKS-4017 (Figure 3): Transmitters equipped with 5/64-inch x 24-foot averaging bulb include a mounting cork shown in Figure 3. Drill holes as shown in Figure 4. Mount transmitter with two screws provided. Thread element through 7/8-inch hole and apply cork to it. Secure element in duct, to duct supports, or use a length of hard drawn copper. Attach copper to duct, and attach element to copper with a wire tie. Insert cork into hole. An alternate method is shown in Figures 5 and 6.

CAUTION

Do not bend bulb in less than 3-inch diameter circle.

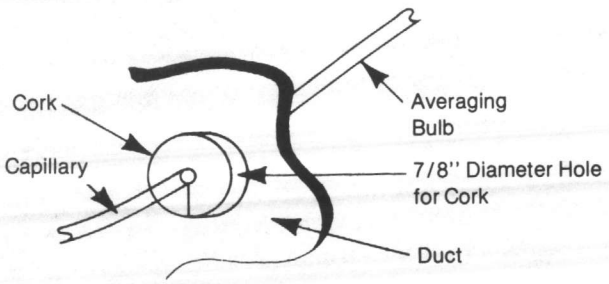

Figure 3. Installing Averaging Bulb Through Duct (See Figure 4)

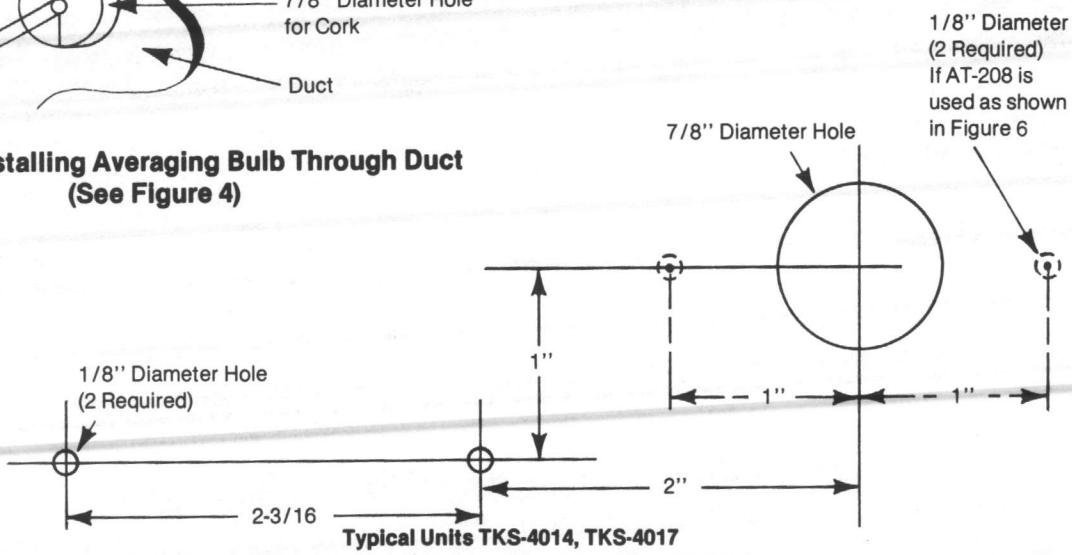

Figure 4. Full Scale Template for Drilling Averaging Unit Holes

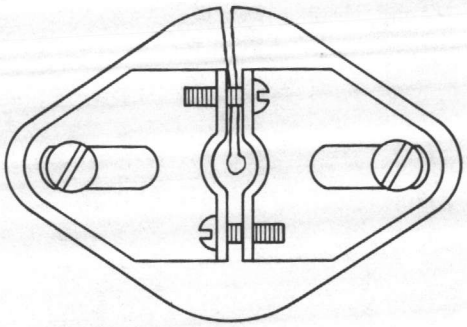

Figure 5. AT-208 Bracket and Gasket Assembly Used in Place of Cork Supplied with Unit

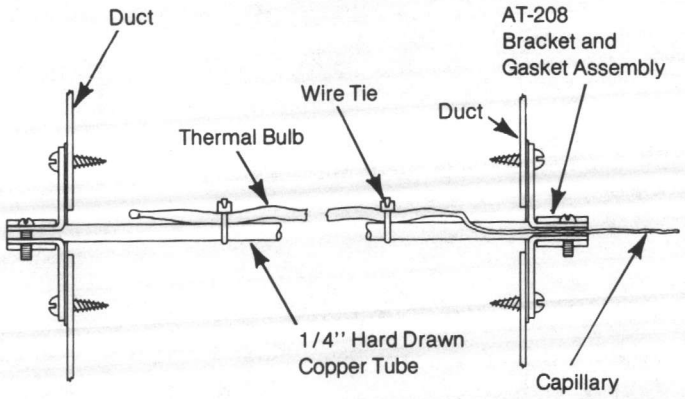

Note: An access panel is required to allow for tying bulb to copper after it is installed in the duct.

Figure 6. Mounting Averaging Bulb Through Duct

OUTDOOR MOUNTING (Figure 7): A bulb clip and shield (AT-211) are available for mounting the bulb to the outside wall or surface. After mounting the bulb with the clip, place the shield directly over the bulb and fasten the shield to the wall surface. Transmitter is located inside of building on wall or duct. Typical unit is TKS-2031, supplied with 3-foot capillary.

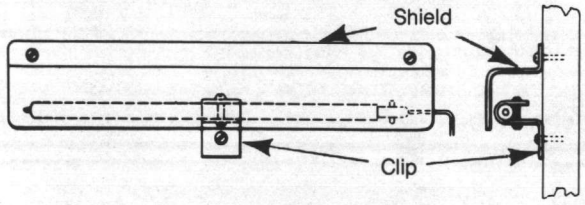

CAUTION
Do not crimp bulb with clamp.

Figure 7. Outdoor Wall Mounting of Element With AT-211 Bulb Shield

ADJUSTMENTS: All transmitters are factory set for the range indicated in the Performance table. No attempt should be made to readjust units in the field.

PIPING: When used in conjunction with a receiver-controller with less than 200 feet of 1/4-inch OD tubing between the receiver-controller and the transmitter, the air supply to the transmitter is through the receiver-controller as shown in Figure 8.

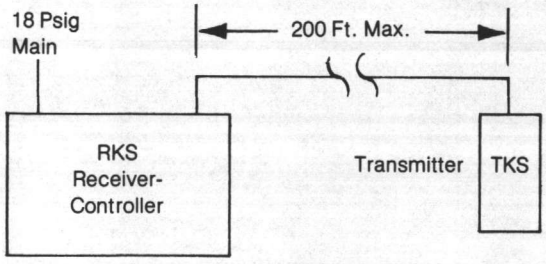

Figure 8

When the distance between the receiver-controller and the transmitter is over 200 feet but less than 1000 feet maximum recommended (Figure 9), it is necessary to provide a main air supply at the transmitter location and remove the built-in restrictor from the receiver-controller input.

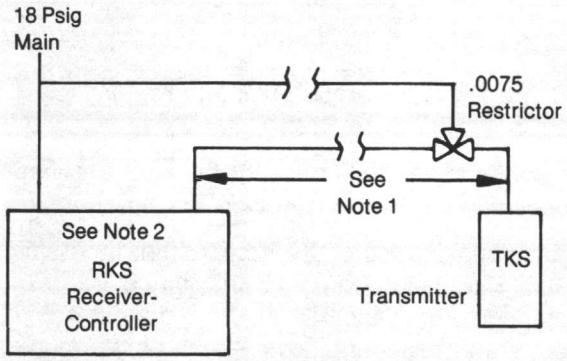

Note: 1. More than **200** ft. up to a max. of **1000** ft.
2. Remove restriction from receiver-controller.

Figure 9

When the transmitter is used in conjunction with a receiver gauge for indication only, it is necessary to supply an air main to each transmitter through an .0075 restrictor (Figures 10 and 11).

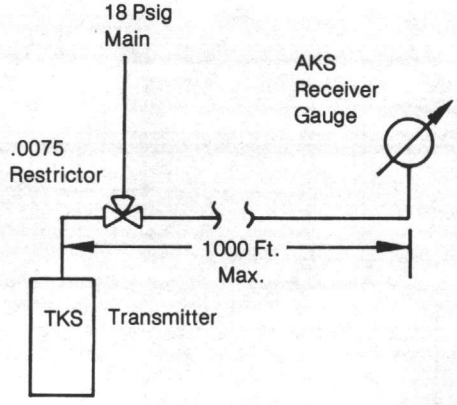

Figure 10

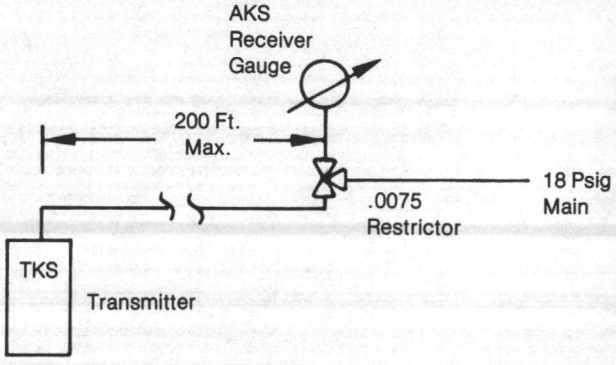

Figure 11

Note: It is recommended that field tubing termination to the transmitter be made with at least 6 inches of 1/4-inch O.D. plastic tube to avoid the possibility of forces from the tubing affecting the transmitter.

CHECKOUT

1. Connect the calibration box into No. 1 and 2 lines as shown in Figure 12 and 13.
2. Move toggle switches to the up (transmitter) position.
3. After making sure the transmitter is sensing a stable condition (temperature, humidity, pressure) measure the condition at the transmitter with an accurate measuring device such as thermometer, etc.
4. Note reading on calibration box gauges for specific ranges of transmitter used, compared to condition measured at the transmitter. Readings should be within ±15°F. If readings are not within these limits, replace the transmitter.

RUN/ADJUST

No adjustments are required on the transmitter.

MAINTENANCE

The unit requires no maintenance under normal conditions.

REPAIR

Field repair is not recommended. If the system is not operating correctly, and the reason is traced to the transmitter, it should be replaced.

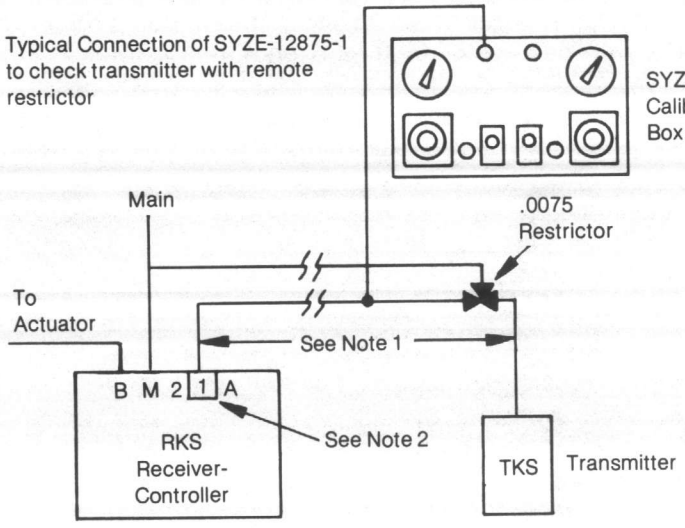

Note: 1. More than **200** ft. up to a max. of **1000** ft.
2. Remove restriction from receiver-controller.

Figure 12

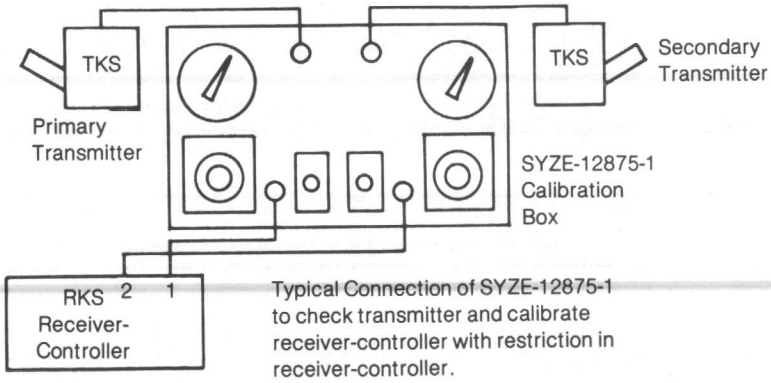

Typical Connection of SYZE-12875-1 to check transmitter and calibrate receiver-controller with restriction in receiver-controller.

Figure 13

Barber-Colman Company
ENVIRONMENTAL CONTROLS DIVISION
1354 Clifford Avenue
P.O. Box 2940
Loves Park, IL U.S.A. 61132-2940

LITHO IN U.S.A.

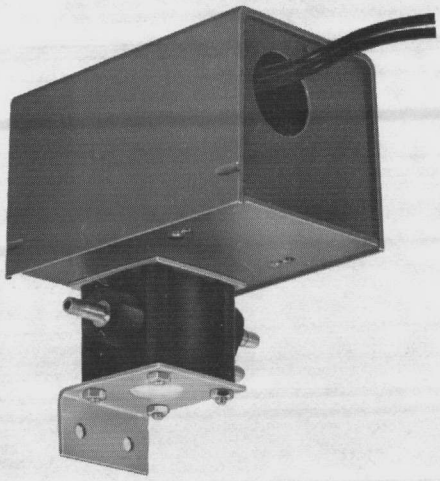

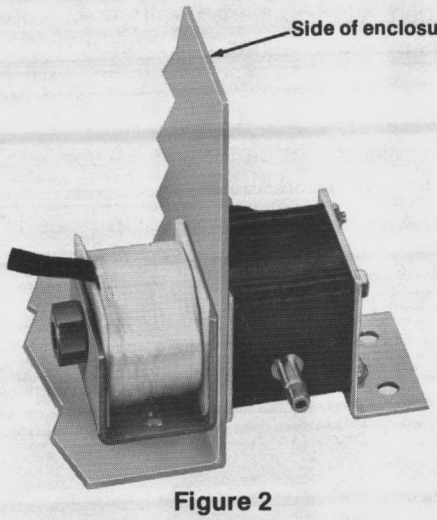

Figure 2

DEVICE INFORMATION

Identification

These units are identified by the part number, which is found on the outside of the carton and on the cover of the unit.

For use in applications where an electrical circuit is used to switch a pneumatic circuit. They may be used to direct supply air to a pneumatic circuit when the coil is energized or de-energized depending on the air connections used. Typical applications include:

1. Switching main air on and off to pneumatic controllers.
2. Switching the branch (output) of a pneumatic controller on and off to a controlled device such as an actuator.

Pre-Installation

Unit consists of a (UL approved plastic body) incorporating three barbed brass connections for 1/4 in. OD plastic tubing. The electrical coil is enclosed in a corrosion resistant metal housing.

INSTALLATION

Requirements

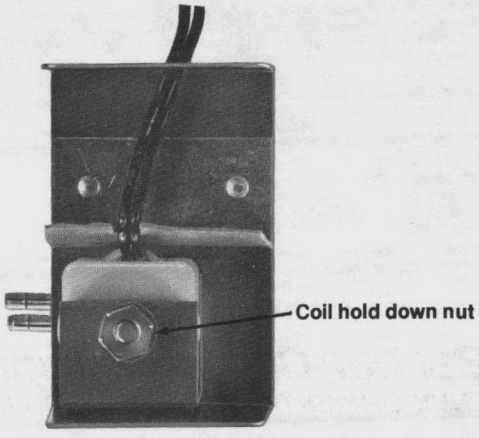

Figure 1

Unit is designed for mounting in three different methods.

1. **Remote mounting:** Unit may be fastened to wall or duct with 2 No. 8 sheet metal screws or equivalent. This method requires the use of the enclosure on the coil. An integral mounting plate is provided or unit may be mounted to a PNC-112-1 auxiliary mounting plate.
2. **Inside cabinet mounting:** Unit may be fastened to sub-panel of cabinet with 2 No. 8 sheet metal screws. An alternate method requires track mounting in SYZE-567 mounting track. This method requires the use of the PNC-112-1 auxiliary mounting plate. When mounting inside of an approved electrical enclosure, the wiring enclosure of the solenoid may be removed to conserve panel space.
3. **Inside-Outside mounting:** Unit may be installed with electrical portion inside of an approved electrical enclosure and the valve body outside of the enclosure. This type of mounting requires a 9/16 inch, 14.27 mm dia. hole in the enclosure. Enclosure must be of 18 to 20 gage thickness (.0478 in. to .0359 inch, 1.21 mm to .91 mm).
   a. Remove cover.
   b. Refer to Fig. 1, remove coil hold down nut.
   c. Remove coil and lower half of solenoid enclosure.
   d. Install plunger tube thru 9/16 inch, 14.27 mm hole in electrical enclosure. (See Fig. 2).
   e. Re-install coil and coil hold down nut, tighten nut.

CAUTION:

Do not over-tighten as this may cause distortion of plunger tube or damage coil.

Performance

Ambient temperature: 40°F min., 130°F max.
Fluid (air) temperature: 40°F min., 130°F max.
Power consumption (when energized): 7 watts.
Maximum inlet pressure: 30 psig.
Flow capacity (air): .5 scfm @ 15 psig. supply
1 psig. drop.

Wiring

Make all electrical connections in accordance with national and local electrical codes. A hole is provided in the metal enclosure for connection of 1/2 inch conduit. Enclosure may be used as a wiring compartment. Units are provided with 18″ leads on the coil. A special 120 volt unit is available with a 3 ft., three wire power cord. Specify AL-110-201.

REPAIR

The only replacement part offered is the solenoid coil. Order by following part numbers.

Solenoid Part No.	Voltage (AC)	Coil Part No.
AL-100	24	PNR-300-010
AL-110	120	PNR-300-020
AL-120	208	PNR-300-030
AL-125	240	PNR-300-040
AL-130	277	PNR-300-050
AL-140	480	PNR-300-060

Barber-Colman Company
ENVIRONMENTAL CONTROLS DIVISION
1300 Rock Street, Rockford, Illinois, U.S.A., 61101

F-15875 BK

LITHO IN U.S.A.

CONTROLS

GENERAL INSTRUCTIONS

Pneumatic Relays

CR-7

AK-50301, AK-50401

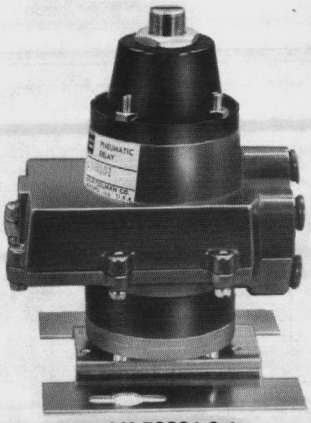

AK-50301-0-1

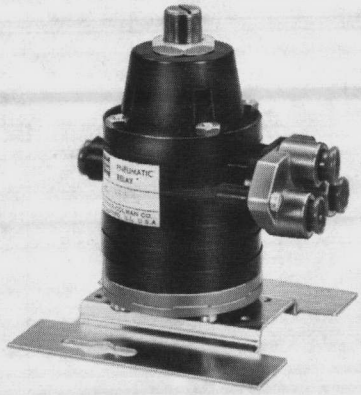

AK-50401-0-1

AK-50301 – This relay is a snap-acting, three way switching relay. It is used to switch either of two input lines to a common output or to stop the air signal from a controller output or main air line and bleed the air from a controlled device. The pilot signal may be either two position or proportional.

ADJUSTMENTS

To adjust the AK-50301 proceed as follows:

1. Determine the pilot pressure at which it is desired to have the N.C. (3) port connected to the Com. (4) port, on an increase in pilot pressure.
2. Determine the pilot pressure at which it is desired to have the N.O. (2) port connected to the Com. (4) port on a decrease in pilot pressure.

NOTE

The difference between the pressures in Step 1 and Step 2 must be between 1.5 and 6.5 psig.

3. Referring to Figure 1, connect a pressure regulator in the pilot line and connect output to port 1.
4. Provide full supply pressure to the pressure regulator.
5. Adjust the signal to port 3 to its maximum value.
6. Adjust the signal to port 2 to its minimum value.
7. Adjust the pressure regulator to the value determined in Step 1.
8. If the pressure at port 4 equals that applied to port 2, adjust the setpoint screw out slowly until the unit switches and the pressure at port 4 equals that applied to port 3. If the pressure at port 4 equals that applied to port 3, adjust the setpoint in until the pressure at port 4 equals that applied to port 2, then adjust the setpoint screw out slowly until the unit switches back and the pressure at port 4 again equal that applied to port 3.

NOTE

Setpoint adjustable from 3 to 20 psig.

9. Gradually lower the pressure to port 1 (regulator) and note the pressure at which the port 4 pressure changes to equal that applied to port 2. Note the pressure should equal that determined in Step 2. If the pressure is too high, the differential needs to be increased. If the pressure is too low, the differential needs to be decreased. Raise the pressure to port 1 back to that set in Step 7.
10. Adjust the differential screw, clockwise to increase, counterclockwise to decrease differential, approximately 1 turn for each 1 psig change desired.
11. Repeat Steps 8 through 10 until the unit performs as desired.

NOTE

The minimum differential is 1.5 psig, maximum is 6.5 psig.

Air Connection Code			
Port 1	**Port 2**	**Port 3**	**Port 4**
Pilot	Normally Open	Normally Closed	Common

TYPICAL CHECKOUT PIPING

AK-50301

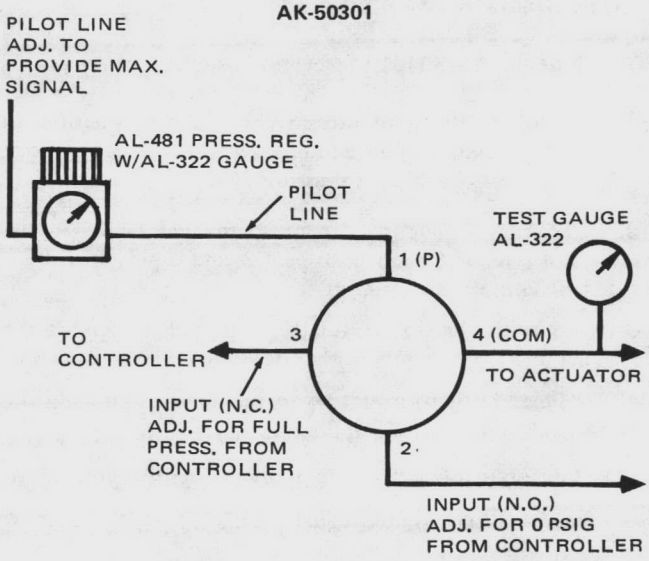

Figure 1

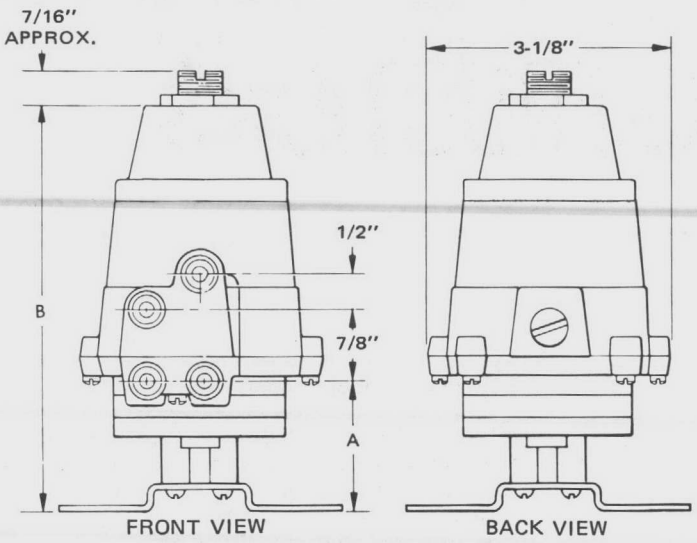

DIMENSIONS AK-50301-0-1

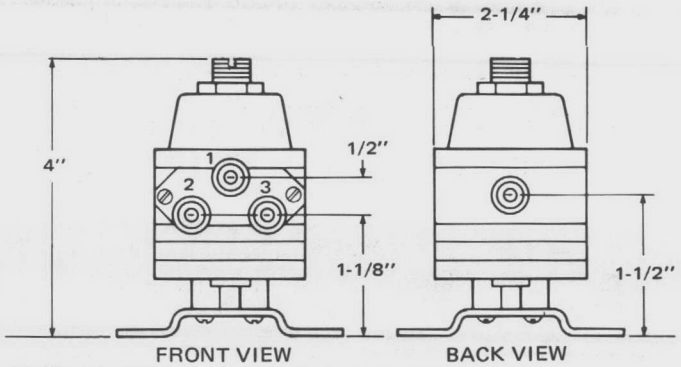

DIMENSIONS AK-50401-0-1

AK-50401 — This relay is a non-snap acting three way switching relay. It is used to switch either of two inputs to a common output or to stop the air signal from a controller output or main air line and bleed the air from a controlled device. The pilot signal MUST be a two position signal change of at least 3 psig.

ADJUSTMENTS

To adjust the AK-50401 proceed as follows:

1. Determine the pilot pressure at which it is desired to have the N.C. (1) port connected to the Com. (4) port, on an increase in pilot pressure.
2. Referring to Figure 2, connect manual switch in the pilot line, and connect to port 2, and supply it with air from a pressure regulator.
3. Adjust the pressure regulator to provide a signal to the manual switch equal to that determined in Step 1.
4. Adjust signal to port 1 to its maximum value and the signal to port 2 to its minimum value.
5. Position manual switch to apply pressure to port 2.
6. Port 4 output should equal port 1 input. If not adjust setpoint screw out until it does.
7. Adjust setpoint screw in slowly until port 4 output equals port 1 input.

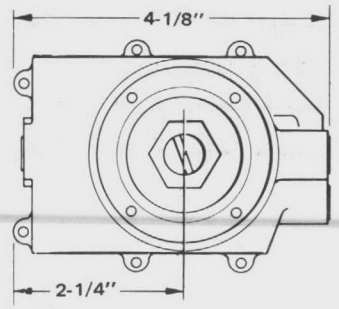

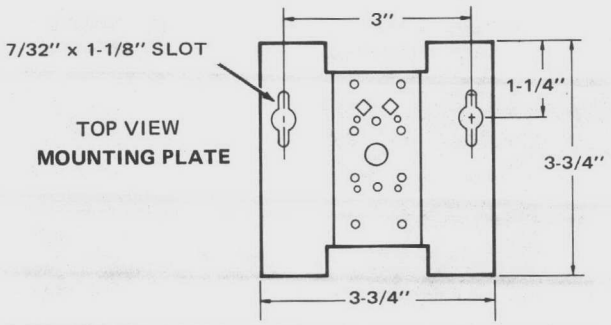

NOTE: Mounting Plate Dimensions Typical for Relays AK-50301 & AK-50401.

8. Position manual switch to exhaust the air from port 2. Port 4 output should equal port 3 input.
9. Position manual switch to apply pressure to port 2, port 4 output should equal port 1 input. If not repeat Steps 7 through 9 until the desired results are obtained.

NOTE

Setpoint is adjustable from 1.5 to 18.5 psig.

Installation — The AK-50301 and AK-50401 are provided with a mounting plate which can be either mounted to a panel or wall with screws provided, or mounted in SYZE-567 track. Panel space required is 4 inches wide by 5-1/2 inches high by 6 inches deep. Air connections are: 1/8 FNPT.

Air Connection Code			
Port 1	**Port 2**	**Port 3**	**Port 4**
N.C.	Pilot	N.O.	Com.

TYPICAL CHECKOUT PIPING
AK-50401

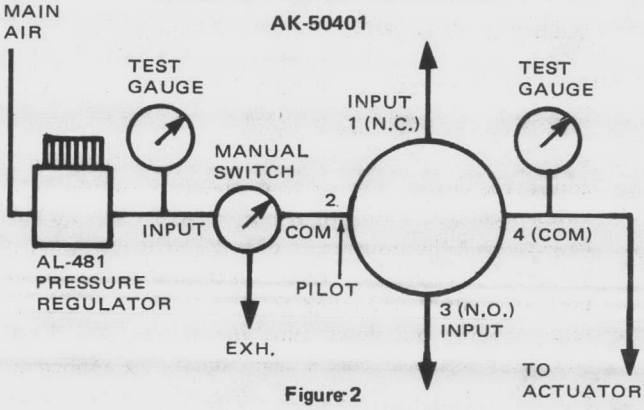

Figure 2

AD-8705
AD-8706

Relay Modules for CP-8173-064

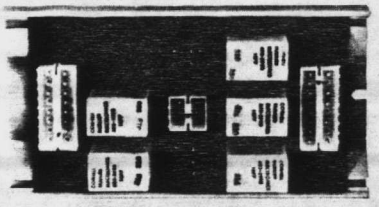

These relay modules are used with CP-8173-064 Digi-Dap logic center. The AD-8705 has five SPDT relays. Four are used for staged cooling and the fifth is used with the THC-2 enthalpy controller for override of the mixed air control. The AD-8706 has six SPDT relays which are used for staged heating. Relays have quick connect plug receptacles for both input and output. Order wiring harnesses separately. Units are mounted to a section of track for panel mounting. **Ambient limits:** 0 to 135°F. **Dimensions:** 4" high × 7-1/2" wide × 1-3/4" deep.

Contact Rating	24 Vac	120 Vac	240 Vac
Amps (continuous)	1	1	.5
Amps (inrush)	10	10	5
Pilot Duty (sealed) (VA)	25	125	125
Pilot Duty (inrush) (VA)	250	1250	1250

ACCESSORIES:

AD-1713-564-4 36" wiring harness, input to AD-8705 and AD-8706

AD-1720-200-2 36" wiring harness, output from AD-8705 and AD-8706 **Note:** AD-1720-302-2 is also required.

AD-1720-302-2 36" wiring harness, output from AD-8705 and AD-8706; **Note:** AD-1720-200-2 is also required.

AD-8912

Enclosures

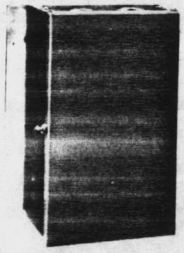

WHERE APPLICABLE ?

S.C.

These metal enclosures are used for remote mounting certain electronic devices.

Part Number	Description	For Use With
AD-8912	12" Enclosure	AD-8101, AD-8201, ASP-301, CC-8101, CC-8102, CC-8103, CC-8111 CN-8101, CP-8102 , TSP-8101

AD-8951

Mounting Plate & Track Adaptor

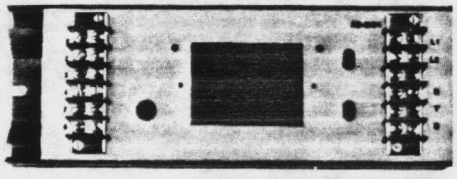

Mounting plate and track adaptor for use with TP-8101 and the CP-8301. Used to adapt TP-8101 and the CP-8301 for panel installations.

SPC

General Instructions

PP-3013, PP-3113 Pressure Controller

A bleed type device for proportional pressure control of static or differential pressures. It is used with pneumatic actuators to control air flow or pressures at terminal units such as mixing boxes.

Construction Rugged metal housing incorporating a sensitive diaphragm.
Supply Air Pressure 30 psig maximum; 15 or 20 psig nominal.
Air Connections Barbed post for 1/4" I.D. tube on high and low taps and 1/4" O.D. tube on output.
Air Consumption For compressor sizing .016 standard cubic feet per minute (scfm) for 15 psig supply and .024 scfm for 20 psig supply.
Air Capacity For sizing air mains 36 standard cubic inches per minute (scim) for 15 psig supply and 50 scim for 20 psig supply.
Maximum Safe Static Pressure 12" W.C.
Dimensions 5-3/4" (146 mm) high × 5" (127 mm) wide × 5" (127 mm) deep.

OPTIONS None

ACCESSORIES

AP-301 Duct static pressure sensing tip used in areas with air turbulence.
AP-305 Duct static pressure sensing tip used in areas with very low actuating pressure.
AT-532-111-1-01 .0075 tee restrictor for 5/32" plastic tubing.
AT-532-222-1-01 .0075 tee restrictor for 1/4" plastic tubing.
AT-532-098-1-01 .0075 restrictor (white)
Tool-95 Pneumatic calibration tool kit.

Part Number	Throttling Range	Setpoint**	Action*
PP-3013	.04" W.C. per 10 psig Change	Adj. .05 to .9"† W.C. Differential	DA
PP-3113			RA

*Direct Acting (DA) — Increase in differential pressure produces increase in output pressure.
Reverse Acting (RA) — Increase in differential pressure produces decrease in output pressure.
**Unit does not have setpoint scale.
†Factory set .5" W.C. for 8±2 psig output.

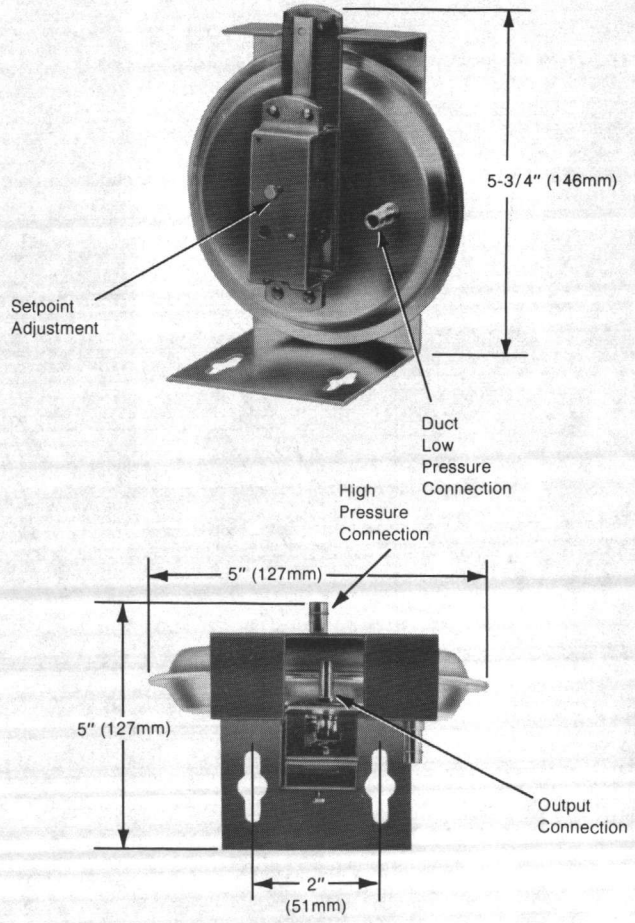

INSTALLATION

Controller **must** be mounted with diaphragm in horizontal plane with "high" pressure tap on top. See Figure 5 for typical mounting arrangement. Keyhole slots are provided for No. 10 sheet metal screws.

ADJUSTMENTS

Pressure controllers are shipped from the factory, calibrated to provide an 8 ± 2 psig control line pressure when the control point is equal to the setpoint. The setpoint is factory set at .5" of water. The throttling range is fixed at .04" W.C. per 10 psig control line pressure change.

SYSTEM SET-UP

Refer to Figures 1 through 4 for typical piping arrangements.

1. Adjust supply air pressure to the controller, i.e., 15 psig.
2. Connect a test magnehelic gauge across the pressure taps if a permanent is not installed.
3. Reading the differential pressure on the magnehelic, rotate the setpoint (CW to increase differential) until proper differential is obtained.

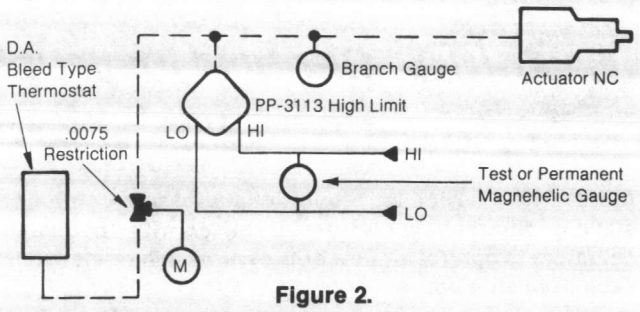

Figure 2.

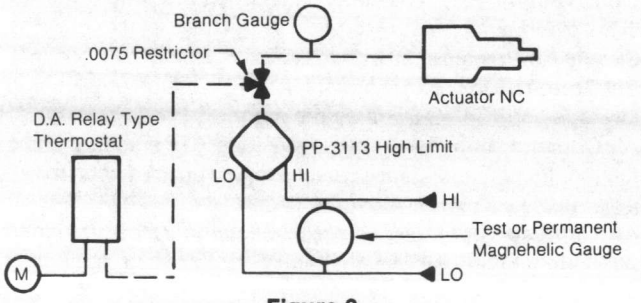

Figure 3.

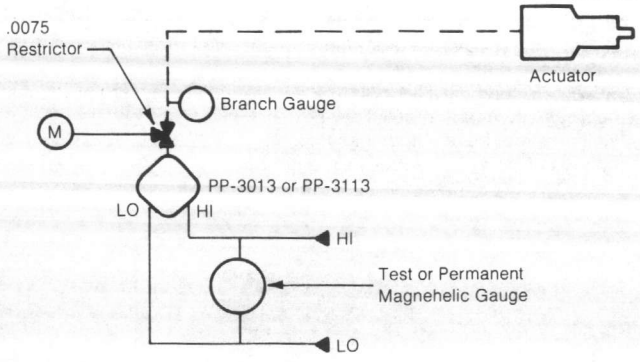

Figure 1.

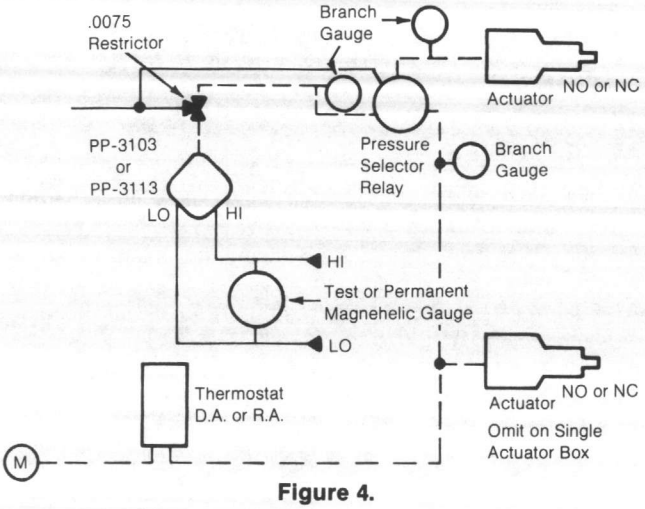

Figure 4.

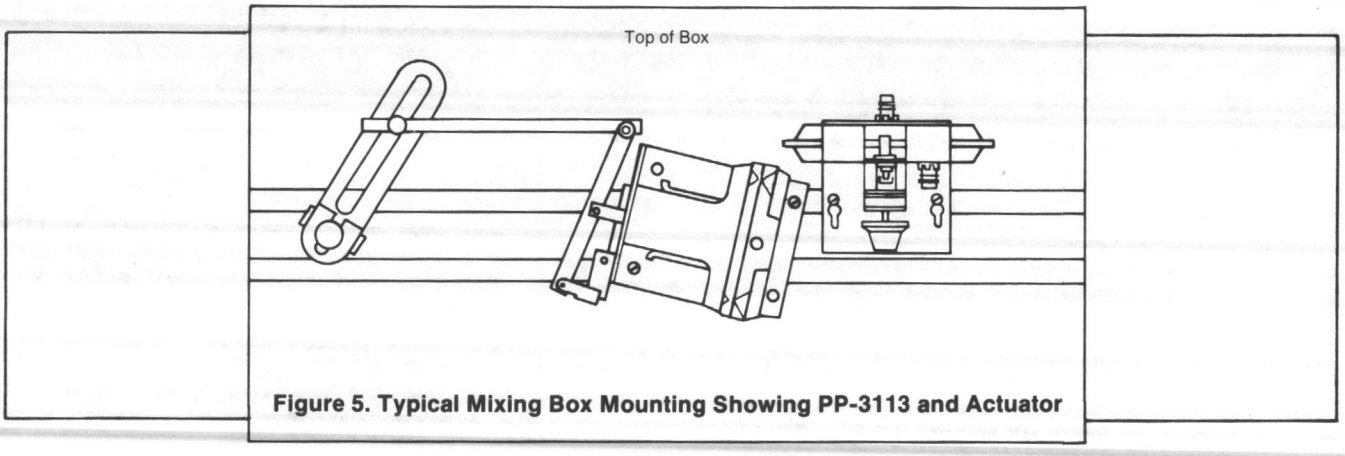

Figure 5. Typical Mixing Box Mounting Showing PP-3113 and Actuator

Barber-Colman Company
ENVIRONMENTAL CONTROLS DIVISION

1354 Clifford Avenue
P.O. Box 2940
Loves Park, IL U.S.A. 61132-2940

M-1

General Instructions

Pneumatic Damper Actuators MK-4401, MK-4411, MK-4421

General

These pneumatic actuators are designed for use as damper positioners. The type of positioning, proportional or two-position, is determined by the controller, such as a thermostat or relay. Actuators are positioned by air pressure acting upon a diaphragm and piston. Opposing the force on the top of the piston is a spring. As the air pressure increases, the piston force overcomes the spring force and the actuator shaft extends. If the pressure lessens, the spring force retracts the shaft.

Units are constructed of a die cast aluminum housing enclosing a molded neoprene diaphragm, steel piston and piston shaft, sintered bronze shaft-guide bushing and steel spring.

The molded neoprene diaphragm has a circular bead which mates with a groove in the pressure housing insuring positive locating and sealing of the diaphragm with the housing.

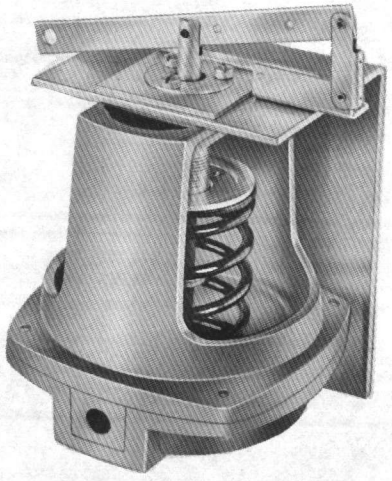

Installation

Make all connections in accordance with job piping diagram. Use 1/4" OD copper or plastic tubing to connect the actuator to the controller. Units have 1/8" NPT female inlet for connection to the supply air. Actuators are mounted by means of four screws through the mounting bracket. Attach connector to lever arm, insert the rod in the connector and tighten set screw. Figure 1 illustrates damper linkage for 90° rotation.

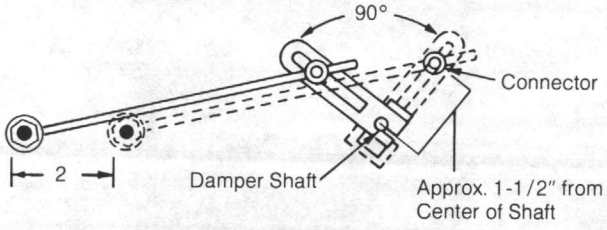

Figure 1

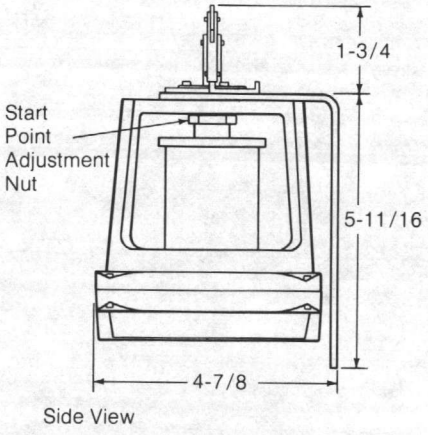

Figure 2

Adjustable Starting Pressure

Actuators are available with adjustable starting pressure. These units are generally used for sequencing operation. To adjust the starting pressure, turn adjusting nut supporting the spring clockwise to decrease and counterclockwise to increase the starting pressure, when viewing the actuator from the shaft end (Figure 2). Each rotation of the adjusting nut changes the starting pressure 0.04 psi.

Diaphragm Replacement

If the actuator diaphragm should leak, it may easily be replaced by removing the four screws holding the top power housing.

Remove the screws and old diaphragm. Insert new diaphragm over piston.

Put the top power housing back in place making sure the bead on the diaphragm is in the housing groove and the screw holes are lined up. Tighten housing screws.

Barber-Colman Company
ENVIRONMENTAL CONTROLS DIVISION
1300 Rock Street, Rockford, Illinois, U.S.A., 61101

LITHO IN U.S.A.

F-13775-1

CAC

DUPLEX SIMILAR

SUBMITTAL DATA

CLIMATE CONTROL AIR COMPRESSORS

LITHO IN U.S.A. 11-83

F-18984-1

SPECIFICATION FOR SINGLE STAGE CLIMATE CONTROL COMPRESSORS

STANDARD EQUIPMENT

- Totally enclosed metal belt guard
- Cast iron compressor pump
- GE or equivalent motors
- Automatic overload protector standard on all single phase motors through 1 HP
- Magnetic starters standard on all 3 HP motors
- All electrical wiring enclosed in flexible metal cable
- Intake air filter — mufflers
- Pressure switch, gauge and check valve
- Safety valve, tank drain and outlet valve
- All tanks ASME – 125 PSI WORKING PRESSURE

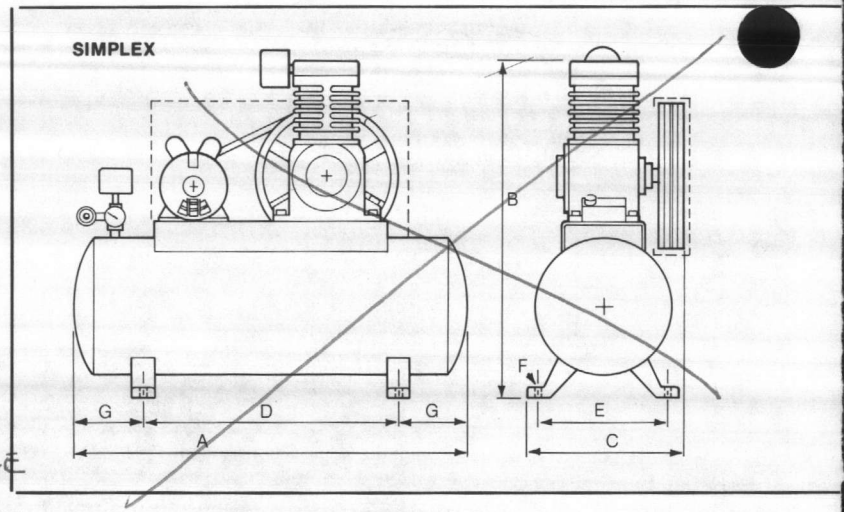

* MAX PISTON SPEED OF 950 FPM.

SL.

Model No.	HP	RPM	Tank Size (Gal.)	Motor Data	CFM @ 100 PSI	Dimensions (Inches)						
						A	B	C	D	E	F	G
SINGLE STAGE SIMPLEX												
K105-4-00-4	1/2	590	17	115-60-1	1.8	37	26	16	18	8	9/16	9-1/2
K105-5-00-4	1/2	590	30	115-60-1	1.8	38	34	19	22	13-3/4	9/16	8
K105-6-00-4	1/2	590	60	115-60-1	1.8	47	37	25	26	18-1/2	9/16	10-1/2
K106-4-00-4	1/2	590	17	208-60-3	1.8	37	26	16	18	8	9/16	9-1/2
K106-5-00-4	1/2	590	30	208-60-3	1.8	38	34	19	22	13-3/4	9/16	8
K106-6-00-4	1/2	590	60	208-60-3	1.8	47	37	25	26	18-1/2	9/16	10-1/2
K107-4-00-4	1/2	590	17	230/460-60-1	1.8	37	26	16	18	8	9/16	9-1/2
K107-5-00-4	1/2	590	30	230/460-60-1	1.8	38	34	19	22	13-3/4	9/16	8
K107-6-00-4	1/2	590	60	230/460-60-1	1.8	47	37	25	26	18-1/2	9/16	10-1/2
K108-4-00-4	3/4	400	17	115-60-1	2.7	37	26	16	18	8	9/16	9-1/2
K108-5-00-4	3/4	400	30	115-60-1	2.7	38	34	19	22	13-3/4	9/16	8
K108-6-00-4	3/4	400	60	115-60-1	2.7	47	37	25	26	18-1/2	9/16	10-1/2
K109-4-00-4	3/4	400	17	208-60-3	2.7	37	26	16	18	8	9/16	9-1/2
K109-5-00-4	3/4	400	30	208-60-3	2.7	38	34	19	22	13-3/4	9/16	8
K109-6-00-4	3/4	400	60	208-60-3	2.7	47	37	25	26	18-1/2	9/16	10-1/2
K110-4-00-4	3/4	400	17	230/460-60-3	2.7	37	26	16	18	8	9/16	9-1/2
K110-5-00-4	3/4	400	30	230/460-60-3	2.7	38	34	19	22	13-3/4	9/16	8
K110-6-00-4	3/4	400	60	230/460-60-3	2.7	47	37	25	26	18-1/2	9/16	10-1/2
K111-5-00-4	1	510	30	115-60-1	3.8	38	34	19	22	13-3/4	9/16	8
K111-6-00-4	1	510	60	115-60-1	3.8	47	37	25	26	18-1/2	9/16	10-1/2
K111-7-00-4	1	510	80	115-60-1	3.8	63	37	25	35	18-1/2	9/16	14
K112-5-00-4	1	510	30	208-60-3	3.8	38	34	34	22	13-3/4	9/16	8
K112-6-00-4	1	510	60	208-60-3	3.8	47	37	37	26	18-1/2	9/16	10-1/2
K112-7-00-4	1	510	80	208-60-3	3.8	63	37	37	35	18-1/2	9/16	14
K113-5-00-4	1	510	30	230/460-60-3	3.8	38	34	34	22	13-3/4	9/16	8
K113-6-00-4	1	510	60	230/460-60-3	3.8	47	37	37	26	18-1/2	9/16	10-1/2
K113-7-00-4	1	510	80	230/460-60-3	3.8	63	37	37	35	18-1/2	9/16	14
SINGLE STAGE DUPLEX												
K205-6-00-4	1/2	590	60	115-60-1	1.8	56	44	25	26	18-1/2	9/16	15
K206-6-00-4	1/2	590	60	208-60-3	1.8	56	44	25	26	18-1/2	9/16	15
K207-6-00-4	1/2	590	60	230/460-60-3	1.8	56	44	25	26	18-1/2	9/16	15
K208-6-00-4	3/4	400	60	115-60-1	2.7	56	44	25	26	18-1/2	9/16	15
K209-6-00-4	3/4	400	60	208-60-3	2.7	56	44	25	26	18-1/2	9/16	15
K210-6-00-4	3/4	400	60	230/460-60-3	2.7	56	44	25	26	18-1/2	9/16	15
K211-6-00-4	1	510	60	115-60-1	3.8	56	44	25	26	18-1/2	9/16	15
K211-7-00-4	1	510	80	115-60-1	3.8	68	44	25	35	18-1/2	9/16	16-1/2
K212-6-00-4	1	510	60	208-60-3	3.8	56	44	25	26	18-1/2	9/16	15
K212-7-00-4	1	510	80	208-60-3	3.8	68	44	25	35	18-1/2	9/16	16-1/2
K213-6-00-4	1	510	60	230/460-60-3	3.8	56	44	25	26	18-1/2	9/16	15
K213-7-00-4	1	510	80	230/460-60-3	3.8	68	44	25	35	18-1/2	9/16	16-1/2

Model No.	HP	RPM	Tank Size (Gal.)	Motor Data	CFM @ 100 PSI	Dimensions (Inches)						
						A	B	C	D	E	F	G
TWO STAGE DUPLEX												
K214-6-00-4	1-1/2	520	60	208-60-3	7.1	56	44	25	26	18-1/2	9/16	15
K214-7-00-4	1-1/2	520	80	208-60-3	7.1	68	44	25	35	18-1/2	9/16	16-1/2
K215-6-00-4	1-1/2	520	60	230/460-60-3	7.1	56	44	25	26	18-1/2	9/16	15
K215-7-00-4	1-1/2	520	80	230/460-60-3	7.1	68	44	25	35	18-1/2	9/16	16-1/2
K216-6-00-4	2	570	60	208-60-3	7.6	56	44	25	26	18-1/2	9/16	15
K216-7-00-4	2	570	80	208-60-3	7.6	68	44	25	35	18-1/2	9/16	16-1/2
K217-6-00-4	2	570	60	230/460-60-3	7.6	56	44	25	26	18-1/2	9/16	15
K217-7-00-4	2	570	80	230/460-60-3	7.6	68	44	25	35	18-1/2	9/16	16-1/2
K218-6-00-4	3	490	60	208-60-3	11.1	76	48	25	26	18-1/2	9/16	25
K218-7-00-4	3	490	80	208-60-3	11.1	76	48	25	35	18-1/2	9/16	20-1/2
K219-6-00-4	3	490	60	230/460-60-3	11.1	76	48	25	26	18-1/2	9/16	25
K219-7-00-4	3	490	80	230/460-60-3	11.1	76	48	25	35	18-1/2	9/16	20-1/2
K222-6-00-4	5	560	60	208-60-3	17.5	76	51	25	26	18-1/2	9/16	25
K222-7-00-4	5	560	80	208-60-3	17.5	76	51	25	35	18-1/2	9/16	20-1/2
K222-8-00-4	5	560	120	208-60-3	17.5	80	58	34	42	21	9/16	19
K223-6-00-4	5	560	60	230/460-60-3	17.5	76	51	25	26	18-1/2	9/16	25
K223-7-00-4	5	560	80	230/460-60-3	17.5	76	51	25	35	18-1/2	9/16	20-1/2
K223-8-00-4	5	560	120	230/460-60-3	17.5	80	58	34	42	21	9/16	19
K226-7-00-4	7-1/2	618	80	208-60-3	29.9	80	53	25	35	18-1/2	9/16	22-1/2
K226-8-00-4	7-1/2	618	120	208-60-3	29.9	80	57	34	42	21	9/16	19
K227-7-00-4	7-1/2	618	80	230/460-60-3	29.9	80	53	25	35	18-1/2	9/16	22-1/2
K227-8-00-4	7-1/2	618	120	230/460-60-3	29.9	80	57	34	42	21	9/16	19
K230-7-00-4	10	710	80	208-60-3	35.4	80	53	25	35	18-1/2	9/16	22-1/2
K230-8-00-4	10	710	120	208-60-3	35.4	80	57	34	42	21	9/16	19
K231-7-00-4	10	710	80	230/460-60-3	35.4	80	53	25	35	18-1/2	9/16	22-1/2
K231-8-00-4	10	710	120	230/460-60-3	35.4	80	57	34	42	21	9/16	19
K234-8-00-4	15	525	120	208-60-3	57.6	112	68	34	42	21	9/16	35
K234-9-00-4	15	525	240	208-60-3	57.6	112	68	45	45	27	1	33-1/2
K235-8-00-4	15	525	120	230/460-60-3	57.6	112	68	34	42	21	9/16	35
K235-9-00-4	15	525	240	230/460-60-3	57.6	112	68	45	45	27	1	33-1/2
K238-8-00-4	20	672	120	208-60-3	73.8	112	68	34	42	21	9/16	35
K238-9-00-4	20	672	240	208-60-3	73.8	112	68	45	45	27	1	33-1/2
K239-8-00-4	20	672	120	230/460-60-3	73.8	112	68	34	42	21	9/16	35
K239-9-00-4	20	672	240	230/460-60-3	73.8	112	68	45	45	27	1	33-1/2
K242-8-00-4	25	778	120	208-60-3	83.0	112	68	34	42	21	9/16	35
K242-9-00-4	25	778	240	208-60-3	83.0	112	68	45	45	27	1	33-1/2
K243-8-00-4	25	778	120	230/460-60-3	83.0	112	68	34	42	21	9/16	35
K243-9-00-4	25	778	240	230/460-60-3	83.0	112	68	45	45	27	1	33-1/2

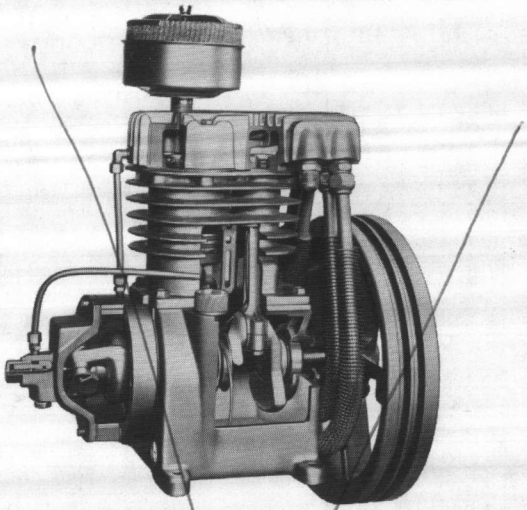

SINGLE STAGE

VALVE — Large area quick acting, hardened and ground swedish steel disc. Stainless steel spring. Cast iron seats for long life and accurate seating. No special tools required.

PISTON RINGS — Automotive type.

WRIST PIN — Hardened and ground.

PISTON — Precision machined alloy aluminum.

CONNECTING RODS — Alloy aluminum "H" section rods —extra large bearing surface.

CRANKCASE — Dust tight — enclosed.

MAIN BEARINGS — Oversize ground precision ball type —support both ends of crankshaft.

INTAKE UNLOADERS — Brass and stainless — built into head.

VALVE PLATE — One piece — complete exchange in minutes.

COMBINATION FILTER/MUFFLER — Highly efficient filtering of air plus noise reduction (F series — insert filter type).

COOLING FINS — Large area — on cast iron. Bored and honed cylinder.

FLYWHEEL — Fan type.

CASTING — Close-grain cast iron.

LUBRICATION — Automatic splash type — trouble free and positive action.

HI LEVEL OIL FILL — Cannot be "over filled".

OIL DRAIN — Easily accessible.

TWO STAGE

CRANKSHAFT — Counter balanced, with super-finished bearing surfaces.

CENTRIFUGAL UNLOADER — An efficient, durable device for pressure relief to insure no-load starting.

OIL GAUGE & FILLER — Oil level is quickly checked. Larger oil fill opening is located for easy, quick compressor lubrication.

COMBINATION FILTER-SILENCER — Highly efficient filtering of air and noise reduction.

MULTIPLE VALVES — High efficiency, wafer-type valves (with minimum of parts) designed for long service life.

CYLINDERS — Deep, thin fins to dissipate heat, precision bored and finished to a micro-surface.

FLYWHEEL — Fan-bladed type, statically balanced.

IMPROVED INTERCOOLERS — Larger radiating fins. Pressure drop reduced by higher air flow capacity.

MAIN BEARINGS — Tapered roller or ball bearings. Crankshaft supported at both ends.

LUBRICATION SYSTEM — Positive controlled splash feed oiling to every wearing surface.

CRANKCASE — Totally enclosed.

IMPROVED HEAD DESIGN — Gives higher efficiency. Large direct air passages permit free flow of air, reducing pressure drop; greater cooling in valve areas.

CASTINGS — Close-grain iron.

PISTONS — Precision ground.

WRIST PIN BEARINGS — Roller type to withstand greater bearing load.

SPECIFICATION FOR DUAL STAGE CLIMATE CONTROL COMPRESSORS

DUPLEX

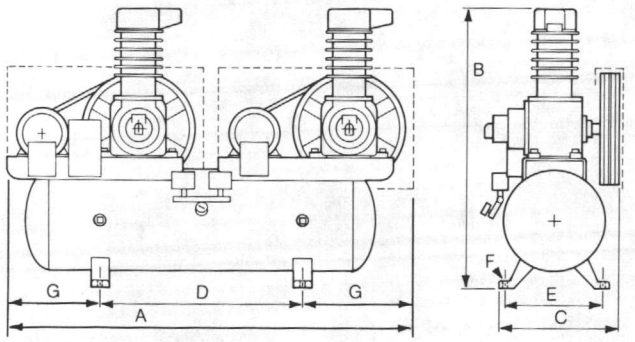

STANDARD EQUIPMENT

- Totally enclosed metal belt guard
- Cast iron compressor pump
- GE or equivalent motors
- Centrifugal loadless start
- Intake air filter — muffler
- Magnetic starter mounted and wired
- Multiple belt vee drive
- All air receivers ASME
- Intercooler and aftercooler
- Pressure switch, gauge, safety valve and check valve
- Tank drain and outlet valve
- All electrical wiring enclosed in flexible metal cable

Model No.	HP	RPM	Tank Size (Gal.)	Motor Data	CFM @ 100 PSI	Dimensions (Inches)						
						A	B	C	D	E	F	G
TWO STAGE SIMPLEX												
K114-6-00-4	1-1/2	520	60	208-60-3	7.1	47	39-1/2	25	26	18-1/2	9/16	10-1/2
K114-7-00-4	1-1/2	520	80	208-60-3	7.1	63	39-1/2	25	35	18-1/2	9/16	14
K115-6-00-4	1-1/2	520	60	230/460-60-3	7.1	47	39-1/2	25	26	18-1/2	9/16	10-1/2
K115-7-00-4	1-1/2	520	80	230/460-60-3	7.1	63	39-1/2	25	35	18-1/2	9/16	14
K116-6-00-4	2	570	60	208-60-3	7.6	47	39-1/2	25	26	18-1/2	9/16	10-1/2
K116-7-00-4	2	570	80	208-60-3	7.6	63	39-1/2	25	35	18-1/2	9/16	14
K117-6-00-4	2	570	60	230/460-60-3	7.6	47	39-1/2	25	26	18-1/2	9/16	10-1/2
K117-7-00-4	2	570	80	230/460-60-3	7.6	63	39-1/2	25	35	18-1/2	9/16	14
K118-6-00-4	3	490	60	208-60-3	11.1	47	42-3/4	25	26	18-1/2	9/16	10-1/2
K118-7-00-4	3	490	80	208-60-3	11.1	63	42-3/4	25	35	18-1/2	9/16	14
K119-6-00-4	3	490	60	230/460-60-3	11.1	47	42-3/4	25	26	18-1/2	9/16	10-1/2
K119-7-00-4	3	490	80	230/460-60-3	11.1	63	42-3/4	25	35	18-1/2	9/16	14
K122-6-00-4	5	560	60	208-60-3	17.5	47	47-1/2	25	26	18-1/2	9/16	10-1/2
K122-7-00-4	5	560	80	208-60-3	17.5	63	47-1/2	25	35	18-1/2	9/16	14
K122-8-00-4	5	560	120	208-60-3	17.5	69	47-1/2	25	42	21	9/16	13-1/2
K123-6-00-4	5	560	60	230/460-60-3	17.5	47	47-1/2	25	26	18-1/2	9/16	10-1/2
K123-7-00-4	5	560	80	230/460-60-3	17.5	63	47-1/2	25	35	18-1/2	9/16	14
K123-8-00-4	5	560	120	230/460-60-3	17.5	69	47-1/2	25	42	21	9/16	13-1/2
K126-7-00-4	7-1/2	618	80	208-60-3	29.9	63	45-1/2	25	35	18-1/2	9/16	14
K126-8-00-4	7-1/2	618	120	208-60-3	29.9	69	51-1/2	34	42	21	9/16	13-1/2
K127-7-00-4	7-1/2	618	80	230/460-60-3	29.9	63	45-1/2	25	35	18-1/2	9/16	14
K127-8-00-4	7-1/2	618	120	230/460-60-3	29.9	69	51-1/2	34	42	21	9/16	13-1/2
K130-7-00-4	10	710	80	208-60-3	35.4	63	45-1/2	25	35	18-1/2	9/16	14
K130-8-00-4	10	710	120	208-60-3	35.4	69	51-1/2	34	42	21	9/16	13-1/2
K131-7-00-4	10	710	80	230/460-60-3	35.4	63	45-1/2	25	35	18-1/2	9/16	14
K131-8-00-4	10	710	120	230/460-60-3	35.4	69	51-1/2	34	42	21	9/16	13-1/2
K134-8-00-4	15	525	120	208-60-3	57.6	69	65	34	42	21	9/16	13-1/2
K134-9-00-4	15	525	240	208-60-3	57.6	84	70	45	45	27	1	19-1/2
K135-8-00-4	15	525	120	230/460-60-3	57.6	69	65	34	42	21	9/16	13-1/2
K135-9-00-4	15	525	240	230/460-60-3	57.6	84	70	45	45	27	1	19-1/2
K138-8-00-4	20	672	120	208-60-3	73.8	69	65	34	42	21	9/16	13-1/2
K138-9-00-4	20	672	240	208-60-3	73.8	84	70	45	45	27	1	19-1/2
K139-8-00-4	20	672	120	230/460-60-3	73.8	69	65	34	42	21	9/16	13-1/2
K139-9-00-4	20	672	240	230/460-60-3	73.8	84	70	45	45	27	1	19-1/2
K142-8-00-4	25	778	120	208-60-3	83.0	69	65	34	42	21	9/16	13-1/2
K142-9-00-4	25	778	240	208-60-3	83.0	84	70	45	45	27	1	19-1/2
K143-8-00-4	25	778	120	230/460-60-3	83.0	69	65	34	42	21	9/16	13-1/2
K143-9-00-4	25	778	240	230/460-60-3	83.0	84	70	45	45	27	1	19-1/2

Barber-Colman Company
ENVIRONMENTAL CONTROLS DIVISION

1354 Clifford Avenue
P.O. Box 2940
Loves Park, IL U.S.A. 61132-2940

Product Information

(EMGLO)
Compressor Selection Chart

To determine compressor size:

1. Use the Compressor Sizing Work Sheet, F-17480, to find the number of equivalent units for all air consuming equipment in the system.
2. Select the compressor size from the table.

This table is based on the following formulas:

I. Compressor CFM Required = 3 × system CFM (from line second from bottom on F-17480).

S.L.

II. Starts per hour = 60 ÷ cycle time (minutes).

III. Cycle Time = $\frac{1.14 \times \text{Tank Size (gal.)} \times \text{Differen. (PSIG)}}{\text{System Units} \times \left(1 - \frac{\text{System CFM}}{\text{Compressor CFM}}\right)}$

IV. Run Time (minutes) = $\frac{\text{System CFM}}{\text{Compressor CFM}} \times$ cycle time (minutes)

V. Off Time = $\left(1 - \frac{\text{System CFM}}{\text{Compressor CFM}}\right) \times$ cycle time

= cycle time - run time

Model	Tank Size	HP	CFM at 100 PSI	RPM	Units at 33%	Units at 50%	Starts Per Hour at 33%	Starts Per Hour at 50%	Off Time in Min. 1/3	Off Time in Min. 1/2
K105, 106 & 107 K205, 206 & 207	17	1/2	1.8	590	75	113	6.2	7.0	6.5	4.3
	30	1/2	1.8	590	75	113	3.5	4.0	11.4	7.6
	60	1/2	1.8	590	75	113	2.0	2.0	22.8	15.1
K108, 109 & 110 K208, 209 & 210	17	3/4	2.7	400	114	169	9.4	10.5	4.3	2.9
	30	3/4	2.7	400	114	169	5.4	5.9	7.5	5.1
	60	3/4	2.7	400	114	169	2.7	3.0	15.0	10.1
	80	3/4	2.7	400	114	169	2.0	2.2	20.0	13.5
K111, 112 & 113 K211, 212 & 213	30	1	3.8	510	158	238	7.5	8.4	5.4	3.6
	60	1	3.8	510	158	238	3.7	4.2	10.8	7.2
	80	1	3.8	510	158	238	2.8	2.3	14.4	9.6
K114 & 115 K214 & 215	60	1-1/2	7.1	520	295	444	6.9	7.8	5.8	3.9
	80	1-1/2	7.1	520	295	444	5.2	5.8	7.7	5.1
K116 & 117 K216 & 217	60	2	7.6	570	318	475	7.5	8.3	5.4	3.6
	80	2	7.6	570	318	475	5.6	6.3	7.2	4.8
K118 & 119 K218 & 219	60	3	11.1	490	472	706	10.9	12.1	3.6	2.4
	80	3	11.1	490	472	706	7.3	9.1	5.4	3.6
K122 & 123 K222 & 223	60	5	17.5	560	730	1094	10.7	12.0	3.7	2.5
	80	5	17.5	560	730	1094	8.0	9.0	5.0	3.3
	120	5	17.5	560	730	1094	5.4	6.0	7.5	5.0
K126 & 127 K226 & 227	80	7-1/2	29.9	618	1245	1869	13.7	15.4	2.9	2.0
	120	7-1/2	29.9	618	1245	1869	9.1	10.2	4.4	2.9
K130 & 131 K230 & 231	80	10	35.4	710	1474	2213	16.3	18.2	2.5	1.6
	120	10	35.4	710	1474	2213	10.8	12.1	3.7	2.5
K134 & 135 K234 & 235	120	15	57.6	525	2401	3600	17.6	19.7	3.1	1.5
	240	15	57.6	525	2401	3600	8.8	9.7	6.1	3.0
K138 & 139 K238 & 239	120	20	73.8	672	3075	4613	22.6	25.3	1.8	1.9
	240	20	73.8	672	3075	4613	11.3	12.6	3.6	2.4
K142 & 143 K242 & 243	120	25	83.0	778	3458	5188	25.4	28.4	1.6	1.1
	240	25	83.0	778	3458	5188	12.7	14.2	3.2	2.1

K1XX Simplex Models
K2XX Duplex Models

NOTE: Maximum recommended starts per hour for lubricated air compressors is 15. Service life of the compressor will be affected as the number of compressor starts per hour is increased.

Standard diff. pressure on 1/2 HP thru 3 HP units is 75 to 100 PSI.

Diff. pressure 40 PSI on all 5 HP above, 60 to 100 PSI pressure setting.

Barber-Colman Company
ENVIRONMENTAL CONTROLS DIVISION

1354 Clifford Avenue
P.O. Box 2940
Loves Park, IL U.S.A. 61132-2940

LITHO IN U.S.A. 11-83

Q607A,B continued

ELECTRICAL RATINGS: (amperes):

	120 V	240 V	480 V
Full Load	9.8	4.9	2.45
Locked Rotor	58.8	29.4	14.7

Pilot Duty: 75 VA at 24 V and 277 V.
Resistive Load: 22 A at 24 V, 120 V, 240 V, 277 V; 15 A at 480 V.

REPLACEMENT PART:
127834 Switch.

TRADELINE models.

Order Number	Switches	Use With
Q607A1076[a]	1 spdt	Honeywell Modutrol motors
Q607B1083[a]	2 spdt.	

[a]With adapter for cover end of spring-return motor and mounting bracket.

M-Z

M436A, M836A,B DAMPER MOTORS

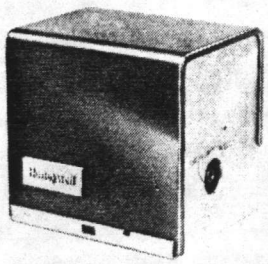

SPRING-RETURN MOTORS FOR 2-POSITION ZONE OR DAMPER CONTROL.

Used in residential and light industrial applications to operate outdoor air dampers for combustion or makeup air, changeover dampers for heating and cooling systems, minimum position dampers for ventilation and similar applications. With internal spdt switch for controlling auxiliary equipment, additional motors, or to provide a burner interlock switch. Spring returns motor to start position on power failure. Drive shafts located on both sides of motor. Angular Stroke: 75 degrees. Power Consumption: 27 W opening for M436A, M836A; 20.3 W opening for M836B. Ambient Temperature Range: 32 F to 125 F [0 C to 52 C]. Approximate Dimensions: 4-1/2 in. [114 mm] high, 4-5/8 in. [118 mm] wide, 3-3/4 in. [95 mm] deep. Listed by Underwriters Laboratories Inc.—M436A, M836A; CSA certified—M436A, M836A.

AUXILIARY SWITCH RATINGS (amperes):

	120 Vac	240 Vac
Full Load	7.2	3.6
Locked Rotor	43.2	21.6

ACCESSORIES:

16254AC Bag Assembly. Mounting bracket, Part No. 128499, and screws.
7640JE Bag Assembly. Drive bushings, adapter, and coupling for direct drive.
7640JL Bag Assembly. Drive lever and clamp for crank arm drive.
7640JM Bag Assembly. Mounting bracket, Part No. 126809, and screws.
7640JN Bag Assembly. Mounting bracket, Part No. 128336, and screws.
4074BRU Bag Assembly. Extension adapter and screws for mounting Q607 Auxiliary Switch to M436A Damper Motor.
Q298B Linkage. Damper crank arms, bushings, 1/4 in. steel rod, and ball joint assemblies.

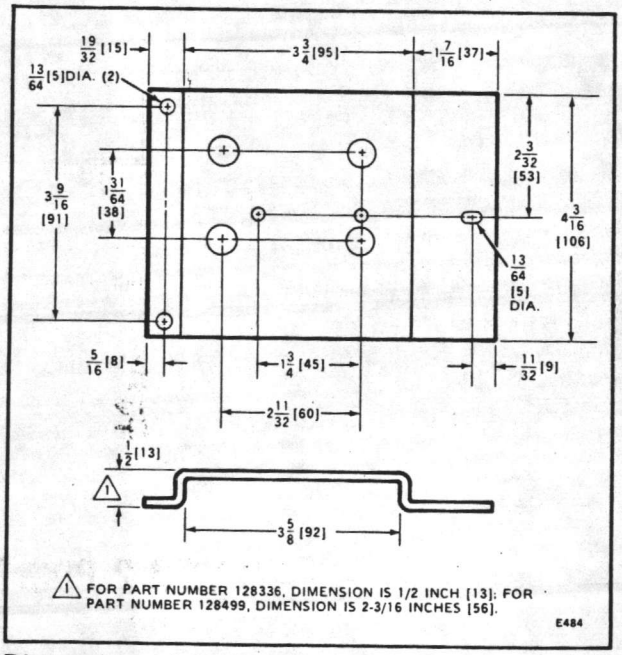

Dimensions of 128336 and 128499 Brackets in in. [mm].

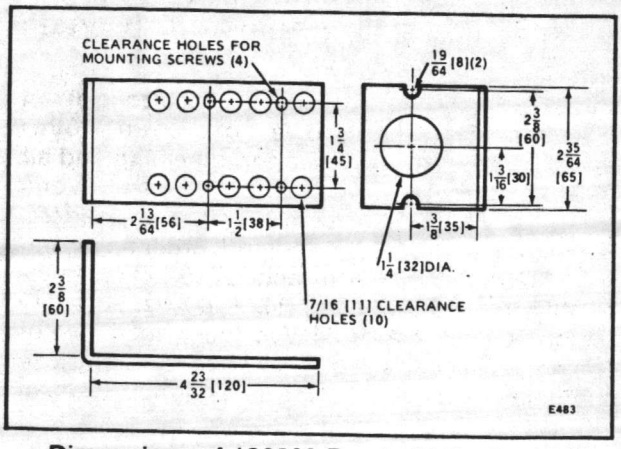

Dimensions of 126809 Bracket in in. [mm].

continued next page

M436A, M836A,B continued

TRADELINE models.

Order Number	Application/ Description	Voltage (60 Hz)	Nominal Opening Current (A)	Nominal Opening Time (sec)	Max. Load Torque		Break-Away Torque[b]		Damper Blade Area		Includes
					lb.-in.	N·m	lb.-in.	N·m	sq ft	m²	
M436A1116	Use with 2-wire thermostats or other spst controllers.	120	0.37	30	20	2.3	30	3.4	13	1.2	Mounting brackets, Part Nos. 126809, 128336, 128499, and bag assembly containing the drive bushings, adapter, and coupling necessary for direct drive applications and the crank arm lever and clamp necessary for crank arm drive applications.
M436A1124	With thermal breaker for overload protection during the lifting stroke or if motor stalls.	240	0.19	30	20	2.3	30	3.4	13	1.2	
M836A1042	Use with spst controllers without heat anticipation. With thermal breaker for overload protection during the lifting stroke or if motor stalls.	24	1.85	30	20	2.3	30	3.4	13	1.2	
M8361067[a]		24	1.85	30	20	2.3	30	3.4	13	1.2	
M836B1033	Use with spst controllers which have heat anticipation.	24	1.34	25	15	1.7	30	3.4	10	0.9	

[a]For flame safeguard application with special mounting bracket and crank arm accessories.

[b]Maximum torque available to overcome large loads such as a seized damper or valve. MUST NOT BE USED CONTINUOUSLY AT THIS RATING.

M835A 2-POSITION ZONE MOTOR

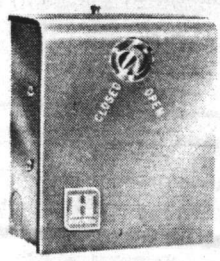

USED WITH 2-WIRE, 24 VOLT ROOM THERMOSTAT OR OTHER CONTROLLER FOR 2-POSITION DAMPER CONTROL.

Suitable for control of zone or changeover damper in heating and air conditioning systems, and control gates on feeders. For remote damper blade control, order separately 121825AA Crank Arm and Q298 Linkage Assembly. Electrical Rating: 24 V, 60 Hz. Auxiliary Switch Rating: 2 A at 24 Vac (pilot duty). Motor Timing: 80 seconds to open, 160 seconds to close damper. End Switch: Spst; makes within 20 sec of full open, breaks within 20 sec after start of closing stroke. Motor Torque: 4 lb.-in. [0.45 N·m] or 400 sq in. [0.26 m²] of bearing-mounted damper. Temperature Rating: Heating application—200 F [93 C] duct with 125 F [52 C] ambient maximum; cooling application—140 F [60 C] ambient maximum. Approximate Dimensions: 5-1/2 in. [140 mm] high, 4-1/4 in. [108 mm] wide, 2-5/8 in. [67 mm] deep.

NOTE: A template to assist positioning motor and damper blade is furnished with each M835. Use of 124857A Mounting Plate is recommended.

ACCESSORIES:

D524 Duct Damper Blade.

124857A Mounting Plate.

121825AA Auxiliary Crank Arm Assembly. Attaches to front of motor for remote control of additional dampers.

Q298A Linkage. Variable length linkage rod (10 in. [254 mm] maximum). For use wtih auxiliary crank arm assembly.

continued next page

PENN DAMPERS

AIR CONTROL DAMPERS

Supplementary Data Sheet

TO ENGINEERING BULLETIN PDR-77

MODEL PBD-8 OBD-8

GENERAL DESCRIPTION

Parallel Blade and Opposed Blade dampers are designed using the modular concept to provide maximum quality and performance commensurate with economy and versatility. By utilizing this type of construction, features that were at one time "optional extras" now become standard features without adding to the cost of the air control damper.

The PBD-8 and OBD-8 dampers are specifically designed to operate in systems when the approach velocity does not exceed 2000 FPM and the static pressure differential does not exceed 4" WG.

MODELS AVAILABLE

Model PBD-8 parallel blade action
Model OBD-8 opposed blade action

OPTIONAL FEATURES

Thrust Bearings	Aluminum Blades
Nylon Bearings	2" Channel Frame
Enamel or Lacquer Finish	Concealed Linkage
Reinforced Corners	Sized to Order

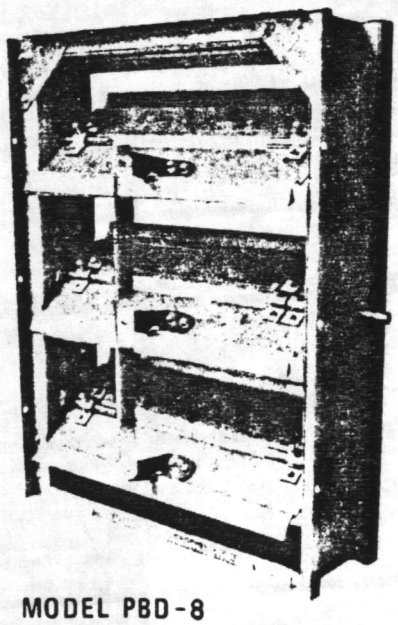

MODEL PBD-8

SPECIFICATIONS

Frame: 16 gauge galvanized steel roll formed channel 5½" W x 1" H with pre-punched slotted mounting holes - 7" O.C.

Blades: 16 gauge galvanized steel, maximum width 8"; blades 36" and longer furnished with reinforcing cone; driven blade furnished with reinforcing cone.

Ext. Shafts: ½" diameter cadmium plated steel; 6" long with grip-lok flattened end.

Bearings: Precision machined oilite bronze, sleeve type

Side Seal: Stainless spring steel

Finish: Galvanized Steel, Mill

Sizes: Minimum 12" W x 12" H; Maximum 48" W x 72" H, single section; ganging of damper sections allow unlimited sizes.

EFFICIENCY 0.5%

Refer to Figure 1

1. Dampers with blade edging of Penyltrene resiliant sealing gasket, ". . . air loss through Models PBD-8 or OBD-8 will be less ~~than 1%~~ of the full flow rate when operating at pressure differentials under 4" WG . . ." Approach velocity 2000 FPM.

ORDER INFORMATION REQUIRED:

1. Specify Model No.
2. Specify quantity
3. Specify size, width x height in inches. Width is first digit.
4. Specify optional features required.

GENERAL SPECIFICATIONS

Parallel blade and Opposed blade dampers (PBD-8 and OBD-8) are engineered to provide the high performance required for the proper operation of HVAC systems. These dampers are designed for use in systems when the approach velocity does not exceed 2000 fpm and the pressure differential across the damper does not exceed 4" w.g.

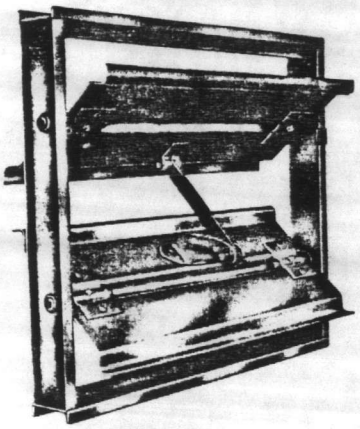

Model OBD-8
STRAIGHT SIDE
2" CHANNEL FRAME
OPPOSED BLADE

AIR LEAKAGE FIGURE 1

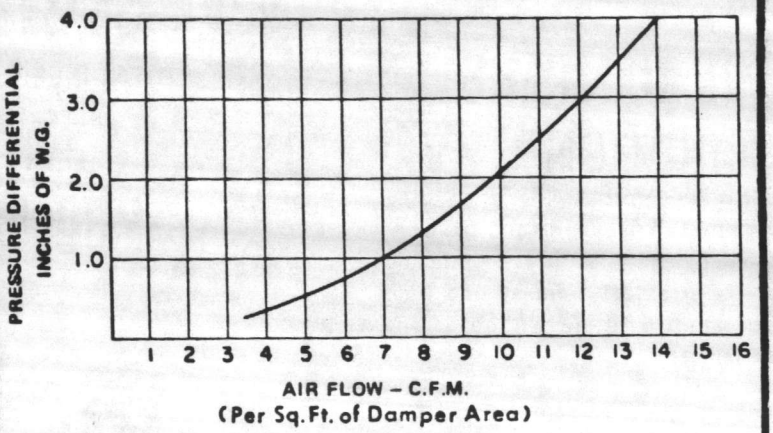

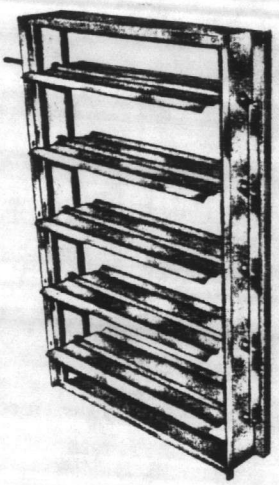

Model PBD-8
CONCEALED LINKAGE
5½" CHANNEL FRAME

PRESSURE DROP

PARALLEL BLADE DAMPER – MODEL PBD-8

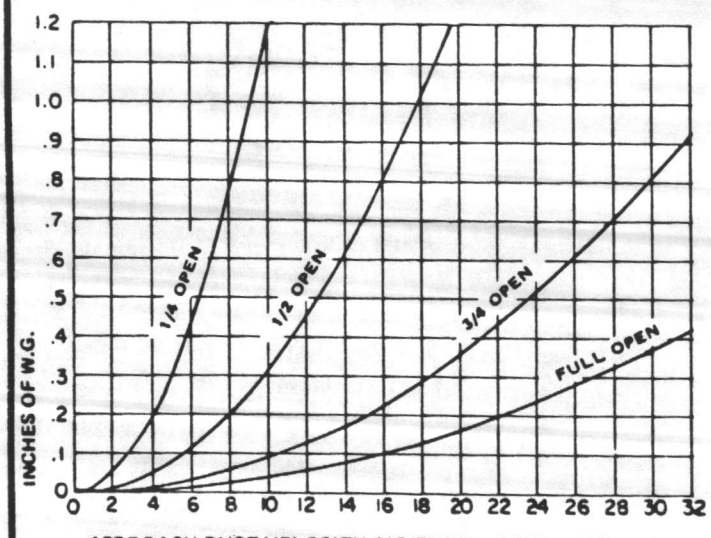

OPPOSED BLADE DAMPER – MODEL OBD-8

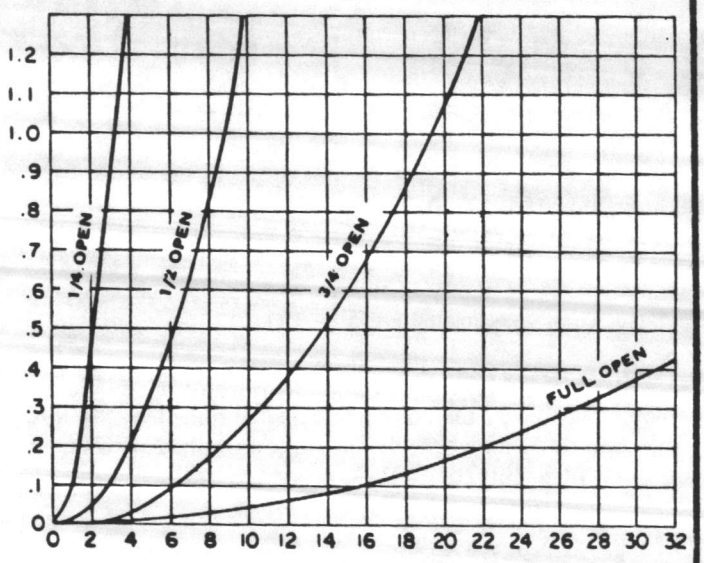

OPERATING TORQUE

NO AIR MOVEMENT – 3.10 IN. LBS. OF TORQUE PER SQ. FT. OF DAMPER FACE AREA.

DO NOT SELECT OPERATOR WITH LESS THAN 20 IN. LBS. FOR ANY SIZE OF DAMPER.

PENN VENTILATOR CO., Inc.
RED LION AND GANTRY ROADS
PHILADELPHIA, PA. U.S.A. 19115
TELEPHONE: . . . . . (215) 464-8900
TELEX:. . . . . 83-4545 (PENVENGEN PHA)

PENN AIR CONTROL MECHANICAL DAMPER

(MODEL OBD-8)

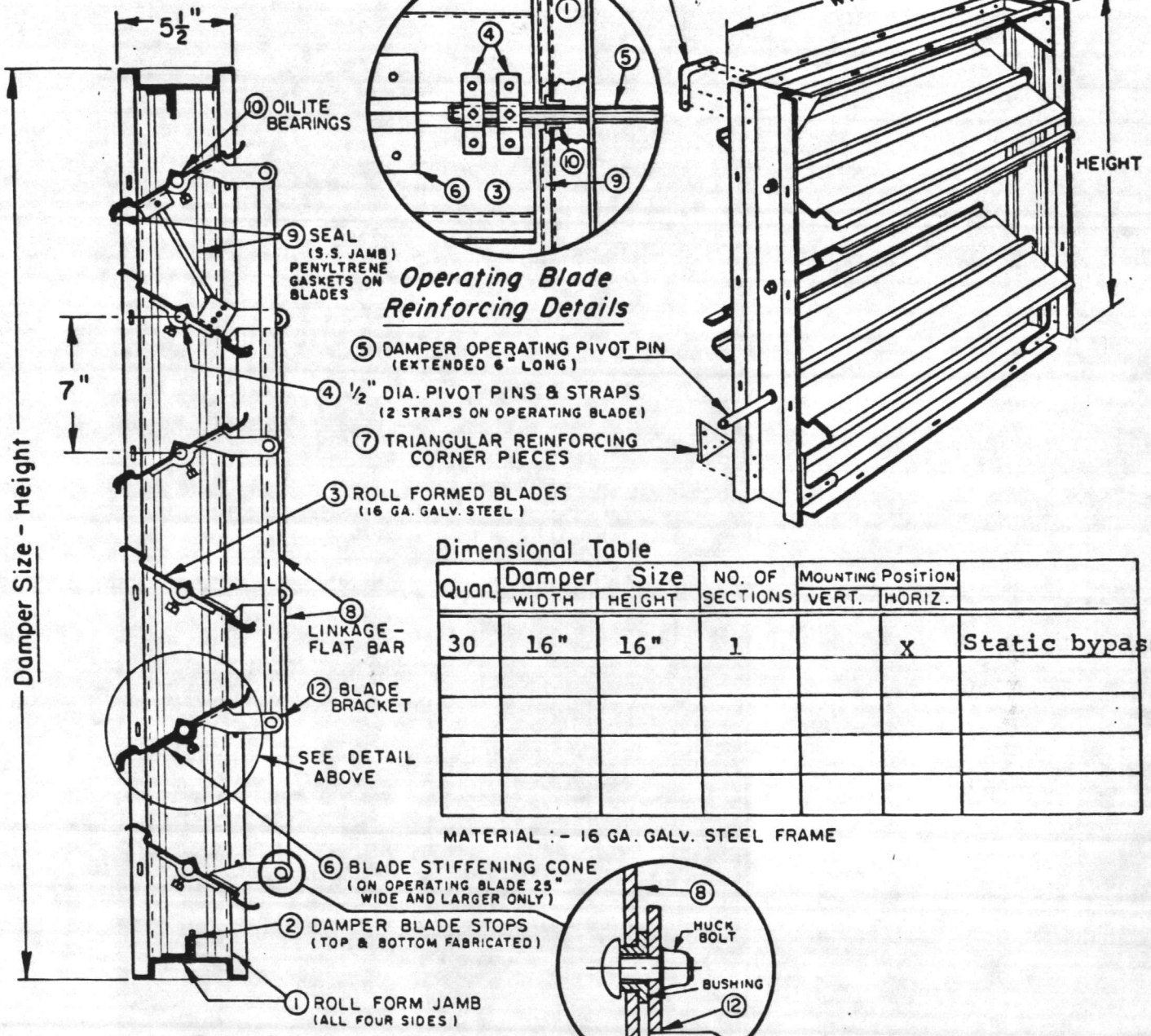

Vertical Section

Dimensional Table

Quan.	Damper Size WIDTH	Damper Size HEIGHT	NO. OF SECTIONS	Mounting Position VERT.	Mounting Position HORIZ.	
30	16"	16"	1		X	Static bypass

MATERIAL :- 16 GA. GALV. STEEL FRAME

NOTES: 1. SINGLE PANEL MAX. WIDTH 48", MAX. HEIGHT 72".

PROJECT:	ENGINEER:
LOCATION:	CONTRACTOR:
ARCHITECT:	SUB-CONTR.

DRAWING NO.		REVISIONS
DATE:		NO. 1
DRAWN BY: B.G.	CHK. BY:	NO. 2
		NO. 3

PENN VENTILATOR CO., Inc.
RED LION AND GANTRY ROADS
PHILADELPHIA, PA. U.S.A. 19115
(AREA CODE 215) 464-8900 TELEX. 83-4545

THIS DRAWING ILLUSTRATES OUR UNDERSTANDING OF ORDER REQUIREMENTS. WHEN APPROVED, IT REPRESENTS DETAILS FOR FABRICATION AS SUCH PENN VENTILATOR WILL NOT BE RESPONSIBLE FOR REVISIONS IN THE FIELD OR OTHER CHANGES AFTER RELEASE FOR FABRICATION

PUBLISHED & PROTECTED BY PENN VENTILATOR CO., INC., PHILA., PA. ALL RIGHTS RESERVED. MAY NOT BE REPRODUCED PARTIALLY OR IN FULL WITHOUT PER-

PENN AIR CONTROL MECHANICAL DAMPER

(MODEL PBD-8)

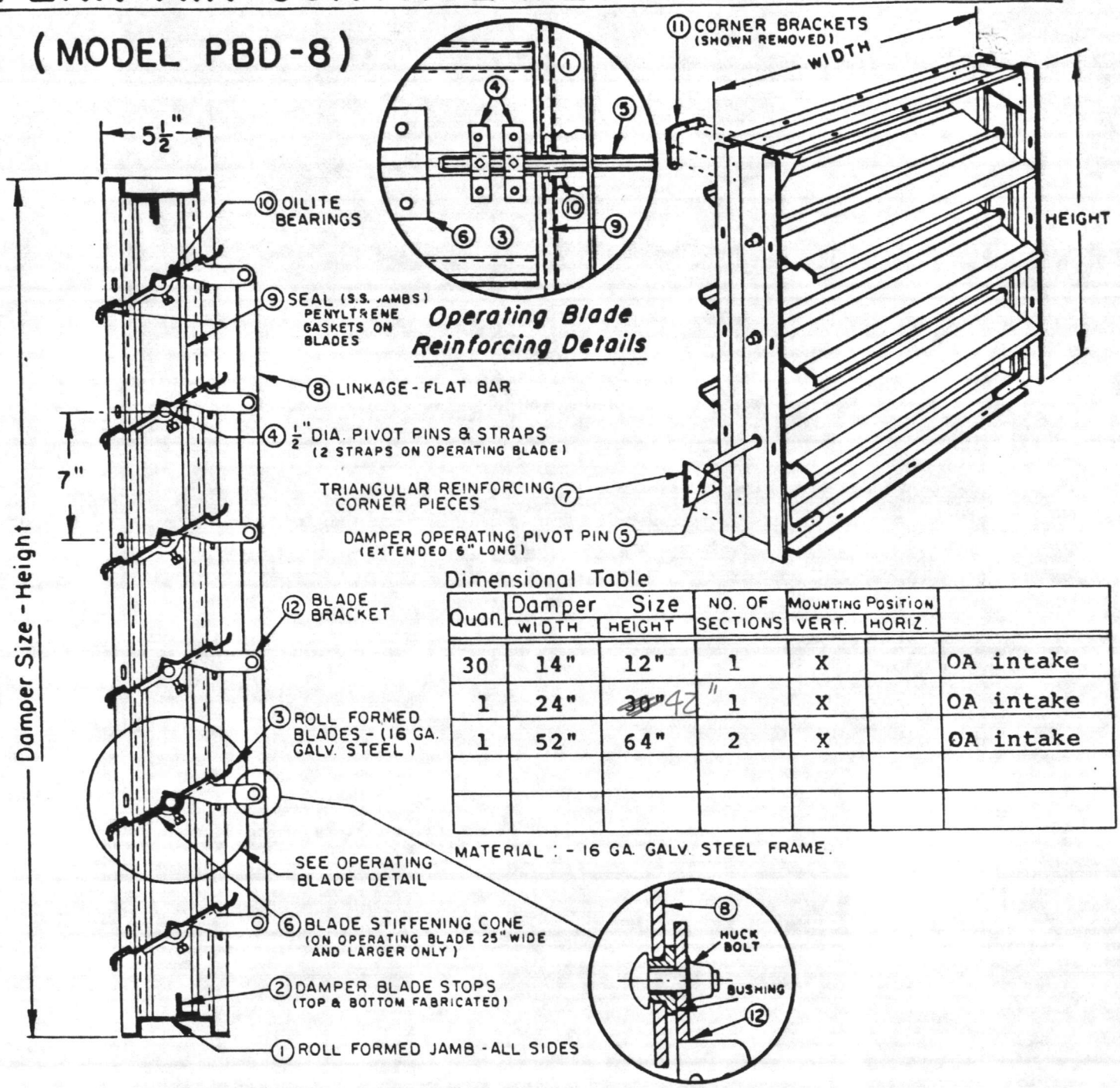

Dimensional Table

Quan.	Damper Size WIDTH	Damper Size HEIGHT	NO. OF SECTIONS	Mounting Position VERT.	Mounting Position HORIZ.	
30	14"	12"	1	X		OA intake
1	24"	~~30"~~ 42"	1	X		OA intake
1	52"	64"	2	X		OA intake

MATERIAL : - 16 GA. GALV. STEEL FRAME.

Vertical Section

NOTES: 1. SINGLE PANEL MAX. WIDTH 48" MAX. HEIGHT 72".

PROJECT:	ENGINEER:
LOCATION:	CONTRACTOR:
ARCHITECT:	SUB-CONTR.

DRAWING NO.		REVISIONS
DATE:		NO. 1
DRAWN BY: B.G.	CHK. BY:	NO. 2
		NO. 3

PENN VENTILATOR CO., Inc.
RED LION AND GANTRY ROADS
PHILADELPHIA, PA U.S.A. 19115
(AREA CODE 215) 464-8900 TELEX 83-4545

THIS DRAWING ILLUSTRATES OUR UNDERSTANDING OF ORDER REQUIREMENTS. WHEN APPROVED IT REPRESENTS DETAILS FOR FABRICATION. AS SUCH, PENN VENTILATOR WILL NOT BE RESPONSIBLE FOR REVISIONS IN THE FIELD OR OTHER CHANGES AFTER RELEASE FOR FABRICATION.

PUBLISHED & PROTECTED BY PENN VENTILATOR CO., INC., PHILA., PA. ALL RIGHTS RESERVED. MAY NOT BE REPRODUCED PARTIALLY OR IN FULL WITHOUT PERMISSION FROM THE PUBLISHER. NO RIGHTS CONVEYED TO MANUFACTURE, PARTIALLY OR IN FULL, USE OR SELL EITHER THE METHOD OF CONSTRUCTION REPRESENTED OR ANY INVENTION IN ANY WAY RELATED THERETO.

HANKISON
SERIES 80 Compressed Air Dryers

STANDARD FEATURES FOR THESE DRYERS INCLUDE:

- Power On Light (green)—Indicates power to unit
- High Air Temperature Warning Light (red)—Gives indication of refrigeration system malfunction or overloading.
- Hankison Designed & Manufactured Pilot Operated Automatic Condensate Drain Trap
- Facility for Wall Mounting Models 8010 thru 8035—Models 8010 & 8015 feature exclusive "one man" wall mounting bracket assembly
- Integral 40 Micron Particulate Afterfilter—Assures clean air downstream
- Provisions for Connection of Remote Alarm

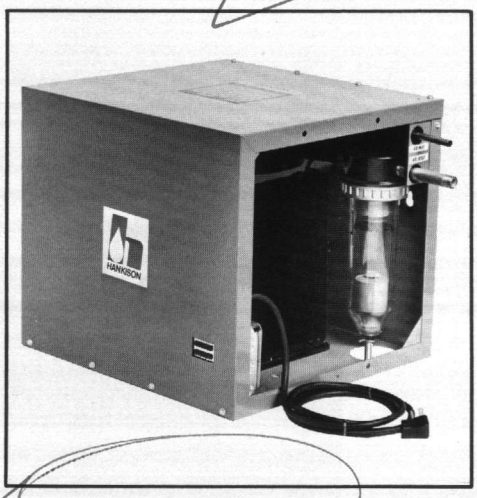

Typical Series 80 Dryers* (Model 8010 Shown)

ENGINEERING AND ORDERING INFORMATION

Hankison Series 80 dryers are complete with: non-fouling, smooth surface, tube-in-tube heat exchanger/chiller; non-cycling, hermetically sealed refrigeration system; self-regulating hot gas by-pass valve to maintain constant dew point from no load to full load; mechanical condensate separator; integral 40 micron porous bronze afterfilter; and pilot operated automatic condensate drain trap.

All units can handle additional capacity (SCFM) when inlet air pressure is higher than 100 psig, inlet air temperature is lower than 100°F., ambient air or condenser cooling water temperature is lower than 100°F. or if elevated dew points (up to 50°F.) are suitable for the application.

***Model 8010 can be purchased as a package complete with Hankison Air By-Pass Valve (model 1701-1), Aerolescer® oil removal filter, pressure regulator and pressure gauges, all factory mounted on unit.**

MODEL NO.		8010		8015		8025		8035		8045		8055		8070		80100	
Flow Capacity (SCFM)1		10		15		25		35		45		55		70		100	
Max. Working Pressure		150 psig (175 psig & 300 psig available)								175 psig (300 psig available)							
Air Line Conn.	In (ins.)	⅜ O.D. tube		⅜ O.D. tube		⅝ O.D. tube		⅝ O.D. tube		1⅛ O.D. tube		1⅛ O.D. tube		1⅛ O.D. tube		1⅛ O.D. tube	
	Out (ins.)	⅜ Male NPT		⅜ Male NPT		½ Male NPT		⅝ O.D. tube		1 Female NPT		1⅛ O.D. tube		1 Female NPT		1⅛ O.D. tube	
Drain Connections (ins.)		5/16 I.D. Flexible Tube								3/8 O.D. Tube Fitting							
Refrigeration Comp. HP		1/6		1/5		1/3		1/3		1/2		1/2		3/4		3/4	
Standard Voltages Available2		115 V, 1 phase, 60 Hz 240/220 V, 1 phase, 50 Hz								115 V, 1 phase, 60 Hz 230/208 V, 1 phase, 60 Hz							
		115V	240/220V	115V	240/220V	115V	240/220V	115V	240/220V	115V	230/208V	115V	230/208V	115V	230/208V	115V	230/208V
Full Load Amps.		3.3	1.5	4.8	2.2	7.4	3.5	7.4	3.5	9.8	4.8	9.8	4.8	18.5	9.4	18.5	9.4
Locked Rotor Amps.		18.5	9.1	24.5	11.6	35.7	16.3	35.7	16.3	47.9	24.4	47.9	24.4	69	41.8	69	41.8
Unit Protection 3 Fuse Size (Max.) Amps.		5	2	6	3	10	5	10	5	12	6	12	6	25	12	25	12
Branch Circuit Fuse Size (Max.) Amps.		15	15	15	15	15	15	15	15	15	15	15	15	30	15	30	15
Overload Protector		Thermal & Current (Automatic Reset)															
Height	(inches)	14		14		16		16		22¼		22¼		22¼		22¼	
Width	(inches)	16-1/8		16-1/8		22-1/16		22-1/16		32-1/4		32-1/4		32-1/4		32-1/4	
Depth	(inches)	15		15		16		16		19½		19½		19½		19½	
Weight	(lbs.)	58		68		96		98		187		212		220		235	

1Conditions for rating above dryers are in accordance with Class H of the National Fluid Power Association Recommended Standard NFPA/T3.27.2-1975. NFPA Class H Dryers are rated at 33°F. (.56°C.) to 39°F. (3.9°C.) pressure dew point range at 100 psig (6.9 bar) & 100°F. (37.8°C.) inlet air, 100°F. (37.8°C.) ambient air with a maximum 5 psi (.35 bar) pressure drop. Evaporator (chiller section) control circuit is factory set at 35°F. (1.7°C.).

2For other power requirements, consult factory.

3Ratings are for dual element fuses.

REDUCE THE DEWPOINT OF THE COMPRESSED AIR TO 15°F. S.L.

HANKISON CORPORATION, Canonsburg, Pa. 15317, Phone 412/745-1555, Telex: 81-2452, Cable: HANKORP

PRICE AND ORDERING INFORMATION AVAILABLE FROM:

HANKISON

NFPA NATIONAL FLUID POWER ASSOCIATION
ENERGY FOR INDUSTRY

I. Introduction

TR-1

The Model 750M is a Digital to Analog (D to A) converter designed to operate in conjuction with a Data Industrial flow sensor. The unit can be easily recalibrated in the field by using a Data Industiral Model 900 or Model 950 Digital Display as a tool, and can provide the following analog signals with the simple repositioning of a selection jumper bar.

Selectable Analog Outputs:

1. 4-20ma
2. 0-1 volt
3. 0-5 volts
4. 0-10 volts

The overrange limits and output impedance for each of these output forms can be found under Product Spcification, (Section IV). The D to A converter is a 4-wire design wherein the analog output is isolated from the power supply.

IV. SPECIFICATIONS

A. General

1. Operating Temperature Range:	from -0°C to +55°C
2. Storage Tempreature Range:	from -40°C to +70°C
3. Power Requirements:	12VAC (.2VA) and 24VAC (2VA), 50/60hz
4. Sensor Input Requirements:	from -0 to 8 volts, typical no rise limits, compatable with DATA INDUSTRIAL 220 series sensors
5. Span Adjustment Range:	from -6hz to 70hz
6. Linearity	less than 1%
7. Output Response Time:	6 seconds (typical); 10% to 90% step response
8. Designed Output Ripple:	less than 0.25% of full scale; System output ripple may exceed this value due to the dynamics of the application.

B. 4-20ma Configuration

1. Output Impedance:	greater than 1 Meg Ohm shunted by 1 microfarad
2. Output Compliance:	22 volts (typical); 0-1100 ohms
3. Maximum Output Current:	35ma (max)

C. 0-1 Volt Configuration

1. Output Impedance:	62 ohms (typical) shunted by 1 microfarad
2. Overrange Output Voltage:	2.2 volts (max)

D. 0-5 Volt Configuration

1. Output Impedance:	330 ohms (typical) shunted by 1 microfarad
2. Overrange Output Voltage:	12 volts (max)

E. 0-10 Volts Configuration

1. Output Impedance:	620 ohms (typical) shunted by 1 microfarad
2. Overrange Output Voltage:	22 volts (max)

V. SENSORS

A. Types

Data Industrial provides several basic sensor configurations using the same impeller element. This allows a wider range of applications and pipe sizes. The following is a list of the sensors and application parameters.

- Model 220B - This is the standard brass sensor used in all pipe sizes from 3 inches (76.3mm) to 99.9 inches (2537.5mm) in diameter. It is mounted into the pipe with the use of a welded-on 2" NPT threaded opening. The pressure and temperature ratings are diagramed below:

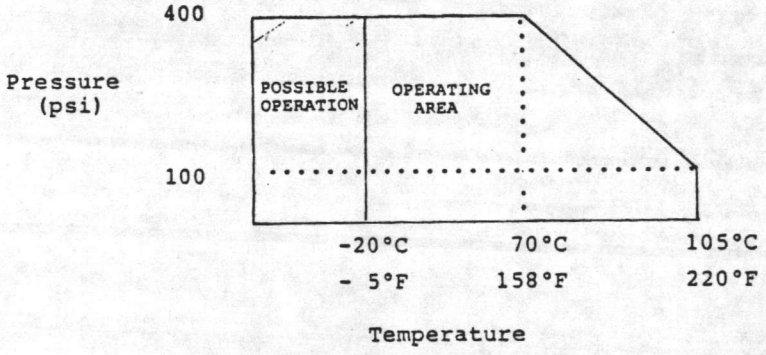

- Model 220SS - This is the same as Model 220B except that the sensor is made from 316 stainless steel. The temperature and pressure characteristics are the same as the Model 220B.
- Model 220P - This consists of a modified PVC tee into which a removable, glass-filled nylon sensor is inserted. Discrete sizes of 1 inch, 1½ inches, 2, 3 and 4 inches are available. Specify the pipe size when ordering by using a dash number such as 220P-1, 220P-1½ or 220P-2, etc. This sensor has the following temperature/pressure rating:

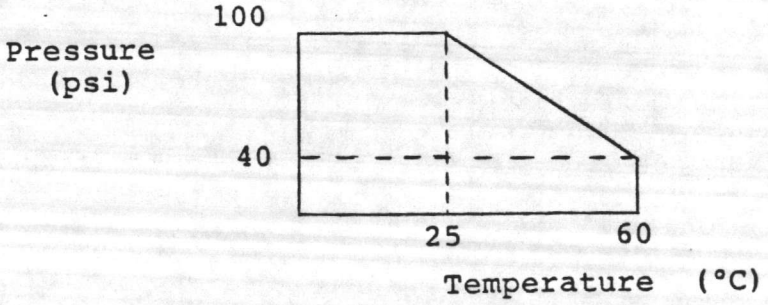

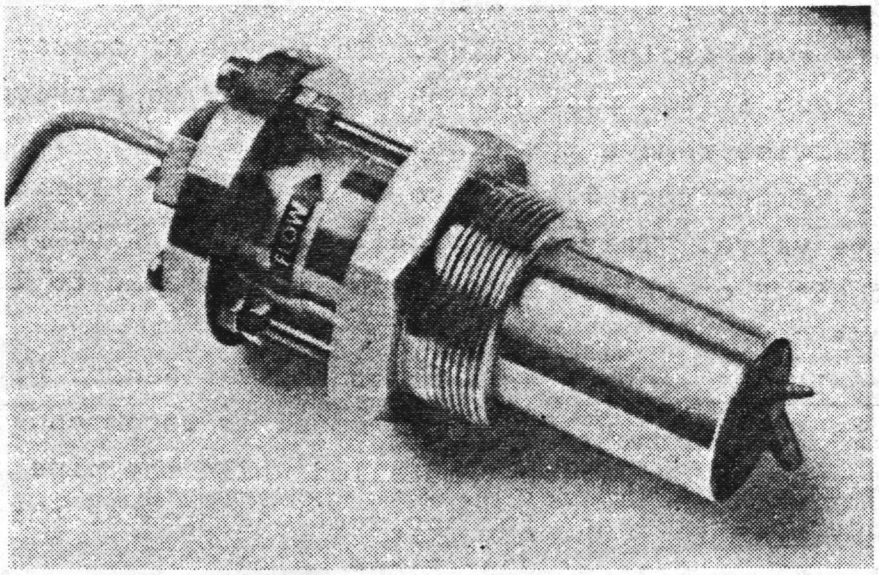

FSN MODEL 220B & 220SS SENSORS

Figure 4A

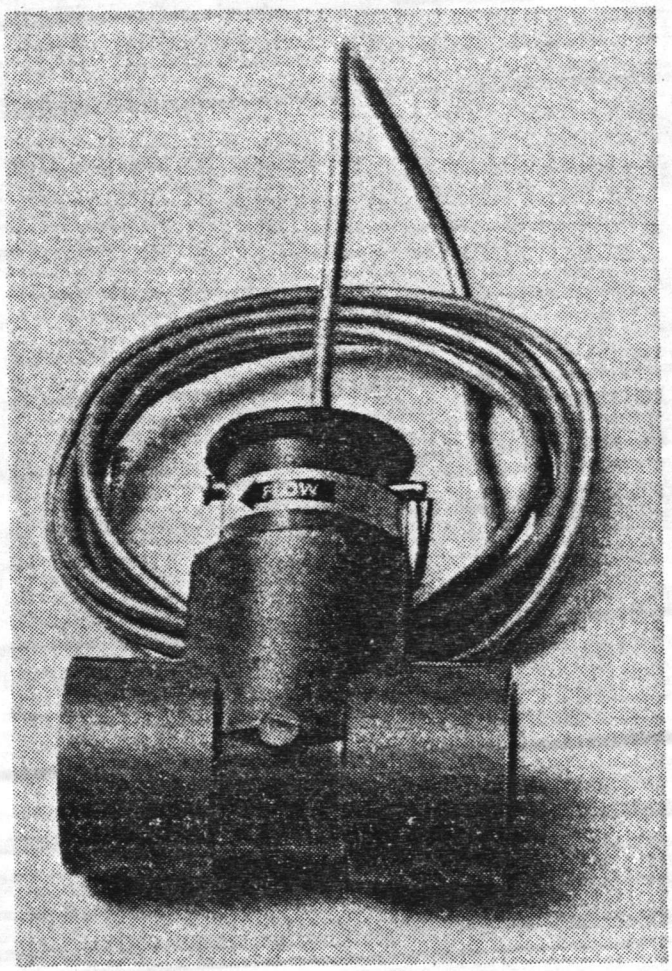

MODEL 220P SENSOR

Figure 4B

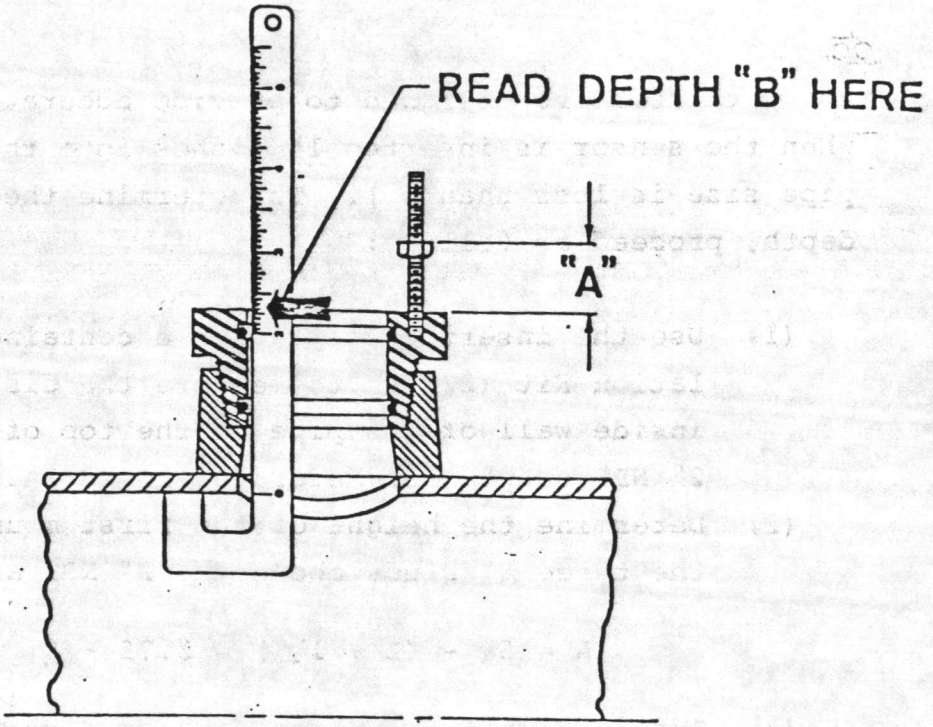

Figure 7 A

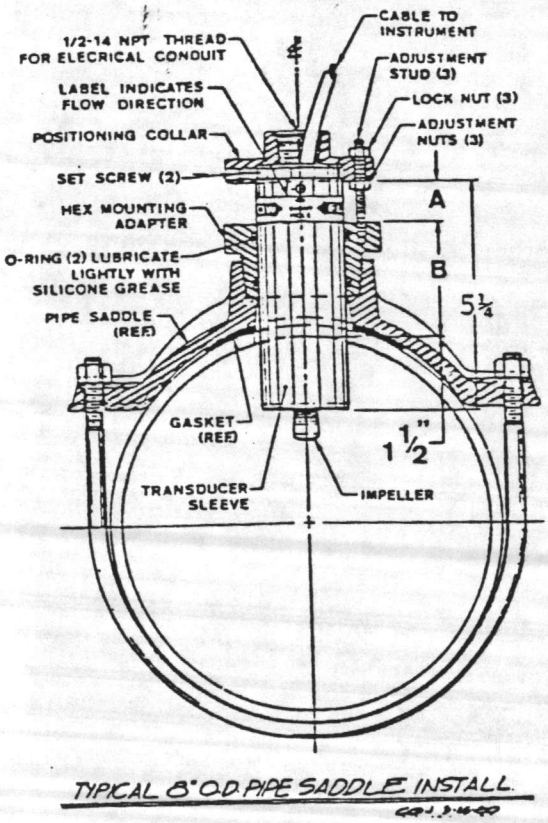

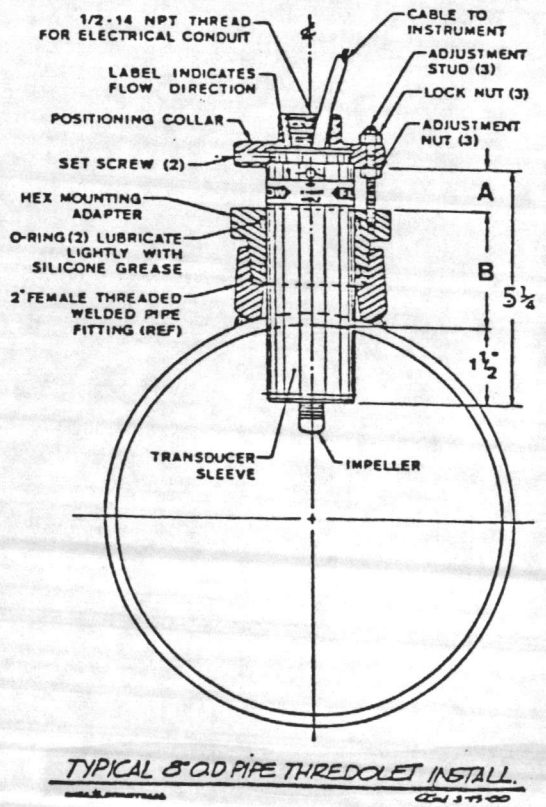

Figure 7 B

AITKEN

WELDING NECK

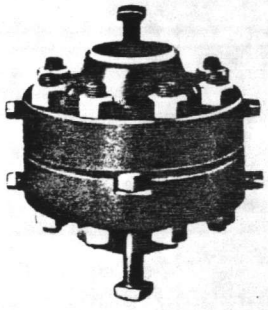

ORIFICE FLANGES

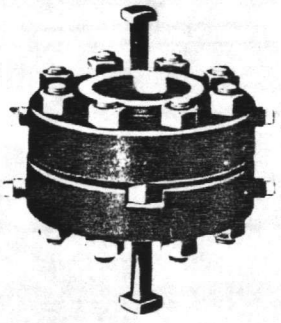

SLIP-ON

Orifice flanges 2" thru 24" 300 lb. and 600 lb. weld neck and slip-on now manufactured by Aitken, Inc.

Manufactured in accordance with ANSI B-16.5 — I.D. tolerances in accordance with A.G.A. committee report No.3.

Complete inventory in carbon steel!

ALLOYS AVAILABLE UPON REQUEST.

ORIFICE PLATES

Aitken Orifice Plates are made in strict accordance with ISA standards using factory polished stainless steel stock. Aitken plates are carefully checked for thickness, flatness and concentricity of bore. After boring, the plate is hand finished by polishing. Each plate is individually inspected and packaged. Immediate delivery can be made using type 304 and 316 stainless steel 1/8" or 1/4" thick. Aitken Orifice Plates are available in both the series 500 and series 520 Paddle-type. Line sizes offered are 1" thru 24".

Pipe Size	CATALOG 500 Aitken Orifice Plates	CATALOG 520 Paddle-Type Orifice Plates			
		125 & 150 ANSI	250 & 300 ANSI	600 ANSI	900 ANSI
1	1.312	2 1/4	2 1/4	2 1/4	3 1/4
1 1/2	2.000	3 1/4	3 1/4	3 1/4	3 1/4
2	2.437	4 1/4	4 1/4	4 1/4	5 1/4
3	3.437	5 1/4	5 1/4	5 1/4	6 1/4
4	4.406	6 1/4	7 1/4	7 1/4	8 1/4
6	6.437	8 1/4	9 1/4	10 1/4	11 1/4
8	8.437	11	12 1/4	12 1/4	14 1/4
10	10.687	13 1/4	14 1/4	15 1/4	17 1/4
12	12.593	16 1/4	16 1/4	18	19 1/4
14	13.750	17 1/4	19 1/4	19 1/4	20 1/4
16	16.000	20 1/4	21 1/4	22 1/4	22 1/4
18	17.9375	21 1/4	23 1/4	24	25
20	20.000	23 1/4	25 1/4	26 1/4	27 1/4
24	24.250	28 1/4	30 1/4	31	32 1/4

Outside diameters shown in inches

CAT. 520

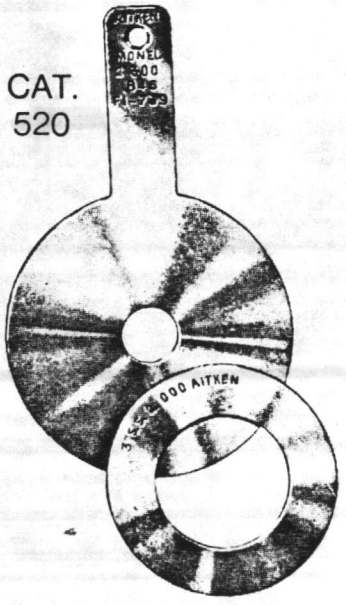

CAT. 500

AITKEN, INC.

3101 HOLMES ROAD • HOUSTON, TEXAS 77051

MAILING ADDRESS: P.O. BOX 14018 • HOUSTON, TEXAS 77021

TELEX 77-5509 • PHONE (713) ~~738-6241~~ 431-1531

Robinson-Halpern

TECHNICAL DATA

152 Series
Industrial Pressure Transducer

Features
- ±0.5% static error band
- Infinite Resolution
- NEMA 1 housing
- Economical
- Long term stability
- Low power consumption
- Zero and span adjustments
- 2 wire, 4-20mA available
- Internal voltage regulator
- Polarity reversal protection

Applications
- Petrochemical and process control installations
- Engine diagnostic testing
- Mass transit and shipboard applications
- Flow and level measurement
- HVAC • OEM

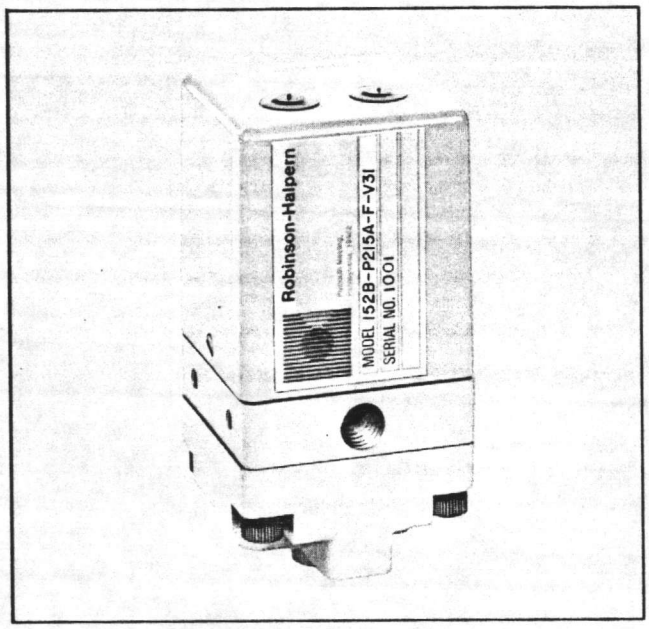

General Description

The Model 152 Pressure Transducer meets the requirements for a general purpose, reliable and economic pressure transducer for industrial and process control installations. It is contained in a NEMA 1 cast aluminum housing, and is designed so that the transducer can be easily repaired without degrading its integrity..

This transducer measures pressure of liquids or gases and is available in 13 ranges from 1.5 to 300 psi full scale gage, differential or absolute (except 1.5 psia). The static error band is ±0.5% of full scale. The operating temperature range is −40° to +176°F and compensated from +25° to +150°F. Zero and span adjustments are accessible externally.

Operation

When pressure is applied to the Ni-Span-C capsule its motion is directly transmitted to the ferromagnetic core of a linear variable differential transformer (LVDT). Resolution is infinite. The high frequency AC required by the LVDT is generated by an internal oscillator. The AC signal is demodulated and a buffer-amplifier provides the DC output. An internal voltage regulator permits operation from an unregulated source and features polarity reversal protection.

Model 152B

The Model 152B can be operated from either of two DC voltage input ranges with a choice of four low voltage DC outputs.

Model 152C 2 Wire, 4-20mA Output

The Model 152C transducer behaves like a current controller that varies with input pressure. At zero pressure, or low end of the range, the loop current is 4mA. As the pressure increases, the current increases until it reaches 20mA at the high end of the range.

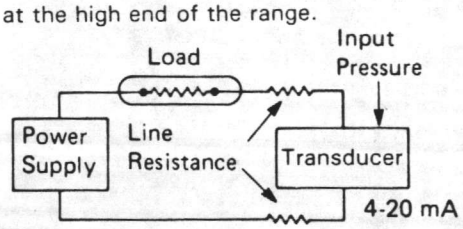

The transducer will operate from supply voltages of 12 to 38 VDC. With a nominal 24 volt supply, the maximum load is 600 ohms. See chart for maximum allowable loads with other supply voltages. A 2 wire system simplifies installation and reduces cost. Refer to Model 152S data sheet for intrinsically safe transducers.

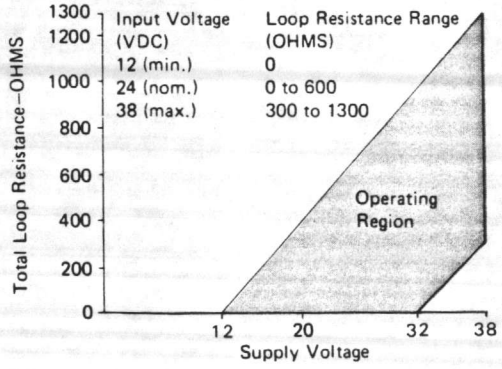

ROBINSON-HALPERN COMPANY
One Apollo Rd. Plymouth Meeting Pa. 19462

215-825-9200
TWX #510-660-8637 (ROBHALCOPMTG)

Specifications

STATIC ERROR BAND

±0.5% F.S. includes linearity (best straight line), hysteresis and repeatability.

TEMPERATURE RANGE

Compensated:	+25° to +150°F. (− 4° to +65°C)
Operating:	−40° to +176°F. (−40° to +80°C)
Storage:	−65° to +185°F. (−55° to +85°C)

TEMPERATURE EFFECT

Over compensated range
Zero: ±0.02% F.S. per °F.
Span: ±0.02% per °F.

OVERPRESSURE RATINGS

Proof Pressure: 150% of rated pressure
Static Pressure: 450 psi max.

INPUT VOLTAGE EFFECT

A 1% input voltage change will cause less than a 0.005% change in output.

OUTPUT IMPEDANCE

1.0 ohm, nominal, for voltage output units.
1.0 megohm, nominal, for current output units.

RIPPLE

0.5% F.S. RMS, max.

ZERO AND SPAN ADJUSTMENT RANGE

±5% F.S. each, nominal.

WETTED PARTS

Gage or Absolute: Ni-Span-C, solder, aluminum and Buna-N.
Differential: Same as above plus 316 SST and Alloy 52.

ELECTRICAL CONNECTIONS

22 AWG PVC Cable, 18 inches long.

NET WEIGHT

12 oz. (340 gm).

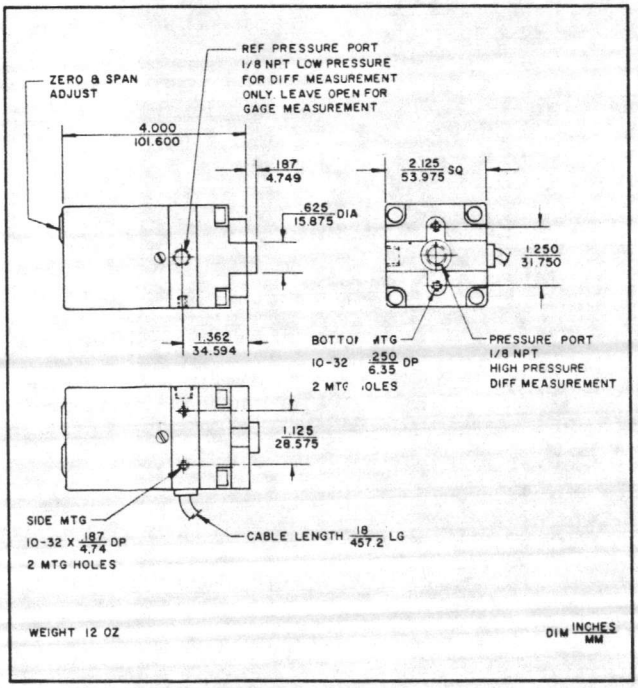

Specifications subject to change without notice.

OPTIONS

A	Electrical Connector attached to cable, male Type PTO6E-10-6P (SR).
C( )	Extra cable length. Add number of feet required in parenthesis after option letter.
R	Improved static error band of ±.25% 3-15 and 0-15 psi ranges only.
T	Improved temperature compensation to provide ±0.01% F.S. per°F for Zero or Span over the compensated range.

Ordering Information

Select pressure range and corresponding model number suffix. Add letter "D" for gage and differential or "A" for absolute. Choose input and output and options required. Add suffixes to the model number together with option letters alphabetically. 0-1.5 psia not available.

PRESSURE RANGES

Range, Psig	Model No. Suffix	Range, Psig	Model No. Suffix
0-1.5	P015	0-100	P210
0-3	P030	0-150	P215
0-6	P060	0-200	P220
0-10	P110	0-300	P230
0-15	P115		
3-15	P905	Inches Hg.	
0-30	P130	0-30 (Vac)	H995
0-60	P160		

POWER INPUT — MODEL 152B

24 to 32 VDC, calibrated at 28 VDC	F
12.0 to 25 VDC, calibrated at 15 VDC	G

DC current drain, 5mA maximum.

OUTPUT AND LOAD — MODEL 152B

0-1 volt into 5K min.	V31
0-5 volt into 5K min.	V35
0-10 volt into 5K min. (15VDC minimum input required)	V41
1-5 volt into 5K min.	V95

2 Wire, 4-20 mA Output—Model 152C

See chart for input voltage vs. load characteristics. Complete model number is 152C-PXXXX, where "XXXX" represents pressure range to be chosen. See example.

Examples

152B — P215A — F — V31
- 152B: Pressure Transducer
- P215A: Pressure Range 150 psi, absolute
- F: Input 24 to 32 VDC
- V31: Output 0-1 VDC

152C — P115D — A
- 152C: Pressure Transducer 2 wire, 4-20mA Output
- P115D: Pressure Range 0-15 psi, gage
- A: Connector (Option)

AITKEN

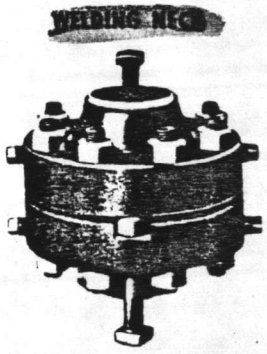

ORIFICE FLANGES

Orifice flanges 2" thru 24" 300 lb. and 600 lb. weld neck and slip-on now manufactured by Aitken, Inc.

Manufactured in accordance with ANSI B-16.5 — t[illegible] tolerances in accordance with A.G.A. committee report No. 3

Complete inventory in carbon steel!

ALLOYS AVAILABLE UPON REQUEST.

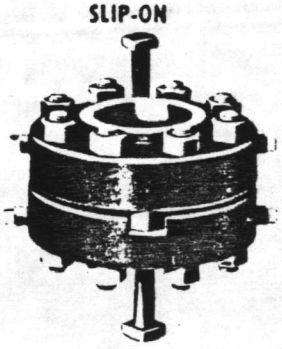

ORIFICE PLATES

Aitken Orifice Plates are made in strict accordance with ISA standards using factory polished stainless steel stock. Aitken plates are carefully checked for thickness, flatness and concentricity of bore. After boring, the plate is hand finished by polishing. Each plate is individually inspected and packaged. Immediate delivery can be made using type 304 and 316 stainless steel 1/8" or 1/4" thick. Aitken Orifice Plates are available in both the series 500 and series 520 Paddle-type. Line sizes offered are 1" thru 24".

Pipe Size	CATALOG 500 Aitken Orifice Plates	CATALOG 520 Paddle-Type Orifice Plates			
		125 & 150 ANSI	250 & 300 ANSI	600 ANSI	900 ANSI
1	1.312	2	2⅛	2	3⅛
1½	2.000	3	3⅛	3	3⅛
2	2.437	4	4⅛	4	5⅛
3	3.437	5	5⅛	5	6⅛
4	4.406	6	7⅛	7	8⅛
6	6.437	8	9⅛	10	11⅛
8	8.437	11	12⅛	12	14⅛
10	10.687	13	14⅛	15	17⅛
12	12.593	16	16⅛	18	19⅛
14	13.750	17	19⅛	19	20⅛
16	16.000	20	21⅛	22	22⅛
18	17.9375	21	23⅛	24	25
20	20.000	23	25⅛	26	27⅛
24	24.250	28	30⅛	31	32⅛

Outside diameters shown in inches

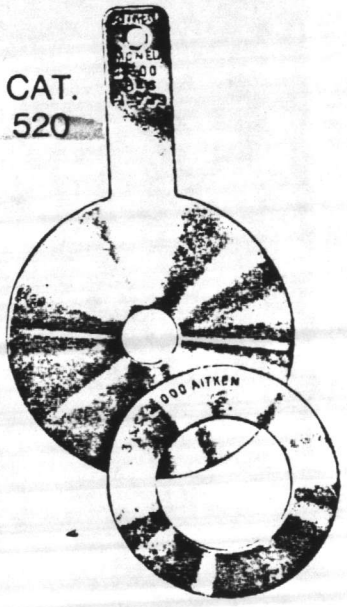

AITKEN, INC.

3101 HOLMES ROAD • HOUSTON, TEXAS 77051

MAILING ADDRESS: P.O. BOX 14018 • HOUSTON, TEXAS 77021

TELEX 77-5509 • PHONE (713) ~~738-6241~~ 431-1531

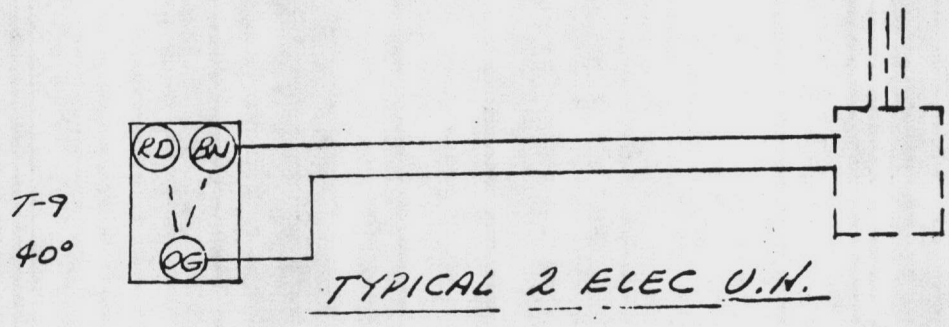

TYPICAL 2 ELEC U.N.

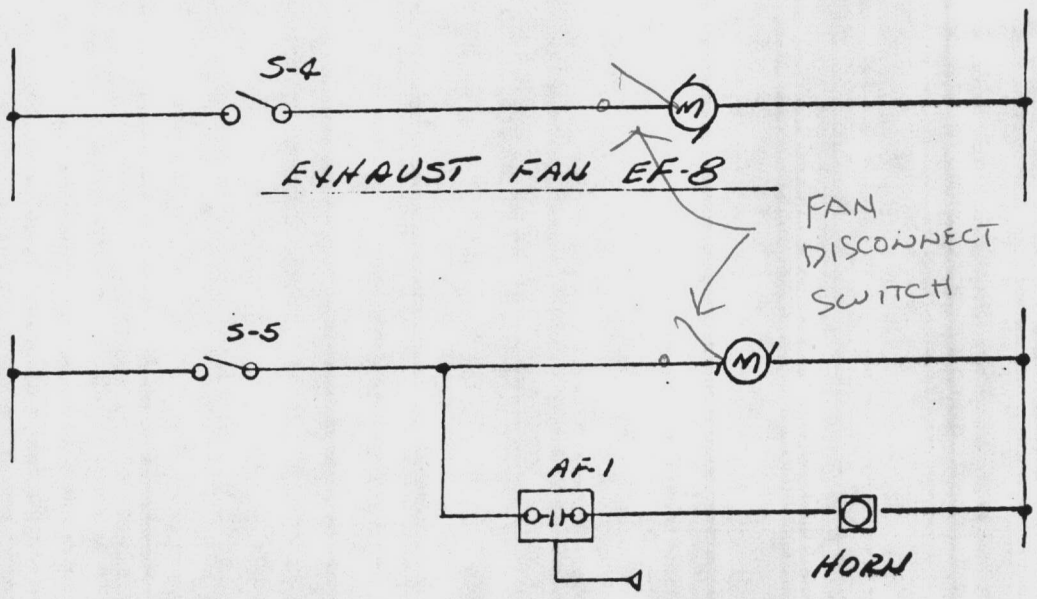

EXH. FAN EF-7

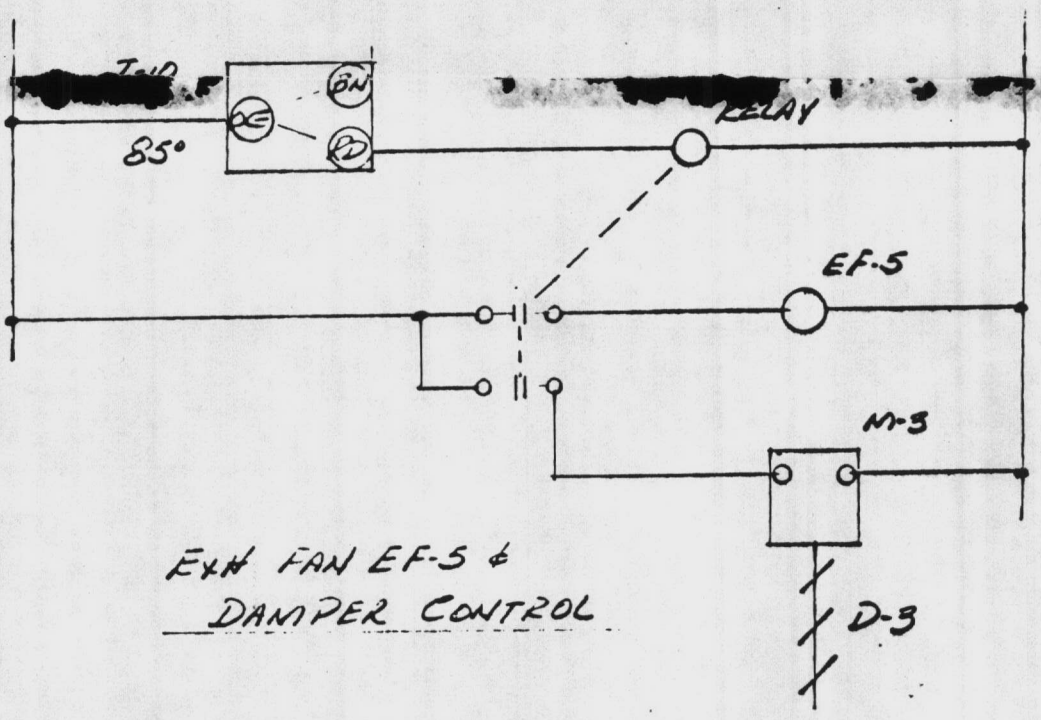

EXH FAN EF-5 & DAMPER CONTROL

LIFT STATION CONTROLS

GENERAL NOTES FOR CONTROL POWER:

FOR 115 VOLT MOTORS USE POWER CIRCUIT FOR 120 VOLT CONTROL SOURCE

FOR 200 VOLT AND 460 VOLT MOTORS USE EITHER CONTROL TRANSFORMERS OR SPARE 20-AMPERE CIRCUIT BREAKERS IN NEAREST PANELBOARDS FOR 120-VOLT CONTROL SOURCE.

DT.

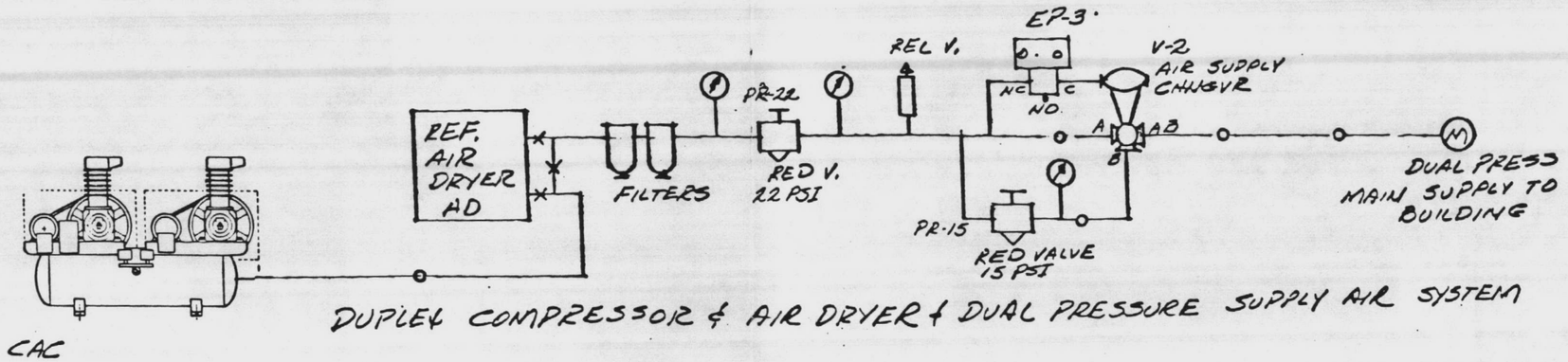

DUPLEX COMPRESSOR & AIR DRYER & DUAL PRESSURE SUPPLY AIR SYSTEM

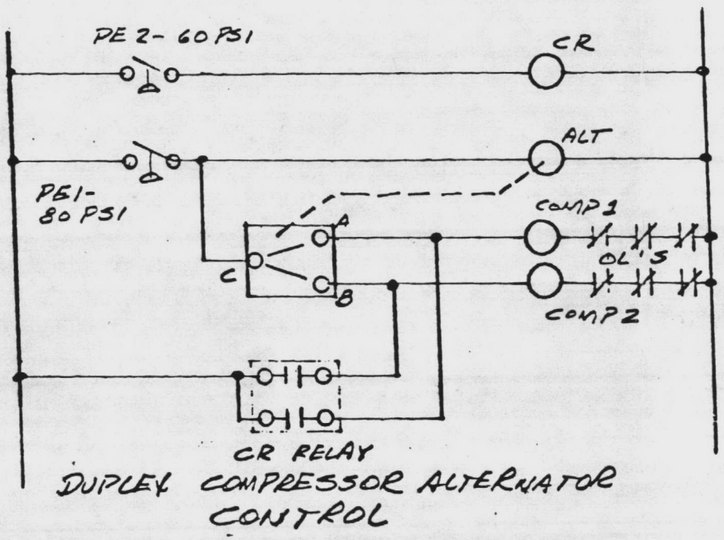

DUPLEX COMPRESSOR ALTERNATOR CONTROL

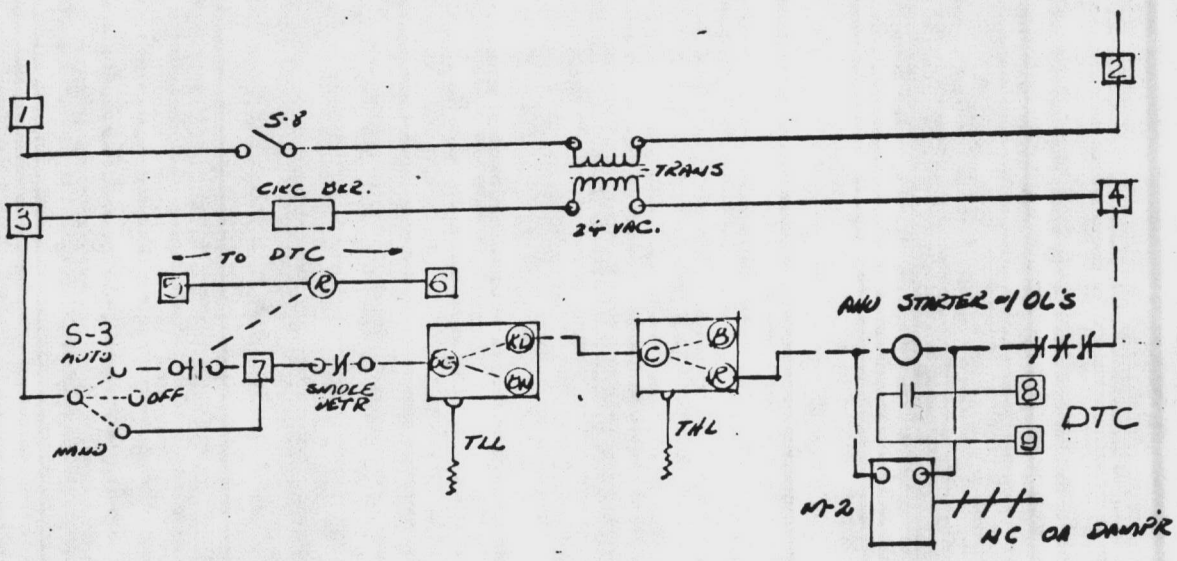

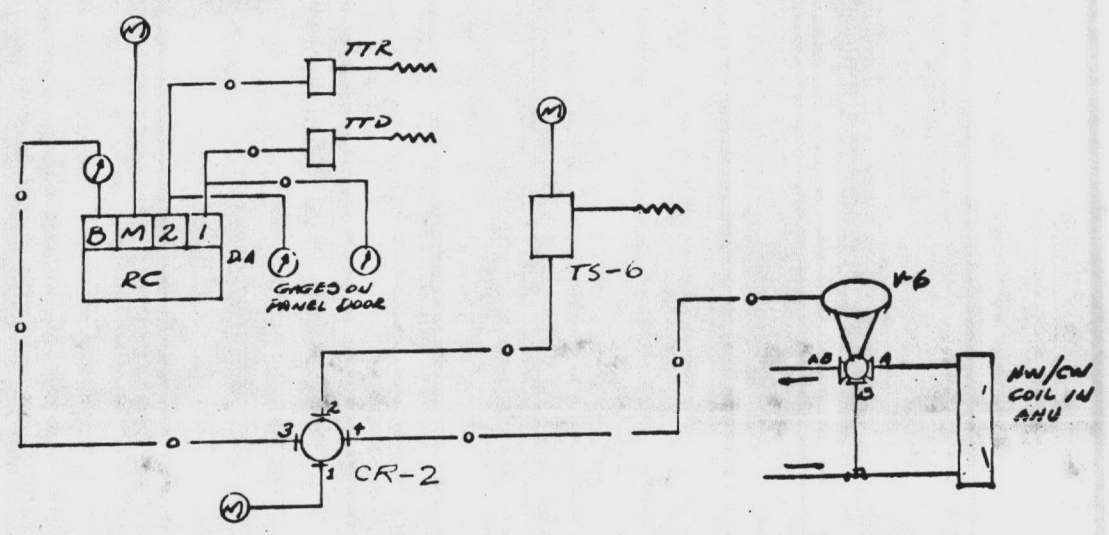

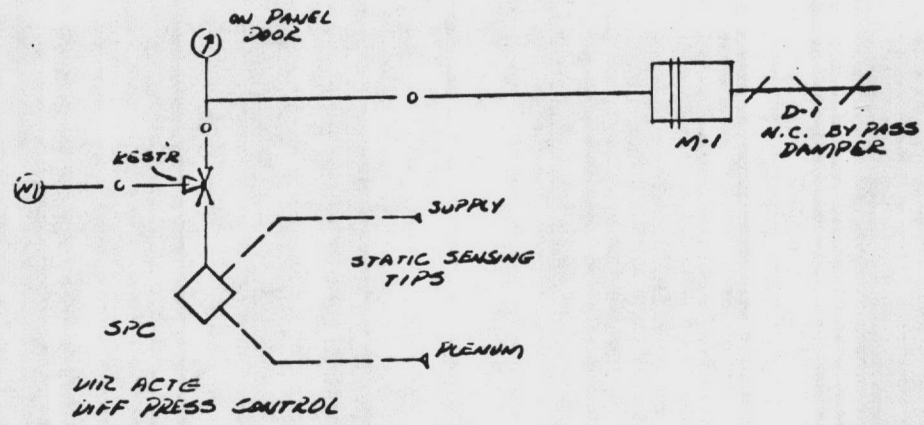

AHU CONTROLS - TYPICAL 6 PER BARRACK

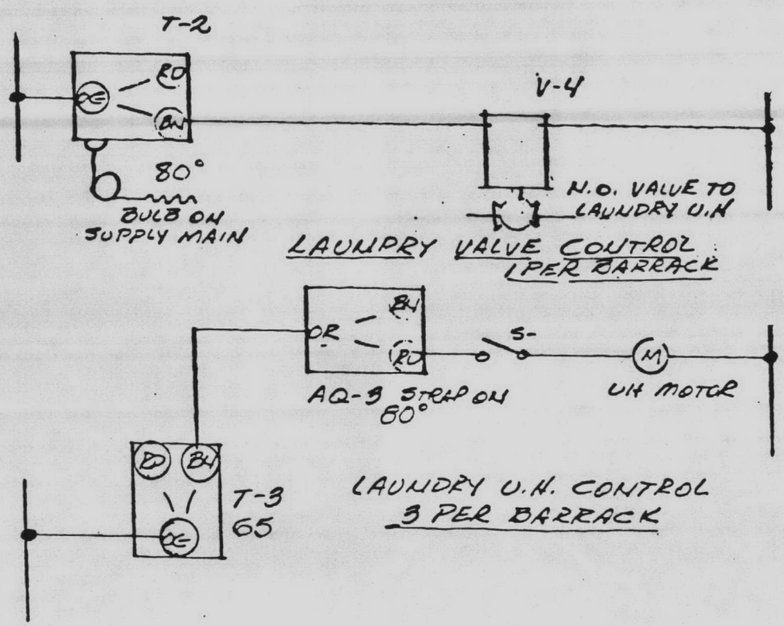

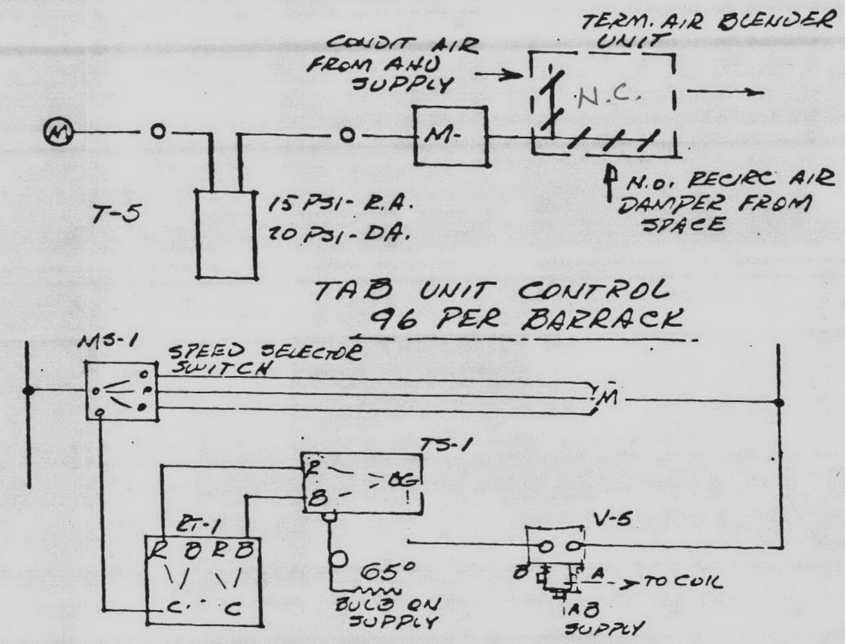

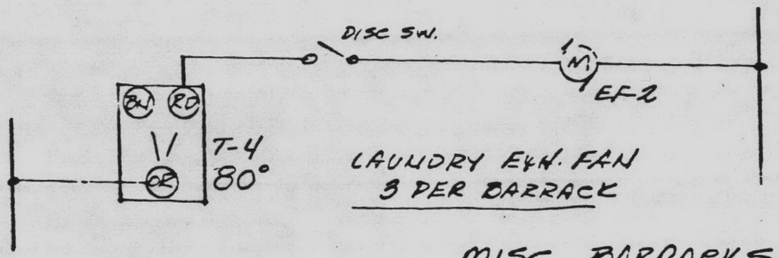

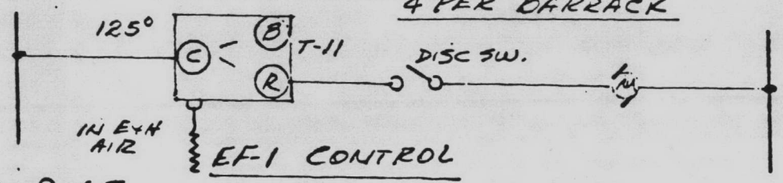

MISC BARRACKS CONTROLS

DT.

4/15

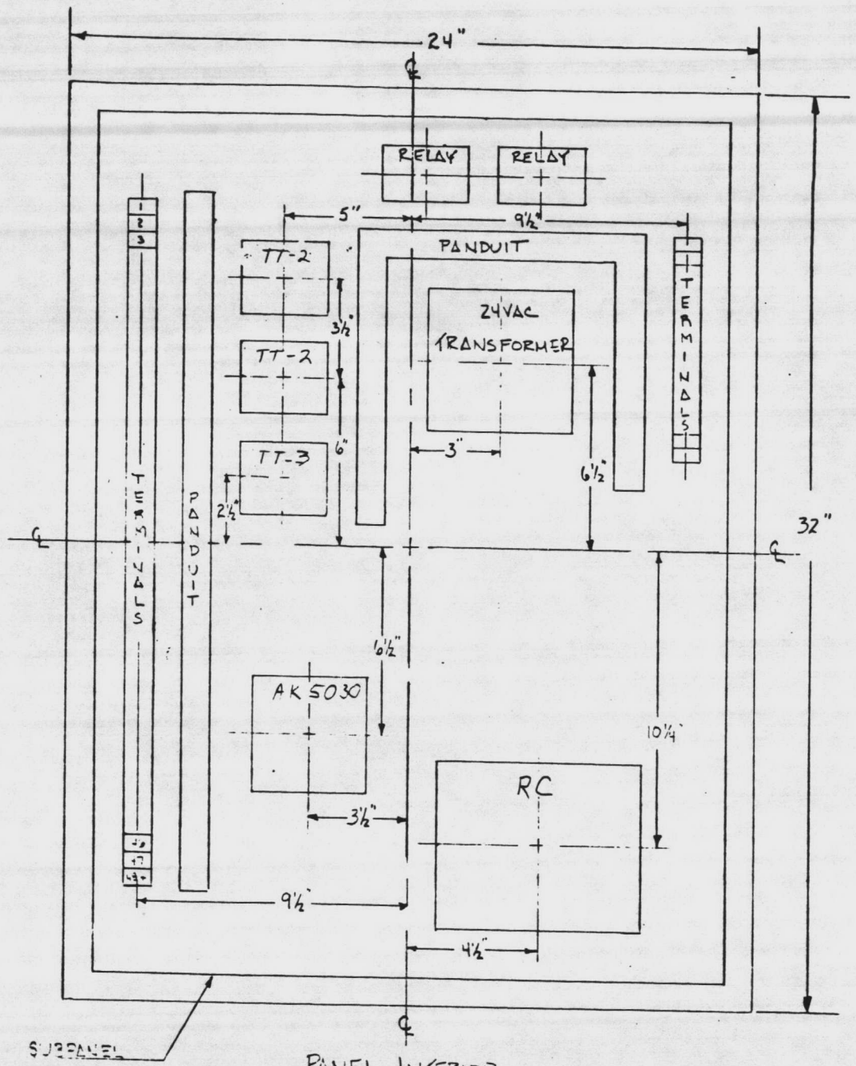

PANEL INSIDE

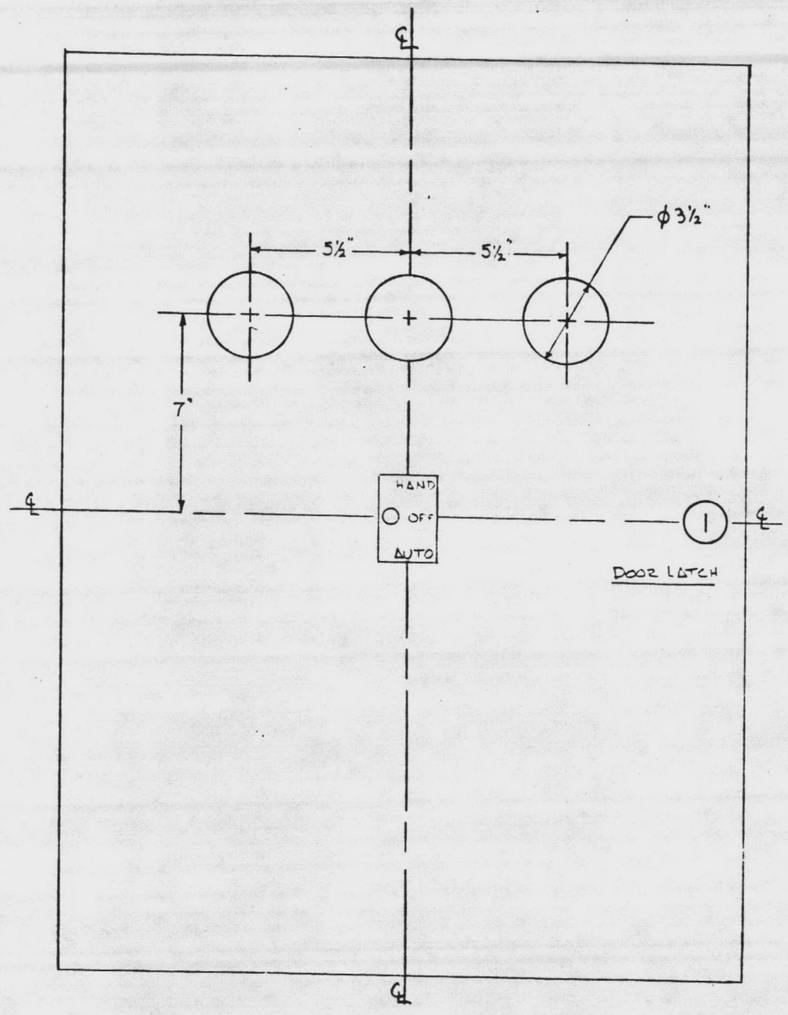

PANEL DOOR

ENABLES AHU CONTROL PANEL

5/15

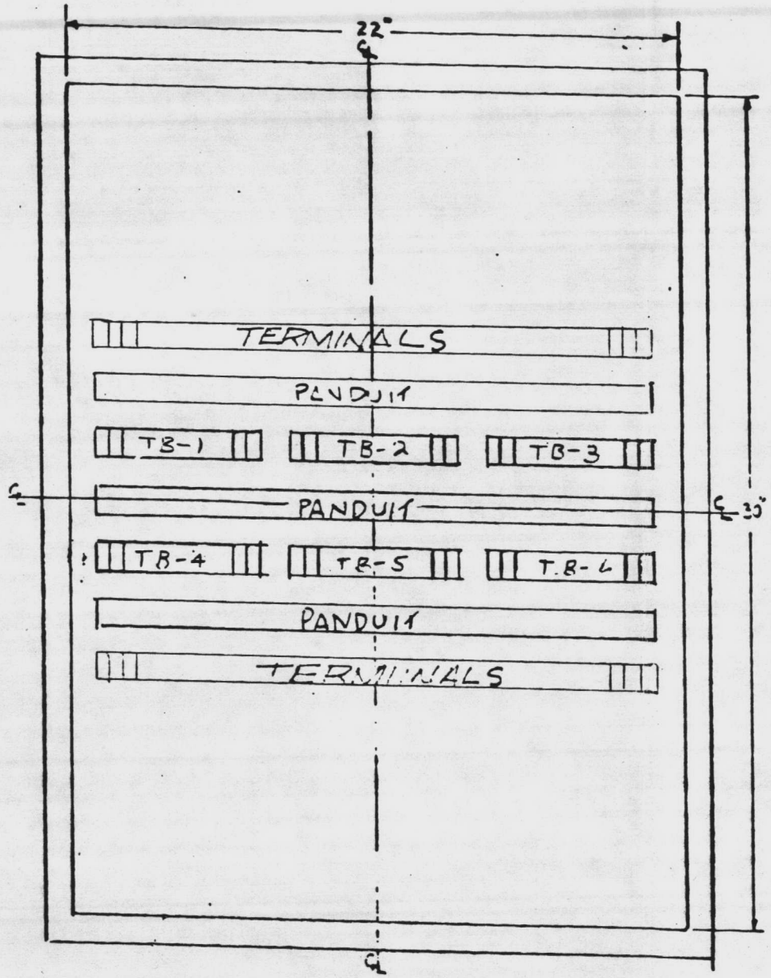

PANEL INTERIOR

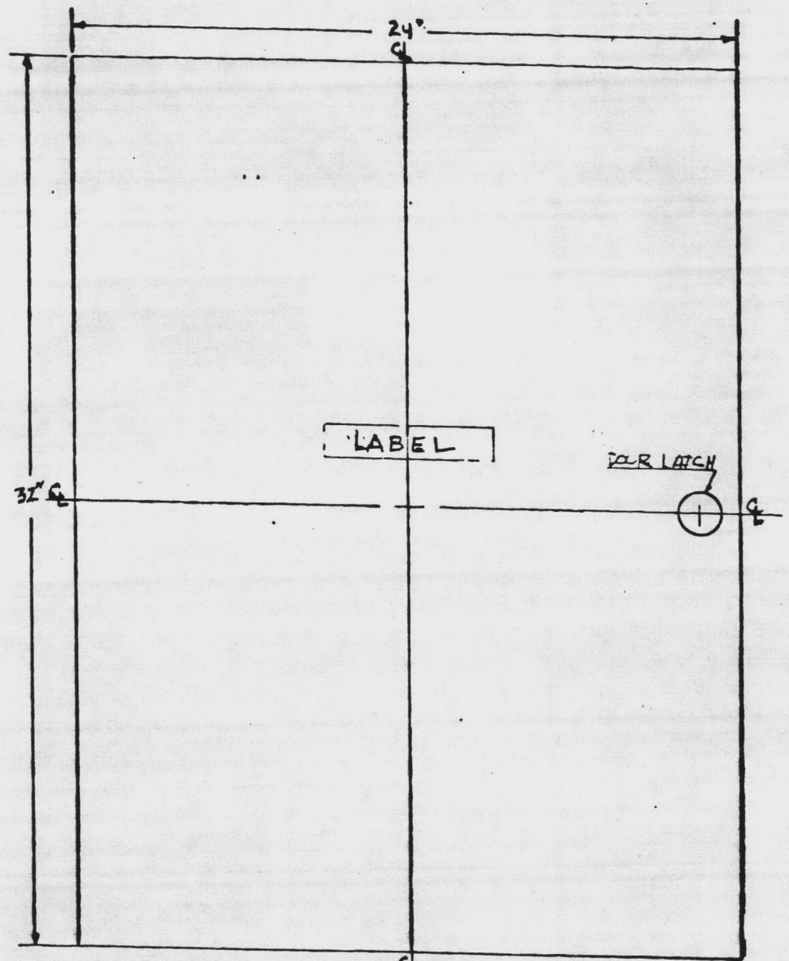

PANEL DOOR

BARRACKS D/C

6/15

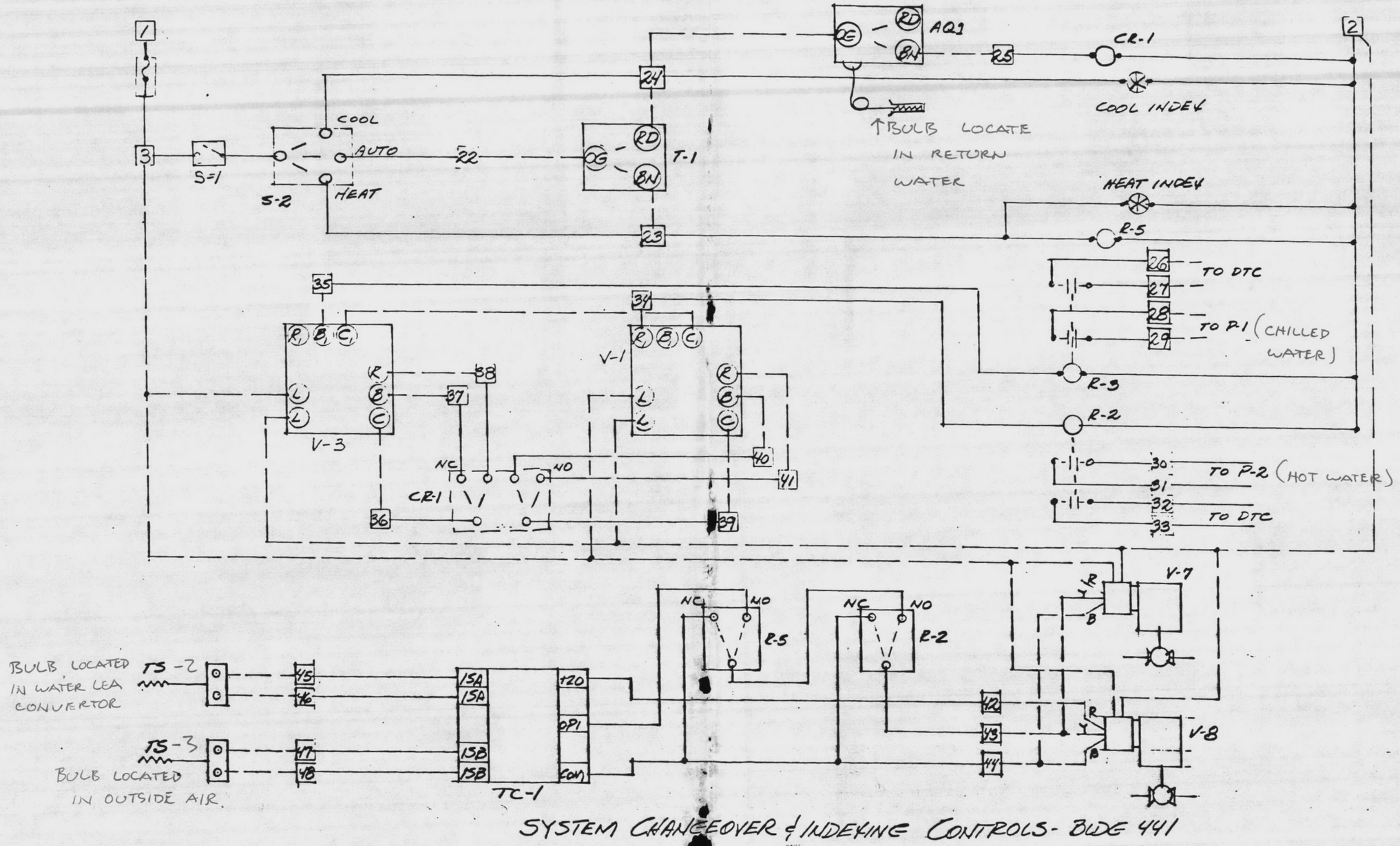

SYSTEM CHANGEOVER & INDEXING CONTROLS - BLDG 441

S.L.

7/15

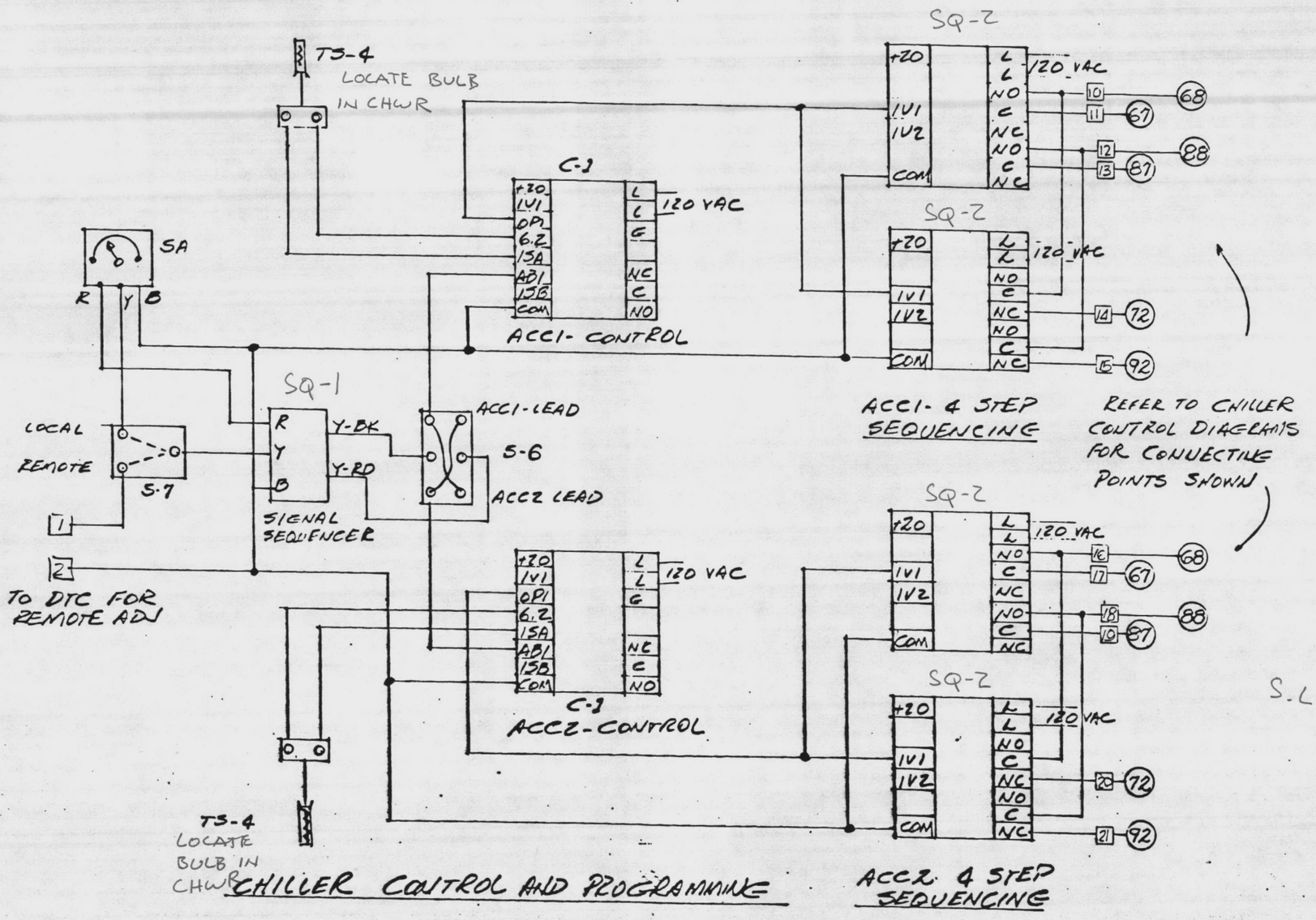

CHILLER CONTROL AND PROGRAMMING

8/15

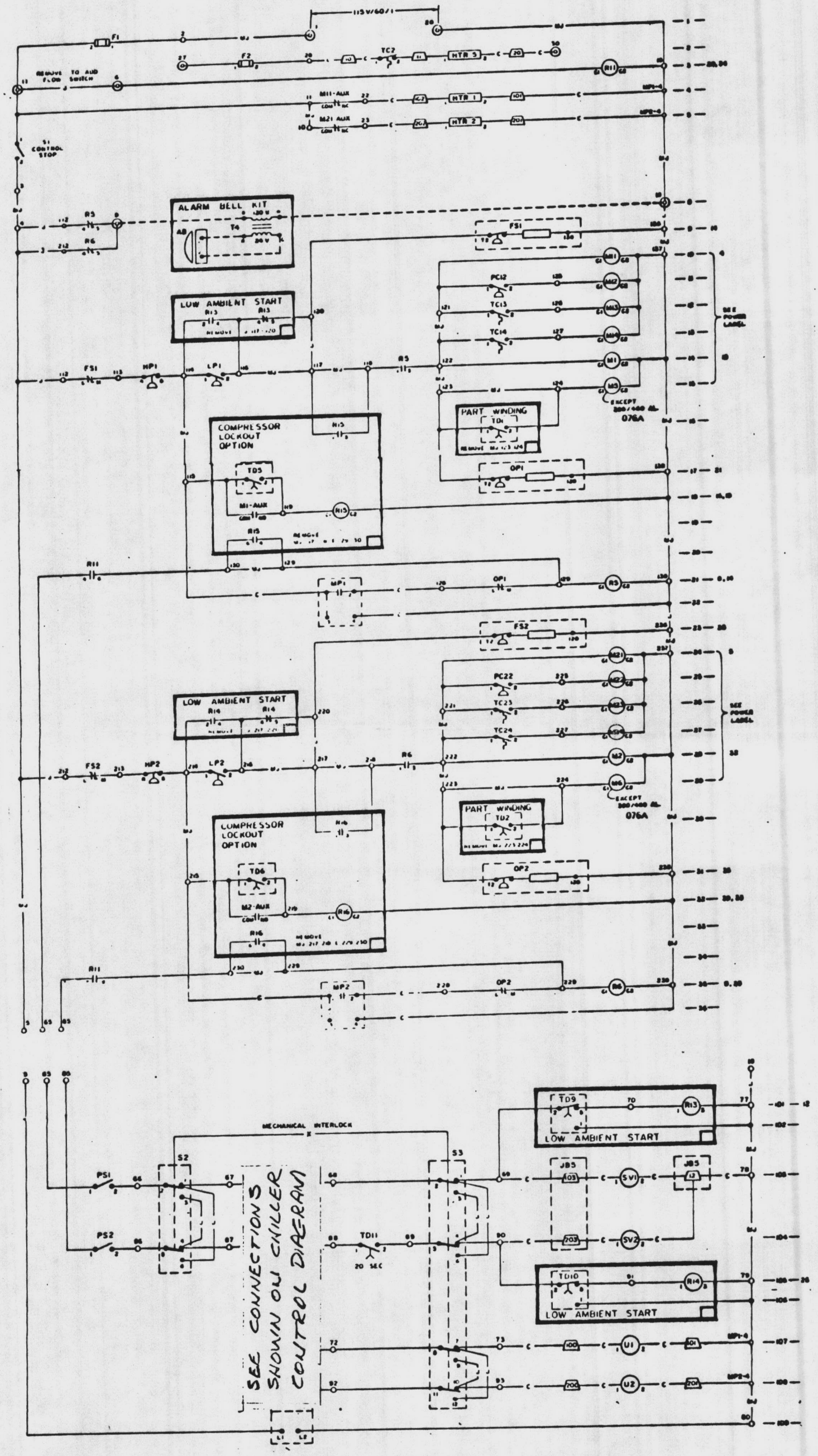

INTERNAL CHILLER CONTROL DIAGRAM

S1/6

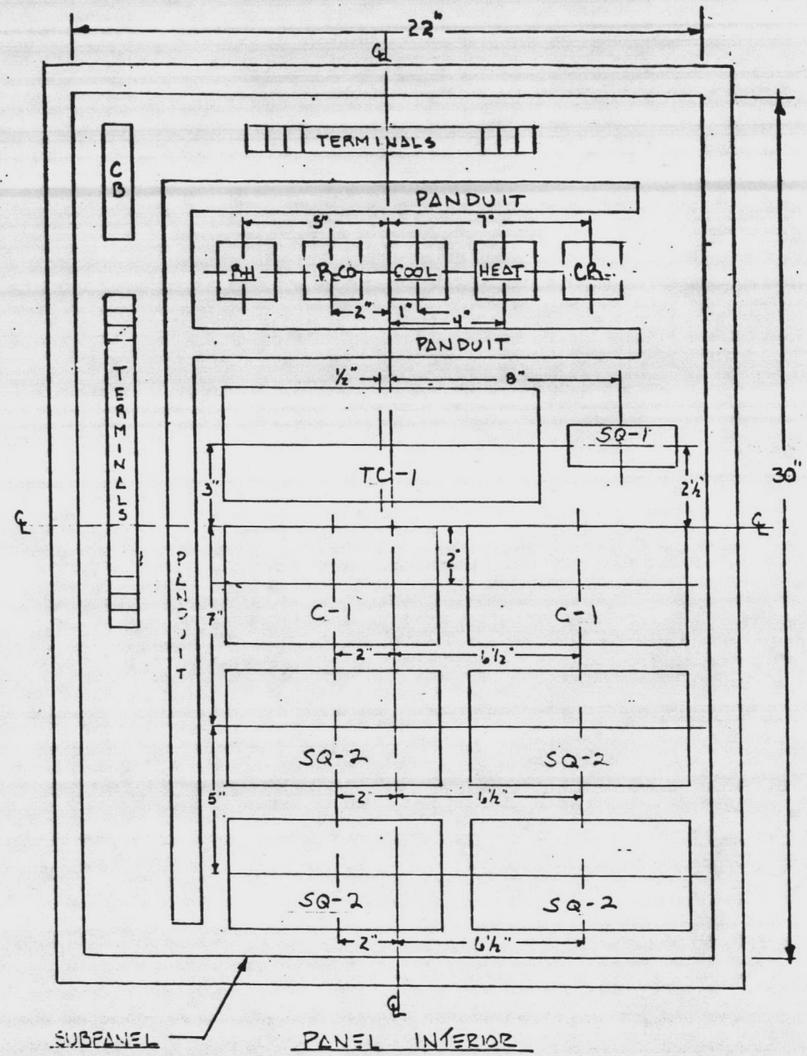

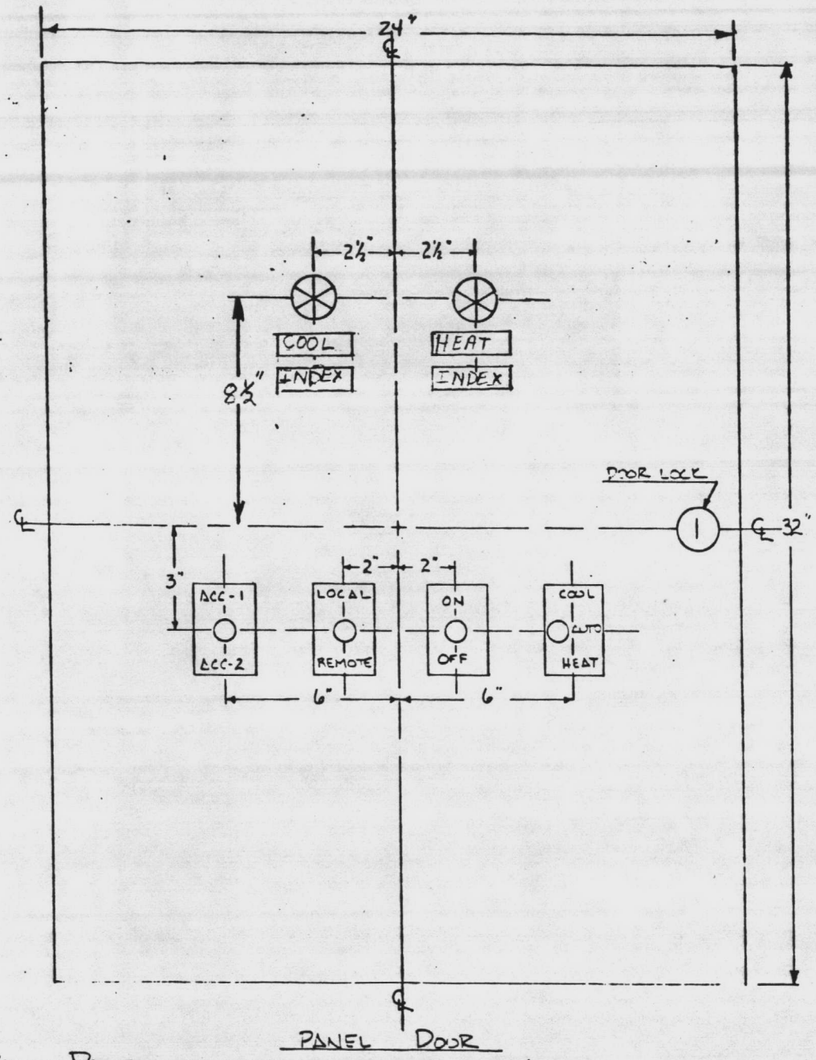

BUILDING #441 CONTROL PANEL

10/15

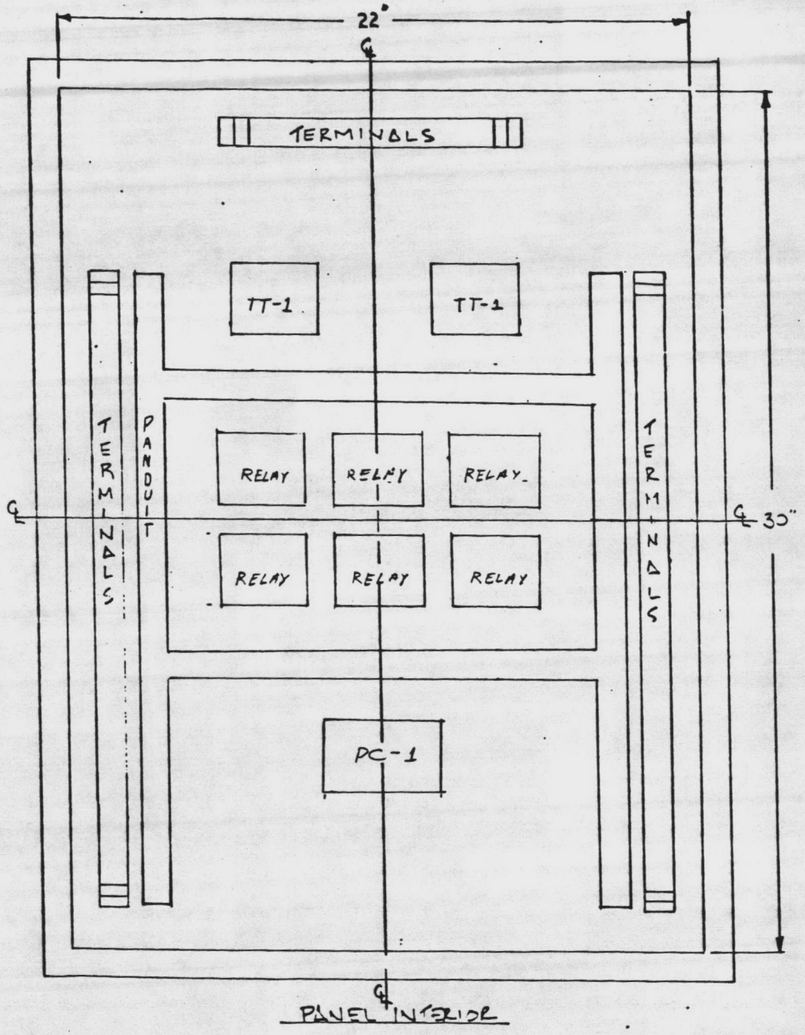

PANEL INTERIOR

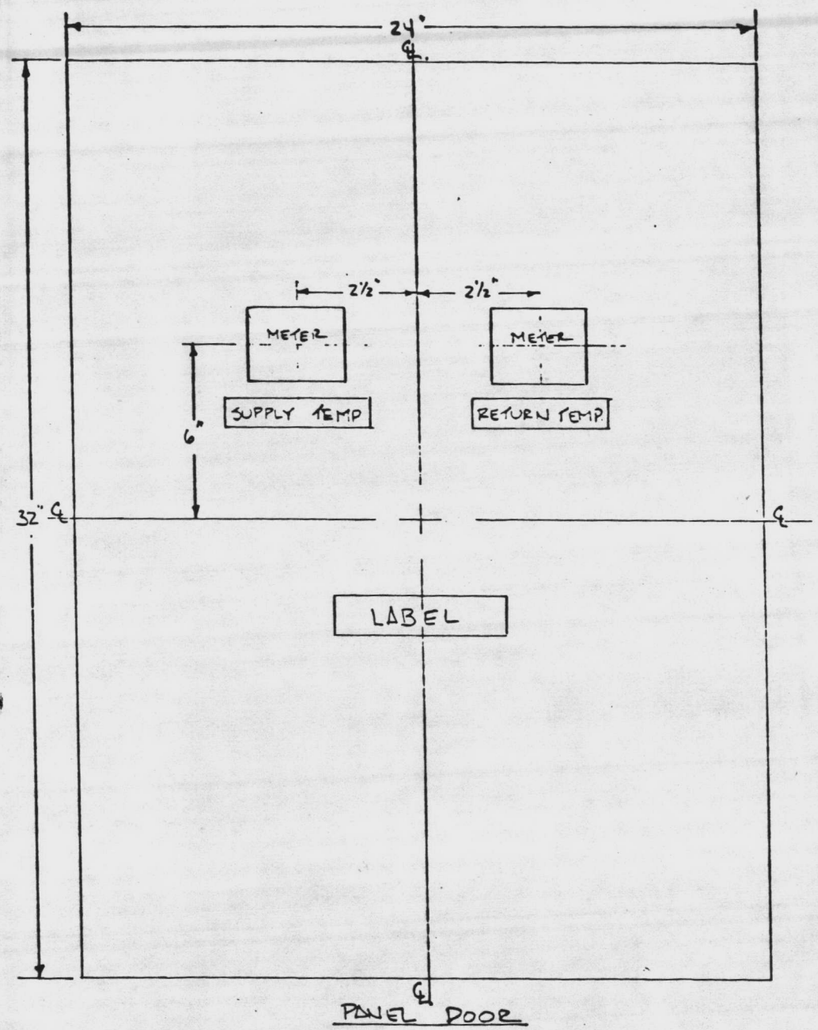

PANEL DOOR

BUILDING #441 INTERMEDATE PANEL

11/15

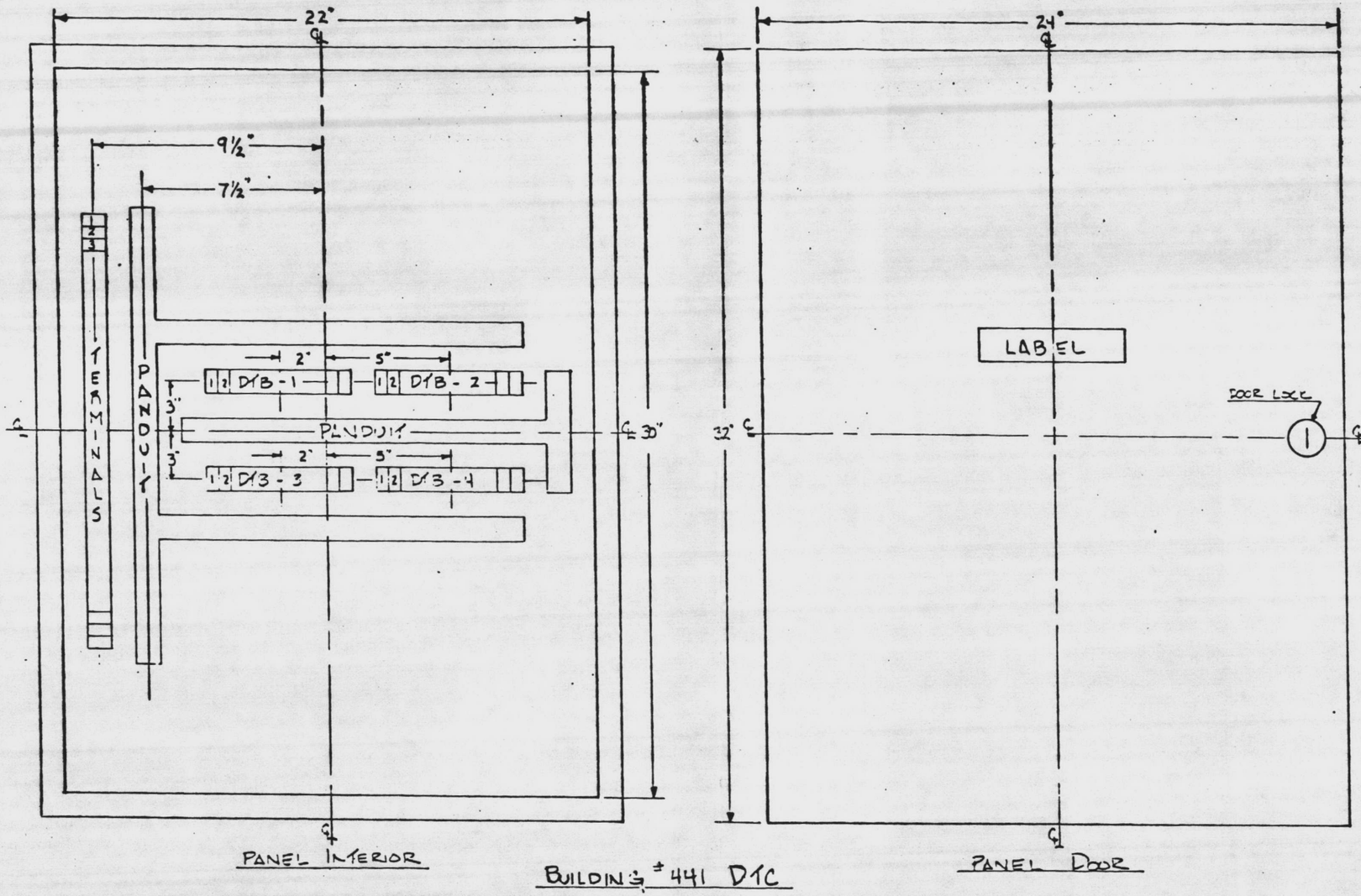

PANEL INTERIOR

BUILDING # 441 D1C

PANEL DOOR

12/15

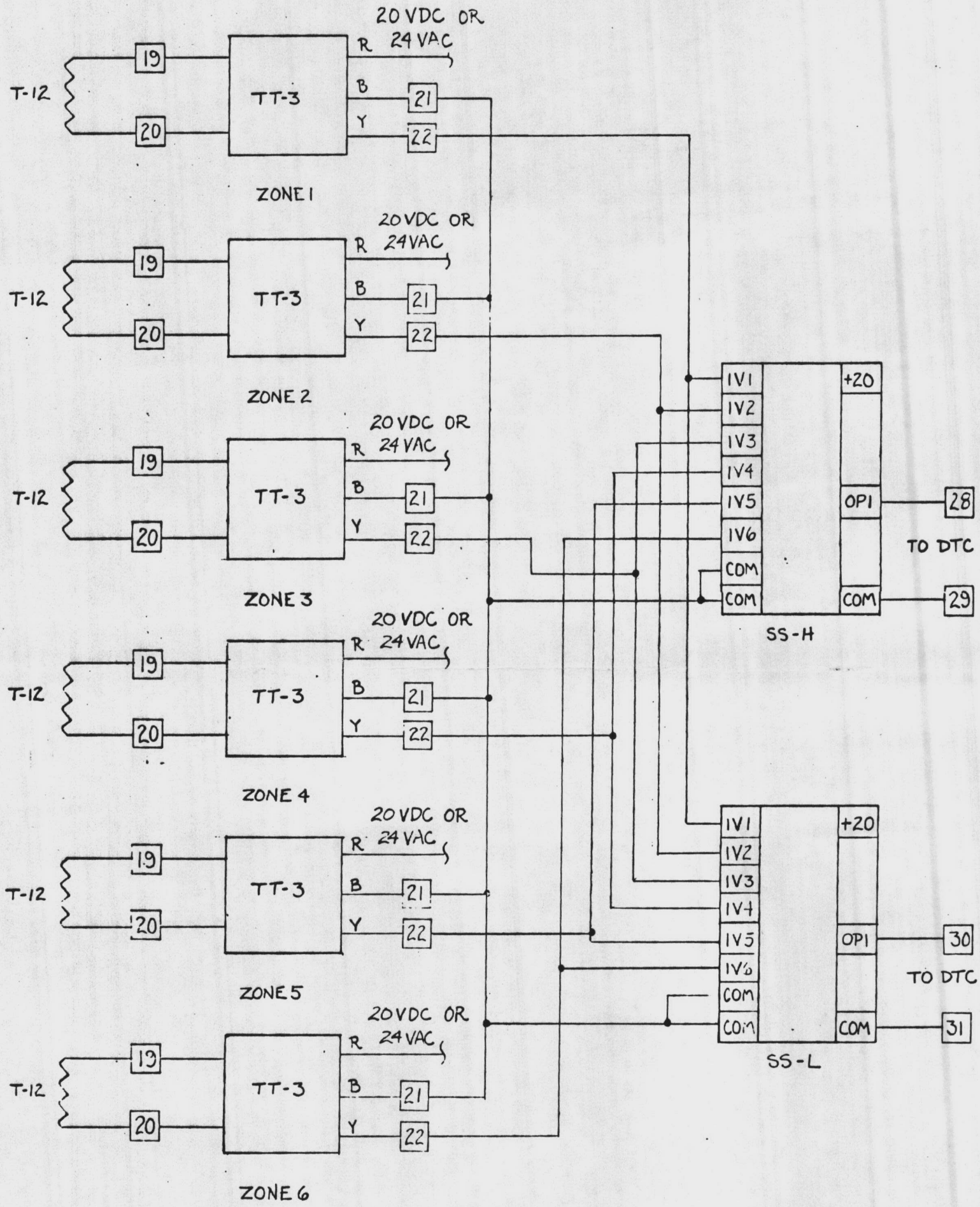

BARRACKS EMCS

TYPICAL OF 5

13/15

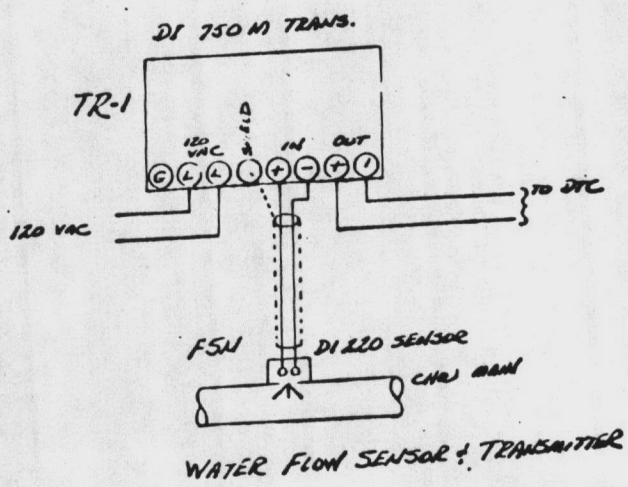

NOTE!
REFER TO PANEL DIAGRAMS & SCHEDULES FOR TERMINAL NUMBERS

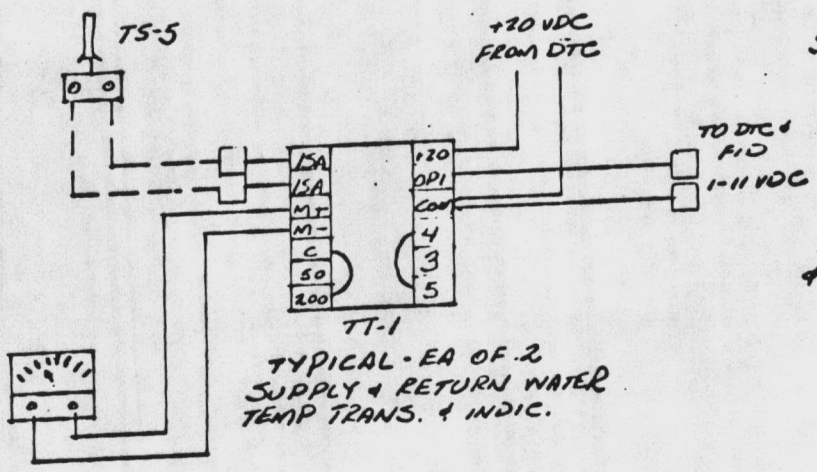

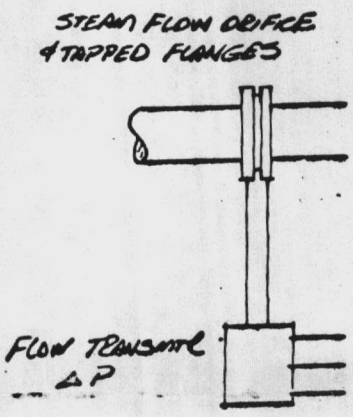

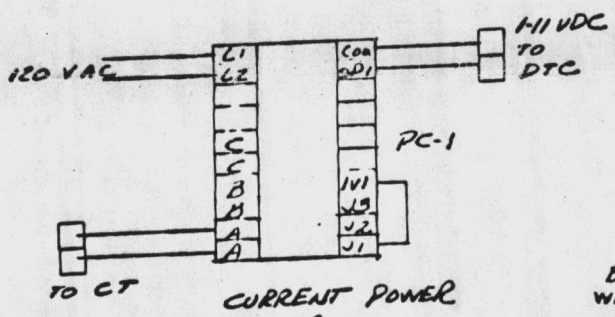

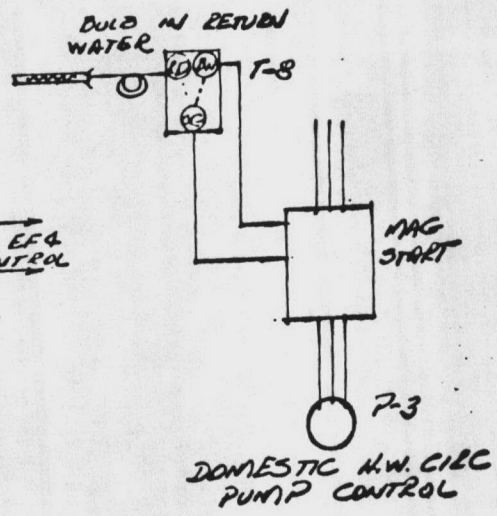

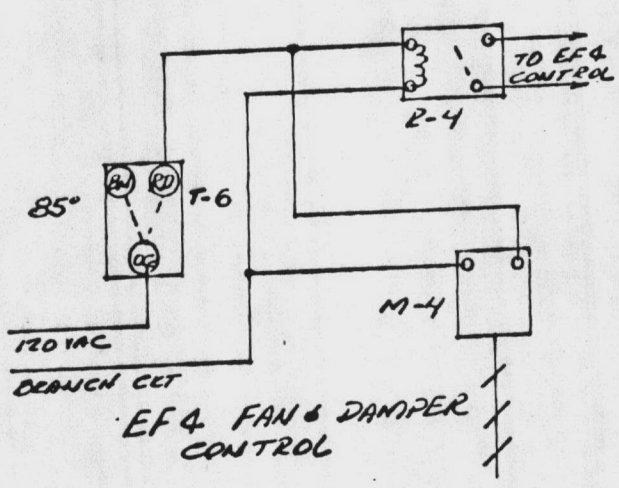

BLDG # 441 EMCS

5/1/91

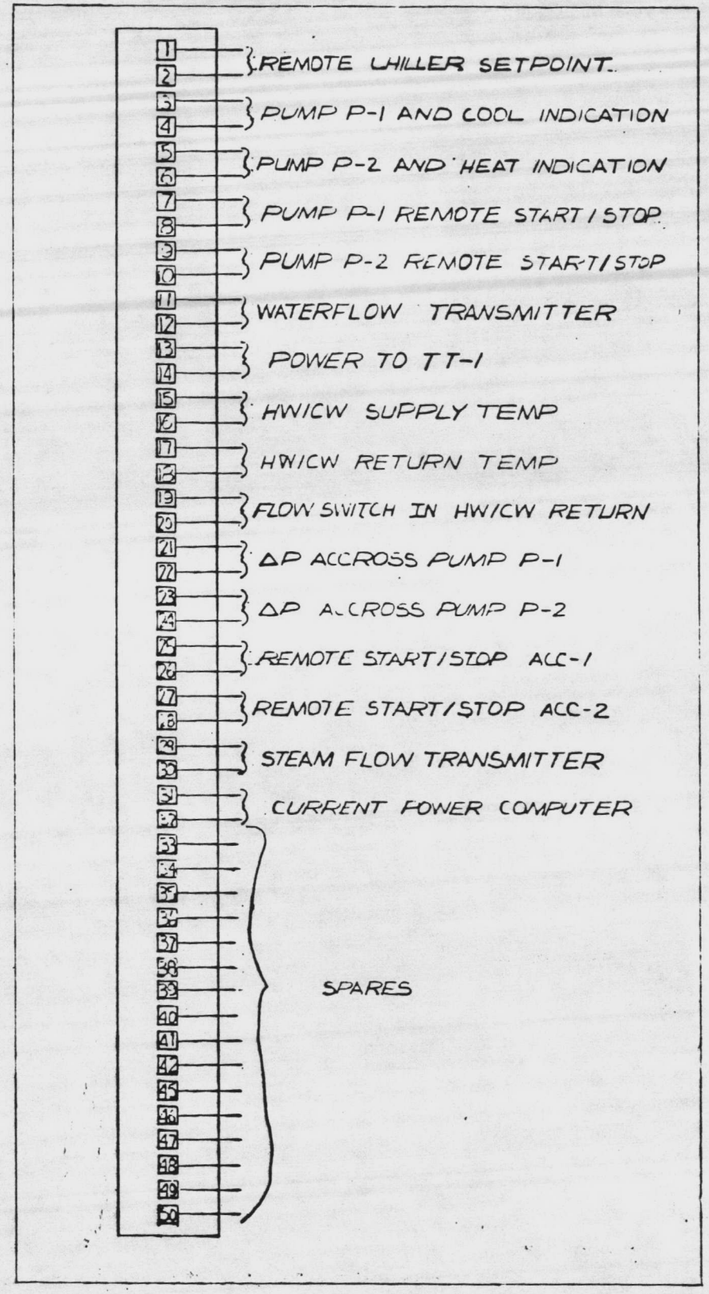

BUILDING 441 DTC CABINET CONNECTIONS

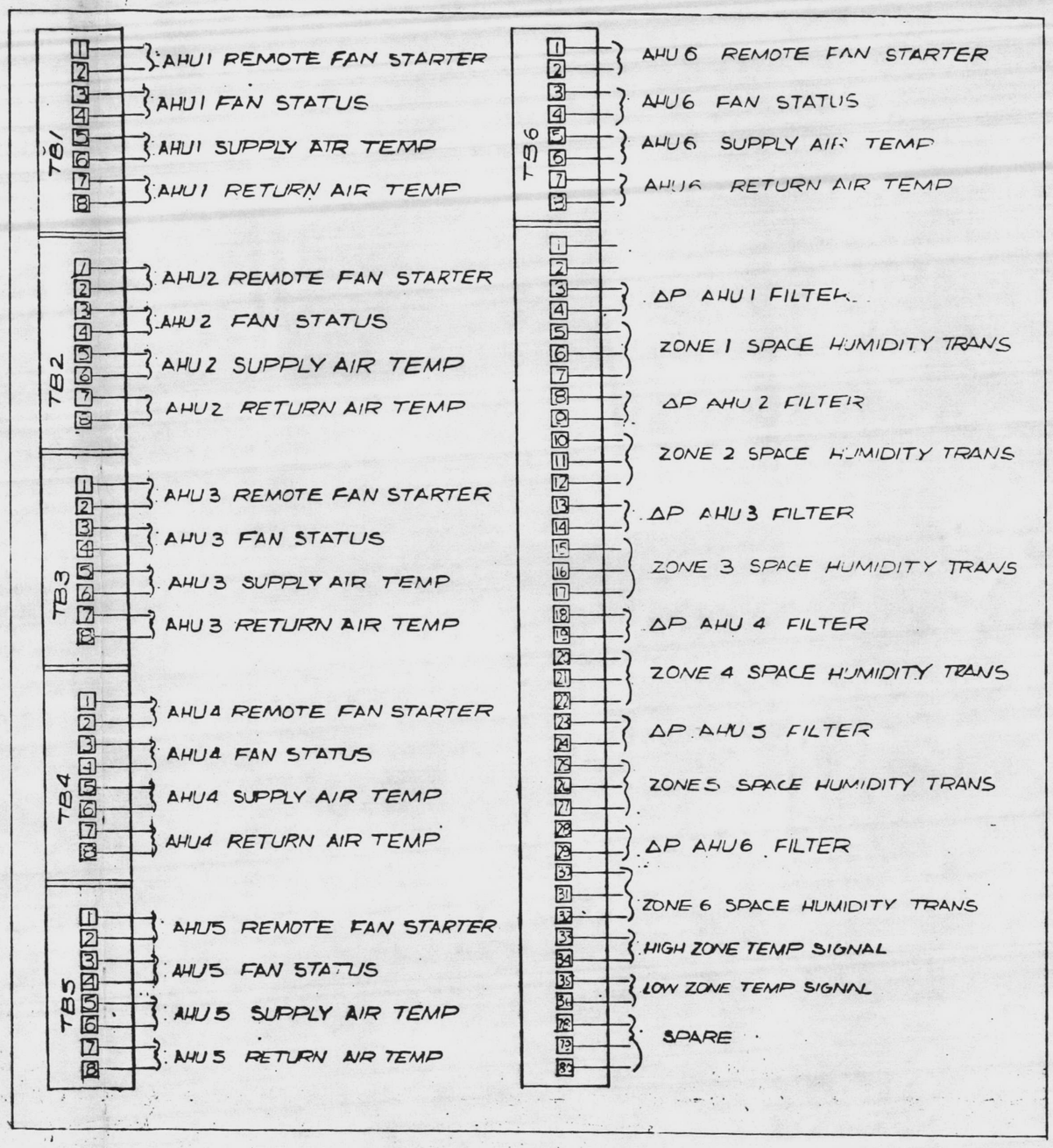

BARRACKS DTC CABINET CONNECTIONS

Additional Comments - Transmittal 28A

UEPH, Marine Corps Base
Camp Lejeune, North Carolina
N62470-82-C-2244

Transmittal 28 was disapproved. Transmittal 28A is acceptable with comments; however, the following items were included in Transmittal 28, but were not resubmitted in Transmittal 28A and must be submitted for review:

Ruskin Access Doors
Ruskin Louvers
Ruskin Balance Dampers (Manual)
Ruskin Fire Dampers
Horizontal F.D. Installation Instructions
F.D. Installation Requirements
Armstrong Circuit Balancing Valves Model CBVS -- CBV-½ to CBV-2 "II 2½"-10"
Watts Backflow Prevention Devices
Valve Sales Company, Incorporated - April 25, 1984 Letter of Compliance
Refer to No. 5 on Previous Sheet
Republic Steel Letter to Noland Company
Blue Ridge Pipe and Nipple Company - Certificate of Compliance
Stanley & Flagg and Company - Certificate of Compliance
Mueller Brass Products - Certificate of Compliance
ASA Standards Sheet

The following electrical changes are required for installation of the submitted equipment:

1. To accommodate heat pump, change receptacle to 20 amps, 6-20R, and delete requirement for matching plug (plug is furnished with heat pump.) Also change Circuit GH-1 to 20-amp trip with 2#12, 1#12G, ½"C. Refer to Sheets E-1 and 8.

2. To accommodate AHU's, change circuit breakers to 15 amps for LA-31, LB-24, LC-30, LD-24, LE-15, and LF-24. Refer to Sheet E-1.

3. To accommodate FCU's and air terminal blenders, change circuit breakers to 15 amps for LA-22 and 23, LB-22 and 23, LC-22 and 23, LD-22 and 23, LE-22 and 23, LF-22 and 23. Refer to Sheet E-1.

4. To accommodate EF-1, change circuit breaker to 15 amps for CP-35. Refer to Sheet E-1.

5. To accommodate EF-6, change circuit breaker to 15 amps for GH-6. Refer to Sheet E-8.

6. To accommodate Pump P-4 (duplex), change circuit breakers to 15 amps for A-9 and 10. Refer to Sheet E-7.

7. To accommodate UH-2, change circuit breaker to 20 amps for LS-5. Refer to Sheet E-8.

Galen Bolin
J. N. Pease Associates

MANUFACTURER'S DATA

"It is hereby certified that the (material) (equipment) shown and marked in this submittal, shop drawings, catalog cut(s), etc., and approved/proposed to be incorporated into Contract Number N62470-82-C-2244 is in compliance with the contract drawings and specifications, and can be installed in the allocated space, and is ✓ approved for use ___ submitted for Government approval.

Authorized Reviewer _____ Date 12/7/84

Signature CQC Reviewer _____ Date 12/7/84

THERMO-
industries
INCORPORATED

1424 SOUTH BLOODWORTH STREET
RALEIGH, NORTH CAROLINA 27611
PHONE 919/829-0155

4300 GOLF ACRES DRIVE
CHARLOTTE, NORTH CAROLINA 28208
PHONE 704/394-7311

June 20, 1984

Mr. Kerney Ramsey
Ramsey Heating & Air Cond.
P.O. Box 1333
Jacksonville, N. C. 28540

Dear Kerney:

Carrier cannot supply the information concerning SEER and HSPF of the 52BQA514 thru-the-wall heat pump unit. The enclosed submittal data is all that can be supplied.

If you have any questions, please do not hesitate to call.

Sincerely,

THERMO-INDUSTRIES, INC.

Mark Powell

Mark Powell
Plan & Spec Dept.

MP:jlc

Enclosure

SUBMITTAL DATA

6-20-84

UEPH - CAMP JOHNSON

CAMP LEJEUNE, N. C.

MECHANICAL CONTRACTOR----------RAMSEY HEATING & AIR COND.
HWY 17 NORTH, COMMERCE DRIVE
JACKSONVILLE, N. C. 28540

****

INDEX

1. SUMMARY SHEET OF ALL EQUIPMENT FURNISHED.

2. CERTIFIED DRAWING & PRODUCT DATA DIGEST ON CARRIER MODEL 52BQA514 THRU-THE-WALL HEAT PUMP UNIT.

PA. 2.2.1
a Heat Pump

PA 3.11.1 thru
3.11.5
Heat Pump

SUBMITTAL DATA

SUMMARY SHEET OF ALL EQUIPMENT FURNISHED

1 - Carrier Model 52BQA514-301AA thru-the-wall heat pump unit including:
- 1 - 52AR900-011 wall sleeve
- 1 - 52BQ905-001 architectural louvered grille

PA 2.2.1
a. Heat Pump

PA 3.11.4 thru
3 11.5

52BQ, BR

Cooling: 7,000 - 14,000 Btuh
Heating: Heat Pump — 6,000 - 12,600 Btuh
Electric — 7,600 - 17,000 Btuh

Carrier Wall Pac Packaged Terminal Air Conditioners

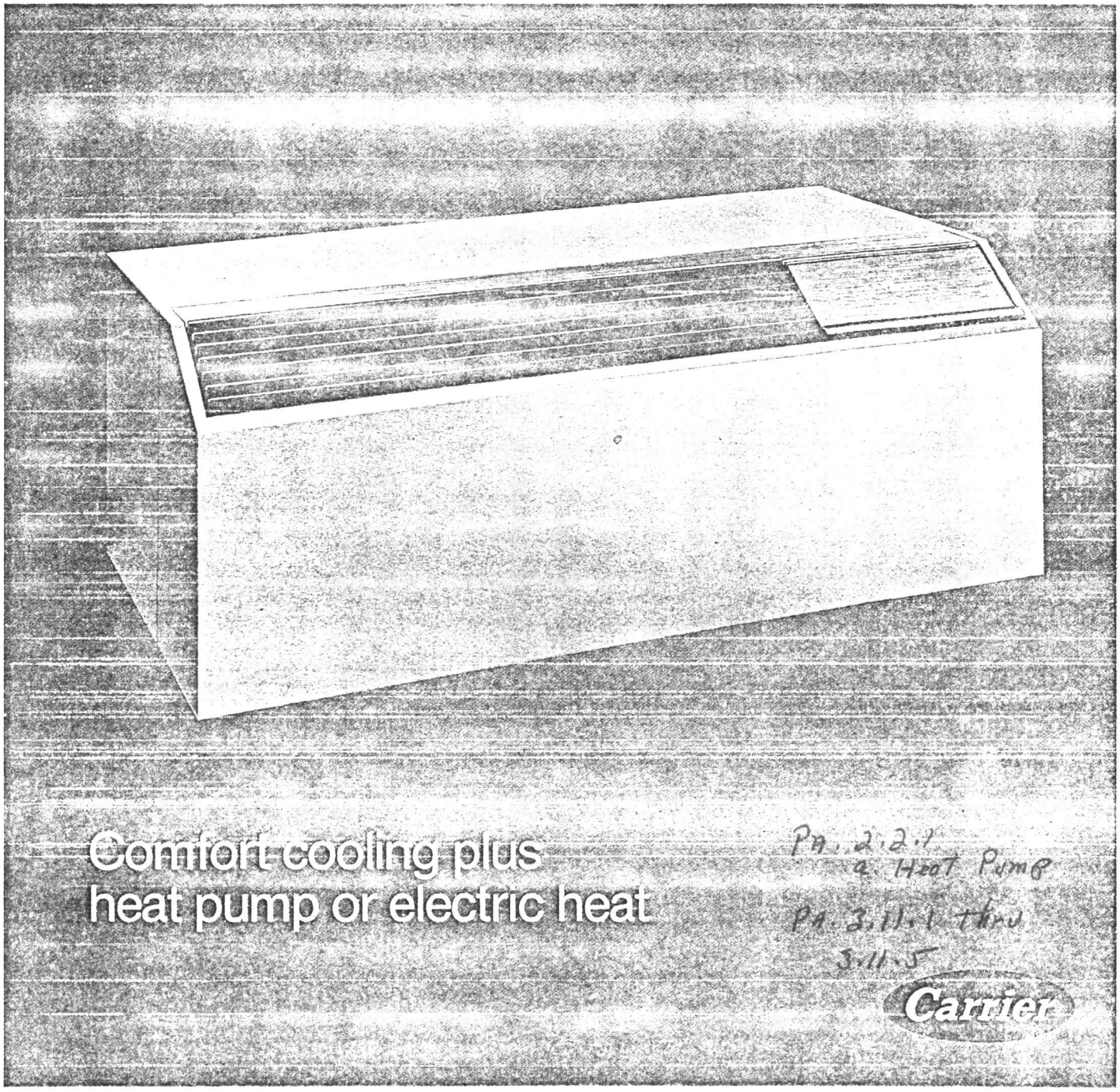

Comfort cooling plus heat pump or electric heat

Pa. 2.2.1 a. Heat Pump

Pa. 3.11.1 thru 3.11.5

Carrier

© Carrier Corporation 1984

Carrier Wall Pac — designed for cooling and heating reliability and economy in today's multi-room structures.

Wall Pac offers

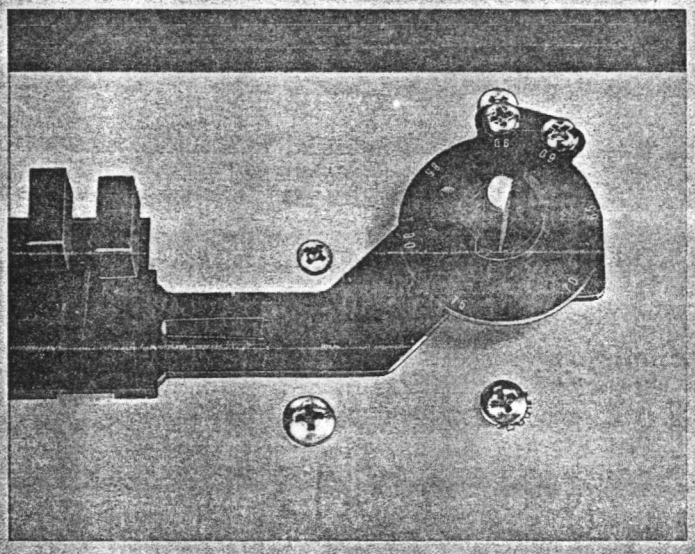

Econo Zone II Temperature Limiter

Econo Zone II permits adjustment of the temperature range available to the user by restricting rotation of the TEMPERATURE control knob. Temperature range is factory-set for full rotation. This feature reduces operating costs. Not applicable to remote control (RC) units.

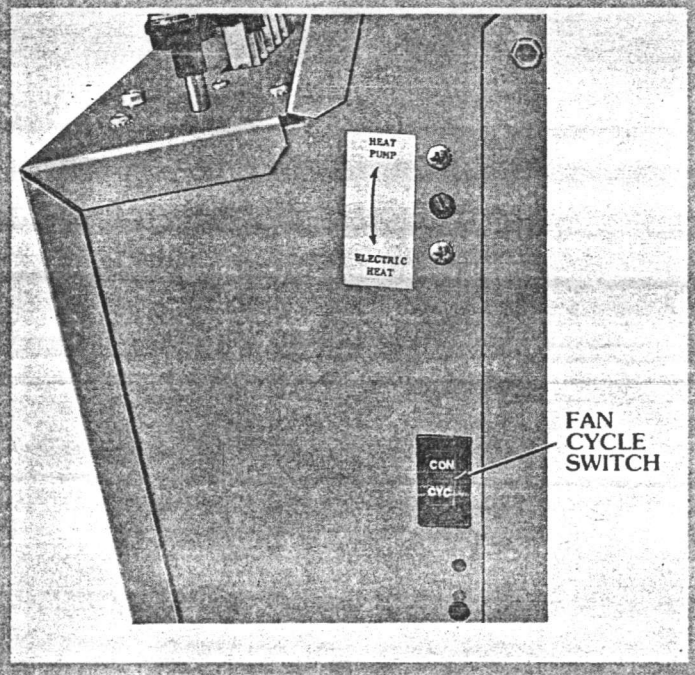

Fan cycling

Continuous fan operation is achieved in both cooling and heating modes by pushing switch to CON position. For automatic fan cycling when unit is in cool or heat mode, push switch to CYC position. Fan runs continuously in FAN ONLY mode. On remote control (RC) units, fan cycling is controlled from remote thermostat. This feature saves energy.

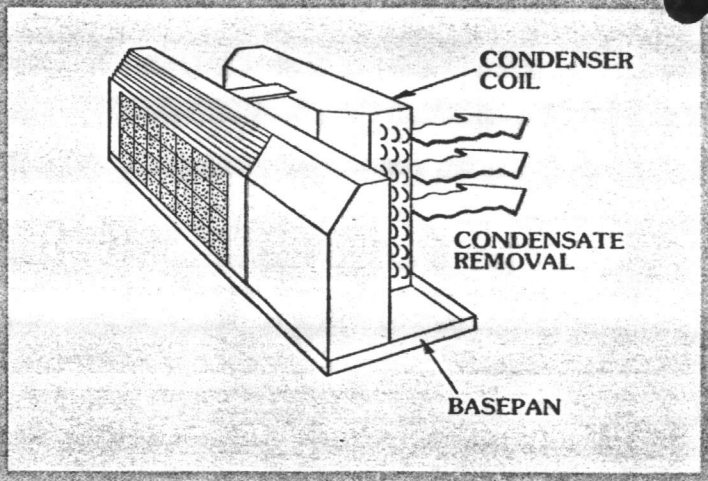

Stay Dry™ condensate removal system

Built into the outdoor fan shroud is the aspirator. . .the heart of Carrier's patented condensate removal system. The system vacuums condensate water out of the basepan thru the aspirator, and disperses it in a fine mist onto the outdoor coil where it evaporates. Even in the most humid operating conditions, the system effectively disposes of condensate water, thereby preventing condensate water staining of exterior walls.

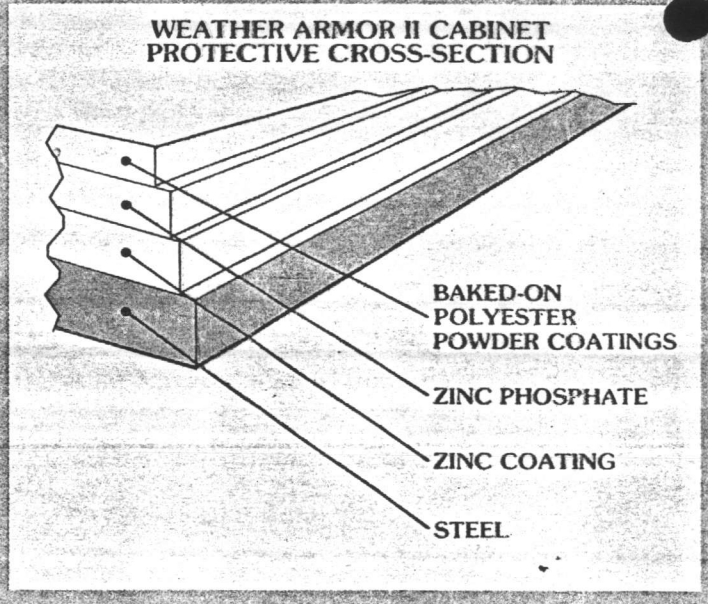

Weather Armor II cabinet

A superior shield that wards off the corrosive effects of rain, sun, soot and dust. The key protection is a heavy zinc coating to preserve the steel underneath.

Over this layer of zinc, 2 additional coatings protect and beautify. A layer of zinc phosphate prepares the metal surface for strong paint adhesion. Polyester pow coatings are baked to obtain the best curing and surfa properties. These paints form a hard, polymer-fortified coat that keeps its appearance for years.

All Carrier cabinets are approved by Underwriter's Laboratories and exceed the stringent UL requirements.

Adjustable airflow

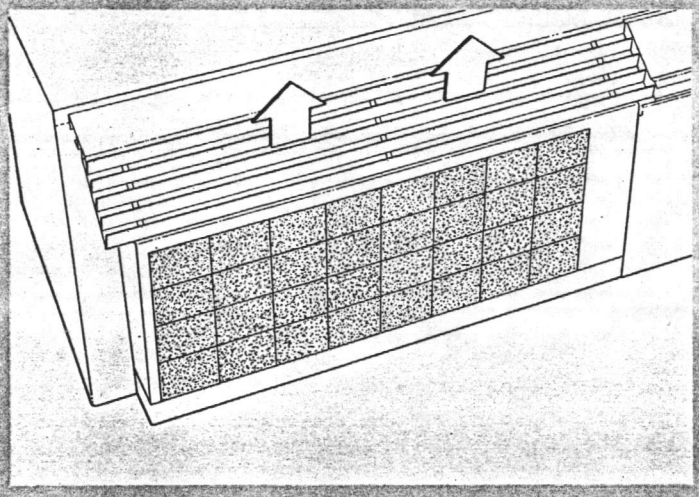

The attractive air discharge grille, of heavy-gage extruded aluminum, projects air in a vertical pattern but can also. . .

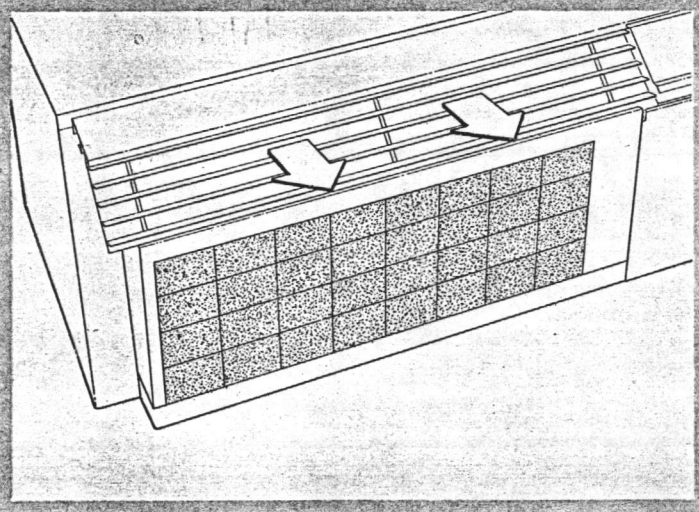

be reversed for horizontal airflow in high-wall installations. Simply remove 2 screws.

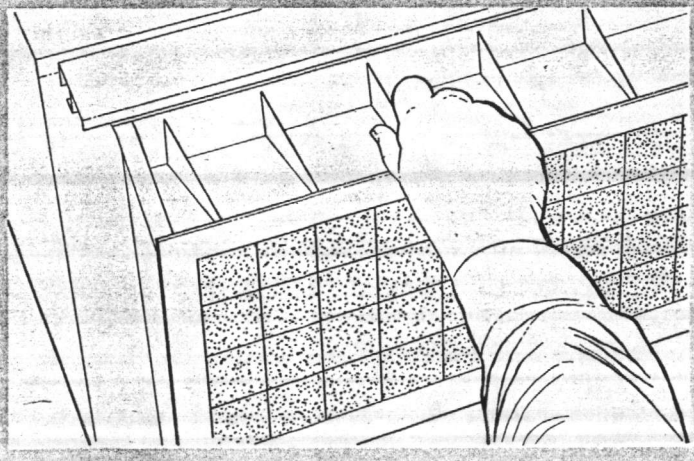

Side-to-side air deflectors are adjustable and can be set during or after installation.

Ease of maintenance

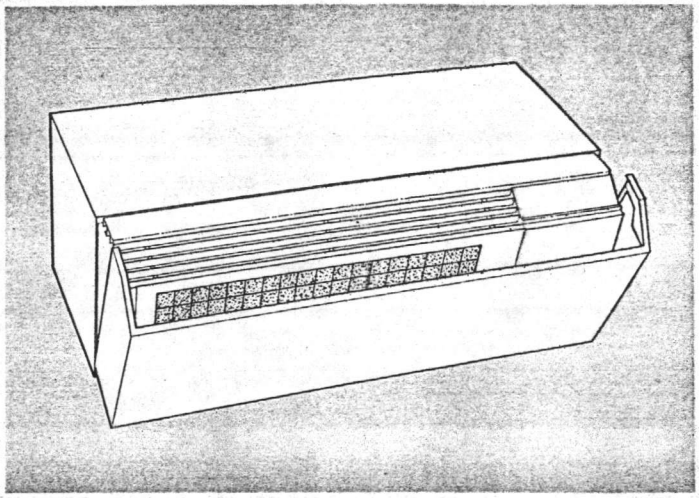

Easy on-off indoor panel

Textured indoor panel of high impact polymer fits tightly, removes easily without using tools. Provides quick access to filter and for convenient maintenance.

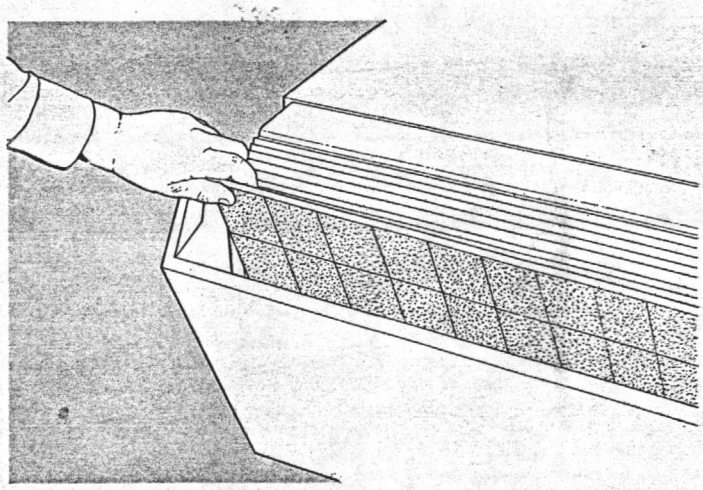

Filter

The filter is easily accessible — simply remove the indoor panel and slide out the filter assembly.

The filter and filter frame comprise a single assembly with a permanent frame and reusable polyurethane filter.

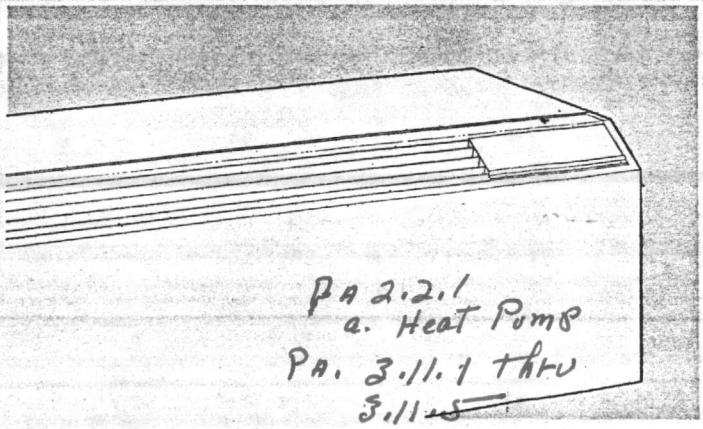

PA 2.2.1
a. Heat Pumps
PA. 3.11.1 thru
3.11.5

Slope front control door

Discourages use as shelf. Won't break under constant usage by transient occupants.

Page 4

Optional control systems

Energy Management (EM) option — Special chassis permits individual Wall Pac units to be shut off from a central location to save energy when rooms are unoccupied. Freeze Guard protection automatically maintains room temperature above 40 F to prevent costly freezing damage.

Remote Control (RC) option — Unit is operated from a remote thermostat (field supplied). Manual changeo from heat-to-cool at thermostat, plus fan cycling from thermostat.

Accessories

Sleeve dimensions and weight

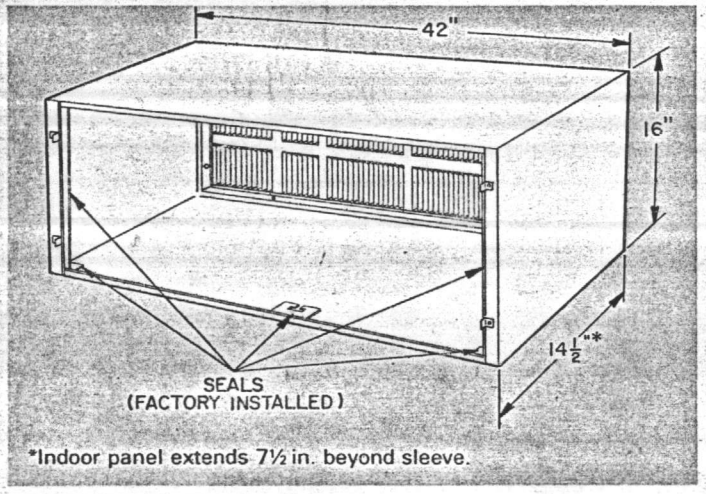

*Indoor panel extends 7½ in. beyond sleeve.

SLEEVE NO.	SHIP. WT (lb)	STANDARD GRILLE NO. (Shown on Sleeve)
52AR900011 (Less Grille)	6	52BQ908001

NOTE: Only a Carrier sleeve should be used. Use of a non-Carrier sleeve must be approved by Carrier in Syracuse, New York.

Subbase for curtain wall installation. Shipped in single pack.

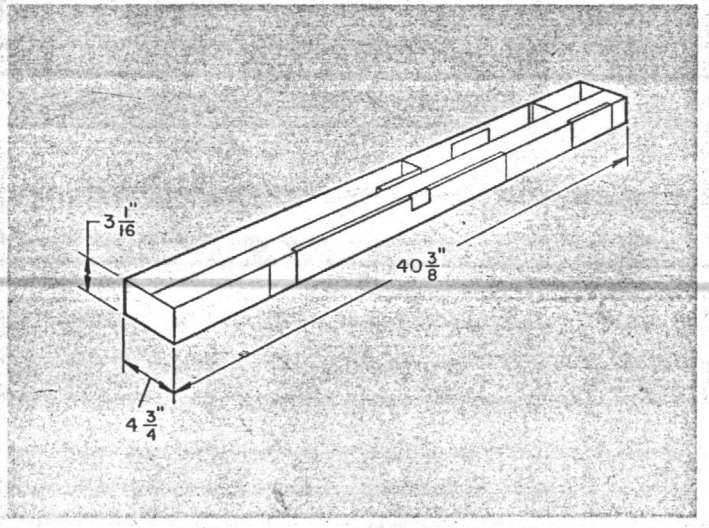

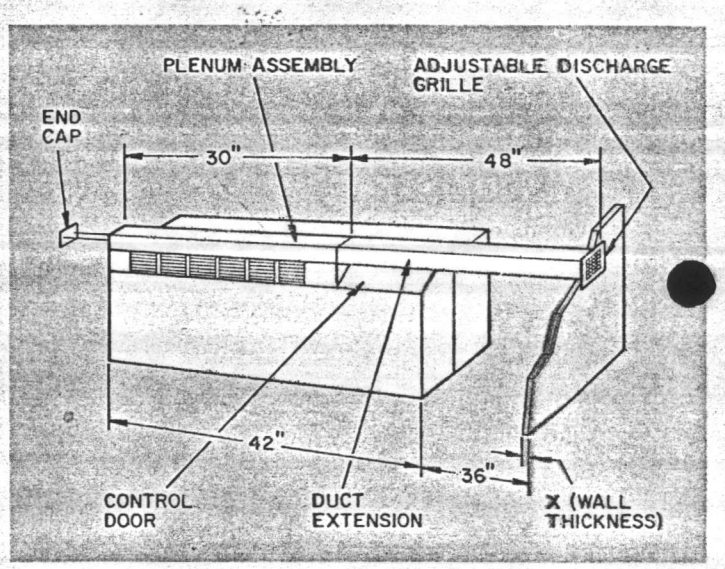

Lateral duct kit — Allows up to 40% of the unit capacity to be discharged into an adjoining room to either the right or left of the unit. Kit includes discharge plenum, 48-in. long duct, baffle, end cap, adjustable discharge grille, and internal damper to regulate airflow. To use this duct, unit must be permanently wired. Minimum sleeve projection into room is one inch.

NOTE: In order to meet UL requirements, cord connected units require accessory junction box kit (No. 52BQ909001) when used with lateral duct kit.

Lateral duct adapter plenum. Shipped in single pack.

Lateral duct extension piece. Shipped in single pack.

Architectural louvered grille — extruded aluminum. Shipped in 6-pack. Choice of aluminum or bronze baked enamel finish.

Universal drain kit. Shipped in 4-pack. For external internal drain.

Control knob with locking setscrew. Field installed. Shipped in 12-pack.

Junction box for 230/208 v units when used with lateral duct kit or when permanent connection is desired.

Physical and Performance Data — 52BQ

MODEL 52BQ*	CAPACITY† (Btuh)			EER	C.O.P.	VOLTS (1-Ph, 60-Hz)	VOLT RANGE	AMPS	
	Cooling	Heating						Cooling	Heating‡
		Rev. Cycle	Electric						
A2073	7,000/ 7,000	6,200/ 6,000	7,800/ 7,600	9.4/9.8	2.9/3.0	230/208	253-197	3.4/3.5	10.9/10.1
A3073	7,000/ 7,000	6,200/ 6,000	11,600/10,900	9.4/9.8	2.9/3.0			3.4/3.5	15.7/15.5
A2093	9,000/ 9,000	8,200/ 8,000	7,800/ 7,600	8.5/8.8	2.7/2.7			4.8/5.1	10.9/10.1
A3093	9,000/ 9,000	8,200/ 8,000	11,600/10,900	8.5/8.8	2.7/2.7			4.8/5.1	15.7/15.5
A3123	11,800/11,600	10,700/10,400	11,600/10,900	8.2/8.2	2.5/2.5			6.5/7.1	15.9/15.7
A5123	11,800/11,600	10,700/10,400	17,000/13,900	8.2/8.2	2.5/2.5			6.5/7.1	23.0/20.8
A3143	14,000/13,700	12,600/12,200	11,600/10,900	7.0/7.0	2.2/2.1			9.0/9.8	15.9/15.7
A5143	14,000/13,700	12,600/12,200	17,000/13,900	7.0/7.0	2.2/2.1			9.0/9.8	23.0/20.8

Standard models — inventory in Syracuse. Other models special order — require 120 - 180 days for delivery.

C.O.P. — Coefficient of Performance at 47F outdoor ambient temperature
EER — Energy Efficiency Ratio
Hp — Horsepower
PF — Power Factor

*Models available in AA version (chassis shipped with indoor panel). Order wall sleeve separately. See page 4.
†Rated in accordance with ARI Standard 380-82.
‡Electric resistance heat.

NOTE: CSA approval applies to standard units only.

RECEPTAC

RATED VOLTS	
AMPS	15
	A
MFG PART NO.	
Hubbell	5661
P & S	5661
GE	GE406
Arrow-Hart	5661
TIME-DELAY FUSE (or HACR Circuit Breaker)	15

HACR — Heating, Air Conditioning, Refrige
*May be used for 15-amp applications if fuse

Heat pump heating performance*

OUTDOOR TEMP (F)	MODEL 52BQA											
	073†			093†			123†			143†		
	Btuh	Amps	Watts	Btuh	Amps	Watts	Btuh	Amps	Watts	Btuh	Amps	Watts
65	7790	3.1	655	10,200	4.4	940	13,000	6.2	1320	15,300	8.2	1800
60	7320	3.1	655	9,570	4.4	930	12,300	6.1	1310	14,600	8.1	1780
55	6960	3.0	645	9,020	4.2	910	11,800	6.0	1280	14,000	8.0	1750
50	6420	3.0	640	8,430	4.2	910	11,000	6.0	1280	12,900	7.7	1710
47 (Rating Point)	6200	2.9	630	8,200	4.1	890	10,700	5.8	1255	12,600	7.6	1680
45	5970	2.9	625	7,880	4.1	885	10,200	5.7	1240	12,000	7.5	1660
40	5150	2.8	615	6,930	4.0	870	8,990	5.5	1210	10,600	7.2	1600
35	4470	2.6	595	5,970	3.8	850	7,880	5.3	1170	9,340	6.9	1550
30	3850	2.5	575	5,250	3.6	815	7,160	5.0	1120	8,750	6.6	1490
25	3240	2.4	560	4,310	3.4	785	5,940	4.7	1070	7,740	6.3	1430

Below 25F, unit operates on electric resistance heat.

*Heat pump performance is based on 70F indoor temperature.
†Data shown for 230-volt operation only.

PA 2.2.1 a. Heat Pump
PA 3.11.1 Thru 3.11.5

EFF %	WATTS		FAN MOTORS			MAX FUSE SIZE AMPS	MIN CIRCUIT AMPS	RECEP-TACLE TYPE	DEHUMIDIFI-CATION (Pints/Hr)	APPROX. SHIP. WT (lb)
	Cooling	Heating‡	Hp	Indoor Fan Cfm Hi/Lo	Indoor Fan Cfm Vent					
95	745/ 715	2500/2100	1/10	280/210	70	15	13.4	A	1.5	134
95	745/ 715	3600/3200				20	19.4	B		
96	1060/1020	2500/2100				15	13.4	A	2.6	136
96	1060/1020	3600/3200				20	19.4	B		
96	1440/1415	3600/3200	1/6	315/210		20	19.6	B	3.8	140
96	1440/1415	5200/4250				30	28.5	C		
96	2000/1960	3600/3200				20	19.6	B	5.7	164
96	2000/1960	5200/4250				30	28.5	C		

TYPE

250	
20	30
B	C
5461 5871 GE4182-1 5861	9330 5930 GE4139-3 5700
20*	30

n
15 amp.

UNIT DIMENSIONS

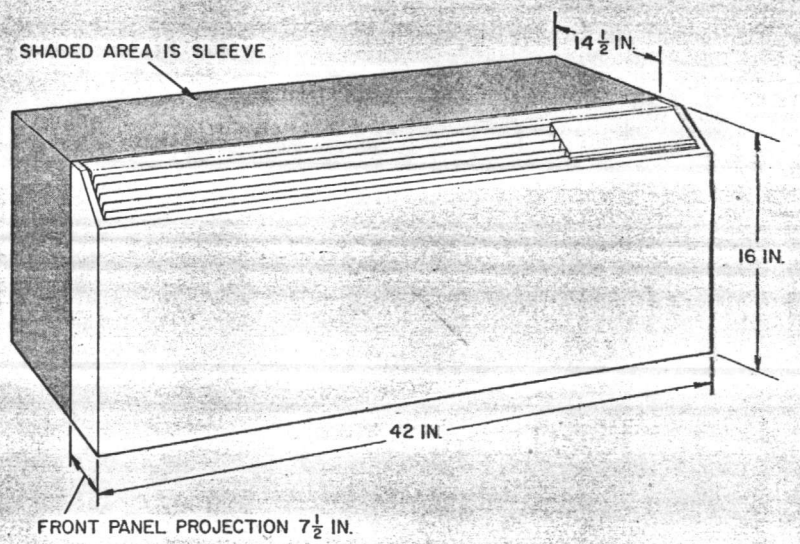

Physical and Performance Data — 52BR

MODEL 52BR*	CAPACITY† (Btuh)		EER	VOLTS (1-Ph 60-Hz)	VOLT RANGE	AMPS		PF (%)
	Cooling	Heating				Cooling	Heating	
A2073	7,400/ 7,200	7,800/ 7,600	10.0/10.0	230/208	253-197	3.3/3.5	10.9/10.1	97
A3073	7,400/ 7,200	11,600/10,900	10.0/10.0			3.3/3.5	15.7/15.5	97
A2093	9,000/ 9,000	7,800/ 7,600	9.0/ 9.1			4.4/4.8	10.9/10.1	98
A3093	9,000/ 9,000	11,600/10,900	9.0/ 9.1			4.4/4.8	15.7/15.5	98
A3123	11,800/11,600	11,600/10,900	8.3/ 8.3			6.3/6.9	15.9/15.7	98
A5123	11,800/11,600	17,000/13,900	8.3/ 8.3			6.3/6.9	23.0/20.8	98
A3143	14,000/13,700	11,600/10,900	7.3/ 7.1			8.7/9.7	15.9/15.7	96
A5143	14,000/13,700	17,000/13,900	7.3/ 7.1			8.7/9.7	23.0/20.8	96

Standard Models — inventory in Syracuse. Other models special order — require 120 - 180 days for delivery.

EER — Energy Efficiency Ratio
Hp — Horsepower
PF — Power Factor

*Models available in AA version (chassis shipped with indoor panel). Order wall sleeve accessory separately. See page 4.
†Rated in accordance with ARI Standard 310-82.

NOTE: CSA approval applies to standard units only.

Application data

TYPICAL WALL INSTALLATION

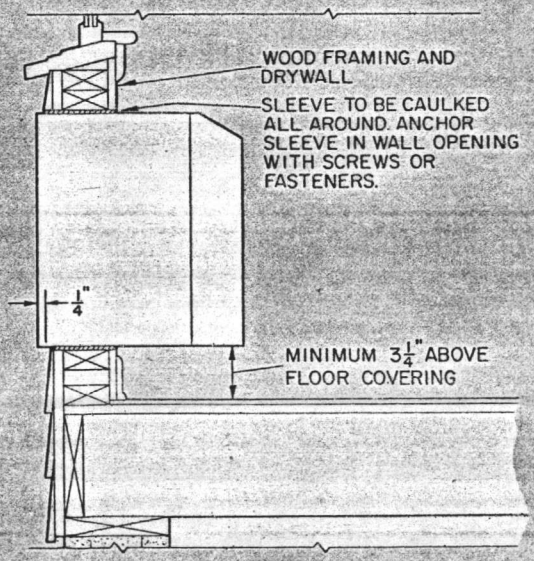

TYPICAL DEE

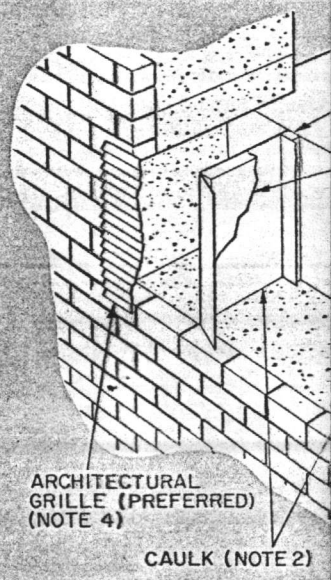

PA 2.2.1
a. Heat Pump
PA 2.11.1 thru 3.11-5

NOTES:
1. Baffles may be part of a "box" typ coil tube sheets.
2. Caulk all joints between sleeve
3. If a subbase is to be used, a min
4. If outdoor wall opening has an e on sleeve.

WATTS		FAN MOTORS			MAX FUSE SIZE AMPS	MIN CIRCUIT AMPS	RECEP-TACLE TYPE	DEHUMIDIFI-CATION (Pints/Hr)	APPROX. SHIP. WT (lb)
Cooling	Heating	Hp	Indoor Fan Cfm						
			Hi/Lo	Vent					
740/ 720	2500/2100	1/10	280/210	70	15	13.4	A	1.5	131
740/ 720	3600/3200				20	19.4	B		
1000/ 990	2500/2100				15	13.4	A	2.9	133
1000/ 990	3600/3200				20	19.4	B		
1420/1400	3600/3200	1/8	315/210		20	19.6	B	3.8	137
1420/1400	5200/4250				30	28.5	C		
1920/1930	3600/3200				20	19.6	B	5.4	161
1920/1930	5200/4250				30	28.5	C		

RECEPTACLE TYPE

RATED VOLTS	250		
AMPS	15	20	30
	A	B	C

WALL INSTALLATION

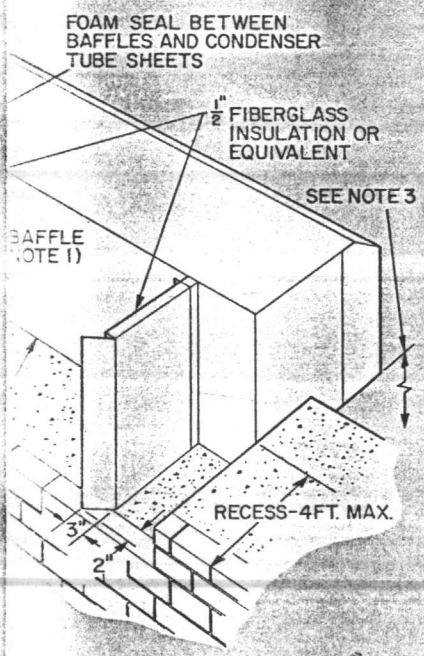

xtension of sleeve or fixed directly to condenser

affles and opening in wall.
um dimension of 3¼ in. must be allowed.
ng grille, do not install a second outdoor grille

TYPICAL CURTAIN WALL INSTALLATION

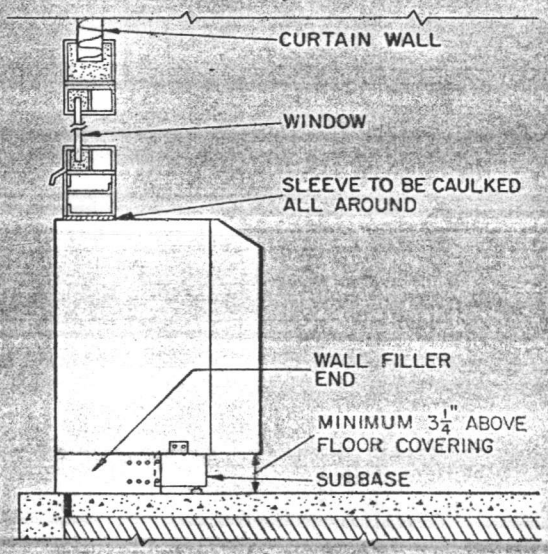

Guide specifications

Furnish and install_____ air-cooled packaged terminal air conditioners as indicated on the plans.

Grand total cooling capacity shall be_____ Btuh or greater with a total indoor air quantity of_____ cfm, entering wet-bulb temperature of 67 F and 95 F outdoor air temperature. Total dehumidification capacity shall be_____ pints per hour.

Grand total heat shall be_____ Btuh or greater of electric resistance heat,_____ Btuh or greater in heat pump (reverse cycle) mode.

Each unit shall have the following capacities: _____ Btuh cooling,_____ Btuh heating (resistance),_____ Btuh heating (heat pump),_____ cfm and_____ pints per hour dehumidification.

Controls shall be factory wired and completely enclosed within the unit and be accessible from the top. Adjustable thermostat shall automatically cycle compressor to maintain space conditions. Manual override switch shall operate electric resistance heat in case of compressor malfunction in heat pump models. Thermostat shall be of the liquid-filled or vapor-filled cross-ambient type. Unit will start and operate in cooling mode to 25 F outdoor temperature. Unit control shall be 6-position switch with high and low fan speeds for cooling and heating and one position for fan-only operation. Ventilation control shall be a 2-position control to introduce fresh air to the room or to close the vent. All vent air shall be filtered.

Compressor shall be rubber shock mounted or spring mounted for quiet operation and vibration isolation. Compressor shall be in a hermetically sealed steel case that is sprayed with black paint.

Vent Auto.-Close shall permit manual adjustment of vent door operation, to prevent door from remaining open in off position. Auto.-Close feature can be used in heat or cool modes (except for RC models).

Fan cycle switch shall provide fan cycling operation in cooling and heating modes to reduce energy costs. On RC units, fan cycling is controlled from remote thermostat.

Econo Zone II temperature limiter shall provide energy savings. Temperature control knob can be manually reset to adjust operating temperature range.

Stay Dry™ condensate removal system shall consist of aspirator built into shroud to remove accumulated moisture from basepan. Moisture and condensate are removed and thrown onto coil in a fine mist where they evaporate. Drain system is not required in normal heat pump operation. Drains offered to meet code requirements.

Evaporator and condenser coils shall have aluminum tubing and aluminum fins. A capillary tube shall be the metering device for the refrigeration system.

Indoor and outdoor fans shall be direct driven with a motor of 1/10 or 1/6 horsepower. Indoor fan shall be centrifugal type and outdoor fan shall be propeller type with aspirator for condensate removal.

Indoor panel shall be nonflammable, high impact polymer and provide for top air discharge.

Wall sleeve shall be one-piece sleeve for wall installations. It shall be fabricated from 20-gage (top) and 18-gage (bottom) galvanized steel. Finish on sleeve shall be baked-on polyester powder coating. Sleeve shall be shipped with closure panel at both the indoor and outdoor section of sleeve and with installation instructions on inside panel. Outside grille shall be shipped separately and easily mounted within inside flanges on outdoor section of sleeve. Finish on outside grille shall be anodized aluminum. Sleeve shall be no more than 42 in. wide, 16 in. high and 14-1/2 in. deep.

Unit chassis shall be slide-out design and shall be shipped separate from the sleeve, with indoor panel.

Subbase is available for unit support in curtain wall installations. Receptacle, if needed for subbase, shall be field supplied.

Basepan shall consist of a steel base protected by a heavy zinc coating, a layer of zinc phosphate for superior paint adherence, and baked-on polyester powder coatings for the best curing and surface properties.

Adjustable air discharge grille shall be of heavy-gage extruded aluminum with nylon coating and will project air in a vertical pattern, be reversible for high-wall horizontal airflow, and have side-to-side air deflectors.

Warranty shall consist of 5-year protection: all parts and labor for the first year, and protection for all parts and labor on compressor, interconnecting tubing and coils for the second thru fifth years. At no additional charge to the purchaser.

Pg 2.2.1
④ Heat Pump
Pg 3.11.1 Thru
5.11.5

McQUAY GROUP
McQuay Perfex Inc.
P.O. Box 1551, Minneapolis, MN 55440

SEASONMASTER
LOW AND MEDIUM PRESSURE
CENTRAL STATION AIR CONDITIONING UNITS
UNIT SIZES 103 THROUGH 111 (VERTICAL)

CERTIFIED DRAWING
265539Y

TYPES LSL & MSL

McQuay certifies that it will furnish equipment in accordance with this drawing and specifications, and subject to its published warranty. Purchaser's approval of this drawing signifies that the equipment is acceptable under the provisions of the job specifications. Any change made hereon by any person whomsoever is subject to acceptance by McQuay at its home office.

GENERAL SPECIFICATIONS

CABINET – Galvanized steel structural frame and panels. Access doors and removable panels provide complete accessibility to interior.
FANS – Galvanized steel dynamically balanced. Blades riveted to rims and center plate. Cast iron hubs.
HOUSINGS – Galvanized steel, die-formed with spot welded seams.
SHAFTS – Solid high carbon steel sized so that the operating speed is well below the first critical speed.
SHEAVES – Machined cast iron, "V" groove type, key seated to shaft.
MOTOR MOUNT – Adjustable for varying belt tension.
BEARINGS – Self-aligning, ball type with grease fittings and extended lube lines.
BELT GUARDS – Galvanized steel with fan shaft tachometer opening.
INSULATION – Neoprene coated 1" glass fiber. Meets NFPA 90A standards.
DRAIN PAN – Galvanized steel, inner pan covered with protective mastic coating and thermally isolated from bottom pan with 1" glass fiber insulation.

CERTIFIED PERFORMANCE DATA
CENTRAL STATION AIR HANDLING UNITS

SOLD TO: Ramsey Air Conditioning, Inc.
Jacksonville, NC

McQUAY ORDER NO.: G.O.
DATE DR.: 3-14-84
CUST. P.O.: 0519

JOB: Unaccompanied Enlisted Personnel Housing
Marine Corps Base, Camp Lejeune, NC

REP.: Hoffman & Hoffman, Inc.
REP. P.O.: 22-1115

12 COPIES | X FOR APPR'L | FOR RECORD

CONSULTING ENGINEER:
J. N. Pease, Assoc.
Charlotte, NC

REV. NO.	BY	DATE	WAS

McQUAY ITEM NO.	TAG	QTY.	UNIT MODEL NO.	UNIT ARRGMT.	FAN DISCHARGE NO.	FAN TYPE	CFM	OUTLET VELOCITY
010	AHU#1,4,5,6	12	LSL-106	V101	1	FC	2700	1421

McQUAY ITEM NO.	RPM	BHP	MOTOR DATA				
			MHP	RPM	VOLTAGE	NEMA FRAME	FURNISHED BY
010	985	1.15	1.5	1800	208-60-3	145T	McQuay

McQUAY ITEM NO.	COIL MODEL NO.	COIL* POS.	COIL FACE AREA	COIL FACE VEL.	TOTAL BTUH	SENSIBLE BTUH	ENT. AIR		LVG. AIR	
							D.B.	W.B.	D.B.	W.B.
010	4WH1204H	21	5.5	494	86,769	66,155	78.7	65.9	56.3	55.5
					-	98,000	65.4	-	99.0	-

McQUAY ITEM NO.	GPM STEAM PRESS. OR REF.	ENT. H_2O OR SUCT. TEMP.	LVG. H_2O TEMP.	WATER PRESS. DROP	CONN. LOCATION		SUPPLY CONN.		RETURN CONN.	
					DRIVE END	OPP. DRIVE END	NO.	SIZE	NO.	SIZE
010	14.0	42.0	54.4	5.3'		X	1	1½	1	1½
	9.4	180.0	159.0	2.5'						

McQUAY ITEM NO.	ACCESSORY ARRGMT.		OVERALL LENGTH	MULTIZONE DAMPER SHAFT EXT. LOCATION	AIR FRICTION							
	ARRG. NO.	FILTER TYPE			HTG. COIL	CLG. COIL	COIL	MIXING BOX	FILTER	CASING	EXTERNAL	TOTAL
010	A1	1		-	-	.53	-	-	.13	.51	.38	1.55

NOTES:
1. Units constructed and tested per ARI 430.
2. Dual temperature coil.
3. Adjustable motor sheave.
4. Freestanding spring vibration isolators.

APPROVAL REQUIRED
MATERIAL WILL NOT BE ORDERED UNTIL RECEIPT OF APPROVED DRAWINGS.
HOFFMAN & HOFFMAN, INC.

*Coil Position Code: 18 = in auxiliary coil section; 21 = 1st coil in std. coil sect. or coil in cold deck of blow-thru unit; 24 = 2nd coil in std. coil sect. or coil in hot deck of blow-thru unit; 27 = 3rd coil in std. coil sect.; PH = preheat (before 1st std. sect. of unit); RH = reheat (before fan section).

Par. 2.2.1
b. A.H.U. Par. 3.2

McQUAY GROUP
McQuay-Perfex Inc.
P.O. Box 1551, Minneapolis, MN 55440

SEASONMASTER
LOW AND MEDIUM PRESSURE CENTRAL STATION AIR CONDITIONING UNITS
UNIT SIZES 103 THROUGH 111 (VERTICAL)

CERTIFIED DRAWING
265539Y

TYPES LSL & MSL

McQuay certifies that it will furnish equipment in accordance with this drawing and specifications, and subject to its published warranty. Purchaser's approval of this drawing signifies that the equipment is acceptable under the provisions of the job specifications. Any change made hereon by any person whomsoever is subject to acceptance by McQuay at its home office.

GENERAL SPECIFICATIONS

CABINET – Galvanized steel structural frame and panels. Access doors and removable panels provide complete accessibility to interior.
FANS – Galvanized steel dynamically balanced. Blades riveted to rims and center plate. Cast iron hubs.
HOUSINGS – Galvanized steel, die-formed with spot welded seams.
SHAFTS – Solid high carbon steel sized so that the operating speed is well below the first critical speed.
SHEAVES – Machined cast iron, "V" groove type, key seated to shaft.
MOTOR MOUNT – Adjustable for varying belt tension.
BEARINGS – Self-aligning, ball type with grease fittings and extended lube lines.
BELT GUARDS – Galvanized steel with fan shaft tachometer opening.
INSULATION – Neoprene coated 1" glass fiber. Meets NFPA 90A standards.
DRAIN PAN – Galvanized steel, inner pan covered with protective mastic coating and thermally isolated from bottom pan with 1" glass fiber insulation.

CERTIFIED PERFORMANCE DATA
CENTRAL STATION AIR HANDLING UNITS

SOLD TO: Ramsey Air Conditioning, Inc.
Jacksonville, NC

McQUAY ORDER NO.: G.O.
DATE DR.: 3-14-84
CUST. P.O.: 0519

JOB: Unaccompanied Enlisted Personnel Housing
Marine Corps Base
Camp Lejeune, NC

REP.: Hoffman & Hoffman
REP. P.O.: 22-1115
12 COPIES | X FOR APPR'L | FOR RECORD

CONSULTING ENGINEER:
J. N. Pease, Assoc.
Charlotte, NC

REV. NO.	BY	DATE	WAS

McQUAY ITEM NO.	TAG	QTY.	UNIT MODEL NO.	UNIT ARRGMT.	FAN DISCHARGE NO.	FAN TYPE	CFM	OUTLET VELOCITY
020	AHU# 2 & 3	6	LSL-106	V-101	1	FC	2500	1311

McQUAY ITEM NO.	RPM	BHP	MOTOR DATA				
			MHP	RPM	VOLTAGE	NEMA FRAME	FURNISHED BY
020	950	0.96	1.0	1800	208-60-3	143T	McQuay

McQUAY ITEM NO.	COIL MODEL NO.	COIL* POS.	COIL FACE AREA	COIL FACE VEL.	TOTAL BTUH	SENSIBLE BTUH	ENT. AIR		LVG. AIR	
							D.B.	W.B.	D.B.	W.B.
020	4WH1204H	21	5.5	457	82,971	62,797	78.8	65.9	55.8	55.1
						91,530	65.1	–	95.0	–

McQUAY ITEM NO.	GPM STEAM PRESS. OR REF.	ENT. H_2O OR SUCT. TEMP.	LVG. H_2O TEMP.	WATER PRESS. DROP	CONN. LOCATION		SUPPLY CONN.		RETURN CONN.	
					DRIVE END	OPP. DRIVE END	NO.	SIZE	NO.	SIZE
020	13.4	42	54.4	4.9		X	1	1½	1	1½
	9.0	180	160	2.0						

McQUAY ITEM NO.	ACCESSORY ARRGMT.		OVERALL LENGTH	MULTIZONE DAMPER SHAFT EXT. LOCATION	AIR FRICTION							
	ARRG. NO.	FILTER TYPE			HTG. COIL	CLG. COIL	COIL	MIXING BOX	FILTER	CASING	EXTERNAL	TOTAL
020	A1	1		–	–	.47	–	–	.11	.43	.38	1.39

NOTES:
1. Units constructed and tested per ARI 430. Par. 2.2.1 b. A.H.U.
2. Dual temperature coil.
3. Adjustable motor sheave.
4. Freestanding spring vibration isolators. Par. 3.2

*Coil Position Code: 18 = in auxiliary coil section; 21 = 1st coil in std. coil sect. or coil in cold deck of blow-thru unit; 24 = 2nd coil in std. coil sect. or coil in hot deck of blow-thru unit; 27 = 3rd coil in std. coil sect.; PH = preheat (before 1st std. sect. of unit); RH = reheat (before fan section).

McQUAY GROUP
McQuay-Perfex Inc.
P.O. Box 1551, Minneapolis, MN 55440

SEASONMASTER
LOW AND MEDIUM PRESSURE CENTRAL STATION AIR CONDITIONING UNITS
UNIT SIZES 103 THROUGH 111 (VERTICAL)

CERTIFIED DRAWING
265539Y

TYPES LSL & MSL

McQuay certifies that it will furnish equipment in accordance with this drawing and specifications, and subject to its published warranty. Purchaser's approval of this drawing signifies that the equipment is acceptable under the provisions of the job specifications. Any change made hereon by any person whomsoever is subject to acceptance by McQuay at its home office.

GENERAL SPECIFICATIONS

CABINET – Galvanized steel structural frame and panels. Access doors and removable panels provide complete accessibility to interior.
FANS – Galvanized steel dynamically balanced. Blades riveted to rims and center plate. Cast iron hubs.
HOUSINGS – Galvanized steel, die-formed with spot welded seams.
SHAFTS – Solid high carbon steel sized so that the operating speed is well below the first critical speed.
SHEAVES – Machined cast iron, "V" groove type, key seated to shaft.
MOTOR MOUNT – Adjustable for varying belt tension.
BEARINGS – Self-aligning, ball type with grease fittings and extended lube lines.
BELT GUARDS – Galvanized steel with fan shaft tachometer opening.
INSULATION – Neoprene coated 1" glass fiber. Meets NFPA 90A standards.
DRAIN PAN – Galvanized steel, inner pan covered with protective mastic coating and thermally isolated from bottom pan with 1" glass fiber insulation.

CERTIFIED PERFORMANCE DATA
CENTRAL STATION AIR HANDLING UNITS

SOLD TO: Ramsey Air Conditioning, Inc.
Jacksonville, NC

McQUAY ORDER NO.:
G.O.:
DATE DR.: 3-14-84
CUST. P.O.: 0519

JOB: Unaccompanied Enlisted Personnel Housing
Marine Corps Base
Camp Lejeune, NC

REP.: Hoffman & Hoffman
REP. P.O.: 22-1115

12 COPIES | X FOR APPR'L | FOR RECORD

CONSULTING ENGINEER:
J. N. Pease, Assoc.
Charlotte, NC

REV. NO.	BY	DATE	WAS

McQUAY ITEM NO.	TAG	QTY.	UNIT MODEL NO.	UNIT ARRGMT.	FAN DISCHARGE NO.	FAN TYPE	CFM	OUTLET VELOCITY
030	AHU- 7 & 8	4	LSL-106	V-101	1	FC	2100	1105

McQUAY ITEM NO.	RPM	BHP	MOTOR DATA				
			MHP	RPM	VOLTAGE	NEMA FRAME	FURNISHED BY
030	840	0.66	1.0	1800	208-60-3	143T	McQuay

McQUAY ITEM NO.	COIL MODEL NO.	COIL* POS.	COIL FACE AREA	COIL FACE VEL.	TOTAL BTUH	SENSIBLE BTUH	ENT. AIR		LVG. AIR	
							D.B.	W.B.	D.B.	W.B.
030	4WH1004H	21	5.5	384	71,915	49,669	79.0	66.0	56.0	55.0
					–	92,000	64.6	–	105.0	–

McQUAY ITEM NO.	GPM STEAM PRESS. OR REF.	ENT. H_2O OR SUCT. TEMP.	LVG. H_2O TEMP.	WATER PRESS. DROP	CONN. LOCATION		SUPPLY CONN.		RETURN CONN.	
					DRIVE END	OPP. DRIVE END	NO.	SIZE	NO.	SIZE
030	12.0	42	53.8	4.1		X	1	$1\frac{1}{2}$	1	$1\frac{1}{2}$
	8.0	180	157	2.2						

McQUAY ITEM NO.	ACCESSORY ARRGMT.		OVERALL LENGTH	MULTIZONE DAMPER SHAFT EXT. LOCATION	AIR FRICTION							
	ARRG. NO.	FILTER TYPE			HTG. COIL	CLG. COIL	COIL	MIXING BOX	FILTER	CASING	EXTERNAL	TOTAL
030	A1	1			–	.30	–	–	.08	.37	.38	1.13

NOTES: 1. Units constructed and tested per ARI 430.
2. Dual temperature coil.
3. Adjustable motor sheave.
4. Freestanding spring vibration isolators.

Par. 3.2.1 b. A.H.U.
Par. 3.2

*Coil Position Code: 18 = in auxiliary coil section; 21 = 1st coil in std. coil sect. or coil in cold deck of blow-thru unit; 24 = 2nd coil in std. coil sect. or coil in hot deck of blow-thru unit; 27 = 3rd coil in std. coil sect.; PH = preheat (before 1st std. sect. of unit); RH = reheat (before fan section).

McQUAY GROUP
McQuay Perfex Inc.
P.O. Box 1551, Minneapolis, MN 55440

SEASONMASTER
LOW AND MEDIUM PRESSURE CENTRAL STATION AIR CONDITIONING UNITS
UNIT SIZES 103 THROUGH 111 (VERTICAL)

CERTIFIED DRAWING
265539Y

TYPES LSL & MSL

McQuay certifies that it will furnish equipment in accordance with this drawing and specifications, and subject to its published warranty. Purchaser's approval of this drawing signifies that the equipment is acceptable under the provisions of the job specifications. Any change made hereon by any person whomsoever is subject to acceptance by McQuay at its home office.

GENERAL SPECIFICATIONS

CABINET – Galvanized steel structural frame and panels. Access doors and removable panels provide complete accessibility to interior.
FANS – Galvanized steel dynamically balanced. Blades riveted to rims and center plate. Cast iron hubs.
HOUSINGS – Galvanized steel, die-formed with spot welded seams.
SHAFTS – Solid high carbon steel sized so that the operating speed is well below the first critical speed.
SHEAVES – Machined cast iron, "V" groove type, key seated to shaft.
MOTOR MOUNT – Adjustable for varying belt tension.
BEARINGS – Self aligning, ball type with grease fittings and extended lube lines.
BELT GUARDS – Galvanized steel with fan shaft tachometer opening.
INSULATION – Neoprene coated 1" glass fiber. Meets NFPA 90A standards.
DRAIN PAN – Galvanized steel, inner pan covered with protective mastic coating and thermally isolated from bottom pan with 1" glass fiber insulation.

CERTIFIED PERFORMANCE DATA
CENTRAL STATION AIR HANDLING UNITS

SOLD TO:
Ramsey Air Conditioning, Inc.
Jacksonville, NC

JOB: Unaccompanied Enlisted Personnel Housing
Marine Corps Base
Camp Lejeune, NC

CONSULTING ENGINEER:
J. N. Pease, Assoc.
Charlotte, NC

McQUAY ORDER NO.	G.O.	DATE DR.
		3-14-84

CUST. P.O.: 0519
REP.: Hoffman & Hoffman
REP. P.O.: 22-1115
12 COPIES | X FOR APPR'L | FOR RECORD

REV. NO.	BY	DATE	WAS

McQUAY ITEM NO.	TAG	QTY.	UNIT MODEL NO.	UNIT ARRGMT.	FAN DISCHARGE NO.	FAN TYPE	CFM	OUTLET VELOCITY
040	AHU-9	2	LSL-106	V-101	1	FC	2000	1052

McQUAY ITEM NO.	RPM	BHP	MOTOR DATA				
			MHP	RPM	VOLTAGE	NEMA FRAME	FURNISHED BY
040	831	0.58	3/4	1800	208-60-3	56	McQuay

McQUAY ITEM NO.	COIL MODEL NO.	COIL* POS.	COIL FACE AREA	COIL FACE VEL.	TOTAL BTUH	SENSIBLE BTUH	ENT. AIR		LVG. AIR	
							D.B.	W.B.	D.B.	W.B.
040	4WH1004H	21	5.5	366	69,300	49,464	79.0	66.1	55.8	54.9
						82,000	64.4	–	102.0	–

McQUAY ITEM NO.	GPM STEAM PRESS. OR REF.	ENT. H_2O OR SUCT. TEMP.	LVG. H_2O TEMP.	WATER PRESS. DROP	CONN. LOCATION		SUPPLY CONN.		RETURN CONN.	
					DRIVE END	OPP. DRIVE END	NO.	SIZE	NO.	SIZE
040	11.6	42	53.8	3.8		X	1	$1\frac{1}{2}$	1	$1\frac{1}{2}$
	7.8	180	159	1.6						

McQUAY ITEM NO.	ACCESSORY ARRGMT.		OVERALL LENGTH	MULTIZONE DAMPER SHAFT EXT. LOCATION	AIR FRICTION							
	ARRG. NO.	FILTER TYPE			HTG. COIL	CLG. COIL	COIL	MIXING BOX	FILTER	CASING	EXTERNAL	TOTAL
040	A1	1			–	.28	–	–	.07	.35	.38	1.08

NOTES: 1. Units constructed and tested per ARI 430.
2. Dual temperature coil.
3. Adjustable motor sheave.
4. Freestanding spring vibration isolators.

Par. 2.2.1
b. A.H.U.
Par. 3.2

*Coil Position Code: 18 = in auxiliary coil section; 21 = 1st coil in std. coil sect. or coil in cold deck of blow-thru unit; 24 = 2nd coil in std. coil sect. or coil in hot deck of blow-thru unit; 27 = 3rd coil in std. coil sect.; PH = preheat (before 1st std. sect. of unit); RH = reheat (before fan section).

McQUAY GROUP
McQuay Perfex Inc.
P.O. Box 1551, Minneapolis, MN 55440

SEASONMASTER
LOW AND MEDIUM PRESSURE CENTRAL STATION AIR CONDITIONING UNITS
UNIT SIZES 103 THROUGH 111 (VERTICAL)

CERTIFIED DRAWING
265539Y

TYPES LSL & MSL

McQuay certifies that it will furnish equipment in accordance with this drawing and specifications, and subject to its published warranty. Purchaser's approval of this drawing signifies that the equipment is acceptable under the provisions of the job specifications. Any change made hereon by any person whomsoever is subject to acceptance by McQuay at its home office.

GENERAL SPECIFICATIONS

CABINET – Galvanized steel structural frame and panels. Access doors and removable panels provide complete accessibility to interior.
FANS – Galvanized steel dynamically balanced. Blades riveted to rims and center plate. Cast iron hubs.
HOUSINGS – Galvanized steel, die-formed with spot welded seams.
SHAFTS – Solid high carbon steel sized so that the operating speed is well below the first critical speed.
SHEAVES – Machined cast iron, "V" groove type, key seated to shaft.
MOTOR MOUNT – Adjustable for varying belt tension.
BEARINGS – Self-aligning, ball type with grease fittings and extended lube lines.
BELT GUARDS – Galvanized steel with fan shaft tachometer opening.
INSULATION – Neoprene coated 1" glass fiber. Meets NFPA 90A standards.
DRAIN PAN – Galvanized steel, inner pan covered with protective mastic coating and thermally isolated from bottom pan with 1" glass fiber insulation.

CERTIFIED PERFORMANCE DATA
CENTRAL STATION AIR HANDLING UNITS

SOLD TO:
Ramsey Air Conditioning, Inc.
Jacksonville, NC

JOB: Unaccompanied Enlisted Personnel Housing
Marine Corps Base
Camp Lejeune, NC

CONSULTING ENGINEER:
J. N. Pease, Assoc.
Charlotte, NC

McQUAY ORDER NO.:
G.O.:
DATE DR.: 3-14-84
CUST. P.O.: 0519
REP.: Hoffman & Hoffman
REP. P.O.: 22-1115
12 COPIES | X FOR APPR'L | FOR RECORD

REV. NO.	BY	DATE	WAS

McQUAY ITEM NO.	TAG	QTY.	UNIT MODEL NO.	UNIT ARRGMT.	FAN DISCHARGE NO.	FAN TYPE	CFM	OUTLET VELOCITY
050	AHU-10	2	LSL-106	V-101	1	FC	2300	1190

McQUAY ITEM NO.	RPM	BHP	MOTOR DATA				
			MHP	RPM	VOLTAGE	NEMA FRAME	FURNISHED BY
050	896	0.76	1.0	1800	208-60-3	143T	McQuay

McQUAY ITEM NO.	COIL MODEL NO.	COIL* POS.	COIL FACE AREA	COIL FACE VEL.	TOTAL BTUH	SENSIBLE BTUH	ENT. AIR		LVG. AIR	
							D.B.	W.B.	D.B.	W.B.
050	4WH1004H	21	5.5	421	75,659	55,145	78.9	66.0	56.5	55.5
					–	83,000	64.9	–	98.0	–

McQUAY ITEM NO.	GPM STEAM PRESS. OR REF.	ENT. H_2O OR SUCT. TEMP.	LVG. H_2O TEMP.	WATER PRESS. DROP	CONN. LOCATION		SUPPLY CONN.		RETURN CONN.	
					DRIVE END	OPP. DRIVE END	NO.	SIZE	NO.	SIZE
050	12.6	42	53.8	4.4		X	1	1½	1	1½
	8.4	180	160	1.8						

McQUAY ITEM NO.	ACCESSORY ARRGMT.		OVERALL LENGTH	MULTIZONE DAMPER SHAFT EXT. LOCATION	AIR FRICTION							
	ARRG. NO.	FILTER TYPE			HTG. COIL	CLG. COIL	COIL	MIXING BOX	FILTER	CASING	EXTERNAL	TOTAL
050	A1	1			–	.35	–	–	.10	.40	.38	1.23

NOTES:
1. Units constructed and tested per ARI 430.
2. Dual temperature coil.
3. Adjustable motor sheave.
4. Freestanding spring vibration isolators.

Par. 2.2.1
b. AHU.
Par. 3.2

*Coil Position Code: 18 = in auxiliary coil section; 21 = 1st coil in std. coil sect. or coil in cold deck of blow-thru unit; 24 = 2nd coil in std. coil sect. or coil in hot deck of blow-thru unit; 27 = 3rd coil in std. coil sect.; PH = preheat (before 1st std. sect. of unit); RH = reheat (before fan section).

McQUAY GROUP
McQuay-Perfex Inc.
P.O. Box 1551, Minneapolis, MN 55440

SEASONMASTER
LOW AND MEDIUM PRESSURE
CENTRAL STATION AIR CONDITIONING UNITS
UNIT SIZES 103 THROUGH 111 (VERTICAL)

CERTIFIED DRAWING
265539Y

TYPES LSL & MSL

McQuay certifies that it will furnish equipment in accordance with this drawing and specifications, and subject to its published warranty. Purchaser's approval of this drawing signifies that the equipment is acceptable under the provisions of the job specifications. Any change made hereon by any person whomsoever is subject to acceptance by McQuay at its home office.

GENERAL SPECIFICATIONS

CABINET – Galvanized steel structural frame and panels. Access doors and removable panels provide complete accessibility to interior.
FANS – Galvanized steel dynamically balanced. Blades riveted to rims and center plate. Cast iron hubs.
HOUSINGS – Galvanized steel, die-formed with spot welded seams.
SHAFTS – Solid high carbon steel sized so that the operating speed is well below the first critical speed.
SHEAVES – Machined cast iron, "V" groove type, key seated to shaft.
MOTOR MOUNT – Adjustable for varying belt tension.
BEARINGS – Self-aligning, ball type with grease fittings and extended lube lines.
BELT GUARDS – Galvanized steel with fan shaft tachometer opening.
INSULATION – Neoprene coated 1" glass fiber. Meets NFPA 90A standards.
DRAIN PAN – Galvanized steel, inner pan covered with protective mastic coating and thermally isolated from bottom pan with 1" glass fiber insulation.

CERTIFIED PERFORMANCE DATA
CENTRAL STATION AIR HANDLING UNITS

SOLD TO: Ramsey Air Conditioning, Inc.
Jacksonville, NC

McQUAY ORDER NO.: G.O.
DATE DR.: 3-14-84
CUST. P.O.: 0519

JOB: Unaccompanied Enlisted Personnel Housing
Marine Corps Base
Camp Lejeune, NC

REP.: Hoffman & Hoffman
REP. P.O.: 22-1115
12 COPIES | X FOR APPR'L | FOR RECORD

CONSULTING ENGINEER: J. N. Pease, Asso.
Charlotte, NC

REV. NO.	BY	DATE	WAS

McQUAY ITEM NO.	TAG	QTY.	UNIT MODEL NO.	UNIT ARRGMT.	FAN DISCHARGE NO.	FAN TYPE	CFM	OUTLET VELOCITY
060	AHU-11	2	LSL-106	V-101	1	FC	2400	1263

McQUAY ITEM NO.	RPM	BHP	MOTOR DATA				
			MHP	RPM	VOLTAGE	NEMA FRAME	FURNISHED BY
060	925	0.88	1.0	1800	208-60-3	1437	McQuay

McQUAY ITEM NO.	COIL MODEL NO.	COIL* POS.	COIL FACE AREA	COIL FACE VEL.	TOTAL BTUH	SENSIBLE BTUH	ENT. AIR		LVG. AIR	
							D.B.	W.B.	D.B.	W.B.
060	4WH1204H	21	5.5	439	81,795	60,974	78.8	66.0	55.6	54.9
					–	90,720	65.0	–	100.0	–

McQUAY ITEM NO.	GPM STEAM PRESS. OR REF.	ENT. H_2O OR SUCT. TEMP.	LVG. H_2O TEMP.	WATER PRESS. DROP	CONN. LOCATION		SUPPLY CONN.		RETURN CONN.	
					DRIVE END	OPP. DRIVE END	NO.	SIZE	NO.	SIZE
060	13.4	42	54.2	4.9		X	1	1½	1	1½
	9.0	180	160	2.0						

McQUAY ITEM NO.	ACCESSORY ARRGMT.		OVERALL LENGTH	MULTIZONE DAMPER SHAFT EXT. LOCATION	AIR FRICTION							
	ARRG. NO.	FILTER TYPE			HTG. COIL	CLG. COIL	COIL	MIXING BOX	FILTER	CASING	EXTERNAL	TOTAL
060	A1	1			–	.44	–	–	0.10	0.41	0.38	1.33

NOTES:
1. Units constructed and tested per ARI 430.
2. Dual temperature coil.
3. Adjustable motor sheave.
4. Freestanding spring vibration isolators.

Par. 2.2.1
b. A.H.U.
Par. 3.2

*Coil Position Code: 18 = in auxiliary coil section; 21 = 1st coil in std. coil sect. or coil in cold deck of blow-thru unit; 24 = 2nd coil in std. coil sect. or coil in hot deck of blow-thru unit; 27 = 3rd coil in std. coil sect.; PH = preheat (before 1st std. sect. of unit); RH = reheat (before fan section).

McQUAY GROUP
McQuay Perfex Inc
P.O. Box 1551, Minneapolis, MN 55440

SEASONMASTER
LOW AND MEDIUM PRESSURE CENTRAL STATION AIR CONDITIONING UNITS
UNIT SIZES 103 THROUGH 111 (VERTICAL)

CERTIFIED DRAWING 265539Y

TYPES LSL & MSL

McQuay certifies that it will furnish equipment in accordance with this drawing and specifications, and subject to its published warranty. Purchaser's approval of this drawing signifies that the equipment is acceptable under the provisions of the job specifications. Any change made hereon by any person whomsoever is subject to acceptance by McQuay at its home office.

GENERAL SPECIFICATIONS

CABINET – Galvanized steel structural frame and panels. Access doors and removable panels provide complete accessibility to interior.
FANS – Galvanized steel dynamically balanced. Blades riveted to rims and center plate. Cast iron hubs.
HOUSINGS – Galvanized steel, die-formed with spot welded seams.
SHAFTS – Solid high carbon steel sized so that the operating speed is well below the first critical speed.
SHEAVES – Machined cast iron, "V" groove type, key seated to shaft.
MOTOR MOUNT – Adjustable for varying belt tension.
BEARINGS – Self-aligning, ball type with grease fittings and extended lube lines.
BELT GUARDS – Galvanized steel with fan shaft tachometer opening.
INSULATION – Neoprene coated 1" glass fiber. Meets NFPA 90A standards.
DRAIN PAN – Galvanized steel, inner pan covered with protective mastic coating and thermally isolated from bottom pan with 1" glass fiber insulation.

CERTIFIED PERFORMANCE DATA
CENTRAL STATION AIR HANDLING UNITS

SOLD TO: Ramsey Air Conditioning, Inc.
Jacksonville, NC

McQUAY ORDER NO.: G.O.
DATE DR.: 3-14-84
CUST. P.O.: 0519

JOB: Unaccompanied Enlisted Personnel Housing
Marine Corps Base
Camp Lejeune, NC

REP.: Hoffman & Hoffman
REP. P.O.: 22-1115
12 COPIES | X FOR APPR'L | FOR RECORD

CONSULTING ENGINEER: J. N. Pease, Assoc.
Charlotte, NC

REV. NO.	BY	DATE	WAS

McQUAY ITEM NO.	TAG	QTY.	UNIT MODEL NO.	UNIT ARRGMT.	FAN DISCHARGE NO.	FAN TYPE	CFM	OUTLET VELOCITY
070	AHU-12	2	LSL-106	V-101	1	FC	2200	1158

McQUAY ITEM NO.	RPM	BHP	MOTOR DATA				
			MHP	RPM	VOLTAGE	NEMA FRAME	FURNISHED BY
070	870	0.70	1.0	1800	208-60-3	143T	McQuay

McQUAY ITEM NO.	COIL MODEL NO.	COIL* POS.	COIL FACE AREA	COIL FACE VEL.	TOTAL BTUH	SENSIBLE BTUH	ENT. AIR		LVG. AIR	
							D.B.	W.B.	D.B.	W.B.
070	5WH1004H	21	5.5	402	73,557	53,222	78.8	66.0	56.3	55.3
						93,139	64.0	–	104.0	–

McQUAY ITEM NO.	GPM STEAM PRESS. OR REF.	ENT. H_2O OR SUCT. TEMP.	LVG. H_2O TEMP.	WATER PRESS. DROP	CONN. LOCATION		SUPPLY CONN.		RETURN CONN.	
					DRIVE END	OPP. DRIVE END	NO.	SIZE	NO.	SIZE
070	12.3	42	53.8	4.3		X	1	1½	1	1½
	8.2	180	157	1.7						

McQUAY ITEM NO.	ACCESSORY ARRGMT.		OVERALL LENGTH	MULTIZONE DAMPER SHAFT EXT. LOCATION	AIR FRICTION							
	ARRG. NO.	FILTER TYPE			HTG. COIL	CLG. COIL	COIL	MIXING BOX	FILTER	CASING	EXTERNAL	TOTAL
070	A1	1			–	0.33	–	–	0.09	0.38	0.38	1.18

NOTES:
1. Units constructed and tested per ARI 430.
2. Dual temperature coil.
3. Adjustable motor sheave.
4. Freestanding spring vibration isolators.

Par. 3.2.1
b. A.H.U.
Par. 3.2

*Coil Position Code: 18 = in auxiliary coil section; 21 = 1st coil in std. coil sect. or coil in cold deck of blow-thru unit; 24 = 2nd coil in std. coil sect. or coil in hot deck of blow-thru unit; 27 = 3rd coil in std. coil sect.; PH = preheat (before 1st std. sect. of unit); RH = reheat (before fan section).

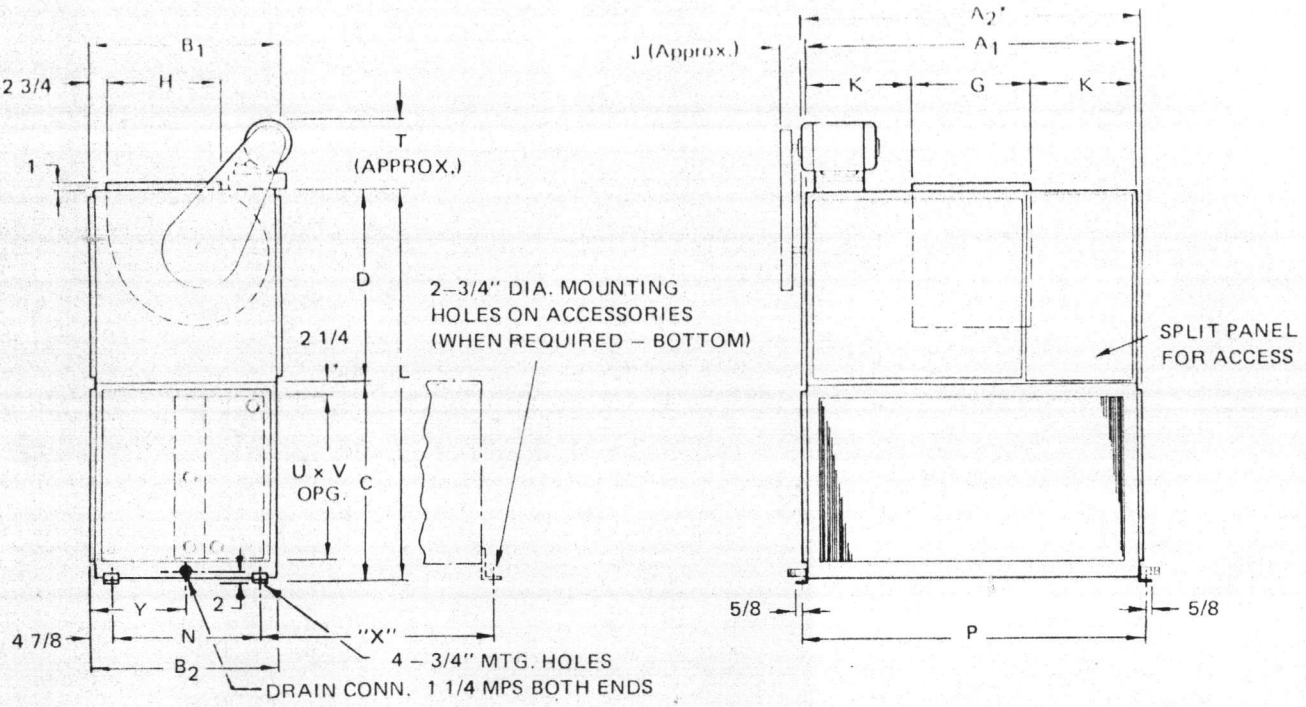

NOTE: "X" dimension is found by adding dimension of the optional sections used plus 5 1/8". Include 1/8" for gasketing where sections bolt together.

PHYSICAL DIMENSIONS (INCHES)

TAG	UNIT SIZE	A1	A2*	B1	B2	C	D	G	H	J	K	L	N	P	T	U	V	Y	X
	103	34	35 1/8	22¾	29 5/8	23	21¾	11 3/4	10 1/4	6½	11 1/8	44 7/8	20 1/2	35¾	15	18¼	29 7/8	15 1/8	
	104	40	41 1/8	25¾	29 5/8	26	24¾	12 1/4	13 1/2	6½	13 7/8	50 7/8	20 1/2	41¾	15	21¼	35 7/8	15 1/8	
	106	50	51 1/8	29	28 1/2	29¼	28	17 1/4	15 7/8	6½	16 3/8	57 3/8	19 3/8	51¾	16	24½	45 7/8	14 1/2	
	108	48	49 1/8	37¾	37 1/4	38	36¾	21 1/8	19 3/8	8	13 7/16	74 7/8	28 1/8	49¾	18	33¼	43 7/8	18 7/8	
	111	63	64 1/8	37¾	37 1/4	38	36¾	23 1/4	21 5/8	8	19 7/8	74 7/8	28 1/8	64¾	18	33¼	58 7/8	18 7/8	

*Add 4 inches for extra large face area coils.

FILTER DATA

UNIT SIZE	FLAT		ANGULAR		HEAVY DUTY	
	QUANTITY	AREA	QUANTITY	AREA	QUANTITY	AREA
103	2–16 x 20 x 2	4.4	2–16 x 25 x 2	5.6	–	–
104	2–20 x 20 x 2	5.6	4–16 x 20 x 2	8.9	–	–
106	3–16 x 25 x 2	8.4	6–16 x 20 x 2	13.3	–	–
108	2–16 x 20 x 2	–	–	–	–	–
	2–16 x 25 x 2	10.0	6–16 x 25 x 2	16.7	–	–
111	6–16 x 20 x 2	13.3	6–20 x 25 x 2	20.8	9–20 x 20 x 2	25.0

FAN DISCHARGE ARRANGEMENTS

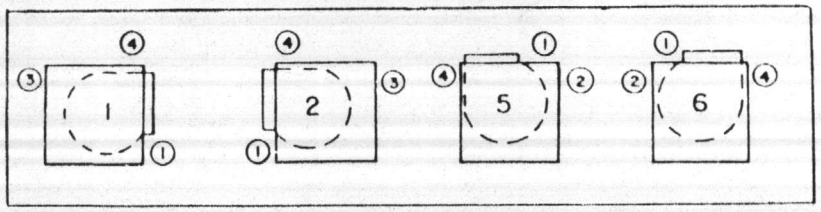

Par. 2.2.1
b. A.H.U.
Par. 3.2

UNIT ARRANGEMENTS

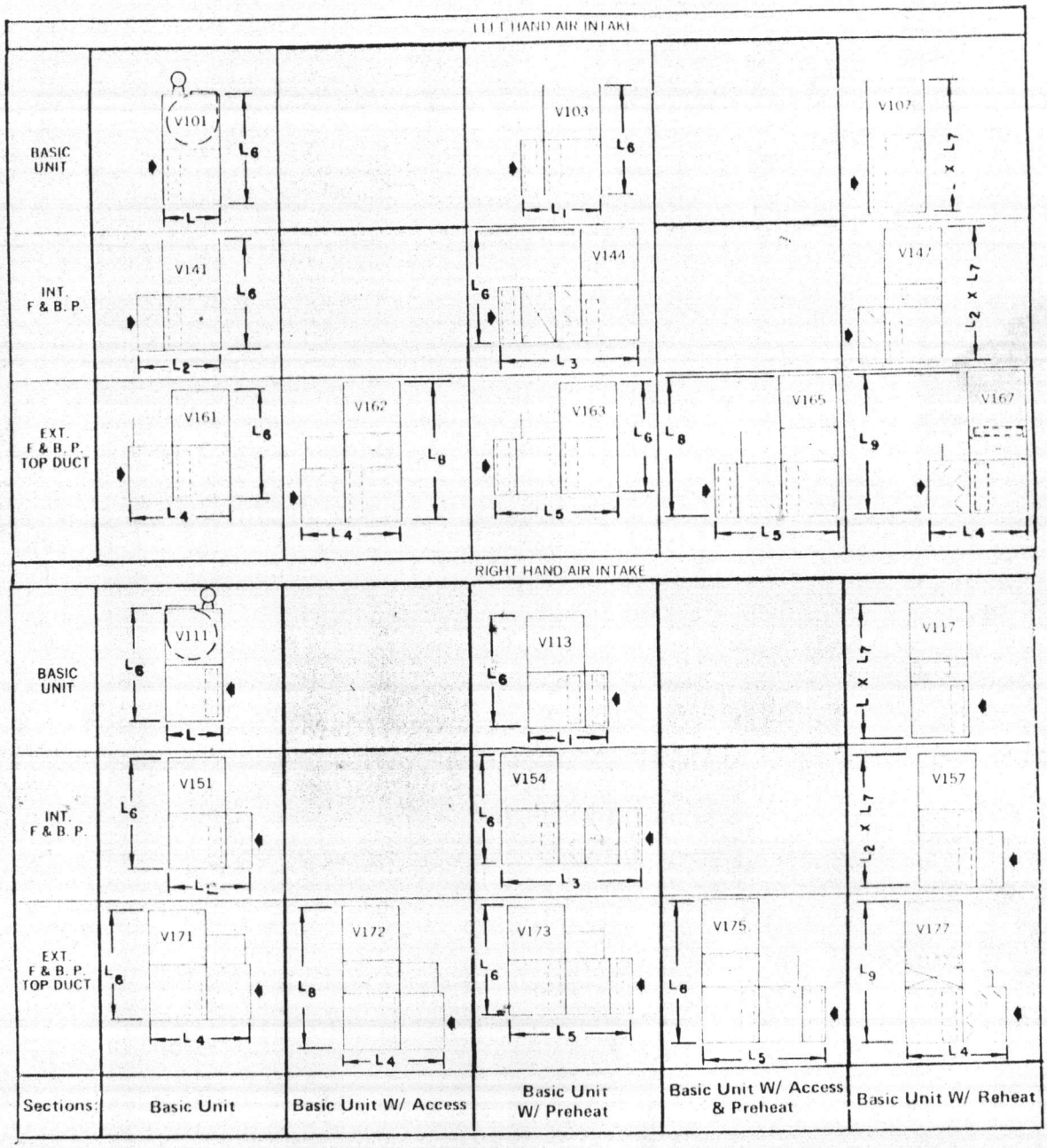

UNIT SIZE	DIMENSIONS (INCHES)									
	L	L1*	L2	L3*	L4	L5*	L6	L7*	L8	L9
103	29 5/8	36 1/4	26 1/2	61 1/4	37 5/8	44 1/4	44 7/8	51 1/2	63	69 5/8
104	29 5/8	26 1/4	37 3/4	62 1/2	37 7/8	44 1/2	50 7/8	57 1/2	69	75 5/8
106	28 1/2	35 1/8	37 5/8	62 3/8	37 3/4	44 3/8	57 3/8	64	74 1/2	82 1/8
108	37 1/4	43 7/8	46 3/8	71 1/8	48 3/8	55	74 7/8	81 1/2	93	99 5/8
111	37 1/4	43 7/8	46 3/8	71 1/8	48 3/8	55	74 7/8	81 1/2	93	99 5/8

NOTE: For overall unit length, add dimensions of accessories not included in above "L" dimension.

ACCESSORY ARRANGEMENTS

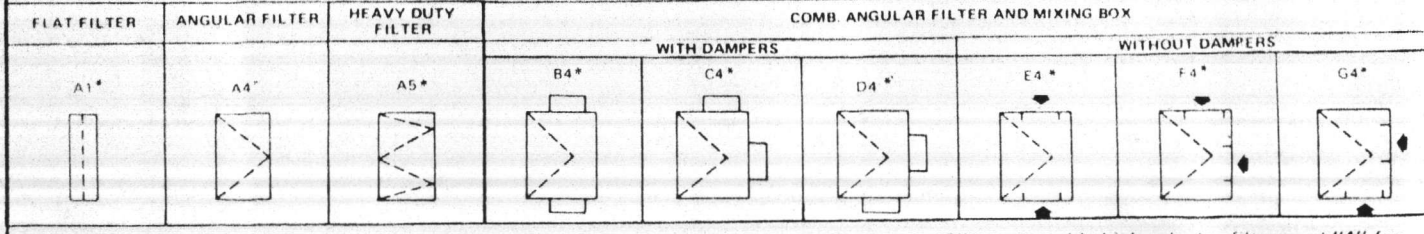

*Replace asterisk with a "0" for no filters; "1" for throwaway filters, "2" for cleanable filters; "3" for cleanable high velocity filters and "4" for throwaway high performance filters.

Par. 2.2.1
b. AHU. Par. 3.2

ACCESSORIES

☐ ACCESS BYPASS SPACER SECTION

OPENING PROVIDED WHEN USED AS BY-PASS SPACER SECTION

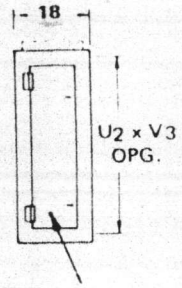

FILTER SECTIONS

☐ FLAT ☐ ANGULAR ☐ HEAVY DUTY *

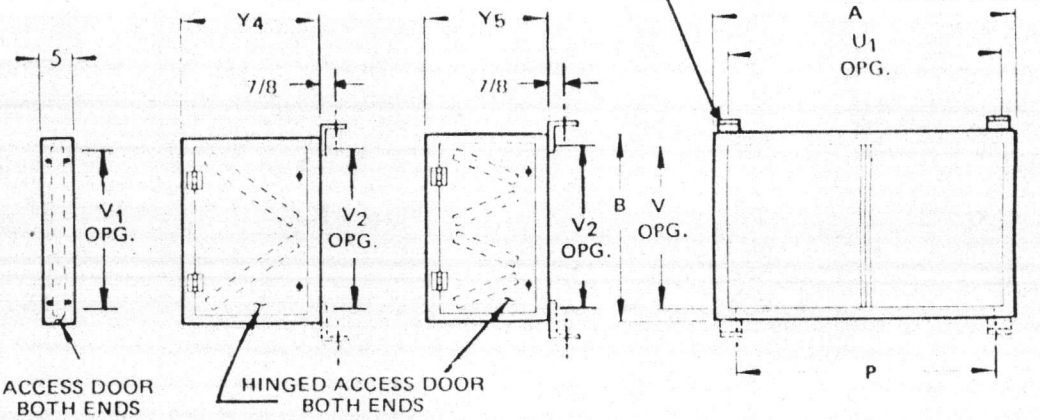

*Available in unit size 111 only.

☐ COMBINATION MIXING BOX AND ANGULAR FILTER SECTION

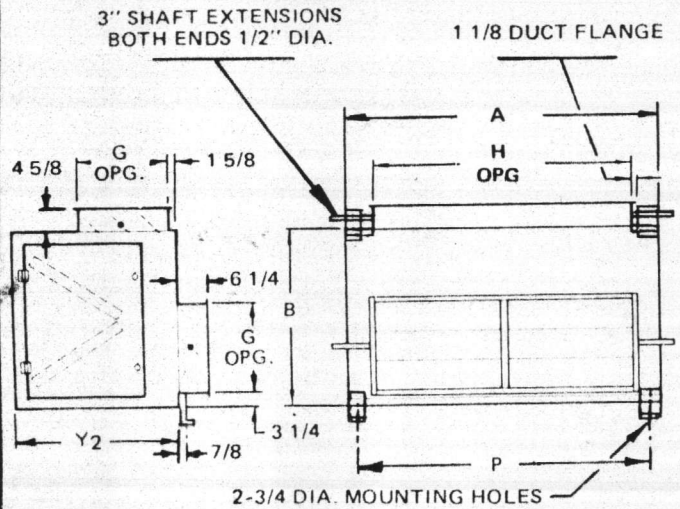

NOTE: When back and bottom openings are required, mixing box is inverted. (Top and bottom openings also available.)

☐ FACE AND BYPASS DAMPER SECTIONS

INTERNAL ☐ EXTERNAL ☐

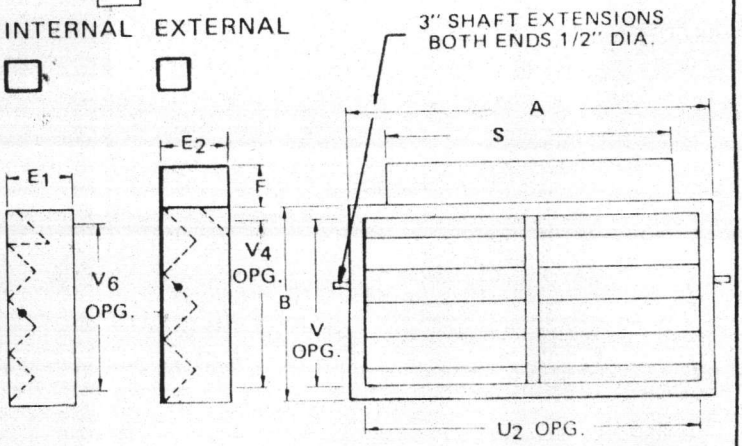

☐ HEATING COIL SECTION (1 & 2 ROW ONLY)*

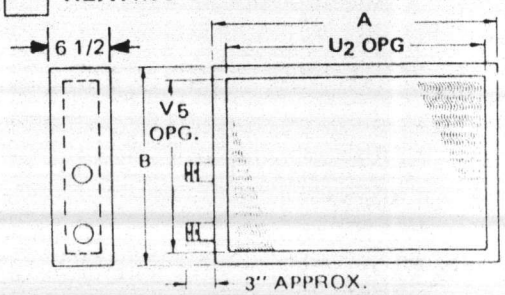

*SMALL & LARGE FACE AREA COILS ONLY

Par. 2.2.1 b. A.H.U.

Par. 2.2

NOTE: When sections are bolted together, add 1/8" for gasketing.

UNIT SIZE	A	B	E1	E2	F	G	H	P	S	T*	U1	U2	V1	V2	V3	V4	V5	V6	Y2	Y4	Y5
103	34	21 5/8	6¼	7 7/8	6	12 3/8	25 3/8	35¼	33 5/8	25½	30 5/8	29 7/8	17 5/8	18¼	17½	17 3/8	17½	18¼	22½	19½	NA
104	40	24 5/8	8	8 1/8	6 5/8	12 3/8	31 3/8	41¼	39 5/8	20½	36 5/8	35 7/8	20	21¼	20½	20 3/8	20½	21¼	23	19	NA
106	50	27 7/8	9	9 1/8	7 1/8	12 3/8	41 3/8	51¼	49 5/8	22	46 5/8	45 7/8	23 1/8	24½	23¾	23	23¾	24½	27¼	22¼	NA
108	48	36 5/8	9	11	9 5/8	18 3/8	39 3/8	49¾	47 5/8	25½	44 5/8	43 7/8	32 1/2	33¼	32½	30 7/8	32½	33¼	33½	26	NA
111	63	36 5/8	9	11	9 5/8	18 3/8	54 3/8	64¼	62 5/8	25½	59 5/8	58 7/8	32 1/2	33¼	32½	30 7/8	32½	33¼	33½	26	23 1/8

NA = Not available. *Maximum clearance required for filter removal.

McQUAY GROUP

McQUAY-PERFEX INC.
13600 INDUSTRIAL PARK BLVD.
P.O. BOX 1551
MINNEAPOLIS, MINNESOTA 55440

CERTIFIED PERFORMANCE DATA

Seasonmaker Seasonaire

FAN-COIL UNITS
HEAT RECOVERY UNITS

SOLD TO: Ramsey Air Conditioning, Inc.
Jacksonville, NC

McQUAY ORDER NO. GO.

DATE DR. 3-14-84

CUST. P.O. 0519

REP. Hoffman & Hoffman

REP. P.O. 22-1115

12 COPIES | X | FOR APPR'L | | FOR RECORD

JOB: Unaccompanied Enlisted Personnel Housing, MCB
Camp Lejeune, NC

CONSULTING ENGINEER:
J. N. Pease, Assoc.
Charlotte, NC

REV. NO.	BY	DATE	WAS

SCHEDULE FOR CERTIFIED DIMENSIONS

TYPE	DWG. NO.	TYPE	DWG. NO.
TSH	380566Y	HSB	331898Y/405017Y
TCH	398212Y	HCB HCF HCC	321963Y
TSF	265503Y		
TSB	265504Y		
TSC	398213Y	SCB, SHB	265513Y
AVD	265506Y	SCD, SHD	265514Y

TAG	McQUAY ITEM #	MODEL NUMBER	QUANTITY LEFT HAND	QUANTITY RT. HAND	QUANTITY NEU. TRAL	CFM	EXT. S.P.	COIL TYPE	COOLING CAPACITY ENT. AIR	ENT. WATER	LVG. WATER	G.P.M	P.D	TBTUH	SBTUH	HEATING CAPACITY ENT. AIR	ENT. WATER	LVG. WATER	GPM	P.D	SBTUH
FCU-1	100	TSC 081E (1)	15			800	-		81.6 / 69.2	42	54	3.8	9	23,000	13,200	54.5	180	166	2.5	4	16500
FCU-2	110	TSF 021D	5			200	-		78/65	42	54	0.8	1.3	4800	3700	68	180	161	0.5	.6	4300

NOTES:

1. Furnished with double deflection discharge grilles.

Par. 2.2.1
C. Fan Coil Units
Par. 3.3

McQUAY GROUP McQUAY-PERFEX INC. P.O. Box 1551, Minneapolis, Mn. 55440	SEASONMAKER CEILING TYPE FAN-COIL UNIT	CERTIFIED DRAWING 398213Y
		TYPE TSC

McQuay certifies that it will furnish equipment in accordance with this drawing and specifications, and subject to its published warranty. Purchaser's approval to this drawing signifies that the equipment is acceptable under the provisions of the job specifications. Any change made hereon by any person whomsoever is subject to acceptance by McQuay at its home office.

GENERAL SPECIFICATIONS

FANS – FORWARD CURVED, BALANCED CENTRIFUGAL FAN WHEELS. UNIT SIZES: 031E – 041E REQUIRE ONE FAN; 061E – 081E TWO FANS; 101E THREE FANS; 121E FOUR FANS.

MOTOR – 115/60/1 PERMANENT SPLIT CAPACITOR MOTORS ARE USED ON ALL SIZES. SLEEVE BEARINGS WITH OILERS, RESILENT MOUNT, INHERENT MOTOR THERMAL PROTECTION WITH AUTOMATIC RESET.

CONTROL – MANUAL THREE SPEED SWITCH WITH "OFF" POSITION AND CONTROL PLATE FOR WALL MOUNTING INTO A STANDARD 2 X 4 X 2 1/8 INCH DEEP JUNCTION BOX (BOX FURNISHED BY OTHERS.)

COIL – SEAMLESS COPPER TUBES WITH ALUMINUM FINS. MANUAL AIR VENTS PROVIDED WITH ALL WATER COILS. 5/8 O.D. SWEAT CONNECTIONS ON ALL COIL SIZES.

DRAIN PAN – DOUBLE PAN, FABRICATED OF 20 GAUGE GALVANIZED STEEL. INSULATED WITH 1 INCH GLASS FIBER. THE INNER PAN IS THERMALLY ISOLATED FROM THE OUTER PAN. UNIVERSAL DRAIN CONNECTIONS.

CABINET MATERIAL AND FINISH – INTERIOR CASING OF 18 GAUGE GALVANIZED STEEL, DECORATIVE CABINET IN 18 GAUGE GALVANIZED STEEL, PHOSPHATIZED AND FINISHED WITH HEAT FUSED LIGHT BEIGE EPOXY COATING.

FILTER – 1 INCH THICK THROWAWAY TYPE.

UNIT ARRANGEMENTS

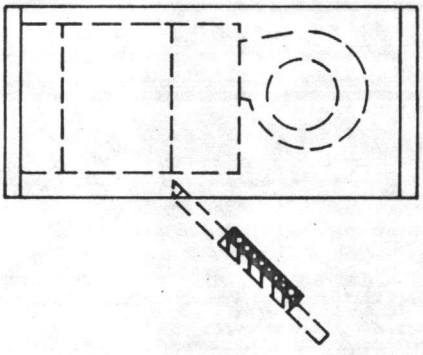

BOTTOM RETURN AIR

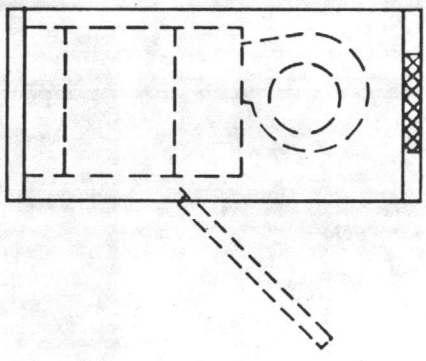

OPTIONAL BACK RETURN AIR

Par. 4.2.1 c. Fan Coil Units Par. 3.3

TSC UNIT SIZE	NOMINAL MOTOR DATA PSC AMPS	NOMINAL MOTOR DATA PSC WATTS	RPM	BACK RETURN AIR FILTER SIZE	BOTTOM RETURN AIR FILTER SIZE
031E	0.9	100	1300	1 x 8 x 26	1 x 8 x 26
041E	1.1	124	1400	1 x 8 x 26	1 x 8 x 26
061E	1.3	131	1150	1 x 8 x 36	1 x 8 x 36
081E	2.2	230	1400	1 x 8 x 36	1 x 8 x 36
101E	2.4	260	1250	1 x 8 x 56	1 x 8 x 56
121E	2.8	310	1250	1 x 8 x 56	1 x 8 x 56

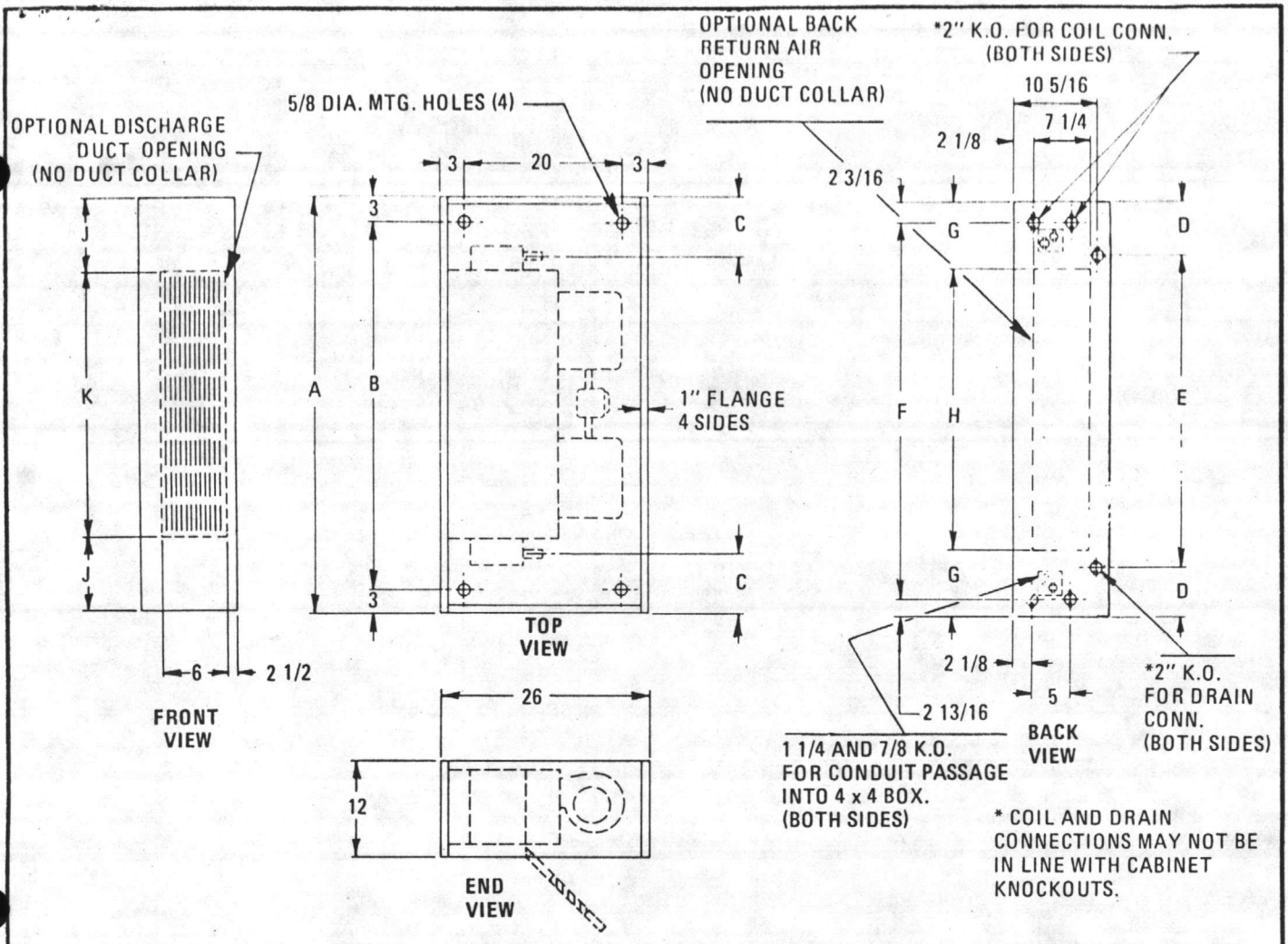

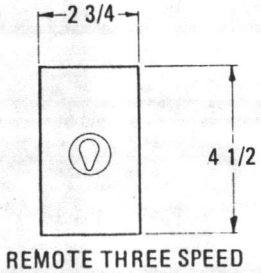

REMOTE THREE SPEED FAN SWITCH WITH OFF POSITION

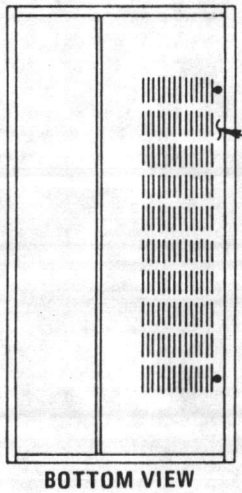

BOTTOM HINGED ACCESS PANEL WITH STAMPED GRILLE AND FILTER

BOTTOM VIEW

Par. 2.2.1
C. Fan Coil Units
Par. 3.3

HAND OF UNIT DETERMINED BY COOLING COIL CONNECTION WHEN FACING FRONT OF UNIT.

UNIT SIZE	COIL CONNECTION SIZE	
	COOLING	HEATING
021E THRU 121E	5/ O.D. SW.	5/8 O.D. SW

TSC UNIT SIZE	UNIT DIMENSIONS (INCHES)									
	A	B	C	D	E	F	G	H	J	K
031E	43	37	9.67	6.67	29.66	38.62	8.88	25.24	9.5	24
041E	43	37	6.67	6.67	29.66	38.62	8.88	25.24	9.5	24
061E	52	46	6.67	6.38	39.24	47.62	8.38	35.24	9.0	34
081E	52	46	6.67	6.38	39.24	47.62	8.38	35.24	9.0	34
101E	78	72	15.67	6.67	64.66	73.62	11.38	55.24	10.0	58
121E	78	72	6.67	6.67	64.66	73.62	11.38	55.24	10.0	58

McQUAY
HVAC DIVISION McQUAY-PERFEX INC.
P.O. Box 1551, Minneapolis, Minn. 55440

SEASONMAKER FLOOR TYPE FAN-COIL UNIT

CERTIFIED DRAWING 461401Y

TYPE TSF

McQuay certifies that it will furnish equipment in accordance with this drawing and specifications, and subject to its published warranty. Purchaser's approval of this drawing signifies that the equipment is acceptable under the provisions of the job specifications. Any change made hereon by any person whomsoever is subject to acceptance by McQuay at its home office.

GENERAL SPECIFICATIONS

FANS – Forward curved, balanced centrifugal fan wheels.
MOTOR – 115/60/1 sleeve bearing with oilers, resilient mount inherent thermal protection with automatic reset. All units have permanent split capacitor tap wound motors as standard.
CONTROL – Manual three-speed fan switch with OFF position mounted on unit under electrical control access door.
COIL – Seamless copper tubes with aluminum fins. Manual air vent supplied with all water coils.
INSULATION – 1/2 inch glass fiber.
DRAIN PAN – Fabricated of 20-gauge galvanized steel and insulated with closed cell insulation. Secondary drain pan of molded polystyrene with 7/8 O.D. connection.
CABINET MATERIAL AND FINISH – Interior casing of 18-gauge galvanized steel decorative cabinet in 18-gauge galvanized steel, phosphatized and finished with fused-on light beige epoxy coating.
FILTER – 1 inch thick glass fiber throwaway.

MODEL NUMBER	NOMINAL MOTOR DATA						RPM	BOTTOM RETURN AIR FILTER SIZE
	115V PSC		277V PSC		115V SHADED POLE			
	AMPS	WATTS	AMPS	WATTS	AMPS	WATTS		
TSF-021D	0.5	57	0.4	57	1.7	125	1050	8 x 18¾ x 1
TSF-031D	0.6	67	0.4	78	1.8	130	1100	8 x 24¾ x 1
TSF-041D	0.7	73	0.5	85	1.3	86	1000	8 x 33¾ x 1
TSF-061D	0.9	99	0.5	120	2.3	165	1050	8 x 43¾ x 1
TSF-081D	1.9	185	0.7	180	–	–	850	10¾ x 43¾ x 1
TSF-101D	2.0	205	0.8	190	–	–	850	10¾ x 55¾ x 1
TSF-121D	3.3	350	1.2	330	–	–	1000	10¾ x 55¾ x 1

Unit Size	Coil Connection Size	
	Cooling	Heating
021D – 121D	5/8 O.D. SW	5/8 O.D. SW

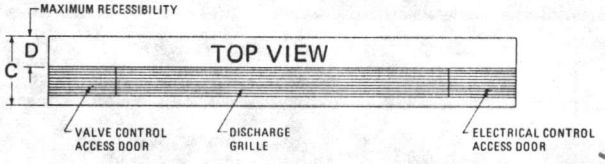

LEFT HAND UNIT SHOWN
Hand determined by facing front of unit.

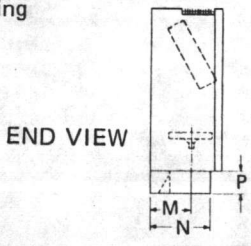

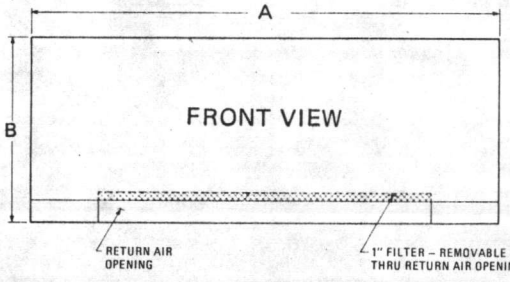

Ref. 2.2.1 C. Fan Coil Units Ref. 3.3

FRESH AIR INTAKE

UNIT SIZES 021D thru 081D

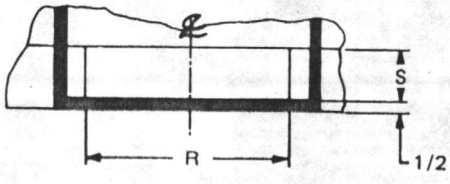

UNIT SIZES 101D and 121D:
Two "R" x "S" openings 2" apart centered on center line.

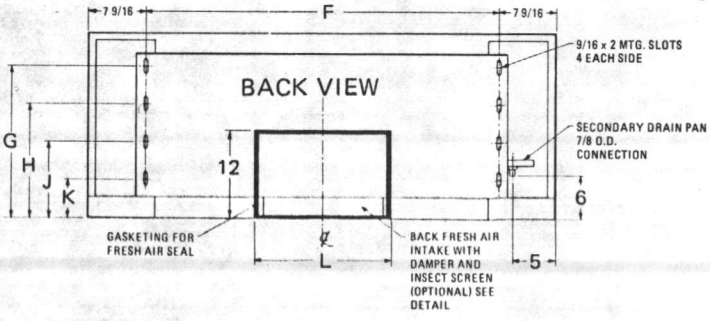

TSF UNIT SIZE	UNIT DIMENSIONS (INCHES)														
	A	B	C	D	F	G	H	J	K	L	M	N	P	R	S
021D	37	25	9¼	3 7/8	21 7/8	20 3/8	15 3/8	10 3/8	5 3/8	18	5 7/16	8	3	10	2½
031D	43	25	9¼	3 7/8	27 7/8	20 3/8	15 3/8	10 3/8	5 3/8	18	5 7/16	8	3	10	2½
041D	52	25	9¼	3 7/8	36 7/8	20 3/8	15 3/8	10 3/8	5 3/8	18	5 7/16	8	3	16	2½
061D	62	25	9¼	3 7/8	46 7/8	20 3/8	15 3/8	10 3/8	5 3/8	18	5 7/16	8	3	16	2½
081D	62	28	12	5 1/8	46 7/8	23	17	12	6	18	8 1/4	10¾	3½	16	3
101D	74	28	12	5 1/8	58 7/8	23	17	12	6	36	8 1/4	10¾	3½	16	3
121D	74	28	12	5 1/8	58 7/8	23	17	12	6	36	8 1/4	10¾	3½	16	3

TSF LEFT-HAND UNITS

STANDARD COOLING WITH OR WITHOUT 1 ROW REHEAT

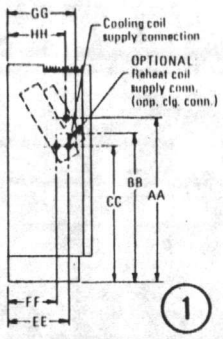

LOW FLOW COOLING WITH OR WITHOUT 1 ROW PREHEAT

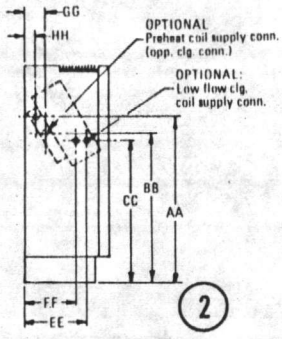

TSF RIGHT-HAND UNITS

LOW FLOW COOLING WITH OR WITHOUT 1 ROW PREHEAT

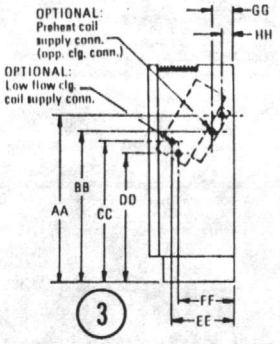

STANDARD COOLING WITH OR WITHOUT 1 ROW REHEAT

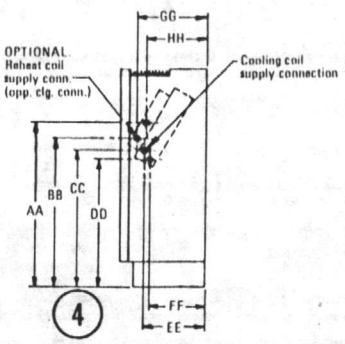

1 — Left-hand standard coil and reheat

MODEL NUMBER	AA	BB	CC	DD	EE	FF	GG	HH
TSF-021D	17	15 15/16	15 1/16	—	6 5/8	5 3/16	7 11/16	7 1/8
TSF-031D	17	15 15/16	15 1/16	—	6 5/8	5 3/16	7 11/16	7 1/8
TSF-041D	17	15 15/16	15 1/16	—	6 5/8	5 3/16	7 11/16	7 1/8
TSF-061D	17	15 15/16	15 1/16	—	6 5/8	5 3/16	7 11/16	7 1/8
TSF-081D	20½	17 7/8	16 1/2	—	9 1/16	7 9/16	9 7/8	8 3/8
TSF-101D	20½	17 7/8	16 1/2	—	9 1/16	7 9/16	9 7/8	8 3/8
TSF-121D	20½	17 7/8	16 1/2	—	9 1/16	7 9/16	9 7/8	8 3/8

2 — Left-hand low flow cooling and preheat

MODEL NUMBER	AA	BB	CC	DD	EE	FF	GG	HH
TSF-021D	18 1/4	17 3/16	15 3/4	—	7 13/16	6 5/16	2 5/16	1 11/16
TSF-031D	18 1/4	17 3/16	15 3/4	—	7 13/16	6 5/16	2 5/16	1 11/16
TSF-041D	18 1/4	17 3/16	15 3/4	—	7 13/16	6 5/16	2 5/16	1 11/16
TSF-061D	18 1/4	17 3/16	15 3/4	—	7 13/16	6 5/16	2 5/16	1 11/16
TSF-081D	22 5/8	20	17 3/16	—	10 3/16	8 11/16	3	1 1/2
TSF-101D	22 5/8	20	17 3/16	—	10 3/16	8 11/16	3	1 1/2
TSF-121D	22 5/8	20	17 3/16	—	10 3/16	8 11/16	3	1 1/2

3 — Right-hand low flow cooling and preheat

MODEL NUMBER	AA	BB	CC	DD	EE	FF	GG	HH
TSF-021D	18 1/4	17 3/16	15 11/16	14 3/8	6 1/4	5 1/2	2 5/16	1 11/16
TSF-031D	18 1/4	17 3/16	15 11/16	14 3/8	6 1/4	5 1/2	2 5/16	1 11/16
TSF-041D	18 1/4	17 3/16	15 11/16	14 3/8	6 1/4	5 1/2	2 5/16	1 11/16
TSF-061D	18 1/4	17 3/16	15 11/16	14 3/8	6 1/4	5 1/2	2 5/16	1 11/16
TSF-081D	22 5/8	20	17 3/16	15 7/8	8 11/16	7 7/8	3	1 1/2
TSF-101D	22 5/8	20	17 3/16	15 7/8	8 11/16	7 7/8	3	1 1/2
TSF-121D	22 5/8	20	17 3/16	15 7/8	8 11/16	7 7/8	3	1 1/2

4 — Right-hand standard coil and reheat

MODEL NUMBER	AA	BB	CC	DD	EE	FF	GG	HH
TSF-021D	17	15 15/16	15 11/16	14 3/8	6 1/4	5 1/2	7 11/16	7 1/8
TSF-031D	17	15 15/16	15 11/16	14 3/8	6 1/4	5 1/2	7 11/16	7 1/8
TSF-041D	17	15 15/16	15 11/16	14 3/8	6 1/4	5 1/2	7 11/16	7 1/8
TSF-061D	17	15 15/16	15 11/16	14 3/8	6 1/4	5 1/2	7 11/16	7 1/8
TSF-081D	20½	17 7/8	17 3/16	15 7/8	8 11/16	7 7/8	9 7/8	8 3/8
TSF-101D	20½	17 7/8	17 3/16	15 7/8	8 11/16	7 7/8	9 7/8	8 3/8
TSF-121D	20½	17 7/8	17 3/16	15 7/8	8 11/16	7 7/8	9 7/8	8 3/8

ELECTRIC HEAT RELAY CONTROL BOX (081D – 121D)

NOTES:

1. Electric heat field wiring connection on unit sizes 081D through 121D is made at the relay control box which is located opposite the cooling coil connection end. (See drawing at right for exact location of control box.)
2. Unit sizes 021D through 061D are to have the electric heat field wiring connection made at the main control box.

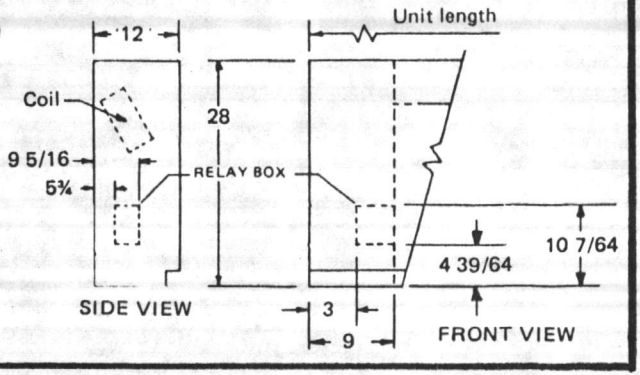

Par. 2.2.1 c. Low Coil Units Par. 2.2

McQUAY GROUP

McQUAY-PERFEX INC.
13600 INDUSTRIAL PARK BLVD.
P.O. BOX 1551
MINNEAPOLIS, MINNESOTA 55440

CERTIFIED PERFORMANCE DATA

SOLD TO: Ramsey Air Conditioning, Inc.
Jacksonville, NC

McQUAY ORDER NO. | GO. | DATE DR. 3-14-84

CUST. P.O. 0519

JOB: Unaccompanied Enlisted Personnel Housing, MCB
Camp Lejeune, NC

REP. Hoffman & Hoffman

REP P.O. 22-1115

12 COPIES | X FOR APPR'L | FOR RECORD

CONSULTING ENGINEER:
J. N. Pease, Assoc.
Charlotte, NC

REV. NO.	BY	DATE	WAS

SCHEDULE FOR CERTIFIED DIMENSIONS

SEASONCON Air Cooled Condensing Units

TYPE RHP	SIZES 050-100	DRAWING NO. 380543Y
TYPE ALP	SIZES 016-033	DRAWING NO. 380532Y
	SIZES 037-078	DRAWING NO. 380609Y
	SIZES 089-159	DRAWING NO. 380599Y

SEASONPAK Air Cooled Water Chiller

TYPE ALR	SIZES 012-030	DRAWING NO. 380531Y
	SIZES 035-065	DRAWING NO. 380610Y
	SIZES 075-130	DRAWING NO. 380600Y

DIRECT EXPANSION COOLER

TYPE CDE	DRAWING NUMBER 265527Y

TAG	McQUAY ITEM NO.	MODEL NUMBER	QTY.	ELEC. CHARAC. V-Hz-P	KW INPUT (1)	CAPAC. TONS	HEAT RECOVERY MODE		SUCT. TEMP. (2)	COOLER (4)				HEAT RECOVERY CONDENSERS				AMB. AIR	CONTROL STEPS	RECOVERED HEAT (5)
							KW Input (1)	Capac. Tons		GPM	EWT	LWT	P.D.	GPM	EWT	LWT	P.D.			
ACC	090	ALR-084	2	460-60-3	96.6	81.1	-	-	-	229	50.5	42	12	-	-	-	-	90	4	-

NOTES:
1. KW Input is for total unit (compressors + fans + controls).
2. Saturated Suction Temperature at the compressor.
3. All units employ Refrigerant 22.
4. .0005 Fouling factor.
5. Total heat rejection in MBH available for heat recovery.

Expanded aluminum coil guard.

ADDITIONAL FEATURES AS CHECKED BELOW:

- [ ] HEAT RECOVERY
- [X] CHILLED WATER FLOW SWITCH (FIELD INSTALLED)
- [ ] SPRING UNIT ISOLATORS [ ] RUBBER-IN-SHEAR UNIT ISOLATORS
- [ ] CONTROL CIRCUIT TRANSFORMER
- [X] LOW AMBIENT OPERATION TO 40 F. AMB. [ ] SPEEDTROL [ ] DAMPERTROL
- [ ] SUCTION, DISCHARGE & OIL GAUGES
- [X] 5-MINUTE COMPRESSOR LOCKOUT TIMER
- [ ] PART WINDING START (COMPRESSOR(S) ONLY)
- [ ] ACOUSTICAL COMPRESSOR ENCLOSURE
- [ ] 4 YEAR EXTENDED COMPRESSOR WARRANTY
- [ ] HOT GAS BYPASS

Par. 2.2.1 d. Water Chiller

Par. 3.4

McQUAY GROUP McQUAY-PERFEX INC.
P.O. Box 1551, Minneapolis, Mn. 55440

SEASONPAK
AIR COOLED WATER CHILLER

CERTIFIED DRAWING 380610Y

TYPE ALR 035A THRU 094A

McQuay certifies that it will furnish equipment in accordance with this drawing and specifications, and subject to its published warranty. Purchaser's approval of this drawing signifies that the equipment is acceptable under the provisions of the job specifications. Any change made hereon by any person whomsoever is subject to acceptance by McQuay at its home office.

GENERAL SPECIFICATIONS

CABINET CONSTRUCTION – Galvanized steel cabinet with baked enamel finish. Continuous galvanized steel channel base.

COMPRESSORS – Accessible hermetic with suction and discharge service valves, force feed lubrication, crankcase heater, inherent motor protection, and initial oil charge. Mounted on glass fiber isolators.

CONDENSER COIL – Copper tube, aluminum fin with integral subcooler section.

CONDENSER FANS – Direct drive propeller type with heavy gauge close mesh guard.

CONDENSER FAN MOTORS – Three phase, open drip-proof ball bearing type with inherent overload protection in all three legs.

COOLER – Shell and through tube with removable heads and internally finned tubes. ASME constructed and stamped. Dual refrigerant circuits (except ALR-035A). Insulated and protected by a sheet metal enclosure. Resistance type heating cable and ambient thermostat for freeze protection to –20F with separate 115 volt power supply (may tap control circuit power supply at field option). Drain and vent fittings.

PIPING AND ACCESSORIES – Manual liquid line shut-off valve, filter drier with replaceable core, liquid line solenoid valve, sight glass/moisture indicator, thermal expansion valve and suction line insulation. Spring loaded 425 psig relief valve and purge valve.

CONTROL CENTER – Weatherproof enclosure and completely wired. Includes: system control stop switch, dual pumpdown switches, oil safety control, high and low pressure cut-outs, water temperature controller, water freeze protection, FANTROL fan cycling pressure switches, compressor and fan motor contactors, time delay fuses for each compressor, fan motor time delay fusing, control circuit and cooler heater fusing, compressor sequence-start timers. A separate 115 volt control circuit power supply is required as standard, or optional control transformer for single point power connection.

All Dimensions in inches

060B, 065B
076A, 084A
094A

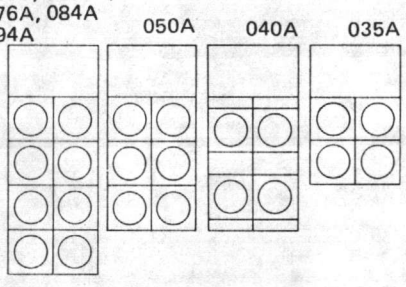

Fan arrangements

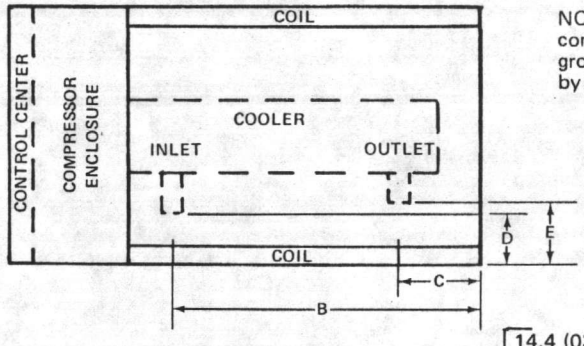

NOTE: All NPS chilled water connections furnished with grooves for "Victaulic" couplings, by others.

Par. 2.2.1 d. Water Chiller
Par. 3.4

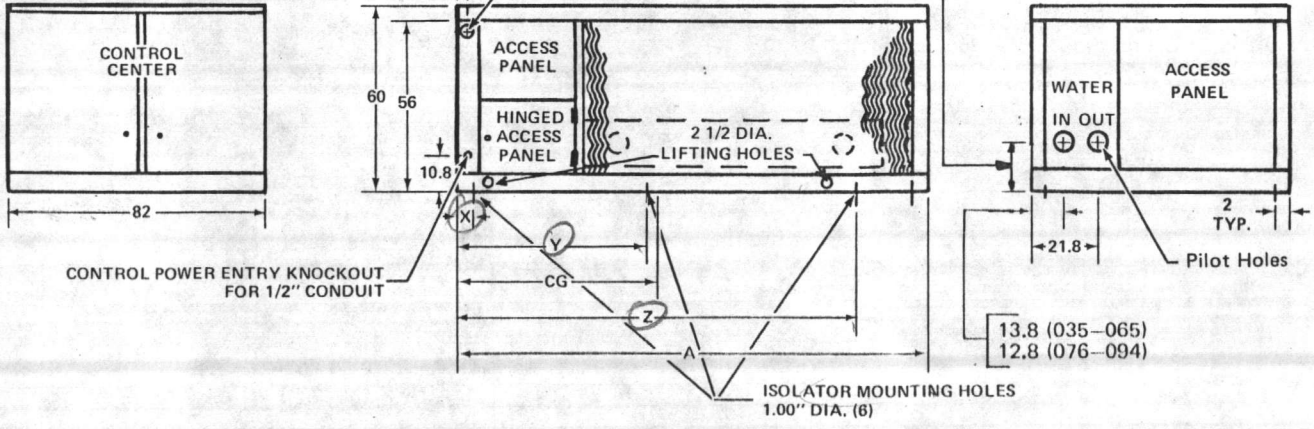

UNIT SIZE	LENGTH A	CENTER OF GRAVITY CG	WATER CONNECTIONS SIZE	B	C	D	E	ISOLATOR LOCATIONS X	Y	Z
035A	128	58	3 NPT	72.5	7.6	15.9	23.9	8.5	50	119.5
040A	168	71	3 NPT	112.5	11.6	15.9	23.9	8.5	50	148.0
050A	168	71	3 NPT	109.4	36.1	15.9	23.9	8.5	50	148.0
060B	208	85	4 NPS	149.4	64.1	18.9	26.9	8.5	50	188.0
065B	208	87	4 NPS	149.4	52.1	18.9	26.9	8.5	50	188.0
076A	208	84	5 NPS	148.3	77.0	18.5	27.4	8.5	50	188.0
084A	208	84	5 NPS	148.3	65.0	18.5	27.4	8.5	50	188.0
094A	208	89	5 NPS	148.3	41.0	18.5	27.4	8.5	50	188.0

ELECTRICAL DATA

UNIT SIZE	RATED LOAD AMPS						UNIT AMPACITY		
	208V/60Hz/3P		230V/60Hz/3P		460/60Hz/3P & 380V/50Hz/3P		208V/60Hz/3P	230V/60Hz/3P	460V/60Hz/3P & 380/50Hz/3P
	COMPRESSORS	FANS	COMPRESSORS	FANS	COMPRESSORS	FANS			
035A	(1) 121	(4) 5.2	(1) 121	(4) 5.2	(1) 61	(4) 2.6	172	172	87
040A	(1) 64 (1) 80	(4) 5.2	(1) 64 (1) 80	(4) 5.2	(1) 32 (1) 41	(4) 2.6	185	185	94
050A	(2) 98	(6) 5.2	(2) 98	(6) 5.2	(2) 53	(6) 2.6	252	252	135
060B	(1) 98 (1) 121	(8) 5.2	(1) 98 (1) 121	(8) 5.2	(1) 52 (1) 61	(8) 2.6	291	291	150
065B	(1) 121 (1) 153	(8) 5.2	(1) 121 (1) 138	(8) 5.2	(1) 61 (1) 69	(8) 2.6	354	335	170
076A	–	(8) 5.2	(2) 140	(8) 5.2	(2) 70.5	(8) 2.6	–	362	182
084A	(2) 177	(8) 5.2	(2) 177	(8) 5.2	(2) 90	(8) 2.6	446	446	226
094A	(2) 196	(8) 5.2	(2) 196	(8) 5.2	(2) 98	(8) 2.6	489	489	244

UNIT SIZE	LOCKED ROTOR AMPS								
	208V/60Hz/3P			230V/60Hz/3P			460V/60Hz/3P & 380V/50Hz/3P		
	COMPRESSORS		FANS	COMPRESSORS		FANS	COMPRESSORS		FANS
	AL START	PW START		AL START	PW START		AL START	PW START	
035A	(1) 565	(1) 340	(4) 40	(1) 565	(1) 340	(4) 40	(1) 283	(1) 150	(4) 20
040A	(1) 308 (1) 428	(1) 188 (1) 250	(4) 40	(1) 308 (1) 428	(1) 188 (1) 250	(4) 40	(1) 154 (1) 214	(1) 82 (1) 100	(4) 20
050A	(2) 470	(2) 292	(6) 40	(2) 470	(2) 292	(6) 40	(1) 235	(2) 121	(6) 20
060B	(1) 470 (1) 565	(1) 292 (1) 340	(8) 40	(1) 470 (1) 565	(1) 292 (1) 340	(8) 40	(1) 235 (1) 283	(1) 121 (1) 150	(8) 20
065B	(1) 565 (1) 625	(1) 340 (1) 388	(8) 40	(1) 565 (1) 594	(2) 340	(8) 40	(1) 283 (1) 297	(1) 150 (1) 147	(8) 20
076A	–	–	(8) 40	(2) 575	(2) 340	(8) 40	(2) 288	–	(8) 20
084A	(2) 1074	(2) 646	(8) 40	(2) 1074	(2) 646	(8) 40	(2) 537	(2) 420	(8) 20
094A	(2) 1070	(2) 644	(8) 40	(2) 1070	(2) 644	(8) 40	(2) 535	(2) 428	(8) 20

NOTES: 1) Compressor RLA values are for wire sizing purposes only and do not reflect normal operating current draw.
2) Unit ampacity is 125% of the rated load amps of the largest motor plus 100% of the rated load amps of all other motors.
3) Allowable voltage tolerances: **50 Hertz electrical systems:** Unit nameplate 380V/50Hz/3P – 360V to 418V.

60 Hertz electrical systems: Unit nameplate 208V/60Hz/3P – 187V to 229V. (Except ALR-065B: 187V to 220V.)
Unit nameplate 230V/60Hz/3P – 207V to 253V.
Unit nameplate 460V/60Hz/3P – 414V to 506V.

FURNISH DISCONNECT SWITCH OF SUITABLE RATING & WITHIN SIGHT OF ACC PER PAR 1.11 p 15011.4 & PAR 4.1, p 15801-12 OF SPECIFICATIONS.

S.L.

PHYSICAL DATA

UNIT SIZE	FAN HP EACH	APPROXIMATE OPERATING WT. – LBS.	OPERATING REFRIGERANT CHARGE – LBS. (R-22)
035A	(4) 1.5	3290	35
040A	(4) 1.5	4280	(2) 25
050A	(6) 1.5	4960	(2) 35
060B	(8) 1.5	5590	(2) 35
065B	(8) 1.5	5900	(2) 44
076A	(8) 1.5	6180	(2) 53
084A	(8) 1.5	6590	(2) 56
094A	(8) 1.5	6700	(2) 58

Par. 2.2.1
d. Water Chiller
Par. 3.4

DRG. NO. 1239 FOR USE WITH G CATALOG

JOB: Unaccompanied Enlisted Personnel Housing
Camp Lejeune, NC

CONTRACTOR: Ramsey Air Conditioning, Inc.
ENGINEER: J. N. Pease Associates
ARCHITECT: J. N. Pease Associates

DRWG. H&H 22-1116R
SHEET 1 **OF** 7
DATE: 4/27/84

MARK	MODEL	NO. REQ'D	MOTOR INFORMATION						CFM	SP	T.S.	REMARKS
			H.P.	R.P.M.	VOLTS	CYC	PH	FRAME				
EF-7	G-100-B	1	1/12	1140	115	60	1	EP	215	.100	3488	BD, DS, UL705 Thermal Overload
EF-8	G-100-B	1	1/12	1140	115	60	1	EP	264	.250	3488	BD, DS, Epoxy Coating, UL705, Thermal Overload
Notes:	1) All fans furnished with aluminum wheel.											
	2) EF-7 and EF-8 furnished with performance baffle. 1/12 HP is smallest motor available exposion proof.											
Spec.#	05-82-2244											
	15801-1											

PP 3.6.2

MODEL G

DIRECT DRIVE CENTRIFUGAL ROOF EXHAUSTERS

DIMENSIONAL DATA

MODEL	A	B	C*	D	Damper	Roof Opening
G-60, 65 70, 75	17	19⅜	12⅛	3	8	10½
G-80, 85 90, 95	19	21¾	14⅝	4	10	12½
G-100, 120	22	28⅞	18	5	12	14½
G-130, 140 150	26	35½	19⅛	5	16	18½
G-160, 170	30	38 3/16	22 1/16	5 7/16	18	20½
G-180	30	42⅜	24⅛	7	18	20½

DIMENSION A - GIVEN IS THE INSIDE DIMENSION OF THE CURB CAP. THE ROOF CURB SHOULD BE 1½" LESS THAN THE CURB CAP TO ALLOW FOR CAULKING AND FLASHING.
*MAY VARY DEPENDING ON MOTOR SIZE.

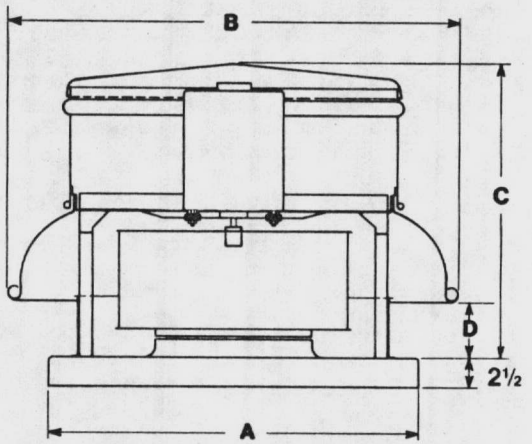

MOTOR OUT OF AIRSTREAM.
ALUMINUM HOOD, SHROUD, CURB CAP, BIRDSCREEN, AND WINDBAND.

ABBREVIATIONS FOR SPECIAL FEATURES

DS—DISCONNECT SWITCH
BD—BACKDRAFT DAMPER
BDM—BACKDRAFT DAMPER MOTORIZED
EX, C—EXTENDED CURB
MS—MANUAL STARTER
PR, C—PREFAB CURB

amca CERTIFIED RATINGS AIR SOUND PERFORMANCE

Greenheck Fan Corporation certifies that the G model shown herein are licensed to bear the AMCA Seal. The ratings shown are based on tests made in accordance with AMCA Standard 210 and AMCA Standard 300 and comply with the requirements of the AMCA Certified Ratings program.

Par. 3.2.1
c. Exhaust Fans
Par. 3.6.2

Greenheck
FAN CORPORATION
SCHOFIELD, WI 54476

DRG. NO. 1214

JOB: Unaccompanied Enlisted Personnel Housing Camp Lejeune, NC

CONTRACTOR: Ramsey Air Conditioning, Inc.

ENGINEER: J. N. Pease Associates

DRWG: H&H 22-1116R
SHEET 2 **OF** 7
DATE 3/27/84

MARK	MODEL	NO. REQD	MOTOR INFORMATION						CFM	SP	T. S.	REMARKS
			H.P.	R.P.M.	VOLTS	CYC	PH	FRAME				
EF-2	SDE-10-32-D	15	1/20	1550	115	60	1	ODP	500	.125	4056	BD, Solid State Speed Controller

Spec: 05-82-2244/15801-9/PP 3.5

SDE PROPELLER FAN

amca CERTIFIED RATINGS — AIR PERFORMANCE — Air Movement and Control Association, Inc.

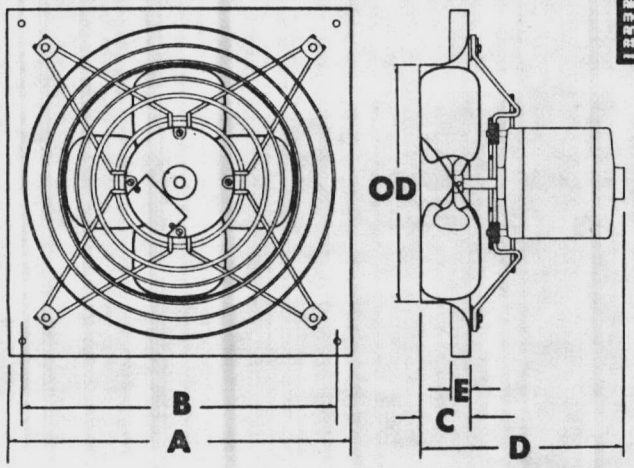

SDE DIM. DATA

MODEL	A	B	C	D	E	Damper	O.D.
SDE— 8	13	12	2	7	1	10x10	8¼
SDE—10	15	13½	2	7	1	12x12	10¼
SDE—12	18	16½	2¾	10¾	1	14x14	12¼
SDE—14	20	18½	3¼	11¼	1	16x16	14¼
SDE—16	22	20½	3¾	11¾	1	18x18	16½
SDE—18	24	22½	3¾	14	1	20x20	18½
SDE—20	26	24½	3¾	14¼	1	22x22	20½

Par. 2.2.1
e. Exhaust Fans
Par. 3.6.2

ABBREVIATIONS FOR SPECIAL FEATURES

B. D. — BACKDRAFT DAMPER
M. S. — MANUAL STARTER
B. D. M. — BACKDRAFT DAMPER MOTORIZED

Greenheck
FAN CORPORATION
SCHOFIELD, WI 54476

JOB: Unaccompanied Enlisted Personnel Housing Camp Lejeune, NC

CONTRACTOR: Ramsey Air Conditioning, Inc.
ENGINEER: J. N. Pease Associates
ARCHITECT: J. N. Pease Associates

DRWG. H&H 22-1116R
SHEET 3 **OF** 7
DATE: 4/27/84

MARK	MODEL	NO. REQ'D	MOTOR INFORMATION						CFM	SP	FAN RPM	T.S.	BHP	REMARKS
			H.P.	R.P.M.	VOLTS	CYC	PH	FRAME						
EF-4	GB-24-5	1	1/2	1800	460	60	3	ODP	4350	.250	556	3570	0.47	BD, DSW, birdscreen and variable pitch motor pulley.
~~EF-1~~	GB10-6	5	1/6	1750	115	60	1	ODP	420	.125	671	1954	.017	BD, DS, UL705 Thermal Overload Protection

Spec: 05-82-2244
15801-10
PP 3.6.2

MODEL GB

BELT DRIVE CENTRIFUGAL ROOF EXHAUSTERS

DIMENSIONAL DATA

MODEL	A	B	C	D	Damper	Roof Opening
GB-10	22	23¾	23⅝	4⅞16	12	14½
GB-14	26	23¾	27½	3 13/16	16	18½
GB-18	30	28	34 3/16	5 9/16	18	20½
GB-21	30	28	34 3/16	5 9/16	18	20½
→ GB-24	34	31 7/16	40¾	5¾	24	26½
GB-30	40	35 15/16	48	8 5/16	30	32½
GB-36	46	38½	56 11/16	8⅞	36	38½
GB-42	52	44 1/16	65 5/32	9¾	42	44½
GB-48	58	47¼	72⅛	11¼	48	50½
GB-54	64	50¾	82¾	14½	54	56½

DIMENSION A - GIVEN IS THE INSIDE DIMENSION OF THE CURB CAP. THE ROOF CURB SHOULD BE 1½" LESS THAN THE CURB CAP TO ALLOW FOR CAULKING AND FLASHING.

Par. 2.2.1
e. Exhaust Fans
Par. 3.6.2

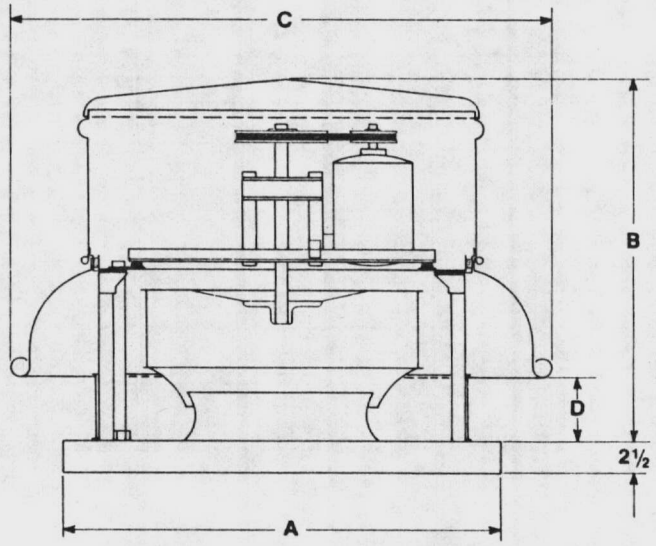

MOTOR & DRIVE OUT OF AIRSTREAM.
ALUMINUM HOOD, SHROUD, CURB CAP,

ABBREVIATIONS FOR SPECIAL FEATURES

- D. SW. - DISCONNECT SWITCH
- B. D. - BACKDRAFT DAMPER
- B. D. M. - BACKDRAFT DAMPER MOTORIZED
- EX. C. - EXTENDED CURB
- M. S. W. - MANUAL START SWITCH
- PR. C. - PREFAB CURB

amca CERTIFIED RATINGS AIR and SOUND PERFORMANCE

Greenheck Fan Corporation certifies that the GB Models shown herein are licensed to bear the AMCA Seal. The ratings shown are based on tests made in accordance with AMCA Standard 210 and AMCA Standard 300 and comply with the requirements of the AMCA Certified Ratings program.

The sound ratings shown were obtained in accordance with AMCA Standard 300, test setup No. 4. Loudness values in Sones at a distance of 5 feet were calculated in accordance with AMCA Standard 301. The AMCA Certified Ratings Sound Seal applies to Sone Ratings only.

Greenheck
Fan Corporation
P.O. Box 128 • Schofield, WI 54476-0128
Ph: 715/359-6171
Moving air around the world

DRG. NO. 1240

JOB: Unaccompanied Enlisted Personnel Housing Camp Lejeune, NC

CONTRACTOR: Ramsey Air Conditioning, Inc.
ENGINEER: J. N. Pease Associates
ARCHITECT: J. N. Pease Associates

DRWG. H&H 22-1116R
SHEET 4 **OF** 7
DATE: 4/27/84

MARK	MODEL	NO. REQ'D.	MOTOR INFORMATION						CFM	SP	FAN RPM	T. S.	REMARKS
			H. P.	R.P.M.	VOLTS	CYC	PH	FRAME					
EF-5	SBP-24-25-4	1	1/4	1800	115	60	1	ODP	1345	.125	530	3320	BD, DS, and variable pitch motor pulley.

SIDEWALL BELT DRIVE

Spec# 05-82-2244
15801-9
PP 3.6

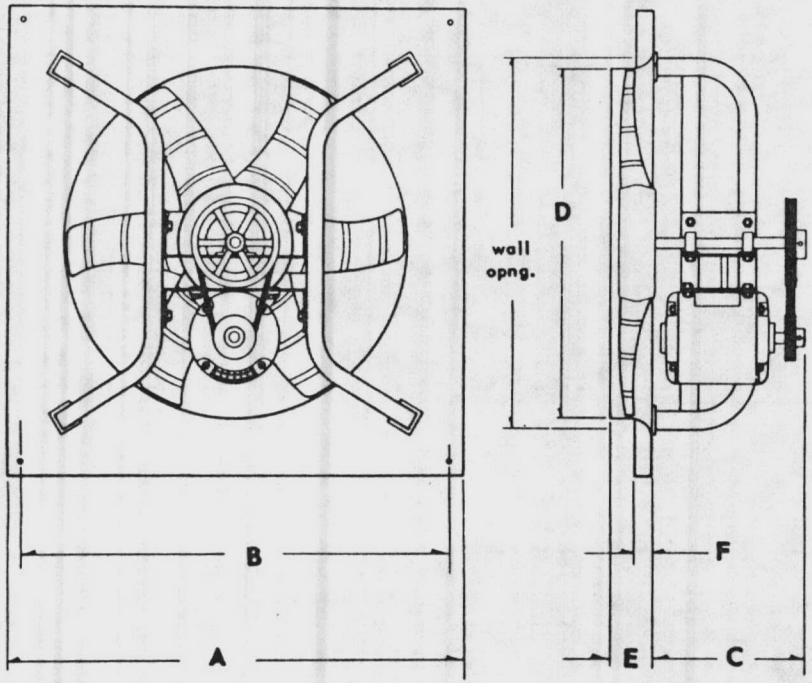

S B P DIMENSIONAL DATA

MODEL	A	B	C	D	E	F	W. O.	DAMPER
S B P - 24	32	30¾	11	24½	3¼	1¼	26½	26
S B P - 30	38	36	13½	30½	4	1¼	32½	32
S B P - 36	44	42¾	15	36½	4⅞	2	38½	38
S B P - 42	50	48¾	16½	42⅝	5¾	2	44½	44
S B P - 48	56	54¾	16½	48⅝	6½	2	50½	50

amca CERTIFIED RATINGS — AIR PERFORMANCE — Air Movement and Control Association, Inc.

ABBREVIATIONS FOR SPECIAL FEATURES

DS—DISCONNECT SWITCH
BD—BACKDRAFT DAMPER
BDM—BACKDRAFT DAMPER MOTORIZED
MS—MANUAL STARTER
MSG—MOTOR SIDEGUARD
OMSG—OPPOSITE MOTOR SIDEGUARD

Par. 2.2.1
c. Exhaust Fans.
Par 3.6

Greenheck
FAN CORPORATION
SCHOFIELD, WI 54476

DRAWING NO. 1162 FOR USE WITH SP CAT.

JOB: Unaccompanied Enlisted Personnel Housing Camp Lejeune, NC

CONTRACTOR Ramsey Air Conditioning, Inc.

ENGINEER J. N. Pease Associates

ARCHITECT J. N. Pease Associates

DRWG. H&H 22-1116R

SHEET 5 **OF** 7

DATE 4/27/84

MODEL	NO. REQ'D	MARK	FAN DATA*												REMARKS
			RPM	AMP	HP		STATIC PRESSURE 0.0	.050	.100	.125	.150	.250	.375	.500	
SP-8	1	EF-6	1550	.6	1/125	CFM	110	102	94	90	84	45			With RDSP THERMAL OVERLOAD PROTECTION
						SONES	2.3	2.2	2.2	2.1	1.9	1.7			
SP-15			1050	.5	1/150	CFM	127	114	100	92	83				
						SONES	1.6	1.6	1.5	1.4	1.3				
SP-17			1550	.7	1/50	CFM	179	170	160	155	150	132	101		
						SONES	3.4	3.3	3.3	3.2	3.2	3.1	3.0		
SP-25			1050	1.0	1/40	CFM	252	238	222	216	208	167			
						SONES	2.7	2.6	2.6	2.5	2.4	2.1			
SP-27			1550	2.1	1/15	CFM	369	355	346	341	335	315	290	258	
						SONES	5.6	5.6	5.6	5.6	5.5	5.3	5.0	4.8	

SP 8 DIMENSIONAL DATA

Spec: 05-82-2244
15801-9/pp 3.6

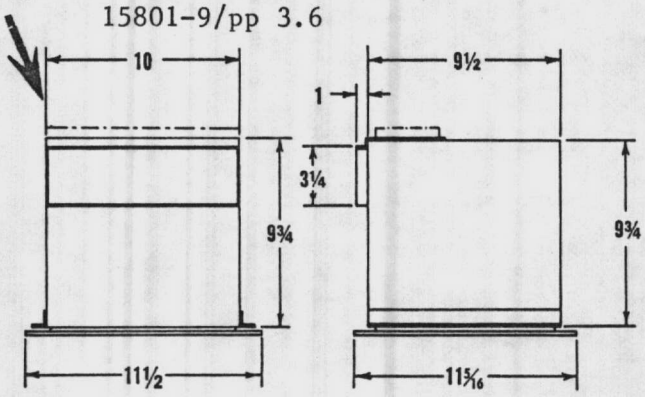

SP 15, 17, 25, 27 DIMENSIONAL DATA

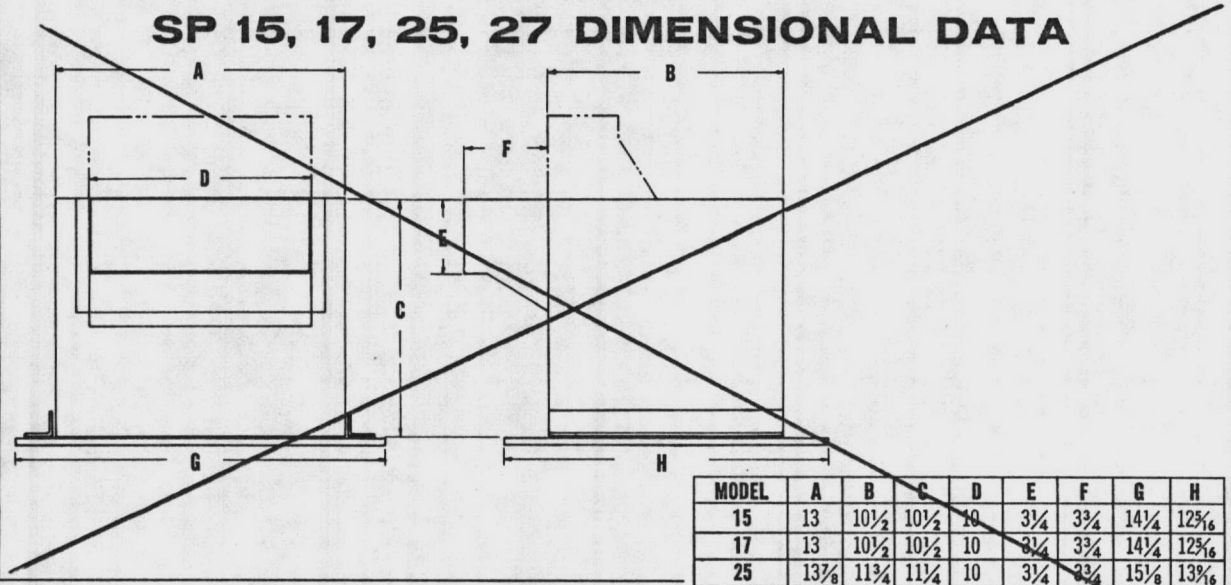

MODEL	A	B	C	D	E	F	G	H
15	13	10½	10½	10	3¼	3¾	14¼	12⁵⁄₁₆
17	13	10½	10½	10	3¼	3¾	14¼	12⁵⁄₁₆
25	13⅜	11¾	11¼	10	3¼	3¾	15⅛	13⅜
27	13⅜	11¾	11¼	10	3¼	3¾	15⅛	13⅜

CERTIFIED RATINGS AIR PERFORMANCE AMCA

CERTIFIED RATINGS SOUND AMCA

*RPM is nominal & performance is based on actual running speed of test with grille, damper, & outlet duct in place.

All Motors are 115 V, 60 Cycle, 1 Phase.

Par. 7.2.1
c. Exhaust Fans.
Par. 3.6

DISCHARGE DUCT CONNECTOR ILLUSTRATED IN HORIZONTAL EXHAUST POSITION. VERTICAL POSITION IN PHANTOM LINE.

MOTOR SHALL HAVE BUILT-IN THERMAL OVERLOAD PROTECTION. S.L.

Greenheck
GREENHECK FAN & VENTILATOR CORP.
SCHOFIELD, WISCONSIN 54476

DRAWING NO. 1194 FOR USE WITH SP CAT.

JOB: Unaccompanied Enlisted Personnel Housing Camp Lejeune, NC

CONTRACTOR: Ramsey Air Conditioning, Inc.
ENGINEER: J. N. Pease Associates
ARCHITECT: J. N. Pease Associates

DRWG. H&H 22-1116R
SHEET 6 OF 7
DATE: 4/27/84

MARK	ACCESSORY ITEM	NO. REQ'D.	REMARKS
EF-6	RDSP	1	

RDSP
Flat roof discharge cap.

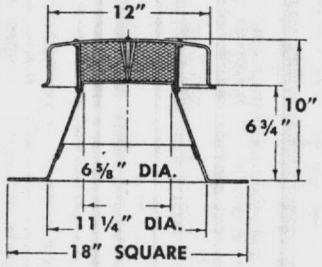

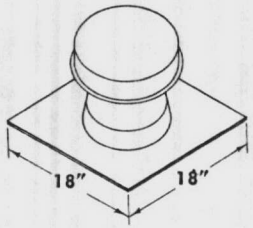

RJSP
Pitch roof discharge.

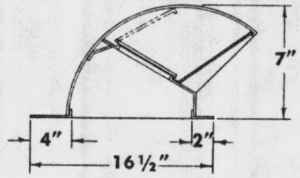

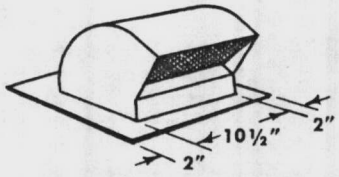

ELSP
Elbow discharge.

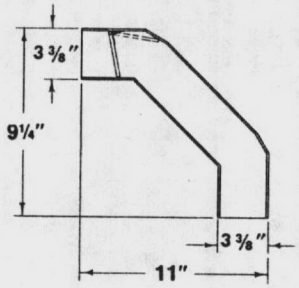

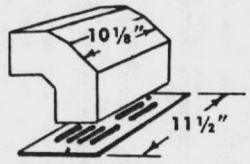

WLSP
Wall louver discharge

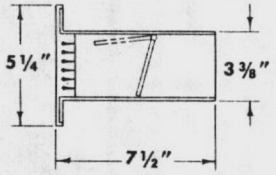

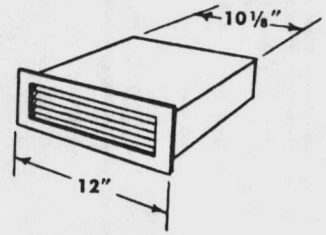

WCSP
Wall hooded discharge.

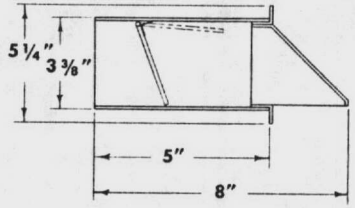

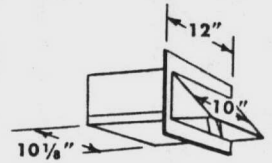

NOTE: RDSP also available with curb cap base for roof curb mounting. Inside dimension of cap 15" square.

MODEL-SP and CSP-8,15,17,25,27 and 50 ACCESSORIES

Par. 2.2.1
C. Exhaust Fans.

Par. 3.6

Greenheck
FAN CORPORATION
SCHOFIELD, WI 54476

JOB: Unaccompanied Enlisted Personnel Housing Camp Lejeune, NC

CONTRACTOR: Ramsey Air Cond., Inc.
ENGINEER: J. N.Pease Associates
ARCHITECT: J. N. Pease Associates

DRWG. H&H 22-1116R
SHEET 7 **OF** 7
DATE 4/27/84

MARK	NO. REQ'D	MODEL	A	B	C	D	DIA.	DAMPER	CURB MATERIAL	SHROUD MATERIAL	HOOD MATERIAL	REMARKS
		GRS-8	19	17 1/2	7 1/4	2 1/4	8 1/4	8 X 8	.051	.051		
		GRS-10	19	20 1/2	8 1/4	3	10 1/4	10 X 10	.051	.051		
Exhaust Hood	80	GRS-12	22	24 3/4	9 7/8	3 1/4	12 1/4	12 X 12	.064	.064		Riser # 1
		GRS-14	24	26	10 3/4	3 3/4	14 5/16	14 X 14	.064	.064		
		GRS-16	26	28 5/8	10 3/4	3 3/4	16 5/16	16 X 16	.064	.064		
		GRS-18	30	32	11	4	18 5/16	18 X 18	.064	.064		
		GRS-20	30	35	11 1/4	4 1/4	20 5/16	20 X 20	.064	.064		
		GRS-24	34	38 3/4	11 3/4	4 3/4	24 3/8	24 X 24	.064	.064		
		GRS-30	40	48	18 27/32	5 7/16	30 1/2	30 X 30	.064	.064	.051	
		GRS-36	46	56 11/16	21 5/16	6	36 11/16	36 X 36	.064	.080	.064	
		GRS-42	52	63 5/32	24 9/32	6 1/4	42 7/16	42 X 42	.064	.080	.064	
		GRS-48	58	72 1/8	26 1/4	6 1/2	48 5/8	48 X 48	.064	.080	.064	

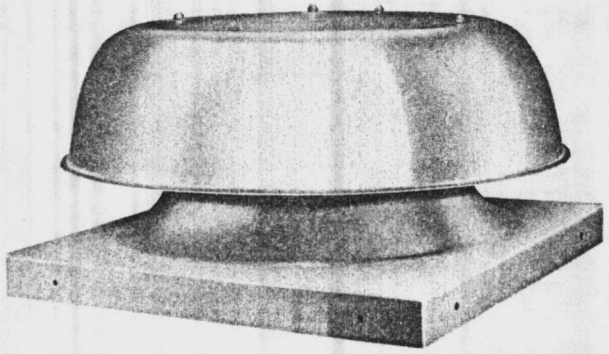

MODEL GRS

Gravity Relief and Intake
Aluminum Construction
With Birdscreen

ACCESSORIES

- Prefab Curbs
- Extended Bases
- Dampers
- Protective Coatings

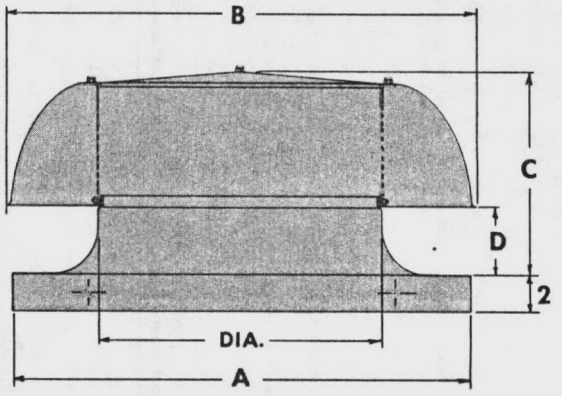

DIMENSION A - GIVEN IS THE INSIDE DIMENSION OF THE CURB CAP. THE ROOF CURB SHOULD BE 1½" LESS THAN THE CURB CAP TO ALLOW FOR ROOFING AND FLASHING.

Greenheck
FAN CORPORATION
SCHOFIELD, WI 54476

Par. 2.2.1
e. Exhaust Fans.
Par. 3.6

Morgan Sales & Associates

2702 GREENBAY ROAD • FAYETTEVILLE, NORTH CAROLINA 28303
TELEPHONE: (919) 484-5796

PROJECT----------UNACCOMPANIED ENLISTED PERSONNEL HOUSING

LOCATION----------MARINE CORPS BASE CAMP LEJEUNE, NORTH CAROLINA

MECHANICAL CONTRACTOR----------RAMSEY AIR CONDITIONING

ENGINEER----------DEWEY R. WINCHESTER

MANUFACTURER----------BROAN MANUFACTURING COMPANY

480 - "EF-3" - Broan Model 689 toilet wall exhaust fans capable of 60cfm at 0.15" external static pressure, with removable grille, back draft damper, and impedance protection on motor. Tested and rated in accordance with HVI (Housing Ventilating Institute) standards.

Submitted under Section 15801, page 15801-10, paragraph 3.6.3.

MOTOR SHALL HAVE BUILT-IN THERMAL OVERLOAD PROTECTION TO PREVENT OVERHEATING OF THE MOTOR DUE TO OVERLOAD & FAILURE TO START.

S.L.

Pa 2.2.1
e. Exhaust fans
Pa 3.6.3

BOX 33442
RALEIGH, N. C. 27606
(919) 851-0603

P. O. BOX 29146
GREENSBORO, N. C. 27408
(919) 643-6156

143 PINECREST PKWY.
WILMINGTON, N. C. 28401
(919) 343-1257

Housing - Fan Wheel Constr

Project	UEPH
Location	MCB, Camp LeJeune, N.C.
Architect	J.N. PEASE ASSOC.
Engineer	D.R. Winchester
Contractor	Ramsey Air Cond.
Submitted by	Tom Burton
Date	3-9-84

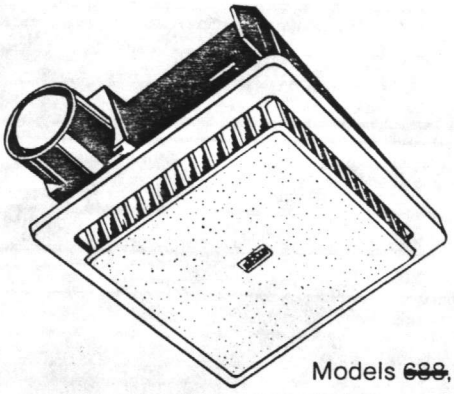

Models ~~688~~, 689

Model 689 Ceiling/Wall Fan
- 60 CFM, 3.5 Sones
- For bathrooms up to 55 sq. ft.
- Fits 3" duct

Fans Feature:
- Unbreakable, molded impeller
- Plug-in, lifetime-lubricated motor
- Molded matte white grille, 10" square
- Torsion spring grille mounting —no tools needed
- Compact housing 8" x 8-1/4" x 3-3/4" deep; fits easily between wall studs
- Double-strength steel mounting flanges with keyhole slots for fast, solid installation
- Molded duct fitting with 1-1/2" long tapered sleeve for easy, positive duct connection; fits 3" duct
- Quiet damper prevents cold backdrafts—no metallic clatter

BROAN®
the fresh air people

New extra quiet
WALL OR CEILING VENTILATORS

All models feature slim design steel housing, 8 x 8¼ x 3¾ in. ~~(670 is 8 x 8¼ x 5¾ in.)~~, all welded construction with receptacle for plug-in motor. Double gauge steel mounting ears with keyhole slots facilitate installation.

A new high impact plastic damper/duct connector which is air-tight snaps onto housing — fits 3 in. round duct ~~(670 fits 4 in. duct)~~. Built-in, self-closing damper prevents backdrafts; large collar allows for easy taping to duct.

Complete, compact motor assembly installs with one screw. Prewired motor plugs into housing receptacle. Lifetime lubricated motor is guaranteed for five years.

TESTED CERTIFIED HVI HOME VENTILATING INSTITUTE

Air delivery ratings for all Broan ventilators are certified by the Home Ventilating Institute (based on independent tests made by the Texas Engineering Experiment Station at Texas A & M University) and are rated in terms of cubic feet per minute (CFM). Ducted fans and hoods are rated at 0.1" static pressure; direct discharge wall fans are rated at 0.03" static pressure.

Reference	Quan.	Remarks
"EF-3"	480	Fan Performance Curve Attached Pa 2.2.1 C. Exhoust Fans. Pa 3.6.3

TEXAS ENGINEERING EXPERIMENT STATION

COLLEGE STATION, TEXAS

PERFORMANCE DATA FOR BROAN MFG. CO. INC., BROAN ~~NAUTILUS~~, 689 ~~N689~~, 4 5/8 INCH

DATE OF TEST - DECEMBER 9, 1980

1.	DETERMINATION NUMBER	1.00000	2.00000	3.00000	4.00000
2.	FAN MOTOR SPEED, RPM	2205.00000	2305.00000	2390.00000	2525.00000
3.	INPUT TO FAN MOTOR, AMPERES	0.79500	0.79000	0.78000	0.77000
4.	INPUT TO FAN MOTOR, VOLTS	120.00000	120.00000	120.00000	120.00000
5.	INPUT TO FAN MOTOR, WATTS	50.00000	50.00000	49.00000	48.00000
6.	INLET AIR TEMPERATURE, D.B., DEG. F.	70.40000	70.30000	70.20000	70.20000
7.	INLET AIR TEMPERATURE, W.B., DEG. F.	56.00000	56.00000	55.90000	56.00000
8.	BAROMETRIC PRESSURE, IN. HG.	30.00000	30.00000	30.00000	30.00000
9.	INLET AIR DENSITY, LB./CU. FT.	0.07475	0.07477	0.07478	0.07478
10.	NOZZLE AIR TEMPERATURE, D.B., DEG. F.	72.10000	72.20000	72.30000	72.50000
11.	NOZZLE AIR DENSITY, LB./CU. FT.	0.07451	0.07451	0.07451	0.07449
12.	DIFFERENTIAL NOZZLE PRESSURE	1.60000	1.53000	1.44000	1.29500
13.	SUMMATION OF NOZZLE AREAS, SQ. FT.	0.01486	0.01486	0.01486	0.01486
14.	FAN CAPACITY, CFM	72.74768	71.10627	68.94820	65.34477
15.	OBSERVED STATIC PRESSURE	0.00000	0.03000	0.10000	0.19500
16.	TOTAL PRESSURE AT FAN OUTLET	0.13705	0.16100	0.22322	0.30569
17.	VELOCITY PRESSURE AT FAN OUTLET	0.13705	0.13100	0.12322	0.11069
18.	STATIC PRESSURE AT FAN OUTLET	0.00000	0.03000	0.10000	0.19500

VALUES CORRECTED FOR STANDARD AIR DENSITY

19.	FAN CAPACITY, CFM	72.74768	71.10627	68.94820	65.34477
20.	TOTAL PRESSURE AT FAN OUTLET	0.13794	0.16207	0.22470	0.30777
21.	VELOCITY PRESSURE AT FAN OUTLET	0.13794	0.13187	0.12404	0.11144
22.	STATIC PRESSURE AT FAN OUTLET	0.00000	0.03020	0.10066	0.19633
23.	INPUT TO FAN MOTOR, AMPERES	0.80018	0.79525	0.78518	0.77525
24.	INPUT TO FAN MOTOR, WATTS	50.32558	50.33206	49.32525	48.32721
25.	CFM PER WATT	1.44554	1.41274	1.39783	1.35213

NOTE - ALL PRESSURES ARE INCHES OF WATER
UNLESS OTHERWISE STATED.

Ra. 2.2.1
c. Exhaust Fans
Pa 5.6.3

STEAM TO HOT WATER HEAT EXCHANGER

1 - Mark HE-1, Armstrong Model WS-124-2, 12 3/4" diameter, 54 3/4" long, 2 pass, shell and tube, ASME constructed.

Selection Calculations

CONDITIONS: 315 GPM, 159.7°F EWT, 180°F LWT, 5.0 maximum water pressure drop, 6.0 feet per second maximum velocity, 15 PSI steam, .001 minimum fouling factor.

Selection:
Clean Tube Factor - 9.5
Tube Velocity - 5.2
Pressure Drop - 1.09
Correction Factor - .001 Fouling
Fouling at 5.2 tube velocity = 9.5 x 1.58% = 15.01
Tube Temperature Factor required - 15.01

Select Model WS-124-2, with a 15.4 Tube Temperature Factor, 5.2 tube velocity, 1.09 water pressure drop.

Submitted under Section 15801, page 15801-10, paragraph 3.7, and per Fed. Spec. WW-H-191.

Par. 2.2.1
f. H.W. Converter
Par. 3.7

FILE NO.:	5098.95
DATE:	AUG. 15, 1983
SUPERSEDES:	5098.95
DATE:	JAN. 30, 1978

ARMSTRONG
ASME HEAT EXCHANGERS
Type WS
Steam to Water
SUBMITTAL DATA

Customer: RAMSEY AIR COND.
Job Ref.: U.P.E.H., MCB
CAMP LEJEUNE, N.C.
Engineer: DEWEY R. WINCHESTER

• ALL UNITS ARE REGULARLY CONSTRUCTED TO THE ASME CODES •

STANDARD TUBE PITCH IS 15/16" TRIANGULAR

	LOCATION	LOCATION	LOCATION
Heater Number	HE-1	WS-124-2	
No. of Passes		2	
Tube Capacity —		315 GPM	
Tube Temperature — In		159.7°F	
Tube Temperature — Out		180°F	
Steam Pressure — PSI ~~or Temp~~		15	
Press. Drop — Tubes		1.3	
Fouling Factor		.001	
ASME Stamp & Certificate	Yes ☑ No ☐	Yes ☐ No ☐	Yes ☐ No ☐
Saddles	Yes ☐ No ☑	Yes ☐ No ☐	Yes ☐ No ☐

"WS" CONSTRUCTION SPECIFICATIONS

"WS" Heat Exchangers are of the shell and tube type. The tube bundle is of "U" bend construction with the tube ends expanded into a stationary tube sheet. This construction permits ample expansion or contraction for wide temperature variations. A fluid entering the tubes of a 2 or 4 pass unit is heated by steam condensing in the single pass shell. Tube spacers properly support and space each tube for maximum efficiency in steam condensing and drainage.

MATERIALS & PRESSURES

UNIT DIAM.	TUBING COPPER (1)	SHELLS	TUBE PLATES (2)	HEADS (2)	PRESSURES — PSI TEST	WORKING ASME 2 PASS	WORKING ASME 4 PASS	WORKING ASME TYPE B 2 PASS ONLY	MAX. OPER. TEMP.
4"	¾"—18 BWG	Steel	Steel	Cast Iron	225	150	150	150[4]	375°F
6"	¾"—18 BWG	Steel	Steel	Cast Iron	225	150	150	150[4]	375°F
8"	¾"—18 BWG	Steel	Steel	Cast Iron	225	150	150	150[4]	375°F
10"	¾"—18 BWG	Steel	Steel	Cast Iron	225	—	150	150[4]	375°F
10"	¾"—18 BWG	Steel	Steel	Cast Iron	200	125[3]	—	150[4]	375°F
HE-1 → 12"	¾"—18 BWG	Steel	Steel	Cast Iron	200	125[3]	~~125[3]~~	~~150[4]~~	375°F
14"	¾"—18 BWG	Steel	Steel	Cast Iron	200	125[3]	125[3]	150[4]	375°F
16"	¾"—18 BWG	Steel	Steel	Cast Iron	200	125[3]	125[3]	150[4]	375°F
18"	¾"—18 BWG	Steel	Steel	Cast Iron	200	125[3]	125[3]	150[4]	375°F
20"	¾"—18 BWG	Steel	Steel	Cast Iron	200	125[3]	125[3]	150[4]	375°F

(1) Available in other materials — at extra cost.
(2) Available in bronze at extra cost.
(3) Available with fabricated steel flanged heads to meet ASME code for 150 psi working pressure — at extra cost.
(4) Available on 2 — pass only with cast iron flanged heads to meet ASME code for 150 psi working pressure at extra cost.

Par 2.2.1
f. HW Converter
Par. 3.7

TYPE "WS" HEAT EXCHANGERS

HE-1

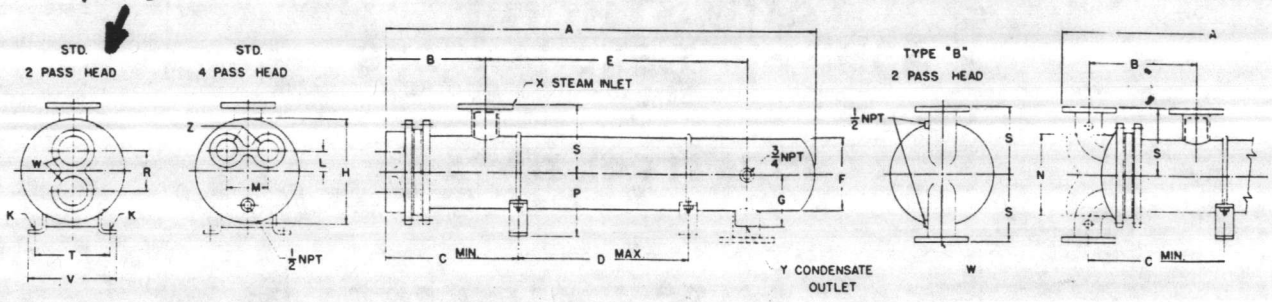

Heater Numbers		2 Pass — Standard			4 Pass — Standard			2 Pass — Type "B"			2 Pass and 4 Pass											Head Dimensions						
																						2 Pass — Standard		4 Pass — Standard			2 Pass — Type "B"	
2 Pass	4 Pass	A	B	C	A	B	C	A	B	C	D	E	F	G	H	K	P	S	T	V	X	Y	W	R	L	M	Z	W	N
WS42-2	WS42-4	28			28			29⅜			9½	15¾									2 NPT	1 NPT							
WS43-2	WS43-4	40			40			41⅜			21½	27¾									2 NPT	1 NPT							
WS44-2	WS44-4	52	7½	10	52	7½	10	53⅜	8	10½	33½	39¾	41½	3½	7¼	¾	4½	3⅜	5½	6¾	2 NPT	1 NPT	1¼ NPT	2⅝	1	2¼	1 NPT	1¼ NPT	4½
WS45-2	WS45-4	64			64			65⅜			45½	51¾									2½ NPT	1¼ NPT							
WS46-2	WS46-4	76			76			77⅜			57½	63¾									2½ NPT	1¼ NPT							
WS47-2	WS47-4	88			88			89⅜			69½	75¾									2½ NPT	1¼ NPT							
WS62-2	WS62-4	28¾			28⅝			30⅜			8	15									1½ NPT								
WS63-2	WS63-4	40¾			40⅝			42⅜			20	27									2 NPT								
WS64-2	WS64-4	52¾			52⅝			54⅜			32	39									2½ NPT								
WS65-2	WS65-4	64¾	8⅝	12	64⅝	8½	12	66⅜	8⅞	12	44	51	6⅝	4⅜	10½	¾	6½	7¾	6¾	8⅛	2½ NPT	1 NPT	2 NPT	3¼	1 19/32	3 3/16	1½ NPT	2 NPT	7
WS66-2	WS66-4	76¾			76⅝			78⅜			56	63									3 NPT								
WS67-2	WS67-4	88¾			88⅝			90⅜			68	75									3 NPT								
WS68-2	WS68-4	100¾			100⅝			102⅜			80	87									3 NPT								
WS82-2	WS82-4	29⅜			29			34¾			4¾	13									2 NPT	1 NPT							
WS83-2	WS83-4	41⅜			41			46¾			16¾	25									2½ NPT	1 NPT							
WS84-2	WS84-4	53⅜			53			58¾			28¾	37									3 NPT	1 NPT							
WS85-2	WS85-4	65⅜	10⅝	14½	65	10¼	14	70¾	12¼	16	40¾	49	8⅜	5⅜	12½	¾	7	8¾	9	10⅜	4 FLG	1 NPT	3 NPT	5	2	4	2 NPT	3 FLG	—
WS86-2	WS86-4	77⅜			77			82¾			52¾	61									4 FLG	1¼ NPT							
WS87-2	WS87-4	89⅜			89			94¾			64¾	73									4 FLG	1¼ NPT							
WS88-2	WS88-4	101⅜			101			106¾			76¾	85									6 FLG	1¼ NPT							
WS89-2	WS89-4	113⅜			113			118¾			88¾	97									6 FLG	1¼ NPT							
WS102-2	WS102-4	30⅛			30⅛			36½			4½	12½									4 FLG	1½ NPT							
WS103-2	WS103-4	42⅛			42⅛			48½			16½	24½									4 FLG	1½ NPT							
WS104-2	WS104-4	54⅛			54⅛			60½			28½	36½									6 FLG	2 NPT							
WS105-2	WS105-4	66⅛			66⅛			72½			40½	48½									6 FLG	2 NPT							
WS106-2	WS106-4	78⅛	11⅝	15¾	78⅛	11⅝	15¾	84½	13½	17⅜	52½	60½	10¾	6⅜	14⅝	⅞	9⅜	9¾	9⅛	11⅛	6 FLG	2 NPT	4 NPT	5⅞	2⅜	4¾	3 NPT	4 FLG	
WS107-2	WS107-4	90⅛			90⅛			96½			64½	72½									6 FLG	2 NPT							
WS108-2	WS108-4	102⅛			102⅛			108½			76½	84½									6 FLG	2 NPT							
WS109-2	WS109-4	114⅛			114⅛			120½			88½	96½									6 FLG	2 NPT							
WS1010-2	WS1010-4	126⅛			126⅛			132½			100½	108½									6 FLG	2 NPT							
[illegible]	[illegible]	42¾			42¾			48¾			13½	22¾									6 FLG	2 NPT							
WS124-2	[illegible]	54¾			54¾			60¾			26½	34¾									6 FLG	2 NPT							
WS125-2	WS125-4	66¾			66¾			72¾			37½	46¾									6 FLG	2 NPT							
WS126-2	WS126-4	78¾	13⅝	19	78¾	13⅝	19	84¾	15⅛	20½	49½	58¾	12¾	7¾	16⅝	⅞	9¾	10¾	11⅝	13⅛	6 FLG	2 NPT	4 NPT	7⅛	[illegible]	[illegible]	[illegible]	[illegible]	
WS127-2	WS127-4	90¾			90¾			96¾			61½	70¾									8 FLG	2½ NPT							
WS128-2	WS128-4	102¾			102¾			108¾			74½	82¾									8 FLG	2½ NPT							
WS129-2	WS129-4	114¾			114¾			120¾			85½	94¾									8 FLG	2½ NPT							
WS1210-2	WS1210-4	126¾			126¾			132¾			97½	106¾									8 FLG	2½ NPT							
WS143-2	WS143-4	43⅛			43⅛			50⅞			12½	22									6 FLG	2 NPT							
WS144-2	WS144-4	55⅛			55⅛			62⅞			24½	34									6 FLG	2 NPT							
WS145-2	WS145-4	67¾			67⅛			74⅞			36½	46									8 FLG	2½ NPT							
WS146-2	WS146-4	79¾	14¾	20¼	79⅛	14⅛	19⅝	86⅞	16⅜	22	48½	58	14	8½	17⅞	1	11⅝	11½	12½	14⅜	8 FLG	2½ NPT	6 NPT	8	3 5/16	5⅞	4 NPT	6 FLG	—
WS147-2	WS147-4	91¾			91⅛			98⅞			60½	70									8 FLG	2½ NPT							
WS148-2	WS148-4	103¾			103⅛			110⅞			72½	82									8 FLG	2½ NPT							
WS149-2	WS149-4	115¾			115⅛			122⅞			84½	94									8 FLG	2½ NPT							
WS1410-2	WS1410-4	127¾			127⅛			134⅞			96½	106									8 FLG	2½ NPT							
WS163-2	WS163-4	44⅜			43⅝			51¼			—	19¾		9½							8 FLG	2½ NPT							
WS164-2	WS164-4	56⅜			55⅝			63¼			19¼	31⅜		9½							8 FLG	2½ NPT							
WS165-2	WS165-4	68⅜			67⅝			75¼			31¼	43¼		9½							8 FLG	2½ NPT							
WS166-2	WS166-4	80⅜	17	23¾	79⅝	16⅛	22¾	87¼	18⅜	25⅛	43¼	55¾	16	9½	19⅞	1	12	12½	14⅝	16½	8 FLG	2½ NPT	6 NPT	9⅛	4	8	4 NPT	6 FLG	—
WS167-2	WS167-4	92⅜			91⅝			99¼			55¼	67¾		9½							8 FLG	2½ NPT							
WS168-2	WS168-4	104⅜			103⅝			111¼			67¼	79¾		12½							10 FLG	3 FLG							
WS169-2	WS169-4	116⅜			115⅝			123¼			79¼	91¾		12½							10 FLG	3 FLG							
WS1610-2	WS1610-4	128⅜			127⅝			135¼			91¼	103¾		12½							10 FLG	3 FLG							
WS183-2	WS183-4	44			44			54			—	18½																	
WS184-2	WS184-4	56			56			66			17	30½																	
WS185-2	WS185-4	68			68			78			29	42½																	
WS186-2	WS186-4	80	16⅜	23	80	16⅜	23	90	19⅛	26¼	41	54½	18	13½	22	1⅛	13⅝	13½	16	18½	10 FLG	4 FLG	6 NPT	11	4⅝	9¼	4 NPT	8 FLG	—
WS187-2	WS187-4	92			92			102			53	66½																	
WS188-2	WS188-4	104			104			114			65	78½																	
WS189-2	WS189-4	116			116			126			77	90½																	
WS1810-2	WS1810-4	128			128			138			89	102½																	
WS203-2	WS203-4	45½		15	44½		15	54⅛			—	13½																	
WS204-2	WS204-4	57½		31	56½		30	66⅛			10½	25½																	
WS205-2	WS205-4	69½		31	68½		30	78⅛			22½	37½																	
WS206-2	WS206-4	81½	23⅛	31	80½	22⅛	30	90⅛	25¼	33	34½	49½	20	14	24	1⅛	14	16	18	20½	12 FLG	4 FLG	8 NPT	10⅝	4⅜	8¾	6 NPT	8 FLG	
WS207-2	WS207-4	93½		31	92½		30	102⅛			46½	61½																	
WS208-2	WS208-4	105½		31	104½		30	114⅛			58½	73½																	
WS209-2	WS209-4	117½		31	116½		30	126⅛			70½	85½																	
WS2010-2	WS2010-4	129½		31	128½		30	138⅛			82½	97½																	

All Dimensions in Inches

Armstrong PUMPS

ARMSTRONG PUMPS INC. • 93 East Avenue, North Tonawanda, N.Y. 14120 (716) 693-8813

FORM NO. 6572C/10M/SCS 8/83

PRINTED IN U.S.A.

Morgan Sales & Associates

2702 GREENBAY ROAD • FAYETTEVILLE, NORTH CAROLINA 28303
TELEPHONE: (919) 484-5796

PROJECT----------UNACCOMPANIED ENLISTED PERSONNEL HOUSING (UPEH)

LOCATION----------MARINE CORPS BASE CAMP LEJEUNE, NORTH CAROLINA

MECHANICAL CONTRACTOR----------RAMSEY AIR CONDITIONING

ENGINEER----------DEWEY R. WINCHESTER

MANUFACTURER----------DUNHAM-BUSH

1 - Mark P-4, Dunham Bush Model CRV-2-2560 duplex steam condensate pump, capable of continuous service for condensate up to 200°F, 30 GPM, at 140' head, with 2 - 3HP, 3500RPM, 460/3/60, pumps, 44 gallon 3/16" wall steel receiver, mechanical alternator, and float control. All other controls and accessories to be furnished by Mechanical Contractor.

Submitted under Section 15801, page 15801-10, paragraph 3.8.3, and per Mil. Spec. MIL-P-17749.

Par. 2.2.1
g. Pumps
Par 3.8.1

BOX 33442
RALEIGH, N. C. 27606
(919) 851-0603

P. O. BOX 29146
GREENSBORO, N. C. 27408
(919) 643-6156

143 PINECREST PKWY.
WILMINGTON, N. C. 28401
(919) 343-1257

PUMP SECTION
FILE NO. 1437

CONDENSATE PUMPS
TYPE CRV

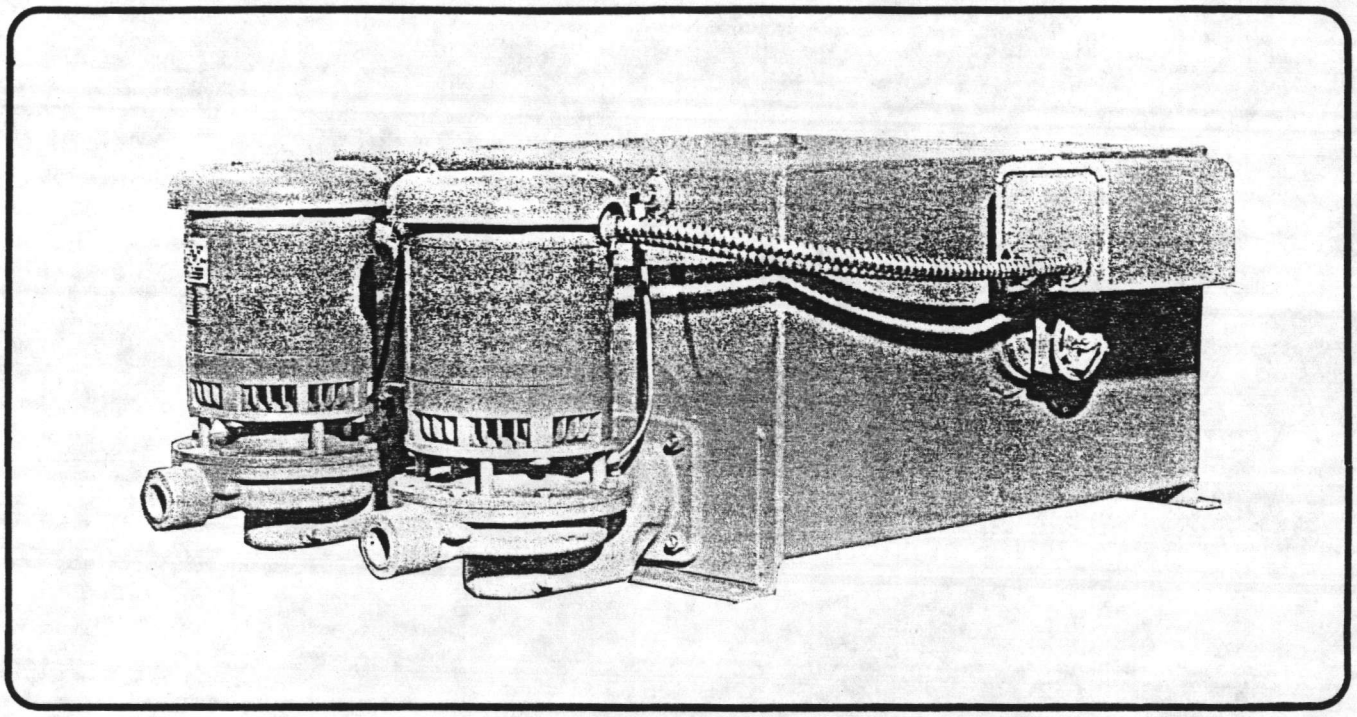

INTRODUCTION

Dunham-Bush Type CRV Condensate Pumps are complete, compact, assemblies for returning water to low pressure boilers from gravity heating systems, from low pressure steam process equipment, or from combinations of both. They are used where low pressure return mains are located at elevations which do not permit gravity flow of condensate to the boiler.

These pumps will quickly lift condensate from extremely low to high return lines and will automatically lift overflow water from auxiliary apparatus to storage tanks.

In many cases, installation of a Dunham-Bush Condensate pump has accounted for impressive fuel savings by returning hot condensate to the boiler instead of wasting it to the sewer, thus reducing the amount of makeup water required and minimizing difficulties from boiler encrustation.

Manual or magnetic starters, with overload proctection,can be furnished on any pump mounted and wired or shipped loose at extra cost. Single pumps and Duplex pumps with 1½ HP motors and larger require magnetic starters. Smaller HP pumps are furnished as standard with motors wired to the float control, No wiring furnished with pumps requiring magnetic starters or smaller HP pumps employing manual or magnetic starters unless specified mounted and wired.

Par 2.2.1
g. Pumps.
Par 3.8.3

FEATURES

LONG LIFE - These pumps are designed so that scale and rust usually found in heating system returns, will not seriously affect the high efficiency and long life of the unit. A mechanical shaft seal rated at 250° is used in these pumps eliminating all stuffing box maintenance. Motors are mounted well above the floor level, affording increased protection from surface water and splash of floor cleaning operations.

SUPERIOR PERFORMANCE - The Dunham-Bush Condensate Pumps' operation is automatic, quiet, efficient and reliable. They have the ability to handle condensate at high temperatures and loads several times normal, assuring dependable operation under all conditions likely to be encountered on a job. The duplex unit is designed to provide automatic standby service and alternation.

The tank is constructed with an interior baffle to insure streamline water flow which results in a lower Net Positive Suction Head Required.

EASY INSTALLATION – These pumps are ready for operation after piping and wiring connections are made.

DUNHAM-BUSH RESERVES THE RIGHT TO MAKE CHANGES IN SPECIFICATIONS AND DESIGN WITHOUT NOTICE.

CONSTRUCTION

The bronze fitted centrifugal pump with its dynamically balanced enclosed impeller is assembled as a unit on the end bracket of the electric motor. The pump case is volute design. A mechanical shaft seal rated at 250° is used in these pumps eliminating all stuffing box maintenance.

Motors are provided with deep groove ball bearings. These pumps are available for operation on single phase or three phase 60 Hertz alternating current. The motor speeds are 3500 ~~and 1750~~ RPM. Single phase motors have built-in overload protection.

The tank, of welded construction, is made of heavy gauge steel, with flanges on two sides for securely bolting the pump to the foundation. The tank on the single pump is equipped with a float switch and an opening with blank flange so that a second centrifugal pump can be added at a later date.

The Duplex pump employs as standard equipment a mechanical alternator which provides automatic standby service. If one pump is inoperative, the second pump starts automatically as well as alternation on each cycle of float control. Starting equipment, if desired, can be furnished as an optional extra.

OPERATION

Condensate from the system flows by gravity into the pump tank. When the water reaches sufficient height, the float mechanism closes the float switch contacts and operates the motor. The pump discharges the water to the boiler and lowers the level in the tank. The pump stops when the water in the tank reaches its low level where the float mechanism opens the float switch contacts.

SELECTION

The capacity tables are arranged for easy selection of the proper unit for the EDR (equivalent direct radiation) load and discharge pressure. If the boiler is at a higher level, or located some distance from the pump, care should be exercised to select a pump with sufficient discharge pressure to more than equal (1) the maximum boiler pressure, plus (2) the difference in elevation reduced to pounds (2.31 feet equals 1 pound) plus (3) the friction in the discharge piping expressed in pounds. Frequently, the use of a larger discharge line will reduce the friction head sufficiently to permit the selection of a pump having a lower discharge pressure.

~~BOILER FEED PUMPS~~

(WITH MAKE-UP WATER VALVE)

The type AW-CRV Boiler Feed Pump is designed for those installations where it is important to manitain the boiler water line within narrow limits, and to automatically supply "make-up" water from an outside source. Precise boiler line control is accomplished by governing the pump operation with a Boiler Water Line Controller installed at the boiler water line. When the boiler requires water, the float operated switch in the Controller starts the pump motor(s) thru magnetic starters that can be furnished as an optional extra. Water level is maintained in the pump receiver by an electric solenoid water make-up valve activated by a reverse acting float switch. The construction of these pumps is similar to the CRV except that a make-up water valve is furnished in place of the float switch. Alternator is not furnished on the Duplex pump.

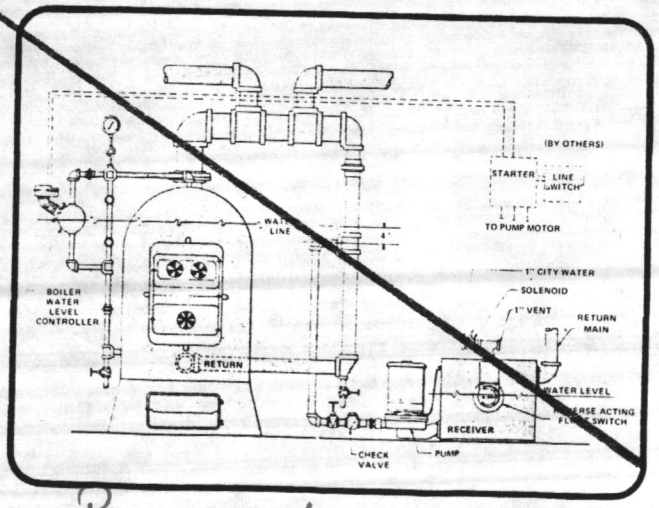

Par. 2.2.1 g. Pumps
Par. 3.8.3

CAPACITY DATA
(1750 RPM ONLY) CRV-1

Catalog Numbers and Motor Horsepower						Inlet Tapping In Inches	Capac. 1000 Sq. Ft. EDR	GPM Radiation Will Condense	GPM Pump Capacity	Receiver Size In Inches		Receiver Capacity In Gallons
10 Lb.	H.P.	15 Lb.	H.P.	20 Lb.	H.P.					Height	Length	
210	1/4	215	1/4	220	1/3	3	2	1	3	15	21	16
410	1/4	415	1/3	420	1/2	3	4	2	6	15	21	16
610	1/4	615	1/3	620	1/2	3	6	3	9	15	21	16
		815	1/3	820	1/2	4	8	4	12	18	24	24
		1015	1/2	1020	1/2	4	10	5	15	18	24	24
		1515	3/4	1520	3/4	4	15	7 1/2	22 1/2	18	21	33
		2015	3/4	2020	1	4	20	10	30	18	21	33
		2515	3/4	2520	1	4	25	12 1/2	37 1/2	18	21	33
				3020	1	4	30	15	45	18	21	33
				4020	2	4	40	20	60	18	24	44
				5020	2	4	50	25	75	18	24	44
30 Lb.	H.P.	40 Lb.	H.P.									
230	1	240	1 1/2			3	2	1	3	15	21	16
430	1	440	1 1/2			3	4	2	6	15	21	16
630	1	640	1 1/2			3	6	3	9	15	21	16
830	1	840	1 1/2			4	8	4	12	18	21	24
1030	1	1040	1 1/2			4	10	5	10	18	21	24
1530	1½	1540	2			4	15	7 1/2	22 1/2	18	21	33
2030	1½	2040	2			4	20	10	30	18	21	33
2530	2	2540	2			4	25	12 1/2	37 1/2	18	21	33
3030	1½					4	30	15	45	18	21	33
4030	2					4	40	20	60	18	24	44

RATED FOR CONTINUOUS SERVICE FOR CONDENSATE UP TO 200° F

S.L.

CAPACITY DATA
(3500 RPM ONLY) CRV - 2

Catalog Numbers and Motor Horsepower						Inlet Tapping In Inches	Capac. 1000 Sq. Ft. EDR	GPM Radiation Will Condense	GPM Pump Capacity	Receiver Size In Inches		Receiver Capacity In Gallons
10 Lb.	H.P.	15 Lb.	H.P.	20 Lb.	H.P.					Height	Length	
210	1/3	215	1/3	220	1/3	3	2	1	3	12 1/2	18	16
410	1/3	415	1/3	420	1/3	3	4	2	6	12 1/2	18	16
610	1/3	615	1/3	620	1/3	3	6	3	9	12 1/2	18	16
		815	1/3	820	1/3	4	8	4	12	13 1/2	21	24
		1015	1/3	1020	1/3	4	10	5	15	13 1/2	21	24
		1515	1/3	1520	1/2	4	15	7 1/2	22 1/2	13 1/2	24	33
		2015	1/2	2020	1/2	4	20	10	30	13 1/2	24	33
		2515	1/2	2520	1/2	4	25	12 1/2	37 1/2	13 1/2	24	33
				3020	1/2	4	30	15	45	18	21	34
				4020	1 1/2	4	40	20	60	18	24	44
				5020	2	4	50	25	75	18	24	44
30 Lb.	H.P.	40 Lb.	H.P.									
230	1/3	240	3/4			3	2	1	3	12 1/2	18	16
430	1/3	440	3/4			3	4	2	6	12 1/2	18	16
630	1/2	640	1			3	6	3	9	12 1/2	18	16
830	1/2	840	1			4	8	4	12	13 1/2	21	24
1030	1/2	1040	1			4	10	5	10	13 1/2	21	24
1530	3/4	1540	1 1/2			4	15	7 1/2	22 1/2	13 1/2	24	33
2030	3/4	2040	1 1/2			4	20	10	30	13 1/2	24	33
2530	1 1/2	2540	3			4	25	12 1/2	37 1/2	13 1/2	24	33
3030	1 1/2					4	30	15	45	13 1/2	24	33
		3040	3			4	30	15	45	18	21	34
4030	2	4040	3			4	40	20	60	18	24	44
5030	3	5040	3			4	50	25	75	18	24	44
50 Lb.	H.P.	60 Lb.	H.P.	70 Lb.	H.P.							
250	1 1/2	260	1 1/2	270	2	3	2	1	3	15	21	16
450	1 1/2	460	1 1/2	470	2	3	4	2	6	15	21	16
650	1 1/2	660	2	670	2	3	6	3	9	15	21	16
850	1 1/2	860	2	870	2	4	8	4	12	18	24	24
1050	1 1/2	1060	2	1070	3	4	10	5	15	18	24	24
1550	2	1560	3	1570	3	4	15	7 1/2	22 1/2	18	21	33
2050	2	2060	3	2070	3	4	20	10	30	18	21	33
2550	3	2560	3	2570	3	4	25	12 1/2	37 1/2	18	24	44
3050	3	3060	5	3070	5	4	30	15	45	18	21	33
4050	5	4060	5	4070	5	4	40	20	60	18	24	44
5050	5	5060	5			4	50	25	75	18	24	44

P-4

Par 2.2.1 g. Pumps Par 3.P.3

DIMENSIONAL DATA
(3500 RPM ONLY) CRV - 2

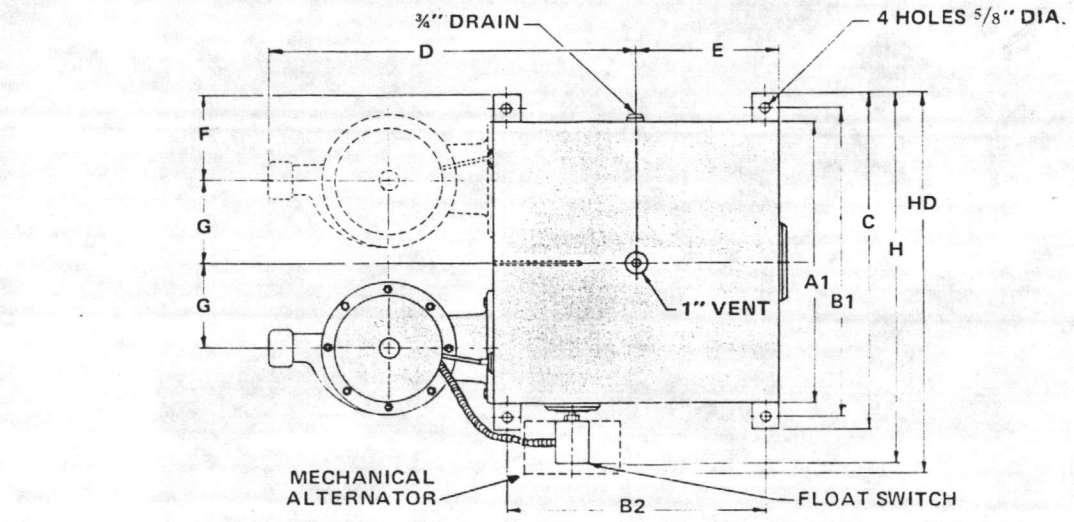

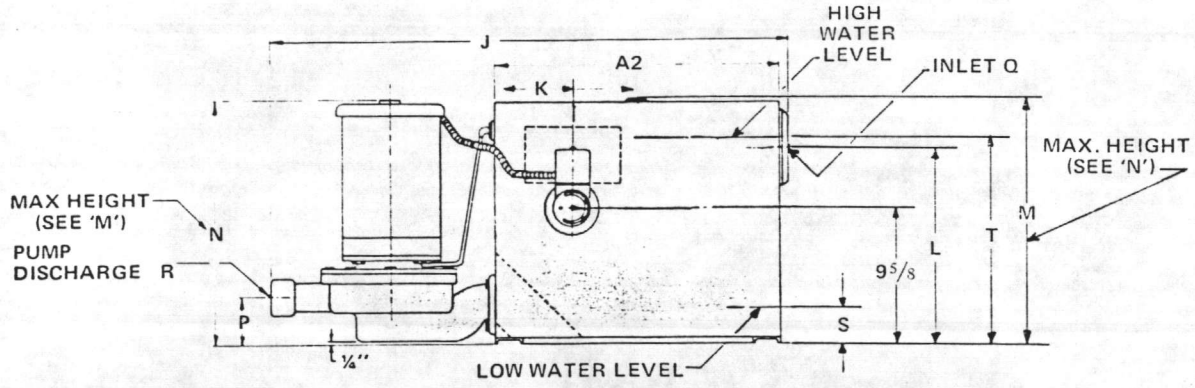

DIMENSIONAL CHART - CRV CONDENSATE PUMP - 3500 RPM

PUMP MODEL	A1	A2	B1	B2	C	D	E	F	G	H	HD	J	K	L	M	N	P	Q	R	S	T
250, 260, 270 450, 460, 470 650, 660, 670	21	12½	23	10½	25	22½	6¼	6¼	6¼	29 9/16	29 11/16	29 25/32	2 3/4	11 7/8	15½	18 9/16	3 7/8	3	1	4	13
850, 860, 870 1050, 1060, 1070	24	12½	26	10½	28	22½	6¼	7	7	32 9/16	32 11/16	29 25/32	3 1/8	14 5/8	18½	21½	3 7/8	4	1	4	13
1550, 1560, 1570 2050, 2060, 2070 [illegible], 2560 2570	21	21	23	19	25	26¾	10½	6¼	6¼	29 9/16	29 11/16	38 9/32	10 1/2	15	18½	21½	3 7/8	4	1	4	13
3040, 3050, 3060 3070	21	21	23	19	25	26¾	10½	6¼	6¼	29 9/16	29 11/16	38 9/32	10 1/2	15	18½	21 11/16	4 1/16	4	1¼	4	13
4020, 4030, 4040 4050, 4060, 4070 5020, 5030, 5040 5050, 5060	24	24	26	22	28	28¼	12	7	7	32 9/16	32 11/16	41 9/32	12	15	18½	21 11/16	4 1/16	4	1¼	4	13

P-4

Par. 2.2.1
g. Pumps
Par 3.8.3

Morgan Sales & Associates

2702 GREENBAY ROAD • FAYETTEVILLE, NORTH CAROLINA 28303
TELEPHONE: (919) 484-5796

PROJECT----------UNACCOMPANIED ENLISTED PERSONNEL HOUSING (UPEH)

LOCATION----------MARINE CORPS BASE CAMP LEJEUNE, NORTH CAROLINA

MECHANICAL CONTRACTOR----------RAMSEY AIR CONDITIONING

ENGINEER----------DEWEY R. WINCHESTER

MANUFACTURER----------ARMSTRONG PUMPS, INC.

1 - Lot Armstrong Pump products, consisting of pumps, airtrol system, heat exchanger, and Watts backflow preventer and pressure reducing valve.

All items submitted under Sections, Pages, and Paragraphs, as indicated on individual specification sheets.

Po 2.2.1
g. Pumps
Par. 3.8
3.8.1

BOX 33442
RALEIGH, N. C. 27606
(919) 851-0603

P. O. BOX 29146
GREENSBORO, N. C. 27408
(919) 643-6156

143 PINECREST PKWY.
WILMINGTON, N. C. 28401
(919) 343-1257

ARMSTRONG CENTRIFUGAL PUMPS
BASE MOUNTED

P1, P2

File No.:	5040.9
Date:	June 1. 198
Supersedes:	5040.9
Date:	Jan. 31. 196

SERIES 4030 SUBMITTAL DATA

CUSTOMER	CUSTOMER'S ORDER NO.	ARMSTRONG REFERENCE
RAMSEY AIR COND	0521	—

ENGINEER	JOB REFERENCE
DEWEY R. WINCHESTER	UPEH, MCB CAMP LEJEUNE, N. C.

SPECIFICATION REFERENCE	NO. OF PUMPS	QUOTATION REFERENCE
SEC 15801, PAGE 10, PAR 3.8. + 3.8.1	2	—

PUMP DESIGN DATA

PUMP SIZE	4X3X8, 4X3X10	LIQUID	H_2O
CAPACITY U.S.G.P.M	458, 315	TEMP. °F	—
FEET HEAD	175, 90	SPECIFIC GRAVITY	—

MOTOR DESIGN DATA

H.P. RATING	40, 15	FRAME SIZE	286TS, 254T		
SPEED R.P.M.	3600, 1750	ENCLOSURE	ODP		
VOLTS	460	CYCLES	60	PHASE	3

PART NAME	CONSTRUCTION ALL-IRON ☐	BRONZE-FITTED ☑	☐
VOLUTE	CAST IRON	CAST IRON	
IMPELLER	CAST IRON	BRONZE	
COVERPLATE	CAST IRON	CAST IRON	
BEARING FRAME	CAST IRON	CAST IRON	
BEARINGS	BALL	BALL	
SHAFT	CARBON STEEL	CARBON STEEL	
SHAFT SLEEVE	ST. STL	ST. STL	
MECH. SEAL	STEEL-FITTED	BRASS-FITTED	
SEAL RING	CARBON	CARBON	
SEAT INSERT	NI RESIST	NI RESIST	
INSERT GASKET	RUBBER	RUBBER	
BASEPLATE	STEEL	STEEL	

SPECIAL FEATURES
- ☐ HIGH TEMPERATURE CONSTRUCTION
- ☑ CASE WEARING RINGS
- ☑ DRIP PAN
- ☐

SPECIFICATIONS

PUMP:

HORIZONTAL SHAFT, SINGLE STAGE, END SUCTION, RADIALLY SPLIT CASING WITH CENTERLINE DISCHARGE, CENTRIFUGAL TYPE WITH SINGLE MECHANICAL SEAL AND ANTI-FRICTION BEARINGS. DIRECTLY CONNECTED TO DRIVING MOTOR THROUGH A FLEXIBLE COUPLING. PUMP AND MOTOR MOUNTED ON A COMBINATION TYPE BASEPLATE.

MOTOR:

HORIZONTAL SHAFT, FOOT-MOUNTED, CONTINUOUSLY RATED, BALL BEARING, SQUIRREL-CAGE INDUCTION TYPE.

PREPARED BY: Tom Burton

DATE: 7-11-84

Form No.: 6205-A

REMARKS AND/OR ACCESSORIES

DIMENSIONS: SEE FILE NO. 5040.924 ATTACHED

PERFORMANCE: SEE FILE NO. 5040.33+.39 ATTACHED

Par. 2.2.1
g. Pumps
Par. 3.8
3.8.1

ARMSTRONG PUMPS INC.
NORTH TONAWANDA, N.Y. 14120

ARMSTRONG CENTRIFUGAL PUMPS
BASE MOUNTED

SECTIONAL ARRANGEMENT

SERIES 4030

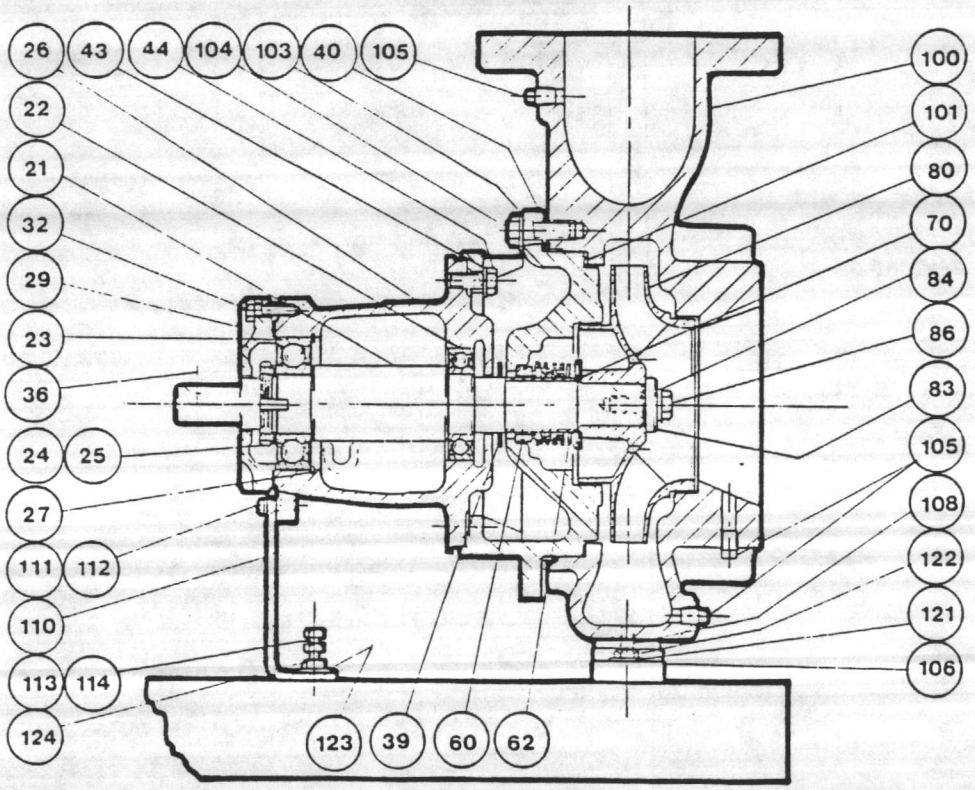

MATERIAL LEGEND

ASTM A 278-30
Cast Iron

ASTM B-61
Cast Bronze

ASTM A 276
Stainless Steel

AISI C-1144
Carbon Steel

ITEM No	DESCRIPTION	Material of construction	
		BRZ FTD	ALL IRON
21	Shaft	C-1144	C-1144
22	Bearing (Inboard)	STL	STL
23	Bearing (Outboard)	STL	STL
24	Lockwasher	STL	STL
25	Lock Nut	STL	STL
26	Bearing Housing	A-278-30	A-278-30
27	Snap Ring	STL	STL
29	Cap (Outboard)	A-278-30	A-278-30
32	Capscrew Hex. Hd.	STL	STL
36	Key Woodruff	Nickel Alloy	Nickel Alloy
39	Water Slinger	Neoprene	Neoprene
40	Adapter	A-278-30	A-278-30
43	Washer	STL	STL
44	Capscrew Hex. Hd.	STL	STL
60	Seat	Ni-Resist	Ni-Resist
62	Machanical Seal	BF-271	BF-271
70	Shaft Sleeve	A 276-304	A 276-304
80	Impeller	B-61	A 278-30
83	Washer Imp.	STL	STL

ITEM No	DESCRIPTION	Material of construction	
		BRZ FTD	ALL IRON
84	Lockwasher (When Req'd)	STL	STL
86	Capscrew Hex. Hd.	STL	STL
100	Casing	A-278-30	A-278-30
101	Gasket	Fiber	Fiber
103	Washer	STL	STL
104	Capscrew Hex. Hd.	STL	STL
105	Pipe Plug	C.I.	C.I.
106	Support Foot	A-36	A-36
108	Capscrew	STL	STL
110	Support Foot (Casing)	A-36	A-36
111	Washer	STL	STL
112	Capscrew Hex. Hd.	STL	STL
113	Nut Jam (When req'd)	STL	STL
114	Capscrew (When req'd)	STL	STL
121	Washer	STL	STL
122	Capscrew Hex. Hd.	STL	STL
123	Washer	STL	STL
124	Capscrew Hex. Hd.	STL	STL

For any pumping application requiring special features and/or special metallurgy please contact your Armstrong representative.

Armstrong PUMPS

ARMSTRONG CENTRIFUGAL PUMPS
BASE MOUNTED

FILE NO.: 5040.924
DATE: June 1 .1984
SUPERSEDES: 5040.922
DATE: Aug. 3 .1984

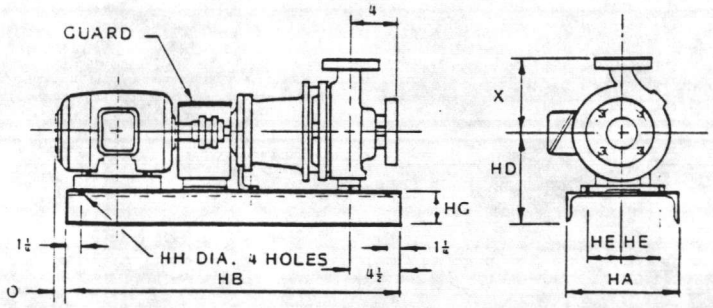

DIMENSIONAL DATA
SERIES 4030
WITH T-FRAME MOTOR
3 x 1½ x 10 through 8 x 6 x 13

All pumps are provided with flanged connections ANSI 125-lb. standard

*Pump provided with tapped holes on suction.
**Pump provided with tapped holes on discharge.

SUCT. x DISCH. x IMP. DIA.	MOTOR FRAME SIZE		DIMENSIONS IN INCHES							DIMENSION O			
										DRIP-PROOF		TEFC	
	(i)	(ii)	HA	HB	HD	HE	HG	HH	X	(i)	(ii)	(i)	(ii)
3 x 1½ x 10	143T	145T	12	30	10¼	4½	3	¾	8½	—	—	—	—
	182T	184T	12	30	10¼	4½	3	¾	8½	—	—	—	—
	213T	215T	12	33	10¼	4½	3	¾	8½	—	—	1	2½
	254T	256T	15	43	11¾	6	3½	¾	8½	—	—	—	—
	284TS	286TS	15	43	11¾	6	3½	¾	8½	—	—	—	1
	324TS	326TS	18	48	12¼	7½	4.	1	8½	—	—	—	—
3 x 2 x 10	143T	145T	12	30	11¼	4½	3	¾	9½	—	—	—	—
	182T	184T	12	30	11¼	4½	3	¾	9½	—	—	—	—
	213T	215T	12	33	11¼	4½	3	¾	9½	—	—	1	2½
	254T	256T	15	43	11¾	6	3½	¾	9½	—	—	—	—
	284TS	286TS	15	43	11¾	6	3½	¾	9½	—	—	—	1
	324TS	326TS	18	48	12¼	7½	4	1	9½	—	—	—	—
	364TS	365TS	18	48	13	7½	4	1	9½	—	—	3	4
P-2 → 4 x 3 x 10	182T	184T	12	30	11¼	4½	3	¾	11	—	—	—	—
	213T	215T	12	33	11¼	4½	3	¾	11	—	—	1	2½
	→ 254T	~~256T~~	15	40	11¾	6	3½	¾	11	—	—	—	—
	284TS	286TS	15	43	11¾	6	3½	¾	11	—	—	—	1
	324TS	326TS	18	48	12¼	7½	4	1	11	—	—	—	—
	364TS	365TS	18	48	13	7½	4	1	11	—	—	3	4
	404TS	—	22	48	14	9½	4	1	11	—	—	5½	—
6 x 4 x 10	213T	215T	12	33	13	4½	3	¾	12½	—	—	1	2½
	254T	—	15	40	13½	6	3½	¾	12½	—	—	—	—
	256T	—	15	43	13½	6	3½	¾	12½	—	—	—	—
	284TS	286TS	15	43	13½	6	3½	¾	12½	—	—	—	1
	324TS	326TS	18	48	14	7½	4	1	12½	—	—	—	—
	364TS	365TS	18	48	14	7½	4	1	12½	—	—	3	4
	404TS	—	22	48	14	9½	4	1	12½	—	—	5½	—

Par 2.2.1
g. Pumps — Par 3.8 — 3.8.1

ARMSTRONG BASE MOUNTED CENTRIFUGAL PUMPS
SERIES 4030

DIMENSIONAL DATA (continued)

SUCT. x DISCH. x IMP. DIA.	MOTOR FRAME SIZE		DIMENSIONS IN INCHES							DIMENSION O			
										DRIP-PROOF		TEFC	
	(i)	(ii)	HA	HB	HD	HE	HG	HH	X	(i)	(ii)	(i)	(ii)
3x2x8	56	—	12	30	10¼	4½	3	¾	9½	—	—	—	—
	143T	145T	12	30	10¼	4½	3	¾	9½	—	—	—	—
	182T	184T	12	30	10¼	4½	3	¾	9½	—	—	⅜	1⅜
	213T	215T	12	33	10¼	4½	3	¾	9½	—	—	1	2½
	254T	256T	15	40	11¾	6	3½	¾	9½	—	—	—	—
	284TS	286TS	15	43	11¾	6	3½	¾	9½	—	—	—	1
P-1 → 4x3x8	56	—	12	30	10¼	4½	3	¾	11	—	—	—	—
	143T	145T	12	30	10¼	4½	3	¾	11	—	—	—	—
	182T	184T	12	30	10¼	4½	3	¾	11	—	—	⅜	1⅜
	213T	215T	12	33	10¼	4½	3	¾	11	—	—	1	2½
	254T	256T	15	43	11¾	6	3½	¾	11	—	—	—	—
→	~~284TS~~	286TS	15	43	11¾	6	3½	¾	11	—	—	—	1
	324TS	326TS	18	48	12¼	7½	4	1	11	—	—	—	—
6x4x8	143T	145T	12	30	11¼	4½	3	¾	11	—	—	—	—
	182T	184T	12	30	11¼	4½	3	¾	11	—	—	⅜	1⅜
	213T	215T	12	33	11¼	4½	3	¾	11	—	—	1	2½
	254T	256T	15	43	11¾	6	3½	¾	11	—	—	—	—
	284TS	286TS	15	43	11¾	6	3½	¾	11	—	—	—	1
	324TS	326TS	18	48	12¼	7½	4	1	11	—	—	—	—
	364TS	—	18	48	12¼	7½	4	1	11	—	—	3	—
2x1x10	56	—	12	30	10¼	4½	3	¾	8½	—	—	—	—
	143T	145T	12	30	10¼	4½	3	¾	8½	—	—	—	—
	182T	184T	12	30	10¼	4½	3	¾	8½	—	—	⅜	1⅜
	213T	215T	12	33	10¼	4½	3	¾	8½	—	—	1	2½
	254T	256T	15	43	11¾	6	3½	¾	8½	—	—	—	—
	284TS	286TS	15	43	11¾	6	3½	¾	8½	—	—	—	1
	324TS	—	18	48	12¼	7½	4	1	8½	—	—	—	—

FOR EXACT INSTALLATION DATA, PLEASE WRITE FACTORY FOR CERTIFIED DIMENSIONS

MOTOR FRAME SIZES AND RATINGS

MOTOR HP	½	¾	1	1½	2	3	5	7½	10	15	20	25	30	40	50	60
1200 RPM	56	143T	145T	182T	184T	213T	215T	254T	256T	284T	286T	324T	326T	364T	365T	404T
P-2 → 1800 RPM	—	56	143T	145T	145T	182T	184T	213T	215T	254T	256T	284T	286T	324T	326T	364T
P-1 → 3600 RPM	—	—	—	143T	145T	145T	182T	184T	213T	215T	254T	256T	284TS	286TS	324TS	326TS

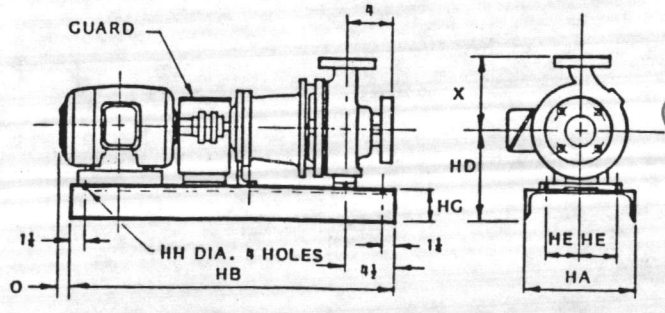

Par. 2.2.1
g. Pumps
Par. 3.8
3.8.1

Form No.: 6674

Armstrong PUMPS

ARMSTRONG
PERFORMANCE CURVES

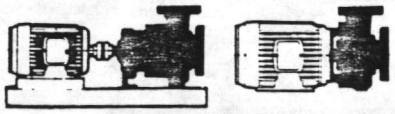

FILE NO.: 5040·33
DATE: JUNE 15, 1984
SUPERSEDES:
DATE:

P-1

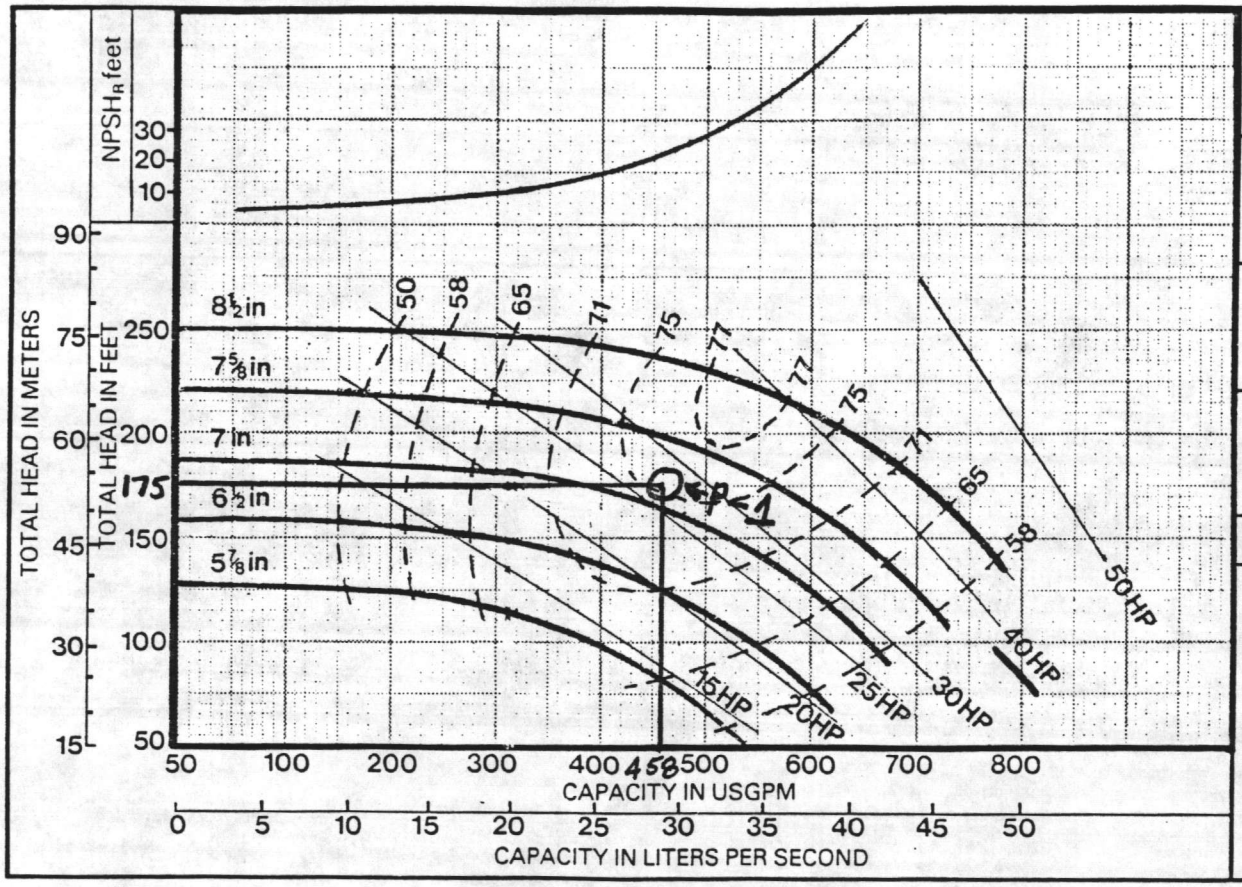

CURVE No.
6208-030

SERIES
4030
4280

SIZE
4×3×8
100 × 80 × 200

RPM
3600

AVAILABILITY
ALL RATINGS

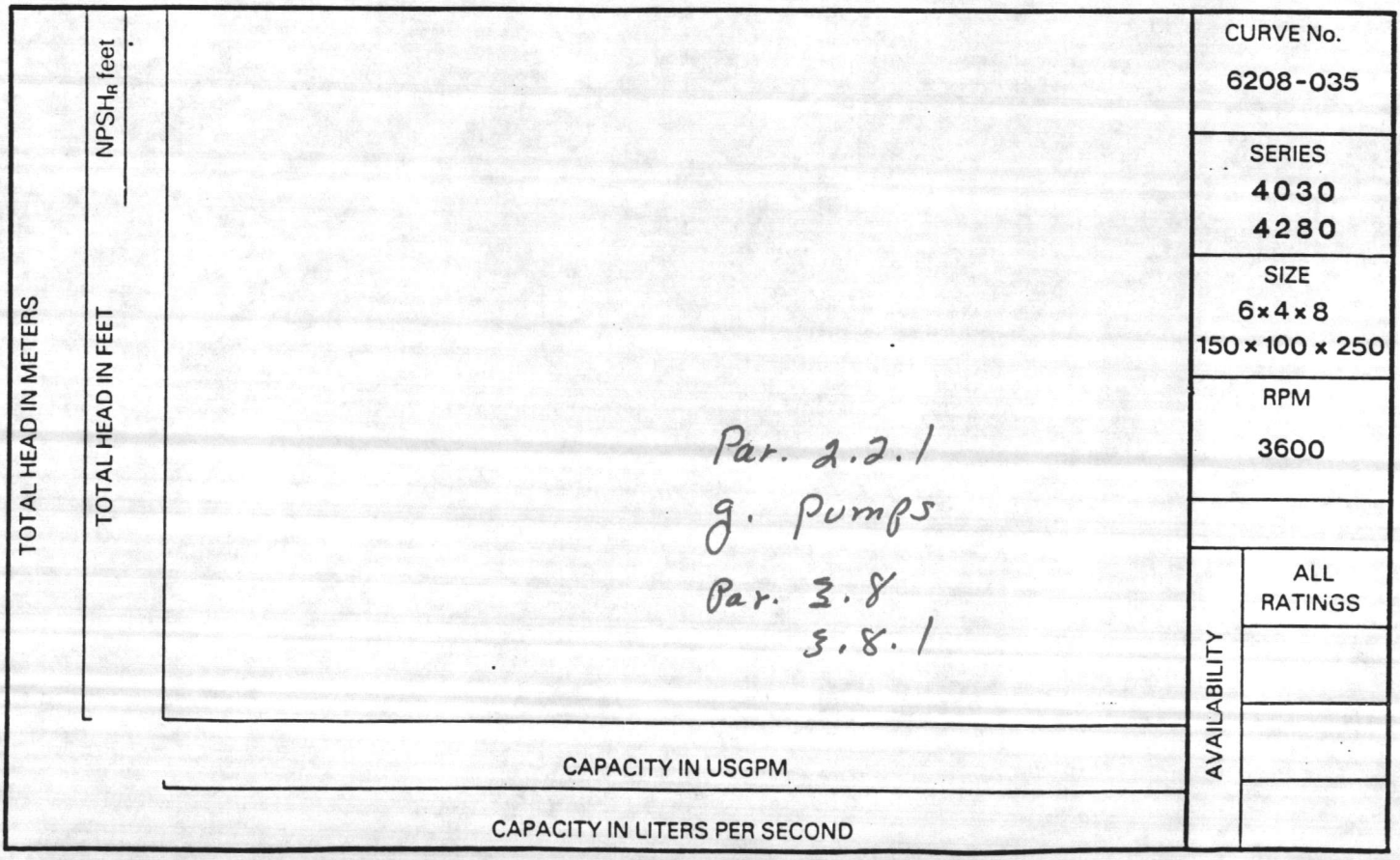

Par. 2.2.1
g. Pumps
Par. 3.8
3.8.1

CURVE No.
6208-035

SERIES
4030
4280

SIZE
6×4×8
150 × 100 × 250

RPM
3600

AVAILABILITY
ALL RATINGS

ARMSTRONG
PERFORMANCE CURVES

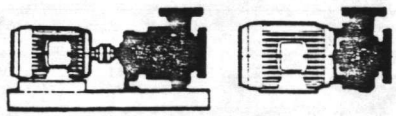

FILE NO.: 5040-39
DATE: JUNE 15, 1984
SUPERSEDES:
DATE:

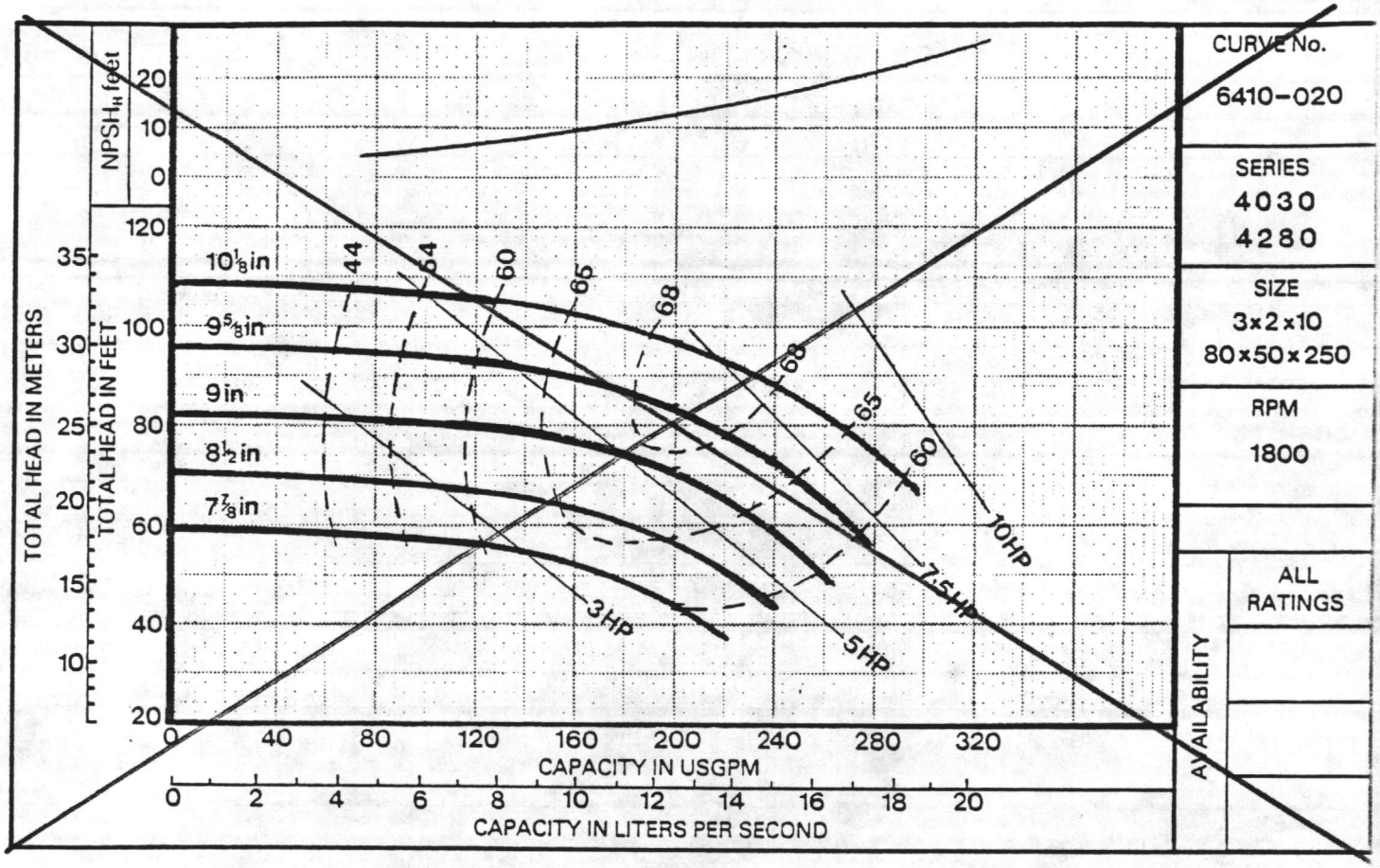

CURVE No.
6410-020

SERIES
4030
4280

SIZE
3x2x10
80x50x250

RPM
1800

AVAILABILITY
ALL RATINGS

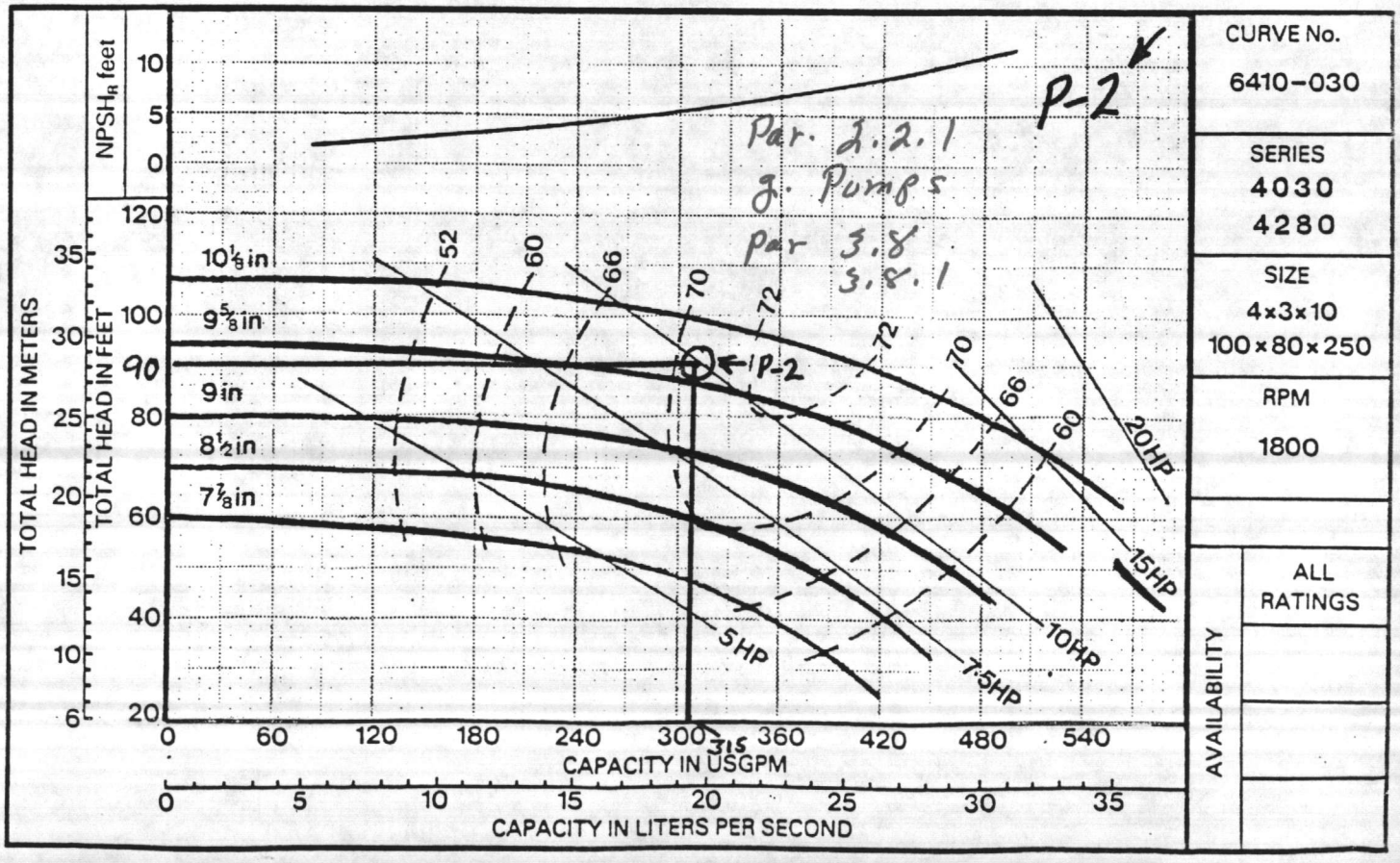

P-2

Par. 2.2.1
g. Pumps
Par 3.8
3.8.1

CURVE No.
6410-030

SERIES
4030
4280

SIZE
4x3x10
100x80x250

RPM
1800

AVAILABILITY
ALL RATINGS

ARMSTRONG

FILE NO.:	5035.10
DATE:	SEPT. 30, 1980
SUPERSEDES:	5035.10
DATE:	JUNE 1, 1979

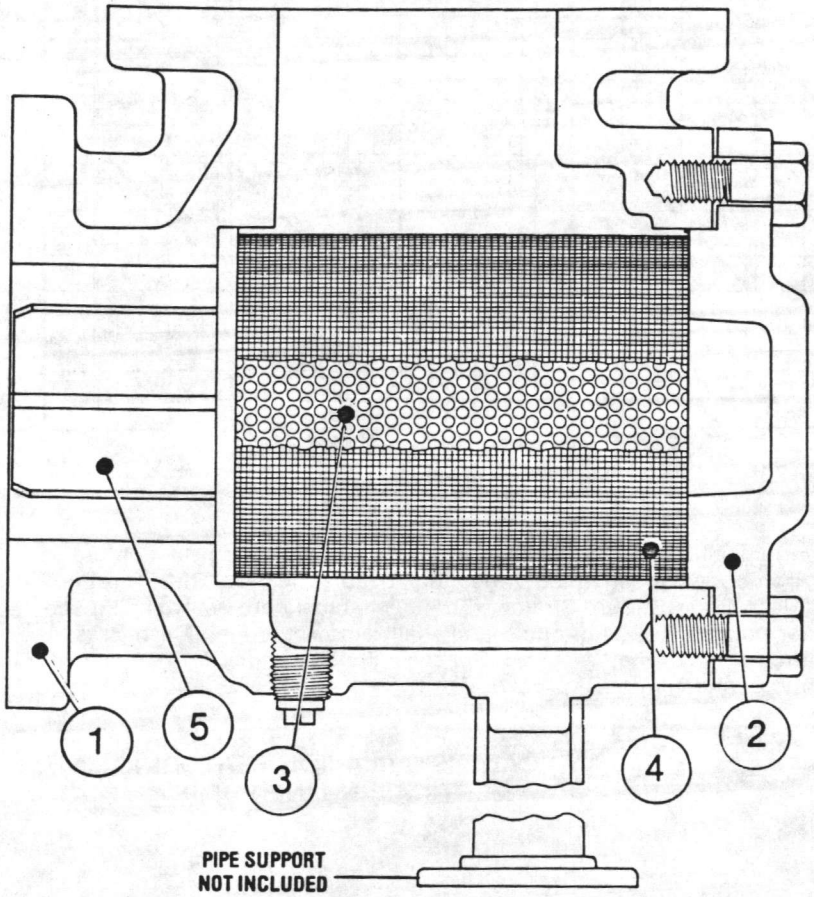

Suction Guides

ENGINEERED ECONOMY

An Armstrong Suction Guide mounted directly on a centrifugal pump, eliminates the following:

- **Long Radius Elbow**
- **Conventional 'Y' Strainer**
- **Two Flanges, Nuts, Bolts, Gaskets**
- **Suction Entrance Pipe**

Additional cost savings are realized by a substantial reduction in:

- **On-site pipe cutting and welding.**
- **Piping Layout time.**
- **On-site assembly time.**

2 - Armstrong Model SG-65 suction guides - we are suggesting the use of these in lieu of the Wye strainer, 90° elbow, and pipe reducer for pumps P-1 & P-2. THESE ARE ABOUT THE SAME COST, BUT WE FEEL THESE WOULD MAKE IT A BETTER JOB.

4	START-UP STRAINER	FINE MESH BRASS
5	GUIDE VANES (CLOSED SYSTEM)	(a) STEEL (b) CAST IRON
5 (ALT)	GUIDE VANES (OPEN SYSTEM)	(a) STAINLESS STEEL (b) CAST IRON

(a) MODELS WITH 8" PUMP SUCTION CONNECTION AND SMALLER.
(b) MODELS WITH 10" PUMP SUCTION CONNECTION AND LARGER. GUIDE VANES ARE CAST INTEGRAL WITH BODY.

"MAXIMUM WORKING PRESSURE 175 PSIG"

"MAXIMUM WORKING TEMPERATURE 300°F"

BENEFITS

- The Suction Guide provides optimum flow conditions at the pump inlet ensuring smooth trouble-free operation.
- Strainer design with 1/8" diameter holes provides maximum free flow area without jeopardizing the size of the Suction Guide or the pressure drop.
- Overall system pressure drop is reduced since less pipe and fittings are required for each pump installed.
- Fine mesh start-up strainer (furnished as standard) helps to prevent mechanical seal failures and instrumentation damage during the initial running period.
- A valuable saving in floor space results from elimination of the suction entrance pipe and long radius elbow.

Par. 2.2.1
g. Pump. (Accessory)
Par 3.8

ARMSTRONG Suction Guides

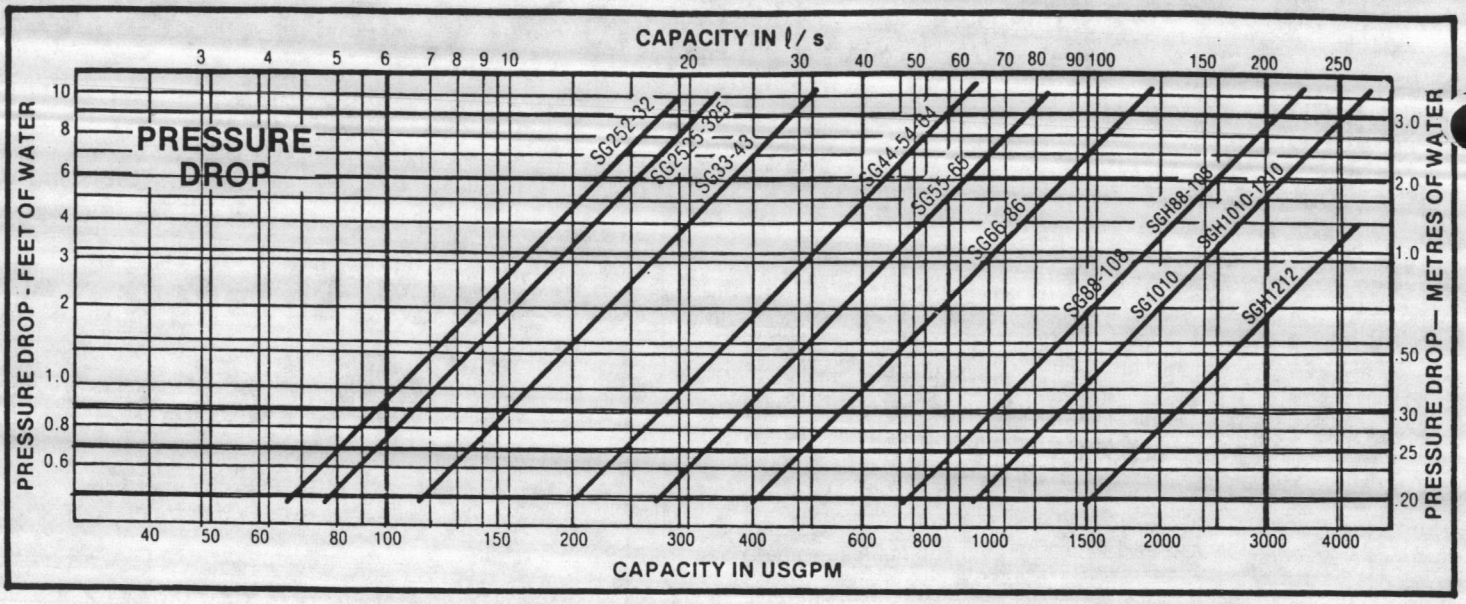

TYPICAL SPECIFICATION

Furnish and install on the suction of each pump an Armstrong Suction Guide with cast iron body, Outlet Guide Vanes, Removable Stainless Steel Strainer and Fine Mesh Brass Startup Strainer. The mechanical contractor shall inspect the Strainer prior to startup of pump and shall remove the Fine Mesh Brass Strainer after a short running period. Space shall be provided for removal of Strainer and connection of Blowdown Valve.

TYPICAL INSTALLATION FEATURING A HORIZONTAL END SUCTION PUMP

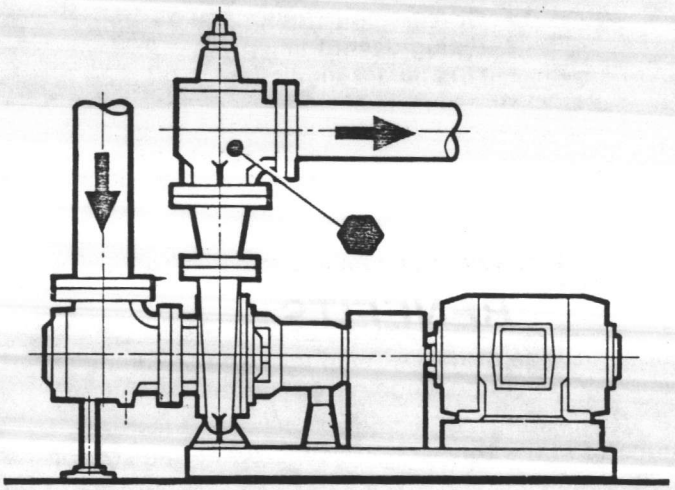

TYPICAL INSTALLATION FEATURING A VERTICAL IN-LINE PUMP.

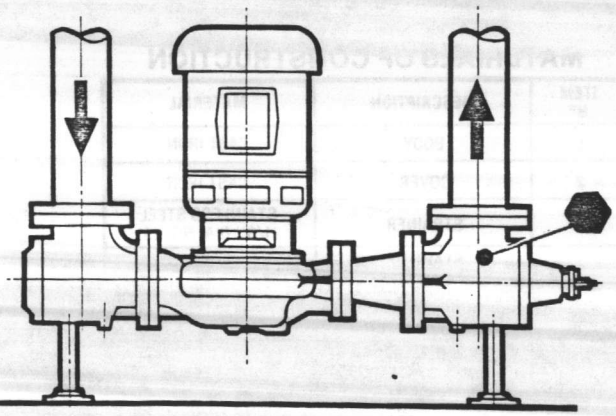

a related product...

ARMSTRONG Flo-Trex Control Valves

REFER TO FILE No. 5035.05

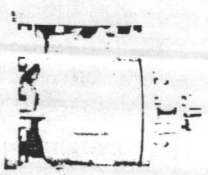

The Flotrex Valve is designed to take care of all the valving normally furnished on the discharge side of a centrifugal pump i.e. Check Valve, Balancing Valve and Tight Shut-Off Valve. For added economy, combine the Suction Guide with an Armstrong Flotrex Control Valve.

ARMSTRONG PUMPS INC.
93 East Avenue,
North Tonawanda, N.Y.,
U.S.A. 14120

S. A. ARMSTRONG LIMITED
1400 O'Connor Drive
Toronto, Ontario, Canada
M4B 2T9

ARMSTRONG PUMPS LIMITED
Peartree Road, Stanway,
Colchester, Essex, England
C03 5JX

FORM NO. 6591-A

ARMSTRONG CENTRIFUGAL PUMPS
SUBMITTAL DATA

FILE NO.: 5043.96
DATE: Sept. 30, 1975
SUPERSEDES: 5043.96
DATE: Apr. 16, 1973

SERIES 4380 P-3

CUSTOMER	CUSTOMER'S ORDER NO.	ARMSTRONG REFERENCE
RAMSEY AIR COND	0521	

ENGINEER	JOB REFERENCE
DEWEY R. WINCHESTER	UPEH, MCB CAMP LEJEUNE, N.C.

SPECIFICATION REFERENCE	NO. OF PUMPS	QUOTATION REFERENCE
SEC. 15801, PAGE 10, PAR. 3.8 & 3.8.2	1	—

PUMP DESIGN DATA

PUMP SIZE	1½ D	LIQUID	H_2O
CAPACITY U.S.G.P.M.	50	TEMP. °F	—
FEET HEAD	50	SPECIFIC GRAVITY	—

MOTOR DESIGN DATA

H.P. RATING	2	FRAME SIZE	145JM
SPEED R.P.M.	1750	ENCLOSURE	ODP
VOLTS 460	CYCLES 60	PHASE 3	

PART NAME	CONSTRUCTION		
	ALL-IRON ☐	BRONZE-FITTED ☐	ALL-BRONZE ☑
Volute	Cast Iron	Cast Iron	Bronze
Impeller	Cast Iron	Bronze	Bronze
Bracket	Cast Iron	Cast Iron	Bronze
Shaft Sleeve	Plated Steel	Bronze	Bronze
Mech. Seal	Steel Fitted	Brass Fitted	Brass Fitted
Seal Ring	Carbon	Carbon	Carbon
Seat Insert	Ceramic	Ceramic	Ceramic
Insert Gasket	Rubber	Rubber	Rubber
Wear Ring	Cast Iron	Bronze	Bronze

SPECIAL FEATURES ☐ ☐ ☐ ☐ —

SPECIFICATIONS

PUMP:
Vertical shaft, single stage, single suction, radially split casing, in-line mounting centrifugal type with single mechanical seal and lower case wear ring. Impeller mounted directly on motor shaft extension.

MOTOR:
Vertical, solid shaft, continuously rated, ball bearing, squirrel cage induction type with Nema "C" flange and extended shaft.

MAXIMUM WORKING PRESSURE - PUMP VOLUTE

CAST IRON	175 PSIG	☐
CAST IRON	250 PSIG	☐
CAST STEEL	300 PSIG	☐
SPECIAL _____		☐

REMARKS AND/OR ACCESSORIES

DIMENSIONS: SEE REVERSE SIDE

PERFORMANCE: SEE FILE NO. 5043.540 ATTACHED

PREPARED BY: Tom Burton

DATE: 7-11-84

Par. 2.2-1
2 Pumps
Par. 3.8
3.8.2

FORM NO. 6448-C
Litho in Canada

ARMSTRONG PUMPS INC.
NORTH TONAWANDA, N.Y. 14120

SERIES 4380

DIMENSIONAL DATA

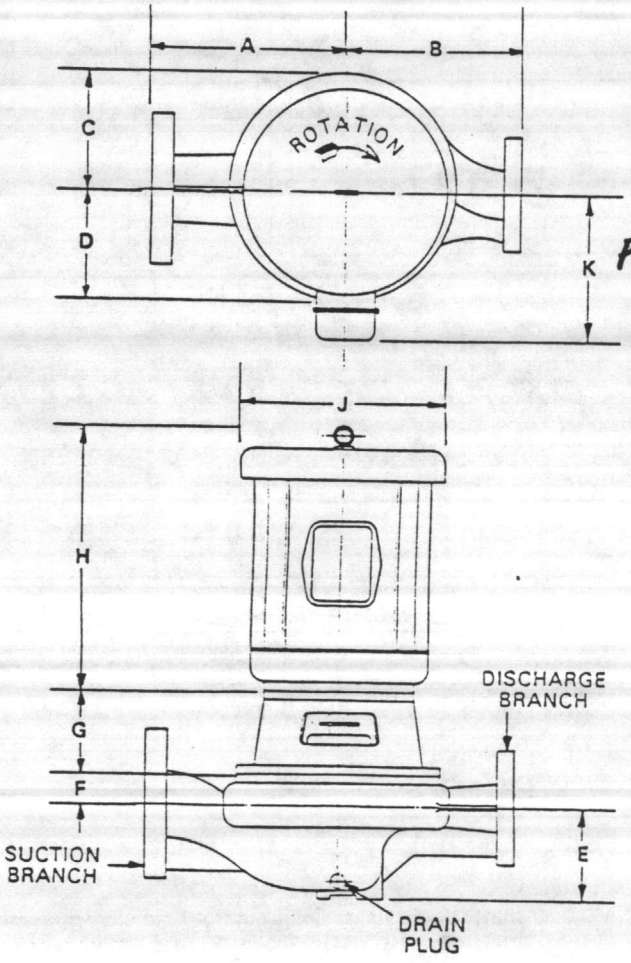

All dimensions are in inches. For exact installation data, please write factory for certified dimensions.

PUMP DIMENSIONS

PUMP SIZE	BRANCH SIZES		DIMENSIONS					
	Disch.	Suct.	A	B	C	D	E	F
1½D	1½	2	7	6½	4⅝	4⅜	3¾	1⅞
2D	2	2½	8	7	5	4⅝	4¼	1⅞
3D	3	4	10	9	6⅜	5	6½	1¾
4D	4	6	12	10	6½	5	6¾	2
1½E	1½	2	9½	9	6¼	5⅞	4⅛	1⅞
2E	2	3	11	10	6¾	6⅛	5½	1⅞
3E	3	4	12	11	7	6¼	6½	1⅞
4E	4	6	14	12	8⅝	6¾	8½	2

FLANGE DETAILS

BRANCH SIZE	125 LB. ASA CAST IRON 150 LB. ASA CAST STEEL				250 LB. ASA CAST IRON 300 LB. ASA CAST STEEL			
	Flange O.D.	Bolts No.	Bolts Size	B.C.D.	Flange O.D.	Bolts No.	Bolts Size	B.C.D.
1½	5	4	½	3⅞	6⅛	4	¾	4½
2	6	4	⅝	4¾	6½	8	⅝	5
2½	7	4	⅝	5½	7½	8	⅝	5⅞
3	7½	4	⅝	6	8¼	8	¾	6⅝
4	9	8	⅝	7½	10	8	¾	7⅞
6	11	8	¾	9½	12½	12	¾	10⅝

MOTOR DIMENSIONS (DRIP-PROOF AND T.E.F.C.)

MOTOR FRAME SIZE SERIES 4380	HP @ 1800 RPM	HP @ 3600 RPM	DRIP-PROOF				T.E.F.C.			
			G	H	J	K	G	H	J	K
143JM	1	1½	3⅜	9⅛	7	5¾	3⅜	10½	7¼	5⅞
145JM	1½	2	3⅜	10⅛	7	5¾	3⅜	11½	7¼	5⅞
145JM	2	~~3~~	3⅜	10⅛	7	5¾	~~3⅜~~	~~11½~~	~~7¼~~	~~5⅞~~
182JM	3	5	3⅜	10⅞	9	8⅛	3⅜	12⅝	9⅜	8⅛
184JM	5	7½	3⅜	11⅞	9	8⅛	3⅜	13⅝	9⅜	8⅛
213JM	7½	10	3⅜	13⅜	10⅝	8¾	3⅜	15¼	11⅛	9⅛
215JM	10	15	3⅜	13⅞	10⅝	8¾	3⅜	16¾	11⅛	9⅛
254TCZ	15	20	7⅛	18¾	12½	9¾	7⅛	20⅝	13⅛	10¾
256TCZ	20	25	7⅛	20½	12½	9¾	7⅛	22⅜	13⅛	10¾
284TCZ	25	30	7⅛	21	14	11¼	7⅛	23	15	12⅝
286TCZ	30	40	7⅛	22½	14	11¼	7⅛	24½	15	12⅝
324TCZ	40	50	7⅛	23	16	14	7⅛	25⅛	17	15⅛
326TCZ	50	60	7⅛	24½	16	14	7⅛	26⅝	17	15⅛

Litho in Canada

ARMSTRONG PERFORMANCE CURVES

SERIES 4300/80/~~85~~ 1750 RPM

FILE NO:	5043.540
DATE:	Feb. 28, 1973
SUPERSEDES:	NEW
DATE:	

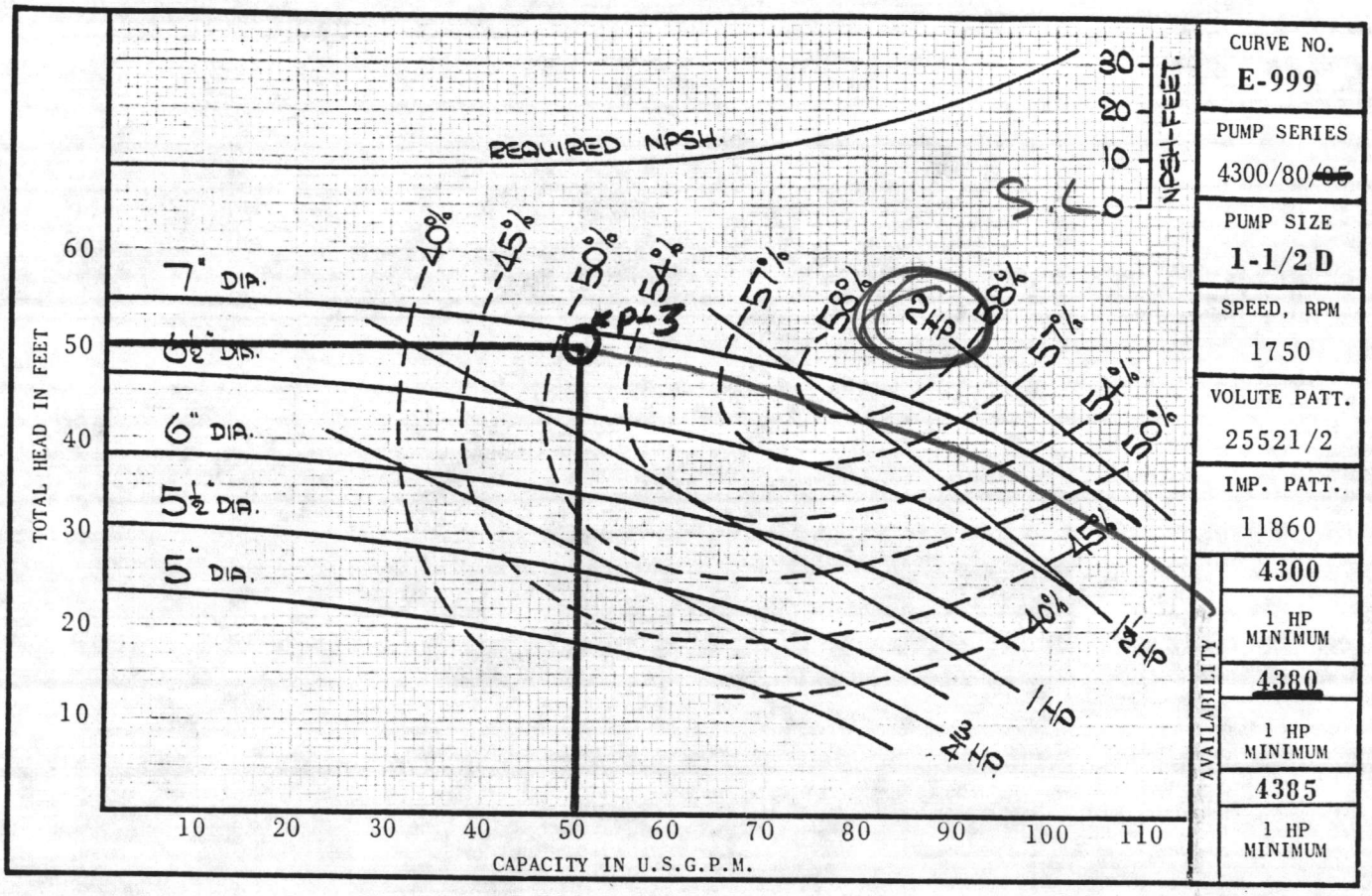

CURVE NO.	E-999
PUMP SERIES	4300/80/~~85~~
PUMP SIZE	1-1/2 D
SPEED, RPM	1750
VOLUTE PATT.	25521/2
IMP. PATT.	11860
AVAILABILITY	4300 — 1 HP MINIMUM
	4380 — 1 HP MINIMUM
	4385 — 1 HP MINIMUM

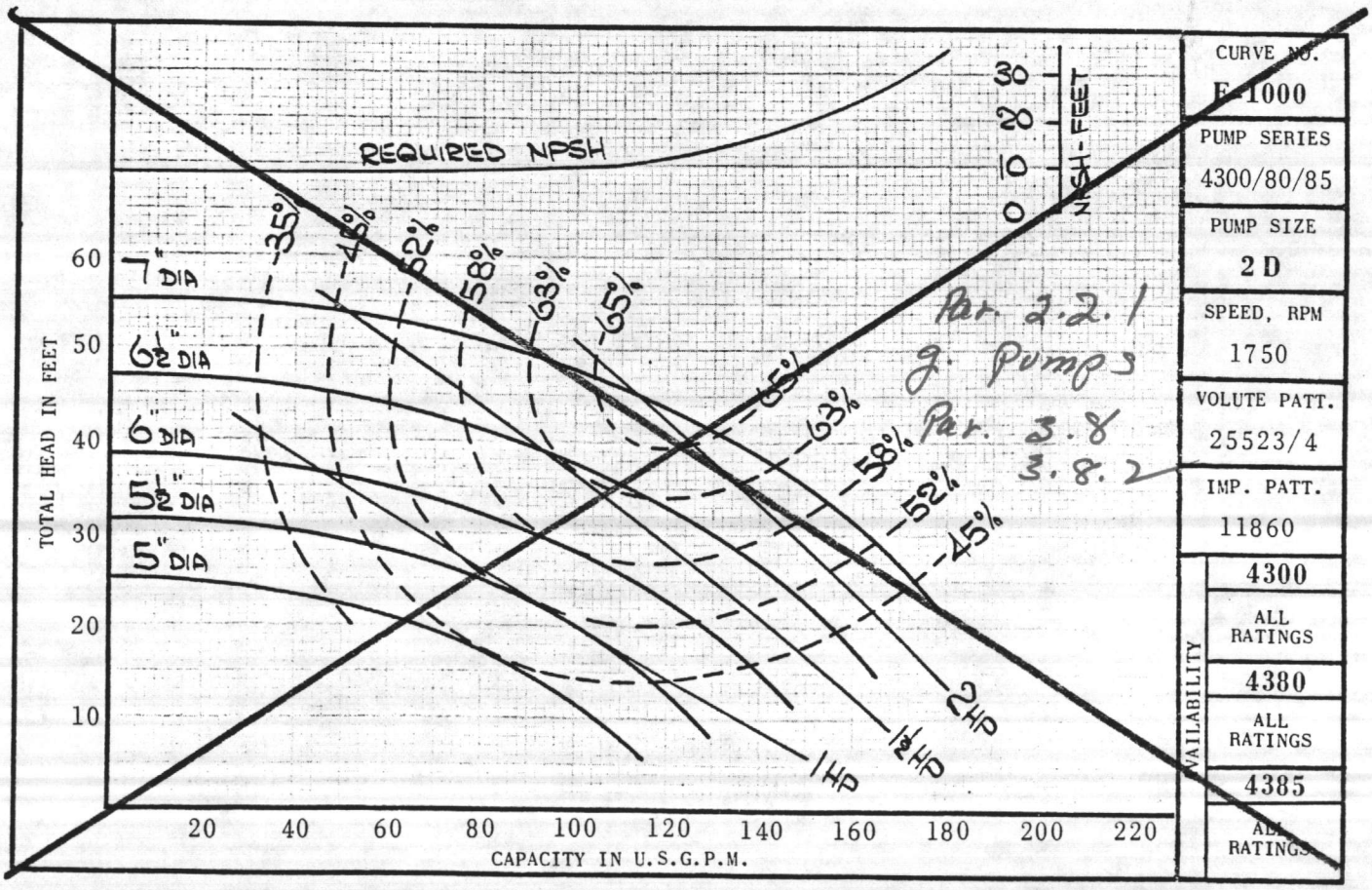

CURVE NO.	E-1000
PUMP SERIES	4300/80/85
PUMP SIZE	2 D
SPEED, RPM	1750
VOLUTE PATT.	25523/4
IMP. PATT.	11860
AVAILABILITY	4300 — ALL RATINGS
	4380 — ALL RATINGS
	4385 — ALL RATINGS

McQUAY GROUP McQUAY-PERFEX INC.
P.O. Box 1551, Minneapolis, Mn. 55440
CERTIFIED DRAWING

UNIT HEATERS
HORIZONTAL

FORM 113500 A
TYPE UHH

JOB: Unaccompanied Enlisted Personnel Housing
MCB, Camp Lejeune, NC

DATE 3-14-84 DR.
CH. APP.

G.O.

PURCHASER: Ramsey Air Conditioning, Inc.
Jacksonville, NC

PURCHASERS P.O. 0519 REP. P.O. 22-1115

REP Hoffman & Hoffman

CONS. ENG'R J. N. Pease. Assoc.
Charlotte, NC

ITEM OF ITEMS QTY.

12 PRINTS [X] FOR APPR'L. [ ] FOR RECORD

REVISIONS	No.	DATE	BY	WAS

STYLE I

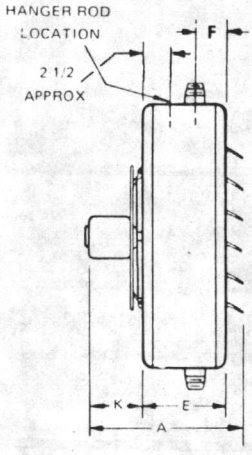

STYLE III

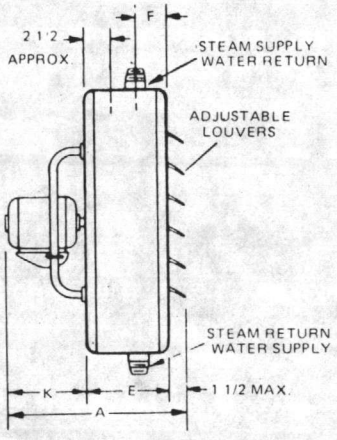

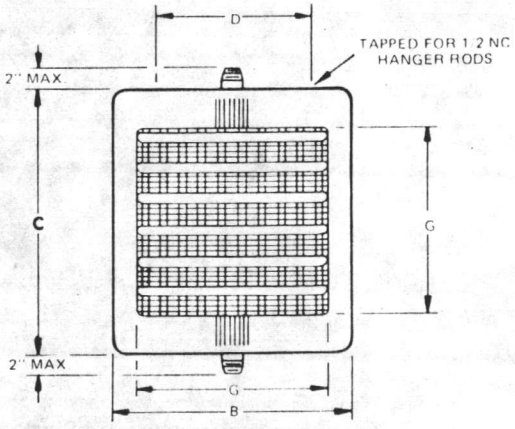

PHYSICAL DIMENSIONS

ITEM	MODEL NUMBER	MOUNT STYLE	A	B	C	D	E	F	G	K	STD. COIL CONN. SIZE M.I.P.S.	LOW FLOW WATER COIL CONN. SIZE
080	UHH-016B	I*	18.38	16.50	20.25	10.38	7.38	2.50	12.00	9.50	1 1/2"	1/2 O.D.
	UHH-022B	I*	18.38	16.50	20.25	7.38	7.38	2.50	12.00	9.50	1 1/2"	1/2 O.D.
	UHH-028B	I*	18.38	16.50	20.25	10.38	7.38	2.50	12.00	9.50	1 1/2"	1/2 O.D.
	UHH-034B	I*	19.00	16.50	20.25	10.38	7.38	2.50	12.00	10.12	1 1/2"	1/2 O.D.
	UHH-044B	I*	20.88	22.50	26.25	11.88	9.25	2.50	18.00	10.12	1 1/2"	5/8 O.D.
	UHH-052B	I*	20.88	22.50	26.25	11.88	9.25	2.50	18.00	10.12	1 1/2"	7/8 O.D.
	UHH-056B	III	27.25	22.50	26.25	16.38	9.25	2.50	18.00	16.50	1 1/2"	7/8 O.D.
	UHH-062B	III	27.25	25.50	26.25	16.38	9.25	2.50	18.00	16.50	1 1/2"	7/8 O.D.
	UHH-068B	III	27.25	25.50	29.25	19.38	9.25	2.50	21.00	16.50	1 1/2"	7/8 O.D.
	UHH-074B	III	27.25	28.50	32.25	22.38	9.25	2.50	24.00	16.50	1 1/2"	7/8 O.D.
	UHH-080B	III	28.19	28.50	32.25	22.38	9.25	2.50	24.00	17.44	1 1/2"	7/8 O.D.
	UHH-086B	III	28.94	37.50	41.25	31.38	10.00	3.25	33.00	17.44	2"	1 1/8 O.D.
	UHH-094B	III	27.38	37.50	41.25	31.38	10.00	3.25	33.00	15.88	2"	1 1/8 O.D.

*Units equipped with Explosion Proof motors have motor mount style III

CAPACITIES

ITEM	QTY	TAG	MOTOR DATA HP	MOTOR DATA RPM	MOTOR DATA VOLTS. CY. & PH	CFM @ 70° F	# STEAM 180 BTUH	# STEAM 180 EDR	ENT H2O 68 LBS OF COND HR	ENT H2O 68 FINAL AIR TEMP °F	ENT AIR GPM
080	15	UH # 1	1/20		120-60-1		4866				0.65

REV. 11-78

Par. 2.2.1
h. Unit Heater Par. 3.9

113500 A

SUBMITTAL DATA

ORDER NO. 22-1116R

DATE 4/27/84

JOB:	Unaccompanied Enlisted Personnel Housing Marine Corps Base Camp Lejeune, North Carolina
ARCHITECT/ ENGINEER:	J. N. Pease Associates Charlotte, North Carolina
CONTRACTOR:	Ramsey Air Conditioning, Inc. Jacksonville, North Carolina
MANUFACTURER:	Markel Products Company Buffalo, New York
PRODUCT:	Symbol: UH #2 Area Served: Lift Station Model No.: F2F5103 Capacity: BTU: 11,200 KW Rating: 3.3 Volts-Hz Phase: 208-60-3 Motor HP: 1/125 Accessory: Wall Mounting Bracket (A5105) Built-In Thermostat (DCS252)
SPECIFICATIONS:	05-82-2244 15801-10, 3.10

Par. 2.2.1
h. Unit Heater.
Par. 3.10

HOFFMAN & HOFFMAN, INC.

Greensboro, N. C. / Asheville, N. C. / Charlotte, N. C. / Raleigh, N. C. / Roanoke, Va. / Charleston, S. C. / Columbia, S. C. / Greenville, S. C.

SPECIFICATIONS TABLE 1

	SECTION I								SECTION II		
	ELECTRICAL DATA								MOTOR DATA		
CATALOG NUMBER	KW INPUT	BTUH INPUT	HEATER VOLTAGE	Ø	STD. CONTROL VOLTAGE	MAX. AMP RATING	MIN. CIRCUIT FUSE SIZE	SUPPLY WIRE #GAUGE 60°C	VOLTAGE	HP	RPM
+F1F5103	3.3	11.2	208	1	208	15.9	20A	12GA	208	1/125	1550
+HF1B5103	3.3./2.5	11.2/8.5	240/208	1	240/208	13.7/11.9	20A/15A	12GA/14GA	240/208	1/125	1550
+F2F5103	3.3.	11.2	208	1-3	208	15.9	20A	12GA	208	1/125	1550
+HF2B5103	3.3./2.5	11.2/8.5	240/208	1-3	240/208	13.7/11.9	20A/15A	12GA/14GA	240/208	1/125	1550
+G1G5103	3.3	11.2	277	1	277	11.9	15A	14GA	277	1/125	1550
P3P5103CA1	3.3	11.2	480	3	24	4.0	15A	14GA	480	1/125	1550
+F1F5105	5.0	17.1	208	1	208	24.1	35A	8GA	208	1/125	1550
+HF1B5105	5.0/3.7	17.1/12.8	240/208	1	240/208	20.9/18.1	30A/25A	10GA/10GA	240/208	1/125	1550
+F2F5105	5.0	17.1	208	1-3	208	24.1	35A	8GA	208	1/125	1550
+HF2B5105	5.0/3.7	17.1/12.8	240/208	1-3	240/208	20.9/18.1	30A/25A	10GA/10GA	240/208	1/125	1550
+G1G5105	5.0	17.1	277	1	277	18.1	25A	10GA	277	1/125	1550
P3P5105CA1	5.0	17.1	480	3	24	6.1	15A	14GA	480	1/125	1550
F2F5107CA1	7.5	25.6	208	1-3	24	36.1	50A	6GA	208	1/50	1550
HF2B5107CA1	7.5/5.6	25.6/19.2	240/208	1-3	24	31.3/27.1	40A/35A	8GA/8GA	240/208	1/50	1550
G1G5107CA1	7.5	25.6	277	1	24	27.1	35A	8GA	277	1/50	1550
P3P5107CA1	7.5	25.6	480	3	24	9.1	15A	14GA	480	1/50	1550
F2F5110CA1	9.9	33.8	208	1-3	24	47.8	60A	4GA	208	1/50	1550
HF2B5110CA1	10.0/7.5	34.1/25.6	240/208	1-3	24	42.2/36.1	60A/50A	4GA/6GA	240/208	1/50	1550
G1G5110CA1	10.0	34.1	277	1	24	36.1	50A	6GA	277	1/50	1550
P3P5110CA1	10.0	34.1	480	3	24	12.1	20A	12GA	480	1/50	1550
F3F5115CA1	15.0	51.2	208	3	24	41.7	60A	4GA	208	1/20	1550
HF3B5115CA1	15.0/11.2	51.2/38.4	240/208	3	24	36.1/31.3	50A/40A	6GA/6GA	240/208	1/20	1550
P3P5115CA1	15.0	51.2	480	3	24	18.7	25A	10GA	480	1/20	1550
HF3B5120CA1	19.7/14.8	67.2/50.5	240/208	3	24	47.8/41.1	70A/60A	4GA/4GA	240/208	1/20	1550
P3P5120CA1	20.0	68.3	480	3	24	24.1	35A	8GA	480	1/20	1550
F3F5125CA1	25.0	85.3	208	3	24	69.5	90A	2GA	208	1/12	1550
HF3B5125CA1	25.0/18.7	85.3/64.0	240/208	3	24	60.2/52.1	80A/70A	3GA/4GA	240/208	1/12	1550
P3P5125CA1	25.0	85.3	480	3	24	30.1	40A	8GA	480	1/15	1550
F3F5130CA1	30.0	102.4	208	3	24	83.4	110A	1GA	208	1/12	1550
HF3B5130CA1	30.0/22.5	102.4/76.8	240/208	3	24	72.3/62.5	100A/80A	1GA/3GA	240/208	1/12	1550
P3P5130CA1	30.0	102.4	480	3	24	36.2	50A	6GA	480	1/15	1550
F3F5140CA1	40.0	136.5	208	3	24	111.2	150A	1/0*	208	1/4	1550
HF3B5140CA1	40.0/30.0	136.5/102.4	240/208	3	24	96.4/83.4	125A/110A	1/0/1GA*	240/208	1/4	1550
P3P5140CA1	39.0	133.1	480	3	24	47.0	70A	4GA*	480	1/5	1550
F3F5150CA1	49.6	169.3	208	3	24	139.0	175A	2/0*	208	1/4	1550
HF3B5150CA1	50.0/37.5	170.6/128.0	240/208	3	24	120.5/104.3	175A/175A	2/0 / 2/0*	240/208	1/4	1550
P3P5150CA1	50.0	170.6	480	3	24	60.3	80A	3GA*	480	1/5	1550

Par. 2.2.1
h. Unit Heater.
Par. 2.10

+ 208 volt available [illegible] factory for delivery. Control voltage [illegible] plug-in relay controls.

- These models are wired for direct line [illegible] connections. If line voltage connections are desired, [illegible] low voltage control transformer.

* Supply wire on these models should have a [illegible] 75°C minimum.

** The table is an alpha key to control table. (See tables 2 and 3).

SECTION II

AIR DELIVERED AT						RECOMMENDED PROTECTION								
Inlet	Outlet	Angle	Throw	Drop Horizontal	Drop Vertical	1P		2P		3P		4P		
400	1030	26°	12′	9′	9′	A	—	D	DD	J	KK	—	I	II
400	1030	26°	12′	9′	9′	A	—	D	DD	J	KK	—	I	II
400	1030	26°	12′	9′	9′	A	AA	D	DD	J	KK	—	I	II
400	1030	26°	12′	9′	9′	A	AA	D	DD	J	KK	—	I	II
400	1030	26°	12′	9′	9′	A	—	D	DD	J	KK	—	—	II
400	1030	26°	12′	9′	9′	—	AA	D	FF	K	LL	M	H	—
400	1030	40°	12′	9′	9′	A	—	D	DD	J	KK	—	I	II
400	1030	40°	12′	9′	9′	A	—	D	DD	J	KK	—	I	II
400	1030	40°	12′	9′	9′	A	AA	D	DD	J	KK	—	I	II
400	1030	40°	12′	9′	9′	A	AA	D	DD	J	KK	—	I	II
400	1030	40°	12′	9′	9′	A	—	D	DD	J	KK	—	—	II
400	1030	40°	12′	9′	9′	—	AA	D	FF	K	LL	M	H	—
700	1000	34°	22′	10′	12′	C	BB	D	FF	J	LL	M	I	II
700	1000	34°	22′	10′	12′	C	BB	D	FF	J	LL	M	I	II
700	1000	34°	22′	10′	12′	C	—	D	FF	J	LL	M	—	II
700	1000	34°	22′	10′	12′	—	AA	D	FF	K	LL	M	H	—
700	1000	45°	22′	10′	14′	C	BB	D	FF	J	LL	M	I	II
700	1000	45°	22′	10′	14′	C	BB	D	FF	J	LL	M	I	II
700	1000	45°	22′	10′	14′	C	—	D	FF	J	LL	M	—	II
700	1000	45°	22′	10′	14′	—	AA	D	FF	K	LL	M	H	—
1100	1580	43°	32′	11′	20′	—	CC	D	FF	J	LL	M	I	II
1100	1580	43°	32′	11′	20′	—	CC	D	FF	J	LL	M	I	II
1100	1580	43°	32′	11′	20′	—	AA	D	FF	K	LL	M	H	—
1100	1580	57°	32′	12′	18′	—	CC	D	FF	J	LL	M	I	II
1100	1580	57°	32′	12′	18′	—	BB	D	FF	K	LL	M	H	—
2000/1800	1300/1100	40/44°	45′	12′	22′	—	—	G	GG	J	LL	N	I	II
2000/1800	1300/1100	40/44°	45′	12′	22′	—	CC	G	GG	J	LL	N	I	II
2000/1800	1300/1100	40/44°	45′	12′	22′	—	BB	G	GG	K	LL	N	H	—
2000/1800	1300/1100	47/53°	40′	12′	20′	—	—	G	GG	J	LL	N	I	II
2000/1800	1300/1100	47/53°	40′	12′	20′	—	—	G	GG	J	LL	N	I	II
2000/1800	1300/1100	47/53°	40′	12′	20′	—	CC	G	GG	K	LL	N	H	—
3100/2800	2000/1800	40/45°	55′	15′	24′	—	—	G	GG	J	LL	N	I	II
3100/2800	2000/1800	40/45°	55′	15′	24′	—	—	G	GG	J	LL	N	I	II
3100/2800	2000/1800	40/45°	55′	15′	24′	—	CC	G	GG	K	LL	N	H	—
3100/2800	2000/1800	51/56°	50′	15′	22′	—	—	G	GG	J	LL	N	I	II
3100/2800	2000/1800	51/56°	50′	15′	22′	—	—	G	GG	J	LL	N	I	II
3100/2800	2000/1800	51/56°	50′	15′	22′	—	CC	G	GG	K	LL	N	H	—

How to Order:

1) Select Model No. desired.

2) Select the KW required and proper supply voltage from SECTION I of table 1. Eg. 10Kw 480 V 3 ø = P3PS110CA1

3) Select required control option(s) by referring to SECTION II. Locate Model Number Key Listing for respective heater(s). Insert code letters are to be cross referenced to control model numbers listed on table 2 of next page. Eg.

Ref. 2.2.1
Ref. Unit Heater
Ref. 3.10

4) Sample Order:

P3PS110CA1	HTR 10 Kw 480 V 3 ø
1-DC2-2S7	3 pole Disc. Sw.
1-A81T6	Wall Thermostat
1-AS1Z0	Wall/Ceiling Hanger Brkt.

DIFFUSER OPTIONS

Optional diffusers lend added air pattern versatility to individual vertical down blown installations as shown in illustrations.

Description	Used On	Model No.	Max Mtg Ht.	Dim A	Dim B	Diffuser Pattern	
1. Louver Diffuser (Standard) Louvers can be individually adjusted in either direction for rectangular coverage over doorways as an air curtain or to meet rectangular floor pattern heating requirements.	3.3 & 5.0 KW 7.5 & 10.0 KW 15.0 & 20.0 KW 25.0 & 30.0 KW 40.0 & 50.0 KW	STD. STD. STD. STD. STD.	9 12 18 22 24	20 40 52 75 84	10 22 30 42 47	A — B	
2. General Distribution (No Diffuser) Markel's Airchute Venturi permits general downflow air pattern distribution as required at a higher mounting height.	3.3 & 5.0 KW 7.5 & 10.0 KW 15.0 & 20.0 KW 25.0 & 30.0 KW 40.0 & 50.0 KW	N/R N/R N/R N/R N/R	9 12 18 22 24	15 30 40 55 64		A	
3. Anemostat Diffuser (Optional) For applications where draft restriction is required at lower unit mounting heights.	3.3 & 5.0 KW 7.5 & 10.0 KW 15.0 & 20.0 KW 25.0 & 30.0 KW 40.0 & 50.0 KW	N/A AD5120 AD5120 AD5150 AD5150	— 10 15 17 20	— 30 38 50 60		A	
4. Radial Diffuser (Optional) Individually adjustable fins permit increased floor coverage at 45° open. Additional throw is accomplished when fins are 90° vertical. Allow higher mounting height.	3.3 & 5.0 KW 7.5 & 10.0 KW 15.0 & 20.0 KW 25.0 & 30.0 KW 40.0 & 50.0 KW	N/A RD5120 RD5120 RD5150 RD5150	45° 90° — — 10 14 14 21 20 30 18 28	45° 90° — — 36 30 42 35 62 44 68 54		A	

STD = Standard N/R = None Required N/A = Not Applicable

DIMENSIONAL DATA

	H	W	D	SHIP Wt. Lbs.
3.3 and 5.0 KW	17 3/4	14 15/32	6 1/2	27
7.5 and 10.0 KW	24 5/16	21 1/2	6 1/2	50
15.0 and 20.0 KW	28 11/16	21 1/2	6 1/2	65
25.0 thru 50.0 KW	34	29 1/4	10 1/16	120

TABLE 3
MOUNTING BRACKETS and DUST SHIELD

Used On	Horizontal	Ship Wt. Lbs.	Vertical	Ship Wt. Lbs.	Dust Shield
3.3 KW to 5.0 KW	A5105	6	V5105		DS 5105
7.5 KW to 20.0 KW	A5120	9	V5120	13	DS 5120
25.0 KW to 50.0 KW	A5150	11	V5150	13	DS 5150

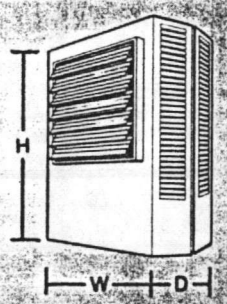

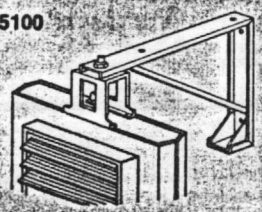

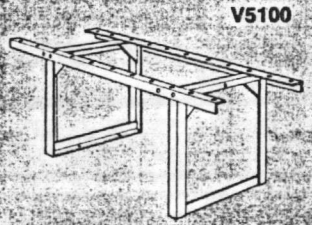

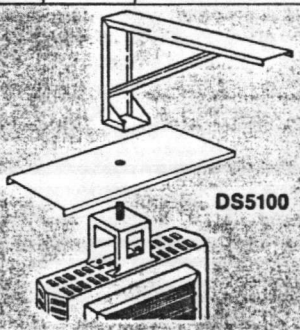

Installing the Taskmaster

DETERMINING HEATER REQUIREMENTS

Calculate the heating loads using the NEMA handbook or ASHRAE guide. Then determine the quantity and size of unit heaters to be used. To maintain uniform heat and reduce stratified air, it is recommended that the total CFM of the units turn the air over approximately 3 times per hour. In instances where a large group of people are located and normally in the same area, use a large number of lower Kw unit heaters. In warehouse areas or storage rooms where heat distribution and constant temperatures are less important, use fewer heaters of higher capacity.

HORIZONTAL MOUNT

Small rooms can be heated by one unit heater. Where two walls are exposed, heaters should be mounted as shown. In larger rooms, units should be located so their air streams wipe exposed walls without blowing at them. Units should be located so that the air stream of one supports that of another thus setting up a circulatory air movement. (Distance between units to be approximately 1½ times published air throw.) Units should not be mounted horizontally in areas having ceiling heights in excess of 15-18 ft.

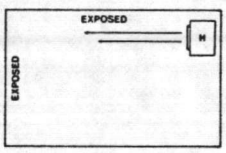

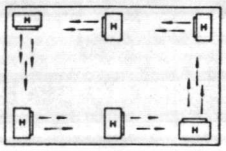

Per. 2.2.1
h. Unit Heater.
Per. 3.10

VERTICAL MOUNT

Units should be mounted vertically in high bay areas, or where heater location would not interfere with plant operation or traffic. Heaters should be situated to provide free air circulation. Size and selection of units should be based on recommended mounting height. Optional diffusers may best be employed to reduce high air velocity and at the same time disperse heated air in a uniform pattern. When unit heaters are used to combat cold air inrush from opened loading dock doors, one or more units should be arranged to blow warm air across opening.

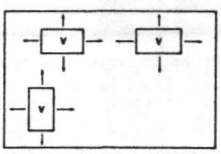

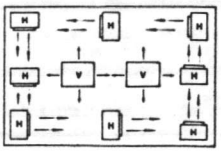

DUAL MOUNTING

Where square footage is large and comfort essential both horizontal and vertical installations may best serve your requirements.

Control Options Built-In

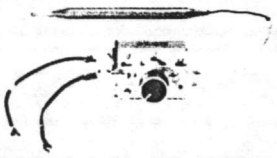

Built-In Thermostat
Single Pole, Double Pole or Two Stage Thermostats as required, 45°F-90°F Range. Models, T5100, T5102, T5122 respectively; Single pole line and low voltage stratification thermostat as required. 70°F-130°F Range. Models TC5102 and TC5103 respectively (See Table 2 for specifications)

Built-In Power Disconnect Switch
Two or Three Pole Power Disconnect Switch. 25 amp thru 63 amp AC resistive as required. (See Table 2 for specifications and model numbers).

Built-In Summer Fan Switch
Summer Fan Switch for independent fan operations as required. (See Table 2 for specifications and model numbers.)

TABLE 2 Control Accessory Options
(Field Installed)

BUILT-IN CODE LETTER	DESCRIPTION							MODEL NO.
POWER DISCONNECT SWITCH								
A	2 Pole	25 Amp	120-277 V.A.C. Res.					DCS252
AA	3 Pole	25 Amp	120-600 V.A.C. RES.					DCS253
BB	3 Pole	32 Amp	120-600 V.A.C. RES.					DCS323
C	2 Pole	63 Amp	120-600 V.A.C. RES.					DCS632
CC	3 Pole	63 Amp	120-600 V.A.C. RES.					DCS633
LINE VOLTAGE THERMOSTAT								
**D	SPST	Line Duty	25 Amp	120-277V	45°-90°F			T5100
E	DPST	Line Duty	25 Amp	120-277V	45°-90°F			T5102
LOW VOLTAGE THERMOSTAT (ALL CA1 MODELS)								
D	SPST	Low Volt/Pilot Duty	125VA	45°-90°F	(3.3 thru 20 Kw units)			T5100
G	2-Stage	Low Volt	125VA	45°-90°F	(25 thru 50 Kw units)			T5122
STRATIFICATION THERMOSTAT*								
H	SPST	Low Volt/Pilot Duty (w/Relay)	70°-130°F					TC5102
I	SPST	Line Duty	Amp	120-240V	70°-130°F			TC5103
SUMMER FAN SWITCH								
J	SPST	Line Volt	120-277V					FS5101
K	SPST	Line Volt	480-600V					FS5102

* Wall thermostat must be used when built-in stratification thermostat is required.
**Use DPST when three phase control is required.

WALL CODE LETTER	DESCRIPTION							MODEL NO.
LINE VOLTAGE THERMOSTAT								
**DD	SPST	30 Amp	120-240V	25 Amp	277V	40°-90°		TW1510
EE	DPST	30 Amp	120-240V	25 Amp	277V	40°-90°F		TW1512
LOW VOLTAGE THERMOSTAT (ALL CA1 MODELS)								
FF	SPST	Low Volt/Pilot Duty	50°-80°F	(3.3. thru 20 Kw units)				A6176
GG	2-Stage	Low Volt	45°-85°F	(25 thru 50 Kw units)				TW123
STRATIFICATION THERMOSTAT								
II	SPST	Line Volt	120-277V	70°-140°F				TC1602
SUMMER FAN SWITCH								
KK	SPST	Line Volt	120-277V					FSW5111
LL	SPST	Low Volt	(w/Relay)					FSW5112
LOW VOLTAGE THERMOSTAT & SUMMER FAN SWITCH (w/Relay) (ALL CA1 MODELS)								
M	SPST	Low Volt	40°-90°F					TFS5101
N	2-Stage	Low Volt	45°-85°F					TFS5102

NOTE: Control Accessories shipping wt. approx. 1 lb. each.
**Use DPST when three phase control is required.

Par. 2.2.1 h. Unit Heater. Par. 3.10

SARCO PIPELINE STRAINERS

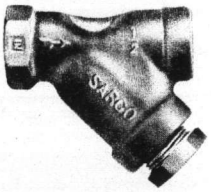

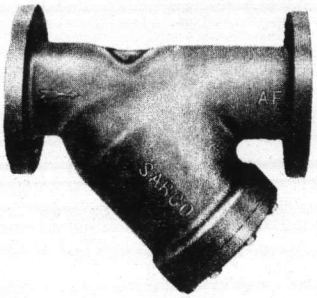

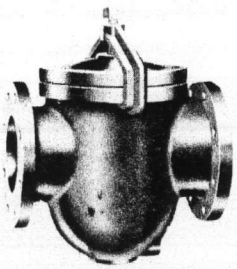

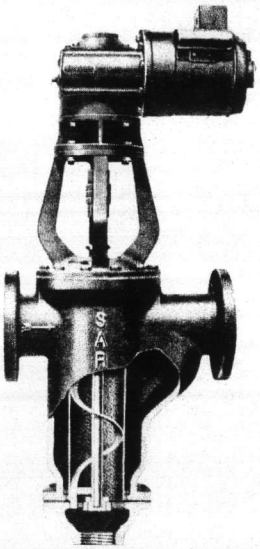

Type	Body Material	Connections	Standard Sizes, Inch	Steam Pressure, psig	Steam Temperature, F	Fluid Pressure, psig*	
AT	Semi-Steel	Screwed	¼ to 3	250	406	300	4
AF-125	Semi-Steel	Flanged	2 to 12	125	353	175	
			14 & 16	100	338	150	5
AF-250	Semi-Steel	Flanged	2 to 12	250	406	400	
			14 & 16	200	388	300	
BT	Bronze	Screwed and Pipe Sweat‡	¼ to 3	250	406	500	
BF-150	Bronze	Flanged	2 to 8	150	550	225	6
BF-300	Bronze	Flanged	2 to 8	300	550	500	
CT	Cast Steel	Screwed and Socket Weld	½ to 2	600	850	1440	7
CF-150	Cast Steel	Flanged	2 to 12	150	500	275	
CF-300	Cast Steel	Flanged	2 to 12	300	850	720	7
CF-600	Cast Steel	Flanged	2 to 8	600	850	1440	
DT	Ductile Iron	Screwed	½ to 2	400	450	600	8
Stainless	316 SS	Screwed	¼ to 3	600	1125	1440	8
Basket	Semi-Steel	Flanged-125	2 to 12	125	353	175	
			14 to 20	100	338	150	
		Flanged-250	2 to 12	250	406	400	9
			14 to 20	200	390	300	
	Cast Steel	Flanged	2 to 12	600	850	1440	
Scraper	To Specification	Screwed	¼ to 3	To Specification			10
		Flanged	3 to 8				

For special screens other than standard see table page 9.

*Water, oil or gas at 150°F—non shock. ‡Not available in tubing sweat.

Par. 2.2.1
I. Strainers and Traps
Par 6.3.2

SEMI-STEEL STRAINERS screwed

Type	Sizes	Connections	Stainless Steel Screen	Steam		Liquid	
				Pressure, psig	Temperature, degrees F	Pressure, psig	Temperature, degrees F
AT	¼ to 3	Screwed	20-mesh .033" openings	250	406	300	150

For special screens other than standard see table page 9.

Capacity tables on back cover.

For steam, gases or liquids. Heavy-duty body is semi-steel of 30,000 psi minimum tensile strength, ASTM 278—Class 30. Body is reinforced with external rib for maximum strength. Long, tapered screen socket in body assures correct screen position and tight fit without buckling. Cap design provides a sediment collection chamber below screen.

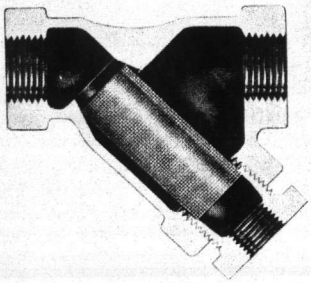

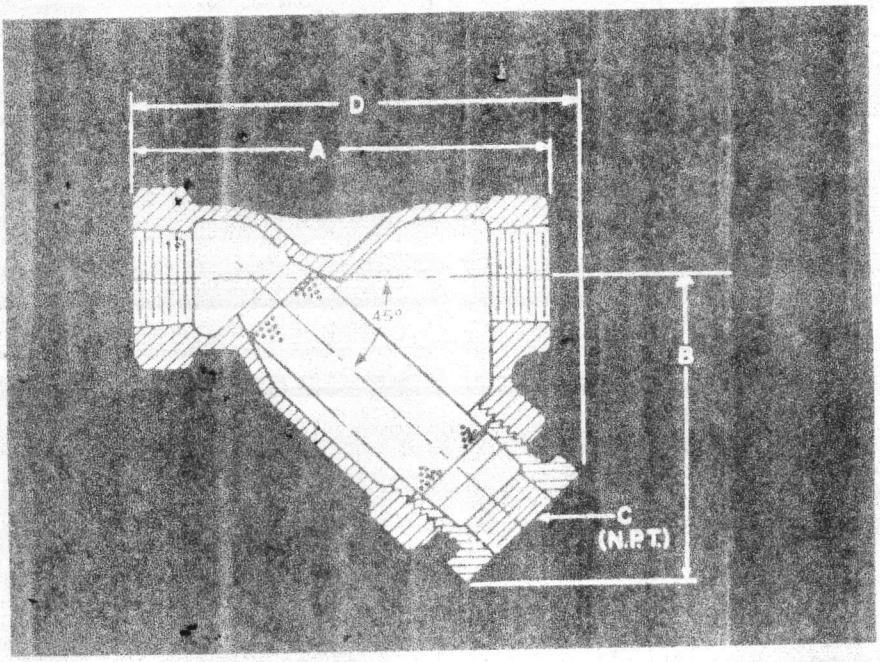

Size, N.P.T.	Dimensions, Inches				Net Weight Pounds
	A	B	C	D	
¼	2⅞	2 3/16	¼	3	1
⅜	2⅞	2 3/16	¼	3¼	1
½	3 5/16	2 11/16	⅜	3⅜	1
¾	4⅜	3⅜	½	4⅝	2
1	4⅞	3½	¾	5	3
1¼	5⅜	4 3/16	1	5¾	4½
1½	6⅛	4½	1¼	6⅜	7
2	7½	5 7/16	1½	7¾	12
2½†	8⅝	6¼	1¼	9⅛	20½
3†	10⅛	7⅛	1¼	10¾	31

NOTE: † 2½ and 3 strainers have flanged caps.

Par. 2.2.1
I. Strainers and Traps
Par. 6.3.2

SEMI-STEEL STRAINERS flanged

Type	Sizes	Connections	Stainless Steel Screen	Steam		Liquid	
				Pressure, psig	Temperature, degrees F	Pressure, psig	Temperature, degrees F
AF-125	2 to 6 8 to 12 14 & 16	Flanged	See table below	125 125 100	353 353 338	175 175 150	150 150 150
AF-250	2 to 12 14 & 16	Flanged	See table below	250 200	406 388	400 300	150 150

For special screens other than standard see table page 9.

Capacity tables on back cover.

TYPE AF-125 SEMI-STEEL FLANGED

For steam, water, oil, gas or air to provide protection for equipment. Semi-steel bodies are ASTM A278 Class 30 with ASA standard flange connections and self-aligning, tight-fitting screens. Standard screens shown below are available from stock. Others available at extra cost on order.

TYPE AF-250 SEMI-STEEL FLANGED

Semi-steel bodies, ASTM A278 Class 30 with ASA standard flange connections have self-aligning, tight-fitting screens.

AF STANDARD STAINLESS STEEL SCREENS

Sizes	Steam	Water
2 to 3 AF-125	20-mesh .033" openings	20-mesh .033" openings
2 to 3 AF-250	3/64" perforations	3/64" perforations
4 to 8 AF-125 & 250	3/64" perforations	1/8" perforations
10 to 16 AF-125 & 250	1/16" perforations	1/8" perforations

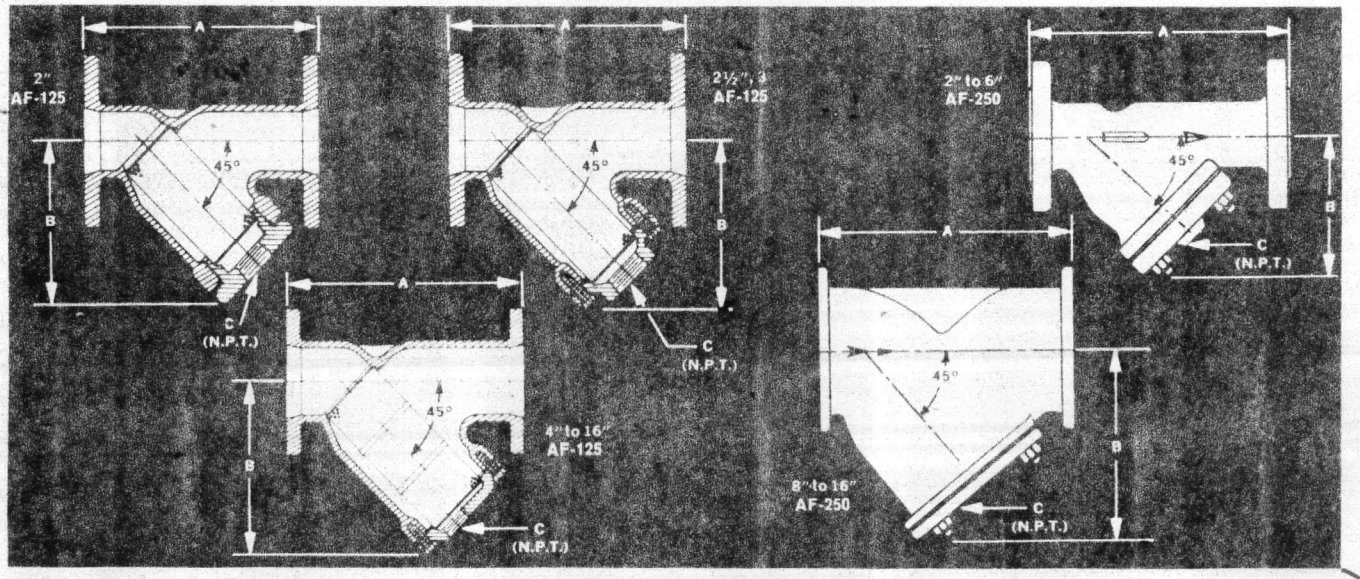

AF DIMENSIONS AND WEIGHTS

Size	AF-125				AF-250			
	Dimensions, Inches			Net Weight, Pounds	Dimensions, Inches			Net Weight, Pounds
	A	B	C		A	B	C	
2	8¾	5¾	1	21	11½	5⅝	1	30
2½	10	6¾	1¼	30	13	6¼	1¼	42
3	11½	7⅝	1¼	39	14	7¾	1¼	56
4	15½	10⅜	1¼	92	17	10¾	1¼	104
5	17¼	12⅞	1½	117	19	12⅝	1½	160
6	20	15⅜	1½	170	21	15	1½	232
8	22⅞	17	2	272	23	18¾	2	460
10	26	20¼	2½	424	31⅝	22	2½	746
12	30¼	24	2½	712	32½	25½	2½	1100
14	32¾	26	2½	910	37¾	26¼	2½	1320
16	37	33	2½	1190	38⅝	33½	2½	1680

Par. 2.2.1
I. Strainers and Traps
Par. 6.2.2

SARCO COMPANY

One of the White Consolidated Industries

WCI

ENGINEERING DATA
No. 450-K32
January, 1980

P.O. BOX 1... TULLYTOWN, PA. 1907... PHONE 215 ... TELEX ...

FLOAT-THERMOSTATIC STEAM TRAPS

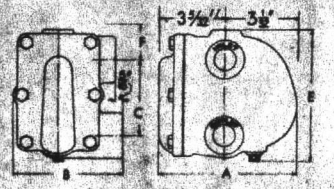

¾"& 1" FT-15—FT-125
1¼" FT-15—FT-80

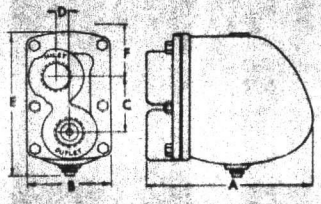

2" FT-20

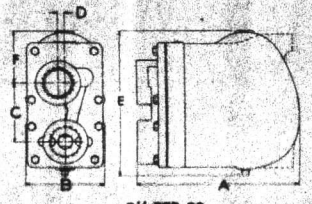

2" FTB-30
2½" FTB-40
1½", 2", 2½" FTB-175
1½" & 2" FTB-175 shown in solid line
2" FTB-30 & all
2½" shown in dotted lines

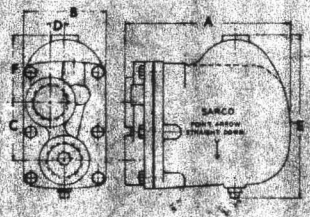

1½" & 2"
FT-15 to FT-125
1¼" FT-78 and FT-125
2" shown in dotted lines

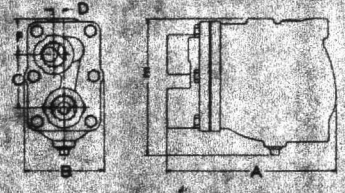

¾" to 1½"
FT-150 & FT-200

SIZE	TYPE	DIMENSIONS, INCHES A	B	C	D	E	F	WEIGHT LBS.
¾"	FT-15	6 3/16	4 5/8	3 5/16	—	5 3/4	1 5/16	9
1"	FT-15	6 3/16	4 5/8	3 5/16	—	5 3/4	1 5/16	9
1¼"	FT-15	6 3/16	4 5/8	3	—	5 3/4	1 1/2	9 1/2
1½"	FT-15	8 1/2	4 1/4	3	1 1/16	8 3/8	3 1/2	18
2"	FT-15	9 13/16	4 7/8	4 15/16	1/8	9 1/16	1 15/16	26
¾"	FT-30	6 3/16	4 5/8	3 5/16	—	5 3/4	1 5/16	9
1"	FT-30	6 3/16	4 5/8	3 5/16	—	5 3/4	1 5/16	9
1¼"	FT-30	6 3/16	4 5/8	3	—	5 3/4	1 1/2	9 1/2
1½"	FT-30	8 1/2	4 1/4	3	1 1/16	8 3/8	3 1/2	18
2"	FT-30	9 13/16	4 7/8	4 15/16	1/8	9 1/16	1 15/16	26
¾"	FT-75	6 3/16	4 5/8	3 5/16	—	5 3/4	1 5/16	9
1"	FT-75	6 3/16	4 5/8	3 5/16	—	5 3/4	1 5/16	9
1¼"	FT-75	8 1/2	4 1/4	3	1 1/16	8 3/8	3 1/2	18
1½"	FT-75	8 1/2	4 1/4	3	1 1/16	8 3/8	3 1/2	18
2"	FT-75	9 13/16	4 7/8	4 15/16	1/8	9 1/16	1 15/16	26
¾"	FT-125	6 3/16	4 5/8	3 5/16	—	5 3/4	1 5/16	9
1"	FT-125	6 3/16	4 5/8	3 5/16	—	5 3/4	1 5/16	9
1¼"	FT-125	8 1/2	4 1/4	3	1 1/16	8 3/8	3 1/2	18
1½"	FT-125	8 1/2	4 1/4	3	1 1/16	8 3/8	3 1/2	18
2"	FT-125	9 13/16	4 7/8	4 15/16	1/8	9 1/16	1 15/16	26
¾"	FT-150	8 1/2	3 15/16	2 9/16	1/2	6 7/8	1 13/16	15
1"	FT-150	8 1/2	3 15/16	2 9/16	1/2	6 7/8	1 13/16	15
1¼"	FT-150	10 3/4	5 3/4	3	9/16	9 1/8	2 1/2	30
1½"	FT-150	10 3/4	5 3/4	3	9/16	9 1/8	2 1/2	30
¾"	FT-200	8 1/2	3 15/16	2 9/16	1/2	6 7/8	1 13/16	15
1"	FT-200	8 1/2	3 15/16	2 9/16	1/2	6 7/8	1 13/16	15
1¼"	FT-200	10 3/4	5 3/4	3	9/16	9 1/8	2 1/2	30
1½"	FT-200	10 3/4	5 3/4	3	9/16	9 1/8	2 1/2	30
2"	FT-20	11 7/8	5 7/8	4 1/2	1/2	10 1/16	3	43
2"	FTB-30	14 1/2	9 1/4	7 1/4	1 3/8	15	3 3/4	89
2½"	FTB-40	14 11/16	9 1/4	7 1/4	1 3/8	15	3 3/4	90
1½"	FTB-175	8 13/16	4 1/4	3	1 1/16	8 1/16	2 1/4	22
2"	FTB-175	12 1/16	5 7/8	4 1/2	1/2	11	4	48
2½"	FTB-175	14 11/16	9 1/4	7 1/4	1 3/8	15	3 3/4	90

Materials of Construction

Body & Cover	Cast Iron, ASTM A126, Class B
Valve Head	Stainless Steel
Valve Seat	Stainless Steel
Mechanism*	Stainless Steel
Air Vent	Stainless Steel
Float	Stainless Steel

* Except FT-150, 200 & FTB which is Cast Brass with Stainless Steel heads and seats.

CERTIFIED FOR:

NAME OF JOB: Par 2.2.1 I Strainers + Traps

CUSTOMER: _____ DATE _____ par. 6.3.3

SARCO ORDER NO: _____ BY _____

SARCO FLOAT & THERMOSTATIC TRAP CAPACITIES

Pressure at Trap Inlet (PSIG)

Size	Type	1/4	1/2	1	2	5	10	15	20	30	40	50	75	100	125	150	175	200
3/4"	FT-15	279	369	489	650	785	1000	1075										
1"	FT-15	279	369	489	650	785	1000	1075										
1-1/4"	FT-15	600	770	980	1240	1640	2000	2340										
1-1/2"	FT-15	1100	1700	2400	3300	5000	6600	7600										
2"	FT-15	2300	2800	3600	4650	6900	9000	10900										
3/4"	FT-30	279	369	489	650	785	1000	1075	1210	1370								
1"	FT-30	279	369	489	650	785	1000	1075	1210	1370								
1-1/4"	FT-30	375	500	690	910	1200	1500	1680	1800	2000								
1-1/2"	FT-30	1000	1300	1700	2300	3400	4600	5500	6000	7000								
2"	FT-30	1300	1800	2500	3400	5200	6800	7800	8600	10000								
3/4"	FT-75	160	213	280	365	520	700	795	875	970	1120	1230	1450					
1"	FT-75	160	213	280	365	520	700	795	875	970	1120	1230	1450					
1-1/4"	FT-75	390	550	635	910	1330	1850	2150	2400	2800	3050	3300	3800					
1-2/2"	FT-75	550	725	960	1300	1900	2650	3050	3400	4000	4400	4750	5400					
2"	FT-75	850	1100	1500	2000	3100	4150	4750	5200	5800	6400	6800	7700					
3/4"	FT-125	100	135	175	230	330	415	500	565	665	750	830	970	1110	1190			
1"	FT-125	100	135	175	230	330	415	500	565	665	750	830	970	1110	1190			
1-1/4"	FT-125	280	370	480	630	910	1200	1450	1650	1900	2075	2250	2650	2950	3150			
1-1/2"	FT-125	400	520	680	890	1300	1700	2050	2300	2700	3000	3200	3800	4200	4500			
2"	FT-125	550	675	880	1225	1950	2600	3000	3250	3800	4200	4600	5500	6100	6600			
3/4"	FT-150	170	235	315	425	650	810	940	1020	1175	1310	1410	1625	1755	1900	2025		
1"	FT-150	170	235	315	425	650	810	940	1020	1175	1310	1410	1625	1755	1900	2025		
1-1/4"	FT-150	275	360	470	610	920	1120	1300	1415	1600	1770	1935	2210	2360	2600	2750		
1-1/2"	FT-150	275	360	470	610	920	1120	1300	1415	1600	1770	1935	2210	2360	2600	2750		
3/4"	FT-200	120	160	210	280	400	520	600	660	770	850	910	1050	1175	1260	1370	1440	1512
1"	FT-200	120	160	210	280	400	520	600	660	770	850	910	1050	1175	1260	1370	1440	1512
1-1/4"	FT-200	250	335	450	600	870	1100	1280	1410	1640	1800	1910	2200	2410	2610	2825	2975	3130
1-1/2"	FT-200	250	335	450	600	870	1100	1280	1410	1640	1800	1910	2200	2410	2610	2825	2975	3130
2"	FT-20	6000	7500	9000	11500	15500	19000	22000	25000									
2"	FTB-30	12000	15800	19000	24000	31500	38000	41500	43500	45500								
2-1/2"	FTB-40	19000	25000	30000	38000	50000	60000	66000	69000	72000	73500							
1-1/2"	FTB-175	920	1300	1850	2100	2600	3200	3750	4200	5000	5650	6220	7400	8310	9220	10150	10950	
2"	FTB-175	2600	4000	5500	7100	9500	11500	13000	14000	16000	17500	18500	21000	22500	24000	25500	27000	
2-1/2"	FTB-175	7000	12000	17000	21000	27000	32000	35500	38500	42500	46000	48500	54000	58000	61000	64000	68000	

RATINGS: Series FT-15 thru FT-125 Body and Cover of Cast Iron ASTM 278, Class 30 designed to withstand 125 psi. Series FT-150 thru FT-200 and FTB-30 thru FTB-175 Body and Cover of Cast Iron designed to withstand 250 psi.

SHEMA RATED CAPACITIES (See Note)

Size	Type	1/4	1/2	1	2	5	10	15
3/4"	FT-15	70	100	140	200	210	220	230
1"	FT-15	175	250	350	500	525	550	575
1-1/4"	FT-15	425	600	850	1200	1260	1320	1380
1-1/2"	FT-15	850	1200	1700	2400	2520	2640	2760
2"	FT-15	1775	2500	3550	5000	5250	5500	5750

NOTE: Capacity ratings on FT-15 traps are in accordance with standards adopted by the Steam Heating Equipment Mfrs. Assn. providing for continuous air elimination when the trap operates at maximum rating. A safety factor is not required. SHEMA rated trap capacities are based on pressure differential. All other trap ratings are actual continuous discharge capacities at steam temperature. A safety factor is recommended on all traps except Shema rated to provide reserve capacity for peak loads or other unusual or abnormal operating conditions.

Par. 2.2.1 I Par. 6.3.3 Steamers & Traps

SARCO COMPANY

One of the White Consolidated Industries

1951 26TH ST. S.W.,
ALLENTOWN, PA. 18105
PHONE 215 797-5830

SARCO COMPANY, INC.

ENGINEERING DATA
No. 361-K43

AUGUST 1983

[illegible] 1ST AVENUE, S.W. • P.O. BOX 1317, ALLENTOWN, PA. 18105 • PHONE 215 797-3828 • TELEX 84-7434

HM34 *CAST STEEL* INVERTED BUCKET TRAP

with ½" to 1" Screwed, Socket Weld or Flanged Ends

MAXIMUM WORKING CONDITIONS

0-464 psi at 482°F / *32 bar at 250°C*

The maximum working differential pressure is limited by the orifice size which is indicated by the stroke number, eg. 34/6, and is shown in the following table:

Size	Maximum differential pressure				
	60 psi *4 bar*	120 psi *8.5 bar*	170 psi *12 bar*	290 psi *20 bar*	464 psi *32 bar*
½" /15 mm	34/8	34/7	34/6	34/5	34/4
¾"LC/20mmLC	34/8	34/7	34/6	34/5	34/4
¾" /20mm	34/10	34/8	34/7	34/6	34/5
1" /25mm	34/12	34/10	34/8	34/6	34/5

MAXIMUM BODY DESIGN CONDITIONS

580 psi at 248°F / *40 bar at 120°C*
464 psi at 482°F / *32 bar at 250°C*
304 psi at 752°F / *21 bar at 400°C*
Cold Hydraulic Test 870 psi / *60 bar*

PIPE CONNECTIONS

HM341 Screwed NPT, API or BSP
HM342 Socket Weld Ends
HM343 Flanged to ANSI 150 or 300, DIN PN 40 and BS 4504.

MATERIALS OF CONSTRUCTION

No	Part	Material
1	Cover	Cast Steel ASTM A216WCB
2	Cover Bolts & Nuts ½" to ¾" 1"	Steel M8 x 30 M12 x 45
3	Body	Cast Steel ASTM A216WCB
4	Bucket	Stainless Steel
5	Valve Guide Plate Screws	Stainless Steel M4.5 x 10 mm
6	Valve Guide Plate	Stainless Steel
7	Cover Gasket	Compressed Asbestos Fibre
8	Valve Seat	Stainless Steel
9	Valve	Stainless Steel
10	Valve Lever	Stainless Steel
11	Ferrule	Stainless Steel
12	Strainer Screen	Stainless Steel
13	Strainer Cap	Stainless Steel
14	Strainer Gasket	Compressed Asbestos Fibre

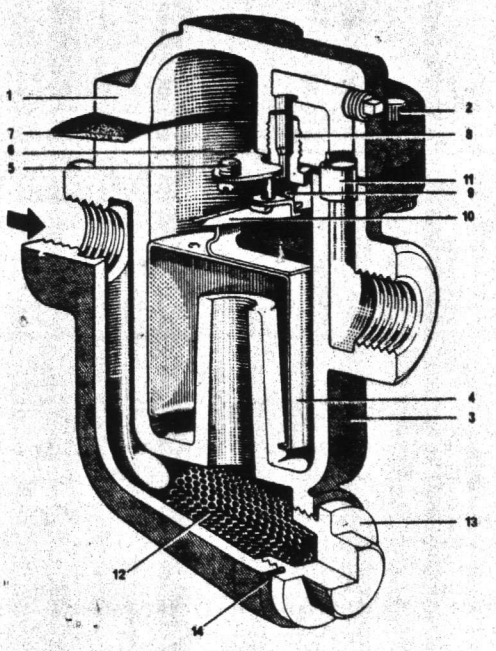

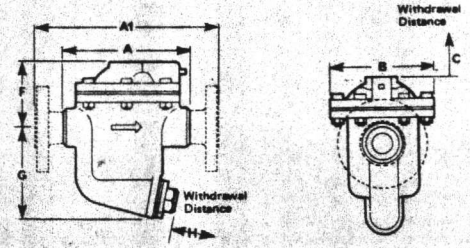

DIMENSIONS AND WEIGHTS

Size		Dimension A	A1	B	C	F	G	H	Weight Scr/SW	Flanged
½"	in	4¾	8⁹⁄₃₂	4⅛	4	2⅝	3½	2⅜	5¾ Lb	9⅞ Lb
15mm	mm	120	210	105	100	67	89	60	2.6 Kg	4.5 Kg
¾"LC	in	4¾	8⁹⁄₃₂	4⅛	4	2⅝	3½	2⅜	5¾ Lb	15⁷⁄₁₆ Lb
20mmLC	mm	120	210	105	100	67	89	60	2.6 Kg	7.0 Kg
¾"	in	4¾	8⁹⁄₃₂	4⅛	4	3½	4⁷⁄₃₂	2⅜	8¹³⁄₁₆ Lb	15⁷⁄₁₆ Lb
20mm	mm	120	210	105	100	88	107	60	4.0 Kg	7.0 Kg
1"	in	7³⁄₃₂	9⅛	6⅝	6³⁄₁₆	5²³⁄₃₂	4¾	3⅜	22⅞ Lb	26½ Lb
25mm	mm	180	230	160	160	145	120	85	10.4 Kg	12.0 Kg

CERTIFIED FOR:

NAME OF JOB: Par. 2.2.1 I strainers + Traps

CUSTOMER: _____ DATE Par. 6.3.3

SARCO ORDER NO: _____ BY _____

HM34 INVERTED BUCKET TRAP

CAPACITIES

Hot condensate at approximately 6°F / 3°C below saturated steam temperature.

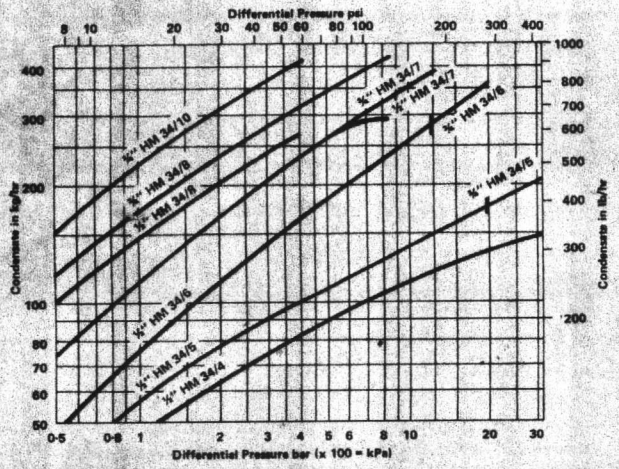

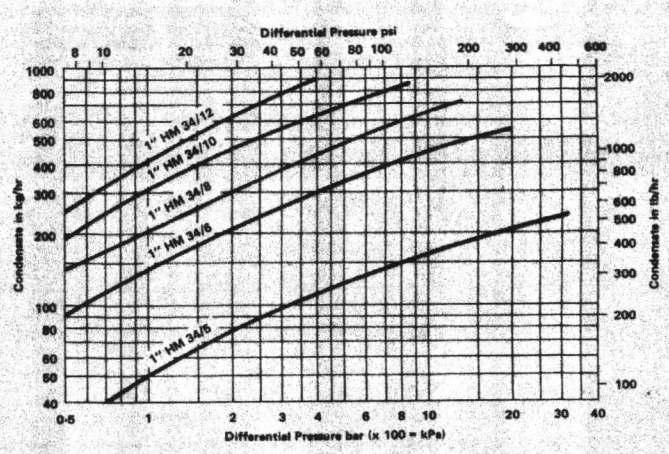

TRAP SELECTION AND INSTALLATION

Select trap size with orifice which meets the capacity and operating pressure requirements of the application, then specify pipe connections desired.

Example: ½" HM341/5 with screwed ends for pressure to 290 psi.

Trap may be insulated when installed where it is subject to freezing conditions.

AVAILABLE SPARE PARTS

The spare parts available are shown in heavy outline. Parts drawn in broken line are not supplied as spares.

AVAILABLE SPARE PARTS	
VALVE AND SEAT ASSEMBLY State pressure range	A,B,C D (2 of)
BUCKET	E
COVER GASKET AND FERRULE (pkt of 3 of each)	F,G
STRAINER SCREEN	H
STRAINER SCREEN GASKET (pkt of 3 of each)	J
SET OF COVER BOLTS AND NUTS (set of 6)	K

HOW TO ORDER PARTS

Always order spares by using the description given in the column headed Available Spare Parts and stating the size and series of the trap.

Example: 1—Valve and Seat Assembly for ½" Sarco HM34/7 Inverted Bucket Steam Trap.

HOW TO FIT VALVE AND SEAT ASSEMBLY

Isolate trap, remove cover by undoing cover nuts K. Unhook the bucket from the valve lever A. Remove the valve seat B. Remove the valve guide plate C by undoing the two screws D. Screw in new valve seat, using a little jointing paste on the threads and making sure the joint faces are clean. Fix new valve guide plate in position by new screws which are supplied, hook new valve lever over pins on valve guide plate and centralize valve to the orifice and tighten screws.

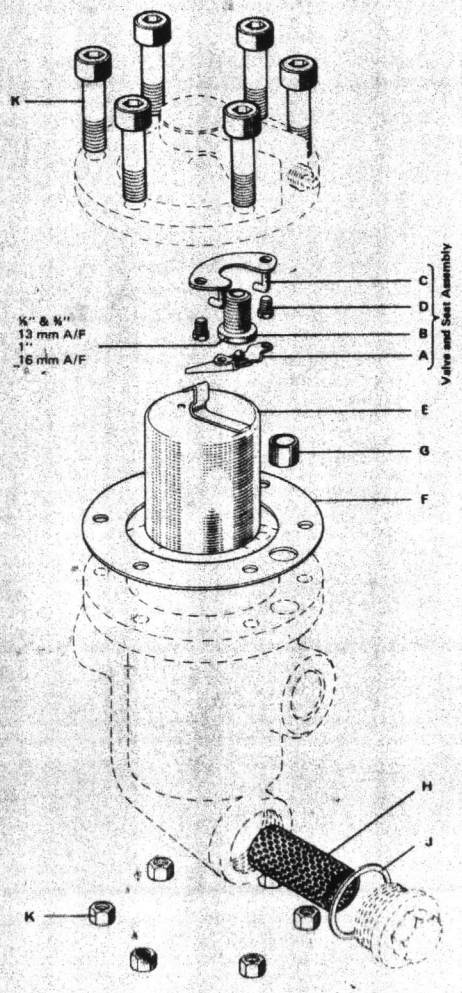

SARCO COMPANY, INC.
1951 26TH ST. S.W. • P.O. BOX 119, ALLENTOWN, PA 18105
PHONE (215) 797-5830 TELEX 84-7434

Par. 2.2.1
I STRAINERS & TRAPS
Par. 6.3.3

GPS 15M Printed in U.S.

Morgan Sales & Associates

2702 GREENBAY ROAD • FAYETTEVILLE, NORTH CAROLINA 28303
TELEPHONE: (919) 484-5796

PROJECT----------UNACCOMPANIED ENLISTED PERSONNEL HOUSING (UPEH)

LOCATION----------MARINE CORPS BASE CAMP LEJEUNE, NORTH CAROLINA

MECHANICAL CONTRACTOR----------RAMSEY AIR CONDITIONING

ENGINEER----------DEWEY R. WINCHESTER

MANUFACTURER----------WEISS INSTRUMENTS, INCORPORATED

70 - Weiss Model 5BM25, bi-metal dial type thermometers with stainless steel case, 2½" stem, ½"NPT fixed thread back connection, and Model B-2½ brass separable socket; 5" diameter dial with glass face gasketed within the case, moisture proof; accuracy within 1% of scale range. Scale range from 0°F to 250°F, in 5° increments.

Submitted under Section 15801, Page 15801-18, Paragraph 6.3.5.

Par. 2.2.1
J. gages + Thermometers
Par. 6.3.5

BOX 33442
RALEIGH, N. C. 27606
(919) 851-0603

P. O. BOX 29146
GREENSBORO, N. C. 27408
(919) 643-6156

143 PINECREST PKWY.
WILMINGTON, N. C. 28401
(919) 343-1257

WEISS

BI-METAL DIAL THERMOMETERS

SERIES BM

MODEL 2BM —2″ DIAL
MODEL 3BM —3″ DIAL
MODEL 3BMS—3″ DIAL
→ MODEL 5BM —5″ DIAL
MODEL 5BMS—5″ DIAL

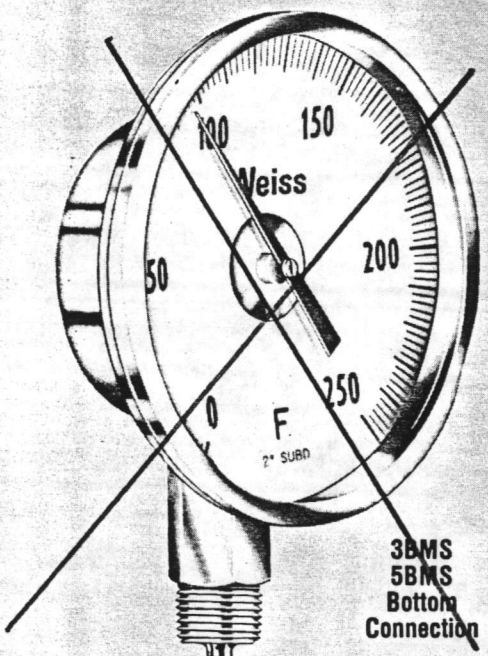

3BMS
5BMS
Bottom
Connection

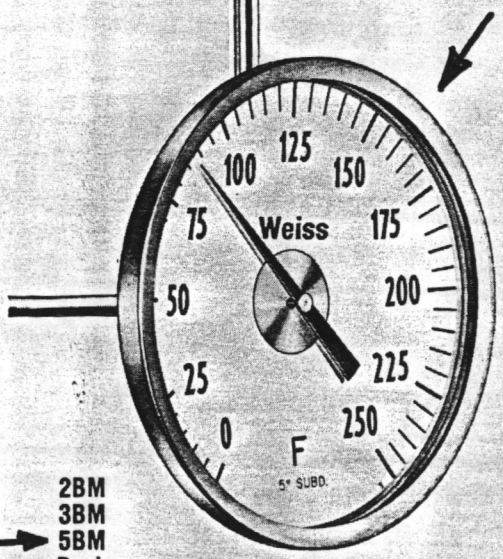

→ 2BM
3BM
5BM
Back
Connection

Par. 2.2.1
J. gages + Thermometers.
Par. 6.3.5

2″ DIAL

CATALOG NUMBERS

Catalog No. 2'' Back	Stem Length (including thread)	NPT
2BM25	2½″	¼″
2BM4	4″	¼″
2BM6	6″	¼″
2BM9	9″	¼″
2BM12	12″	¼″

Longer stem lengths available

3″ DIAL

CATALOG NUMBERS

Catalog No. 3'' Back	Catalog No. 3'' Bottom	Stem Length (including thread)	NPT
3BM25	3BMS25	2½″	½″
3BM4	3BMS4	4″	½″
3BM6	3BMS6	6″	½″
3BM9	3BMS9	9″	½″
3BM12	3BMS12	12″	½″

Longer stem lengths available

5″ DIAL

CATALOG NUMBERS

Catalog No. 5'' Back	Catalog No. 5'' Bottom	Stem Length (including thread)	NPT
→ 5BM25	~~5BMS25~~	2½″	½″
5BM4	5BMS4	4″	½″
5BM6	5BMS6	6″	½″
5BM9	5BMS9	9″	½″
5BM12	5BMS12	12″	½″

Longer stem lengths available

For separable Sockets and Standard Temperature Ranges, see back cover.

WEISS INSTRUMENTS, INC.
ESTABLISHED 1882
(516) 752-1655

WEISS

BI-METAL THERMOMETERS

→ **SERIES BM**
~~**SERIES RBM**~~
~~**SERIES VBM**~~
~~**SERIES PT, LAB**~~

CONSTRUCTION FEATURES

1- STAINLESS STEEL CASE — The entire case assembly is of type 304 stainless steel. To insure a moisture proof unit, the heavy glass face is securely gasketed with the case and bezel assembly, hermetically sealed.

2- STEM ASSEMBLY — The stem and fixed thread connection is fabricated of stainless steel. All welded construction insures complete corrosion resistance. The BM, RBM, and VBM series stem diameter is ¼", and for 2" dials the fixed thread is ¼" NPT, 3" and 5" dials the fixed thread is ½" NPT.

3- BI-METALLIC — The sensitive, precision formed bi-metallic element is accurately calibrated to meet certified temperature standards. This Helix assembly is silicone damped against vibration. The silicone fluid increases the speed of responses due to more rapid heat transfer from stem to bi-metallic element.

4- DIAL — The BM series has a single "dished" dial of anodized aluminum, with white matte background and black numerals and graduation lines. The RBM and VBM series dial have graduated scale markings that are "in-line" with the pointer tip. Errors in the reading due to optical parallax are elilliminated. The white enamel scale with contrasting jet black lines and numbers offer clear readabililty. The PT and LAB dial is white aluminum background with black numerals and graduation lines.

Par. 2.2.1
J. Gages and Thermometers.
Par. 6.3.5

5- ACCURACY — Accurate within 1% of scale range.

6- SEPARABLE SOCKETS — Separable sockets are available in all materials for direct attachment to the standard fixed stem thermometers.

SPECIFICATIONS

BM SERIES

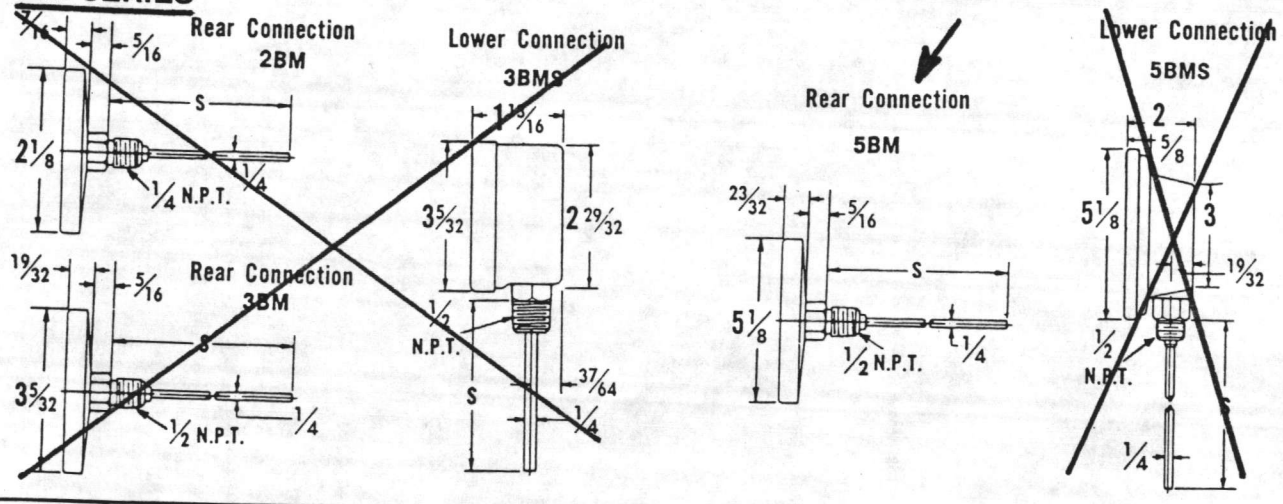

RBM SERIES

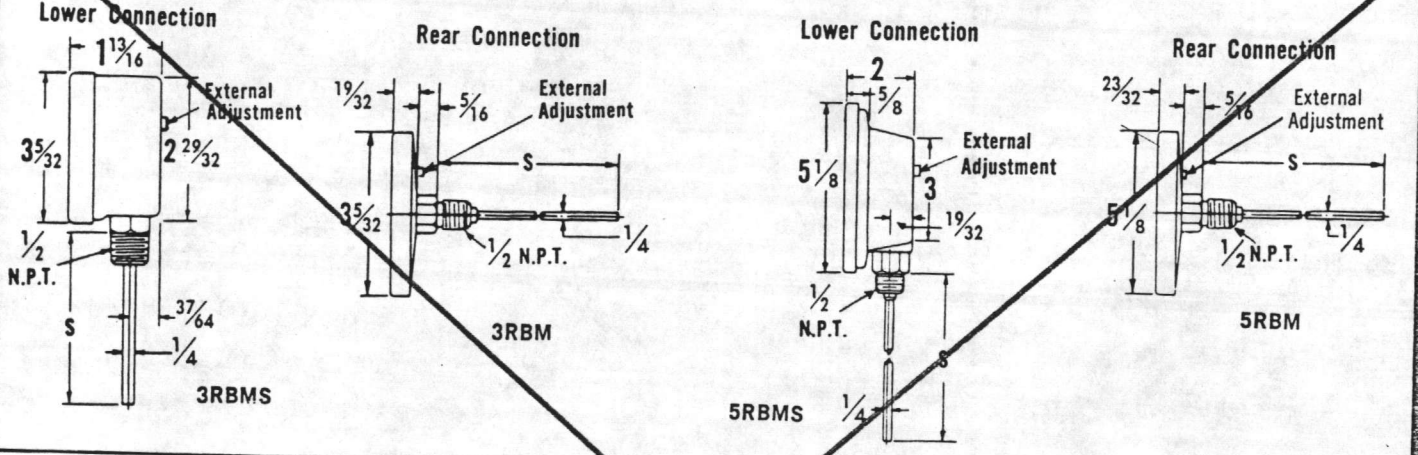

VBM SERIES

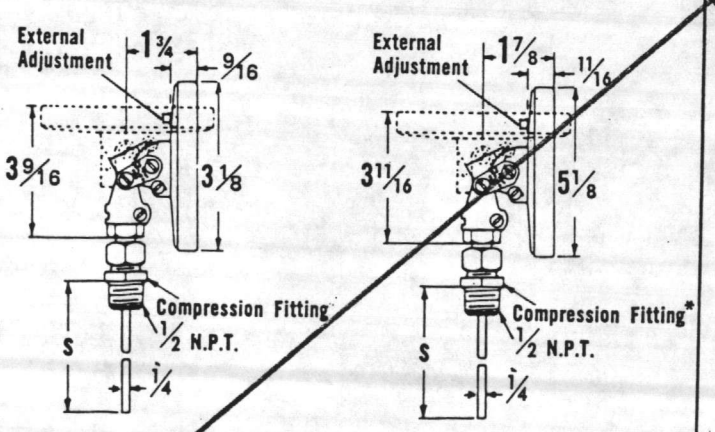

Par. 2.2.1
J. gages + thermometers.
Par. 6.3.5

MODEL 134

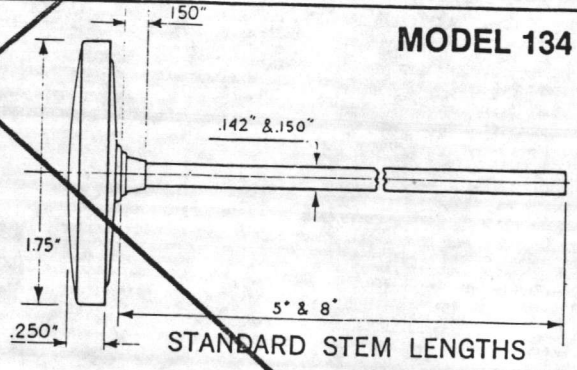

MODEL PT

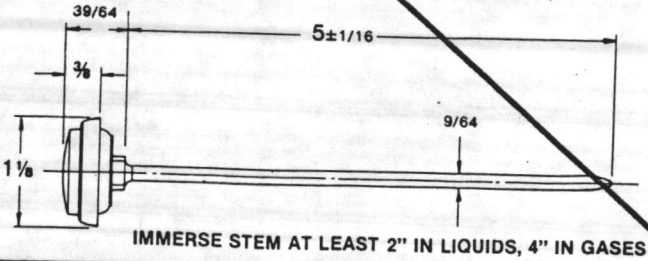

WEISS INSTRUMENTS, INC.
ESTABLISHED 1882
(516) 752-1655

TYPE EA14 GAUGE

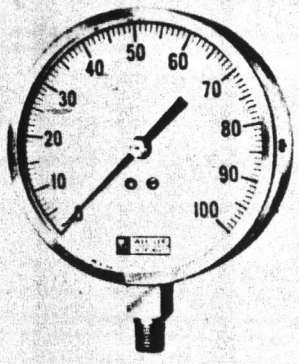

Produced especially for the large volume user, this rugged Weksler gauge is subjected to rigorous quality control standards. Long life and repeatable accuracy is assured.

- ★ 4½" Dial size
- ★ Corrosion resistant stainless steel case and ring. Plastic lens
- ★ Balanced adjustable black pointer
- ★ Guaranteed accurate to 1% of range

SPECIFICATIONS

- Silver soldered phosphor bronze tube with brass socket. Suitable for steam, water, air, oil, gas, or any medium not corrosive to copper alloys.
- Durable phosphor bronze movement provides good wearing characteristics and is recommended for average general use.
- Easy to read dial; white background with bold black numerals and graduations, 270° arc.
- ¼" N.P.T. bottom connection.

DIMENSIONS

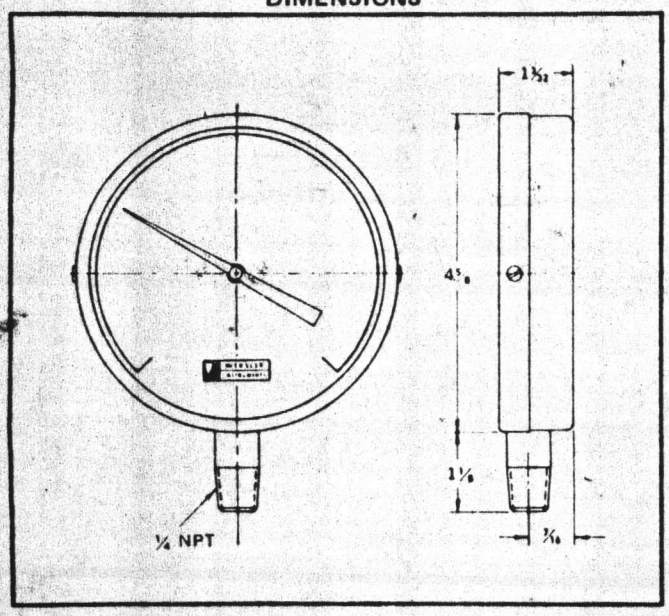

PRESSURE RANGES

DIAL RANGES	FIGURE INTERVALS	SMALLEST GRADUATION
0– 30 p.s.i.	5 p.s.i.	½ p.s.i.
0– 60 p.s.i.	10 p.s.i.	1 p.s.i.
0–100 p.s.i.	10 p.s.i.	1 p.s.i.
0–160 p.s.i.	20 p.s.i.	2 p.s.i.
0–200 p.s.i.	20 p.s.i.	2 p.s.i.
0–300 p.s.i.	50 p.s.i.	5 p.s.i.
0–500 p.s.i.	50 p.s.i.	5 p.s.i.

VACUUM RANGES

DIAL RANGES	FIGURE INTERVALS	SMALLEST GRADUATION
0–30" Hg. Vac.	5 in.	½ in.

COMPOUND RANGES

DIAL RANGES	FIGURE INTERVALS	SMALLEST GRADUATION
30"–0– 30 p.s.i.	10" & 5 p.s.i.	1" & 1 p.s.i.
30"–0–100 p.s.i.	15" & 10 p.s.i.	5" & 1 p.s.i.
30"–0–150 p.s.i.	30" & 25 p.s.i.	5" & 5 p.s.i.
30"–0–300 p.s.i.	30" & 50 p.s.i.	5" & 5 p.s.i.

NOTE: On compound range gauges the zero graduation is not to be used as a calibration reference point.

WHEN ORDERING: Specify (1) Type EA14 (2) Range.

Par. 2.2.1
J. gages & Thermometers

TYPE UA12-0 BEE LINE GAUGE

Par. 6.3.5

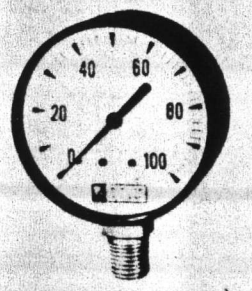

AVAILABLE RANGES

0-30" Hg. Vac.	0-30 p.s.i.
	0-60 p.s.i.
30"-0-30 PSI	0-100 p.s.i.
30"-0-60 PSI	0-160 p.s.i.
30"-0-150 PSI	0-200 p.s.i.
30"-0-300 PSI	0-300 p.s.i.
	0-600 p.s.i.

An inexpensive, rugged utility pressure gauge for the broad commercial and industrial market. 3-2-3% accuracy.

Furnished in ¼" NPT, bottom connected steel cases, the 2½" dial size Bee Line gauges measure water, air, oil, gas or any other medium not corrosive to brass and phosphor bronze.

WHEN ORDERING: Specify (1) Type UA12-0; (2) Range.

DIMENSIONS

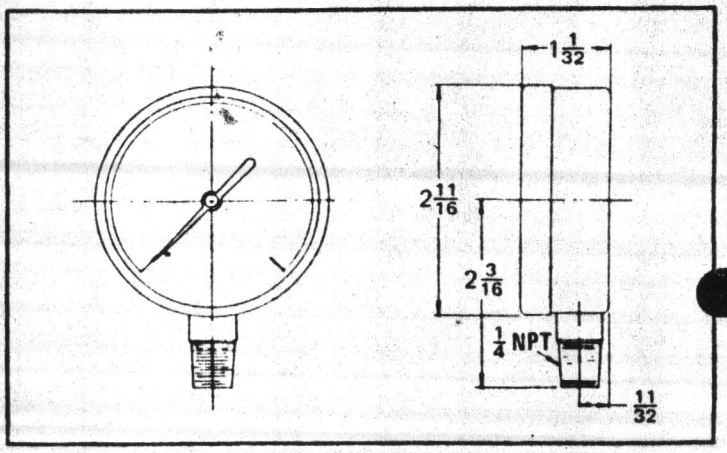

REDUCE FUEL BILLS!

STANDARD MODEL

Fits thermostats up to 6 1/8" wide x 5 1/4" high x 2 3/4" deep.

- NO WIRING OR REMOUNTING REQUIRED
- MOUNTS OVER PRESENT THERMOSTAT

LOCKING THERMOSTAT COVER

stat-Gard®

Virtually Unbreakable!

- Installed in minutes
- No wiring or remounting required
- Easily mounts over present thermostat
- Allows only authorized persons to adjust
- Complete with screws and two keys
- Controls respond quickly

stat-gard® — the most tamperproof design on the market. Made of virtually unbreakable Space Age Plastics. Designed to allow positive airflow and to eliminate tampering with thermostat controls. Installs easily...

WARRANTY

If your STAT-GARD fails or breaks for any reason, return for FREE REPLACEMENT to Sherwood Products, P.O. Box 680475, San Antonio, Texas 78268. Enclose $5.00 for postage and handling. Other than the above, there is no warranty, express or implied, in connection with the product or its proposed use.

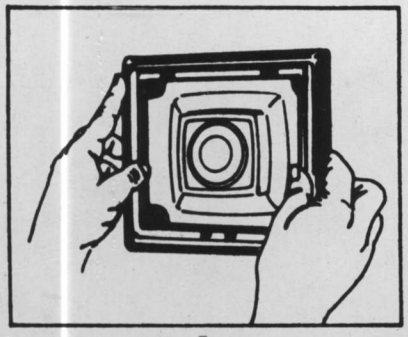

A.

Center the Stat-Gard over the thermostat. No disconnecting of the thermostat needed.

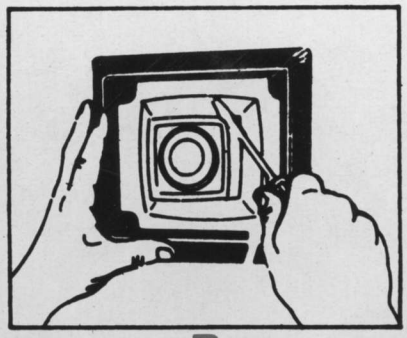

B.

Installs with four mounting screws. Screwdriver only required tool. On some walls expansion type anchors may be required.

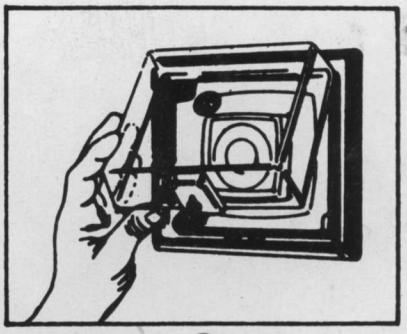

C.

To change thermostat setting, insert key and turn clockwise to stop, then lift cover.

THIS PACKAGE CONTAINS RECYCLED PAPERBOARD

METAL*AIRE®

SUBMITTAL SCHEDULE

SUBMITTED BY: Hoffman & Hoffman, Inc. 22-1116R DATE: 4/27/84
PROJECT NAME & LOCATION Unaccompanied Enlisted Personnel Housing, Camp Lejeune, NC
ARCHITECT: J. N. Pease Associates ENGINEER: --
CONTRACTOR: Ramsey Air Conditioning, Inc. CONTR. P.O. NO. 0518

Dwg No	Area Served	Product Description	Listed Size	Qty.	C.F.M.	Inlet Vel. FPM	ΔP	Throw Feet	NC	Acc.
4024-1	Ex. Riser #2	RHD	10"x6"	15	100	250	.010	--	<20	OBD
4024-1	Ex. Riser #2	RHD	6"x4"	15	40	225	.010	--	<20	OBD
4002	Terminal Air Blender	VH	30"x5"	480	260	300	.024	16	<20	--
4024-1	Terminal Air Blender	RH	30"x6"	480	260	400	.018	--	<20	--
4024-1	Terminal Air Blender	RH	10"x10"	480	190	300	.012	--	<20	--
4002	FCU-1	VH	34"x6"	15	600	400	.042	24	<20	--
		SUBMIT DOOR GRILLES								
	Note: All Registers and Grilles To Be Furnished With Factory Prime									
	Coat, Sponge Rubber Gasket.					S.L.				
	Spec. # 05-82-2244					AIR BLENDERS SHALL BE RATED 115-120 VOLTS,				
	15801-13 PP 5.5					72.8 WATTS MAX.				
						Par. 2.2.1 K. Diffusers, Registers and Grilles				
						Par 5.5				

AIR DISTRIBUTION SUBMITTAL

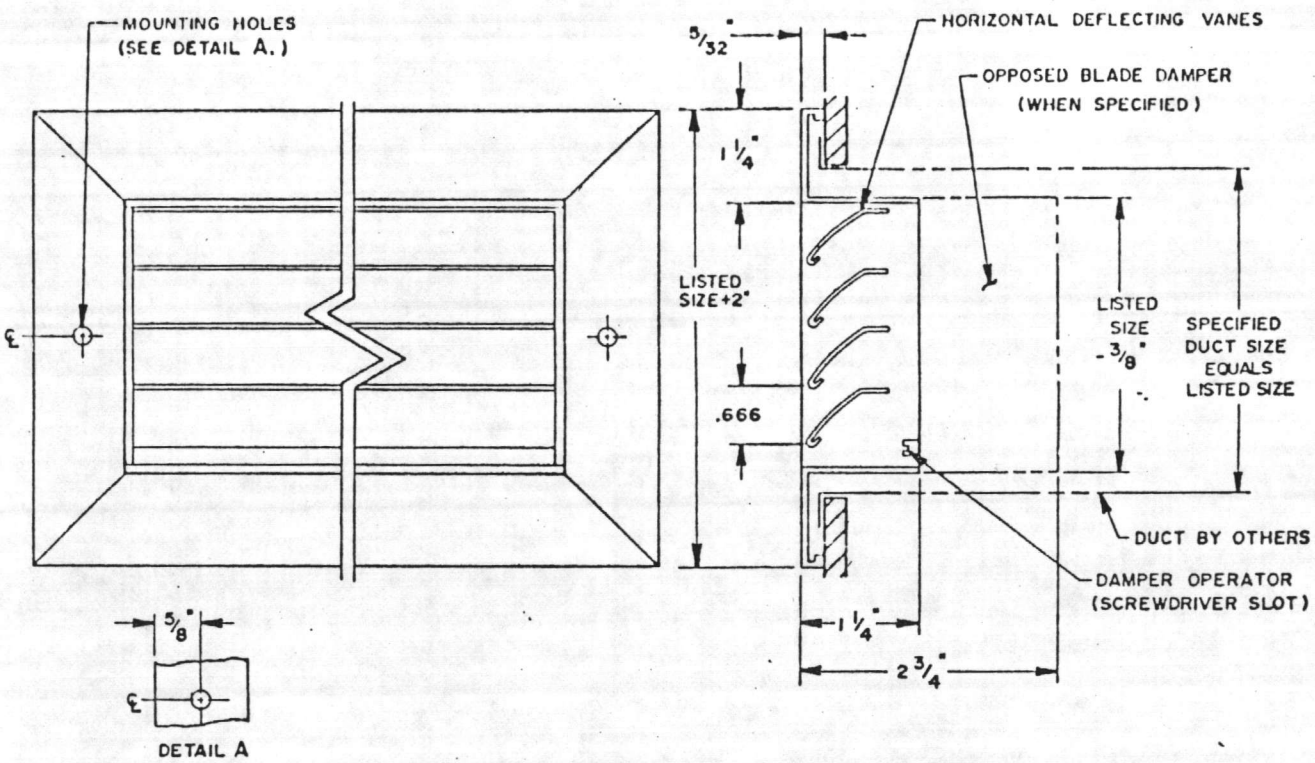

NOTES:

1. CONSTRUCTION: FRAME OF ALUMINUM MATERIAL .040 THICKNESS. DEFLECTING VANES ARE .040 ALUMINUM FORMED TO STREAMLINED 45° CURVE. FRAMES ARE 1-PIECE CONSTRUCTION THRU SIZE 14"X14" UNLESS OTHERWISE SPECIFIED. SIZES ABOVE 14"X14" HAVE HEAVY DUTY EXTRUDED ALUMINUM FRAMES.
2. FINISH: ~~SATIN ALUMINUM ENAMEL.~~ PRIME COAT S.L.
3. MOUNTING: UNIT MOUNTING SCREWS FURNISHED.
4. DAMPER: OPPOSED BLADE DAMPER FURNISHED WHEN SPECIFIED. FOR DETAILS OF DAMPER CONSTRUCTION, SEE DRAWING NO. 6006-1.
5. DUCT FABRICATION: UNIT COLLAR OR NECK DIMENSIONS VARY SLIGHTLY, THEREFORE DUCTS MUST BE FABRICATED TO SPECIFIED NOMINAL SIZE, I.E., 12"X 12" SPECIFIED, DUCT I.D. 12"X 12".

METAL*AIRE®
Aluminum Air Distribution Products

MODEL RH OR RHD

45° DEFLECTION

SIDEWALL OR CEILING RETURN

☐ MODEL RH (GRILLE - NO DAMPER)

☐ MODEL RHD (REGISTER - WITH DAMPER)

DRAWN BY:	JG	CHK'D. BY:	KR
DATE:	15 MAY 1970	DWG. NO.	4024-1

Unaccompanied Enlisted Personnel

JOB NAME: Housing

LOCATION: Camp Lejeune, NC

ARCHITECT: J. N. Pease Associates

ENGINEER: J. N. Pease Associates

CONTRACTOR: Ramsey Air Conditioning, Inc.

SUBMITTED BY:

Hoffman & Hoffman, Inc.
22-1116R

Par 2.2.1
K. Diffusers Registers Grilles
Par 5.5

AIR DISTRIBUTION SUBMITTAL

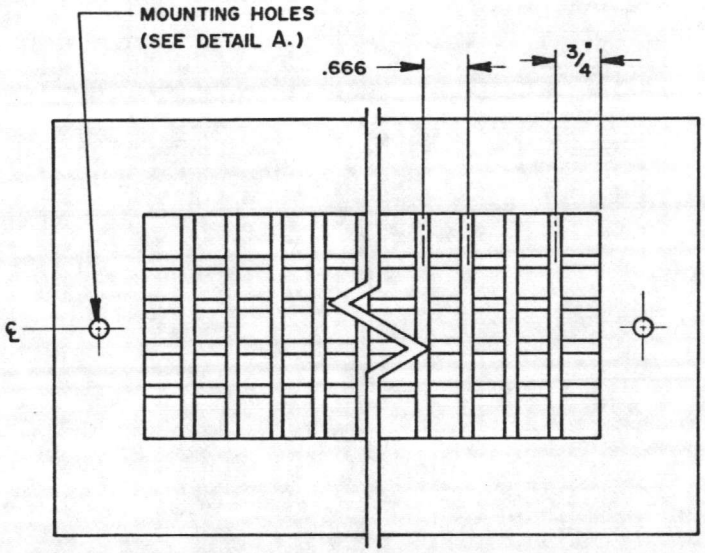

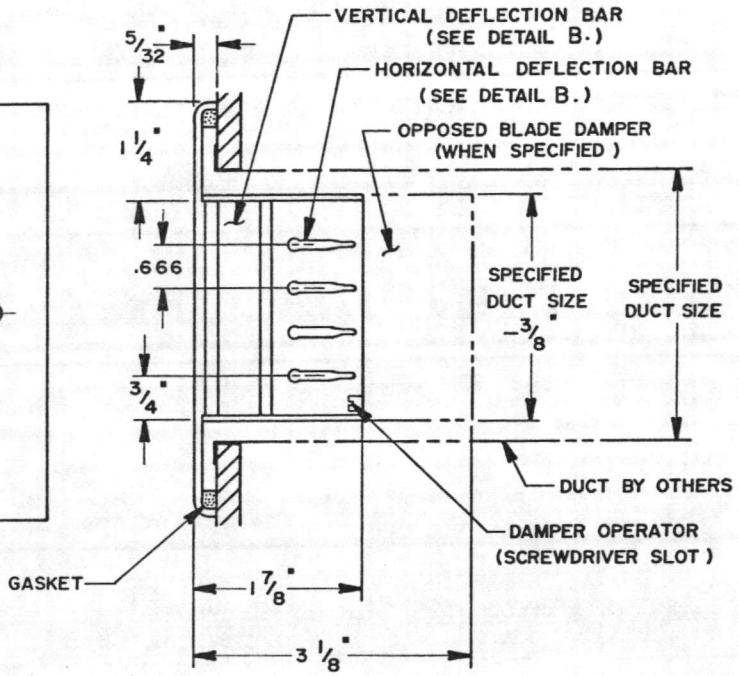

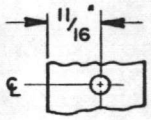

DETAIL A
I-PIECE FRAME SHOWN.
EXTRUDED FRAME 9/16"

DETAIL B

NOTES:

1. CONSTRUCTION: FRAME OF ALUMINUM MATERIAL .040. DEFLECTING BARS OF ALUMINUM MATERIAL .019 THICKNESS ROLL-FORMED TO SEMI-AIR-FOIL SHAPE. FRAMES ARE I-PIECE CONSTRUCTION THRU SIZE 14"X 8". SIZES ABOVE 14"X 8" HAVE HEAVY DUTY EXTRUDED ALUMINUM FRAMES.
2. FINISH: ~~SATIN ALUMINUM ENAMEL.~~ PRIME COAT S.C.
3. MOUNTING: UNIT MOUNTING SCREWS FURNISHED.
4. DAMPER: OPPOSED BLADE DAMPER FURNISHED WHEN SPECIFIED. FOR DETAILS OF DAMPER CONSTRUCTION, SEE DRAWING NO. 6006.
5. FRAME: GASKETED TO PREVENT AIR LEAKAGE AND MINIMIZE SMUDGING.
6. DUCT FABRICATION: UNIT COLLAR OR NECK DIMENSIONS VARY SLIGHTLY, THEREFORE DUCTS MUST BE FABRICATED TO SPECIFIED NOMINAL SIZE, I.E., 14"X 6" SPECIFIED, DUCT I.D. 14"X 6".

METAL*AIRE
Aluminum Air Distribution Products

MODEL VH OR VHD

DOUBLE DEFLECTION
SIDEWALL SUPPLY

☐ MODEL VH (GRILLE-NO DAMPER)
☐ MODEL VHD (REGISTER-WITH DAMPER)

DRAWN BY: JG	CHK'D. BY: KR
DATE: 30 MAR 1970	DWG. NO. 4002

JOB NAME: Unaccompanied Enlisted Personnel Housing
LOCATION: Camp Lejeune, NC
ARCHITECT: J. N. Pease Associates
ENGINEER: J. N. Pease Associates
CONTRACTOR: Ramsey Air Conditioning, Inc.

SUBMITTED BY:
Hoffman & Hoffman, Inc.
22-1116R

Par. 2.2.1
K. Diffusers Registers Grilles
Par. 5.5

FACET-AIRE I
FACET-AIRE II

FOR FAN COIL UNITS

SL.

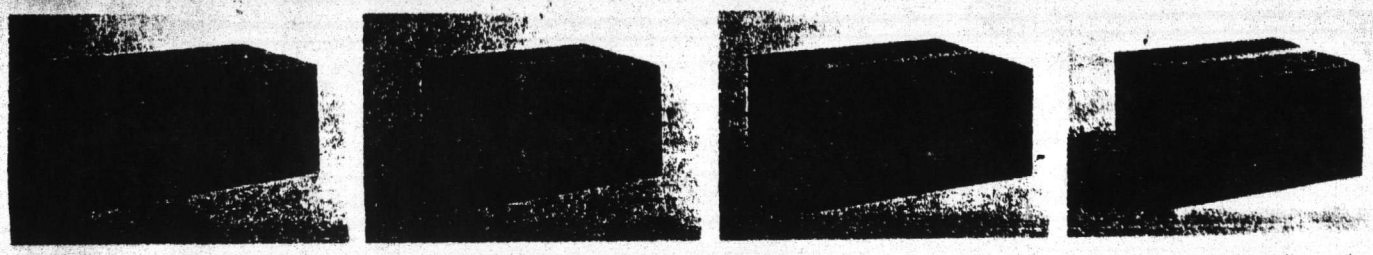

Filters shipped in color-coded display cartons.

Each Facet-Aire I and Facet-Aire II high-capacity filter has four distinct air-cleaning properties.

First, the blue entering face of the filter media catches large particles without face loading. The blue side of the filter is always on the upstream side, insuring proper installation.

Next, the interior body glass configuration retains medium-sized particulate. The media pattern is electronically programmed to provide gradient density for greater dust-holding capacity.

Then, the densely programmed backing holds fine particles, providing a final polish to the air.

Finally, throughout the filter media the glass to adhesive ratio is carefully balanced. This balance provides an optimum ratio between longevity (dust held) and arrestance (gravimetric efficiency).

Test data

Facet supports the ASHRAE test methods as the professionally accepted standards for the air filter industry, and accordingly offers the following ASHRAE arrestance data for Facet-Aire filters:

	1	2
*Air velocity	350 FPM	350 FPM
Initial pressure drop	.07 WG	.09 WG
Final pressure drop	.50 WG	.50 WG
Average synthetic dust weight arrestance	72%	83.5%
Dust holding capacity	55.9 gms/sq ft	68.9 gms/sq ft

*Filters rated for performance to 500 FPM

Facet

Facet Enterprises, Inc.
General Products Division
865 Mt. Prospect Avenue
Newark, New Jersey 07104
Phone: 201-481-1111
Twx: 710-995-4522

Facet Enterprises, Inc.
General Products Division
16422 Gentry Lane
Huntington Beach, Calif. 92647
Phone: 714-846-7735

Facet Enterprises, Inc.
General Products Division
1474 W. Hubbard Street
Chicago, Illinois 60622
Phone: 312-666-2331
Twx: 910-221-2223

Facet Enterprises, Inc.
General Products Division
U.S. Hwy #1 Bypass S.
P.O. Box 1637
Henderson, N. Carolina 2
Phone: 919-492-1141
Twx: 510-923-1245

(Outside N.C. toll-free 800/334-6659)

All filter units classified by Underwriters Laboratories, Inc. as to flammability only class 2, 377A, classified building materials index.

Member ASHRAE

Associate Member

NHAW

AIR CONDITIONING AND REFRIGERATION WHOLESALERS A·R·W

Par. 2.2.1
L. Filters
Par. 3.3

Par. 2.2.1
m. Values.
Par 6.2
6.2.4

Federal Specification Gate Valves

125 WSP—200 WOG

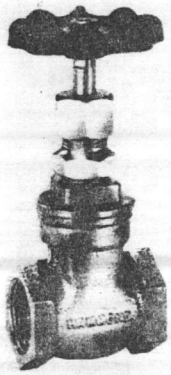

609
Bronze solid wedge disc gate valve, inserted bonnet—NRS, screwed ends. Meets Federal Specification WW-V-54, Type I, Class A.

125 WSP—200 WOG

690
Bronze solid wedge disc gate valve, inserted bonnet—rising stem, screwed ends. Sizes ¼" thru 3." Federal Specification WW-V-54, Type II, Class A.

These Hammond bronze gate valves are designed to meet the needs of commercial and light industrial applications. They meet minimum Federal specifications and have pressure-containing parts of ASTM B-62 bronze alloy. All are rated at 125 WSP—200 WOG, non-shock.

BRONZE GATE VALVES

FEDERAL SPECIFICATIONS

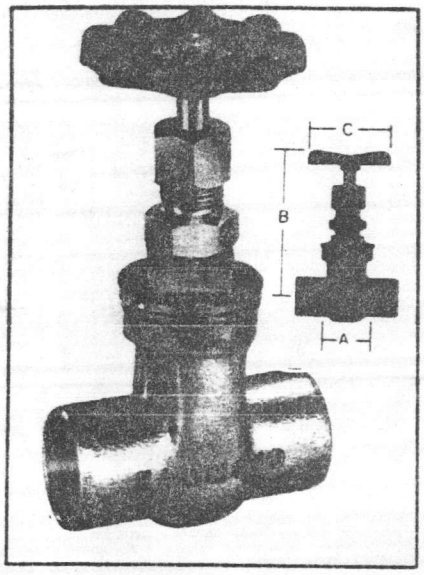

Fig. 613

125 LB. WSP (353°F.), 200 LB. WOG (150°F.), NON-SHOCK; SOLID DISC, NON-RISING STEM, SOLDER ENDS.

Companion valve to the 609, but for copper tube installation. Has non-rising stem, surpasses minimum Federal Specifications. Features include silicon bronze stem, gland follower, heavy-duty bronze alloy body, aluminum ID plate and cast aluminum handwheel. Available in 10 sizes from 3/8" to 4" (see chart below). It meets Fed. Spec. WW-V-54, Type 1, Class A for light commercial and multiple unit residential projects.

Size	3/8	1/2	3/4	1	1 1/4	1 1/2	2	2 1/2	3	4
A	1 1/4	13/16	29/32	31/32	1 3/16	1 1/4	1 7/16	1 13/16	2 3/16	2 9/16
B	3 21/32	3 3/4	4 13/32	5 1/32	5 19/32	6 1/16	7 7/16	9 21/32	11 5/8	13
C	1 3/4	2 1/8	2 13/32	2 3/4	3	3 1/4	4 1/32	4 3/4	5 1/4	6

*Have Malleable Iron Handwheels

Fig. 692

125 LB. WSP (353°F.), 200 LB. WOG (150°F.), NON-SHOCK; SOLID DISC, NON-RISING STEM, DRAINABLE, SOLDER ENDS

Same performance features as 613, but drainable. Meets Federal Specifications. Available in 3 sizes: 1/2", 3/4", 1".

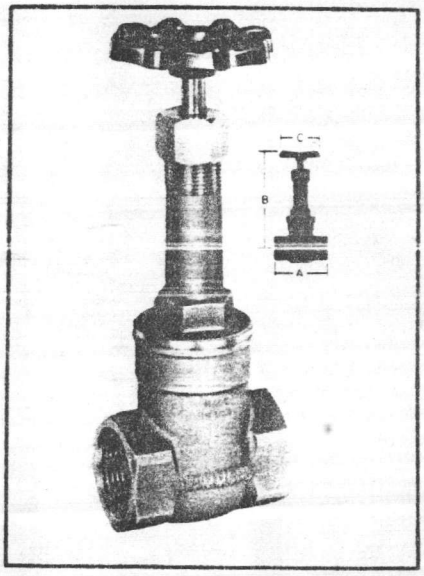

Fig. 690

125 LB. WSP (353°F.), 200 LB. WOG (150°F.), NON-SHOCK; SOLID DISC, RISING STEM, SCREWED ENDS

The ideal rising stem, screwed end valve for commercial and light industrial applications. Available in 8 sizes from 1/4" to 2". Features include a silicon bronze stem, deep stuffing box, gland follower, Teflon-asbestos packing, ASTM B-62 bronze alloy body, full port openings, aluminum ID plate, and cast aluminum handwheel. May be repacked under pressure. Meets latest Federal Specification WW-V-54, Type 11, Class A. Refer to chart below for dimensions.

Size	1/4	3/8	1/2	3/4	1	1 1/4	1 1/2	2
A	1 29/32	1 29/32	2 11/32	2 1/2	2 13/16	3 5/32	3 5/16	3 11/16
B	4 31/32	4 31/32	4 17/32	6 11/16	8	9 17/32	10 3/4	12 7/8
C	2 1/8	2 1/8	2 1/8	2 3/4	3	3 23/32	4 1/32	4 1/2

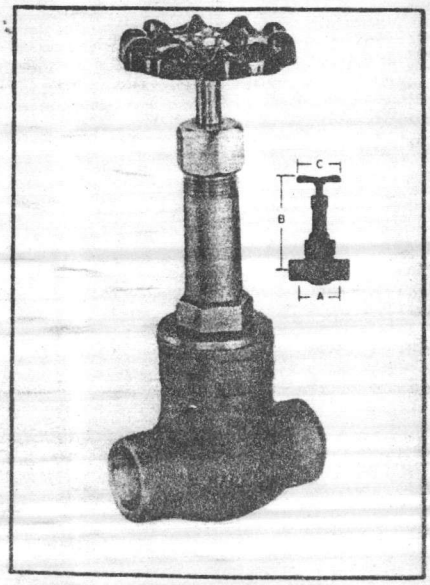

Fig. 691

125 LB. WSP (353°F.), 200 LB. WOG (150°F.), NON-SHOCK; SOLID DISC, RISING STEM, SOLDER ENDS

The quality rising stem gate valve for copper tube installations. Ends designed for quick, perfect seal soldering. Ideal for the same applications as the Fig. No. 690. The 691 features, including the ease of repacking under pressure, assure long life and serviceability. These features include a silicon bronze stem, deep stuffing box, gland follower, Teflon asbestos packing, ASTM B-62 alloy heavy-duty bronze body, full port openings, aluminum ID plate, and cast aluminum handwheel. Meets latest issue Federal Specification WW-V-54, Type 11, Class A. Sizes are from 3/8" through 2". The chart below gives dimensions.

Size	3/8	1/2	3/4	1	1 1/4	1 1/2	2
A	7/8	3/4	1 1/8	1 1/4	1 7/16	1 5/8	1 13/16
B	4 31/32	4 17/32	6 11/16	8	9 17/32	10 1/4	12 7/8
C	2 1/8	2 1/8	2 3/4	3	3 23/32	4 1/32	4 1/2

Par 2.2.1 m. Values.

Par. 6.2.1

IR326

250 Lb. Iron Body Bronze Trim
Solid Wedge Disc, NRS Gate Valve
Flanged Ends

10-7-81

RATING
250 Lbs. W.S.P. 450°F
500 Lb. W.O.G.
Non-Shock

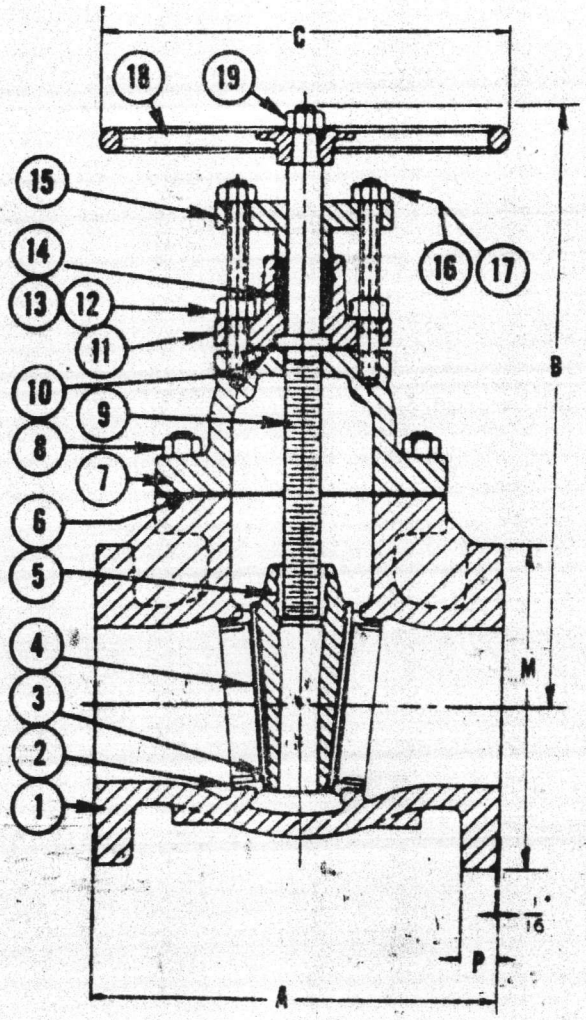

DIMENSIONS IN INCHES

SIZE	A	B	C	M	P
2	8-1/2	12-3/8	8	6-1/2	7/8
2-1/2	9-1/2	14-1/4	9	7-1/2	1
3	11-1/8	15-5/8	10	8-1/4	1-1/8
4	12	18-5/16	12	10	1-1/4

SIZE	A	B	C	M	P
5	15	21-5/16	14	11	1-3/8
6	15-7/8	23-5/8	16	12-1/2	1-7/16
8	16-1/2	28-3/4	20	15	1-5/8

MATERIAL SPECIFICATIONS

1	Body	Iron	ASTM A-126 CL B
2	Seat Ring	Bronze	ASTM B-61
3	Disc Ring 4" Up	Bronze	ASTM B-61
4	Disc 2"-3"	Bronze	ASTM B-61
	4" Up	Iron	ASTM A-126 CL B
5	Disc Bushing 4" Up	Bronze	ASTM B-62
6	Gasket	Asbestos	
7	Bonnet	Iron	ASTM A-126 CL B
8	Body-Bonnet Bolt & Nut	Steel	ASTM A-307 GR B
9	Stem	Bronze	ASTM B-584 Alloy 864

10	Gasket	Asbestos	
11	Stuffing Box	Iron	ASTM A-126 CL B
12	Stuffing Box Stud Nut	Steel	ASTM A-307 GR B
13	Stuffing Box Stud	Steel	ASTM A-575 1015-1023
14	Packing	Graphited Asbestos	
15	Gland	Iron	ASTM A-126 CL B
16	Gland Stud Nut	Brass Rod	ASTM B-16
17	Gland Stud (Zinc Plated)	Steel	ASTM 575 GR 1015-1023
18	Handwheel	Malleable Iron	ASTM A-47 GR 32510
19	Nut	Steel	ASTM A-307 GR B

Par. 2.2.1
m. Values.
Par. 6.2.1

CONDEC **Hammond Flow Control**

Hammond Valve Corporation
A Condec Company
1844 Summer Street
Hammond, IN 46320

HAMMOND
BUTTERFLY VALVES

3800 Series Wafer
200 WOG Locking Handle

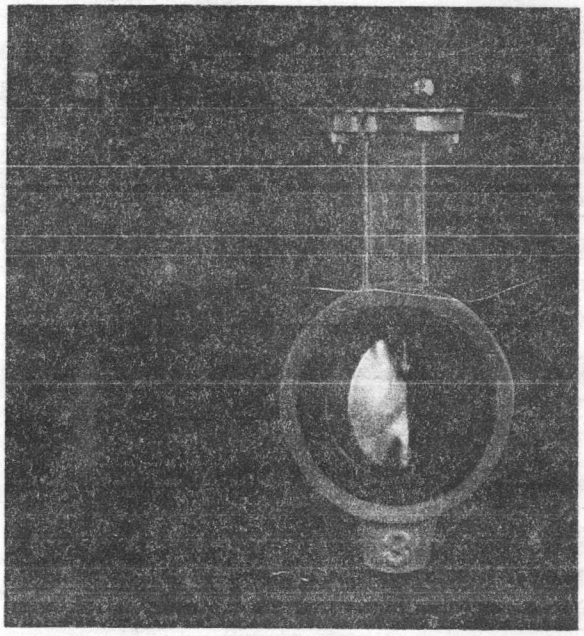

DIMENSIONS

SIZE	A	B	C	D	E	F	G	H	J	K
2	1.97	1.70	1.62	5.50	6.39	8.89	0.500	0.375	3.87	8.00
2½	2.35	1.81	1.75	6.25	7.14	10.01	0.500	0.375	4.25	8.00
3	2.95	1.81	1.75	6.25	7.14	10.76	0.500	0.375	5.00	8.00
4	3.82	2.08	2.00	7.00	8.14	12.23	0.625	0.500	6.06	12.00
5	4.87	2.20	2.12	7.50	8.64	13.26	0.750	0.562	7.62	12.00
6	5.89	2.20	2.12	8.00	9.14	14.27	0.875	0.688	8.50	12.00
8	7.73	2.50	2.41	9.50	10.78	17.09	1.125	8.75	10.75	15.00
10	9.83	2.82	2.75	10.75	12.39	20.14	1.250	1.000	13.12	15.00
12	11.82	3.10	3.00	12.25	13.89	23.10	1.500	1.125	15.62	15.00

SIZE	T	U	V	W
2	3.00	0.328	4	2.25
2½	3.00	0.328	4	2.25
3	3.00	0.328	4	2.25
4	3.50	0.390	4	2.75
5	3.50	0.390	4	2.75
6	3.50	0.390	4	2.75
8	3.87	0.390	4	3.12
10	3.87	0.390	4	3.12
12	3.87	0.390	4	3.12

Note: All dimensions are in inches.

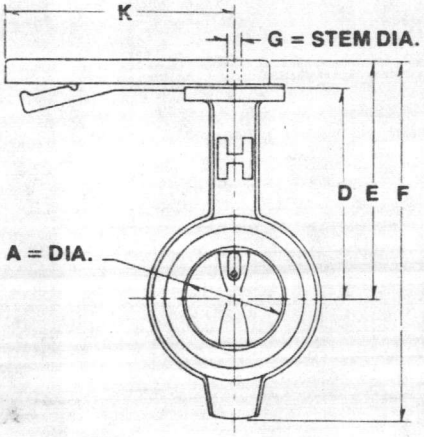

FIGURE NUMBER DESIGNATIONS

Fig. No.	Body	Disc	Stem	Seat & Seals	Handle
3800	Cast Iron	Nickle Plt. D.I.	#416 S.S.	EPT	Ductile Iron
3801	Cast Iron	Nickle Plt. D.I.	#416 S.S.	BUNA N	Ductile Iron
3802	Cast Iron	#316 S.S.	#316 S.S.	EPT	Ductile Iron
3803	Cast Iron	#316 S.S.	#316 S.S.	BUNA N	Ductile Iron
3804	Cast Iron	Bronze	#416 S.S.	EPT	Ductile Iron
3805	Cast Iron	Bronze	#416 S.S.	BUNA N	Ductile Iron

Par. 2.2.1
m. Valves.
Par. 6.2.4

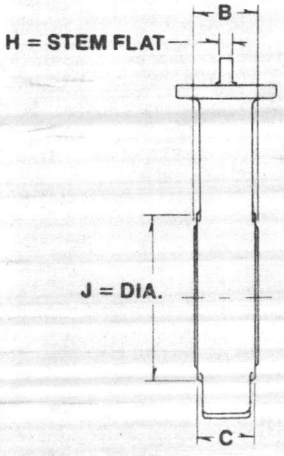

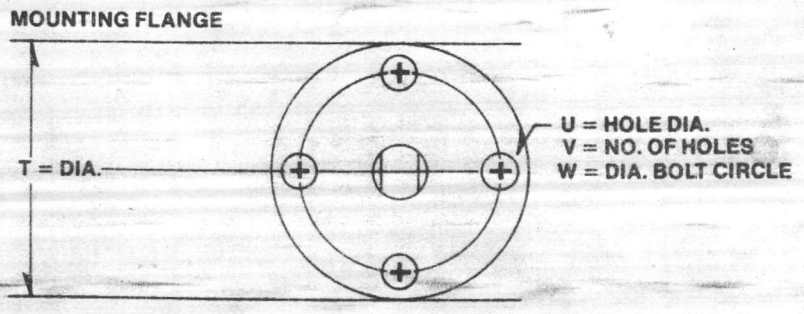

IR1124

125 Lb. Iron Body
Bronze Trim
Swing Check Valve
Flanged Ends

10-7-81

RATING

2"-12" 125 Lb. W.S.P.
Saturated, 200 Lb. W.O.G.
Non-Shock, 14" 150 Lb. W.O.G.
Non-Shock
Warning - Do not use for reciprocating air compressor service

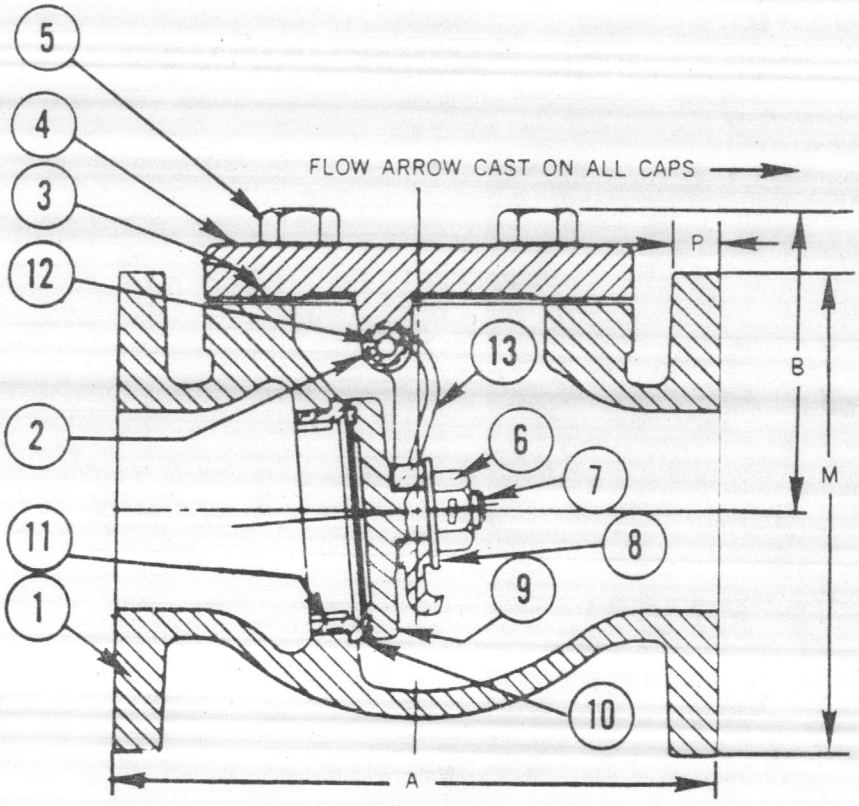

DIMENSIONS IN INCHES

SIZE	A	B	M	P
2	8	3-13/32	6	5/8
2-1/2	8-1/2	4-3/32	7	11/16
3	9-1/2	4-1/2	7-1/2	3/4
3-1/2	10-1/2	5-1/16	8-1/2	13/16
4	11-1/2	5-5/16	9	15/16
5	13	6-5/16	10	15/16

SIZE	A	B	M	P
6	14	6-27/32	11	1
8	19-1/2	8-5/16	13-1/2	1-1/8
10	24-1/2	10-9/32	16	1-3/16
12	27-1/2	11-15/16	19	1-1/4
14	31	13-13/16	21	1-3/8

MATERIAL SPECIFICATIONS

1	Body		Iron	ASTM A-126 CL B
2	Set Screw		Mild Carbon Steel	
3	Gasket		Asbestos	
4	Cap		Iron	ASTM A-126 CL B
5	Body Cap Screw		Steel	ASTM A-307 GR B
6	Disc Stud Nut		Steel	ASTM A-307 GR B
7	Disc Stud	5" Up	Steel	ASTM A-575 GR 1015-1023
8	Disc Washer	2"-6"	Mild Carbon Steel	
		8"	Steel	ASTM A-575 GR 1020
		10"-14"	Steel	ASTM A-284 GR D

9	Disc	2"-4"	Bronze	ASTM B-61
		5" Up	Iron	ASTM A-126 CL B
10	Disc Ring	5" Up	Bronze	ASTM B-61
11	Seat Ring		Bronze	ASTM B-61
12	Strap Pin		Silicon Brass Rod	ASTM B-371 Alloy 697
13	Strap		Iron w/3% Nickel	ASTM A-126 CL B (Mod)

CONDEC **Hammond Flow Control**

Hammond Valve Corporation
A Condec Company
1844 Summer Street
Hammond, IN 46320
Tel. (219) 931-3200

IR1140

125 Lb. Iron Body
Bronze Trim, Solid Wedge Disc
Rising Stem, O.S.&Y.
Gate Valve, Flanged Ends

10-7-81

RATING
2"-12" 125 Lb. W.S.P., Saturated
200 Lb. W.O.G. Non-Shock
14"-24" 100 Lb. W.S.P., Saturated
150 Lb. W.O.G. Non-Shock

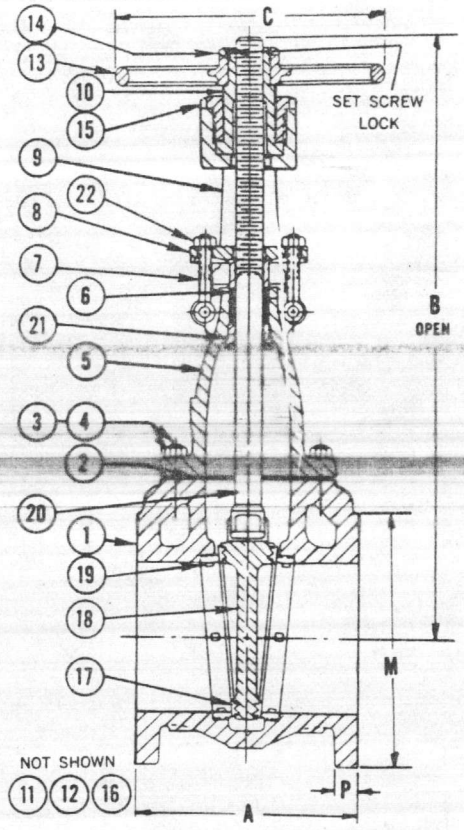

DIMENSIONS IN INCHES

SIZE	A	B	C	M	P
2*	7	15-1/8	8	6	5/8
2-1/2*	7-1/2	16-9/16	8	7	11/16
3*	8	18-7/8	9	7-1/2	3/4
3-1/2*	8-1/2	21-1/2	8-1/2	8-1/2	13/16
4*	9	23-3/4	10	9	15/16
5	10	27-7/8	12	10	15/16
6*	10-1/2	32-1/2	14	11	1

SIZE	A	B	C	M	P
8*	11-1/2	40-7/8	14	13-1/2	1-1/8
10*	13	48-7/8	16	16	1-3/16
12*	14	57-5/8	20	19	1-1/4
14	15	66	22	21	1-3/8
16	16	74-1/4	22	23-1/2	1-7/16
18	17	81-1/2	24	25	1-5/8
20	18	94	27	27-1/2	1-11/16
24	20	105-1/4	30	32	1-7/8

*INTEGRAL BONNET & YOKE CONSTRUCTION

MATERIAL SPECIFICATIONS

1	Body 2"-16"	Iron	ASTM A-126 CL B
	18"-24"	Iron	ASTM A-126 CL C
2	Gasket	Asbestos	
3	Bonnet Bolt 2"-16"	Steel	ASTM A-307 GR B
	18"-24"	Carb. Steel	100,00 PSI Tensile
4	Bonnet Bolt Nut 2"-16"	Steel	ASTM A-307 GR B
	18"-24"	Steel	ASTM A-194 GR 2H
5	Bonnet 2"-16"	Iron	ASTM A-126 CL B
	18"-24"	Iron	ASTM A-126 CL C
6	Packing	Graphited Asbestos	
7	Gland Eyebolt 2"-18"	Mild Carb. Steel	
	20"-24"	Forged Steel	ASTM A-235 CL A
8	Gland 2"-16"	Iron	ASTM A-126 CL B
	18'-24"	Iron	ASTM A-126 CL C
9	Yoke Arms 5"-14" Up	Iron	ASTM A-126 CL B
10	Yoke Nut	Bronze	ASTM B-584 Alloy 864
11	Yoke Arm Bolt 5"-14"		
	16"-18"	Steel	ASTM A-307 GR B
12	Yoke Arm Bolt Nut 5"		
	14"-16"-18"	Steel	ASTM A-307 GR B

13	Handwheel 2"-12"	Malleable Iron	ASTM A-47 GR 32510
	14"-18"	Ductile Iron	ASTM A-536 GR 65-45-12
	20"-24"	Carbon Steel	ASTM A-216 GR WCB
14	Wheel Nut	Malleable Iron	ASTM A-47 GR 32510
15	Yoke Nut Retain. Nut 2"		
	4"-6"-8"-10"-12"	Iron	ASTM A-126 CL B
16	Yoke Arm Capscrew 5"		
	14"-16"	Steel	ASTM A-108 GR 1018 or 1020
17	Disc Ring 3"		
	4" Up	Bronze	ASTM B-62
18	Disc		
	2"-2½"-3½"	Bronze	ASTM B-62
	3", 4"-16"	Iron	ASTM A-126 CL B
	18"-24"	Iron	ASTM A-126 CL C
19	Seat Ring	Bronze	ASTM B-62
20	Stem	Bronze	ASTM B-138 Alloy 675
21	Backseat Bushing 5"-		
	10" Up	Bronze	ASTM B-62
22	Gland Eyebolt Nut	Brass Rod	ASTM B-16

Par. 2.2.1
m. Valves.
Par. 6.2.1

CONDEC **Hammond Flow Control**

Hammond Valve Corporation
A Condec Company
1844 Summer Street
Hammond, IN 46320

IR1124

125 Lb. Iron Body
Bronze Trim
Swing Check Valve
Flanged Ends

10-7-81

RATING

2"-12" 125 Lb. W.S.P.
Saturated, 200 Lb. W.O.G.
Non-Shock, 14" 150 Lb. W.O.G.
Non-Shock
Warning - Do not use for reciprocating air compressor service

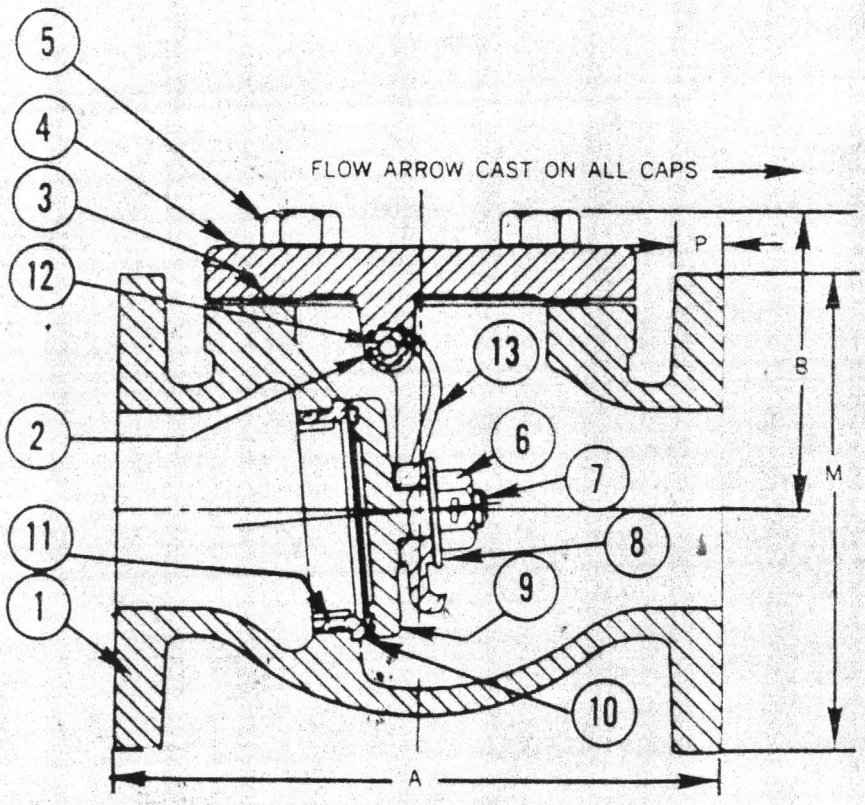

DIMENSIONS IN INCHES

SIZE	A	B	M	P
2	8	3-13/32	6	5/8
2-1/2	8-1/2	4-3/32	7	11/16
3	9-1/2	4-1/2	7-1/2	3/4
3-1/2	10-1/2	5-1/16	8-1/2	13/16
4	11-1/2	5-5/16	9	15/16
5	13	6-5/16	10	15/16

SIZE	A	B	M	P
6	14	6-27/32	11	1
8	19-1/2	8-5/16	13-1/2	1-1/8
10	24-1/2	10-9/32	16	1-3/16
12	27-1/2	11-15/16	19	1-1/4
14	31	13-13/16	21	1-3/8

MATERIAL SPECIFICATIONS

1	Body		Iron	ASTM A-126 CL B
2	Set Screw		Mild Carbon Steel	
3	Gasket		Asbestos	
4	Cap		Iron	ASTM A-126 CL B
5	Body Cap Screw		Steel	ASTM A-307 GR B
6	Disc Stud Nut		Steel	ASTM A-307 GR B
7	Disc Stud	5" Up	Steel	ASTM A-575 GR 1015-1023
8	Disc Washer	2"-6"	Mild Carbon Steel	
		8"	Steel	ASTM A-575 GR 1020
		10"-14"	Steel	ASTM A-284 GR D

9	Disc	2"-4"	Bronze	ASTM B-61
		5" Up	Iron	ASTM A-126 CL B
10	Disc Ring	5" Up	Bronze	ASTM B-61
11	Seat Ring		Bronze	ASTM B-61
12	Strap Pin		Silicon Brass Rod	ASTM B-371 Alloy 697
13	Strap		Iron w/3% Nickel	ASTM A-126 CL B (Mod)

Par 2.2.1
m. Valves
Par. 6.2.3

CONDEC Hammond Flow Control

Hammond Valve Corporation
A Condec Company
1844 Summer Street
Hammond, IN 46320
Tel. (219) 931-2990

HAMMOND
1844 Summer Street
Hammond, Indiana 46320
(219) 931-3200
A DIVISION OF CONVAL CORPORATION
A SUBSIDIARY OF CONNER CORPORATION

Certificate

This is to certify that the following Hammond valves meet the corresponding Federal Specifications:

Valve No.	Latest Issue of Federal Specification	Description	Type and Class		Designation
IB423	WW-V-51	150 lb. Globe (soldered-ends)			
IB413	WW-V-51	150 lb. Globe	I	B	–
IB440	WW-V-51	125 lb. Globe	I	A	–
IB454	WW-V-51	150 lb. Angle	II	B	–
IB463	WW-V-51	125 lb. Angle	II	A	–
IB617	WW-V-54	125 lb. Gate	II	A	–
IB629	WW-V-54	150 lb. Gate	II	B	–
IB631	WW-V-54	150 lb. Gate	III	B	–
IB635	WW-V-54	125 lb. Gate (solder ends)	II	A	–
IB640	WW-V-54	125 lb. Gate	II	A	–
IB641	WW-V-54	150 lb. Gate	II	B	–
IB643	WW-V-54	125 lb. Gate	III	A	–
IB645	WW-V-54	125 lb. Gate	I	A	–
IB646	WW-V-54	150 lb. Gate	I	B	–
IB647	WW-V-54	125 lb. Gate (solder ends)	I	A	–
IB648	WW-V-54	150 lb. Gate (solder ends)	II	B	–
IB654	WW-V-54	200 lb. Gate	II	C	–
IB656	WW-V-54	200 lb. Gate	I	C	–
IB940	WW-V-51	125 lb. Swing Check	IV	A	–
IB941	WW-V-51	125 lb. Swing Check (solder ends)	IV	A	–
IB946	WW-V-51	150 lb. Swing Check	IV	B	–
* IB949	WW-V-51	200 lb. Swing Check	IV	C	–
IR1140	WW-V-58	125 lb. Gate	I	A	OF
IR1138	WW-V-58	125 lb. Gate	I	A	NF
IR1137	WW-V-58	125 lb. Gate	I	A	NS
[illegible]	[illegible]	[illegible]	I	[illegible]	[illegible]
IR330	WW-V-58	250 lb. Gate	I	B	OF

* 3/4" To 3" only

I hereby declare that all statements made and all information contained herein are true and correct.
Subscribed and sworn to before me

on September 10, 1984

Jacqueline Lee Edington
Notary Public, Lake County

HAMMOND VALVE CORPORATION

By W Durell

Par. 2.2.1
m. Valves.
Par. 6.2
6.2.4

HAMMOND
MARK OF QUALITY IN VALVES
VALVE CORPORATION
HAMMOND, INDIANA 46320

A DIVISION OF CONVAL CORPORATION A SUBSIDIARY OF CONDEC CORPORATION

Certificate

This is to certify that the following Hammond valves meet the corresponding Federal Specifications:

Valve No.	Latest Issue of Federal Specification	Description	Type & Class
418	WW-V-51	125 # Globe (solder ends)	I A
609	WW-V-54	125 # Gate	I A
613	WW-V-54	125 # Gate (solder ends)	I A
690	WW-V-54	125 # Gate	II A
691	WW-V-54	125 # Gate (solder ends)	II A
806	WW-V-35A	125 # Ball Valve (solder ends)	II A*
807	WW-V-35A	125 # BALL VALVE (SCREWED ENDS)	II A*
904	WW-V-51	125 # Swing Check	IV A
912	WW-V-51	125 # Swing Check (solder ends)	IV A

* STYLE 3

I hereby declare that all statements made and all information contained herein are true and correct.

Subscribed and sworn to before me.

on September 10, 1984

Jacqueline Lee Elkington
Notary Public, Lake County

HAMMOND VALVE CORPORATION

By W Durell

Par. 2.2.1
m. Valves.
Par 6.2
6.2.4

WELDBEND CORPORATION

7171 WEST 65TH STREET • CHICAGO, ILL. 60638

AREA 312
582 - 3500

Noland Co.
Mr. Dave Dilwy
P.O. Box 3069
Kinston, NC 28501

RE: Unaccompanied Enlisted Personnel Housing
82-B2244
Camp Lejeune, NC

Gentlemen:

This will attest that WELDBEND fittings will conform to ASTM A234, WPB specifications and to ANSI B16.9 requirements.

This will attest that WELDBEND flanges will conform to ANSI B16.5 and to ASTM A105-83 specifications.

This will further attest that based upon industry standards and specifications, including those of the committee A1 on steel of the American Society for Testing and Materials, WELDBEND CORPORATION is the manufacturer of all fittings and flanges sold and shipped on the above job.

All material is sold under terms and conditions as outlined in our catalog.

Performance of this material is guaranteed by WELDBEND CORPORATION as outlined by our warranty and is covered to the extent of $5,000,000.00 under Products Liability Policy #221-00-044611 of the Employers Insurance of Wausau of Wausau, Wisconsin.

Sincerely,

WELDBEND CORPORATION

George J. Rothballer
Vice President

Subscribed and sworn to before me this 10th day of September, 19 84 :

Notary Public

My Commission Expires 1-10-88

Par 2.2.1
n. Pipe and Fittings
Par 6.1
6.1.5

LTV Jones & Laughlin

QUALITY CONTROL - METALLURGICAL
BASIC STEEL - EASTERN DIVISION

Sep. 12, 1984

Noland Co.
P. O. Box 3069
Kinston, N. C. 28501

CERTIFICATE OF COMPLIANCE

This is to certify that Continuous Weld pipe, 1/4" thru 4" Black or Galvanized, Standard or Extra Strong, so ordered by you to ASTM A120/ASTM A53 Type F, and Electric Weld pipe 4-½" O.D. thru 12-3/4" O.D. Standard or Extra Strong, Black or Galvanized, so ordered by you to ASTM A53 Grade B, was produced in the United States of America and tested in accordance with all the requirements of the above stated specifications.

D. E. Klesser
D. E. Klesser
Quality Control Supervisor
Welded Tube

Sworn to and subscribed before me

On this 12th day of September 1984 A. D.

James V. LaGrosse Jr.
Notary Public

:jvl

JAMES V. LaGROSSE, JR., NOTARY PUBLIC
ALIQUIPPA BORO, BEAVER COUNTY
MY COMMISSION EXPIRES FEB. 15, 1986
Member, Pennsylvania Association of Notaries

Par 2.2.1
N. Pipe and Fittings
Par 6.1
6.1.5

CERRO COPPER PRODUCTS CO.
A member of The Marmon Group of companies
P.O. Box 681
East St. Louis, Illinois 62202
618/337-6000

13 April, 1984

Noland Co.
2700 Warwick Ave.
Newport News, VA 23607

Attn: Glen Gray

Gentlemen:

We hereby certify that our Alloy C12200 Seamless Copper Water Tube Types K & L supplied for your order number 26011E 76635 complies with the applicable requirements of ASTM Specification B-88 and Federal Specification WW-T-799.

Yours very truly,

CERRO COPPER PRODUCTS CO.
A Member of The Marmon Group of Co.

John Schuster
Laboratory Director

JS/jaw

STATE OF ILLINOIS } SS
County of St. Clair }

Subscribed and sworn to before me this 13th day of April, A.D., 1984.

Donald L. Oliver

Par. 2.2.1
n. Pipe and Fittings
Par 6.1
6.1.5

1

MUELLER BRASS CO. PORT HURON, MICHIGAN 48060

Date October 1, 1984

Customer Ncland Company
Street No. P. O. Box 3069
City & State Kinston, NC 28501
Order No.
Attention David Dildy

Contractor Ramsey Air Conditioning
Address
Contract No.
Job Description UEPH #82B2244
Location Camp Johnson, Jacksonville, NC

PRODUCT SPECIFICATIONS
CERTIFICATION OF CONFORMANCE

Mueller Brass products are manufactured in conformance to the latest revisions of the following recognized industry standards.

- [x] WROT COPPER AND COPPER ALLOY SOLDER JOINT PRESSURE FITTINGS — To ANSI B16.22.
- [ ] CAST COPPER ALLOY SOLDER JOINT PRESSURE FITTINGS — To ANSI B16.18.
- [ ] CAST COPPER ALLOY FITTINGS FOR FLARED COPPER TUBES — To ANSI B16.26.
- [ ] STREAMLINE COPPER WATER TUBE — TYPES K, L & M — To ASTM B88 and WWT-799.
- [ ] REFRIGERATION FLARE-TYPE FITTINGS — To SAEJ513, and Military Standards MS-16993, MS-35867 thru MS-35873 inclusive, MS-35919 and MS-35926.
- [ ] STREAMLINE COPPER REFRIGERATION SERVICE TUBE — To ASTM B280, and WWT-775.
- [ ] STREAMLINE NITROGENIZED ACR HARD DRAWN COPPER TUBE — To ASTM B88 - Type L, in accordance with ASTM B280.
- [ ] OXYGEN SERVICE TUBE — To ASTM B88, Types K and L — hard drawn lengths only — in accordance to CDA cleanliness specifications and NFPA 56F, Seamless Copper Tube cleaned for Oxygen Gas Service.
- [ ] WROT COPPER AND COPPER ALLOY SOLDER JOINT DRAINAGE FITTINGS - DWV — To ANSI B16.29.
- [ ] CAST COPPER ALLOY SOLDER JOINT DRAINAGE FITTINGS - DWV — To ANSI B16.23.
- [ ] STREAMLINE COPPER DRAINAGE TUBE - DWV — To ASTM B306.
- [ ] COPPER PIPE — To ASTM B42.
- [ ] RED BRASS PIPE — To ASTM B43 — Can be supplied in hard temper.

Par 2.2.1
n. Pipe and Fittings
Par 6.1
6.1.5

Yours truly,
MUELLER BRASS CO.
By James O. Hinson

Subscribed and sworn to before me this 2nd day of October 1984

Kathryn L Conk (Pyle)
Notary My Commission Expires May 6, 1987

STANLEY G. FLAGG & CO., INC.

THREADED PIPE FITTINGS:
MALLEABLE IRON
CAST IRON
BRONZE

MANUFACTURERS SINCE FF EIGHTEEN FIFTY-FOUR

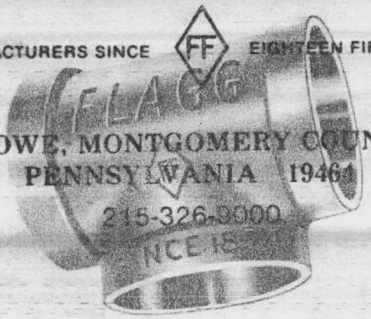

THREADLESS PIPE FITTINGS:
BRONZE FLAGG-FLOW
CAST BRONZE SOLDER
WROUGHT COPPER SOLDER

September 10, 1984

Noland Company
P.O. Box 3069
Kinston, North Carolina 28501

Attention: David Dildy

For: Unaccompanied Enlisted Personnel Housing
#82-B-22-44
Camp Lejeune, North Carolina

Subject: CERTIFICATE OF COMPLIANCE

Dear Mr. Dildy,

This is to certify that the fittings manufactured and/or supplied by Stanley G. Flagg & Company, Inc., comply with and conform to specifications as indicated below:

STANDARD MALLEABLE IRON
Fed. Spec. W.W.-P-521
ANSI B 16.3 (Dimensions)
A.S.T.M. A-197 (Chemical and Physical Peoperties)
A.S.T.M. A-153 (Galvanizing)
ANSI B-2.1 (Pipe Threads)

EH MALLEABLE IRON
ANSI B 16.3 (Dimensions)
A.S.T.M. Std. A-197 (Chemical and Physical Properties)
A.S.T.M. A-153 (Galvanizing)
ANSI B-2.1 (Pipe Threads)

Par 2.2.1
n. Pipe and Fittings
Par 6.1
6.1.5

MEMBER apfa AMERICAN PIPE FITTINGS ASSOCIATION

a DMI company

BLACK AND GALVANIZED STANDARD STEEL NIPPLES (WELDED)
(Specifications A.S.T.M. A-120)
Standard Black and Galvanized - 1/8" thru 4"

BLACK AND GALVANIZED EXTRA HEAVY STEEL NIPPLES (WELDED)
(Specifications A.S.T.M. A-120)
Extra Black and Galvanized - 1/8" thru 4"

STANLEY G. FLAGG & COMPANY, INC.

Albert E. Schaefer
Treasurer

AES/kea

Par 2.2.1
n. Pipe and Fittings
Par 6.1
6.1.3 -

Sworn to and subscribed before
me this 10th day of Sept 1984

Kathryn E. Gosmith

Notary Public, West Pottsgrove, Montg. Co.
My Commission Expires January 6, 1986

EMPIRE TOOL & MFG. CO., INC.
P.O. BOX 928 • MANCHESTER, CONNECTICUT 06040-0928
TELEPHONE (203) 647-1431

September 12, 1984

Noland Company
410 North Heritage Street
P.O. Box 3069
Kinston, North Carolina 25801

Attention: David Dildy

Subject: Military housing #82 B2244

Dear David:

Empire pipe hangers meet manufacturers standardization society #SP-69 and #SP-58. All our hangers conform to the Federal Specification WW-H-171 which includes SP-69 and SP-58. These are specifications for material application (69) and material design (58). Refer to the copy of page #56 which I have enclosed. You will note that each hanger has a specific Government Type No.

If you need Government Type No.'s that are not listed on page 56 of our catalog, please advise and I will supply the information required.

Par 2.2.1
c. Pipe hangers and supports
Par. 6.3.1

If you have any questions, please call either Jack Harrington or myself at 800-243-4844.

Yours truly,
EMPIRE TOOL & MFG. CO.

Thomas H. Collins
Sales Manager

Original in Plumbing Submittal

THC/ec
Enclosure

SUBSCRIBED AND SWORN TO BEFORE Notarized
ME THIS 21st DAY OF SEPTEMBER 1984

Gyslenne M. Ricci
Gyslenne M. Ricci

MY COMMISSION EXPIRES MARCH 31, 1988

GALVANIZED

ADJ. STEEL CLEVIS
SIZES ¾" THRU 20" IPS

GOVT. TYPE 1
•
EMPIRE FIG. 11

STEEL DOUBLE BOLT PIPE CLAMP
SIZES 1½" THRU 24" IPS

GOVT. TYPE 3
•
EMPIRE FIG. 189

STEEL PIPE CLAMP
SIZES 1½" THRU 24" IPS

GOVT. TYPE 4
•
EMPIRE FIG. 212

ADJ. MI SWIVEL PIPE RING

SPLIT RING
SIZES ¾" THRU 8" IPS

GOVT. TYPE 6
•
EMPIRE FIG. 19

ADJ. STEEL BAND HANGER
SIZES ½" THRU 8" IPS
¾" THRU 4" TUB.

GOVT. TYPE 7
•
EMPIRE FIG. 31 AND FIG. 31CT

GALVANIZED

EXT. PIPE OR RISER CLAMP
SIZES ¾" THRU 20" IPS
½" THRU 6" TUB.

GOVT. TYPE 8
•
EMPIRE FIG. 50 AND FIG. 50CT

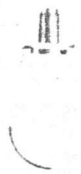

ADJ. SWIVEL RING HANGER
SIZES ½" THRU 8" IPS
½" THRU 4" TUB.

GOVT. TYPE 10
•
EMPIRE FIG. 310 AND FIG. 310CT

MI SPLIT PIPE RING
W/WO TRN BKL ADJ.
SIZES ½" THRU 8" IPS
½" THRU 4" TUB.

GOVT. TYPE 11
•
EMPIRE FIG. 45 AND FIG. 45CT

LIGHT DUTY CLEVIS HANGER
SIZES ½" THRU 4"

GOVT. TYPE 12
•
EMPIRE FIG. 110

FORGED STEEL TURNBUCKLE
SIZES ⅜" THRU 1½" ROD

GOVT. TYPE 13
•
EMPIRE FIG. 320

FORGED STEEL CLEVIS
SIZES ⅜" THRU 1½" ROD

GOVT. TYPE 14
•
EMPIRE FIG. 309

ADJ. MI TURNBUCKLE
SIZES ⅜" THRU ¾" ROD

GOVT. TYPE 15
•
EMPIRE FIG. 114

MI SOCKET ONLY FOR S SPLIT RING HGR.
SIZES ⅜" THRU ⅞" ROD

GOVT. TYPE 16
•
EMPIRE FIG. 47

FORGED STEEL WELDLESS EYE NUT
SIZES ⅜" THRU 1½" ROD

GOVT. TYPE 17
•
EMPIRE FIG. 13

STEEL CONCRETE INSERT

GOVT. TYPE 19
•
EMPIRE FIG. 81

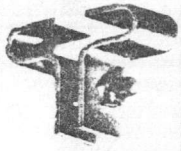

CENTER I-BEAM CLAMP

GOVT. TYPE 21
•
EMPIRE FIG. 150

WELDED ATTACHMENT
AS SHOWN OR INVERTED LESS BOLT

GOVT. TYPE 22
•
EMPIRE FIG. 66

MI OR STEEL C-CLAMP
SIZES ⅜" THRU ⅞"

GOVT. TYPE 23
•
EMPIRE FIG. 21 & 23

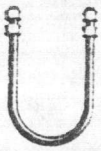

U-BOLT
SIZES ½" THRU 24" IPS

GOVT. TYPE 24
•
EMPIRE FIG. 137

COPPER PLATED

MI EXT. SPLIT RING HANGER
SIZES ⅜" THRU 4" IPS
½" THRU 3" TUB.

GOVT. TYPE 25
•
EMPIRE FIG. 41 & 41BT AND 41CT

OFFSET J-HOOK
SIZES ½" THRU 3" IPS

GOVT. TYPE 27
•
EMPIRE FIG. 146

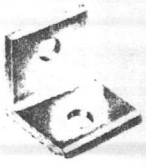

ANGLE BRACKET

GOVT. TYPE 35
•
EMPIRE FIG. 53

GALVANIZED

STEEL PIPE COVERING PROTECTION SADDLE
SIZES UP TO AND INCLUDING 10" IPS

GOVT. TYPE 40A
•
EMPIRE FIG. 1900-1905

STEEL PIPE COVERING PROTECTION SADDLE
SIZES 12" IPS AND LARGER

GOVT. TYPE 40B
•
EMPIRE FIG. 1900-1905

GALVANIZED

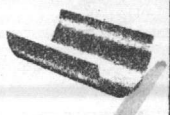

INSULATION PROTECTION SHIELD
FOR VAPOR SEALED PIPE LINES AND INSULATED COPPER TUBING SIZES ¾" THRU 12" IPS

GOVT. TYPE 41
•
EMPIRE FIG. 167

GALVANIZED

SINGLE PIPE ROLL
SIZES 1" THRU 24" IPS

GOVT. TYPE 42
•
EMPIRE FIG. 277

GALVANIZED

ADJ. ROLLER HANGER
SIZES 1" THRU 20" IPS

GOVT. TYPE 44
•
EMPIRE FIG. 272

Par. 2.2.1
o Pipe hangars & supports
Par. 6.3.1

ARMSTRONG VORTEX AIR SEPARATOR SUBMITTAL DATA

File No: 5035.955
Date: April 5, 1982
Supersedes: 5035.955
Date: Sept. 20, 1974

MODELS: VA-2 TO VA-12 LESS STRAINER
VAS-2 TO VAS-12 WITH STRAINER

CUSTOMER	CUSTOMER'S ORDER NO.	ARMSTRONG REFERENCE
RAMSEY AIR COND	0521	—

ENGINEER	JOB REFERENCE
DEWEY R. WINCHESTER	UPEH, MCB CAMP LEJEUNE, N.C.

SPECIFICATION REFERENCE	QUOTATION REFERENCE
SEC. 15801, PAGE 19, PAR. 6.3.9	—

MODEL NUMBER	MAXIMUM FLOW
VAS-5	500 USGPM

WORKING CONDITIONS

MAXIMUM WORKING PRESSURE ..... 125 psi
MAXIMUM WORKING TEMPERATURE ..... 350°F
HYDROSTATIC TEST PRESSURE ..... 200 psi

CONSTRUCTION OF VORTEX AIR SEPARATOR

Fabricated steel shell constructed according to ASMECode for Unfired Pressure Vessels.

Form U-1A Manufacturer's Data Sheet signed by N.B. Inspector provided in accordance with ASME Code for the following units ONLY: VA5 - VAS5 to VA12 - VAS12 inclusive.

Certificates are not required, and are not available, for smaller Units VA2 - VAS2 to VA4 - VAS4 inclusive.

Connections provided for :
(a) Main inlet and outlet flow
(b) Air connections for line to compression tank
(c) Drain flushing connection at bottom to eliminate dirt and sediment
(d) With strainer (✓) without strainer ( )

SPECIFICATIONS

VERTICALLY MOUNTED AIR SEPARATOR HAVING STEEL TANK WITH TANGENTIAL INLET AND OUTLET FOR SEPARATION OF AIR IN HYDRONIC SYSTEM AND TO ACT AS A SEDIMENT TRAP.

SUITABLE FOR PIPE-LINE MOUNTING.

PREPARED BY: Tom Burton

DATE: 3-23-84

Form No. 6429-E

REMARKS AND/OR ACCESSORIES

DIMENSIONS: SEE REVERSE SIDE

Par. 2.2.1
P. Air Separator Tanks
Par. 6.3.9

Armstrong PUMPS

ARMSTRONG PUMPS INC.
North Tonawanda, N. Y. 14120

DIMENSIONAL DATA - ARMSTRONG VORTEX AIR SEPARATOR

NOTES:

1. INLET AND OUTLET CONNECTIONS "A" ARE NPT FOR SIZES 2" TO 3" AND 150# A.S.A. (RF) FLANGED FOR SIZES 4" TO 12"
2. BOLT HOLES IN ALL FLANGES STRADDLE VERTICAL ℄

MAXIMUM WORKING PRESSURE
125 PSIG

MAXIMUM WORKING TEMPERATURE
350°F

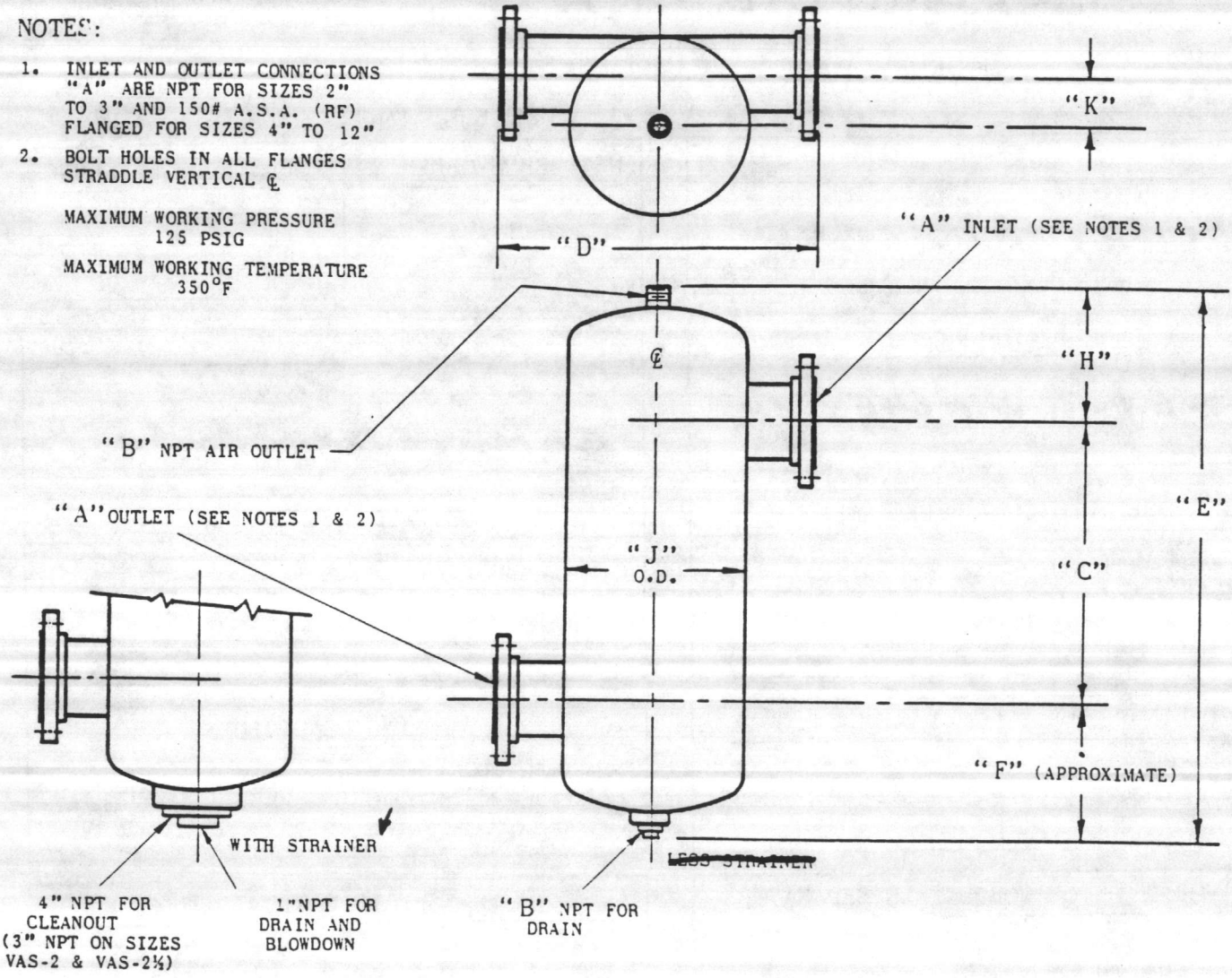

MODEL NUMBER		DIMENSIONS (IN INCHES)											MAX. FLOW USGPM LESS STR.	MAX. FLOW USGPM WITH STR.	APPROX. WEIGHT LBS.	
LESS STR.	WITH STR.	A	B	C	D	E LESS STRAINER	F LESS STRAINER	E WITH STRAINER	F WITH STRAINER	H	J	K			LESS STR.	WITH STR.
VA-2	VAS-2	2	1	6	10	18-1/2	6 1/2	19-1/4	7-1/8	6-1/8	5-13/16	1-3/4	60	60	22	25
VA-2½	VAS-2½	2½	1	7	12	18-7/8	5-7/8	19-5/8	6-3/4	6	6-7/8	1-7/8	90	90	27	30
VA-3	VAS-3	3	1	7-1/2	14	20-3/8	6-5/8	21-1/2	7-3/4	6-1/4	8-7/8	2-9/16	180	180	33	36
VA-4	VAS-4	4	1-1/2	9-1/2	18	24-1/2	7-3/4	25-1/2	8-3/4	7-1/4	11	3-1/8	310	310	65	75
~~VA-5~~	VAS-5	5	1-1/2	11	20	~~27-3/4~~	~~8-3/8~~	28-3/4	9-5/8	8-1/8	13-1/8	3-5/8	~~550~~	500	~~88~~	98
VA-6	VAS-6	6	1-1/2	12-1/2	24	31-1/4	9-5/8	32 3/8	10-3/4	9-1/8	16-3/8	4-11/16	910	725	140	150
VA-8	VAS-8	8	2	16	28	39-3/8	12	40-3/8	13	11-3/8	20-1/2	5-11/16	1850	1250	270	280
VA-10	VAS-10	10	2	20	32	46-7/8	13-3/4	47-7/8	14-3/4	13-1/8	24-1/2	6-5/8	3550	2000	390	400
VA-12	VAS-12	12	2	26	38	57-3/8	16	58-3/8	17	15-3/8	30	8-5/8	4700	2800	830	1030

1 - Lot FLEX-HOSE stainless steel flexible pump connectors.

Submitted under Section 15801, page 15801-19, paragraph 6.3.7.

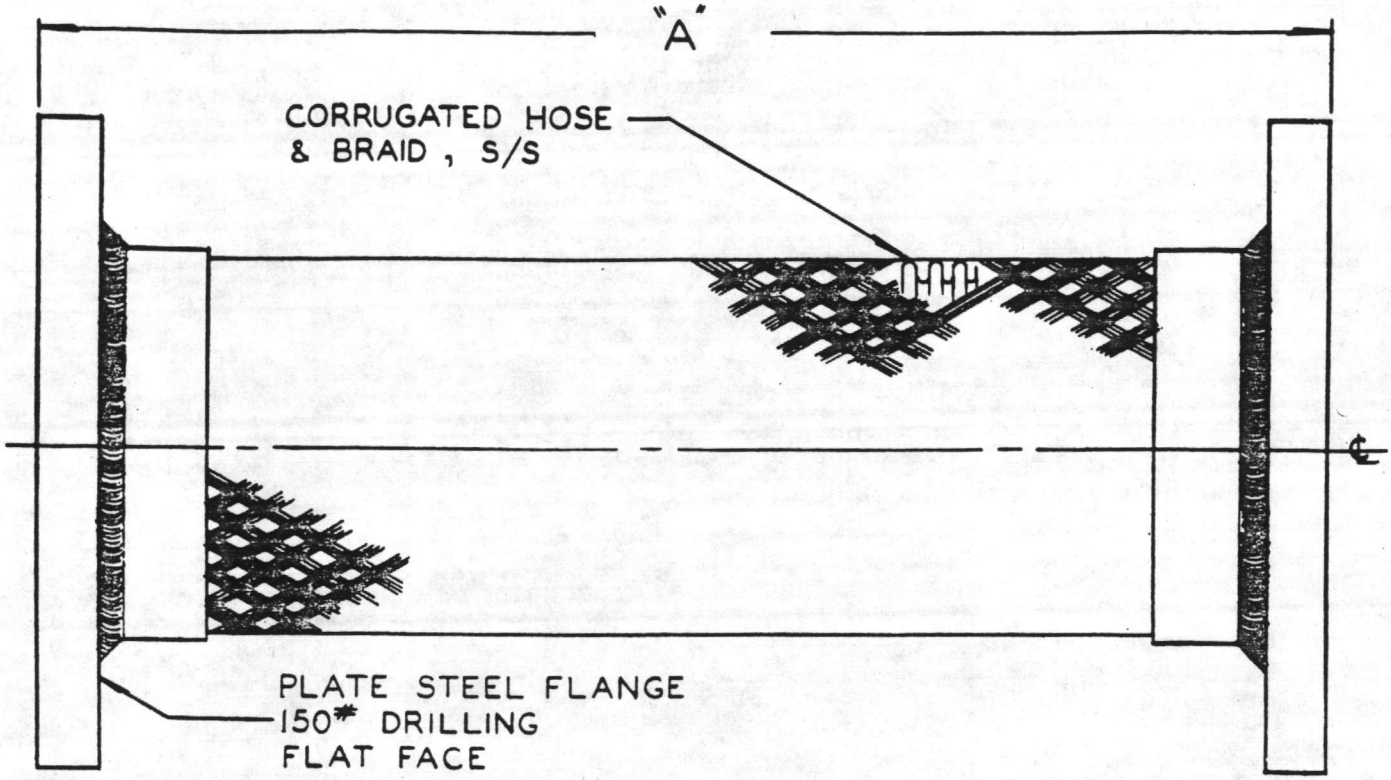

*FOR SAFE WORKING PRESSURE ABOVE 70°F, MULTIPLY PRESSURE SHOWN AT 70°F TIMES CORRECTION FACTOR OF REQUIRIED TEMP.

FOR TEMP ABOVE 70°F	
TEMP°F	FACTOR
70	1.00
200	.94
300	.88
400	.83

PIPE SIZE	A	PRESS @ 70°F*	QTY
2½"		250	
3		250	
4	9	200	6
5		200	
6	11	200	2
8		200	
10		150	
12		150	
14		125	

Par. 2.2.1
of ~~Flex~~ Flex pipe connectors.
Par. 6.3.7

CUSTOMER RAMSEY A/C

PROJECT UEPH

ENGINEER DEWEY R. WINCHESTER

PART NO. —

P. O. NO. 0535

FLEX - HOSE CO., INC.
120 LEO AVE. SYRACUSE, N. Y. 13206

DESCRIPTION:
STAINLESS STEEL
PUMP CONNECTOR

Armstrong PUMPS

ARMSTRONG ASME EXPANSION TANK SUBMITTAL DATA

File No: 5035.96
Date: Apr. 25, 1983
Supersedes: 5036.96
Date: Jan. 25, 1982

MODEL AET - CAPACITIES 15 GALS. THROUGH 505 GALS.

☑ Painted ☐ Galvanized

CUSTOMER	CUSTOMER'S ORDER NO.	ARMSTRONG REFERENCE
RAMSEY AIR COND	0521	—

ENGINEER	JOB REFERENCE	LOCATION
DEWEY R. WINCHESTER	UPEH, MCB CAMP LEJEUNE, NC	CAMP LEJEUNE N. C.

SPECIFICATION REFERENCE: SEC. 15801, PAGE 19, PAR. 6.3.8

QUANTITY: 2

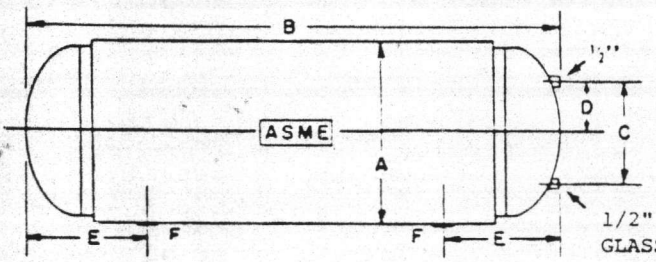

ASME - NB HORIZONTAL EXPANSION TANKS

MAXIMUM TEMPERATURE 650°F

NOTES:

1. Tanks are constructed to the ASME Code for Unfired Pressure Vessels.
2. Tanks are registered with National Board of Boiler and Pressure Vessel Inspectors.
3. Tell tale holes are furnished in lieu of inspection opening on sizes through 135 gals. Two 2" plugged inspection openings are provided on sizes 175 gals. through 505 gals.
4. Gauge glass tappings included. (Fittings not furnished by Armstrong Pumps Inc.)
5. ☑ Tanks painted with one (1) coat red oxide enamel.
   ☐ Tanks galvanized. WITH ANGLE CLIPS

REQUIRED TANK FITTING	MODEL NO.	CAPACITY GALS.	A	B	C	D	E	F NPT	WEIGHT LBS.	WORKING PRESSURE
TMA-12	AET 12 x 33	15	12"	33"	8"	4"	7"	1"	46	150#
TMA-12	AET 12 x 51	24	12"	50-1/2"	8"	4"	7"	1"	64	150#
TMA-14	AET 14 x 48	30	14"	48"	10"	5"	8-3/8"	1"	67	150#
TMA-14	AET 14 x 63	40	14"	63"	10"	5"	8-3/8"	1"	85	150#
TMA-16	AET 16 x 72	60	16"	72"	12"	6"	9-1/4"	1"	115	150#
TMA-20	AET 20 x 62	80	20"	62-1/2"	16"	8"	10"	1"	134	125#
TMA-20	AET 20 x 78	100	20"	78"	16"	8"	10"	1"	166	125#
TMA-24	AET 24 x 65	120	24"	65"	20"	10"	11-1/8"	1"	199	125#
TMA-24	AET 24 x 72	135	24"	72"	20"	10"	11-1/8"	1"	219	125#
TMAL	AET 30 x 62	175	30"	62-1/4"	22"	11"	13-1/2"	1-1/2"	304	125#
TMAL	AET 30 x 77	220	30"	77"	22"	11"	13-1/2"	1-1/2"	364	125#
TMAL	AET 30 x 84	240	30"	84"	22"	11"	13-1/2"	1-1/2"	394	125#
TMAL	AET 30 x 105	305	30"	105-3/4"	22"	11"	13-1/2"	1-1/2"	489	125#
TMAL	AET 36 x 71	285	36"	71-1/4"	28"	14"	14-3/4"	1-1/2"	498	125#
TMAL	AET 36 x 93	400	36"	93-1/2"	28"	14"	14-3/4"	1-1/2"	647	125#
TMAL	AET 36 x 120	505	36"	120-3/4"	28"	14"	14-3/4"	1-1/2"	802	125#

PREPARED BY .. TOM BURTON .....

DATE ..... 3-23-84 .....

Par 2.2.1 V. TANKS Par. 6.3.8

ARMSTRONG PUMPS INC.
NORTH TONAWANDA, N.Y. 14120

Form No. 6552-E

ARMSTRONG

SUBMITTAL DATA

AIR CONTROL DEVICES FOR HYDRONIC SYSTEMS

125 psig WORKING PRESSURE - 250°F MAXIMUM OPERATING TEMPERATURE

CUSTOMER	CUSTOMER'S ORDER NO.	ARMSTRONG REFERENCE
RAMSEY AIR COND.	0521	—

ENGINEER	JOB REFERENCE
DEWEY R. WINCHESTER	UPEH, MCAB CAMP LEJEUNE, N.C.

SPECIFICATION REFERENCE	QUOTATION REFERENCE
SEC. 15801, PAGE 19, PAR. 6.3.8	—

~~BMA~~ BOILER AIR FITTING

SIZE	1	1¼	1½	2	2½	3	4
No. Req.							

TMA TANK AIR FITTING

SIZE	9	12	16	18	20	24	L
No. Req.							1

PREPARED BY: Tom Burton

DATE: 3-23-84

Par. 2.2.1
r. Tanks
Par. 6.3.8

ARMSTRONG PRODUCTS — HALL MARK OF QUALITY

ARMSTRONG PUMPS INC.
NORTH TONAWANDA, N.Y. 14120

Litho in Canada

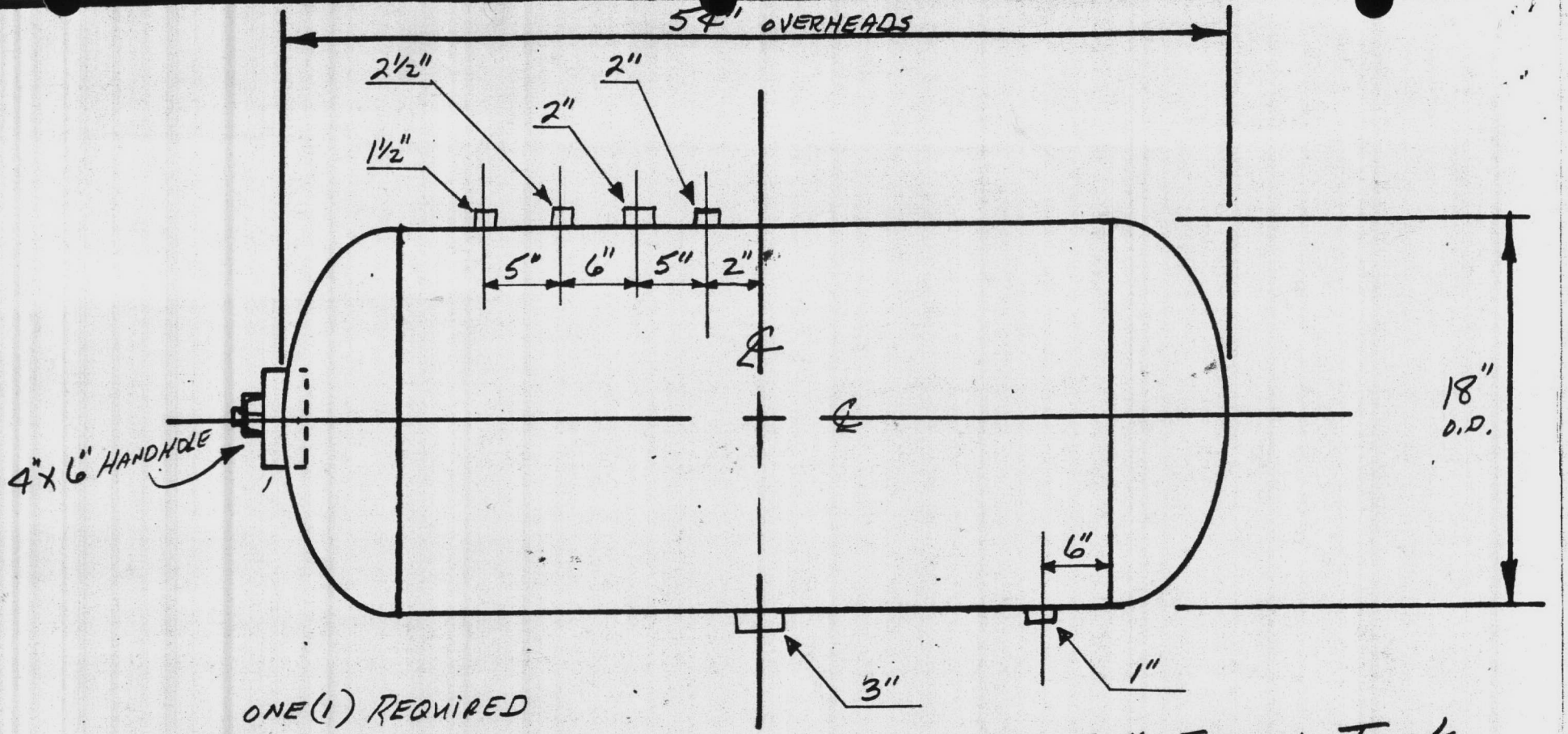

ONE (1) REQUIRED

18"x54" FLASH TANK

NOTES:

1. ASME STAMPED FOR 125# D.P. TEST AT 188#.
2. Outside painted one shop coat of GRAY PRIMER.

Par. 2.2.1
r. Tanks
Par 6.3.8

PROJECT	ENLISTED MEN'S BARRACKS CAMP LEJEUNE, N.C.
CUSTOMER	RAMSEY AIR COND., INC.
SCALE - NONE	REVISIONS -
DATE - 3-24-84	DRAWN BY - MLC
J.J. FINNIGAN CO. INC.	ATLANTA 18 GEORGIA
CUSTOMER'S P.O. NUMBER	DRAWING NUMBER
0533	A-84 5740B

NOLAND

BYPASS FEEDERS — FILTER BAG KITS

Bypass Feeders are designed to provide you with a rugged and dependable chemical solution feeder for boiler, hot and chilled water, or other liquid system compatible with our materials of construction.

Simplicity of operation is inherent in these feeders. Flat Bottom and Dome Bottom Feeders use a unique quarter turn cap with a large 3½" fill opening. High Pressure Feeders have a 1" threaded top fill inlet for installation of customer provided manual valve and fill funnel.

Filter Kit Bag Systems for Flat and Dome Bottom Feeders will allow your Feeder to REMOVE SOLIDS from your system such as welding slag, rust chips, loose scale, precipitates, etc.

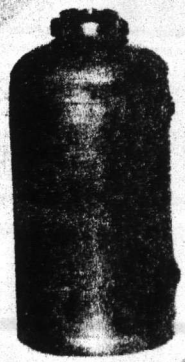

ACCESSORIES:

- 3/4" Strainer – Plastic
- 3/4" Hose Bib (Drain) – 125 PSI
- 3/4" Gate Valve – 125 PSI
- Air Release Valve – 125 PSI
- 1" Gate Valve – 125 PSI
- 3/4" Throttle Valve – 300 PSI
- 3/4" Gate Valve – 300 PSI
- 1" Gate Valve – 300 PSI
- Funnel – HP Series

Par 2.2.1
r. Tanks
Par 8

MODEL NUMBERS • DIMENSIONS • OPERATING DATA

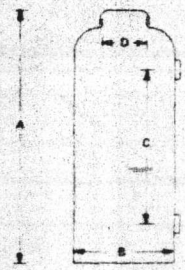

	MODEL NUMBER	A	B	C	D	E	APPROXIMATE CAPACITY	MAXIMUM WORKING PRESSURE	APPROXIMATE SHIPPING WEIGHT
FLAT BOTTOM	2HD	21"	6"	12¾"	3½"	None	2 Gallon	200 PSI	21 lbs.
	5HD	21"	10"	10¾"	3½"	None	5 Gallon	200 PSI	34 lbs.
	12HD	42"	10"	31½"	3½"	None	12 Gallon	200 PSI	59 lbs.

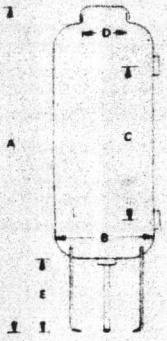

DOME BOTTOM	DB-2HD	31½"	6"	12¾"	3½"	9"	2 Gallon	200 PSI	23 lbs.
	DB-5HD	31½"	10"	10¾"	3½"	7½"	5 Gallon	200 PSI	36 lbs.
	DB-12HD	51½"	10"	31½"	3½"	7½"	12 Gallon	200 PSI	61 lbs.

HIGH PRESSURE	HP-1	11"	6"	3½"	1"	None	1 Gallon	300 PSI	11 lbs.
	HP-2½-LEG	31½"	6"	12¾"	1"	9"	2½ Gallon	300 PSI	20 lbs.
	HP-5-LEG	30½"	10"	10¾"	1"	7½"	5 Gallon	300 PSI	32 lbs.
	HP-12-LEG	51"	10"	31½"	1"	7½"	12 Gallon	300 PSI	58 lbs.

MATERIALS: Mild Steel – Cast Iron – Buna N "O" Ring – Maximum Temperature: 212°F.

TYPICAL INSTALLATIONS (Connecting Plumbing Not Included)

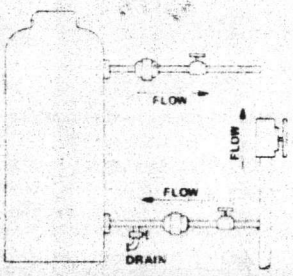

Flat Bottom Feeders require no legs. They may be drained to the level of the lower side outlet. Large 3½" fill opening with Quick Open Cap included.

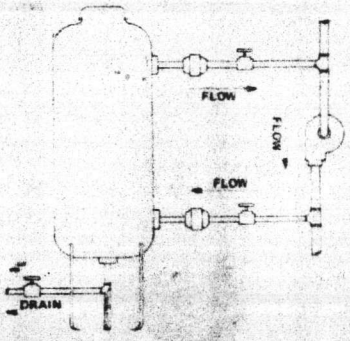

Dome Bottom Feeders include legs. They may be fully drained through bottom outlet. Large 3½" fill opening with Quick Open Cap included.

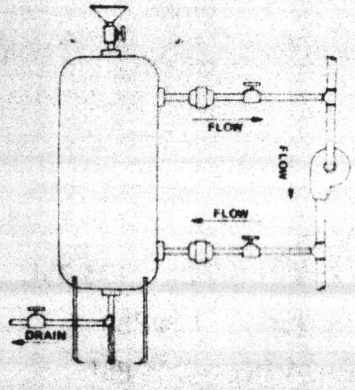

High Pressure Feeders may be fully drained through bottom outlet. 2½, 5, and 12 gallon models include legs. 1" fill opening for customer provided valve and funnel.

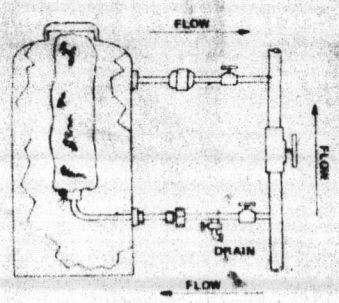

Filter Bags allow you to REMOVE SOLIDS in your system such as welding slag, rust chips, loose scale, precipitates, etc. Detailed Instruction Bulletin available.

BY-PASS FEEDERS are guaranteed for one year from date of shipment against manufacturing defects in material and workmanship which develop in the service for which they are designed. We will replace defective material without charge when returned to our factory with transportation charges prepaid; providing that material is found to be defective after inspection. We assume no liability for labor or other expenses in making adjustments or repairs. All replacements will be F.O.B. our factory.

SUBMITTAL DATA

ORDER NO. 22-1116R & 22-

DATE 4/4/84

PROJECT: Unaccompanied Enlisted Personnel Housing
Marine Corps Base
Camp Lejeune, North Carolina
Contract #N62470-82-B-2244

CONTRACTOR: Ramsey Air Conditioning Company
P. O. Box 1333
Jacksonville, North Carolina 28540

VENDOR: Spirax Sarco Company & North American Safety Valve

Product:

Domestic Hot Water Storage Heater

1 - 1-1/4" Series 25P cast steel steam pressure reducing valve in conformance with Mil Spec V16733C. (1888#/hr - 100 psi to 20 psi) See attached Bulletin 650 & 650-K29.
TAG: PRV #1

1 - Steam Relief Valve 1888#/hr set @ 30 psi in conformance with Mil Spec V-18634B. Body constructed of carbon steel with stainless steel trim, carbon steel spring rated to 400 degrees and open lever. See Drawing 1900H.
TAG: Relief

2 - 3/4" FT-30 float and thermostatic steam trap (200 #/hr @ 20 psi)

2 - 1-1/2" FT-30 float and thermostatic steam trap (1900 #/hr @ 20 psi)

2 - 1-1/2" Series 25T-2 cast iron temperature regulator. (919 #/hr @ 20 psi) (100 degrees - 160 degrees temperature range.) See attached Bulletin K-29.

APPROVAL REQUIRED
MATERIAL WILL NOT BE ORDERED UNTIL RECEIPT OF APPROVED DRAWINGS.
HOFFMAN & HOFFMAN, INC.

Par 2.2.1
S. Temp Control System
Par. 6.2.10 — 6.2.13

HOFFMAN & HOFFMAN, INC.

SUBMITTAL DATA

ORDER NO. 22-1116R & 22-

DATE 4/4/84

Convertor:

1 - 1-1/2" Series 25P cast steel steam pressure reducing valve in conformance with Mil Spec V16733C.
(3409 #/hr - 100 psi - 20 psi)
See Attached Bulletin 650-K-29.
TAG: PRV #2

1 - Steam relief valve 3409 #/hr set @ 30 psi in conformance with Mil Spec V18634B. Body constructed of carbon steel with stainless steel trim, carbon steel spring rated to 400 degrees and open lever. See Drawing 1900 K.
TAG: Relief

2 - 1-1/2" FT-30 float and thermostatic steam trap (3500 #/hr @ 20 psi)

Flash Tank:

1 - 2" FT-20 float and thermostatic steam trap (10,600 #/hr @ 2 psi)

High Pressure Drid:

3 - 1/2" HM-34/6 cast steel inverted bucket trap.
300#/hr @ 100 psi.

1 - 3/4" HM-34/8 cast steel inverted bucket trap.
800 #/hr @ 100 psi.

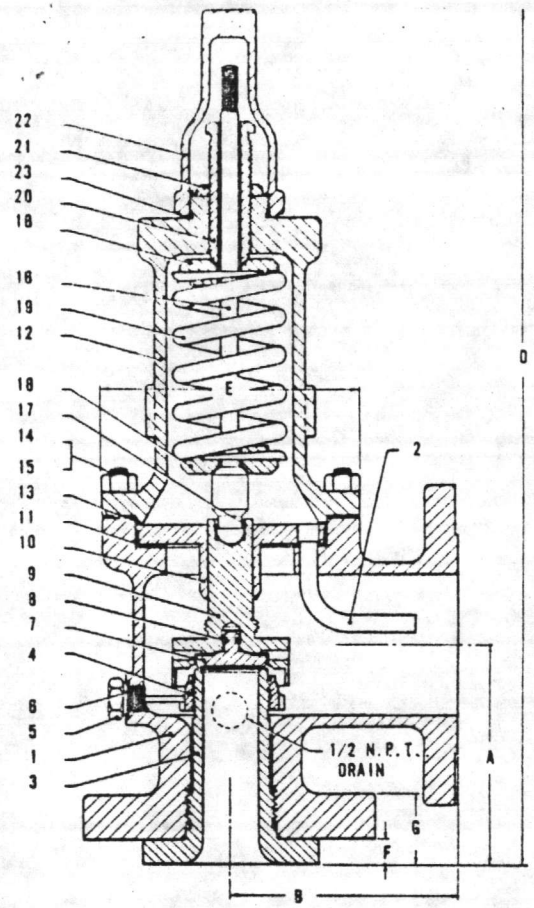

REF. NO.	NOMENCLATURE	MATERIAL
1	BASE 1905 - 1916	ASTM A216 GRADE WCB CARBON STEEL
	1920 - 1926	ASTM A217 GRADE WC1 ALLOY STEEL
2	EDUCTOR TUBE	ASTM A479 TYPE 304 STAINLESS STEEL
3	NOZZLE	ASTM A182 GRADE F316 STAINLESS STEEL
4	ADJUSTING RING	ASTM A351 GRADE CA-15 STAINLESS STEEL
5	ADJUSTING RING PIN	
	RING PIN HEAD	AISI 416 STAINLESS STEEL
	RING PIN STEM	AISI 416 STAINLESS STEEL
6	ADJ RING PIN GASKET	AISI 316 STAINLESS STEEL-ASBESTOS FILLED
7	DISC	ASTM A479 TYPE 316 STAINLESS STEEL
8	DISC RETAINER	17-7PH CONDITION A STAINLESS STEEL
9	DISC HOLDER	ASTM A479 TYPE 304 STAINLESS STEEL
10	GUIDE	
	GUIDE SLEEVE	ASTM A479 TYPE 430 STAINLESS STEEL
	GUIDE FLANGE	ASTM A276 GRADE 410 CONDITION A STAINLESS STEEL
11	GUIDE GASKET	SOFT IRON
12	BONNET	ASTM A216 GRADE WCB CARBON STEEL
13	BONNET GASKET	SOFT IRON
14	BASE STUD	ASTM A193 GRADE B7 ALLOY STEEL
15	STUD NUT	ASTM A194 CLASS 1 STEEL
16	SPINDLE	
	SPINDLE HEAD	ASTM A276 GRADE 414 STAINLESS STEEL TO ENG. INST. MA-7
	SPINDLE STEM	AISI 416 STAINLESS STEEL
17	SPINDLE RETAINER	17-7PH CONDITION A STAINLESS STEEL
18	SPRING WASHER	AISI C1018 CARBON STEEL
19	SPRING	
	TYPES 1900Hc	CARBON STEEL (PHOSPHATED)
	TYPES 1900Ht	TUNGSTEN STEEL (NOTE 2)
20	ADJUSTING SCREW	ASTM A276 GRADE 414 STAINLESS STEEL TO ENG. INST. MA-7
21	ADJUSTING SCREW NUT	AISI 416 STAINLESS STEEL
22	CAP	ASTM A216 GRADE WCB CARBON STEEL (NOTE 1)
23	CAP GASKET	AISI 316 STAINLESS STEEL ASBESTOS FILLED

NOTES:

1. CAP MATERIAL ON 1905H, 1906H, 1910H, 1920H, AND 1922H IS AISI C1030 CARBON STEEL.
2. SPRINGS WITH WIRE SIZE 1/2" & SMALLER WILL BE SUPPLIED IN INCONEL X-750 MATERIAL.

TYPE	INLET (EXCEPT AS NOTED)	OUTLET	A	B	D	E	F	G	K	L	M	N	P	Q	R	APPROX WEIGHT
1905Hc 1905Ht	1-1/2" 150# ANSI ST'D RF OR RJ	3" 150# ANSI ST'D RF	6-1/8	4-7/8	19-1/2	6-1/8	11/16	1-1/4	1-3/16	9	12	19	20	4-5/8	3-3/8	60
1906Hc 1906Ht	1-1/2" 300# ANSI ST'D RF OR RJ	3" 150# ANSI ST'D RF	5-1/8	4-7/8	19-1/2	6-1/8	11/16	1-9/16	1-3/16	8	12	19	20	4-5/8	3-3/8	60
1910Hc 1910Ht	2" 300# ANSI ST'D RF OR RJ	3" 150# ANSI ST'D RF	5-1/8	4-7/8	20-1/4	6-1/8	11/16	1-11/16	1-3/16	8	12	19	20	4-3/4	3-3/8	65
1912Hc 1912Ht	2" 600# ANSI ST'D RF OR RJ	3" 150# ANSI ST'D RF	6-1/16	6-3/8	23	6-7/8	11/16	1-11/16	1-3/8	10	12	19	20	4-7/8	3-3/8	85
1914Hc 1914Ht	2" 900# ANSI ST'D RF OR RJ	3" 150# ANSI ST'D RF	6-1/16	6-3/8	26	8-1/4	11/16	2-3/16	1-5/8	14	18	27	30	5	5-5/8	130
1916Hc 1916Ht	2" 1500# ANSI ST'D RF OR RJ	3" 300# ANSI ST'D RF	6-1/16	6-3/8	26	8-1/4	11/16	2-3/16	1-5/8	14	18	27	30	5	5-5/8	140
1920Ht.	2" 300# ANSI ST'D RF OR RJ	3" 150# ANSI ST'D RF	5-1/8	4-7/8	20-1/4	6-1/8	11/16	1-11/16	1-3/16	8	12	19	20	4-3/4	3-3/8	65
1922Ht	2" 600# ANSI ST'D RF OR RJ	3" 150# ANSI ST'D RF	5-1/8	4-7/8	20-1/4	6-1/8	11/16	1-11/16	1-3/16	8	12	19	20	4-3/4	3-3/8	65
1924Ht	2" 900# ANSI ST'D RF OR RJ	3" 150# ANSI ST'D RF	6-1/16	6-3/8	23	6-7/8	11/16	2-3/16	1-3/8	10	12	19	20	4-7/8	3-3/8	90
1926Ht	2" 1500# ANSI ST'D RF OR RJ	3" 300# ANSI ST'D RF	6-1/16	6-3/8	26	8-1/4	11/16	2-3/16	1-5/8	14	18	27	30	5	5-5/8	140

1888 #/HR SET @ 30 PSI

TAG: Domestic Hot Water Storage Heater

CONSOLIDATED SAFETY RELIEF VALVE

INDUSTRIAL VALVE AND INSTRUMENT DIVISION — DRESSER

ALEXANDRIA, LOUISIANA

CERTIFIED: L. D. Cook

REV.	DATE	CKD. BY	ENG. APPD
2	3/10/75	[illegible]	[illegible]

1900H

REV. 2

Par. 2.2.1
S. Temp Controls
Par 6.2.10

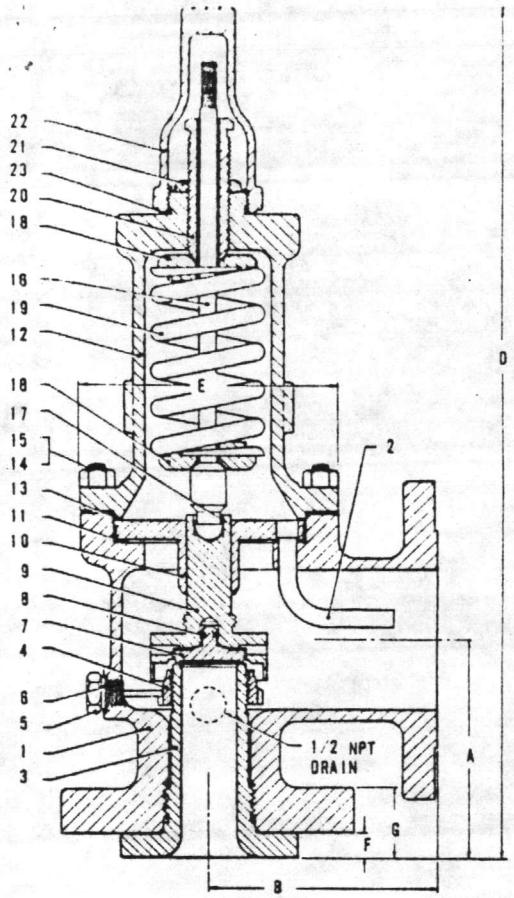

REF NO.	NOMENCLATURE	MATERIAL
1	BASE 1905-1916	ASTM A216 GRADE WCB CARBON STEEL
	1920-1926	ASTM A217 GRADE WC1 ALLOY STEEL
2	EDUCTOR TUBE	ASTM A479 TYPE 304 STAINLESS STEEL
3	NOZZLE	ASTM A182 GRADE F316 STAINLESS STEEL
4	ADJUSTING RING	19% CHROME STAINLESS STEEL TO ENG. INST. MA-12
5	ADJUSTING RING PIN	
	RING PIN HEAD	AISI 416 STAINLESS STEEL
	RING PIN STEM	AISI 416 STAINLESS STEEL
6	ADJ. RING PIN GASKET	AISI 316 STAINLESS STEEL ASBESTOS FILLED
7	DISC	ASTM A479 TYPE 316 STAINLESS STEEL
8	DISC RETAINER	17-7PH CONDITION A STAINLESS STEEL
9	DISC HOLDER	ASTM A351 GRADE CF8 STAINLESS STEEL
10	GUIDE	
	GUIDE SLEEVE	ASTM A479 TYPE 430 STAINLESS STEEL
	GUIDE FLANGE	ASTM A276 GRADE 410 CONDITION A STAINLESS STEEL
11	GUIDE GASKET	SOFT IRON
12	BONNET	ASTM A216 GRADE WCB CARBON STEEL
13	BONNET GASKET	SOFT IRON
14	BASE STUD	ASTM A193 GRADE B7 ALLOY STEEL
15	STUD NUT	ASTM A194 CLASS 1 STEEL
16	SPINDLE	
	SPINDLE HEAD	ASTM A276 GRADE 414 STAINLESS STEEL TO ENG. INST. MA-7
	SPINDLE STEM	AISI 416 STAINLESS STEEL
17	SPINDLE RETAINER	17-7PH CONDITION A STAINLESS STEEL
18	SPRING WASHER	AISI C1020 CARBON STEEL
19	SPRING	
	TYPES 1900Kc	CARBON STEEL (PHOSPHATED)
	TYPES 1900Kt	TUNGSTEN STEEL (NOTE 1)
20	ADJUSTING SCREW	ASTM A276 GRADE 414 STAINLESS STEEL TO ENG. INST. MA-7
21	ADJUSTING SCREW NUT	AISI 416 STAINLESS STEEL
22	CAP	ASTM A216 GRADE WCB CARBON STEEL
23	CAP GASKET	AISI 316 STAINLESS STEEL ASBESTOS FILLED

NOTES:
1. SPRING MATERIAL, WIRE SIZE 1/2" AND SMALLER IS INCONEL X-750.

TYPE	INLET (EXCEPT AS NOTED)	OUTLET	A	B	D	E	F	G	K	L	M	N	P	Q	R	APPROX. WEIGHT
1905Kc 1905Kt	3" 150# ANSI STD.RF OR RJ	4" 150# ANSI STD. RF	6-1/8	6-3/8	24-1/2	7-1/4	11/16	1-7/16	1-3/8	10	12	19	20	4-3/4	3-3/8	110
1906Kc 1906Kt	3" 300# ANSI STD.RF OR RJ	4" 150# ANSI STD. RF	6-1/8	6-3/8	24-1/2	7-1/4	11/16	1-13/16	1-3/8	10	12	19	20	4-3/4	3-3/8	115
1910Kc 1910Kt	3" 300# ANSI STD.RF OR RJ	4" 150# ANSI STD. RF	6-1/8	6-3/8	28	7-3/4	11/16	1-15/16	1-5/8	14	18	27	30	4-3/4	5-5/8	140
1912Kc 1912Kt	3" 600# ANSI STD.RF OR RJ	4" 150# ANSI STD. RF	7-1/4	7-1/8	29-1/4	7-3/4	11/16	1-15/16	1-5/8	14	18	27	30	4-3/4	5-5/8	150
1914Kc 1914Kt	3" 900# ANSI STD.RF OR RJ	6" 150# ANSI STD. RF	7-13/16	8-1/2	35-1/4	10-1/2	11/16	2-3/16	2-1/4	20	24	36	44	6-1/4	6-1/2	300
1916Kc 1916Kt	3" 1500# ANSI STD.RF OR RJ	6" 300# ANSI STD. RF	7-3/4	8-1/2	35-1/4	10-1/2	11/16	2-9/16	2-1/4	20	24	36	44	6-1/4	6-1/2	320
1920Kt	3" 300# ANSI STD.RF OR RJ	4" 150# ANSI STD. RF	6-1/8	6-3/8	28	7-3/4	11/16	1-15/16	1-5/8	14	18	27	30	4-3/4	5-5/8	140
1922Kt	3" 600# ANSI STD.RF OR RJ	4" 150# ANSI STD. RF	6-1/8	6-3/8	28	7-3/4	11/16	1-15/16	1-5/8	14	18	27	30	4-3/4	5-5/8	140
1924Kt	3" 900# ANSI STD.RF OR RJ	4" 150# ANSI STD. RF	7-1/4	7-1/8	29-1/4	7-3/4	11/16	2-3/16	1-5/8	14	18	27	30	4-3/4	5-5/8	165
1926Kt	3" 1500# ANSI STD.RF OR RJ	6" 300# ANSI STD. RF	7-3/4	8-1/2	35-1/4	10-1/2	11/16	2-9/16	2-1/4	20	24	36	44	6-1/4	6-1/2	320

3409 #/HR SLT @ 30 PSI
TMG Converter

CONSOLIDATED SAFETY RELIEF VALVES

DRESSER

DRESSER INDUSTRIAL VALVE & INSTRUMENT DIVISION

ALEXANDRIA, LOUISIANA

REV.	DATE	APPROVAL ENGR.		1900K	REV.
2	1/4/74	E.A. Cobb			2

CERTIFIED: L.D. Cook

Par 2.2.10
S. Temp. controls
Par. 6.2.10

TCV-3 & TCV-4

SARCO
1951 26th ST. S.W. • P.O. BOX 119, ALLENTOWN, PA. 18105
PHONE 215 797-5830 TELEX #84-7434

Bulletin 650-K 29
MAY 1982

SC.

25 Series Engineering Data

One of the White Consolidated Industries
WCI

25T

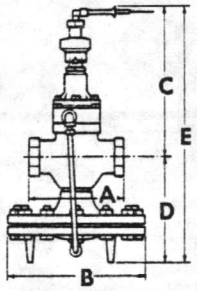

½″ to 2″ sizes have screwed connections

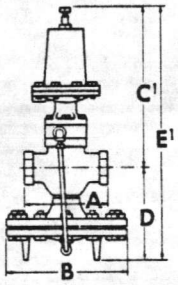

½″ to 2″ sizes have screwed connections

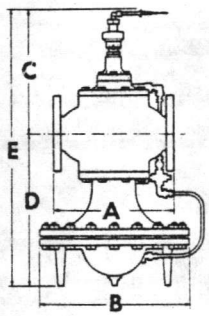

2½″ to 4″ sizes have flanged connections

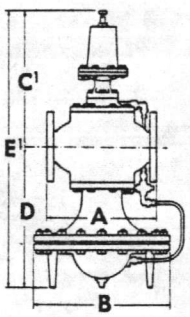

2½″ to 4″ sizes have flanged connections

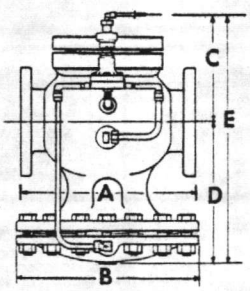

6″ size has flanged connections

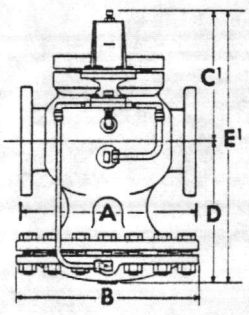

6″ size has flanged connections

25P-25BP
25PA-25PI

THERMOSTATS FOR 25T REGULATORS

Model No.	Description	Dimensions
T-1	Plain copper bulb, 8-foot brass-armored capillary tubing	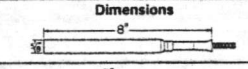
T-2	Copper bulb, union connection, 8-foot brass-armored capillary tubing	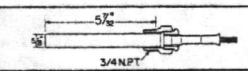
T-3	Teflon-covered bulb, 8-foot Teflon-covered capillary tubing	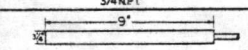
T-4	Plain copper bulb, flanged connection with adjustable extension, 8-foot brass-armored capillary tubing	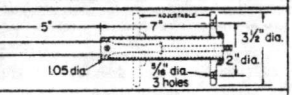
T-5	Copper bulb, union connection with brass well, 8-foot brass-armored capillary tubing	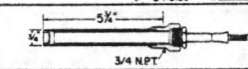
T-6	Copper bulb, union connection with Type 316 stainless steel well, 8-foot brass-armored capillary tubing	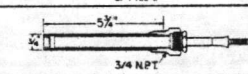
T-7	Plain copper bulb, brass extension well*, 8-foot brass-armored capillary tubing	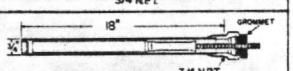
T-8	Plain copper bulb, Type 316 stainless steel extension well*, 8-foot brass-armored capillary tubing	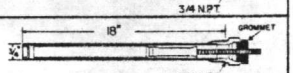
T-9	Plain copper bulb, stainless steel wall mounting bracket, 8-foot brass-armored capillary tubing	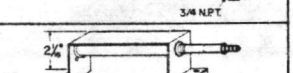
T-10	Plain stainless steel bulb. Stainless steel tubing.	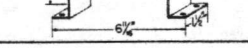
T-11	Stainless steel bulb union connection. 8′ Stainless steel tubing.	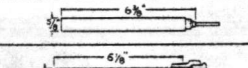
T-12	Union extension plus bulb assembly with 90° Offset, 8-foot brass-armored capillary tubing.	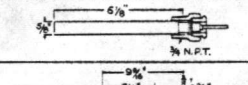

* Standard extension wells are 18″ long. Longer wells in brass or stainless steel are available.

Standard capillary tubing length is 8 feet. The next standard is 15 feet, and additional lengths can be furnished on request.

Size	A	A¹ * 250 Lbs.	B	C	C¹	D	E	E¹ **	Net Wt. Lbs.*
½″	5½		7⅝	9 13/16	12⅜6	6⅜6	16	18⅜	32
¾″	5½		7⅝	9 13/16	12⅜6	6⅜6	16	18⅜	32
1″	6		8⅝	9¾	12⅛	6¾	16½	18⅞	39
1¼″	7¼		8⅝	10⅝6	12 11/16	7⅛6	17⅜	19¾	44
1½″	7¼		8⅝	10⅝6	12 11/16	7⅛6	17⅜	19¾	44
2″	8½		10⅝	10 15/16	13⅝6	8⅜6	19⅛	21½	69
2½″	10⅞	11½	13⅝	11 11/16	14	13 15/16	25⅝	27 15/16	157
3″	11¾	12½	13⅝	11⅞6	13 15/16	14⅞6	26	28⅜	188
4″	13⅞	14½	15⅝	12 13/16	15¼	16⅛	28 15/16	31⅜	284
6″	18⅛	19	19¾	9⅝6	11⅞	16 11/16	26¼	28⅝6	560

*In the 2½″ to 6″ sizes, dimension A is for 125 lb. ANSI flanged, and dimension A¹ is for 250 lb. ANSI flanged bodies. Net weights are based on 25P for 250 lb. flanged bodies.

**1 15/16″ Less for PA without internal spring. Add 1″ for Type PI Scale.

CERTIFIED FOR:

NAME OF JOB: Par 2.2.1 S. Temp Controls

CUSTOMER: Par DATE 6.2.13

SARCO ORDER NO: _____ BY _____

25E

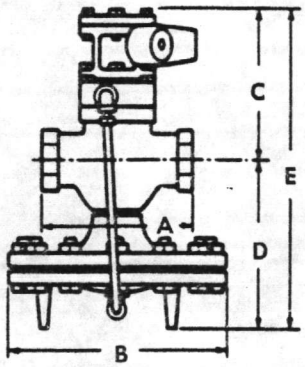

½″ to 2″ sizes have screwed connections

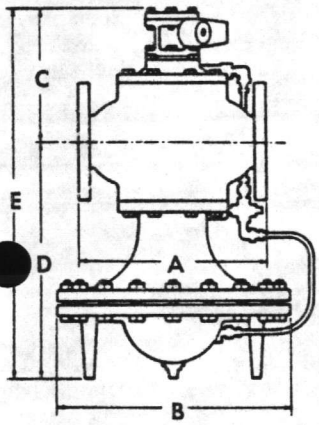

2½″ to 4″ sizes have flanged connections

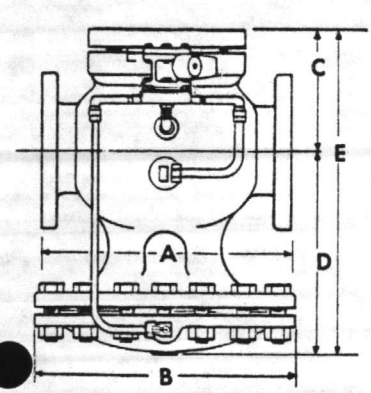

6″ size has flanged connections

25TE

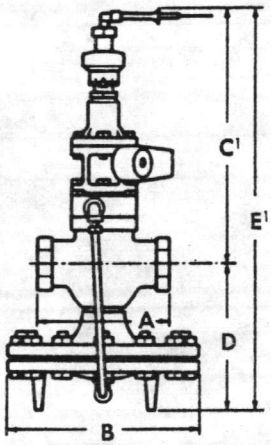

½″ to 2″ sizes have screwed connections

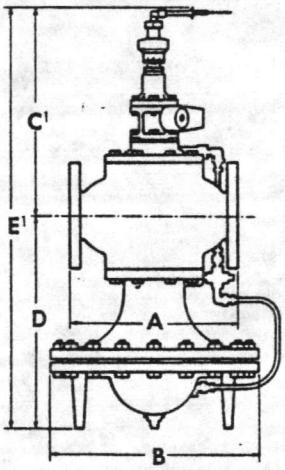

2½″ to 4″ sizes have flanged connections

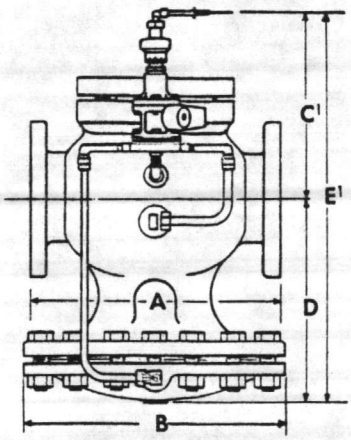

6″ size has flanged connections

25PE

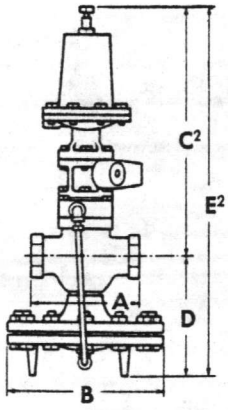

½″ to 2″ sizes have screwed connections

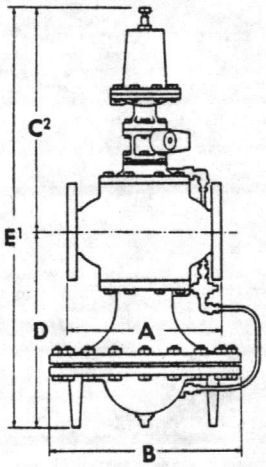

2½″ to 4″ sizes have flanged connections

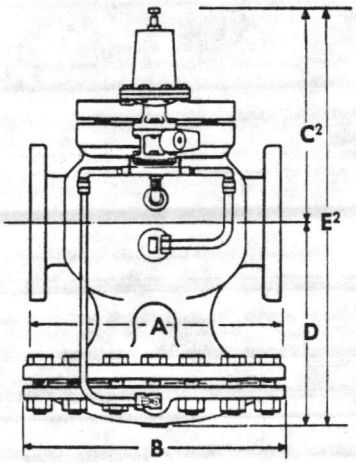

6″ size has flanged connections

25PT

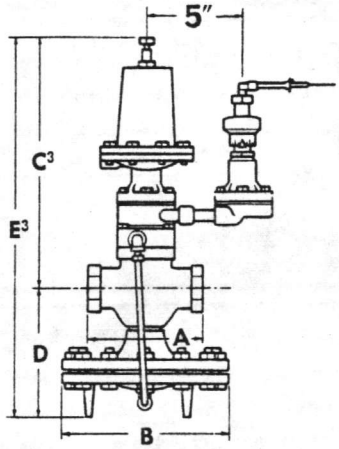

½″ to 2″ sizes have screwed connections

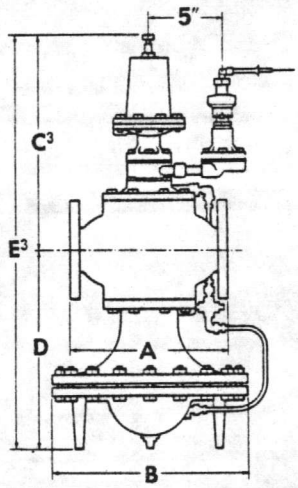

2½″ to 4″ sizes have flanged connections

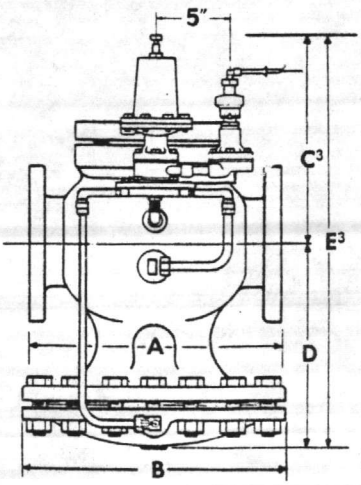

6″ size has flanged connections

CAPACITIES FOR STANDARD 25P-25PA-25PI-25PE VALVES

pounds of saturated steam per hour

INLET STEAM PRESSURE, PSIG	OUTLET STEAM PRESSURE, PSIG	NOMINAL VALVE SIZE									
		½"	¾"	1"	1¼"	1½"	2"	2½"	3"	4"	6"
C. V. FACTORS		3.48	6.5	10.5	14	20	35	56	74	115	260
15	10	95	175	285	380	540	950	1,500	2,000	3,100	7,000
	5	135	250	405	545	780	1,365	2,185	2,890	4,480	10,170
	3	155	285	465	620	880	1,550	2,470	3,260	5,080	11,440
20	12	120	230	365	490	700	1,225	1,960	2,590	4,025	9,100
	8	155	290	470	630	900	1,575	2,520	3,330	5,175	11,700
	0-5	180	335	540	720	1,025	1,795	2,870	3,790	5,895	13,325
25	15	145	270	435	580	830	1,450	2,325	3,070	4,770	10,790
	10	195	360	580	775	1,110	1,950	3,110	4,110	6,385	14,430
	0-7	205	385	620	825	1,180	2,065	3,305	4,360	6,785	15,340
30	20	155	290	470	630	900	1,575	2,520	3,330	5,175	11,700
	15	220	410	665	890	1,270	2,220	3,555	4,700	7,300	16,510
	0-12	230	430	695	925	1,320	2,310	3,695	4,885	7,590	17,160
40	30	155	290	470	630	900	1,575	2,520	3,330	5,175	11,700
	25	250	470	755	1,010	1,440	2,520	4,030	5,330	8,280	18,720
	0-18	280	525	850	1,135	1,620	2,835	4,535	5,995	9,315	21,060
50	40	190	355	575	770	1,100	1,925	3,080	4,070	6,325	14,300
	30	315	585	955	1,275	1,820	3,185	5,095	6,735	10,465	23,660
	0-21	350	650	1,050	1,400	2,000	3,500	5,600	7,400	11,500	26,000
60	45	280	520	840	1,120	1,600	2,800	4,480	5,920	9,200	20,800
	35	360	670	1,080	1,440	2,060	3,605	5,770	7,620	11,845	26,780
	0-27	385	720	1,165	1,555	2,220	3,885	6,215	8,215	12,765	28,860
75	60	280	525	850	1,135	1,620	2,835	4,535	5,995	9,315	21,060
	50	415	775	1,250	1,665	2,380	4,165	6,665	8,800	13,685	30,940
	0-35	470	875	1,415	1,890	2,700	4,725	7,560	9,990	15,525	35,100
85	70	290	540	870	1,160	1,660	2,905	4,650	6,140	9,545	21,580
	50	490	915	1,480	1,975	2,820	4,935	7,895	10,435	16,215	36,660
	0-43	515	960	1,555	2,070	2,960	5,180	8,290	10,950	17,020	38,480
100	80	370	690	1,115	1,485	2,120	3,710	5,935	7,845	12,190	27,560
	60	580	1,080	1,740	2,325	3,320	5,810	9,295	12,285	19,090	43,160
	0-48	600	1,120	1,815	2,420	3,460	6,055	9,690	12,800	19,895	45,000
125	100	440	825	1,335	1,780	2,540	4,445	7,110	9,400	14,600	33,000
	80	680	1,275	2,060	2,745	3,920	6,860	10,975	14,500	22,540	50,960
	0-62	730	1,365	2,200	2,940	4,200	7,350	11,760	15,540	24,150	54,600
150	125	490	910	1,470	1,960	2,800	4,900	7,840	10,360	16,100	36,400
	100	800	1,490	2,400	3,205	4,580	8,015	12,825	16,945	26,335	59,540
	0-76	860	1,600	2,590	3,460	4,940	8,645	13,830	18,280	28,400	64,220
175	150	490	915	1,480	1,975	2,820	4,935	7,895	10,435	16,215	36,660
	125	870	1,630	2,635	3,515	5,020	8,785	14,055	18,570	28,865	65,260
	0-87	985	1,840	2,970	3,960	5,660	9,900	15,850	20,950	32,545	73,580
200	150	840	1,600	2,540	3,390	4,840	8,470	13,550	17,900	27,830	65,920
	125	1,075	2,000	3,240	4,330	6,180	10,815	17,300	22,870	35,530	80,340
	0-103	1,125	2.100	3,390	4,520	6,460	11,300	18,000	23,900	37,145	83,980
225	175	880	1,650	2,670	3,560	5,080	8,890	14,225	18,800	29,210	66,000
	150	1,160	2,180	3,500	4,660	6,660	11,655	18,650	24,640	38,300	86,600
	0-117	1,250	2,340	3,780	5,000	7.200	12,600	20,160	26,640	41,400	93,600
250	200	925	1,730	2,790	3,720	5,320	9,300	14,900	19,680	30,600	69,200
	150	1,340	2,500	4,050	5,400	7,720	13,500	21,600	28,600	44,400	100,360
	0-131	1,385	2,590	4,180	5,570	7,960	13,930	22,300	29,450	45,800	103,500

Capacities are based on an accuracy of regulation of 1. P.S.I. and with pipe sizes to insure reasonable steam velocities. Refer to pipe sizing chart in Bulletin 650, Page 19.

SARCO

Bold faced numbers in outlet steam pressure column indicate pressures at which maximum capacity occurs. Lower outlet pressures do not increase valve capacity.

25PTE

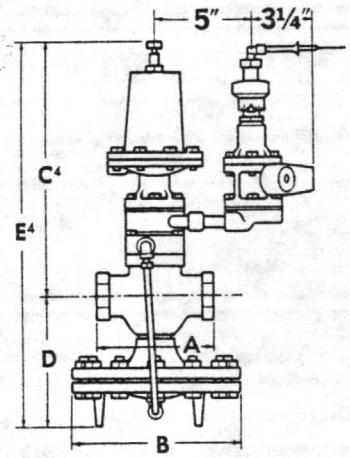

½" to 2" sizes have screwed connections

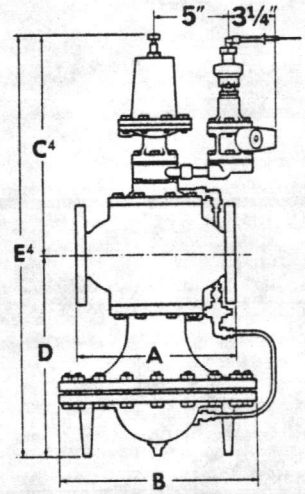

2½" to 4" sizes have flanged connections

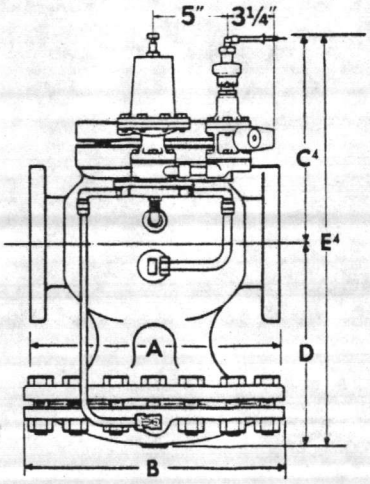

6" size has flanged connections

STANDARD TEMPERATURE SCALE RANGES

Fahrenheit	Centigrade
60° to 120°F	15° to 50°C
100° to 160°F	40° to 70°C
120° to 180°F	50° to 80°C
160° to 220°F	70° to 105°C
200° to 260°F	95° to 125°C

PILOT VALVE SPRING RANGES

Downstream Pressure	Color Code
3 to 30 psig	Yellow
20 to 100 psig	Blue
80 to 200 psig	Red

OPERATING PRESSURES: To 250 psig/17.2 bar

MAXIMUM WORKING TEMPERATURE: 450°F/232°C

MATERIALS OF CONSTRUCTION

MAIN VALVES

Body..... Cast Steel, ASTM A126 Class B
Valve Trim.....Hardened Stainless Steel
Valve Spring..... Stainless Steel
Diaphragm (also 25P pilot).....2 Ply—Hi-Flex Phosphor Bronze
Valve Stem and Guide.....Stainless Steel

PILOTS

Body.....Cast Iron, ASTM A126 Class B
Valve Trim.....Hardened Stainless Steel
Adjustment Knob.....Phenolic Plastic
Capillary.....Copper, Brass Armored. T10 & T11 are Type 316 Stn. Stl.
Pilot Seals.....Teflon

Standard "E" Solenoid: 115V, 60 Hz., Gen. purpose NEMA 1 Enclosure. 230V. Coil and Watertight NEMA 4, Explosion-proof NEMA 7 Enclosures available.

DIMENSIONS AND WEIGHTS

Size	A	A¹ * 250 Lbs.	B	C	C¹	C²	C³ & ⁴	D	E	E¹	E²	E³ & ⁴	Net Wt. Lbs.*
½"	5½		7⅜	6 1/16	12 1/16	14 7/16	13¼	6 3/16	12¼	18¼	20⅝	19 7/16	41
¾"	5½		7⅜	6 1/16	12 1/16	14 7/16	13¼	6 3/16	12¼	18¼	20⅝	19 7/16	41
1"	6		8⅝	6	12	14⅜	13 3/16	6¾	12¾	18¾	21⅛	19 15/16	48
1¼"	7¼		8⅝	6 9/16	12 9/16	14 15/16	13¾	7 1/16	13⅝	19⅝	22	20 13/16	53½
1½"	7¼		8⅝	6 9/16	12 9/16	14 15/16	13¾	7 1/16	13⅝	19⅝	22	20 13/16	53½
2"	8½		10⅝	7 3/16	13 3/16	15 9/16	14⅜	8 3/16	15⅜	21⅜	23¾	22 9/16	78
2½"	10⅞	11½	13⅜	7⅞	13 15/16	16¼	15 1/16	13 15/16	21 13/16	27⅞	30 3/16	29	166½
3"	11¾	12½	13⅝	7 13/16	13 15/16	16 3/16	15	14 7/16	22¼	28⅜	30⅝	29 7/16	197½
4"	13⅞	14½	15⅝	9⅛	15 1/16	17½	16 5/16	16⅛	25¼	31 3/16	33⅝	32 7/16	293½
6"	18⅛	19	19¾	8¾	11 13/16	14⅛	13	16 11/16	25 7/16	28½	30 13/16	29 11/16	560

*In the 2½" to 6" sizes, dimension A is for 125 Lb. ANSI flanged and A¹ is for 250 Lb. ANSI flanged bodies. All Net Wts. are based on 25PTE 250 Lb. bodies.

CAPACITIES FOR 25T, 25E, 25TE, 25PT, 25PTE VALVES

pounds of saturated steam per hour

INLET STEAM PRESSURE, PSIG	OUTLET STEAM PRESSURE, PSIG	NOMINAL VALVE SIZE										
		½"S*	½"	¾"	1"	1¼"	1½"	2"	2½"	3"	4"	6"
C.V. FACTORS		1.16	3.48	6.5	10.5	14	20	35	56	74	115	260
† 2	0	15	45	85	140	180	260	455	725	960	1,490	
† 3	0	19	55	105	170	225	320	560	900	1,185	1,840	
† 5	2	20	57	106	171	228	326	572	915	1,200	1,875	
	1	23	70	131	211	282	405	705	1,125	1,490	2,310	
† 7	4	21	63	117	189	252	360	630	1,010	1,330	2,070	
	2	27	81	151	245	326	466	815	1,300	1,725	2,680	
†10	5	29	86	160	260	345	495	865	1,385	1,830	2,840	
	3	37	110	205	332	442	632	1,105	1,770	2,340	3,635	
†12	7	29	90	167	270	360	515	900	1,445	1,910	2,965	
	4	43	128	238	386	515	735	1,285	2,060	2,720	4,225	
†15	10	30	95	175	285	380	540	950	1,500	2,000	3,100	7,000
	8	37	110	210	335	450	640	1,120	1,795	2,370	3,680	8,320
	5	45	135	250	405	545	780	1,365	2,185	2,890	4,480	10,170
20	15	34	101	190	310	410	585	1,025	1,640	2,165	3,365	7,600
	10	47	140	265	425	570	810	1,420	2,270	3,000	4,660	10,530
	0-5	60	180	335	540	720	1,025	1.795	2,870	3,790	5,895	13,325
25	20	36	107	200	325	430	650	1,080	1,725	2,280	3,545	8,000
	15	50	145	270	435	580	830	1,450	2,325	3,070	4,770	10,790
	0-7	70	205	385	620	825	1,180	2,065	3,305	4,360	6,785	15,340
30	24	41	125	230	374	500	715	1,250	1,995	2,640	4,100	9,270
	18	65	195	365	590	785	1,120	1,960	3,135	4,245	6,440	14,560
	0-12	75	230	430	695	925	1,320	2,310	3,695	4,885	7,590	17,160
40	34	45	97	255	410	545	780	1,365	2,180	2,885	4,480	10,135
	24	86	256	478	772	1,030	1,470	2,570	4,115	5,440	8,450	19,110
	0-18	95	280	525	850	1,135	1,620	2,835	4,535	5,995	9,315	21,060
50	42	57	170	320	515	690	985	1,720	2,755	3,640	5,660	12,790
	35	95	275	515	830	1,105	1,580	2,765	4,425	5,850	9,085	20,540
	0-21	115	350	650	1,050	1,400	2,000	3,500	5,600	7,400	11,500	26,000
60	50	69	210	385	625	835	1,190	2,085	3,330	4,400	6,845	15,475
	40	110	235	610	990	1,315	1,880	3,290	5,265	6,955	10,810	24,400
	0-27	130	385	720	1,165	1,555	2,220	3,885	6,215	8,215	12,765	28,860
75	65	75	225	420	675	900	1,285	2,250	3,600	4,760	7,400	16,735
	55	122	365	685	1,110	1,475	2,110	3,695	5,910	7,810	12,135	27,430
	0-35	155	470	875	1,415	1,890	2,700	4,725	7,560	9,990	15,525	35,100
100	85	102	305	575	925	1,235	1,765	3,085	4,940	6,525	10,140	22,925
	75	155	460	865	1,395	1,860	2,660	4,655	7,450	9,840	15,295	34,580
	0-48	200	600	1,120	1,815	2,420	3,460	6,055	9,690	12,800	19,895	45,000
125	110	110	335	625	1,000	1,345	1,920	3,360	5,375	7,100	11,040	24,960
	90	205	615	1,150	1,860	2,480	3,540	6,195	9,910	13,100	20,355	46,000
	0-62	245	730	1,365	2,200	2,940	4,200	7,350	11,760	15,540	24,150	54,600
150	130	140	425	790	1,280	1,700	2,440	4,265	6,825	9,000	14,000	31,680
	105	255	760	1,410	2,290	3,050	4,360	7,630	12,210	16,130	25,100	56,700
	0-76	285	860	1,600	2,590	3,460	4,940	8,645	13,830	18,280	28,400	64,220
175	155	150	450	840	1,360	1,810	2,585	4,525	7,240	9,570	14,870	33,600
	120	300	910	1,700	2,740	3,655	5,220	9,135	14,620	19,310	30,000	67,860
	0-87	330	985	1,840	2,970	3,960	5,660	9,900	15,850	20,950	32,545	73,580
200	170	215	645	1,200	1,950	2,600	3,700	6,490	10,380	13,700	21,300	48,200
	140	330	980	1,830	2,960	3,950	5,640	9,870	15,800	20,870	32,430	73,320
	0-103	375	1,125	2,100	3,390	4,520	6,460	11,300	18,000	23,900	37,145	83,980
250	210	285	850	1,590	2,450	3,430	4,900	8,575	13,700	18,130	28,200	63,700
	175	410	1,220	2,280	3,685	4,920	7,020	12,280	19,660	25,980	40,365	91,260
	0-131	460	1,385	2,590	4,180	5,570	7,960	13,930	22,300	29,450	45,800	103,500

†Specify Low pressure pilot for 2½", 3", and 4" at inlet pressures of 15 psig and below. 6" size not recommended below 15 psig.

* Steam Capacities of ½" 25T Regulators with Reduced Seat Orifices for Low Load Conditions.

SARCO

Capacities are based on using pipe sizes to insure reasonable steam velocities. Refer to pipe sizing chart in Bulletin 650, Page 19.

CAPACITIES FOR 25P-25PA-25PI-25PE REDUCED PORT VALVES

pounds of saturated steam per hour

capacities matched to nominal valve sizes for lower steam velocities

INLET STEAM PRESSURE, PSIG	OUTLET STEAM PRESSURE, PSIG	NOMINAL VALVE SIZE									
		½"S	¾"S	1"S	1¼"S	1½"S	2"S	2½"S	3"S	4"S	6"S
C. V. FACTORS		1.16	2.4	4.6	6.5	11.6	18.5	26	37	64	185
15	10	30	65	125	175	315	505	695	1,000	1,730	5,000
	5	45	95	175	250	450	720	1,015	1,440	2,500	7,200
	3	50	110	205	285	510	820	1,150	1,630	2,795	8,125
20	12	40	85	160	230	405	650	920	1,300	2,225	6,460
	8	50	110	210	290	520	825	1,170	1,655	2,825	8,300
	0-5	60	125	235	335	600	955	1,330	1,915	3,265	9,460
25	15	50	100	190	270	485	770	1,085	1,540	2,630	9,080
	10	65	135	255	360	640	1,025	1,435	2,040	3,550	10,250
	0-7	70	145	270	385	685	1,090	1,555	2,210	3,775	11,000
30	20	50	110	210	290	520	825	1,170	1,655	2,825	8,300
	15	75	150	290	410	735	1,175	1,660	2,350	4,000	11,725
	0-12	80	160	305	430	760	1,220	1,715	2,435	4,225	12,185
40	30	50	110	210	290	520	825	1,170	1,655	2,825	8,300
	25	85	175	335	470	835	1,360	1,870	2,665	4,640	13,300
	0-18	95	200	370	525	935	1,500	2,100	2,985	5,185	14,960
50	40	65	130	250	355	640	1,015	1,430	2,085	3,565	10,150
	30	105	220	420	585	1,045	1,670	2,350	3,330	5,825	16,800
	0-21	115	240	460	650	1,130	1,850	2,600	3,700	6,400	18,470
60	45	95	200	370	520	940	1,500	2,110	3,000	5,125	14,775
	35	125	250	475	670	1,195	1,900	2,760	3,810	6,590	19,000
	0-27	130	270	510	720	1,290	2,065	2,885	4,125	7,105	20,500
75	60	95	200	370	525	935	1,500	2,100	2,985	5,185	14,960
	50	140	290	545	775	1,380	2,210	3,155	4,475	7,655	22,000
	0-35	155	330	620	875	1,565	2,500	3,495	4,950	8,640	24,950
85	70	100	210	395	540	960	1,590	2,160	3,070	5,415	15,330
	50	165	350	655	915	1,660	2,650	3,735	5,295	9,045	26,000
	0-43	170	360	680	960	1,710	2,735	3,850	5,460	9,475	27,300
100	80	120	255	490	690	1,230	1,960	2,735	3,880	6,780	19,570
	60	190	400	755	1,080	1,900	3,050	4,315	6,140	10,600	30,650
	0-48	200	420	800	1,120	2,000	3,200	4,480	6,350	11,000	31,900
125	100	145	300	585	825	1,470	2,350	3,365	4,765	8,140	23,450
	80	230	480	905	1,275	2,280	3,645	5,115	7,250	12,500	36,150
	0-62	245	510	965	1,365	2,435	3,900	5,535	7,850	13,420	38,760
150	125	160	335	645	910	1,625	2,590	3,640	5,270	9,000	25,850
	100	265	555	1,050	1,490	2,645	4,230	5,930	8,415	14,650	42,300
	0-76	285	580	1,140	1,600	2,870	4,590	6,420	9,140	15,800	45,600
175	150	165	350	655	915	1,660	2,650	3,775	5,295	9,045	26,000
	125	290	600	1,160	1,630	2,915	4,665	6,550	9,285	15,900	46,350
	0-87	330	680	1,310	1,840	3,300	5,270	7,410	10,500	18,000	52,270
200	150	285	580	1,125	1,600	2,850	4,480	6,290	9,060	15,450	44,690
	125	360	740	1,420	2,000	3,570	5,725	8,015	11,350	19,700	57,000
	0-103	375	780	1,485	2,100	3,740	5,990	8,390	11,875	20,670	59,600
225	175	290	605	1,170	1,625	2,945	4,700	6,600	9,400	16,200	46,850
	150	390	810	1,540	2,180	3,885	6,200	8,715	12,350	21,300	61,500
	0-117	420	875	1,655	2,340	4,175	6,680	9,375	13,300	23,000	66,450
250	200	310	640	1,250	1,730	3,100	4,920	6,920	9,840	17,000	49,150
	150	450	935	1,775	2,500	4,465	7,155	10,000	14,200	24,700	71,250
	0-131	460	970	1,830	2,590	4,615	7,395	10,300	14,725	25,450	73,500

Capacities are based on an accuracy of regulation 1. P.S.I. and with pipe sizes to insure reasonable steam velocities. Refer to pipe sizing chart in Bulletin 650, Page 19.

SARCO

Bold faced numbers in outlet steam pressure column indicate pressures at which maximum capacity occurs. Lower outlet pressures do not increase valve capacity.

G.P.S. 5M 5/82 Printed in U.S.A.

SARCO
One of the White Consolidated Industries
WCI
1951 26th ST. S.W. • P.O. BOX 119, ALLENTOWN, PA. 18105
PHONE 215 797-5830 TELEX #84-7434

Bulletin 650-K 29
MAY 1982

25 Series Engineering Data

TAG: Domestic Hot Water Storage Heater PRV-2 SC

25T

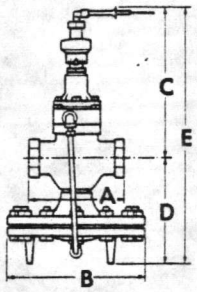

½" to 2" sizes have screwed connections

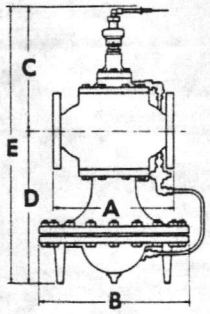

2½" to 4" sizes have flanged connections

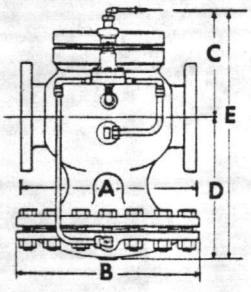

6" size has flanged connections

25P-25BP 25PA-25PI

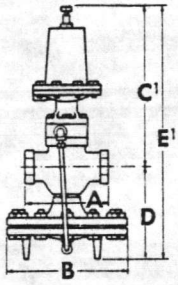

½" to 2" sizes have screwed connections

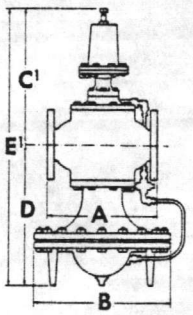

2½" to 4" sizes have flanged connections

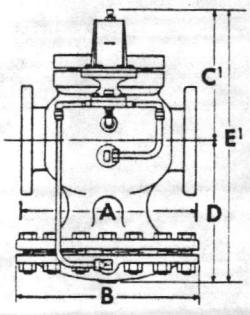

6" size has flanged connections

THERMOSTATS FOR 25T REGULATORS

Model No.	Description	Dimensions
T-1	Plain copper bulb, 8-foot brass-armored capillary tubing	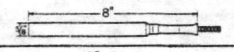
T-2	Copper bulb, union connection, 8-foot brass-armored capillary tubing	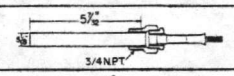
T-3	Teflon-covered bulb, 8-foot Teflon-covered capillary tubing	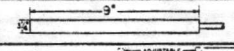
T-4	Plain copper bulb, flanged connection with adjustable extension, 8-foot brass-armored capillary tubing	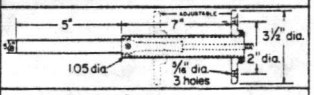
T-5	Copper bulb, union connection with brass well, 8-foot brass-armored capillary tubing	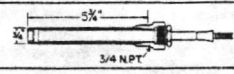
T-6	Copper bulb, union connection with Type 316 stainless steel well, 8-foot brass-armored capillary tubing	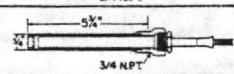
T-7	Plain copper bulb, brass extension well*, 8-foot brass-armored capillary tubing	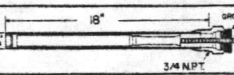
T-8	Plain copper bulb, Type 316 stainless steel extension well*, 8-foot brass-armored capillary tubing	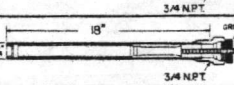
T-9	Plain copper bulb, stainless steel wall mounting bracket, 8-foot brass-armored capillary tubing	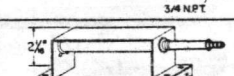
T-10	Plain stainless steel bulb. Stainless steel tubing.	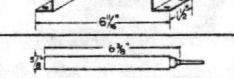
T-11	Stainless steel bulb union connection. 8' Stainless steel tubing.	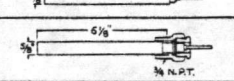
T-12	Union extension plus bulb assembly with 90° Offset, 8-foot brass-armored capillary tubing.	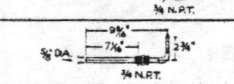

* Standard extension wells are 18" long. Longer wells in brass or stainless steel are available.

Standard capillary tubing length is 8 feet. The next standard is 15 feet, and additional lengths can be furnished on request.

Size	A	A¹ * 250 Lbs.	B	C	C¹	D	E	E¹ **	Net Wt. Lbs.*
½"	5½		7⅝	9 13/16	12 3/16	6 3/16	16	18⅜	32
¾"	5½		7⅝	9 13/16	12 3/16	6 3/16	16	18⅜	32
1"	6		8⅝	9¾	12⅛	6¾	16½	18⅞	39
1¼"	7¼		8⅝	10 5/16	12 11/16	7 1/16	17⅜	19¾	44
1½"	7¼		8⅝	10 5/16	12 11/16	7 1/16	17⅜	19¾	44
2"	8½		10⅝	10 15/16	13 5/16	8 3/16	19⅛	21½	69
2½"	10⅞	11½	13⅝	11 11/16	14	13 15/16	25⅝	27 15/16	157
3"	11¾	12½	13⅝	11 9/16	13 15/16	14 7/16	26	28⅜	188
4"	13⅞	14½	15⅝	12 13/16	15¼	16⅛	28 15/16	31⅜	284
6"	18⅛	19	19¾	9 9/16	11⅞	16 11/16	26¼	28 9/16	560

*In the 2½" to 6" sizes, dimension A is for 125 lb. ANSI flanged, and dimension A¹ is for 250 lb. ANSI flanged bodies. Net weights are based on 25P for 250 lb. flanged bodies.

**1 15/16" Less for PA without internal spring. Add 1" for Type PI Scale.

CERTIFIED FOR:

NAME OF JOB: Par 2.2.1 S. Temp Controls

CUSTOMER: Par. DATE 6.2.13

SARCO ORDER NO: _____ BY _____

25E

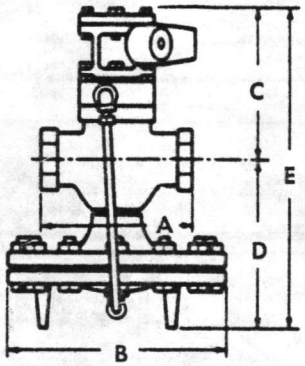

½″ to 2″ sizes have screwed connections

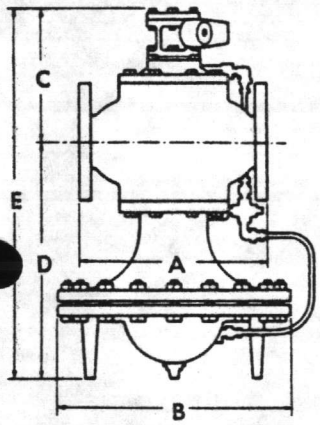

2½″ to 4″ sizes have flanged connections

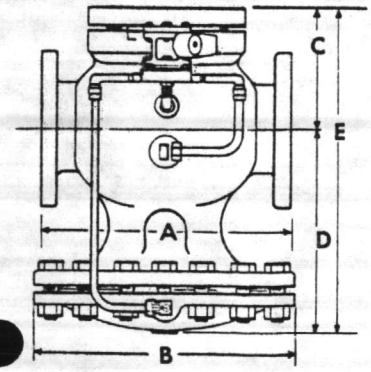

6″ size has flanged connections

25TE

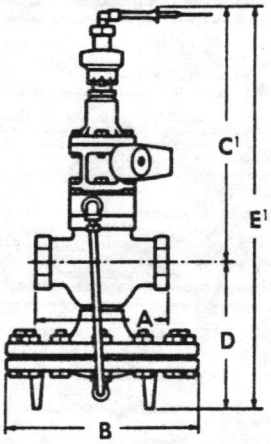

½″ to 2″ sizes have screwed connections

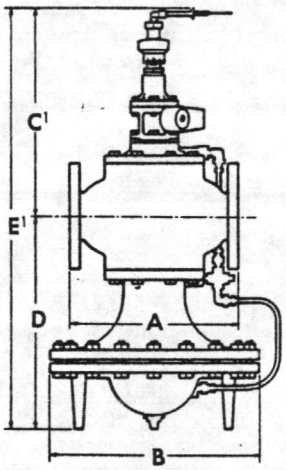

2½″ to 4″ sizes have flanged connections

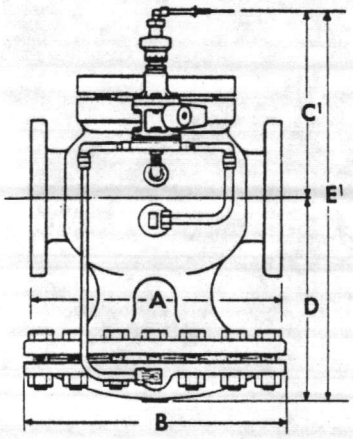

6″ size has flanged connections

25PE

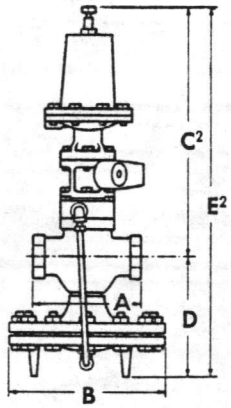

½″ to 2″ sizes have screwed connections

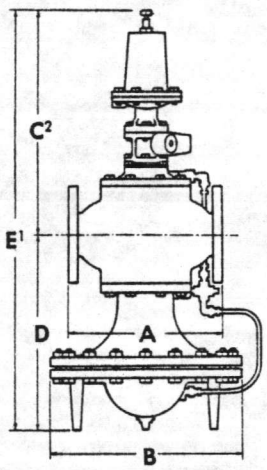

2½″ to 4″ sizes have flanged connections

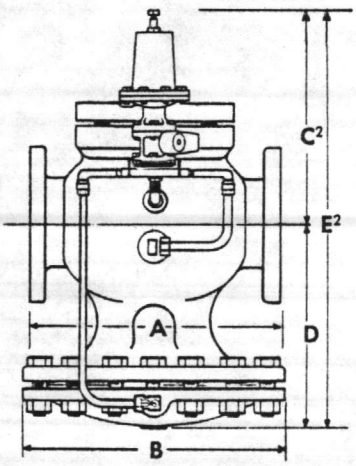

6″ size has flanged connections

25PT

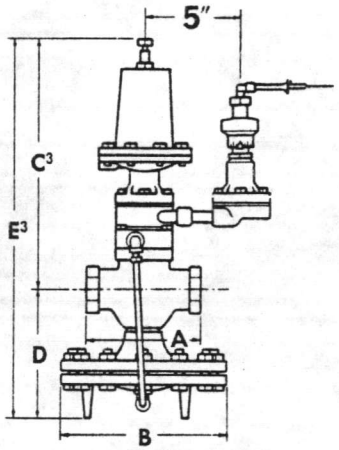

½″ to 2″ sizes have screwed connections

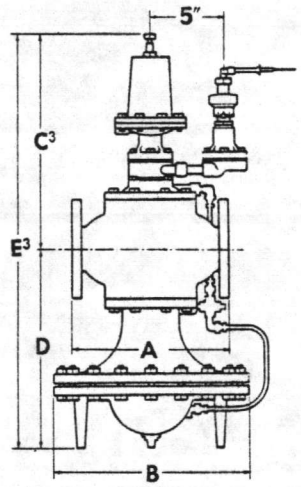

2½″ to 4″ sizes have flanged connections

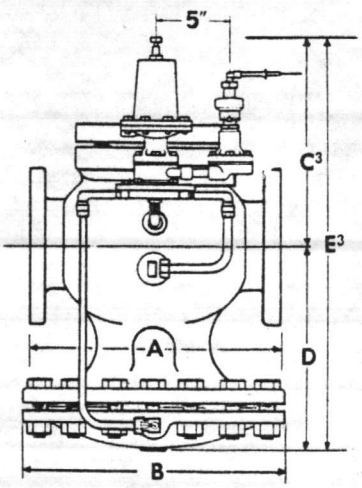

6″ size has flanged connections

CAPACITIES FOR STANDARD 25P-25PA-25PI-25PE VALVES

pounds of saturated steam per hour

SC.

INLET STEAM PRESSURE, PSIG	OUTLET STEAM PRESSURE, PSIG	NOMINAL VALVE SIZE									
		½"	¾"	1"	1¼"	1½"	2"	2½"	3"	4"	6"
C. V. FACTORS		3.48	6.5	10.5	14	20	35	56	74	115	260
15	10	95	175	285	380	540	950	1,500	2,000	3,100	7,000
	5	135	250	405	545	780	1,365	2,185	2,890	4,480	10,170
	3	155	285	465	620	880	1,550	2,470	3,260	5,080	11,440
20	12	120	230	365	490	700	1,225	1,960	2,590	4,025	9,100
	8	155	290	470	630	900	1,575	2,520	3,330	5,175	11,700
	0-5	180	335	540	720	1,025	1,795	2,870	3,790	5,895	13,325
25	15	145	270	435	580	830	1,450	2,325	3,070	4,770	10,790
	10	195	360	580	775	1,110	1,950	3,110	4,110	6,385	14,430
	0-7	205	385	620	825	1,180	2,065	3,305	4,360	6,785	15,340
30	20	155	290	470	630	900	1,575	2,520	3,330	5,175	11,700
	15	220	410	665	890	1,270	2,220	3,555	4,700	7,300	16,510
	0-12	230	430	695	925	1,320	2,310	3,695	4,885	7,590	17,160
40	30	155	290	470	630	900	1,575	2,520	3,330	5,175	11,700
	25	250	470	755	1,010	1,440	2,520	4,030	5,330	8,280	18,720
	0-18	280	525	850	1,135	1,620	2,835	4,535	5,995	9,315	21,060
50	40	190	355	575	770	1,100	1,925	3,080	4,070	6,325	14,300
	30	315	585	955	1,275	1,820	3,185	5,095	6,735	10,465	23,660
	0-21	350	650	1,050	1,400	2,000	3,500	5,600	7,400	11,500	26,000
60	45	280	520	840	1,120	1,600	2,800	4,480	5,920	9,200	20,800
	35	360	670	1,080	1,440	2,060	3,605	5,770	7,620	11,845	26,780
	0-27	385	720	1,165	1,555	2,220	3,885	6,215	8,215	12.765	28,860
75	60	280	525	850	1,135	1,620	2,835	4,535	5,995	9,315	21,060
	50	415	775	1,250	1,665	2,380	4,165	6,665	8,800	13,685	30,940
	0-35	470	875	1,415	1,890	2,700	4,725	7,560	9,990	15,525	35,100
85	70	290	540	870	1,160	1,660	2,905	4,650	6,140	9,545	21,580
	50	490	915	1,480	1,975	2,820	4,935	7,895	10,435	16,215	36,660
	0-43	515	960	1,555	2,070	2,960	5,180	8,290	10,950	17,020	38,480
100	80	370	690	1,115	1,485	2,120	3,710	5,935	7,845	12,190	27,560
	60	580	1,080	1,740	2,325	3,320	5,810	9,295	12,285	19,090	43,160
	0-48	600	1,120	1,815	2,420	3,460	6,055	9,690	12,800	19,895	45,000
125	100	440	825	1,335	1,780	2,540	4,445	7,110	9,400	14,600	33,000
	80	680	1,275	2,060	2,745	3,920	6,860	10,975	14,500	22,540	50,960
	0-62	730	1,365	2,200	2,940	4,200	7,350	11,760	15,540	24,150	54,600
150	125	490	910	1,470	1,960	2,800	4,900	7,840	10,360	16,100	36,400
	100	800	1,490	2,400	3,205	4,580	8,015	12,825	16,945	26,335	59,540
	0-76	860	1,600	2,590	3,460	4,940	8,645	13,830	18,280	28,400	64,220
175	150	490	915	1,480	1,975	2,820	4,935	7,895	10,435	16,215	36,660
	125	870	1,630	2,635	3,515	5,020	8,785	14,055	18,570	28,865	65,260
	0-87	985	1,840	2,970	3,960	5,660	9,900	15,850	20,950	32,545	73,580
200	150	840	1,600	2,540	3,390	4,840	8,470	13,550	17,900	27,830	65,920
	125	1,075	2,000	3,240	4,330	6,180	10,815	17,300	22,870	35,530	80,340
	0-103	1,125	2.100	3,390	4,520	6,460	11,300	18,000	23,900	37,145	83,980
225	175	880	1,650	2,670	3,560	5,080	8,890	14,225	18,800	29,210	66,000
	150	1,160	2,180	3,500	4,660	6,660	11,655	18,650	24,640	38,300	86,600
	0-117	1,250	2,340	3,780	5,000	7.200	12,600	20,160	26,640	41,400	93,600
250	200	925	1,730	2,790	3,720	5,320	9,300	14,900	19,680	30,600	69,200
	150	1,340	2,500	4,050	5,400	7,720	13,500	21,600	28,600	44,400	100,360
	0-131	1,385	2,590	4,180	5,570	7,960	13,930	22,300	29,450	45,800	103,500

Capacities are based on an accuracy of regulation of 1. P.S.I. and with pipe sizes to insure reasonable steam velocities. Refer to pipe sizing chart in Bulletin 650, Page 19.

SARCO

Bold faced numbers in outlet steam pressure column indicate pressures at which maximum capacity occurs. Lower outlet pressures do not increase valve capacity.

25PTE

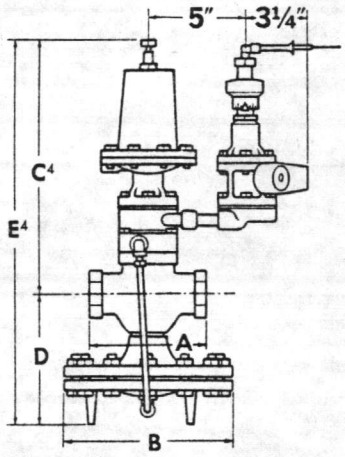

½" to 2" sizes have screwed connections

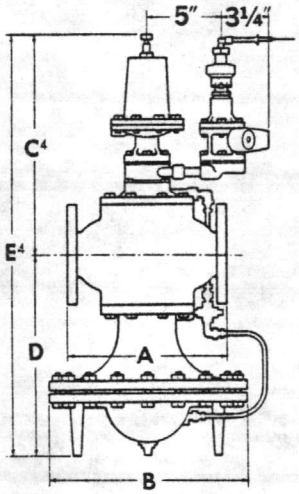

2½" to 4" sizes have flanged connections

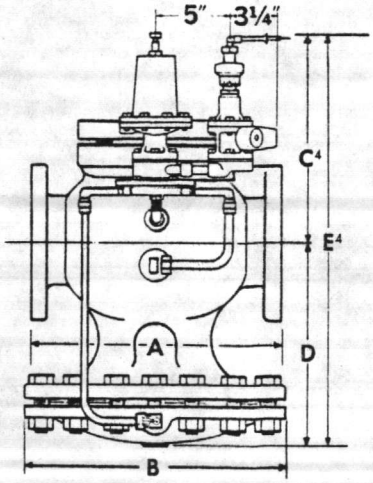

6" size has flanged connections

STANDARD TEMPERATURE SCALE RANGES

Fahrenheit	Centigrade
60° to 120°F	15° to 50°C
100° to 160°F	40° to 70°C
120° to 180°F	50° to 80°C
160° to 220°F	70° to 105°C
200° to 260°F	95° to 125°C

PILOT VALVE SPRING RANGES

Downstream Pressure	Color Code
3 to 30 psig	Yellow
20 to 100 psig	Blue
80 to 200 psig	Red

OPERATING PRESSURES: To 250 psig/17.2 bar

MAXIMUM WORKING TEMPERATURE: 450°F/232°C

MATERIALS OF CONSTRUCTION

MAIN VALVES

Body..... Cast Steel, ASTM A126 Class B
Valve Trim.....Hardened Stainless Steel
Valve Spring.....Stainless Steel
Diaphragm (also 25P pilot).....2 Ply—Hi-Flex Phosphor Bronze
Valve Stem and Guide.....Stainless Steel

PILOTS

Body..... Cast Steel, ASTM A126 Class B
Valve Trim.....Hardened Stainless Steel
Adjustment Knob.....Phenolic Plastic
Capillary.....Copper, Brass Armored. T10 & T11 are Type 316 Stn. Stl.
Pilot Seals.....Teflon

Standard "E" Solenoid: 115V, 60 Hz., Gen. purpose NEMA 1 Enclosure. 230V. Coil and Watertight NEMA 4, Explosion-proof NEMA 7 Enclosures available.

DIMENSIONS AND WEIGHTS

Size	A	A¹* 250 Lbs.	B	C	C¹	C²	C³ & ⁴	D	E	E¹	E²	E³ & ⁴	Net Wt. Lbs.*
½"	5½		7⅝	6 1/16	12 1/16	14 7/16	13¼	6 3/16	12¼	18¼	20⅝	19 7/16	41
¾"	5½		7⅝	6 1/16	12 1/16	14 7/16	13¼	6 3/16	12¼	18¼	20⅝	19 7/16	41
1"	6		8⅝	6	12	14⅜	13 3/16	6¾	12¾	18¾	21⅛	19 15/16	48
1¼"	7¼		8⅝	6 9/16	12 9/16	14 15/16	13¾	7 1/16	13⅝	19⅝	22	20 13/16	53½
1½"	7¼		8⅝	6 9/16	12 9/16	14 15/16	13¾	7 1/16	13⅝	19⅝	22	20 13/16	53½
2"	8½		10⅝	7 3/16	13 3/16	15 9/16	14⅜	8 3/16	15⅜	21⅜	23¾	22 9/16	78
2½"	10⅞	11½	13⅝	7⅞	13 15/16	16¼	15 1/16	13 15/16	21 13/16	27⅞	30 3/16	29	166½
3"	11¾	12½	13⅝	7 13/16	13 15/16	16 3/16	15	14 7/16	22¼	28⅜	30⅝	29 7/16	197½
4"	13⅞	14½	15⅝	9⅛	15 1/16	17½	16 5/16	16⅛	25¼	31 3/16	33⅝	32 7/16	293½
6"	18⅛	19	19¾	8¾	11 13/16	14⅛	13	16 11/16	25 7/16	28½	30 13/16	29 11/16	560

*In the 2½" to 6" sizes, dimension A is for 125 Lb. ANSI flanged and A¹ is for 250 Lb. ANSI flanged bodies. All Net Wts. are based on 25PTE 250 Lb. bodies.

CAPACITIES FOR 25T, 25E, 25TE, 25PT, 25PTE VALVES

pounds of saturated steam per hour

INLET STEAM PRESSURE, PSIG	OUTLET STEAM PRESSURE, PSIG	NOMINAL VALVE SIZE										
		½"S*	½"	¾"	1"	1¼"	1½"	2"	2½"	3"	4"	6"
C.V. FACTORS		1.16	3.48	6.5	10.5	14	20	35	56	74	115	260
† 2	0	15	45	85	140	180	260	455	725	960	1,490	
† 3	0	19	55	105	170	225	320	560	900	1,185	1,840	
† 5	2	20	57	106	171	228	326	572	915	1,200	1,875	
	1	23	70	131	211	282	405	705	1,125	1,490	2,310	
† 7	4	21	63	117	189	252	360	630	1,010	1,330	2,070	
	2	27	81	151	245	326	466	815	1,300	1,725	2,680	
†10	5	29	86	160	260	345	495	865	1,385	1,830	2,840	
	3	37	110	205	332	442	632	1,105	1,770	2,340	3,635	
†12	7	29	90	167	270	360	515	900	1,445	1,910	2,965	
	4	43	128	238	386	515	735	1,285	2,060	2,720	4,225	
†15	10	30	95	175	285	380	540	950	1,500	2,000	3,100	7,000
	8	37	110	210	335	450	640	1,120	1,795	2,370	3,680	8,320
	5	45	135	250	405	545	780	1,365	2,185	2,890	4,480	10,170
20	15	34	101	190	310	410	585	1,025	1,640	2,165	3,365	7,600
	10	47	140	265	425	570	810	1,420	2,270	3,000	4,660	10,530
	0-5	60	180	335	540	720	1,025	1.795	2,870	3,790	5,895	13,325
25	20	36	107	200	325	430	650	1,080	1,725	2,280	3,545	8,000
	15	50	145	270	435	580	830	1,450	2,325	3,070	4,770	10,790
	0-7	70	205	385	620	825	1,180	2,065	3,305	4,360	6,785	15,340
30	24	41	125	230	374	500	715	1,250	1,995	2,640	4,100	9,270
	18	65	195	365	590	785	1,120	1,960	3,135	4,245	6,440	14,560
	0-12	75	230	430	695	925	1,320	2,310	3,695	4,885	7,590	17,160
40	34	45	97	255	410	545	780	1,365	2,180	2,885	4,480	10,135
	24	86	256	478	772	1,030	1,470	2,570	4,115	5,440	8,450	19,110
	0-18	95	280	525	850	1,135	1,620	2,835	4,535	5,995	9,315	21,060
50	42	57	170	320	515	690	985	1,720	2,755	3,640	5,660	12,790
	35	95	275	515	830	1,105	1,580	2,765	4,425	5,850	9,085	20,540
	0-21	115	350	650	1,050	1,400	2,000	3,500	5,600	7,400	11,500	26,000
60	50	69	210	385	625	835	1,190	2,085	3,330	4,400	6,845	15,475
	40	110	235	610	990	1,315	1,880	3,290	5,265	6,955	10,810	24,400
	0-27	130	385	720	1,165	1,555	2,220	3,885	6,215	8,215	12,765	28,860
75	65	75	225	420	675	900	1,285	2,250	3,600	4,760	7,400	16,735
	55	122	365	685	1,110	1,475	2,110	3,695	5,910	7,810	12,135	27,430
	0-35	155	470	875	1,415	1,890	2,700	4,725	7,560	9,990	15,525	35,100
100	85	102	305	575	925	1,235	1,765	3,085	4,940	6,525	10,140	22,925
	75	155	460	865	1,395	1,860	2,660	4,655	7,450	9,840	15,295	34,580
	0-48	200	600	1,120	1,815	2,420	3,460	6,055	9,690	12,800	19,895	45,000
125	110	110	335	625	1,000	1,345	1,920	3,360	5,375	7,100	11,040	24,960
	90	205	615	1,150	1,860	2,480	3,540	6,195	9,910	13,100	20,355	46,000
	0-62	245	730	1,365	2,200	2,940	4,200	7,350	11,760	15,540	24,150	54,600
150	130	140	425	790	1,280	1,700	2,440	4,265	6,825	9,000	14,000	31,680
	105	255	760	1,410	2,290	3,050	4,360	7,630	12,210	16,130	25,100	56,700
	0-76	285	860	1,600	2,590	3,460	4,940	8,645	13,830	18,280	28,400	64,220
175	155	150	450	840	1,360	1,810	2,585	4,525	7,240	9,570	14,870	33,600
	120	300	910	1,700	2,740	3,655	5,220	9,135	14,620	19,310	30,000	67,860
	0-87	330	985	1,840	2,970	3,960	5,660	9,900	15,850	20,950	32,545	73,580
200	170	215	645	1,200	1,950	2,600	3,700	6,490	10,380	13,700	21,300	48,200
	140	330	980	1,830	2,960	3,950	5,640	9,870	15,800	20,870	32,430	73,320
	0-103	375	1,125	2,100	3,390	4,520	6,460	11,300	18,000	23,900	37,145	83,980
250	210	285	850	1,590	2,450	3,430	4,900	8,575	13,700	18,130	28,200	63,700
	175	410	1,220	2,280	3,685	4,920	7,020	12,280	19,660	25,980	40,365	91,260
	0-131	460	1,385	2,590	4,180	5,570	7,960	13,930	22,300	29,450	45,800	103,500

†Specify Low pressure pilot for 2½", 3", and 4" at inlet pressures of 15 psig and below. 6" size not recommended below 15 psig.

* Steam Capacities of ½" 25T Regulators with Reduced Seat Orifices for Low Load Conditions.

SARCO

Capacities are based on using pipe sizes to insure reasonable steam velocities. Refer to pipe sizing chart in Bulletin 650, Page 19.

CAPACITIES FOR 25P-25PA-25PI-25PE REDUCED PORT VALVES

pounds of saturated steam per hour

capacities matched to nominal valve sizes for lower steam velocities

INLET STEAM PRESSURE, PSIG	OUTLET STEAM PRESSURE, PSIG	NOMINAL VALVE SIZE									
		½"S	¾"S	1"S	1¼"S	1½"S	2"S	2½"S	3"S	4"S	6"S
C. V. FACTORS		1.16	2.4	4.6	6.5	11.6	18.5	26	37	64	185
15	10	30	65	125	175	315	505	695	1,000	1,730	5,000
	5	45	95	175	250	450	720	1,015	1,440	2,500	7,200
	3	50	110	205	285	510	820	1,150	1,630	2,795	8,125
20	12	40	85	160	230	405	650	920	1,300	2,225	6,460
	8	50	110	210	290	520	825	1,170	1,655	2,825	8,300
	0-5	60	125	235	335	600	955	1,330	1,915	3,265	9,460
25	15	50	100	190	270	485	770	1,085	1,540	2,630	9,080
	10	65	135	255	360	640	1,025	1,435	2,040	3,550	10,250
	0-7	70	145	270	385	685	1,090	1,555	2,210	3,775	11,000
30	20	50	110	210	290	520	825	1,170	1,655	2,825	8,300
	15	75	150	290	410	735	1,175	1,660	2,350	4,000	11,725
	0-12	80	160	305	430	760	1,220	1,715	2,435	4,225	12,185
40	30	50	110	210	290	520	825	1,170	1,655	2,825	8,300
	25	85	175	335	470	835	1,360	1,870	2,665	4,640	13,300
	0-18	95	200	370	525	935	1,500	2,100	2,985	5,185	14,960
50	40	65	130	250	355	640	1,015	1,430	2,085	3,565	10,150
	30	105	220	420	585	1,045	1,670	2,350	3,330	5,825	16,800
	0-21	115	240	460	650	1,130	1,850	2,600	3,700	6,400	18,470
60	45	95	200	370	520	940	1,500	2,110	3,000	5,125	14,775
	35	125	250	475	670	1,195	1,900	2,760	3,810	6,590	19,000
	0-27	130	270	510	720	1,290	2,065	2,885	4,125	7,105	20,500
75	60	95	200	370	525	935	1,500	2,100	2,985	5,185	14,960
	50	140	290	545	775	1,380	2,210	3,155	4,475	7,655	22,000
	0-35	155	330	620	875	1,565	2,500	3,495	4,950	8,640	24,950
85	70	100	210	395	540	960	1,590	2,160	3,070	5,415	15,330
	50	165	350	655	915	1,660	2,650	3,735	5,295	9,045	26,000
	0-43	170	360	680	960	1,710	2,735	3,850	5,460	9,475	27,300
100	80	120	255	490	690	1,230	1,960	2,735	3,880	6,780	19,570
	60	190	400	755	1,080	1,900	3,050	4,315	6,140	10,600	30,650
	0-48	200	420	800	1,120	2,000	3,200	4,480	6,350	11,000	31,900
125	100	145	300	585	825	1,470	2,350	3,365	4,765	8,140	23,450
	80	230	480	905	1,275	2,280	3,645	5,115	7,250	12,500	36,150
	0-62	245	510	965	1,365	2,435	3,900	5,535	7,850	13,420	38,760
150	125	160	335	645	910	1,625	2,590	3,640	5,270	9,000	25,850
	100	265	555	1,050	1,490	2,645	4,230	5,930	8,415	14,650	42,300
	0-76	285	580	1,140	1,600	2,870	4,590	6,420	9,140	15,800	45,600
175	150	165	350	655	915	1,660	2,650	3,775	5,295	9,045	26,000
	125	290	600	1,160	1,630	2,915	4,665	6,550	9,285	15,900	46,350
	0-87	330	680	1,310	1,840	3,300	5,270	7,410	10,500	18,000	52,270
200	150	285	580	1,125	1,600	2,850	4,480	6,290	9,060	15,450	44,690
	125	360	740	1,420	2,000	3,570	5,725	8,015	11,350	19,700	57,000
	0-103	375	780	1,485	2,100	3,740	5,990	8,390	11,875	20,670	59,600
225	175	290	605	1,170	1,625	2,945	4,700	6,600	9,400	16,200	46,850
	150	390	810	1,540	2,180	3,885	6,200	8,715	12,350	21,300	61,500
	0-117	420	875	1,655	2,340	4,175	6,680	9,375	13,300	23,000	66,450
250	200	310	640	1,250	1,730	3,100	4,920	6,920	9,840	17,000	49,150
	150	450	935	1,775	2,500	4,465	7,155	10,000	14,200	24,700	71,250
	0-131	460	970	1,830	2,590	4,615	7,395	10,300	14,725	25,450	73,500

Capacities are based on an accuracy of regulation 1. P.S.I. and with pipe sizes to insure reasonable steam velocities. Refer to pipe sizing chart in Bulletin 650, Page 19.

SARCO

Bold faced numbers in outlet steam pressure column indicate pressures at which maximum capacity occurs. Lower outlet pressures do not increase valve capacity.

G.P.S. 5M 5/82 Printed in U.S.A.

SARCO COMPANY

One of the White Consolidated Industries

WCI

ENGINEERING DATA
No. 450-K32
January, 1980

1951 26th ST. S.W. • P.O. BOX 119, ALLENTOWN, PA. 18105 PHONE 215 797-5830 TELEX #84-7434

FLOAT-THERMOSTATIC STEAM TRAPS

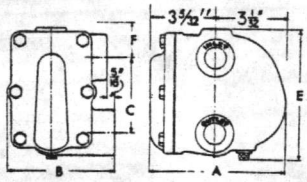

¾"& 1" FT-15—FT-125
1¼" FT-15—FT-30

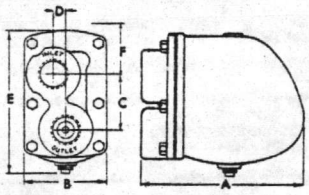

2" FT-20

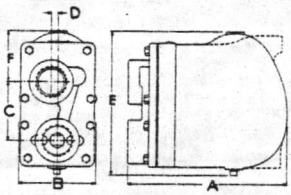

2" FTB-30
2½" FTB-40
1½", 2", 2½" FTB-175
1½" & 2" FTB-175 shown in solid line
2" FTB-30 & all
2½" shown in dotted lines

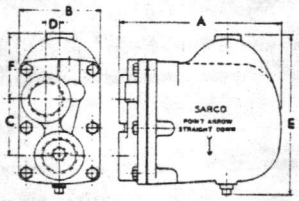

1½"& 2"
FT-15 to FT-125
1¼" FT-75 and FT-125
2" shown in dotted lines

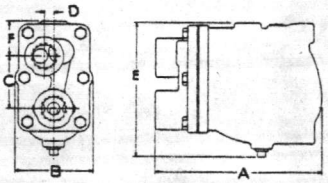

¾" to 1½"
FT-150 & FT-200

SIZE	TYPE	DIMENSIONS, INCHES A	B	C	D	E	F	WEIGHT LBS.
¾"	FT-15	6 3/16	4 5/8	3 5/16	—	5 3/4	1 5/16	9
1"	FT-15	6 3/16	4 5/8	3 5/16	—	5 3/4	1 5/16	9
1¼"	FT-15	6 3/16	4 5/8	3	—	5 3/4	1 1/2	9 1/2
1½"	FT-15	8 1/2	4 1/4	3	1 1/16	8 3/8	3 1/2	18
2"	FT-15	9 13/16	4 7/8	4 15/16	1/8	9 1/16	1 15/16	26
¾"	FT-30	6 3/16	4 5/8	3 5/16	—	5 3/4	1 5/16	9
1"	FT-30	6 3/16	4 5/8	3 5/16	—	5 3/4	1 5/16	9
1¼"	FT-30	6 3/16	4 5/8	3	—	5 3/4	1 1/2	9 1/2
1½"	FT-30	8 1/2	4 1/4	3	1 1/16	8 3/8	3 1/2	18
2"	FT-30	9 13/16	4 7/8	4 15/16	1/8	9 1/16	1 15/16	26
¾"	FT-75	6 3/16	4 5/8	3 5/16	—	5 3/4	1 5/16	9
1"	FT-75	6 3/16	4 5/8	3 5/16	—	5 3/4	1 5/16	9
1¼"	FT-75	8 1/2	4 1/4	3	1 1/16	8 3/8	3 1/2	18
1½"	FT-75	8 1/2	4 1/4	3	1 1/16	8 3/8	3 1/2	18
2"	FT-75	9 13/16	4 7/8	4 15/16	1/8	9 1/16	1 15/16	26
¾"	FT-125	6 3/16	4 5/8	3 5/16	—	5 3/4	1 5/16	9
1"	FT-125	6 3/16	4 5/8	3 5/16	—	5 3/4	1 5/16	9
1¼"	FT-125	8 1/2	4 1/4	3	1 1/16	8 3/8	3 1/2	18
1½"	FT-125	8 1/2	4 1/4	3	1 1/16	8 3/8	3 1/2	18
2"	FT-125	9 13/16	4 7/8	4 15/16	1/8	9 1/16	1 15/16	26
¾"	FT-150	8 1/2	3 15/16	2 9/16	1/2	6 7/8	1 13/16	15
1"	FT-150	8 1/2	3 15/16	2 9/16	1/2	6 7/8	1 13/16	15
1¼"	FT-150	10 3/4	5 3/4	3	9/16	9 1/8	2 1/2	30
1½"	FT-150	10 3/4	5 3/4	3	9/16	9 1/8	2 1/2	30
¾"	FT-200	8 1/2	3 15/16	2 9/16	1/2	6 7/8	1 13/16	15
1"	FT-200	8 1/2	3 15/16	2 9/16	1/2	6 7/8	1 13/16	15
1¼"	FT-200	10 3/4	5 3/4	3	9/16	9 1/8	2 1/2	30
1½"	FT-200	10 3/4	5 3/4	3	9/16	9 1/8	2 1/2	30
2"	FT-20	11 7/8	5 7/8	4 1/2	1/2	10 11/16	3	43
2"	FTB-30	14 1/2	9 1/4	7 1/4	1 3/8	15	3 3/4	89
2½"	FTB-40	14 11/16	9 1/4	7 1/4	1 3/8	15	3 3/4	90
1½"	FTB-175	8 13/16	4 1/4	3	1 1/16	8 1/16	2 1/4	22
2"	FTB-175	12 1/16	5 7/8	4 1/2	1/2	11	4	48
2½"	FTB-175	14 11/16	9 1/4	7 1/4	1 3/8	15	3 3/4	90

Materials of Construction

Body & Cover	Cast Iron, ASTM A126, Class B
Valve Head	Stainless Steel
Valve Seat	Stainless Steel
Mechanism*	Stainless Steel
Air Vent	Stainless Steel
Float	Stainless Steel

* Except FT-150, 200 & FTB which is Cast Brass with Stainless Steel heads and seats.

CERTIFIED FOR:

NAME OF JOB: _____

CUSTOMER: _____ DATE _____

SARCO ORDER NO: _____ BY _____

SARCO FLOAT & THERMOSTATIC TRAP CAPACITIES

Pressure at Trap Inlet (PSIG)

Size	Type	1/4	1/2	1	2	5	10	15	20	30	40	50	75	100	125	150	175	200
3/4"	FT-15	279	369	489	650	785	1000	1075										
1"	FT-15	279	369	489	650	785	1000	1075										
1-1/4"	FT-15	600	770	980	1240	1640	2000	2340										
1-1/2"	FT-15	1100	1700	2400	3300	5000	6600	7600										
2"	FT-15	2300	2800	3600	4650	6900	9000	10900										
3/4"	FT-30	279	369	489	650	785	1000	1075	1210	1370								
1"	FT-30	279	369	489	650	785	1000	1075	1210	1370								
1-1/4"	FT-30	375	500	690	910	1200	1500	1680	1800	2000								
1-1/2"	FT-30	1000	1300	1700	2300	3400	4600	5500	6000	7000								
2"	FT-30	1300	1800	2500	3400	5200	6800	7800	8600	10000								
3/4"	FT-75	160	213	280	365	520	700	795	875	970	1120	1230	1450					
1"	FT-75	160	213	280	365	520	700	795	875	970	1120	1230	1450					
1-1/4"	FT-75	390	550	635	910	1330	1850	2150	2400	2800	3050	3300	3800					
1-2/2"	FT-75	550	725	960	1300	1900	2650	3050	3400	4000	4400	4750	5400					
2"	FT-75	850	1100	1500	2000	3100	4150	4750	5200	5800	6400	6800	7700					
3/4"	FT-125	100	135	175	230	330	415	500	565	665	750	830	970	1110	1190			
1"	FT-125	100	135	175	230	330	415	500	565	665	750	830	970	1110	1190			
1-1/4"	FT-125	280	370	480	630	910	1200	1450	1650	1900	2075	2250	2650	2950	3150			
1-1/2"	FT-125	400	520	680	890	1300	1700	2050	2300	2700	3000	3200	3800	4200	4500			
2"	FT-125	550	675	880	1225	1950	2600	3000	3250	3800	4200	4600	5500	6100	6600			
3/4"	FT-150	170	235	315	425	650	810	940	1020	1175	1310	1410	1625	1755	1900	2025		
1"	FT-150	170	235	315	425	650	810	940	1020	1175	1310	1410	1625	1755	1900	2025		
1-1/4"	FT-150	275	360	470	610	920	1120	1300	1415	1600	1770	1935	2210	2360	2600	2750		
1-1/2"	FT-150	275	360	470	610	920	1120	1300	1415	1600	1770	1935	2210	2360	2600	2750		
3/4"	FT-200	120	160	210	280	400	520	600	660	770	850	910	1050	1175	1260	1370	1440	1512
1"	FT-200	120	160	210	280	400	520	600	660	770	850	910	1050	1175	1260	1370	1440	1512
1-1/4"	FT-200	250	335	450	600	870	1100	1280	1410	1640	1800	1910	2200	2410	2610	2825	2975	3130
1-1/2"	FT-200	250	335	450	600	870	1100	1280	1410	1640	1800	1910	2200	2410	2610	2825	2975	3130
2"	FT-20	6000	7500	9000	11500	15500	19000	22000	25000									
2"	FTB-30	12000	15800	19000	24000	31500	38000	41500	43500	45500								
2-1/2"	FTB-40	19000	25000	30000	38000	50000	60000	66000	69000	72000	73500							
1-1/2"	FTB-175	920	1300	1850	2100	2600	3200	3750	4200	5000	5650	6220	7400	8310	9220	10150	10950	
2"	FTB-175	2600	4000	5500	7100	9500	11500	13000	14000	16000	17500	18500	21000	22500	24000	25500	27000	
2-1/2"	FTB-175	7000	12000	17000	21000	27000	32000	35500	38500	42500	46000	48500	54000	58000	61000	64000	68000	

RATINGS: Series FT-15 thru FT-125 Body and Cover of Cast Iron ASTM 278, Class 30 designed to withstand 125 psi. Series FT-150 thru FT-200 and FTB-30 thru FTB-175 Body and Cover of Cast Iron designed to withstand 250 psi.

SHEMA RATED CAPACITIES (See Note)

Size	Type	1/4	1/2	1	2	5	10	15
3/4"	FT-15	70	100	140	200	210	220	230
1"	FT-15	175	250	350	500	525	550	575
1-1/4"	FT-15	425	600	850	1200	1260	1320	1380
1-1/2"	FT-15	850	1200	1700	2400	2520	2640	2760
2"	FT-15	1775	2500	3550	5000	5250	5500	5750

NOTE: Capacity ratings on FT-15 traps are in accordance with standards adopted by the Steam Heating Equipment Mfrs. Assn. providing for continuous air elimination when the trap operates at maximum rating. A safety factor is not required. SHEMA rated trap capacities are based on pressure differential. All other trap ratings are actual continuous discharge capacities at steam temperature. A safety factor is recommended on all traps except Shema rated to provide reserve capacity for peak loads or other unusual or abnormal operating conditions.

SARCO COMPANY

One of the White Consolidated Industries

WCI

1951 26TH ST. S.W.,

ALLENTOWN, PA. 18105

PHONE 215 797-5830

GPS 10M 1-80 Printed in U.S.A.

SARCO COMPANY, INC.

ENGINEERING DATA
No. 361-K43

AUGUST 1983

1951 26th ST. S.W. • P.O. BOX 119, ALLENTOWN, PA. 18105 PHONE 215 797-5830 TELEX #84-7434

HM34 *CAST STEEL* INVERTED BUCKET TRAP

with ½″ to 1″ Screwed, Socket Weld or Flanged Ends

MAXIMUM WORKING CONDITIONS

0-464 psi at 482°F / *32 bar at 250°C*

The maximum working differential pressure is limited by the orifice size which is indicated by the stroke number, eg. 34/6, and is shown in the following table:

Size	Maximum differential pressure 60 psi *4 bar*	120 psi *8.5 bar*	170 psi *12 bar*	290 psi *20 bar*	464 psi *32 bar*
½″ /*15 mm*	34/8	34/7	34/6	34/5	34/4
¾″LC/*20mm*LC	34/8	34/7	34/6	34/5	34/4
¾″ /*20mm*	34/10	34/8	34/7	34/6	34/5
1″ /*25mm*	34/12	34/10	34/8	34/6	34/5

MAXIMUM BODY DESIGN CONDITIONS

580 psi at 248°F / *40 bar at 120°C*
464 psi at 482°F / *32 bar at 250°C*
304 psi at 752°F / *21 bar at 400°C*
Cold Hydraulic Test 870 psi / *60 bar*

PIPE CONNECTIONS

HM341 Screwed NPT, API or BSP
HM342 Socket Weld Ends
HM343 Flanged to ANSI 150 or 300, DIN PN 40 and BS 4504.

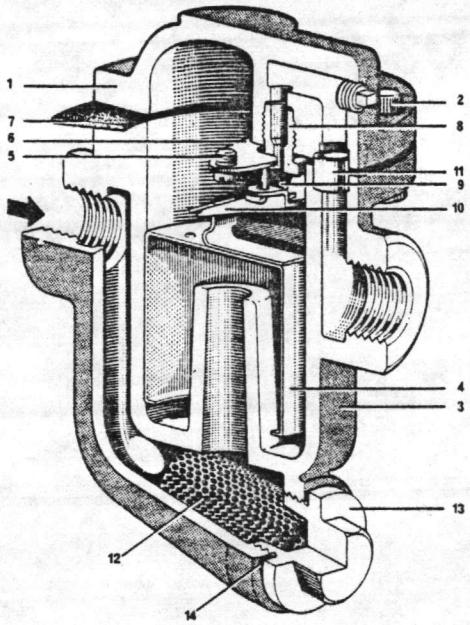

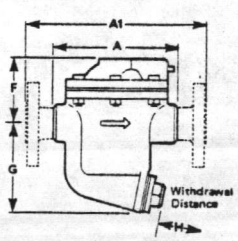

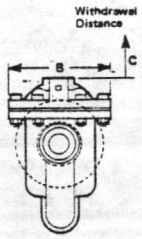

MATERIALS OF CONSTRUCTION

No	Part	Material
1	Cover	Cast Steel ASTM A216WCB
2	Cover Bolts & Nuts ½″ to ¾″ 1″	Steel M8 x 30 M12 x 45
3	Body	Cast Steel ASTM A216WCB
4	Bucket	Stainless Steel
5	Valve Guide Plate Screws	Stainless Steel M4.5 x 10 mm
6	Valve Guide Plate	Stainless Steel
7	Cover Gasket	Compressed Asbestos Fibre
8	Valve Seat	Stainless Steel
9	Valve	Stainless Steel
10	Valve Lever	Stainless Steel
11	Ferrule	Stainless Steel
12	Strainer Screen	Stainless Steel
13	Strainer Cap	Stainless Steel
14	Strainer Gasket	Compressed Asbestos Fibre

DIMENSIONS AND WEIGHTS

Size		Dimension A	A1	B	C	F	G	H	Weight Scr/SW	Flanged
½″	in	4¾	8 9/32	4⅛	4	2⅝	3½	2⅜	5¾ Lb	9⅞ Lb
15mm	*mm*	*120*	*210*	*105*	*100*	*67*	*89*	*60*	*2.6 Kg*	*4.5 Kg*
¾″LC	in	4¾	8 9/32	4⅛	4	2⅝	3½	2⅜	5¾ Lb	15 7/16 Lb
20mmLC	*mm*	*120*	*210*	*105*	*100*	*67*	*89*	*60*	*2.6 Kg*	*7.0 Kg*
¾″	in	4¾	8 9/32	4⅛	4	3½	4 7/32	2⅜	8 13/16 Lb	15 7/16 Lb
20mm	*mm*	*120*	*210*	*105*	*100*	*88*	*107*	*60*	*4.0 Kg*	*7.0 Kg*
1″	in	7 3/32	9 1/16	6 5/16	6 5/16	5 23/32	4¾	3⅜	22⅞ Lb	26½ Lb
25mm	*mm*	*180*	*230*	*160*	*160*	*145*	*120*	*85*	*10.4 Kg*	*12.0 Kg*

CERTIFIED FOR:

NAME OF JOB:_____

CUSTOMER:_____ DATE_____

SARCO ORDER NO:_____ BY_____

HM34 INVERTED BUCKET TRAP

CAPACITIES

Hot condensate at approximately 6°F / 3°C below saturated steam temperature.

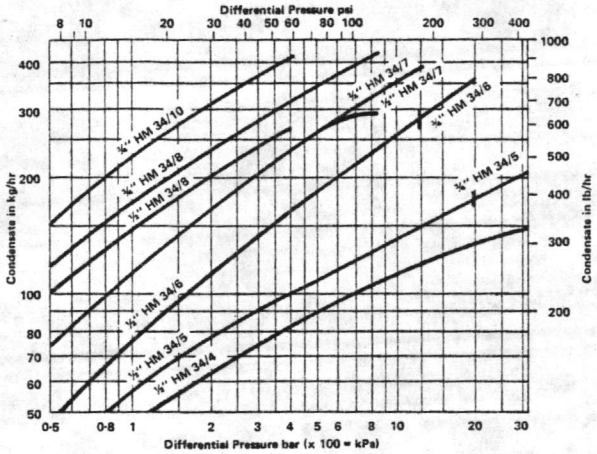

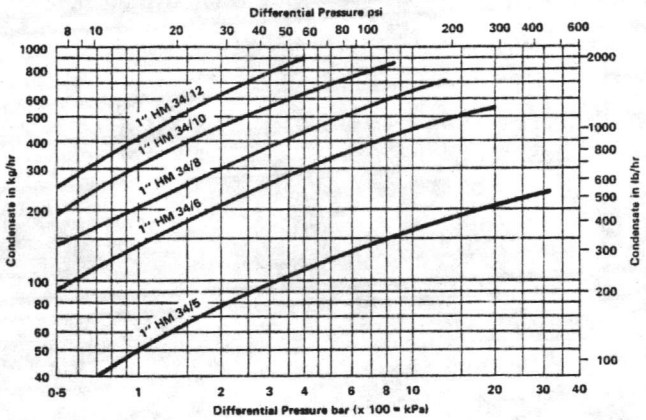

TRAP SELECTION AND INSTALLATION

Select trap size with orifice which meets the capacity and operating pressure requirements of the application, then specify pipe connections desired.

Example: ½" HM341/5 with screwed ends for pressure to 290 psi.

Trap may be insulated when installed where it is subject to freezing conditions.

AVAILABLE SPARE PARTS

The spare parts available are shown in heavy outline. Parts drawn in broken line are not supplied as spares.

AVAILABLE SPARE PARTS	
VALVE AND SEAT ASSEMBLY State pressure range	A,B,C D (2 of)
BUCKET	E
COVER GASKET AND FERRULE (pkt of 3 of each)	F,G
STRAINER SCREEN	H
STRAINER SCREEN GASKET (pkt of 3 of each)	J
SET OF COVER BOLTS AND NUTS (set of 6)	K

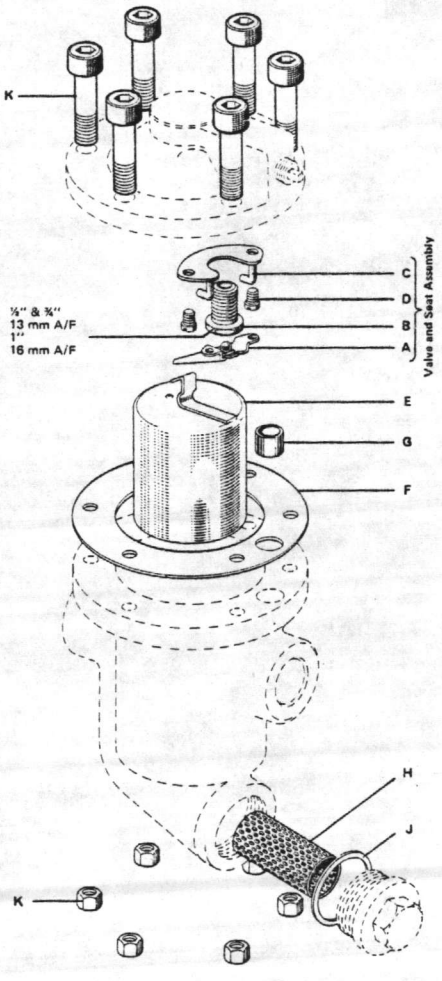

HOW TO ORDER PARTS

Always order spares by using the description given in the column headed Available Spare Parts and stating the size and series of the trap.

Example: 1—Valve and Seat Assembly for ½" Sarco HM34/7 Inverted Bucket Steam Trap.

HOW TO FIT VALVE AND SEAT ASSEMBLY

Isolate trap, remove cover by undoing cover nuts K. Unhook the bucket from the valve lever A. Remove the valve seat B. Remove the valve guide plate C by undoing the two screws D. Screw in new valve seat, using a little jointing paste on the threads and making sure the joint faces are clean. Fix new valve guide plate in position by new screws which are supplied, hook new valve lever over pins on valve guide plate and centralize valve to the orifice and tighten screws.

SARCO COMPANY, INC.
1951 26TH ST. S.W. • P.O. BOX 119, ALLENTOWN, PA 18105
PHONE (215) 797-5830 TELEX 84-7434

GPS 15M Printed in U.S.A.

spirax

BULLETIN 650
October 1983

STEAM PRESSURE REGULATORS

WITH STEAM CONTROL APPLICATION

Temperatures, Pressures, Sizes	Control Functions	Page	Type • Control Pilots
Operating Pressures: Cast Iron to 250 psig/17.2 bar Cast Steel to 300 psig/20.7 bar	TEMPERATURE REGULATION	6	25T
	PRESSURE REDUCTION	5	25PA
Maximum Working Temperature: Cast Iron to 450°F/232°C Cast Steel to 600°F/316°C	PRESSURE REDUCTION	5	25PI
	PRESSURE REDUCTION	10	25P
Temperature Regulator Ranges: 0° to 300°F/150°C	ELECTRIC ON-OFF CONTROL	14	25E
Valve Sizes screwed: Cast Iron & Cast Steel ½", ¾", 1", 1¼" 1½", and 2"	TEMPERATURE WITH ELECTRIC OVERRIDE	15	25TE
	PRESSURE WITH ELECTRIC OVERRIDE	15	25PE
Valve Sizes, flanged: Cast Iron 2½", 3", 4" and 6" 125 lb. ANSI or 250 lb. ANSI	PRESSURE AND TEMPERATURE	16	25PT
Cast Steel 2½", 3" and 4" 300 lb. ANSI	PRESSURE AND TEMPERATURE WITH ELECTRIC OVERRIDE	18	25PTE

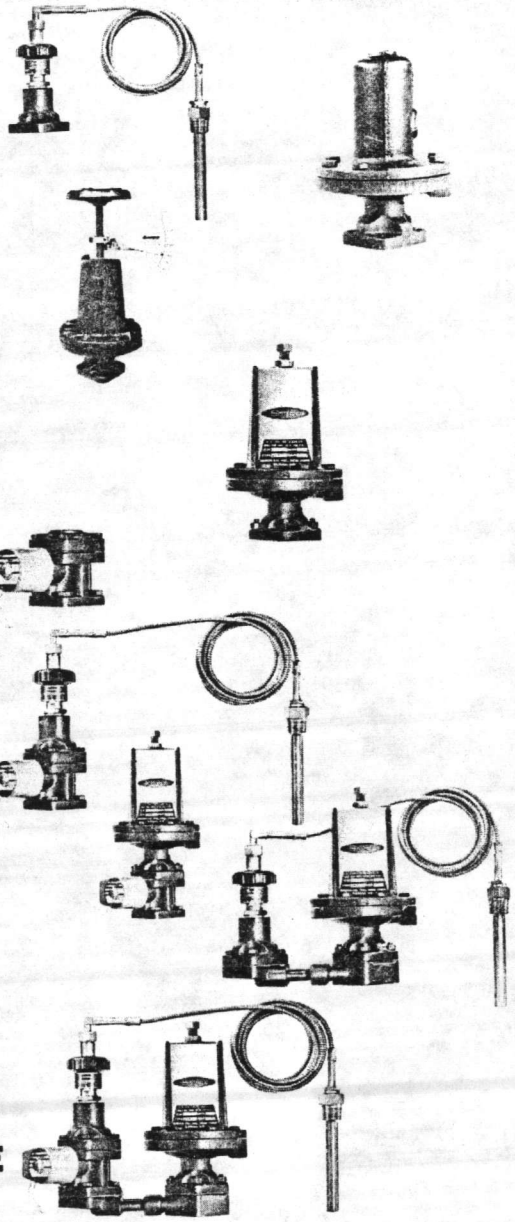

MAIN VALVES

- **Interchangeable with all Pilots**
- **Cast Iron and Cast Steel Construction**
- **Standard and Reduced Port Capacities**

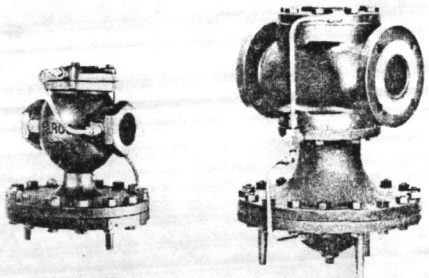

High-Performance Materials

Sarco builds 25-Series Regulators with high-quality heat- and corrosion-resisting materials at all critical points. For example, valve stems are stainless steel; head and seat are hardened stainless steel; diaphragms are two-ply phosphor bronze; and pilot valve seals are Teflon. The engineering design has been thoroughly proven in service.

Low Maintenance Cost

Whenever inspection or maintenance does become necessary, a Sarco 25 Regulator saves downtime and labor because all its key parts are more readily accessible than corresponding parts of any other currently available regulator valve. For example, with the body cap removed, the main valve head lifts off its stem, and the seat comes out with a conventional hex socket wrench. The extreme simplicity of these and other maintenance operations is a long-term user benefit.

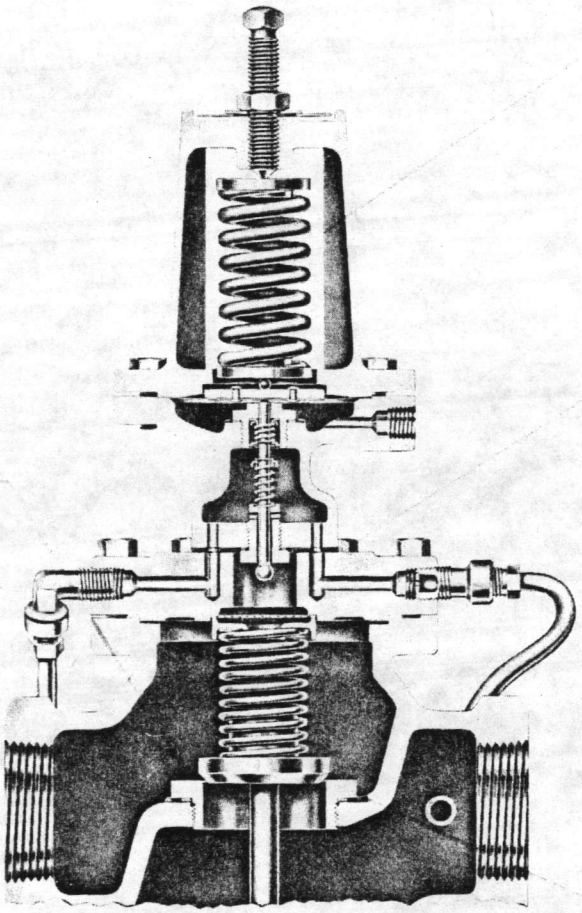

Proportions and details are somewhat different in larger, flanged valve bodies. Principles are the same.

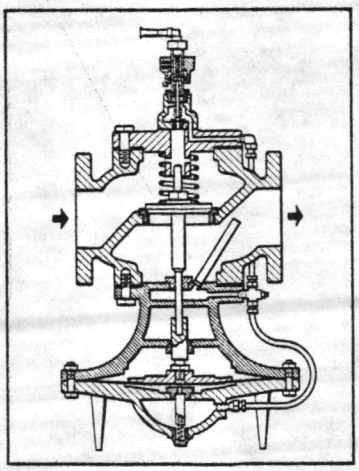

Easier Pilot Interchangeability

Inventories can be reduced considerably, because it is not necessary to stock each valve size you will need with every type of pilot control it might require. Just put the desired pilot on the right size valve. Sarco will be glad to ship valves and pilots boxed separately so that they can be assembled as required without the trouble of switching components.

It has always been possible to install any type of pilot—or combination of pilots—on a 25-Series valve body. Now it is easier than ever.

No need to change integral tubing connection: Just bolt the pilot you select to the flanged cover plate. Or bolt on the flanged adapter plate and install a combination of two or three pilots on the same valve body. These are simple jobs, and they take only a few minutes.

Any size 25-Series valve body—from ½-inch to 6-inch—can be equipped for any functional operating mode in exactly the same way. Pilots are completely interchangeable.

Interchangeable Pressure Pilot Springs

The pressure pilot accommodates any one of three easily interchangeable pilot springs—each designed to give best performance in a given pressure range. Pilot springs are color coded by Sarco for error-free selection. Spring installation is a quick, simple task.

Choice of Pilots

Shown here with a pressure pilot, these Sarco regulators are also available with multiple-pilot combinations. An electrically actuated auxiliary pilot can be used with either the pressure or temperature pilot. Pressure and temperature pilots can be combined on one valve body, and this combination can have an electrically actuated auxiliary pilot. Or, an electric pilot alone can operate the valve for on-off control. All pilots and all their combinations are interchangeable.

Dead-End Shutoff

Whenever a pilot valve closes, the single-seated main valve shuts off tight. No leakage! The main valve return spring plus steam pressure acting on the valve head insure dead-end shutoff.

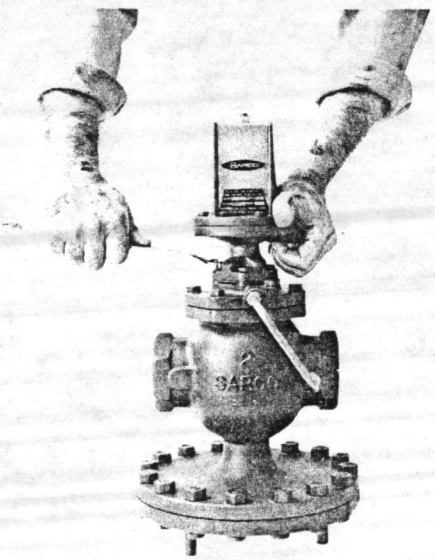

Calibrated Temperature Pilot Dial

No guessing about temperature settings: Sarco puts a convenient calibrated dial on the temperature pilot. It is easy to adjust with fingertip control. When a change of temperature setting is required, the easy-to-read dial shows the amount of adjustment needed.

Sensitive Solid-Fill Thermostat

The temperature-sensing system that powers the thermostatic pilot valve is completely filled with a non-compressible fluid. Thermal expansion and contraction of this liquid—not a critical vapor pressure relationship—assures positive, uniform motion to the pilot valve for each degree of temperature change. The small thermostatic bulb is designed to keep the sensing fluid close to the heated surface where it will detect any temperature change and react immediately.

Responsive Yet Stable

Sarco 25-Series regulators respond immediately to heavy or light load changes. Telfion seals prevent sticky operation of pilot valves. Pressures above and below the large diaphragm are closely controlled for sensitivity and accuracy of regulation, along with maximum capacity at full load. The control system, though responsive and fast, is entirely stable.

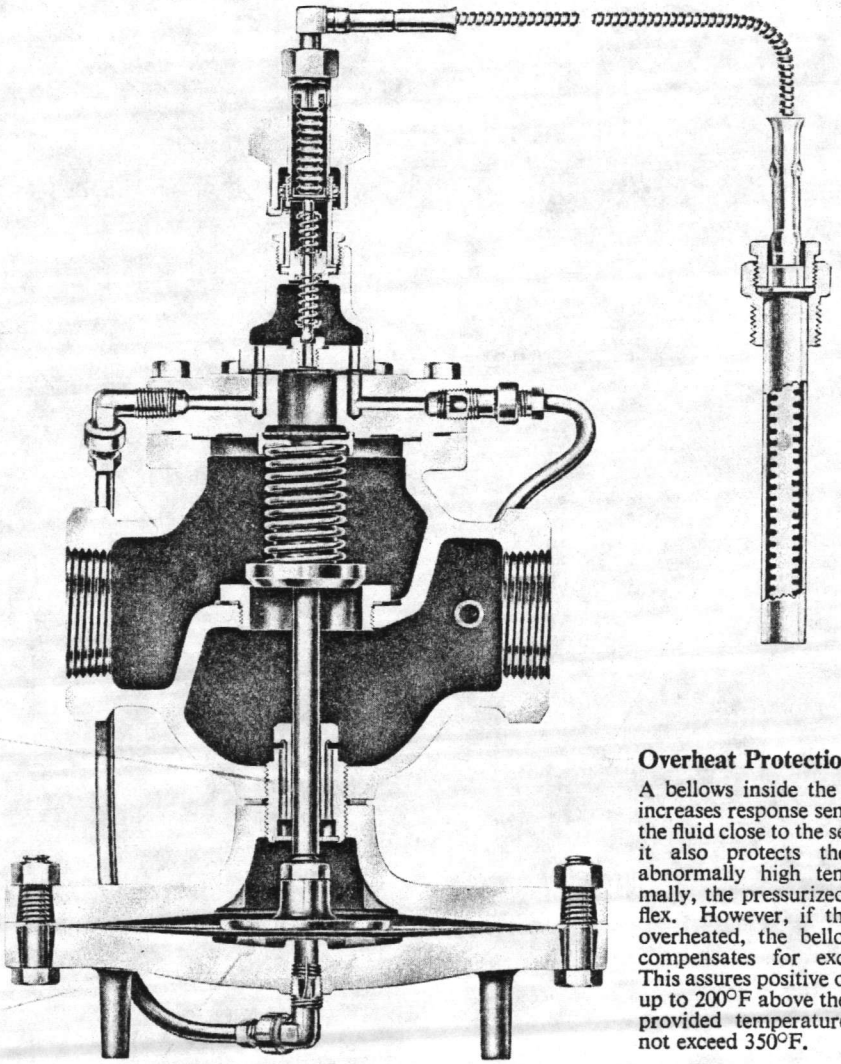

High Standard and Reduced Port Capacity

Size for size, Sarco 25-Series Regulator valves offer maximum steam capacities. Proportions of valve bodies, shapes or passages and the relatively high lift of the main valve head all contribute to maximum efficiency. The outstanding performance of these 25-Series valves is proven through years of successful field service under the most severe conditions.

Patented Self-Scrubbing Guide and Deflector Seal

Steam passing through the main valve at high velocity forces a small controlled flow along the valve stem through the top valve guide. This flushes the guiding surfaces to keep them clean and free from sticking. A patented diverting system prevents objectionable pressure buildup above the diaphragm, which would tend to decrease capacity and control stability.

Overheat Protection

A bellows inside the thermostatic bulb increases response sensitivity by keeping the fluid close to the sensing surface, and it also protects the system against abnormally high temperatures. Normally, the pressurized bellows does not flex. However, if the bulb should be overheated, the bellows contracts and compensates for excessive expansion. This assures positive overheat protection up to 200°F above the control set point, provided temperatures at the bulb do not exceed 350°F.

Body Construction

Main valves and pilots are available in cast iron to 6″ size for 250 psig service, or in cast steel to 4″ size for 300 psig maximum steam pressure.

Self-Powered Operation

Steam does the work. No outside energy source is required to operate a Sarco 25-Series Regulator. Only exceptions are the electrical signal required when an electric pilot is used or air with the PA pilot.

100% Testing

Sarco tests every 25-Series Regulator before it leaves our plant. You get a product that is ready for immediate installation. There is nothing so effective as 100% testing to save you money on the job by preventing troublesome delays during installation, initial start-up and operation.

A versatile family of self-powered regulators to control steam and conserve energy. With control pilots for every application and interchangeable main valves. Regulate temperature to prevent overheating, reduce steam pressure for safe and economical plant operation, and up to three pilots can be combined on a single valve for a dependable yet economical multiple control installation.

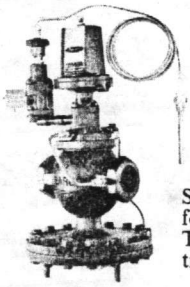

Sarco 25 PTE Regulator for combination Pressure-Temperature on/off control of steam flow.

—*see page* 6

Use a Sarco 25T Temperature Regulator wherever steam is used for heating. A pilot operated regulator of this type prevents wasteful overheating and assures sensitive, accurate control of temperature.

The 25T is entirely self-powered—needs no electricity or compressed air. It shuts off tight on no load, is reliable and trouble-free.

Typical applications include steam water heaters—storage, instantaneous heat exchangers and converters—air handling coils, tank heating coils, jacketed vessels, steam chests, molds and platens.

—*see page* 10

For most economical operation steam should be used at the lowest pressure that will satisfy the temperature requirement of the application. The 25P is a reliable, accurate regulator to reduce steam from a high pressure supply to its most efficient lower pressure and to protect expensive equipment from dangerously high pressures. Steam coils, jackets, steam chests, drums, conveyor screws—whatever the steam space may be—can be supplied through a 25P pressure reducing valve with steam of the pressure and temperature at which this equipment is designed to operate best.

—*see page* 14

Energy savings can be made by using a 25E to supply steam to a process or heating area only when it is required. Controlled only by an electric pilot, the main valve opens wide when the pilot responds to an electrical signal—closes tight when the pilot is de-energized. The Type 25E valve does not modulate or throttle steam flow at part load. It is for on-off service only.

Typical applications include remote control of steam flow in response to manual or automatic signals. A pressure or temperature sensing element or an electric timer may provide operating signals. The 25E can synchronize steam flow with pumps or other equipment. It will respond to elaborate computer-generated control signals. It is often used as a fail-safe shutoff to back up other steam controls.

—*see page* 15

While its electric pilot is energized, the 25TE operates as a thermostatic temperature regulator. When the electric pilot is de-energized the valve closes tight to prevent unnecessary heat loss or steam usage when steam is not required.

Applications are the same as those for the Sarco 25T—water heaters, air heaters, process heating systems and the like. However, the 25TE adds a remote shutoff capability. It can respond to program timers, to safety switches of any kind or to remote manual switches. This valve is ideally suited to automatic heating or processing systems when interlocking circuits for cyclic function or limit controls are required.

—*see page* 15

While its electric pilot is energized, the 25PE operates as a pressure reducing valve. When the electric pilot is de-energized the valve closes tight to prevent needless heat loss or steam usage when the equipment is not in service.

The most common type of application of the 25PE is for remote control of a pressure reducing system. On-off electrical signals may originate at safety switches, timers or manual switches.

The 25PE is also used to supply pressure-regulated steam to equipment in which temperature is maintained via pressure instead of thermostatically. The electric pilot then serves as a remote manual control, as a safety device, or for cycle control.

—*see page* 16

A Pressure-Temperature Regulator combines automatic temperature control with the economy of using low pressure steam direct from a high pressure supply. The Sarco 25PT Pressure and Temperature Regulator eliminates any need for a separate pressure reducing valve and a temperature regulator.

It operates normally in response to its thermostatic temperature pilot. It protects the coils, jacket or steam chest of the heating system against dangerously high pressures too.

Whenever the call-for-heat signal would result in excessive delivery pressure, the PT throttles automatically, limiting the pressure delivered by the valve to the pre-set level of its pressure pilot. Thus, a 25PT permits the economies of a high-pressure steam supply without the added cost of an extra reducing valve at the point of steam utilization. This combination regulator also provides economies by using less piping, fittings, space, and requires less maintenance than individual valves.

Typical applications include steam water heaters, pasteurizers, air handling coils, jacketed vessels, steam-heated conveyor screws, steam chests, dryer drums and special processing equipment.

—see page 18

While the electric pilot is energized and downstream pressure does not exceed its set point, the 25PTE operates as a temperature regulator. When the electric pilot is de-energized, the valve closes tight to prevent unnecessary heat loss or usage when steam is not required. When downstream pressure approaches the set point of the pressure pilot, the main valve throttles steam flow so that downstream pressure does not exceed that set point.

Applications are usually based on temperature regulation as the primary operating mode. Pasteurization is a typical example. The pressure reducing feature protects steam - utilization equipment rated for a lower pressure than that available from the steam-distribution system and provides more economical operation. The electrical override can be used in many ways. It can serve as an emergency shutdown. It can be used for programming, for remote manual control or for switchover when alternate zone heating systems are provided.

—See Type 25P data for sizing, capacities and dimensions.

The 25PA is the most convenient way to remotely control a reduced steam pressure. The adjustable air valve is installed in any location and its output adjusted to obtain any desired steam pressure from zero to the maximum range that the available air loading pressure will produce. To obtain higher reduced pressures when dead-end shutoff is not required, an optional internal PA pilot spring can be set to deliver some constant reduced pressure. The available air loading pressure range can then be used to obtain any higher reduced pressures that may be required.

Desired Steam Pressure*	Required Air Pressure
5	13
25	33
50	58
100	103

*150 psi inlet, no internal spring, 1" valve.

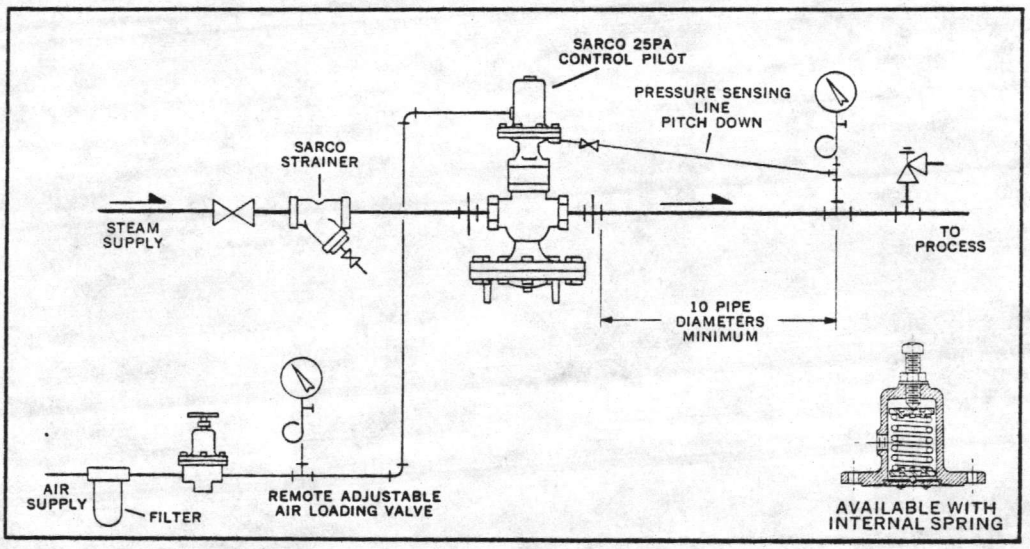

Reducing Steam Pressure Remotely Using 25PA Valve.

See Type 25P data for sizing, capacities and dimensions.

A remotely mounted pressure pilot coupled with a 260°—360°F temperature scale which allows rapid changes of reduced steam pressure. Used on platens, paperboard machinery, etc., where surface temperatures are pressure controlled and change with production runs.

For more accessible adjusting, any pilot, or combination, can be remotely mounted from the main valve. Steam must be piped to pilot location and returned to main valve.

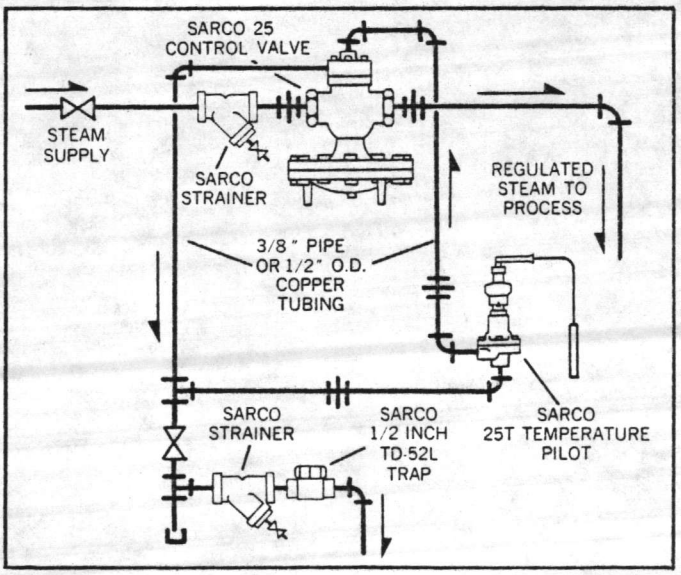

Piping Hook-up for Remote Operation of Sarco 25TRM Temperature Regulator. 25PRM requires pressure sensing line connection to downstream piping.

The 25T Temperature Regulator prevents wasteful overheating and provides automatic temperature control of heat exchangers, coils and all steam heated equipment.

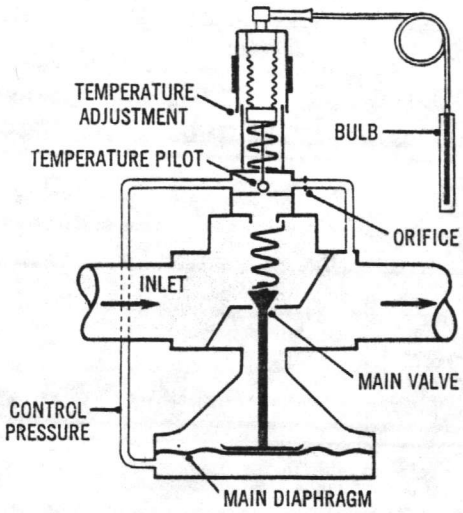

Normal positions before startup are with the main valve closed and the pilot valve held open by spring force. Entering steam passes through the pilot valve into the diaphragm chamber and out through the control orifice. As flow through the pilot valve exceeds flow through the orifice, control pressure increases in the diaphragm chamber, and that opens the main valve. As the medium being heated approaches the pre-selected temperature, liquid in the bulb expands through the capillary tubing into the bellows and throttles the pilot valve. Control pressure maintained in the diaphragm chamber positions the main valve to deliver required steam flow. When heat is not required the main valve closes tight to provide dead-end shutoff. The temperature setting can be changed by turning the calibrated adjustment dial.

Select a Thermostat Bulb Style and Temperature Range which best suits the application, then determine the valve size required to meet the steam capacity load. Satisfactory temperature control and low regulator maintenance depend on sizing each regulator valve correctly for its intended application.

Too large a regulator may tend to hunt or it may operate for long periods with the main valve just barely cracked open. Wire drawing—the erosive scouring of high-velocity steam —can subject an oversized valve seat to premature wear.

Too small a regulator will not meet peak heating load requirements. It will increase the time a system requires for coming up to temperature during startup.

Size of the regulator should be determined by actual steam capacity requirements—not by pipe sizes in the system. For most applications, regulator size will be smaller than the sizes of connected piping.

Determining Steam Capacity

For heating water with steam

$$\text{lbs. of steam/hr.} = \frac{\text{GPM}}{2} \times \text{temp. rise } ^\circ\text{F}$$

For heating fuel oil with steam

$$\text{lbs. of steam/hr.} = \frac{\text{GPM}}{4} \times \text{temp. rise } ^\circ\text{F}$$

For heating air with steam coils

$$\text{lbs. of steam/hr.} = \frac{\text{CFM}}{900} \times \text{temp. rise } ^\circ\text{F}$$

For radiation

$$\text{lbs. of steam/hr.} = \frac{\text{sq. ft. EDR}}{4}$$

How to size the valve

Proper valve sizing requires the following information:

(1) The steam capacity required for the application in pounds per hour.

(2) Inlet supply pressure of the steam taken immediately ahead of the valve.

(3) Outlet steam pressure from the allowable pressure drop across the valve.

Where it is impossible to calculate the pressure drop, 35% to 40% of the gage supply pressure can be used as a reasonable approximation. Noise level increases with the pressure drop, install valve with properly sized piping.

Example

Determine what size Sarco 25T Temperature Regulator Valve will be required for an instantaneous water heater heating 20 GPM of water from 60° to 160°F. Steam supply pressure at the heater is 75 psig. Permissible drop across the valve is 20 psi.

Solution: Using formula for heating water

$$\text{lbs. of steam/hr.} = \frac{\text{GPM}}{2} \times \text{temp. rise } ^\circ\text{F}$$

$$= \frac{20}{2} \times 100$$

$$= 1{,}000 \text{ lbs./hr.}$$

From the capacity chart on page 8, look in the first column for 75 psig inlet pressure. In second column find 55 psig downstream pressure (75 psig inlet less 20 psi permissible drop). Follow a horizontal line to the sixth column where we find that a 1″ valve is required to supply no less than 1,000 pounds per hour.

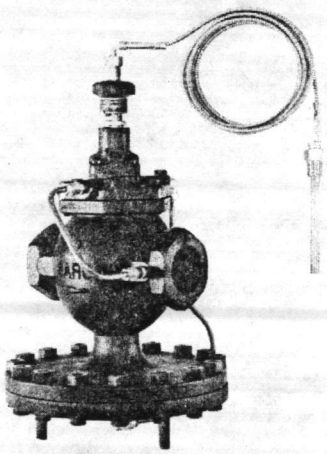

Sarco 2″ 25T-2 Temperature Regulator.

How to order

When ordering a Sarco 25T Temperature Regulator, please include all of the following information

valve size by nominal pipe/flange size

body construction of cast iron or cast steel

type of control—25T for thermostatic temperature regulation

style of thermostatic bulb

length of capillary tubing

temperature adjustment range

steam supply pressure. Specify low pressure pilot when inlet pressure for flanged sizes is 15 psig or below

intended application

For example: Sarco 1″ Cast Iron Temperature Regulator Type 25T-2 with 8 feet of tubing, temperature range of 120° to 180°F, 75 psig steam, for storage water heater.

THERMOSTAT BULB STYLES AND RANGES

STANDARD TEMPERATURE ADJUSTMENT SCALE RANGES

Fahrenheit

60° to 120°F
100° to 160°F
120° to 180°F
160° to 220°F
200° to 260°F

Centigrade

15° to 50°C
40° to 70°C
50° to 80°C
70° to 105°C
95° to 125°C

Other ranges spanning any 60°F interval between 0° and 300°F are available on special order at additional cost.

NOTE—Maximum working temperature of 25T pilot is 450°F/232°C and bulb temperature may not exceed 350°F/177°C.

Style No.	Description	Dimensions
T-1	Plain copper bulb, 8-foot brass-armored capillary tubing	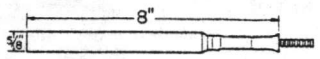
T-2	Copper bulb, union connection, 8-foot brass-armored capillary tubing.	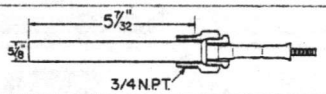
T-3	Teflon-covered bulb, 8-foot Teflon-covered capillary tubing	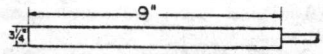
T-4	Plain copper bulb, flanged connection with adjustable extension, 8-foot brass-armored capillary tubing	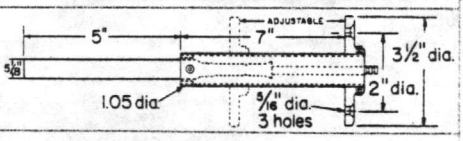
T-5	Copper bulb, union connection with brass well, 8-foot brass-armored capillary tubing	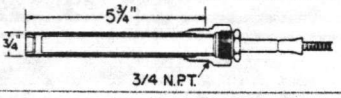
T-6	Copper bulb, union connection with Type 316 stainless steel well, 8-foot brass-armored capillary tubing	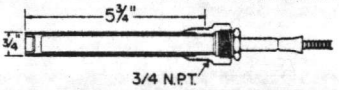
T-7	Plain copper bulb, brass extension well*, 8-foot brass-armored capillary tubing	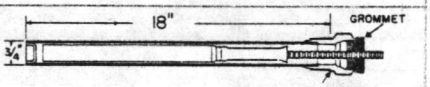
T-8	Plain copper bulb, Type 316 stainless steel extension well*, 8-foot brass-armored capillary tubing	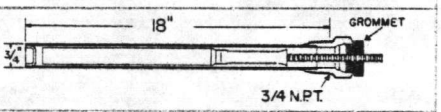
T-9	Plain copper bulb, stainless steel wall mounting bracket, 8 foot brass-armored capillary tubing	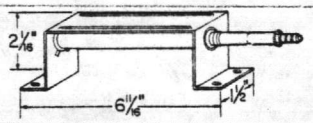
T-10	Plain stainless steel bulb. Stainless steel tubing.	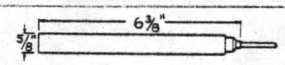
T-11	Stainless steel bulb union connection. 8' Stainless steel tubing.	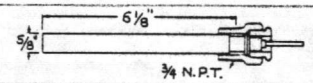
T-12	Union extension plus bulb assembly with 90° Offset, 8-foot brass-armored capillary tubing.	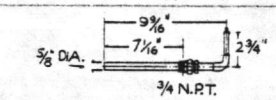

*Standard extension wells are 18" long. Longer wells in brass or stainless steel are available.

Standard capillary tubing length is 8 feet. The next standard is 15 feet, and additional lengths can be furnished on request.

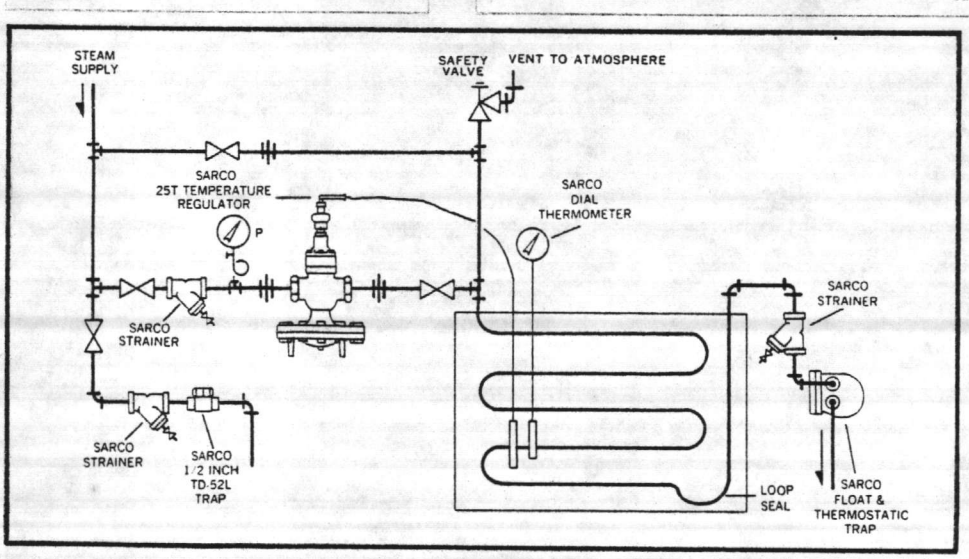

25T Temperature Regulator controlling temperature of plating, dyeing or process tanks.

pounds of saturated steam per hour

INLET STEAM PRESSURE, PSIG	OUTLET STEAM PRESSURE PSIG	NOMINAL VALVE SIZE ½"S	½"	¾"	1"	1¼"	1½"	2"	2½"	3"	4"	6"
C.V. FACTORS		1.16	3.48	6.5	10.5	14	20	35	56	74	115	260
	0	15	45	85	140	180	260	455	725	960	1,490	
	0	19	55	105	170	225	320	560	900	1,185	1,840	
	2	20	57	106	171	228	326	572	915	1,200	1,875	
	1	23	70	131	211	282	405	705	1,125	1,490	2,310	
	4	21	63	117	189	252	360	630	1,010	1,330	2,070	
	2	27	81	151	245	326	466	815	1,300	1,725	2,680	
	5	29	86	160	260	345	495	865	1,385	1,830	2,840	
	3	37	110	205	332	442	632	1,105	1,770	2,340	3,635	
	7	29	90	167	270	360	515	990	1,445	1,910	2,965	
	4	43	128	238	386	515	735	1,285	2,060	2,720	4,225	
	10	30	95	175	285	380	540	950	1,500	2,000	3,100	7,000
	8	37	110	210	335	450	640	1,120	1,795	2,370	3,680	8,320
	5	45	135	250	405	545	780	1,365	2,185	2,890	4,480	10,170
	15	34	101	190	310	410	585	1,025	1,640	2,165	3,365	7,600
	10	47	140	265	425	570	810	1,420	2,270	3,000	4,660	10,530
	0-5	60	180	335	540	720	1,025	1,795	2,870	3,790	5,895	13,325
	20	36	107	200	325	430	650	1,080	1,725	2,280	3,545	8,000
	15	50	145	270	435	580	830	1,450	2,325	3,070	4,770	10,790
	0-7	70	205	385	620	825	1,180	2,065	3,305	4,360	6,785	15,340
	24	41	125	230	374	500	715	1,250	1,995	2,640	4,100	9,270
	18	65	195	365	590	785	1,120	1,960	3,135	4,245	6,440	14,560
	0-12	75	230	430	695	925	1,320	2,310	3,695	4,885	7,590	17,160
	34	45	97	255	410	545	780	1,365	2,180	2,885	4,480	10,135
	24	86	256	478	772	1,030	1,470	2,570	4,115	5,440	8,450	19,110
	0-18	95	280	525	850	1,135	1.620	2,835	4,535	5,995	9,315	21,060
	42	57	170	320	515	690	985	1,720	2,755	3,640	5,660	12,790
	35	95	275	515	830	1,105	1,580	2,765	4,425	5,850	9,085	20,540
	0-21	115	350	650	1,050	1,400	2,000	3,500	5,600	7,400	11,500	26,000
	50	69	210	385	625	835	1,190	2,085	3,330	4,400	6,845	15,475
	40	110	235	610	990	1,315	1,880	3,290	5,265	6,955	10,810	24,400
	0-27	130	385	720	1,165	1,555	2,220	3,885	6,215	8,215	12,765	28,860
	65	75	225	420	675	900	1,285	2,250	3,600	4,760	7,400	16,735
	55	122	365	685	1,110	1,475	2,110	3,695	5,910	7,810	12,135	27,430
	0-35	155	470	875	1,415	1,890	2,700	4,725	7,560	9,990	15,525	35,100
	85	102	305	575	925	1,235	1,765	3,085	4,940	6,525	10,140	22,925
	75	155	460	865	1,395	1,860	2,660	4,655	7,450	9,840	15,295	34,580
	0-48	200	600	1,120	1,815	2,420	3,460	6,055	9,690	12,800	19,895	45,000
	110	110	335	625	1,000	1,345	1,920	3,360	5,375	7,100	11,040	24,960
	90	205	615	1,150	1,860	2,480	3,540	6,195	9,910	13,100	20,355	46,000
	0-62	245	730	1,365	2,220	2,940	4,200	7,350	11,760	15,540	24,150	54,600
	130	140	425	790	1,280	1,700	2,440	4,265	6,825	9,000	14,000	31,680
	105	255	760	1,410	2,290	3,050	4,360	7,630	12,210	16,130	25,100	56,700
	0-76	285	860	1,600	2,590	3,460	4,940	8,645	13,830	18,280	28,400	64,220
	155	150	450	840	1,360	1,810	2,585	4,525	7,240	9,570	14,870	33,600
	120	300	910	1,700	2,740	3,655	5,220	9,135	14,620	19,310	30,000	67,860
	0-87	330	985	1,840	2,970	3,960	5,660	9,900	15,850	20,950	32,545	73,580
	170	215	645	1,200	1,950	2,600	3,700	6,490	10,380	13,700	21,300	48,200
	140	330	980	1,830	2,960	3,950	5,640	9,870	15,800	20,870	32,430	73,320
	0-103	375	1,125	2,100	3,390	4,520	6,460	11,300	18,000	23,900	37,145	83,980
	210	285	850	1,590	2,450	3,430	4,900	8,575	13,700	18,130	28,200	63,700
	175	410	1,220	2,280	3,685	4,920	7,020	12,280	19,660	25,980	40,365	91,260
	0-131	460	1,385	2,590	4,180	5,570	7,960	13,930	22,300	29,450	45,800	103,500
	225	290	880	1,640	2,650	3,530	5,050	8,830	14,130	18,670	29,000	
	200	415	1,240	2,320	3,750	4,990	7,130	12,480	19,980	26,400	41,000	
	0-145	505	1,510	2,830	4,570	6,090	8,700	15,230	24,360	32,200	50,000	
	250	310	920	1,720	2,780	3,700	5,290	9,250	14,800	19,600	30,400	
	225	415	1,250	2,330	3,770	5,020	7,170	12,550	20,100	26,500	41,300	
	0-160	550	1,640	3,070	4,960	6,600	9,440	16,520	26,400	34,900	54,300	

† Specify low pressure pilot for 2½", 3" and 4" at inlet pressures of 15 psig and below. 6" size not recommended below 15 psig.

* Cast steel construction required for service above 250 psig.

Capacities are based on using pipe sizes to insure reasonable steam velocities. Refer to pipe sizing chart Page 19.

DIMENSIONS

SIZE	A		A^1		B		C		D		E		Approx. Weight Cast Iron		Cast Steel	
Screwed	in.	mm	in.	mm	in.	mm	in.	mm	in.	mm	in.	mm	Lb.	Kg.	Lb.	Kg.
½″	5½	140			7⅜	194	9 13/16	249	6 3/16	157	16	406	27	12.2	30	13.6
¾″	5½	140			7⅜	194	9 13/16	249	6 3/16	157	16	406	27	12.2	30	13.6
1″	6	152			8⅝	219	9¾	248	6¾	171	16½	419	34	15.4	37	16.8
1¼″	7¼	184			8⅝	219	10 5/16	262	7 1/16	179	17⅜	441	39½	17.9	43	19.5
1½″	7¼	184			8⅝	219	10 5/16	262	7 1/16	179	17⅜	441	39½	17.9	43	19.5
2″	8½	216			10⅝	270	10 13/16	262	8 3/16	208	19⅛	486	64	29.0	70	31.8
Flanged	125 Lb.		250 & 300 Lb.													
2½″	10⅞	276	11½	292	13⅜	346	11 11/16	297	13 13/16	354	25⅝	651	152½	69.2	166	75.3
3″	11¾	298	12½	318	13⅜	346	11 9/16	294	14 7/16	367	26	660	183½	83.2	200	90.7
4″	13⅞	352	14½	368	15⅜	397	12 13/16	325	16⅛	410	28 15/16	735	279½	127	305	138
6″	18⅛	460	19	483	19¾	502	9 9/16	243	16 11/16	424	26¼	667	560	254		

In the 2½″ to 6½″ sizes, dimension A is for 125 lb. flanged, and dimension A^1 is for 250 lb. cast iron and 300 lb. cast steel flanged (except 6″ size cast iron only). Weights are for 250 lb. or 300 lb. flanged bodies. All weights include T-2 thermostat.

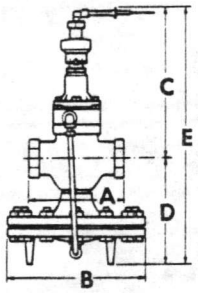

½″ to 2″ sizes have screwed connections

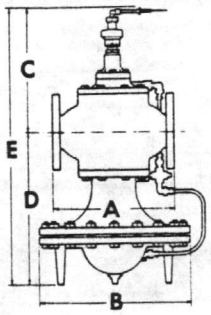

2½″ to 4″ sizes have flanged connections

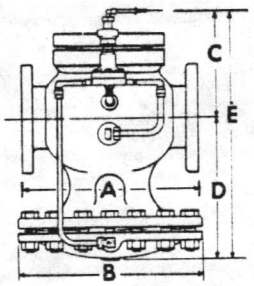

6″ size has flanged connections. Not available in cast steel

Piping layout should be planned so that the regulator valve will be on a horizontal run with bypass piping provided so that the system can be operated under manual control while the regulator is isolated for servicing.

Pipe Sizes should be determined on the basis of steam flow requirements. The regulator valve, sized from the table on page 8, is likely to be smaller than outlet piping and may be smaller than inlet piping.

A steam trap must be installed ahead of the regulator valve to prevent condensate from reaching the regulator. A Sarco ½″ TD-52L Thermo- Dynamic trap is recommended. The trap and regulator should both be protected with a strainer.

The thermostatic bulb should be carefully located in the medium being heated. Make sure that the entire length of the thermostatic bulb is immersed in the heated medium with good circulation over it. Locate the thermometer being used to monitor temperature close to the thermostatic bulb. When the bulb is contained in a well use a heat conducting compound to improve response time.

Forced recirculation is required for good control of an instantaneous water heater or a heat exchanger that has its thermostatic bulb located in the discharge line.

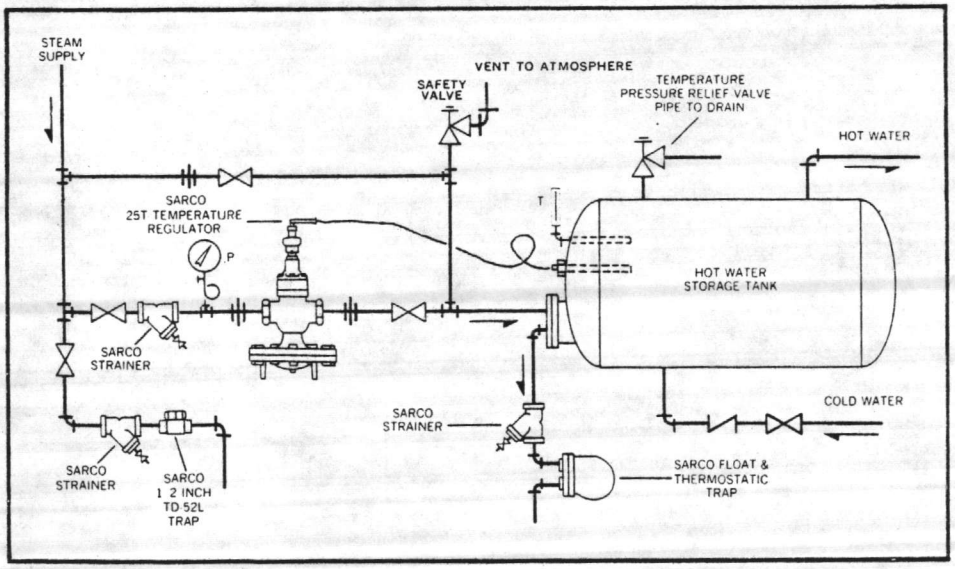

Diagram shows typical water heater installation.

PRESSURE REDUCING VALVE TYPE 25P

The 25P is an accurate, reliable regulator that allows steam from a high pressure supply to be used at a more economical low pressure, and protects valuable equipment from overpressure.

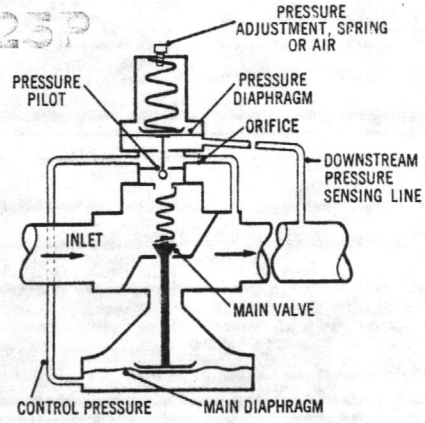

HOW THE 25P, 25PA & 25PI WORK

Normal positions before start-up are with the main valve closed and the pilot valve held open by spring force or air pressure. Entering steam passes through the pilot valve into the main diaphragm chamber and out through the control orifice. As flow through the pilot valve exceeds flow through the orifice, control pressure increases in the diaphragm chamber, and that opens the main valve. As steam flows through the main valve, the increase in downstream pressure feeds back through the pressure sensing line to the underside of the pressure diaphragm. When the force below that diaphragm balances the compression force of the spring above it, the pilot valve throttles. The control pressure maintained in the main diaphragm chamber positions the main valve to deliver just enough steam for the desired delivery pressure. Adjustment of the spring or air pressure above the pressure diaphragm changes the downstream pressure set point. When steam is not longer required, the Sensing Line pressure increases closing the pressure pilot and the control pressure bleeds back through the control orifice. This allows the main valve to hold the desired reduced pressure and it may close tight for a dead-end shutoff.

HOW TO SIZE AND INSTALL THE 25P PRESSURE REDUCING VALVE

From the inlet and reduced pressure conditions select the standard or reduced port valve, from page 12 or 13, which meets the actual steam capacity requirements. Reduced port valves have less capacity for lower steam velocities through the valve. Satisfactory performance and low maintenance depends on selecting the valve correctly. An undersized valve will not be able to hold the reduced pressure under maximum load conditions. An oversized valve may hunt because the main valve will be barely cracked open, and can subject the valve seat and head to premature wear.

Complete the valve section with the pilot Valve Spring Color which meets the downstream pressure condition.

How to order

When ordering a Sarco 25P Pressure Reducing Valve, please include all the following data:

- valve size by nominal pipe/flange size
- body construction of cast iron or cast steel
- type of control—25P for pressure reduction
- steam supply pressure
- reduced pressure range and color of pilot valve spring selected
- intended application

For example: Sarco 1'' Cast Iron Pressure Reducing Valve Type 25P for 150 psig inlet pressure, yellow spring for 3 to 30 psig reduced pressure, for 15 psig process heating.

Piping layout should be planned so that the reducing valve will be on a horizontal run with bypass piping provided so that the system can be operated under manual control while the reducing valve is isolated for servicing.

Pipe sizes should be determined on the basis of steam velocity and sized from the table on page 19. The reducing valve, sized from the table on page 12 or 13, is likely to be smaller than inlet piping and will almost always be smaller than downstream piping.

PILOT VALVE SPRING RANGES

Downstream Pressure	Color Code
3 to 30 psig	YELLOW
20 to 100 psig	BLUE
80 to 250 psig	RED

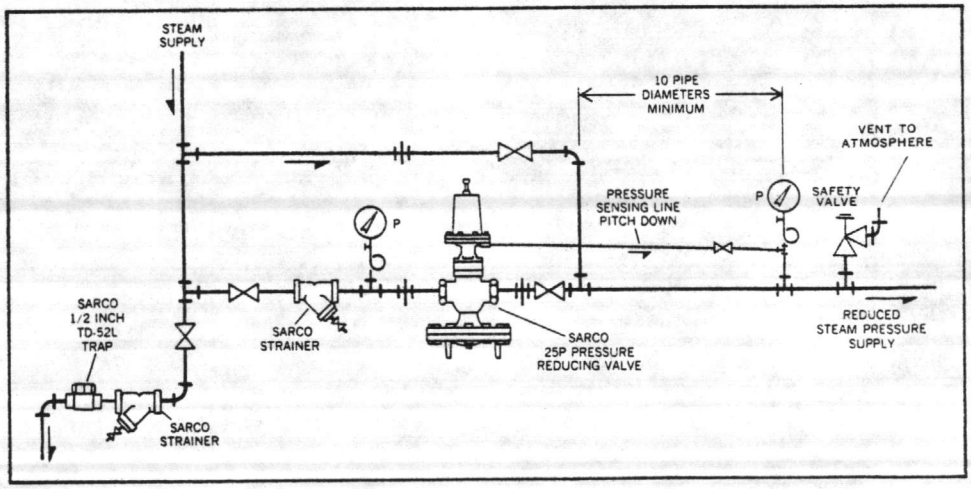

Essentials of a pressure reducing station are shown here diagrammatically.

DIMENSIONS AND WEIGHTS, 25P, 25PA & 25PI

SIZE	DIMENSIONS												Approx. Weight			
	A		A[1]		B		C*		D		E*		Cast Iron		Cast Steel	
Screwed	in.	mm	in.	mm	in.	mm	in.	mm	in.	mm	in.	mm	Lb.	Kg.	Lb.	Kg.
½″	5½	140			7⅝	194	12⅜₁₆	310	6⅜₁₆	157	18⅜	467	32	14.5	35	15.9
¾″	5½	140			7⅝	194	12⅜₁₆	310	6⅜₁₆	157	18⅜	467	32	14.5	35	15.9
1″	6	152			8⅝	219	12⅛	308	6¾	171	18⅞	479	39	17.7	43	19.5
1¼″	7¼	184			8⅝	219	12¹¹⁄₁₆	322	7⅛₁₆	179	19¾	502	44	20.0	48	21.8
1½″	7¼	184			8⅝	219	12¹¹⁄₁₆	322	7⅛₁₆	179	19¾	502	44	20.0	48	21.8
2″	8½	216			10⅝	270	13⅜₁₆	338	8⅜₁₆	208	21½	546	69	31.3	75	34.0
Flanged	125 Lb.		250 & 300 Lb.													
2½″	10⅞	276	11½	292	13⅝	346	14	356	13¹⁵⁄₁₆	354	27¹⁵⁄₁₆	710	157	71.2	171	77.6
3″	11¾	298	12½	318	13⅝	346	13¹⁵⁄₁₆	354	14⅞₁₆	367	28⅜	721	188	85.3	205	93.0
4″	13⅞	352	14½	368	15⅝	397	15¼	387	16⅛	410	31⅜	797	284	129	309	140
6″	18⅛	460	19	483	19¾	502	11⅞	302	16¹¹⁄₁₆	424	28⅝₁₆	725	560	254		

In the 2½″ to 6″ sizes, Dimension A is for 125 Lb. flanged, and Dimension A[1] is for 250 Lb. Cast Iron and 300 Lb. Cast Steel flanged (except 6″ size Cast Iron only). Weights are for 250 Lb. or 300 Lb. flanged bodies. All Type PA valves are 1 Lb. less than chart amount.

*1¹⁵⁄₁₆″ less for Type PA without internal spring. Add 1″ for Type PI Scale.

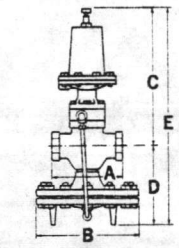

½″ to 2″ sizes have screwed connections

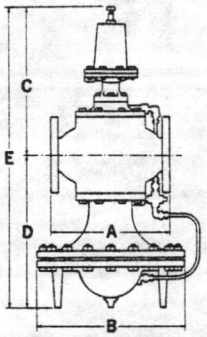

2½″ to 4″ sizes have flanged connections

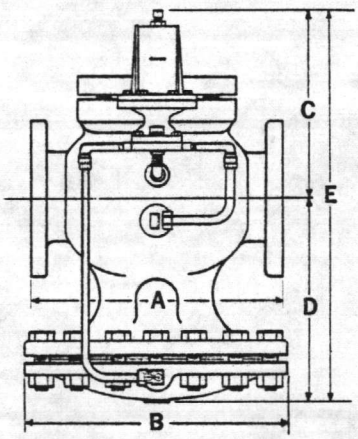

6″ size has flanged connections. Not available in cast steel

A steam trap must be installed ahead of the reducing valve to remove condensate before it reaches the regulator. A Sarco ½″ TD-52L Thermo-Dynamic trap is recommended. The steam trap and regulator both should be protected with a strainer.

The pilot line that senses downstream pressure should be connected to a straight section of pipe for a minimum of 10 pipe diameters downstream from the nearest elbow, tee, valve or other restriction. It should enter the top of the pipe and should be pitched to drain away from the pressure pilot. If the pressure reducing valve serves only one piece of equipment, its pilot line—properly pitched for drainage—can be connected to the steam space of that equipment. Wherever the pilot line is connected, a pressure gage should be connected close beside it to measure the same pressure.

Parallel Installation

If loads vary widely, or if peak loads exceed the largest reducing valve size, install two reducing valves in parallel. Set for slightly different reduced pressures, they will operate in sequence. The one set at the higher pressure will handle light loads with less tendency toward hunting than one large valve in the cracked-open position. As capacity requirement increases, downstream pressure will drop slightly, and the second valve will come into service. A reduction in demand reverses the same sequence. Valves should be sized for 1/3 and 2/3 load so that the sum of their capacities equals the peak steam demand of the system. An added benefit of this arrangement is that either valve can usually be taken out of service for inspection or maintenance without interrupting system operation.

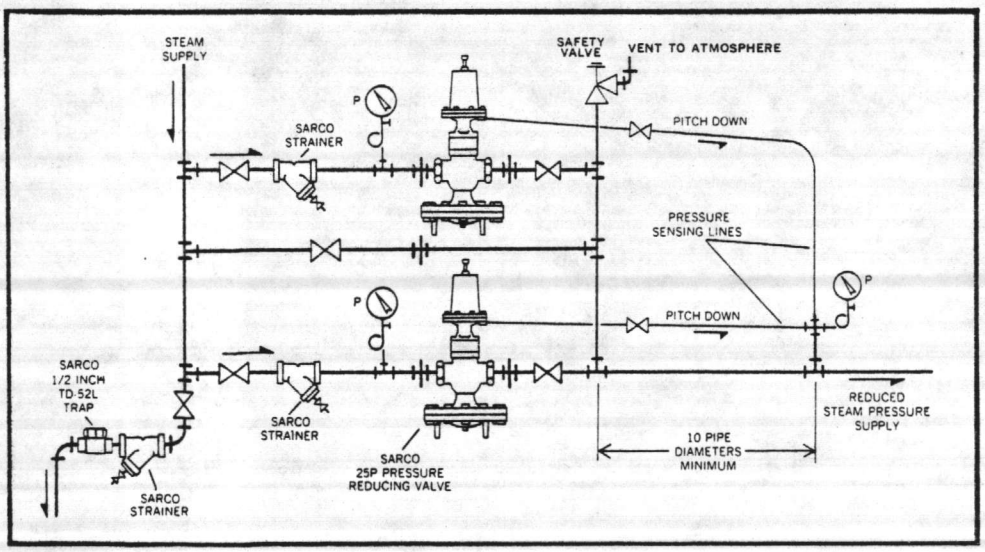

In a parallel installation, two 25P reducing valves have slightly different pressure settings so that they open sequentially. Diagrammed here in a vertical arrangement, they are usually installed side by side.

pounds of saturated steam per hour

INLET STEAM PRESSURE, PSIG	OUTLET STEAM PRESSURE, PSIG	NOMINAL VALVE SIZE ½"	¾"	1"	1¼"	1½"	2"	2½"	3"	4"	6"
C. V. FACTORS		3.48	6.5	10.5	14	20	35	56	74	115	260
	10	95	175	285	380	540	950	1,500	2,000	3,100	7,000
	5	135	250	405	545	780	1,365	2,185	2,890	4,480	10,170
	3	155	285	465	620	880	1,550	2,470	3,260	5,080	11,440
	12	120	230	365	490	700	1,225	1,960	2,590	4,025	9,100
	8	155	290	470	630	900	1,575	2,520	3,330	5,175	11,700
	0-5	180	335	540	720	1,025	1,795	2,870	3,790	5,895	13,325
	15	145	270	435	580	830	1,450	2,325	3,070	4,770	10,790
	10	195	360	580	775	1,110	1,950	3,110	4,110	6,385	14,430
	0-7	205	385	620	825	1,180	2,065	3,305	4,360	6,785	15,340
	20	155	290	470	630	900	1,575	2,520	3,330	5,175	11,700
	15	220	410	665	890	1,270	2,220	3,555	4,700	7,300	16,510
	0-12	230	430	695	925	1,320	2,310	3,695	4,885	7,590	17,160
	30	155	290	470	630	900	1,575	2,520	3,330	5,175	11,700
	25	250	470	755	1,010	1,440	2,520	4,030	5,330	8,280	18,720
	0-18	280	525	850	1,135	1,620	2,835	4,535	5,995	9,315	21,060
	40	190	355	575	770	1,100	1,925	3,080	4,070	6,325	14,300
	30	315	585	955	1,275	1,820	3,185	5,095	6,735	10,465	23,660
	0-21	350	650	1,050	1,400	2,000	3,500	5,600	7,400	11,500	26,000
	45	280	520	840	1,120	1,600	2,800	4,480	5,920	9,200	20,800
	35	360	670	1,080	1,440	2,060	3,605	5,770	7,620	11,845	26,780
	0-27	385	720	1,165	1,555	2,220	3,885	6,215	8,215	12,765	28,860
	60	280	525	850	1,135	1,620	2,835	4,535	5,995	9,315	21,060
	50	415	775	1,250	1,665	2,380	4,165	6,665	8,800	13,685	30,940
	0-35	470	875	1,415	1,890	2,700	4,725	7,560	9,990	15,525	35,100
	70	290	540	870	1,160	1,660	2,905	4,650	6,140	9,545	21,580
	50	490	915	1,480	1,975	2,820	4,935	7,895	10,435	16,215	36,660
	0-43	515	960	1,555	2,070	2,960	5,180	8,290	10,950	17,020	38,480
	80	370	690	1,115	1,485	2,120	3,710	5,935	7,845	12,190	27,560
	60	580	1,080	1,740	2,325	3,320	5,810	9,295	12,285	19,090	43,160
	0-48	600	1,120	1,815	2,420	3,460	6,055	9,690	12,800	19,895	45,000
	100	440	825	1,335	1,780	2,540	4,445	7,110	9,400	14,600	33,000
	80	680	1,275	2,060	2,745	3,920	6,860	10,975	14,500	22,540	50,960
	0-62	730	1,365	2,200	2,940	4,200	7,350	11,760	15,540	24,150	54,600
	125	490	910	1,470	1,960	2,800	4,900	7,840	10,360	16,100	36,400
	100	800	1,490	2,400	3,205	4,580	8,015	12,825	16,945	26,335	59,540
	0-76	860	1,600	2,590	3,460	4,940	8,645	13,830	18,280	28,400	64,220
	150	490	915	1,480	1,975	2,820	4,935	7,895	10,435	16,215	36,660
	125	870	1,630	2,635	3,515	5,020	8,785	14,055	18,570	28,865	65,260
	0-87	985	1,840	2,970	3,960	5,660	9,900	15,850	20,950	32,545	73,580
	150	840	1,600	2,540	3,390	4,840	8,470	13,550	17,900	27,830	65,920
	125	1,075	2,000	3,240	4,330	6,180	10,815	17,300	22,870	35,530	80,340
	0-103	1,125	2,100	3,390	4,520	6,460	11,300	18,000	23,900	37,145	83,980
	175	880	1,650	2,670	3,560	5,080	8,890	14,225	18,800	29,210	66,000
	150	1,160	2,180	3,500	4,660	6,660	11,655	18,650	24,640	38,300	86,600
	0-117	1,250	2,340	3,780	5,000	7,200	12,600	20,160	26,640	41,400	93,600
	200	925	1,730	2,790	3,720	5,320	9,300	14,900	19,680	30,600	69,200
	150	1,340	2,500	4,050	5,400	7,720	13,500	21,600	28,600	44,400	100,360
	0-131	1,385	2,590	4,180	5,570	7,960	13,930	22,300	29,450	45,800	103,500
	225	880	1,640	2,650	3,530	5,050	8,830	14,130	18,670	29,000	
	200	1,240	2,320	3,750	4,990	7,130	12,480	19,980	26,400	41,000	
	0-145	1,510	2,830	4,570	6,090	8,700	15,230	24,360	32,200	50,000	
	250	920	1,720	2,780	3,700	5,290	9,250	14,800	19,600	30,400	
	225	1,250	2,330	3,770	5,020	7,170	12,550	20,100	26,500	41,300	
	0-160	1,640	3,070	4,960	6,600	9,440	16,520	26,400	34,900	54,300	

*Cast steel construction required for service above 250 psig.

Capacities are based on an accuracy of regulation of 1. P.S.I. and with pipe sizes to insure reasonable steam velocities. Refer to pipe sizing Chart Page 19.

Bold faced numbers in outlet steam pressure column indicate pressures at which maximum capacity occurs. Lower outlet pressures do not increase valve capacity.

pounds of saturated steam per hour

capacities matched to nominal valve sizes for lower steam velocities

INLET STEAM PRESSURE, PSIG	OUTLET STEAM PRESSURE, PSIG	NOMINAL VALVE SIZE ½''S	¾''S	1''S	1¼''S	1½''S	2''S	2½''S	3''S	4''S	6''S
C. V. FACTORS		1.16	2.4	4.6	6.5	11.6	18.5	26	37	64	185
	10	30	65	125	175	315	505	695	1,000	1,730	5,000
	5	45	95	175	250	450	720	1,015	1,440	2,500	7,200
	3	50	110	205	285	510	820	1,150	1,630	2,795	8,125
	12	40	85	160	230	405	650	920	1,300	2,225	6,460
	8	50	110	210	290	520	825	1,170	1,655	2,825	8,300
	0-5	60	125	235	335	600	955	1,330	1,915	3,265	9,460
	15	50	100	190	270	485	770	1,085	1,540	2,630	9,080
	10	65	135	255	360	640	1,025	1,435	2,040	3,550	10,250
	0-7	70	145	270	385	685	1,090	1,555	2,210	3,775	11,000
	20	50	110	210	290	520	825	1,170	1,655	2,825	8,300
	15	75	150	290	410	735	1,175	1,660	2,350	4,000	11,725
	0-12	80	160	305	430	760	1,220	1,715	2,435	4,225	12,185
	30	50	110	210	290	520	825	1,170	1,655	2,825	8,300
	25	85	175	335	470	835	1,360	1,870	2,665	4,640	13,300
	0-18	95	200	370	525	935	1,500	2,100	2,985	5,185	14,960
	40	65	130	250	355	640	1,015	1,430	2,085	3,565	10,150
	30	105	220	420	585	1,045	1,670	2,350	3,330	5,825	16,800
	0-21	115	240	460	650	1,130	1,850	2,600	3,700	6,400	18,470
	45	95	200	370	520	940	1,500	2,110	3,000	5,125	14,775
	35	125	250	475	670	1,195	1,900	2,760	3,810	6,590	19,000
	0-27	130	270	510	720	1,290	2,065	2,885	4,125	7,105	20,500
	60	95	200	370	525	935	1,500	2,100	2,985	5,185	14,960
	50	140	290	545	775	1,380	2,210	3,155	4,475	7,655	22,000
	0-35	155	330	620	875	1,565	2,500	3,495	4,950	8,640	24,950
	70	100	210	395	540	960	1,590	2,160	3,070	5,415	15,330
	50	165	350	655	915	1,660	2,650	3,735	5,295	9,045	26,000
	0-43	170	360	680	960	1,710	2,735	3,850	5,460	9,475	27,300
	80	120	255	490	690	1,230	1,960	2,735	3,880	6,780	19,570
	60	190	400	755	1,080	1,900	3,050	4,315	6,140	10,600	30,650
	0-48	200	420	800	1,120	2,000	3,200	4,480	6,350	11,000	31,900
	100	145	300	585	825	1,470	2,350	3,365	4,765	8,140	23,450
	80	230	480	905	1,275	2,280	3,645	5,115	7,250	12,500	36,150
	0-62	245	510	965	1,365	2,435	3,900	5,535	7,850	13,420	38,760
	125	160	335	645	910	1,625	2,590	3,640	5,270	9,000	25,850
	100	265	555	1,050	1,490	2,645	4,230	5,930	8,415	14,650	42,300
	0-76	285	580	1,140	1,600	2,870	4,590	6,420	9,140	15,800	45,600
	150	165	350	655	915	1,660	2,650	3,775	5,295	9,045	26,000
	125	290	600	1,160	1,630	2,915	4,665	6,550	9,285	15,900	46,350
	0-87	330	680	1,310	1,840	3,300	5,270	7,410	10,500	18,000	52,270
	150	285	580	1,125	1,600	2,850	4,480	6,290	9,060	15,450	44,690
	125	360	740	1,420	2,000	3,570	5,725	8,015	11,350	19,700	57,000
	0-103	375	780	1,485	2,100	3,740	5,990	8,390	11,875	20,670	59,600
	175	290	605	1,170	1,625	2,945	4,700	6,600	9,400	16,200	46,850
	150	390	810	1,540	2,180	3,885	6,200	8,715	12,350	21,300	61,500
	0-117	420	875	1,655	2,340	4,175	6,680	9,375	13,300	23,000	66,450
	200	310	640	1,250	1,730	3,100	4,920	6,920	9,840	17,000	49,150
	150	450	935	1,775	2,500	4,465	7,155	10,000	14,200	24,700	71,250
	0-131	460	970	1,830	2,590	4,615	7,395	10,300	14,725	25,450	73,500
	225	290	610	1,160	1,640	2,930	4,670	6,560	9,335	16,150	
	200	415	855	1,640	2,320	4,140	6,600	9,275	13,200	22,830	
	0-145	505	1,040	2,000	2,830	5,050	8,050	11,310	16,100	27,840	
	250	310	635	1,220	1,720	3,070	4,890	6,870	9,780	16,900	
	225	415	860	1,650	2,330	4,160	6,640	9,330	13,270	22,900	
	0-160	550	1,130	2,170	3,070	5,475	8,730	12,270	17,460	30,200	

*Cast steel construction required for service above 250 psig.

Capacities are based on an accuracy of regulation of 1. P.S.I. and with pipe sizes to insure reasonable steam velocities. Refer to pipe sizing Chart Page 19.

Bold face numbers in outlet steam pressure column indicate pressures at which maximum capacity occurs. Lower outlet pressures do not increase valve capacity.

ELECTRICALLY OPERATED ON-OFF VALVE TYPE 25E

With a 25E an electric signal provides on or off flow control and can be used to start up a steam main automatically, or to supply steam to any area or piece of equipment only when it is required.

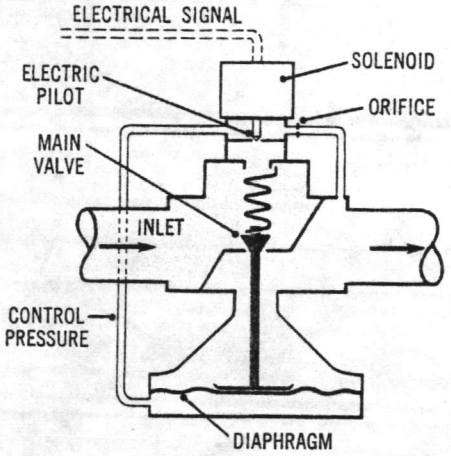

HOW THE 25E, 25PE AND 25TE WORK

On the 25E, when the solenoid pilot is energized electrically the pilot valve opens, and control pressure applied to the bottom of the main valve diaphragm opens the main valve fully. When the electric pilot is de-energized the pilot valve closes, and control pressure is relieved through the bleed orifice. Then, the main valve return spring and inlet steam pressure acting on the valve head close the main valve tight.

Combined with other pilots in series, the electric solenoid pilot always overrides them and shuts the main valve when it closes. When the electric pilot opens, control shifts to the other pilot or pilots. With its electric pilot energized, a 25TE works the same as a 25T. A 25PE works the same as a 25P. And a 25PTE works the same as a 25PT.

HOW TO INSTALL AND SIZE THE 25E

Valve installation with bypass piping, strainer and trap should resemble that of the 25T (see page 9). Sometimes, the bypass is not considered necessary (see diagram at right).

Maximum working pressure of the 25E pilot is 250 psig/17.2 bar. Steam temperature may not exceed 408°F/208°C.

Electrical installation

The electrical actuating signal may originate in almost any kind of control circuitry. Standard solenoid coils are designed to operate on 115-volt, 60 Hz AC. The pilot is normally closed. It opens when energized, and the main valve is thus opened while the electrical signal circuit is energized.

If the control circuit contains a temperature-sensing element, its location—like that of the 25T thermostatic bulb—must be in the region to be held at regulated temperature.

Solenoids

The standard solenoid has a NEMA 1, General Purpose enclosure. NEMA 4 Watertight and NEMA 7 Explosion-proof enclosures are also available at extra cost. The standard 115-volt, 60 Hz AC coil can be replaced with an optional 230-volt coil at no extra cost.

Valve sizing

Use the capacity chart on page 8 and the notes on page 6 for sizing the 25E in terms of steam capacity.

How to order

Please include the following information when ordering a Sarco 25E on-off valve:

- valve size by nominal pipe/flange size
- body construction of cast iron or cast steel
- type of control—25E for electric actuation
- voltage and style of enclosure for electric solenoid
- steam supply pressure
- intended application

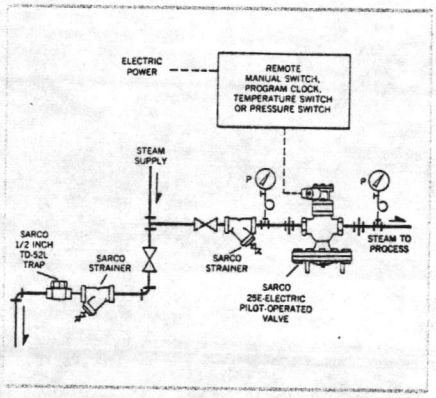

25E DIMENSIONS AND WEIGHTS

SIZE	A		A[1]		DIMENSIONS B		C		D		E		Approx. Weight Cast Iron		Cast Steel	
Screwed	in.	mm	in.	mm	in.	mm	in.	mm	in.	mm	in.	mm	Lb.	Kg.	Lb.	Kg.
½"	5½	140			7⅝	194	6⅛	154	6⅜	157	12¼	311	28	12.7	31	14.1
¾"	5½	140			7⅝	194	6⅛	154	6⅜	157	12¼	311	28	12.7	31	14.1
1"	6	152			8⅝	219	6	152	6¾	171	12¾	324	35	15.9	38	17.2
1¼"	7¼	184			8⅝	219	6⅝	167	7⅛	179	13⅝	346	40½	18.4	44	20.0
1½"	7¼	184			8⅝	219	6⅝	167	7⅛	179	13⅝	346	40½	18.4	44	20.0
2"	8½	216			10⅝	270	7⅜	183	8⅜	208	15⅜	391	65	29.5	71	32.2
Flanged	125 lb.		250 & 300 lb.													
2½"	10⅞	276	11½	292	13⅝	346	7⅞	200	13 15⁄16	354	21 13⁄16	554	153½	69.6	167	75.8
3"	11¾	298	12½	318	13⅝	346	7 13⁄16	198	14⅞	367	22¼	565	184½	83.7	201	91.2
4"	13⅞	352	14½	368	15⅝	397	9⅛	232	16⅛	410	25¼	641	280½	127	305	138
6"	18⅛	460	19	483	19¾	502	8¾	222	16 1⁄16	424	25⅞	646	560	254		

In the 2½" to 6" sizes, Dimension A is for 125 lb. flanged, and Dimension A[1] is for 250 lb. cast iron and 300 lb. cast steel flanged (except 6" size cast iron only). Weights are for 250 lb. or 300 lb. flanged bodies.

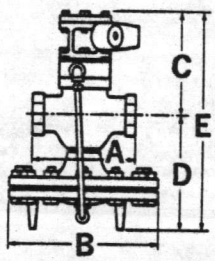

½" to 2" sizes have screwed connections

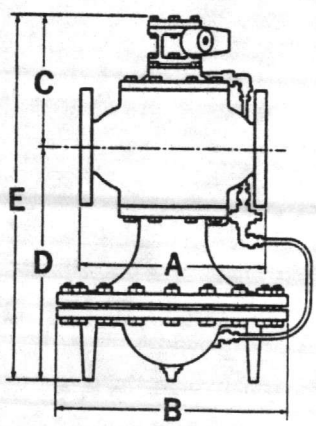

2½" to 6" size have flanged connections

Adding an electric pilot to a pressure or temperature regulator permits you to supply steam to any area or process only when it is required, thus preventing unnecessary heat loss or steam usage.

Determine steam capacities for the 25TE according to data on the 25T, pages 6 and 8.

Select a thermostat according to 25T data on page 7.

See page 14, opposite for solenoid coil choices.

Check with your Sarco Representative on any unusual features of the installation.

How to order

When ordering a Sarco 25TE Temperture Regulator with auxiliary electric pilot, please include all of the following information:

valve size by nominal pipe/flange size

body construction of cast iron or cast steel

type of control—25TE

style of thermostatic bulb

length of capillary tubing

temperature adjustment range

voltage and style of enclosure for electric solenoid

steam supply pressure. Specify low pressure pilot when the inlet pressure for flanged sizes is 15 psig or below.

intended application

DIMENSIONS

SIZE	A		A[1]		B		C		D		E		Approx. Weight Cast Iron		Cast Steel	
Screwed	in.	mm	in.	mm	in.	mm	in.	mm	in.	mm	in.	mm	Lb.	Kg.	Lb.	Kg.
½"	5½	140			7⅝	194	12 1/16	306	6 3/16	157	18¼	464	30½	13.8	33	15.0
¾"	5½	140			7⅝	194	12 1/16	306	6 3/16	157	18¼	464	30½	13.8	33	15.0
1"	6	152			8⅝	219	12	305	6¾	171	18¾	476	37½	17.0	41	18.6
1¼"	7¼	184			8⅝	219	12 5/16	319	7 1/16	179	19⅝	498	43	19.5	47	21.3
1½"	7¼	184			8⅝	219	12 5/16	319	7 1/16	179	19⅝	498	43	19.5	47	21.3
2"	8½	216			10⅝	270	13 3/16	335	8 3/16	208	21⅜	543	67½	30.6	74	33.6
Flanged	125 Lb.		250 & 300 Lb.													
2½"	10⅞	276	11½	292	13⅜	346	13 15/16	354	13 15/16	354	27⅞	708	156	70.8	170	77.1
3"	11¾	298	12½	318	13⅜	346	13 15/16	354	14 7/16	367	28⅜	721	187	84.8	204	92.5
4"	13⅞	352	14½	368	15⅝	397	15 1/16	383	16⅛	410	31 3/16	792	283	128	308	140
6"	18⅛	460	19	483	19¾	502	11 13/16	300	16 11/16	424	28½	724	560	254		

In the 2½" to 6" sizes, Dimension A is for 125 Lb. flanged, and Dimension A[1] is for 250 Lb. Cast Iron and 300 Lb. Cast Steel flanged (except 6" size Cast Iron only). Weights are for 250 Lb. or 300 Lb. flanged bodies. All weights include T-2 Thermostat.

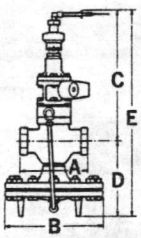

½" to 2" sizes have screwed connections

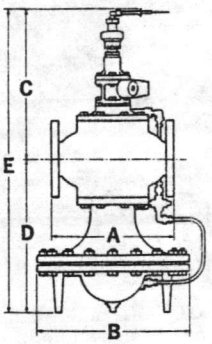

2½" to 6" sizes have flanged connections

Determine steam capacities for the pressure reducing mode of operation from data on pages 12 and 13.

Select a pressure pilot spring according to data on page 10.

See page 14, opposite for solenoid coil choices.

Check with your Sarco Representative on unusual installations.

How to order

When ordering a Sarco 25PE Pressure Reducing Valve with auxiliary electric pilot, please include all of the following information:

valve size by nominal pipe/flange size

body construction of cast iron or cast steel

type of control—25PE

steam supply pressure

reduced pressure range and pilot valve spring selected

voltage and style of enclosure for electric solenoid

intended application

DIMENSIONS

SIZE	A		A[1]		B		C		D		E		Approx. Weight Cast Iron		Cast Steel	
Screwed	in.	mm	in.	mm	in.	mm	in.	mm	in.	mm	in.	mm	Lb.	Kg.	Lb.	Kg.
½"	5½	140			7⅝	194	14 7/16	367	6 3/16	157	20⅝	524	36	16.3	39	17.7
¾"	5½	140			7⅝	194	14 7/16	367	6 3/16	157	20⅝	524	36	16.3	39	17.7
1"	6	152			8⅝	219	14⅜	365	6¾	171	21⅛	537	43	19.5	47	21.3
1¼"	7¼	184			8⅝	219	14 15/16	379	7 1/16	179	22	559	48	21.8	52	23.6
1½"	7¼	184			8⅝	219	14 15/16	379	7 1/16	179	22	559	48	21.8	52	23.6
2"	8½	216			10⅝	270	15 5/16	395	8 3/16	208	23¾	603	73	33.1	80	36.3
Flanged	125 Lb		250 & 300 Lb.													
2½"	10⅞	276	11½	292	13⅜	346	16¼	413	13 15/16	354	30 3/16	767	160	72.6	175	79.4
3"	11¾	298	12½	318	13⅜	346	16 3/16	411	14 7/16	367	30⅝	778	191	86.6	208	94.4
4"	13⅞	352	14½	368	15⅝	397	17½	445	16⅛	410	33⅝	854	287	130	313	142
6"	18⅛	460	19	483	19¾	502	14⅛	359	16 11/16	424	30 13/16	783	560	254		

In the 2½" to 6" sizes, Dimension A is for 125 Lb. flanged, and Dimension A[1] is for 250 Lb. Cast Iron and 300 Lb. Cast Steel flanged (except 6" Cast Iron only). Weights are for 250 Lb. or 300 Lb. flanged bodies.

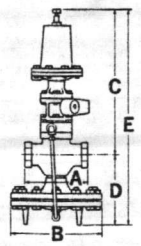

½" to 2" sizes have screwed connections

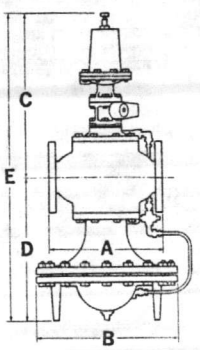

2½" to 6" sizes have flanged connections

The 25PT combination pressure-temperature regulator reduces a high pressure steam supply to a safe and economical level, uses it to provide automatic temperature control of steam heated equipment, and does so with a single main valve.

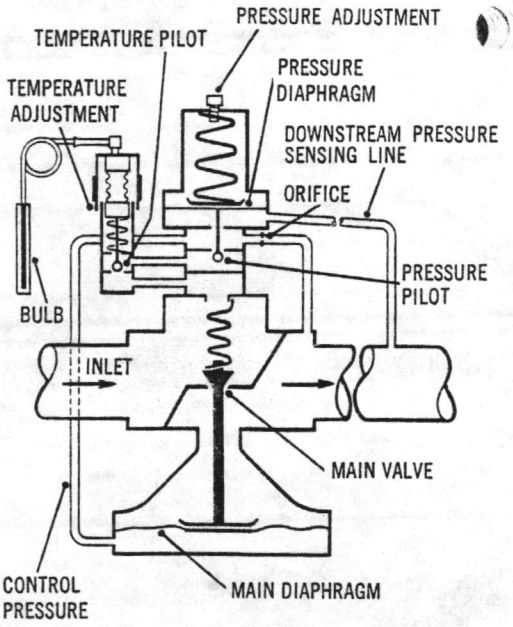

Normal positions before startup are with the main valve closed, pressure pilot open, and temperature pilot open. On startup, entering steam passes through both pilot valves into the diaphragm chamber and out through the control orifice. As flow through the pilot valves exceeds flow through the orifice, control pressure increases in the main diaphragm chamber, and that opens the main valve.

As steam flows through the main valve, the increase in downstream pressure feeds back through the pressure sensing line to the underside of the pressure diaphragm. When force below that diaphragm balances the compression force of the spring above it, the pilot valve throttles. Control pressure in the main diaphragm chamber positions the main valve so that maximum steam pressure will not be exceeded.

As the medium being heated approaches the desired temperature, liquid in the bulb expands through the capillary tubing into the bellows and throttles the temperature pilot valve. At its control point, the temperature pilot valve delivers just enough steam to maintain a control pressure that results in the required rate of steam flow through the main valve.

When no steam is required, the main valve closes tight to provide dead-end shut off. The temperature setting can be changed by turning the calibrated adjustment dial. The maximum delivery pressure can be changed by adjusting the pressure pilot spring.

In its temperature regulating mode of operation, the 25PT performs exactly the same as if it were a 25T. Size it according to data on pages 6 and 8.

How to order

When ordering a Sarco 25PT pressure-temperature regulator, please include all of the following information:

valve size by nominal pipe/flange size

body construction of cast iron or cast steel

type of control—25PT for temperature regulation with pressure limiting

steam supply pressure

reduced pressure range and pilot valve spring selected

style of thermostatic bulb

length of capillary tubing

temperature adjustment range

intended application

For example: Sarco 3/4" Cast Iron 25PT Pressure-Temperature Regulator for 100 psig inlet pressure, yellow spring for 3 to 30 psi pressure range, T9 thermostat with 15 feet of brass-armored tubing, temperature range 60°-120°F, for air-tempering coil bank to operate at 25 psi pressure.

In this 25PT installation, steam is supplied at the optimum pressure and temperature for heat exchanger operation. Steam flow is regulated to keep water in the loop at the set temperature.

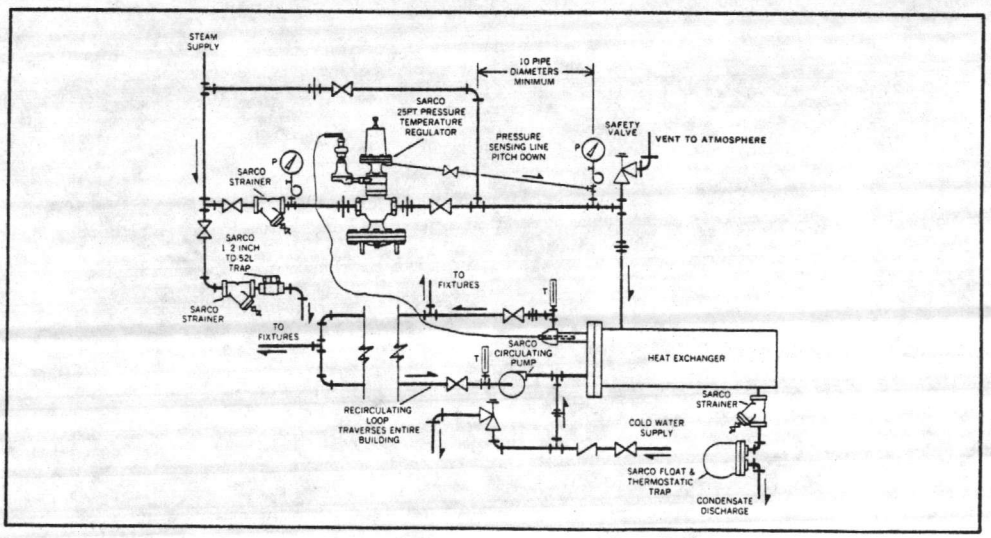

SIZE	A		A¹		B		C		D		E		Approx. Weight Cast Iron		Approx. Weight Cast Steel	
Screwed	in.	mm	in.	mm	in.	mm	in.	mm	in.	mm	in.	mm	Lb.	Kg.	Lb.	Kg.
½″	5½	140			7⅝	194	13¼	337	6³⁄₁₆	157	19⁷⁄₁₆	494	38	17.2	41	18.6
¾″	5½	140			7⅝	194	13¼	337	6³⁄₁₆	157	19⁷⁄₁₆	494	38	17.2	41	18.6
1″	6	152			8⅝	219	13⁵⁄₁₆	335	6¾	171	19¹⁵⁄₁₆	506	45	20.4	49	22.2
1¼″	7¼	184			8⅝	219	13¾	349	7¹⁄₁₆	179	20¹³⁄₁₆	529	50½	22.9	55	25.0
1½″	7¼	184			8⅝	219	13¾	349	7¹⁄₁₆	179	20¹³⁄₁₆	529	50½	22.9	55	25.0
2″	8½	216			10⅝	270	14⅜	365	8³⁄₁₆	208	22⁹⁄₁₆	573	75	34.0	82	37.2
Flanged	125 Lb.		250 & 300 Lb.													
2½″	10⅞	276	11½	292	13⅝	346	15¹⁄₁₆	383	13¹⁵⁄₁₆	354	29	737	163½	74.2	178	80.7
3″	11¾	298	12½	318	13⅝	346	15	381	14⁷⁄₁₆	367	29⁷⁄₁₆	748	194½	88.2	212	96.2
4″	13⅞	352	14½	368	15⅝	397	16⁵⁄₁₆	414	16⅛	410	32⁷⁄₁₆	824	290½	132	316	143
6″	18⅛	460	19	483	19¾	502	13	330	16¹¹⁄₁₆	424	29¹¹⁄₁₆	754	560	254		

In the 2½″ to 6″ sizes, Dimension A is for 125 Lb. flanged, and Dimension A¹ is for 250 Lb. Cast Iron and 300 Lb. Cast Steel flanged (except 6″ size Cast Iron only). Weights are for 250 Lb. or 300 Lb. flanged bodies. All weights include T-2 Thermostat.

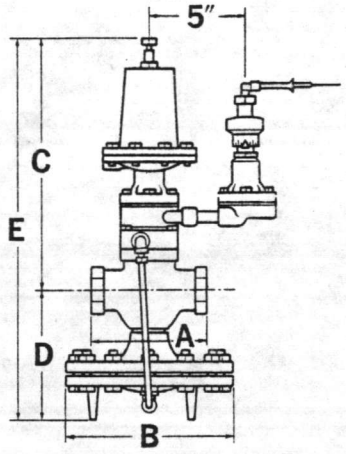

½″ to 2″ sizes have screwed connections

Piping layout should be planned so that the regulator valve will be on a horizontal run with bypass piping provided so that the system can be operated under manual control while the regulator is isolated for servicing.

Pipe sizes should be determined on the basis of steam flow requirements. The regulator valve, sized from the table on page 6, is likely to be smaller than inlet piping and will almost always be smaller than outlet piping.

A steam trap must be installed ahead of the valve to prevent condensate from reaching the regulator. A Sarco 1/2″ TD-52L Thermo-Dynamic trap is recommended. The trap and regulator should both be protected with a strainer.

The thermostatic bulb should be carefully located in the medium being heated. Make sure that the entire length of the thermostatic bulb is immersed in the heated medium. Locate the thermometer being used to monitor or record regulated temperature close to the thermostatic bulb. When the bulb is contained in a well, use a heat conducting compound to improve response time.

Forced recirculation is required for good control of an instantaneous water heater or a heat exchanger that has its thermostatic bulb located in the discharge line.

The pressure pilot line that senses downstream pressure should be connected to a straight section of pipe a minimum of 10 pipe diameters downstream from the nearest elbow, tee, valve or other restriction. It should enter the top of the pipe and should be pitched to drain away from the pressure pilot. If the regulator serves only one piece of equipment, its pilot line—properly pitched for drainage—can be connected to the steam space of that equipment. Wherever the pilot line is connected, a pressure gage should be connected close beside it to measure the same pressure.

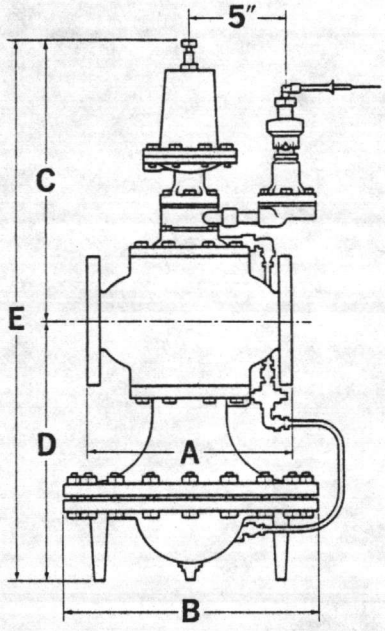

2½″ to 6″ sizes have flanged connections

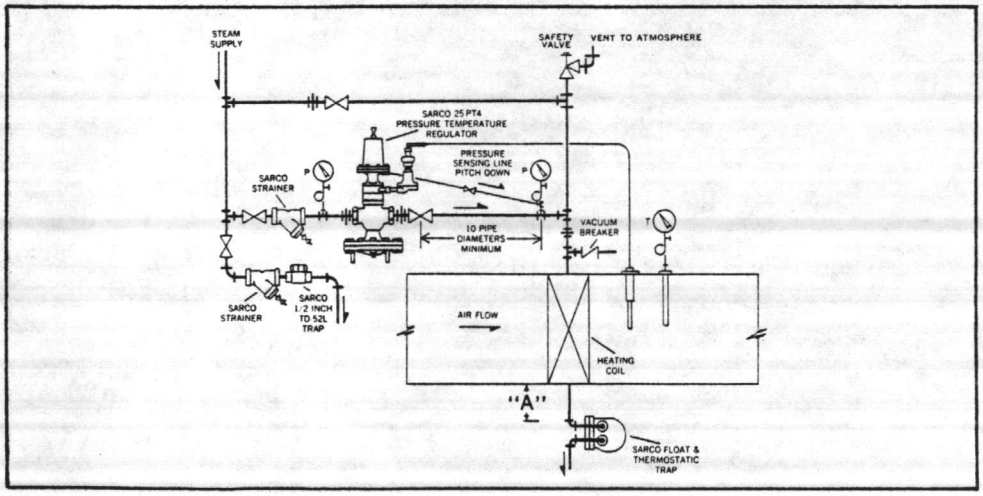

This is a typical 25 PT-4 regulator installed on an Air heating coil. Where coil may be exposed to freezing temperatures consult your local Sarco Representative for dimension "A" and other special requirements to prevent freezing of coils.

Adding an electric pilot to a pressure-temperature regulator permits you to supply steam to the equipment only when it is required, thus preventing unnecessary heat loss or steam usage.

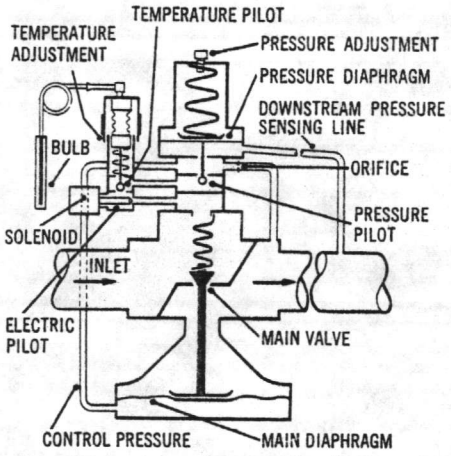

As in all other 25-Series regulators, main valve opening is governed by control pressure. If any one of the three pilots—pressure, temperature or electric—should close tight, the main valve will close tight.

When the electric pilot is energized and open, the temperature pilot normally throttles control pressure. If downstream pressure should rise to its set point, then the pressure pilot closes sufficiently to take over regulation of control pressure.

Thus, the 25PTE functions as a 25T, a 25P or a 25E in turn—depending on which of the three signals calls for a decrease or shutoff of steam flow.

Determine steam capacities for the 25PTE according to data on the 25T, pages 6 and 8.

See page 7 for choice of thermostat.

See page 10 for choice of pressure pilot spring.

See page 14 for choice of solenoid coil.

A 25PTE installation should follow the general rules outlined in this bulletin for all the 25-Series regulators.

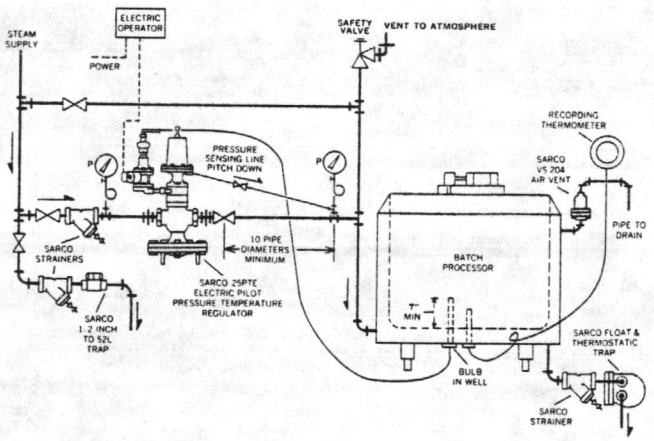

A 25 PTE-8 applied to a batch processor providing pressure and temperature control, with auxiliary electric pilot for remote or programmed on-off operation.

How to order

When ordering a Sarco 25PTE Pressure-Temperature Regulator with Auxiliary Electric Pilot, please include all of the following information:

- valve size by nominal pipe/flange size
- body construction of cast iron or cast steel
- type of control—25PTE
- steam supply pressure
- reduced pressure range and pilot valve spring selected
- style of thermostatic bulb
- length of capillary tubing
- temperature adjustment range
- voltage and style of enclosure for electric solenoid
- intended application

DIMENSIONS

SIZE	A		A[1]		B		C		D		E		Approx. Weight Cast Iron		Cast Steel	
Screwed	in.	mm	in.	mm	in.	mm	in.	mm	in.	mm	in.	mm	Lb.	Kg.	Lb.	Kg.
½"	5½	140			7⅝	194	13¼	337	6³⁄₁₆	157	19⁷⁄₁₆	494	41	18.6	45	20.4
¾"	5½	140			7⅝	194	13¼	337	6³⁄₁₆	157	19⁷⁄₁₆	494	41	18.6	45	20.4
1"	6	152			8⅝	219	13⁵⁄₁₆	335	6¾	171	19¹⁵⁄₁₆	506	48	21.8	52	23.6
1¼"	7¼	184			8⅝	219	13¾	349	7¹⁄₁₆	179	20¹³⁄₁₆	529	53½	24.3	58	26.3
1½"	7¼	184			8⅝	219	13¾	349	7¹⁄₁₆	179	20¹³⁄₁₆	529	53½	24.3	58	26.3
2"	8½	216			10⅜	270	14⅜	365	8³⁄₁₆	208	22⁷⁄₁₆	573	78	35.4	85	38.6
Flanged	125 Lb.		250 & 300 Lb.													
2½"	10⅞	276	11½	292	13⅝	346	15⅛	383	13¹⁵⁄₁₆	354	29	737	166½	75.6	181	82.1
3"	11¾	298	12½	318	13⅝	346	15	381	14⁷⁄₁₆	367	29⁷⁄₁₆	748	197½	89.6	215	97.5
4"	13⅞	352	14½	368	15⅝	397	16⁵⁄₁₆	414	16⅛	410	32⁷⁄₁₆	824	293½	133	320	145
6"	18⅛	460	19	483	19¾	502	13	330	16¹¹⁄₁₆	424	29¹¹⁄₁₆	754	560	254		

In the 2½" to 6" sizes, Dimension A is for 125 Lb. flanged, ana Dimension A[1] is for 250 Lb. Cast Iron and 300 Lb. Cast Steel flanged (except 6" size Cast Iron only). Weights are for 250 Lb. or 300 Lb. flanged bodies. All weights include T-2 Thermostat.

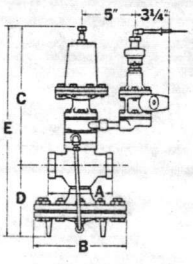

½" to 2" sizes have screwed connections

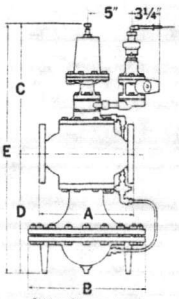

2½" to 6" sizes have flanged connections

In operation, a pressure reducing valve produces a lower pressure at its outlet than at its inlet. The pressure difference creates a high steam velocity across the valve seat. In most reducing valve installations, sonic velocity will occur. The extreme velocities that must exist across reducing valve seats cannot be tolerated in pipes supplying the valves and leading from them. Erosion and noise would be prohibitive.

In such applications as heating systems—where noise of steam flow would be a consideration—it is common practice to limit velocities to between 4,000 and 6,000 feet per minute. Considerably higher steam velocities are acceptable outdoors and in plants where the environment is already noisy.

The chart here lists steam capacities of pipes under various pressure and velocity conditions.

Example

Given a steam heating system with a 100 psig inlet pressure ahead of the pressure reducing valve and a capacity of 1,000 pounds of steam per hour at 25 psig, find the size 25P pressure reducing valve required. Find, also, the smallest sizes of upstream and downstream piping for reasonably quiet steam velocities.

Valve sizing

On the capacity chart on page 12, locate 100 psig inlet pressure in the left column. In the next column, find reduced pressure 5-48 psig, which brackets 25 psig. Along the same horizontal line, find 1,120 pounds per hour under 3/4-inch valve size. The correct 25P pressure reducing valve size is thus 3/4-inch. The pilot spring from the table on page 10 should be in the 3-30 psig range—code, yellow.

Upstream piping

Enter the velocity chart on this page at A for 1,000 pounds per hour. Go over to point B where the 100 psig diagonal line intersects. Follow up vertically

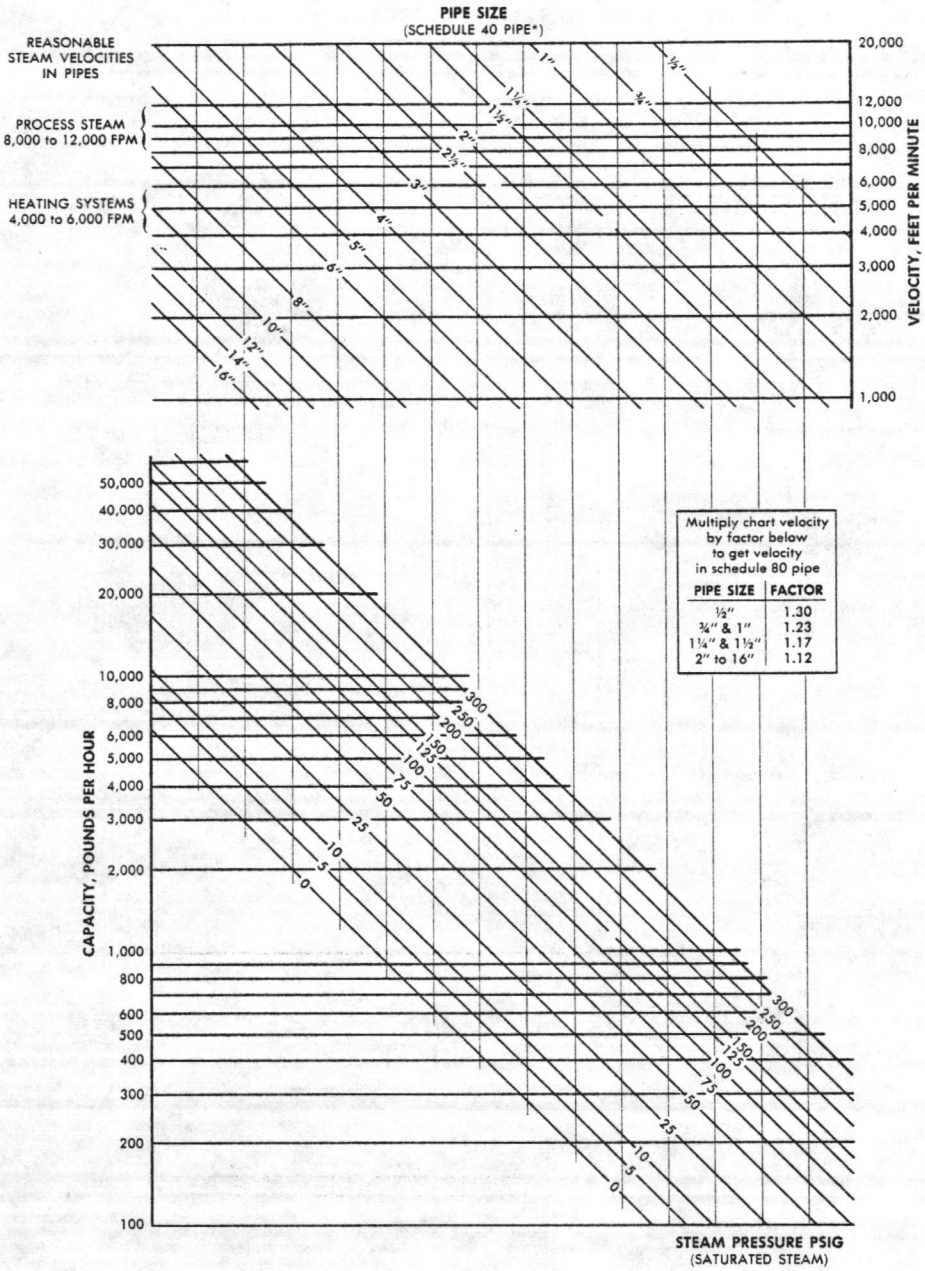

to C where an intersection with a diagonal line falls inside the 4,000-to-6,000 foot-per-minute velocity band. Actual velocity at D is about 4,800 feet per minute for 1-1/2-inch upstream piping.

Downstream piping

Enter the velocity chart at A for 1,000 pounds per hour. Go over to point E where the 25 psig diagonal line intersects. Follow up vertically to F where an intersection with a diagonal line falls inside the 4,000-to-6,000 foot-per-minute velocity band. Actual velocity at G is 5,500 feet per minute for 2-1/2-inch downstream piping.

Thus to insure quiet steam velocities on a heating system application the 3/4-inch standard valve should be installed with 1-1/2-inch upstream and 2-1/2-inch downstream piping.

Reduced port "S" valves have capacities matched to their nominal sizes for lower steam velocities and noise.

Shall be of the pilot-actuated, diaphragm-operated type with pilot assembly on top and diaphragm housing below. The main valve shall be single-seated with hardened stainless steel trim, and the valve body shall be cast iron or steel.

The main valve head and seat shall be conveniently replaceable by removing only the top body cover. The valve head shall be free to lift out without the use of tools.

The main valve stem guide shall be fitted with a flushing and pressure arresting device to promote cleanliness of guiding parts and to prevent pressure build-up in the upper diaphragm chamber.

The pilot shall be of bolt-on design and shall be connected to the valve body without the use of pipe nipples. Removal of the pilot shall require no disturbance to control connections.

Temperature setting of the thermostatic system shall be adjustable without the use of tools, and the temperature set point shall be readable in degrees on a calibrated dial. The thermostatic system must be replaceable without disturbing temperature control setting of the regulator. The hydraulic thermostatic system shall be capable of withstanding without damage a temperature at the bulb 200°F higher than the set point, to a maximum of 350°F.

Shall be of the pilot-actuated, diaphragm-operated type with pilot assembly on top and diaphragm housing below. The main valve shall be single-seated with hardened stainless steel trim, and the valve body shall be cast iron or steel.

The main valve head and seat shall be conveniently replaceable by removing only the top body cover. The valve head shall be free to lift out without the use of tools.

The main valve stem guide shall be fitted with a flushing and pressure arresting device to promote cleanliness of guiding parts and to prevent pressure build-up in the upper diaphragm chamber.

The pilot shall be of bolt-on design and shall be connected to the valve body without the use of pipe nipples. The pilot diaphragm shall be covered for protection against dirt accumulation.

Shall be of the pilot-actuated, diaphragm-operated type with dual pilot assembly on top and diaphragm housing below. The main valve shall be single-seated with hardened stainless steel trim, and the valve body shall be cast iron or steel.

The main valve head and seat shall be conveniently replaceable by removing only the top body cover. The valve head shall be free to lift out without the use of tools.

The main valve stem guide shall be fitted with a flushing and pressure arresting device to promote cleanliness of guiding parts and to prevent pressure build-up in the upper diaphragm chamber.

Pilots shall be of bolt-on design and shall be connected to the valve body without the use of pipe nipples. Removal of either pilot shall require no disturbance to integral control connection of the main valve. The pressure pilot diaphragm shall be covered for protection against dirt accumulation.

Temperature setting of the thermostatic pilot shall be adjustable without the use of tools, and the temperature set point shall be readable in degrees on a calibrated dial. The thermostatic system must be replaceable without disturbing temperature control setting of the regulator. The hydraulic thermostatic system shall be capable of withstanding without damage a temperature at the bulb 200°F higher than the set point, to a maximum of 350°F.

Shall be of the pilot-actuated, diaphragm-operated type with pilot assembly on top and diaphragm housing below. The main valve shall be single-seated with hardened stainless steel trim, and the valve body shall be cast iron or steel.

The main valve head and seat shall be conveniently replaceable by removing only the top body cover. The valve head shall be free to lift out without the use of tools.

The main valve stem guide shall be fitted with a flushing and pressure arresting device to promote cleanliness of guiding parts and to prevent pressure build-up in the upper diaphragm chamber.

The pilot shall be of bolt-on design and shall be connected to the valve body without the use of pipe nipples. Removal of the pilot shall require no disturbance to control connections.

High-temperature insulation suitable for continuous duty shall be used in manufacture of the pilot solenoid. The solenoid case shall meet requirements for NEMA (specify class) enclosures.

Shall be of the pilot-actuated diaphragm-operated type with dual pilot assembly on top and diaphragm housing below. The main valve shall be single-seated with hardened stainless steel trim, and the valve body shall be cast iron or steel.

The main valve head and seat shall be conveniently replaceable by removing only the top body cover. The valve head shall be free to lift out without the use of tools.

The main valve stem guide shall be fitted with a flushing and pressure arresting device to promote cleanliness of guiding parts and to prevent pressure build-up in the upper diaphragm chamber.

Pilots shall be of bolt-on design and shall be connected to the valve body without the use of pipe nipples. Removal of either pilot shall require no disturbance to control connections.

Temperature setting of the thermostatic pilot shall be adjustable without the use of tools, and the temperature set point shall be readable in degrees on a calibrated dial. The thermostatic system must be replaceable without disturbing temperature control setting of the regulator. The hydraulic thermostatic system shall be capable of withstanding without damage a temperature at the bulb 200°F higher than the set point, to a maximum of 350°F.

High temperature insulation suitable for continuous duty shall be used in manufacture of the electric pilot solenoid. The case that houses the solenoid shall meet requirements for NEMA (specify class) enclosures.

Shall be of the pilot-actuated, diaphragm-operated type with dual pilot assembly on top and diaphragm housing below. The main valve shall be single-seated with hardened stainless steel trim, and the valve body shall be cast iron or steel.

The main valve head and seat shall be conveniently replaceable by removing only the top body cover. The valve head shall be free to lift out without the use of tools.

The main valve stem guide shall be fitted with a flushing and pressure arresting device to promote cleanliness of guiding parts and to prevent pressure build-up in the upper diaphragm chamber.

Pilots shall be of bolt-on design and shall be connected to the valve body without the use of pipe nipples. Removal of either pilot shall require no disturbance to integral control connections. The pressure pilot diaphragm shall be covered for protection against dirt accumulation.

High-temperature insulation suitable for continuous duty shall be used in manufacture of the electric pilot solenoid. The case that houses the solenoid shall meet requirements for NEMA (specify class) enclosures.

Shall be of the pilot-actuated, diaphragm-operated type with three pilot assemblies on top and diaphragm housing below. The main valve shall be single-seated with hardened stainless steel trim, and the valve body shall be cast iron or steel.

The main valve head and seat shall be conveniently replaceable by removing only the top body cover. The valve head shall be free to lift out without the use of tools.

The main valve stem guide shall be fitted with a flushing and pressure arresting device to promote cleanliness of guiding parts and to prevent pressure build-up in the upper diaphragm chamber.

Pilots shall be of bolt-on design and shall be connected to the valve body without the use of pipe nipples. Removal of any pilot shall require no disturbance to integral control connections. The pressure pilot diaphragm shall be covered for protection against dirt accumulation.

Temperature setting of the thermostatic pilot shall be adjustable without the use of tools, and the temperature set point shall be readable in degrees on a calibrated dial. The thermostatic system must be replaceable without disturbing temperature control setting of the regulator. The hydraulic thermostatic system shall be capable of withstanding without damage a temperature at the bulb 200°F higher than the set point, to a maximum of 350°F.

High-temperature insulation suitable for continuous duty shall be used in manufacture of the electric pilot solenoid. The case that houses the solenoid shall meet requirements for NEMA (specify class) enclosures.

Noise levels of Sarco 25-Series regulators will **not** exceed 90 dBA when the valve and connecting piping are sized and installed as recommended in this bulletin and in the installation instructions.

Main Valves, Pressure Pilots, Temperature Pilots, "E" Pilot Cap	Cast Iron ASTM A126 Class B	Cast Steel ASTM A216 Grade WCB
Multiple Pilot Adapter Bracket	Cast Iron and Bronze	Cast Steel and Bronze
Electric Pilot Body	Cast Bronze ASTM B62	
Valve Heads and Seats	Hardened Stainless Steel	
Valve Spring, Stem and Guide	Stainless Steel	
Diaphragms—"P" Pilot and ½"—4" Valves	Phosphor Bronze, 2 Ply	
Diaphragm—6" Size Valve	Stainless Steel, single	
Temperature Pilot, Adjustment Knob	Phenolic Plastic	
Temperature Pilot, Seals	Teflon	
Capillary Tubing	Copper, Brass Armored, T10 and T11 are Stainless Steel	

spirax

SPIRAX SARCO, INC
1951 26TH ST S.W. • P.O. BOX 119, ALLENTOWN, PA 18105
PHONE (215) 797-5830 TELEX 84-7434

GPS 10M Printed in U.S.A.

SUBMITTAL DATA

ORDER NO. ~~22-1116R~~

DATE 4/2/84

JOB: UNACCOMPANIED ENLISTED PERSONNEL HOUSING
MARINE CORPS BASE
CAMP LEJEUNE, N. C.

ARCHITECT/ENGINEER: J. N. PEASE ASSOCIATES
CHARLOTTE, N. C.

CUSTOMER: RAMSEY AIR CONDITIONING, INC.
JACKSONVILLE, N. C.
PO #0518

MANUFACTURER: ENVIRONMENTAL TECHNOLOGIES, INC.

PRODUCT: TERMINAL AIR BLENDER UNITS
05-82-2244
15801-6, 3.1

480 Model ABT Size 1 Terminal Units complete with centrifugal fan, motor, air mixing dampers with pneumatic PSC actuator, 3 speed fan switch with disconnect and electrical junction box. Terminal to have bottom access for servicing. Maximum air leakage to be 2% at 3" W.G. See attached drawing and performance curve for additional information.

SOUND POWER DATA (TESTS CONDUCTED IN ACCORDANCE WITH ANS1S1.21)

		BANDS					
	C F M	2	3	4	5	6	7
DISCHARGE SOUND POWER LEVEL (RE: 10-12 WATTS)	260 @.05"SP	56	48	45	40	37	29
RADIATED SOUND POWER LEVEL (RE: 10-12 WATTS)	260 @.05"SP	64	47	44	40	41	31

APPROVAL REQUIRED
MATERIAL WILL NOT BE ORDERED UNTIL RECEIPT OF APPROVED DRAWINGS.
HOFFMAN & HOFFMAN, INC.

Par 2.2.1
T. Terminal Air Blenders.
Par. 3.1

HOFFMAN & HOFFMAN, INC.

Greensboro, N. C. / Asheville, N. C. / Charlotte, N. C. / Raleigh, N. C. / Roanoke, Va. / Charleston, S. C. / Columbia, S. C. / Greenville, S. C.

ENVIRO-TEC™ SUBMITTAL DATA

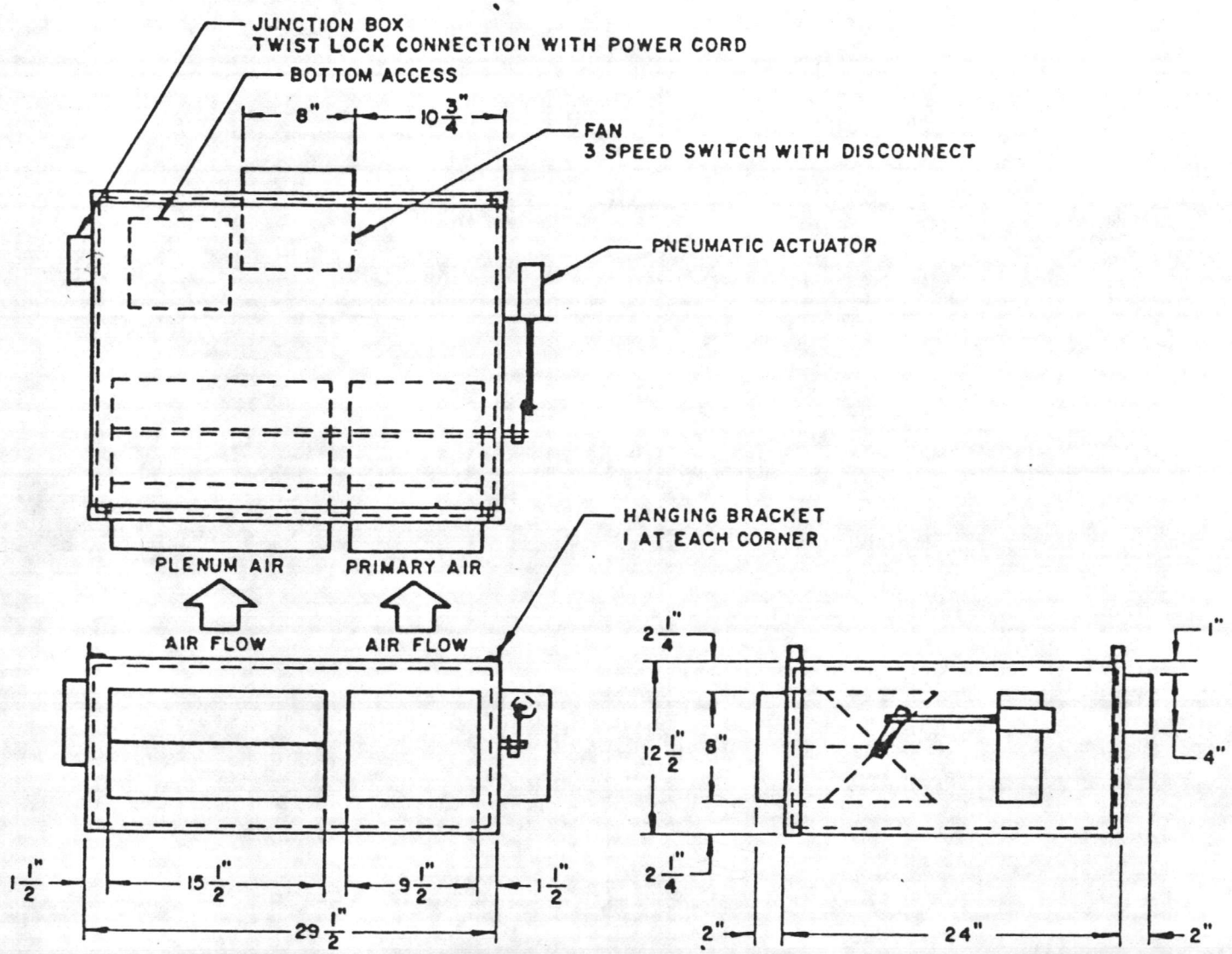

Terminal unit is constructed with 20 gauge galvanized steel. The damper is 16 gauge and the damper seat is 20 gauge. The entire casing is lined with 3/4" thick dual density fiberglass insulation. The surface density is 4.0 P.C.F. complying with NFPA 90-A and UL 181. All exposed edges are sealed.

NOTE: Capacities based upon certified test per AMCA 210.

NOTE: FANS TO BE WIRED FOR LOW SPEED OPERATION ONLY. 35 WATT MAX.

Par. 2.2.1
T. Terminal Air Blenders
Par. 3.1

ENVIRONMENTAL TECHNOLOGIES, A CORPORATION

MODEL ABT
SIZE ONE

Drawn by DM	Date. 21 MAR 84
Revision No	Revision Date
Approved by	Drawing No 10330

MODEL 465-530

WATTS 35,50,75

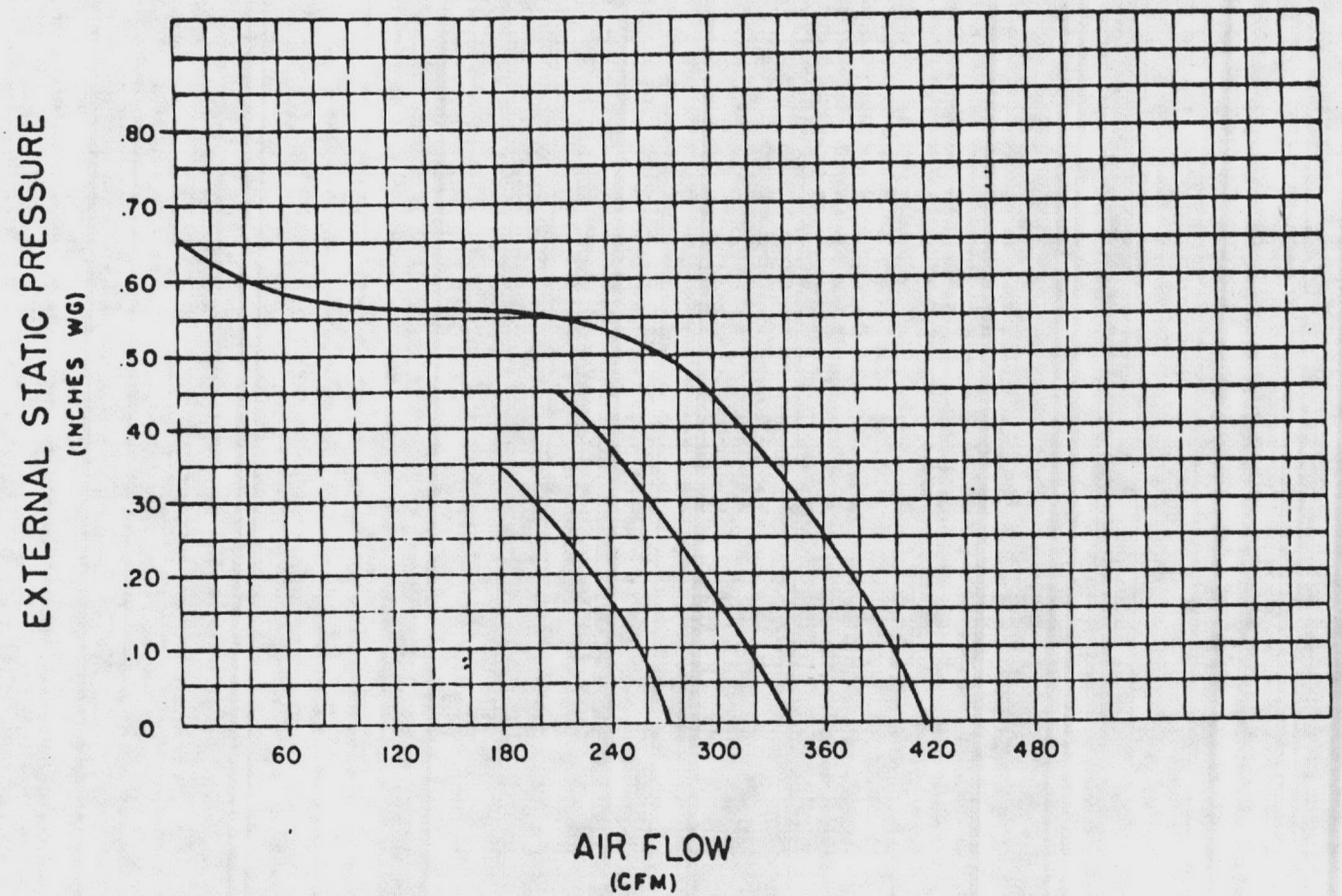

Par. 2.2.1
T. Terminal Air Blenders.
Par. 3.1

ENVIRONMENTAL TECHNOLOGIES, A CORPORATION

SIZE ONE
ABT FAN UNIT
PERFORMANCE CURVE

PROJECT
ARCH /ENGR
CONTRACTOR

DRAWN BY: N.M.
DATE 21 MAR 84

PLATE NO

SUBMITTAL DATA

ORDER NO. ~~22-1116R~~

DATE 4/2/84

JOB: UNACCOMPANIED ENLISTED PERSONNEL HOUSING
MARINE CORPS BASE
CAMP LEJEUNE, N. C.

ARCHITECT/ENGINEER: J. N. PEASE ASSOCIATES
CHARLOTTE, N. C.

CUSTOMER: RAMSEY AIR CONDITIONING, INC.
JACKSONVILLE, N. C.
PO #0518

MANUFACTURER: ENVIRONMENTAL TECHNOLOGIES, INC.

PRODUCT: TERMINAL AIR BLENDER UNITS
05-82-2244
15801-6, 3.1

480 Model ABT Size 1 Terminal Units complete with centrifugal fan, motor, air mixing dampers with pneumatic PSC actuator, 3 speed fan switch with disconnect and electrical junction box. Terminal to have bottom access for servicing. Maximum air leakage to be 2% at 3" W.G. See attached drawing and performance curve for additional information.

SOUND POWER DATA (TESTS CONDUCTED IN ACCORDANCE WITH ANS1S1.21)

		BANDS					
	C F M	2	3	4	5	6	7
DISCHARGE SOUND POWER LEVEL (RE: 10-12 WATTS)	260 @.05"SP	56	48	45	40	37	29
RADIATED SOUND POWER LEVEL (RE: 10-12 WATTS)	260 @.05"SP	64	47	44	40	41	31

APPROVAL REQUIRED

MATERIAL WILL NOT BE ORDERED UNTIL RECEIPT OF APPROVED DRAWINGS.
HOFFMAN & HOFFMAN, INC.

Par. 2.2.1
T Terminal Air Blenders
Par. 3.1

HOFFMAN & HOFFMAN, INC.

ENVIRO-TEC™ SUBMITTAL DATA

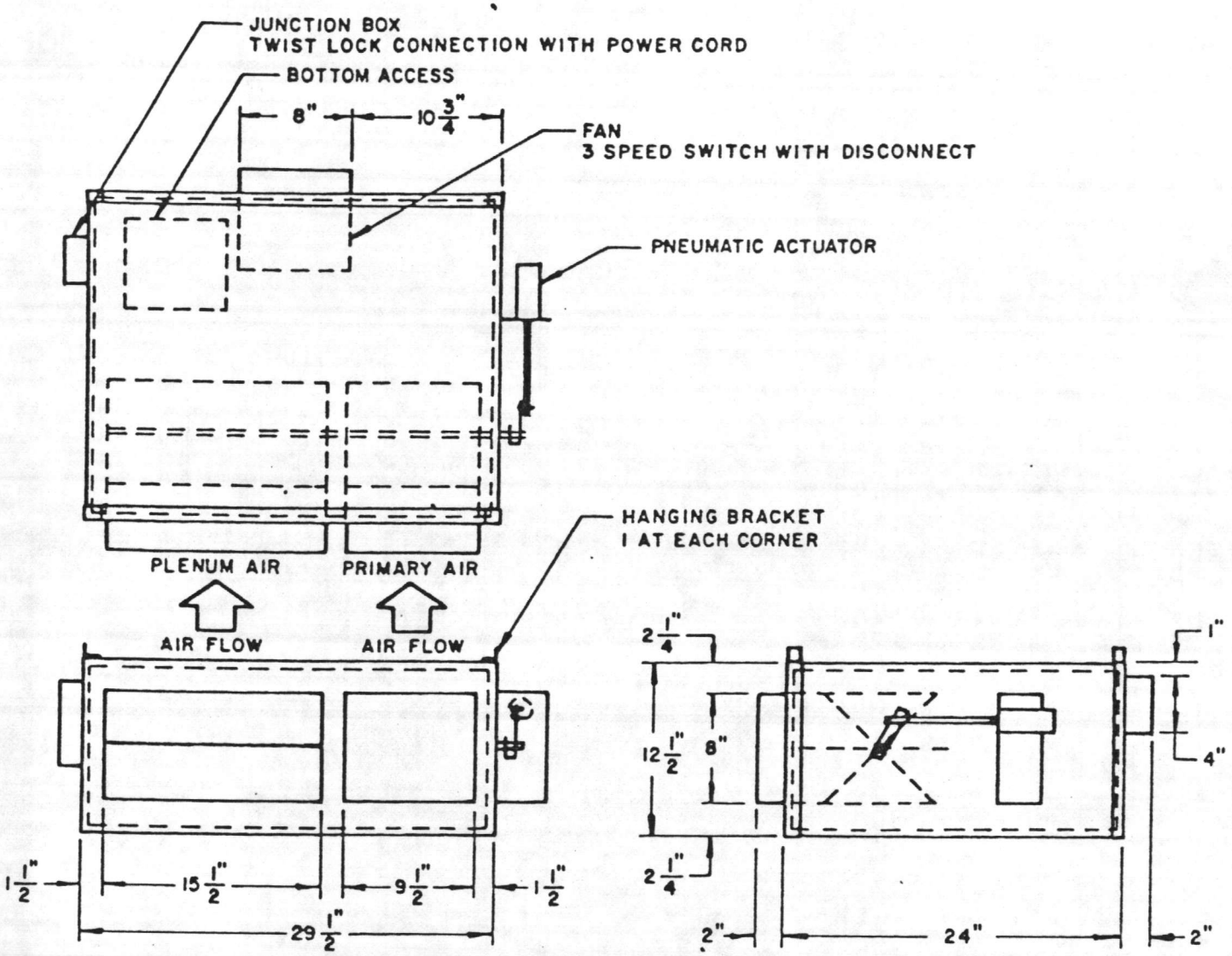

Terminal unit is constructed with 20 gauge galvanized steel. The damper is 16 gauge and the damper seat is 20 gauge. The entire casing is lined with 3/4" thick dual density fiberglass insulation. The surface density is 1.0 P.C.F. complying with NFPA 90-A and UL 181. All exposed edges are sealed.

1" S.L.

NOTE: Capacities based upon certified test per AMCA 210.

NOTE: FANS TO BE WIRED FOR LOW SPEED OPERATION ONLY. 35 WATT MAX.

Par. 2.2.1
T. Terminal Air Blenders.
Par. 3.1

ENVIRONMENTAL TECHNOLOGIES, A CORPORATION

MODEL ABT
SIZE ONE

Drawn by DM	Date 21 MAR 84
Revision No	Revision Date
Approved by	Drawing No 10332

MODEL 465-530

WATTS 35,50,75

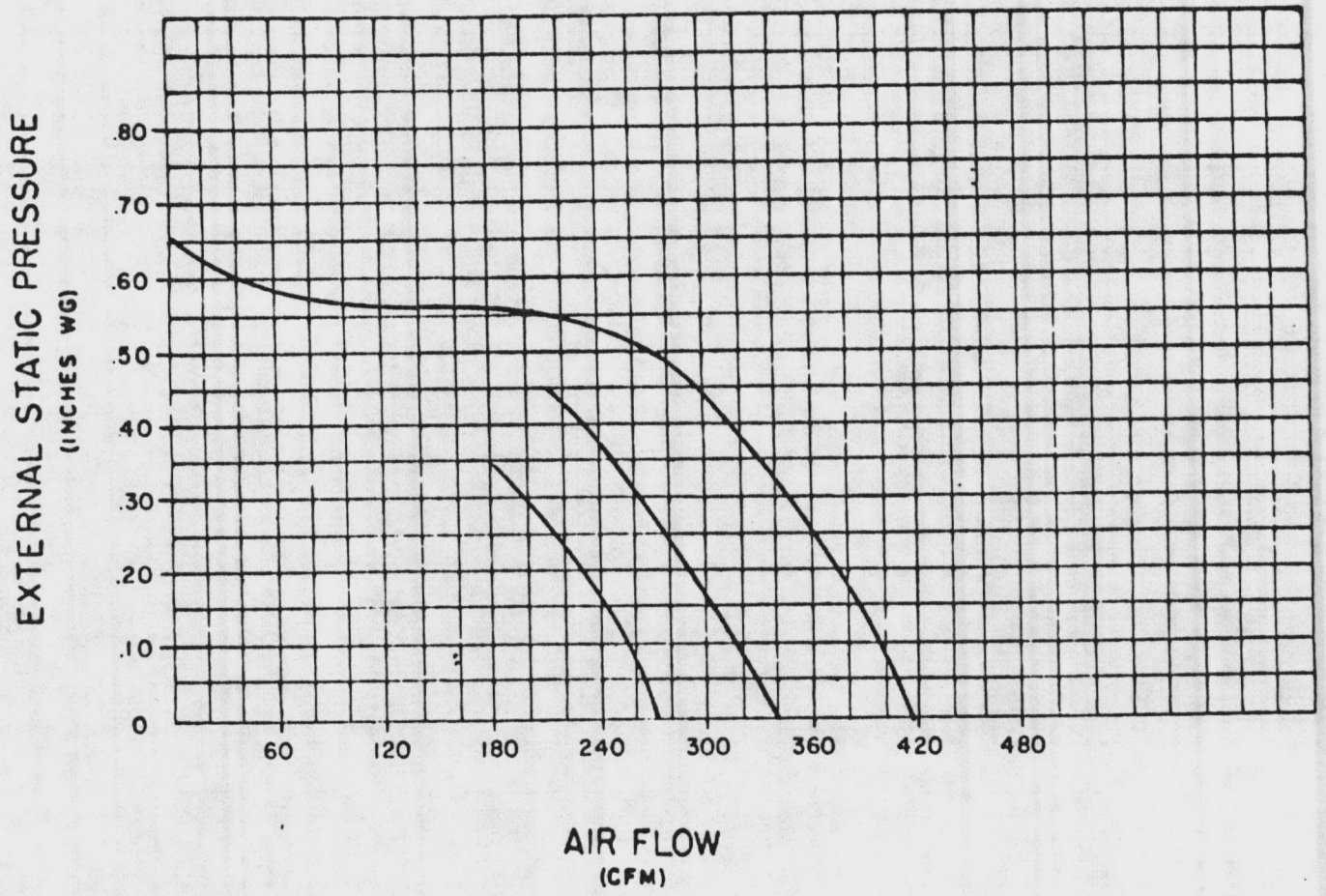

Par. 2.2.1
T. Terminal Air Blenders
Par. 3.1

ENVIRONMENTAL TECHNOLOGIES, A CORPORATION

SIZE ONE
ABT FAN UNIT
PERFORMANCE CURVE

PROJECT
ARCH /ENGR
CONTRACTOR

DRAWN BY: N.M
DATE: 21 MAR 84

PLATE NO

SHOP DRAWINGS

SUBMITTAL DATA

6-20-84

UEPH - CAMP JOHNSON

CAMP LEJEUNE, N. C.

MECHANICAL CONTRACTOR----------RAMSEY HEATING & AIR COND.
HWY 17 NORTH, COMMERCE DRIVE
JACKSONVILLE, N. C. 28540

****

INDEX

1. SUMMARY SHEET OF ALL EQUIPMENT FURNISHED.

2. CERTIFIED DRAWING & PRODUCT DATA DIGEST ON CARRIER MODEL 52BQA514 THRU-THE-WALL HEAT PUMP UNIT.

Par 2.2.2
a. Heat Pump.

Par 3.11.1 thru
3.11.5

SUMMARY SHEET OF ALL EQUIPMENT FURNISHED

1 - Carrier Model 52BQA514-301AA thru-the-wall heat pump unit including:

- 1 - 52AR900-011 wall sleeve
- 1 - 52BQ905-001 architectural louvered grille

F %	WATTS		FAN MOTORS			MAX FUSE SIZE AMPS	MIN CIRCUIT AMPS	RECEP-TACLE TYPE	DEHUMIDIFI-CATION (Pints/Hr)	APPROX. SHIP. WT (lb)
	Cooling	Heating‡	Hp	Indoor Fan Cfm						
				Hi/Lo	Vent					
95	745/ 715	2500/2100	1/10	280/210	70	15	13.4	A	1.5	134
95	745/ 715	3600/3200				20	19.4	B		
96	1060/1020	2500/2100				15	13.4	A	2.6	136
96	1060/1020	3600/3200				20	19.4	B		
96	1440/1415	3600/3200	1/6	315/210		20	19.6	B	3.8	140
96	1440/1415	5200/4250				30	28.5	C		
96	2000/1960	3600/3200				20	19.6	B	5.7	164
96	2000/1960	5200/4250				30	28.5	C		

TYPE

250	
20	30
B	C
5461 5871 GE4182-1 5861	9330 5930 GE4139-3 5700
20*	30

* 15 amp.

UNIT DIMENSIONS

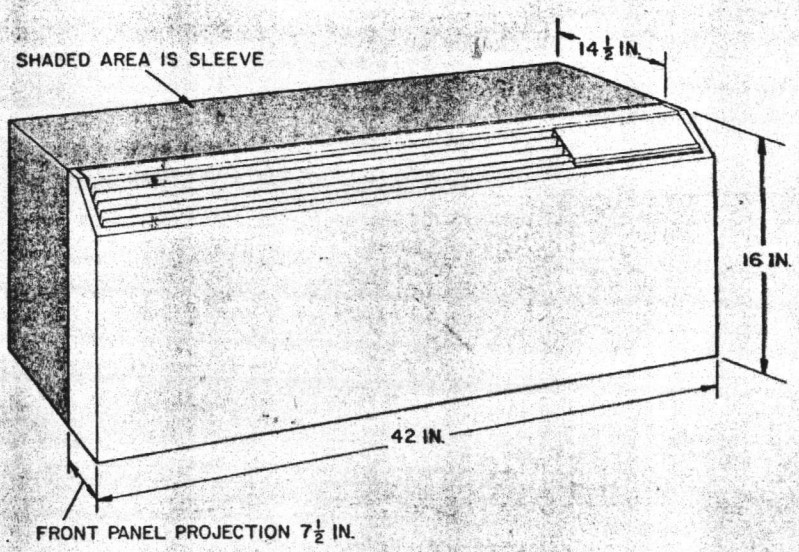

Par 2.2.2.
a. Heat Pump.
Par 2.11
2.11.5

Optional control systems

Energy Management (EM) option — Special chassis permits individual Wall Pac units to be shut off from a central location to save energy when rooms are unoccupied. Freeze Guard protection automatically maintains room temperature above 40 F to prevent costly freezing damage.

Remote Control (RC) option — Unit is operated from a remote thermostat (field supplied). Manual changeover from heat-to-cool at thermostat, plus fan cycling from thermostat.

Accessories

Sleeve dimensions and weight

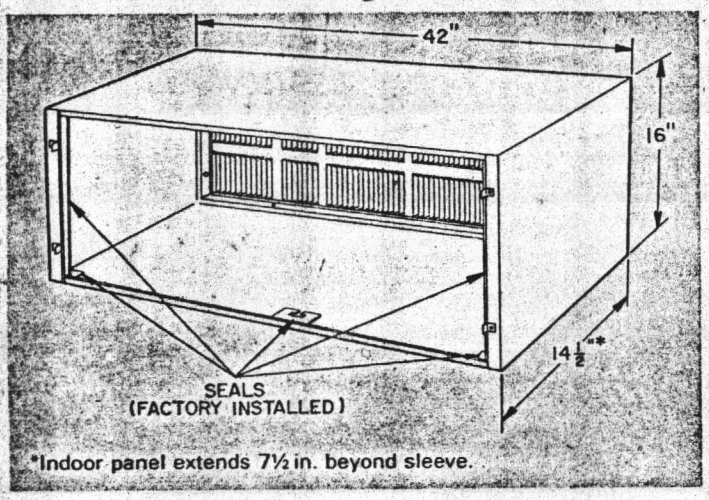

SLEEVE NO.	SHIP. WT (lb)	STANDARD GRILLE NO. (Shown on Sleeve)
52AR900011 (Less Grille)	6	52BQ908001

NOTE: Only a Carrier sleeve should be used. Use of a non-Carrier sleeve must be approved by Carrier in Syracuse, New York.

Subbase for curtain wall installation. Shipped in single pack.

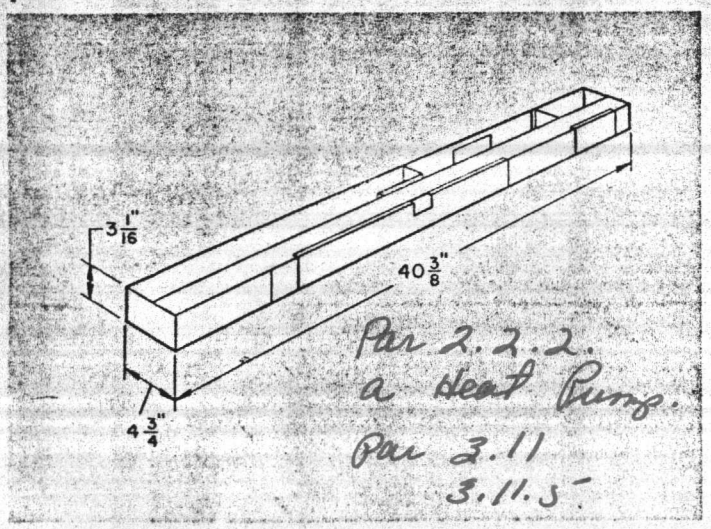

Par 2.2.2. a Heat Pump. Par 2.11 3.11.3

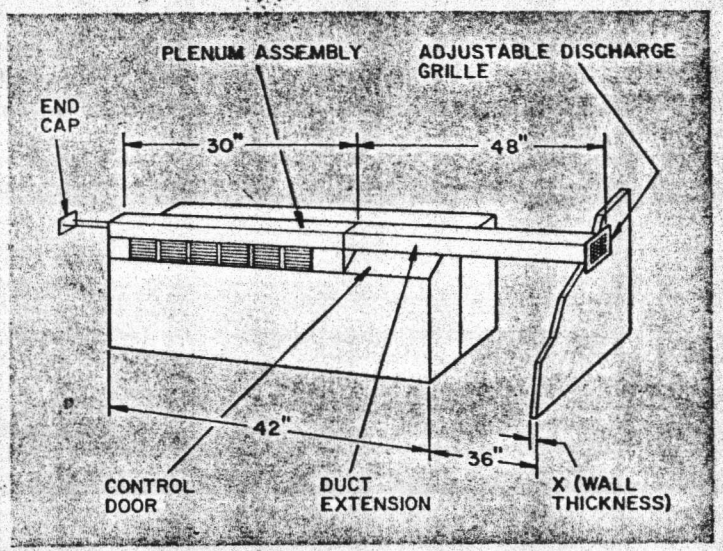

Lateral duct kit — Allows up to 40% of the unit capacity to be discharged into an adjoining room to either the right or left of the unit. Kit includes discharge plenum, 48-in. long duct, baffle, end cap, adjustable discharge grille, and internal damper to regulate airflow. To use this duct, unit must be permanently wired. Minimum sleeve projection into room is one inch.

NOTE: In order to meet UL requirements, cord connected units require accessory junction box kit (No. 52BQ909001) when used with lateral duct kit.

Lateral duct adapter plenum. Shipped in single pack.

Lateral duct extension piece. Shipped in single pack.

Architectural louvered grille — extruded aluminum. Shipped in 6-pack. Choice of aluminum or bronze baked enamel finish.

Universal drain kit. Shipped in 4-pack. For external or internal drain.

Control knob with locking setscrew. Field installed. Shipped in 12-pack.

Junction box for 230/208 v units when used with lateral duct kit or when permanent connection is desired.

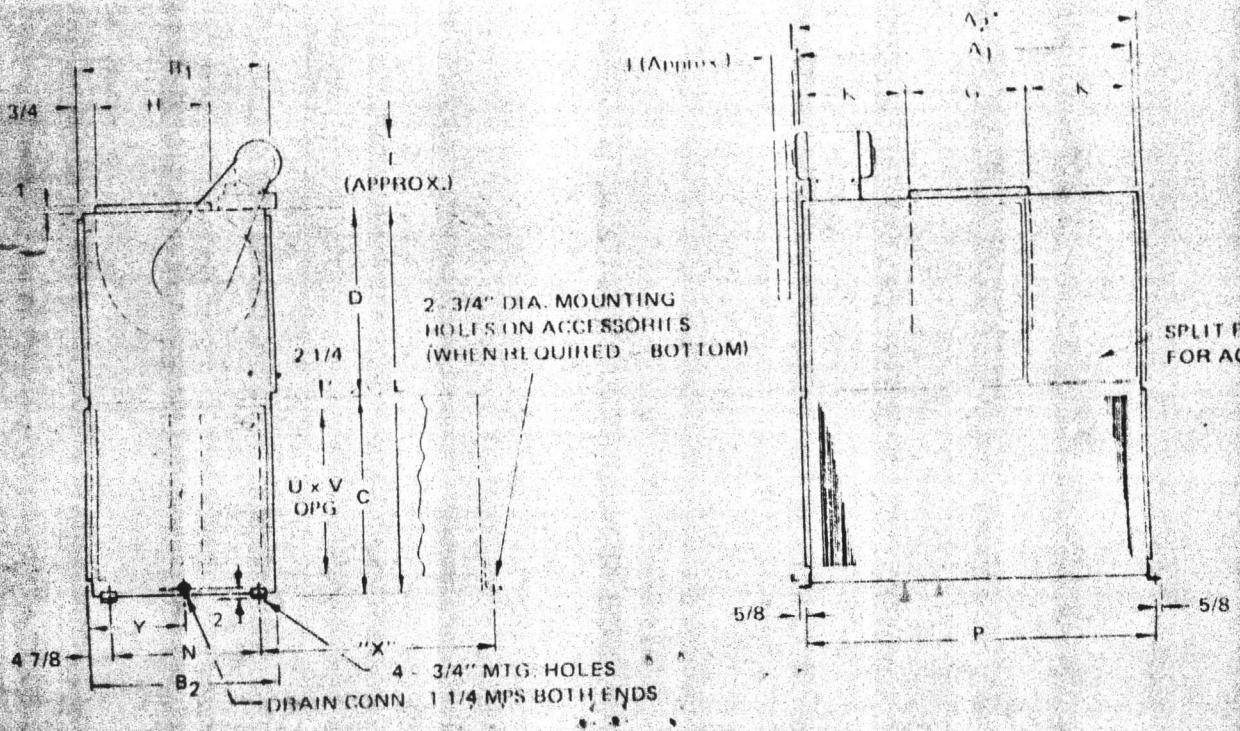

NOTE: "X" dimension is found by adding dimension of the optional sections used plus 5 1/8". Include 1/8" for gasketing where sections bolt together.

PHYSICAL DIMENSIONS (INCHES)

TAG	UNIT SIZE	A1	A2*	B1	B2	C	D	G	H	J	K	L	N	P	T	U	V	Y	X
	103	34	35 1/8	22¾	29 5/8	23	21¾	11 3/4	10 1/4	6½	11 1/8	44 7/8	20 1/2	35¾	15	18¼	29 7/8	15 1/8	
	104	40	41 1/8	25¾	29 5/8	26	24¾	12 1/4	13 1/2	6½	13 7/8	50 7/8	20 1/2	41¾	15	21¼	35 7/8	15 1/8	
	106	50	51 1/8	29	28 1/2	29¼	28	17 1/4	15 7/8	6½	16 3/8	57 3/8	19 3/8	51¾	16	24½	45 7/8	14 1/2	
	108	48	48 1/8	37¾	37 1/4	38	36¾	21 1/8	19 3/8	8	13 7/16	74 7/8	28 1/8	49¾	18	33¼	43 7/8	18 7/8	
	111	63	64 1/8	37¾	37 1/4	38	36¾	23 1/4	21 5/8	8	19 7/8	74 7/8	28 1/8	64¾	18	33¼	58 7/8	18 7/8	

*Add 4 inches for extra large face area coils.

FILTER DATA

UNIT SIZE	FLAT		ANGULAR		HEAVY DUTY	
	QUANTITY	AREA	QUANTITY	AREA	QUANTITY	AREA
103	2–16 x 20 x 2	4.4	2–16 x 25 x 2	5.6	–	–
104	2–20 x 20 x 2	5.6	4–16 x 20 x 2	8.9	–	–
106	3–16 x 25 x 2	8.4	6–16 x 20 x 2	13.3	–	–
108	2–16 x 20 x 2 2–16 x 25 x 2	10.0	6–16 x 25 x 2	16.7	[illegible]	[illegible]
111	6–16 x 20 x 2	13.3	6–20 x 25 x 2	20.0		

FAN DISCHARGE ARRANGEMENTS

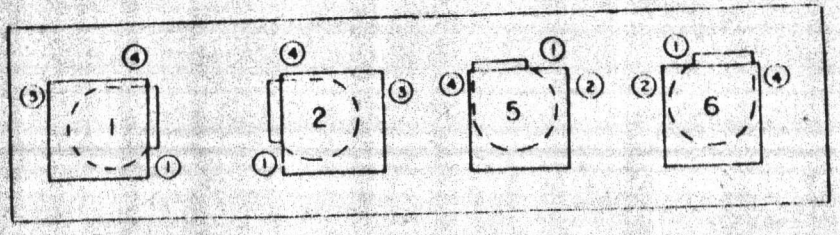

Per 2.2.2. b. A.H.U. Par. 3.2

UNIT ARRANGEMENTS

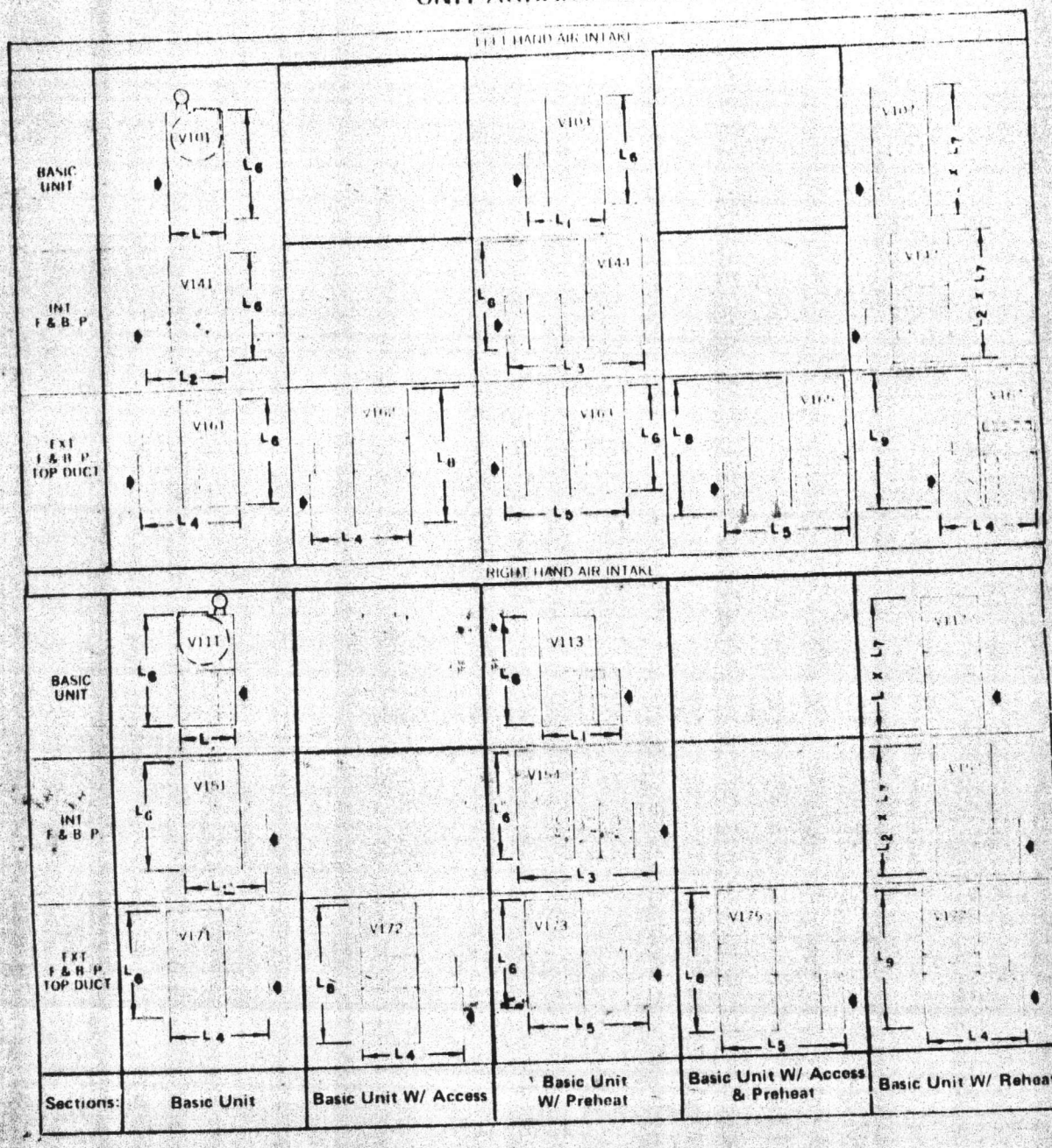

UNIT SIZE	DIMENSIONS (INCHES) L	L1*	L2	L3*	L4	L5*	L6	L7*	L8	L9
103	29 5/8	36 1/4	26 1/2	61 1/4	37 5/8	44 1/4	44 7/8	51 1/2	61	69 5/
104	29 5/8	26 1/4	37 3/4	62 1/2	37 7/8	44 1/2	50 7/8	57 1/2	69	75 5/
106	28 1/2	36 1/8	37 5/8	62 3/8	37 3/4	44 3/8	57 3/8	64	74 1/2	82 1/
108	37 1/4	43 7/8	46 3/8	71 1/8	48 3/8	55	74 7/8	81 1/2	93	99 5/
111	37 1/4	43 7/8	46 3/8	71 1/8	48 3/8	55	74 7/8	81 1/2	93	99 5/

NOTE: For overall unit length, add dimensions of accessories not included in above "L" dimension.

ACCESSORY ARRANGEMENTS

FLAT FILTER	ANGULAR FILTER	HEAVY DUTY FILTER	COMB. ANGULAR FILTER AND MIXING BOX WITH DAMPERS			WITHOUT DAMPERS		
A1*	A4*	A5*	B4*	C4*	D4*	E4*	F4*	G4

*Replace asterisk with a "0" for no filters; "1" for throwaway filters, "2" for cleanable filters; "3" for cleanable high velocity filters and "4" throwaway high performance filters.

Par. 2.2.
b. A.H.U.
Par. 3.2

ACCESSORIES

☐ ACCESS BYPASS SPACER SECTION

OPENING PROVIDED WHEN USED AS BY-PASS SPACER SECTION

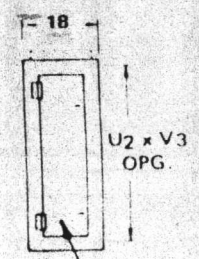

HINGED ACCESS DOOR BOTH ENDS

FILTER SECTIONS

☐ FLAT ☐ ANGULAR ☐ HEAVY DUTY *

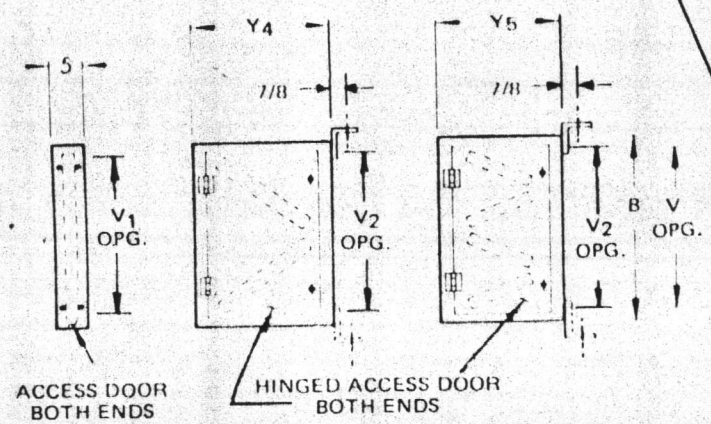

ACCESS DOOR BOTH ENDS

HINGED ACCESS DOOR BOTH ENDS

*Available in unit size 111 only.

☐ COMBINATION MIXING BOX AND ANGULAR FILTER SECTION

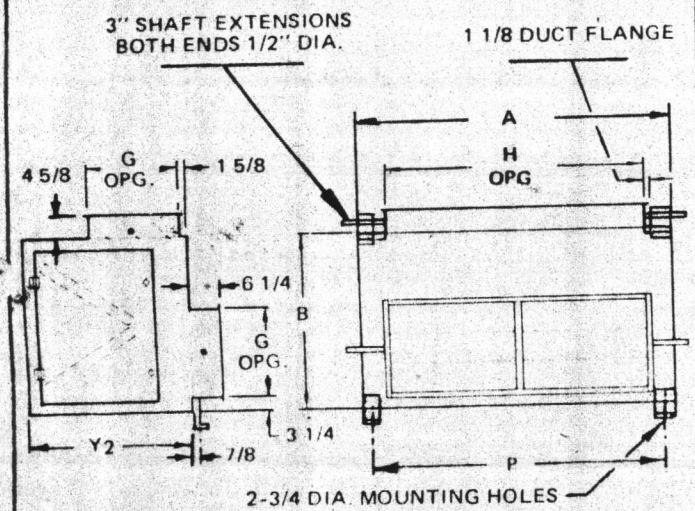

NOTE: When back and bottom openings are required, mixing box is inverted. (Top and bottom openings also available.)

☐ FACE AND BYPASS DAMPER SECTIONS

INTERNAL ☐ EXTERNAL ☐

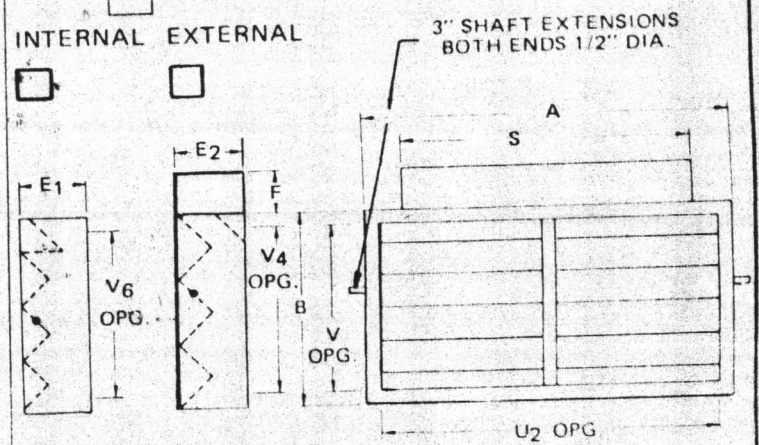

☐ HEATING COIL SECTION (1 & 2 ROW ONLY)*

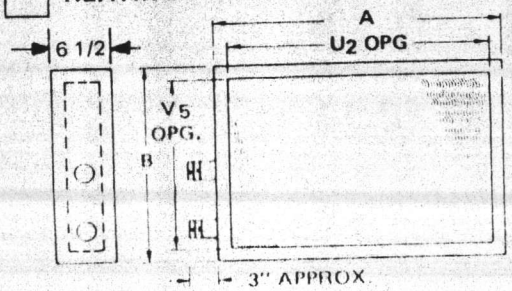

*SMALL & LARGE FACE AREA COILS ONLY

Par. 2.2.2.
6. A.H.U.
Par. 3.2

NOTE: When sections are bolted together, add 1/8" for gasketing.

UNIT SIZE	A	B	E1	E2	F	G	H	P	S	T*	U1	U2	V1	V2	V3	V4	V5	V6	Y2	Y4	Y5
103	34	21 5/8	6¼	7 7/8	6	12 3/8	25 3/8	35¾	33 5/8	25½	30 5/8	29 7/8	17 5/8	18¼	17½	17 3/8	17½	18¼	22½	19½	NA
104	40	24 5/8	8	8 1/8	6 5/8	12 3/8	31 3/8	41¾	39 5/8	20½	36 5/8	35 7/8	20	21¼	20½	20 3/8	20½	21¼	23	19	NA
106	50	27 7/8	9	9 1/8	7 1/8	12 3/8	41 3/8	51¾	49 5/8	22	46 5/8	45 7/8	23 1/8	24½	23¼	23	23¼	24½	27¼	22¼	NA
108	48	36 5/8	9	11	9 5/8	18 3/8	39 3/8	49¾	47 5/8	25½	44 5/8	43 7/8	32 1/2	33¼	32½	30 7/8	32½	33¼	33½	26	NA
111	63	36 5/8	9	11	9 5/8	18 3/8	54 3/8	64¾	62 5/8	25½	59 5/8	58 7/8	32 1/2	33¼	32½	30 7/8	32½	33¼	33½	26	23 1/8

NA - Not available

*Maximum clearance required for filter removal

McQUAY GROUP

McQUAY-PERFEX INC.
13600 INDUSTRIAL PARK BLVD
P.O. BOX 1551
MINNEAPOLIS, MINNESOTA 55440

CERTIFIED PERFORMANCE DATA

SOLD TO: Ramsey Air Conditioning, Inc.
Jacksonville, NC

McQUAY ORDER NO. GO.

DATE DR. 3-14-84

CUST P.O. 0519

JOB: Unaccompanied Enlisted Personnel Housing, MCB
Camp Lejeune, NC

REP. Hoffman & Hoffman

REP P.O. 22-1115

12 COPIES | X FOR APPR'L | FOR RECORD

CONSULTING ENGINEER:
J. N. Pease, Assoc.
Charlotte, NC

REV NO.	BY	DATE	WAS

SCHEDULE FOR CERTIFIED DIMENSIONS

SEASONCON Air Cooled Condensing Units

TYPE RHP	SIZES 050-100	DRAWING NO. 380543Y
TYPE ALP	SIZES 016-033	DRAWING NO. 380532Y
	SIZES 037-078	DRAWING NO. 380609Y
	SIZES 089-159	DRAWING NO. 380599Y

SEASONPAK Air Cooled Water Chiller

TYPE ALR	SIZES 012-030	DRAWING NO. 380531Y
	SIZES 035-065	DRAWING NO. 380610Y
	SIZES 075-130	DRAWING NO. 380600Y

DIRECT EXPANSION COOLER

TYPE CDE	DRAWING NUMBER 265527Y

TAG	McQUAY ITEM NO.	MODEL NUMBER	QTY.	ELEC. CHARAC. V-Hz-P	KW INPUT (1)	CAPAC. TONS	HEAT RECOVERY MODE		SUCT. TEMP. (2)	COOLER (4)				HEAT RECOVERY CONDENSERS				AMB. AIR	CONTROL STEPS	RECOVERED HEAT (5)
							KW Input (1)	Capac. Tons		GPM	EWT	LWT	P.D.	GPM	EWT	LWT	P.D.			
ACC	090	ALR-084	2	460-60-3	96.6	81.1	-	-	-	229	50.5	42	12	-	-	-	-	90	4	-

NOTES:
1. KW Input is for total unit (compressors + fans + controls).
2. Saturated Suction Temperature at the compressor.
3. All units employ Refrigerant 22.
4. .0005 Fouling factor.
5. Total heat rejection in MBH available for heat recovery.

Expanded aluminum coil guard.

ADDITIONAL FEATURES AS CHECKED BELOW:

- [ ] HEAT RECOVERY
- [X] CHILLED WATER FLOW SWITCH (FIELD INSTALLED)
- [ ] SPRING UNIT ISOLATORS [ ] RUBBER-IN-SHEAR UNIT ISOLATORS
- [ ] CONTROL CIRCUIT TRANSFORMER
- [X] LOW AMBIENT OPERATION TO 40 F. AMB. [ ] SPEEDTROL [ ] DAMPERTROL
- [ ] SUCTION, DISCHARGE & OIL GAUGES
- [X] 5-MINUTE COMPRESSOR LOCKOUT TIMER
- [ ] PART WINDING START (COMPRESSOR(S) ONLY)
- [ ] ACOUSTICAL COMPRESSOR ENCLOSURE
- [ ] 4 YEAR EXTENDED COMPRESSOR WARRANTY
- [ ] HOT GAS BYPASS

Par 2.2.2.
C. Water Chiller
Par 3.4

McQUAY GROUP McQUAY-PERFEX INC.
P.O. Box 1551, Minneapolis, Mn. 55440

SEASONPAK
AIR COOLED WATER CHILLER

CERTIFIED DRAWING
380610Y

TYPE ALR
035A THRU 094A

McQuay certifies that it will furnish equipment in accordance with this drawing and specifications, and subject to its published warranty. Purchaser's approval of this drawing signifies that the equipment is acceptable under the provisions of the job specifications. Any change made hereon by any person whomsoever is subject to acceptance by McQuay at its home office.

GENERAL SPECIFICATIONS

CABINET CONSTRUCTION – Galvanized steel cabinet with baked enamel finish. Continuous galvanized steel channel base.

COMPRESSORS – Accessible hermetic with suction and discharge service valves, force feed lubrication, crankcase heater, inherent motor protection, and initial oil charge. Mounted on glass fiber isolators.

CONDENSER COIL – Copper tube, aluminum fin with integral subcooler section.

CONDENSER FANS – Direct drive propeller type with heavy gauge close mesh guard.

CONDENSER FAN MOTORS – Three phase, open drip-proof ball bearing type with inherent overload protection in all three legs.

COOLER – Shell and through tube with removable heads and internally finned tubes. ASME constructed and stamped. Dual refrigerant circuits (except ALR-035A). Insulated and protected by a sheet metal enclosure. Resistance type heating cable and ambient thermostat for freeze protection to -20F with separate 115 volt power supply (may tap control circuit power supply at field option). Drain and vent fittings.

PIPING AND ACCESSORIES – Manual liquid line shut-off valve, filter drier with replaceable core, liquid line solenoid valve, sight glass/moisture indicator, thermal expansion valve and suction line insulation. Spring loaded 425 psig relief valve and purge valve.

CONTROL CENTER – Weatherproof enclosure and completely wired. Includes: system control stop switch, dual pumpdown switches, oil safety control, high and low pressure cut-outs, water temperature controller, water freeze protection, FANTROL fan cycling pressure switches, compressor and fan motor contactors, time delay fuses for each compressor, fan motor time delay fusing, control circuit and cooler heater fusing, compressor sequence-start timers. A separate 115 volt control circuit power supply is required as standard, or optional control transformer for single point power connection.

All Dimensions in inches

060B, 065B
076A, 084A
094A 050A 040A 035A

Fan arrangements

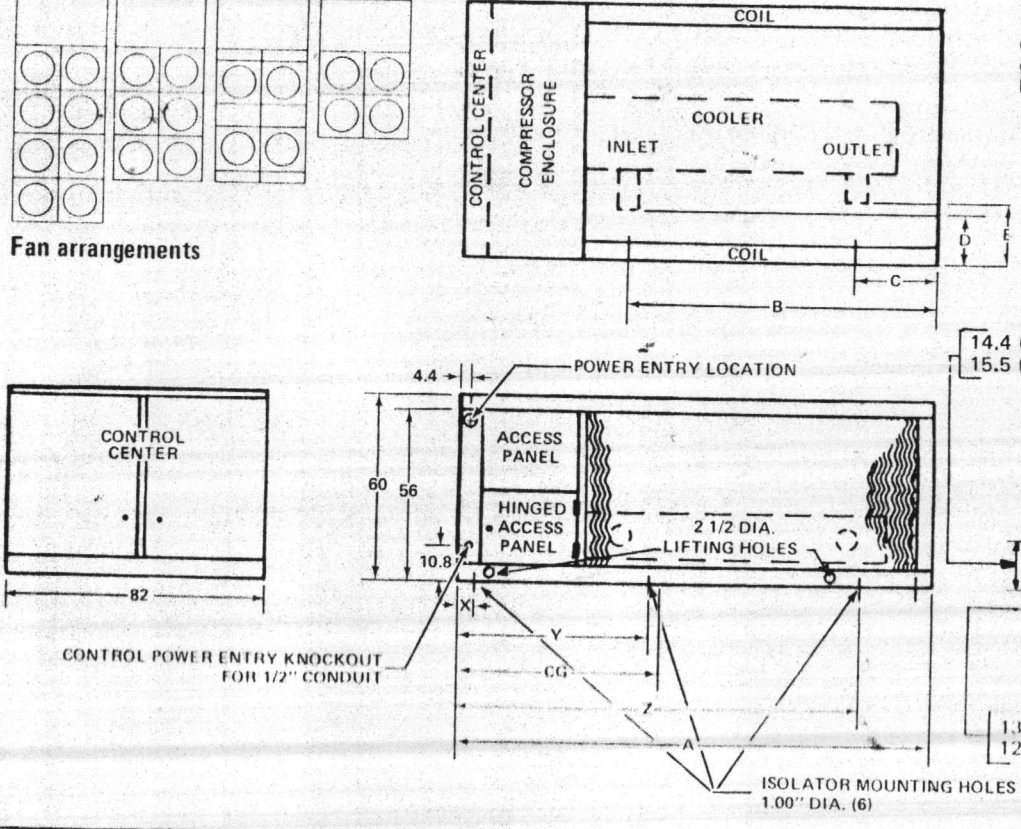

NOTE: All NPS chilled water connections furnished with grooves for "Victaulic" couplings, by others.

Par 2.2.2 c. Water Chiller Par 3.4

UNIT SIZE	LENGTH A	CENTER OF GRAVITY CG	WATER CONNECTIONS SIZE	B	C	D	E	ISOLATOR LOCATIONS X	Y	Z
035A	128	58	3 NPT	72.5	7.6	15.9	23.9	8.5	50	119.5
040A	168	71	3 NPT	112.5	11.6	15.9	23.9	8.5	50	148.0
050A	168	71	3 NPT	109.4	36.1	15.9	23.9	8.5	50	148.0
060B	208	85	4 NPS	149.4	64.1	18.9	26.9	8.5	50	188.0
065B	208	87	4 NPS	149.4	52.1	18.9	26.9	8.5	50	188.0
076A	208	84	5 NPS	148.3	77.0	18.5	27.4	8.5	50	188.0
084A	208	84	5 NPS	148.3	65.0	18.5	27.4	8.5	50	188.0
094A	208	89	5 NPS	148.3	41.0	18.5	27.4	8.5	50	188.0

ELECTRICAL DATA

UNIT SIZE	RATED LOAD AMPS						UNIT AMPACITY		
	208V/60Hz/3P		230V/60Hz/3P		460/60Hz/3P & 380V/50Hz/3P		208V/60Hz/3P	230V/60Hz/3P	460V/60Hz/3P & 380/50Hz/3P
	COMPRESSORS	FANS	COMPRESSORS	FANS	COMPRESSORS	FANS			
035A	(1) 121	(4) 5.2	(1) 121	(4) 5.2	(1) 61	(4) 2.6	172	172	87
040A	(1) 64 (1) 80	(4) 5.2	(1) 64 (1) 80	(4) 5.2	(1) 32 (1) 41	(4) 2.6	185	185	94
050A	(2) 98	(6) 5.2	(2) 98	(6) 5.2	(2) 53	(6) 2.6	252	252	135
060B	(1) 98 (1) 121	(8) 5.2	(1) 98 (1) 121	(8) 5.2	(1) 52 (1) 61	(8) 2.6	291	291	150
065B	(1) 121 (1) 153	(8) 5.2	(1) 121 (1) 138	(8) 5.2	(1) 61 (1) 69	(8) 2.6	354	335	170
076A	–	(8) 5.2	(2) 140	(8) 5.2	(2) 70.5	(8) 2.6	–	362	182
084A	(2) 177	(8) 5.2	(2) 177	(8) 5.2	(2) 90	(8) 2.6	446	446	226
094A	(2) 196	(8) 5.2	(2) 196	(8) 5.2	(2) 98	(8) 2.6	489	489	244

UNIT SIZE	LOCKED ROTOR AMPS								
	208V/60Hz/3P			230V/60Hz/3P			460V/60Hz/3P & 380V/50Hz/3P		
	COMPRESSORS		FANS	COMPRESSORS		FANS	COMPRESSORS		FANS
	AL START	PW START		AL START	PW START		AL START	PW START	
035A	(1) 565	(1) 340	(4) 40	(1) 565	(1) 340	(4) 40	(1) 283	(1) 150	(4) 20
040A	(1) 308 (1) 428	(1) 188 (1) 250	(4) 40	(1) 308 (1) 428	(1) 188 (1) 250	(4) 40	(1) 154 (1) 214	(1) 82 (1) 100	(4) 20
050A	(2) 470	(2) 292	(6) 40	(2) 470	(2) 292	(6) 40	(1) 235	(2) 121	(6) 20
060B	(1) 470 (1) 565	(1) 292 (1) 340	(8) 40	(1) 470 (1) 565	(1) 292 (1) 340	(8) 40	(1) 235 (1) 283	(1) 121 (1) 150	(8) 20
065B	(1) 565 (1) 625	(1) 340 (1) 388	(8) 40	(1) 565 (1) 594	(2) 340	(8) 40	(1) 283 (1) 297	(1) 150 (1) 147	(8) 20
076A	–	–	(8) 40	(2) 575	(2) 340	(8) 40	(2) 288	–	(8) 20
084A	(2) 1074	(2) 646	(8) 40	(2) 1074	(2) 646	(8) 40	(2) 537	(2) 420	(8) 20
094A	(2) 1070	(2) 644	(8) 40	(2) 1070	(2) 644	(8) 40	(2) 535	(2) 428	(8) 20

NOTES: 1) Compressor RLA values are for wire sizing purposes only and do not reflect normal operating current draw.
2) Unit ampacity is 125% of the rated load amps of the largest motor plus 100% of the rated load amps of all other motors.
3) Allowable voltage tolerances: **50 Hertz electrical systems:** Unit nameplate 380V/50Hz/3P – 360V to 418V.

60 Hertz electrical systems: Unit nameplate 208V/60Hz/3P – 187V to 229V. (Except ALR-065B: 187V to 220V.)
Unit nameplate 230V/60Hz/3P – 207V to 253V.
Unit nameplate 460V/60Hz/3P – 414V to 506V.

PHYSICAL DATA

UNIT SIZE	FAN HP EACH	APPROXIMATE OPERATING WT. – LBS.	OPERATING REFRIGERANT CHARGE – LBS. (R-22)
035A	(4) 1.5	3290	35
040A	(4) 1.5	4280	(2) 25
050A	(6) 1.5	4960	(2) 35
060B	(8) 1.5	5590	(2) 35
065B	(8) 1.5	5900	(2) 44
076A	(8) 1.5	6180	(2) 53
084A	(8) 1.5	6590	(2) 56
094A	(8) 1.5	6700	(2) 58

Par. 2.2.2
c. Water Chiller

Par 3.4

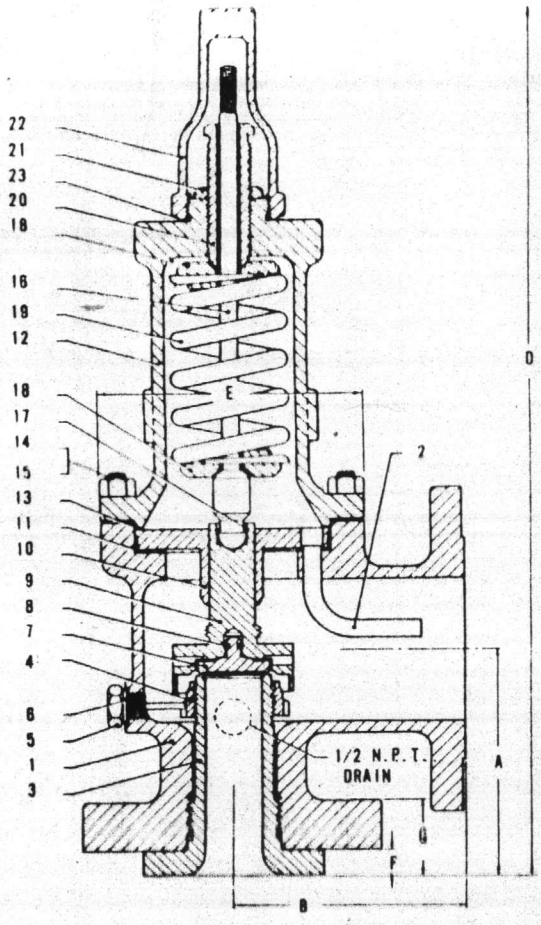

REF. NO.	NOMENCLATURE	MATERIAL
1	BASE 1905 - 1916	ASTM A216 GRADE WCB CARBON STEEL
	1920 - 1926	ASTM A217 GRADE WC1 ALLOY STEEL
2	EDUCTOR TUBE	ASTM A479 TYPE 304 STAINLESS STEEL
3	NOZZLE	ASTM A182 GRADE F316 STAINLESS STEEL
4	ADJUSTING RING	ASTM A351 GRADE CA-15 STAINLESS STEEL
5	ADJUSTING RING PIN	
	RING PIN HEAD	AISI 416 STAINLESS STEEL
	RING PIN STEM	AISI 416 STAINLESS STEEL
6	ADJ RING PIN GASKET	AISI 316 STAINLESS STEEL-ASBESTOS FILLED
7	DISC	ASTM A479 TYPE 316 STAINLESS STEEL
8	DISC RETAINER	17-7PH CONDITION A STAINLESS STEEL
9	DISC HOLDER	ASTM A479 TYPE 304 STAINLESS STEEL
10	GUIDE	
	GUIDE SLEEVE	ASTM A479 TYPE 430 STAINLESS STEEL
	GUIDE FLANGE	ASTM A276 GRADE 410 CONDITION A STAINLESS STEEL
11	GUIDE GASKET	SOFT IRON
12	BONNET	ASTM A216 GRADE WCB CARBON STEEL
13	BONNET GASKET	SOFT IRON
14	BASE STUD	ASTM A193 GRADE B7 ALLOY STEEL
15	STUD NUT	ASTM A194 CLASS 1 STEEL
16	SPINDLE	
	SPINDLE HEAD	ASTM A276 GRADE 414 STAINLESS STEEL TO ENG. INST. MA-7
	SPINDLE STEM	AISI 416 STAINLESS STEEL
17	SPINDLE RETAINER	17-7PH CONDITION A STAINLESS STEEL
18	SPRING WASHER	AISI C1018 CARBON STEEL
19	SPRING	
	TYPES 1900Hc	CARBON STEEL (PHOSPHATED)
	TYPES 1900Ht	TUNGSTEN STEEL (NOTE 2)
20	ADJUSTING SCREW	ASTM A276 GRADE 414 STAINLESS STEEL TO ENG. INST. MA-7
21	ADJUSTING SCREW NUT	AISI 416 STAINLESS STEEL
22	CAP	ASTM A216 GRADE WCB CARBON STEEL (NOTE 1)
23	CAP GASKET	AISI 316 STAINLESS STEEL ASBESTOS FILLED

NOTES:

1. CAP MATERIAL ON 1905H, 1906H, 1910H, 1920H, AND 1922H IS AISI C1030 CARBON STEEL.
2. SPRINGS WITH WIRE SIZE 1/2" & SMALLER WILL BE SUPPLIED IN INCONEL X-750 MATERIAL.

TYPE	INLET (EXCEPT AS NOTED)	OUTLET	A	B	D	E	F	G	K	L	M	N	P	Q	R	APPROX. WEIGHT
1905Hc 1905Ht	1-1/2" 150# ANSI ST'D RF OR RJ	3" 150# ANSI ST'D RF	5-1/8	4-7/8	19-1/2	6-1/8	11/16	1-1/4	1-3/16	9	12	19	20	4-5/8	3-3/8	60
1906Hc 1906Ht	1-1/2" 300# ANSI ST'D RF OR RJ	3" 150# ANSI ST'D RF	5-1/8	4-7/8	19-1/2	6-1/8	11/16	1-9/16	1-3/16	8	12	19	20	4-5/8	3-3/8	60
1910Hc 1910Ht	2" 300# ANSI ST'D RF OR RJ	3" 150# ANSI ST'D RF	5-1/8	4-7/8	20-1/4	6-1/8	11/16	1-11/16	1-3/16	8	12	19	20	4-3/4	3-3/8	65
1912Hc 1912Ht	2" 600# ANSI ST'D RF OR RJ	3" 150# ANSI ST'D RF	6-1/16	6-3/8	23	6-7/8	11/16	1-11/16	1-3/8	10	12	19	20	4-7/8	3-3/8	85
1914Hc 1914Ht	2" 900# ANSI ST'D RF OR RJ	3" 150# ANSI ST'D RF	6-1/16	6-3/8	26	8-1/4	11/16	2-3/16	1-5/8	14	18	27	30	5	5-5/8	130
1916Hc 1916Ht	2" 1500# ANSI ST'D RF OR RJ	3" 300# ANSI ST'D RF	6-1/16	6-3/8	26	8-1/4	11/16	2-3/16	1-5/8	14	18	27	30	5	5-5/8	140
1920Ht	2" 300# ANSI ST'D RF OR RJ	3" 150# ANSI ST'D RF	5-1/8	4-7/8	20-1/4	6-1/8	11/16	1-11/16	1-3/16	8	12	19	20	4-3/4	3-3/8	85
1922Ht	2" 600# ANSI ST'D RF OR RJ	3" 150# ANSI ST'D RF	5-1/8	4-7/8	20-1/4	6-1/8	11/16	1-11/16	1-3/16	8	12	19	20	4-3/4	3-3/8	85
1924Ht	2" 900# ANSI ST'D RF OR RJ	3" 150# ANSI ST'D RF	6-1/16	6-3/8	23	6-7/8	11/16	2-3/16	1-3/8	10	12	19	20	4-7/8	3-3/8	90
1926Ht	2" 1500# ANSI ST'D RF OR RJ	3" 300# ANSI ST'D RF	6-1/16	6-3/8	26	8-1/4	11/16	2-3/16	1-5/8	14	18	27	30	5	5-5/8	140

1888 #/HR SET @ 30 PSI

TAG: Domestic Hot Water Storage Heater

CONSOLIDATED SAFETY RELIEF VALVE

INDUSTRIAL VALVE AND INSTRUMENT DIVISION (DRESSER)

ALEXANDRIA, LOUISIANA

CERTIFIED: L. D. Cook

REV.	DATE	CKD. BY	ENG. APPD
2	3/10/75	[illegible]	[illegible]

1900H REV. 2

Par. 2.2.2
d. Temp control
Par. 6.2.10

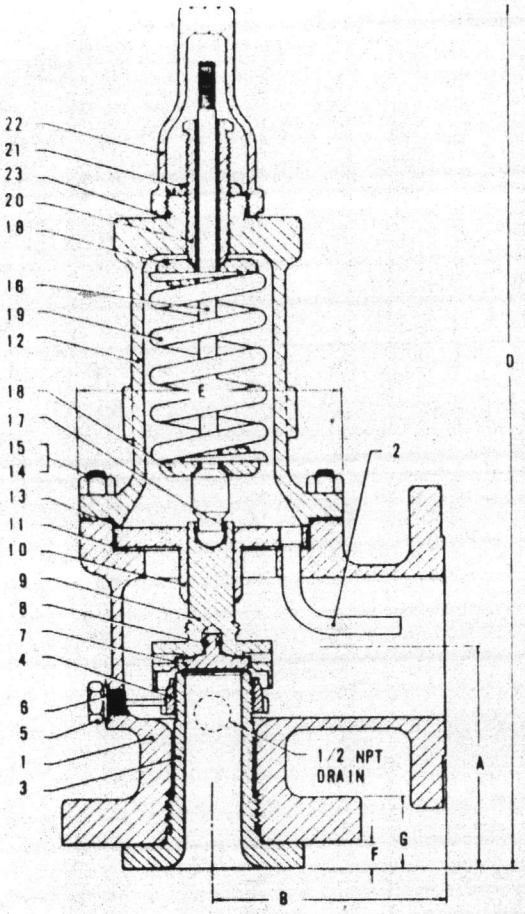

REF NO.	NOMENCLATURE	MATERIAL
1	BASE 1905-1916	ASTM A216 GRADE WCB CARBON STEEL
	1920 1926	ASTM A217 GRADE WC1 ALLOY STEEL
2	EDUCTOR TUBE	ASTM A479 TYPE 304 STAINLESS STEEL
3	NOZZLE	ASTM A182 GRADE F316 STAINLESS STEEL
4	ADJUSTING RING	19% CHROME STAINLESS STEEL TO ENG. INST. MA-12
5	ADJUSTING RING PIN	
	RING PIN HEAD	AISI 416 STAINLESS STEEL
	RING PIN STEM	AISI 416 STAINLESS STEEL
6	ADJ. RING PIN GASKET	AISI 316 STAINLESS STEEL ASBESTOS FILLED
7	DISC	ASTM A479 TYPE 316 STAINLESS STEEL
8	DISC RETAINER	17-7PH CONDITION A STAINLESS STEEL
9	DISC HOLDER	ASTM A351 GRADE CF8 STAINLESS STEEL
10	GUIDE	
	GUIDE SLEEVE	ASTM A479 TYPE 430 STAINLESS STEEL
	GUIDE FLANGE	ASTM A276 GRADE 410 CONDITION A STAINLESS STEEL
11	GUIDE GASKET	SOFT IRON
12	BONNET	ASTM A216 GRADE WCB CARBON STEEL
13	BONNET GASKET	SOFT IRON
14	BASE STUD	ASTM A193 GRADE B7 ALLOY STEEL
15	STUD NUT	ASTM A194 CLASS 1 STEEL
16	SPINDLE	
	SPINDLE HEAD	ASTM A276 GRADE 414 STAINLESS STEEL TO ENG. INST. MA-7
	SPINDLE STEM	AISI 416 STAINLESS STEEL
17	SPINDLE RETAINER	17-7PH CONDITION A STAINLESS STEEL
18	SPRING WASHER	AISI C1020 CARBON STEEL
19	SPRING	
	TYPES 1900Kc	CARBON STEEL (PHOSPHATED)
	TYPES 1900Kt	TUNGSTEN STEEL (NOTE 1)
20	ADJUSTING SCREW	ASTM A276 GRADE 414 STAINLESS STEEL TO ENG. INST. MA-7
21	ADJUSTING SCREW NUT	AISI 416 STAINLESS STEEL
22	CAP	ASTM A216 GRADE WCB CARBON STEEL
23	CAP GASKET	AISI 316 STAINLESS STEEL ASBESTOS FILLED

NOTES:
1. SPRING MATERIAL, WIRE SIZE 1/2" AND SMALLER IS INCONEL X-750.

TYPE	INLET (EXCEPT AS NOTED)	OUTLET	A	B	D	E	F	G	K	L	M	N	P	Q	R	APPROX. WEIGHT
1905Kc 1905Kt	3" 150# ANSI STD. RF OR RJ	4" 150# ANSI STD. RF	6-1/8	6-3/8	24-1/2	7-1/4	11/16	1-7/16	1-3/8	10	12	19	20	4-3/4	3-3/8	110
1906Kc 1906Kt	3" 300# ANSI STD. RF OR RJ	4" 150# ANSI STD. RF	6-1/8	6-3/8	24-1/2	7-1/4	11/16	1-13/16	1-3/8	10	12	19	20	4-3/4	3-3/8	115
1910Kc 1910Kt	3" 300# ANSI STD. RF OR RJ	4" 150# ANSI STD. RF	6-1/8	6-3/8	28	7-3/4	11/16	1-15/16	1-5/8	14	18	27	30	4-3/4	5-5/8	140
1912Kc 1912Kt	3" 600# ANSI STD. RF OR RJ	4" 150# ANSI STD. RF	7-1/4	7-1/8	29-1/4	7-3/4	11/16	1-15/16	1-5/8	14	18	27	30	4-3/4	5-5/8	150
1914Kc 1914Kt	3" 900# ANSI STD. RF OR RJ	6" 150# ANSI STD. RF	7-13/16	8-1/2	35-1/4	10-1/2	11/16	2-3/16	2-1/4	20	24	36	44	6-1/4	6-1/2	300
1916Kc 1916Kt	3" 1500# ANSI STD. RF OR RJ	6" 300# ANSI STD. RF	7-3/4	8-1/2	35-1/4	10-1/2	11/16	2-9/16	2-1/4	20	24	36	44	6-1/4	6-1/2	320
1920Kt	3" 300# ANSI STD. RF OR RJ	4" 150# ANSI STD. RF	6-1/8	6-3/8	28	7-3/4	11/16	1-15/16	1-5/8	14	18	27	30	4-3/4	5-5/8	140
1922Kt	3" 600# ANSI STD. RF OR RJ	4" 150# ANSI STD. RF	6-1/8	6-3/8	28	7-3/4	11/16	1-15/16	1-5/8	14	18	27	30	4-3/4	5-5/8	140
1924Kt	3" 900# ANSI STD. RF OR RJ	4" 150# ANSI STD. RF	7-1/4	7-1/8	29-1/4	7-3/4	11/16	2-3/16	1-5/8	14	18	27	30	4-3/4	5-5/8	165
1926Kt	3" 1500# ANSI STD. RF OR RJ	6" 300# ANSI STD. RF	7-3/4	8-1/2	35-1/4	10-1/2	11/16	2-9/16	2-1/4	20	24	36	44	6-1/4	6-1/2	320

340 g/HR SLT @ 30 PSI
TNG Converter

CONSOLIDATED SAFETY RELIEF VALVES

DRESSER

DRESSER INDUSTRIAL VALVE & INSTRUMENT DIVISION

ALEXANDRIA, LOUISIANA

CERTIFIED: L.L. Cook

REV.	DATE	APPROVAL ENGR.		REV.
2	1/4/74	L.A. Cadel	1900K	2

Par. 2.2.2
d. Temp Controls
Par. 6.2.10

TCV-3 & TCV-4

SARCO
1951 26th ST. S.W. • P.O. BOX 119, ALLENTOWN, PA. 18105
PHONE 215 797-5830 TELEX #84-7434

Bulletin 650-K 29
MAY 1982

SC.

25 Series Engineering Data

One of the White Consolidated Industries
WCI

25T

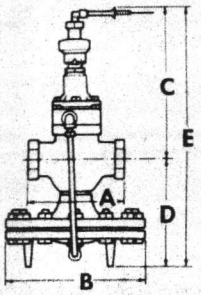

½" to 2" sizes have screwed connections

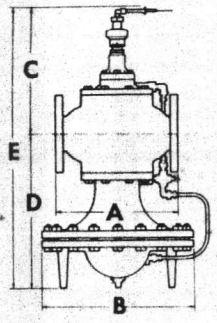

2½" to 4" sizes have flanged connections

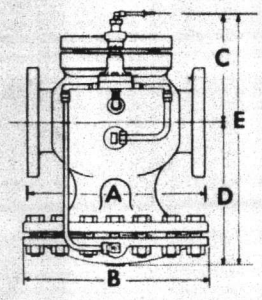

6" size has flanged connections

25P-25BP 25PA-25PI

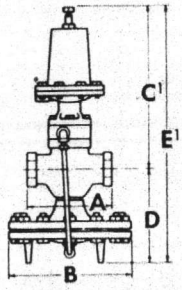

½" to 2" sizes have screwed connections

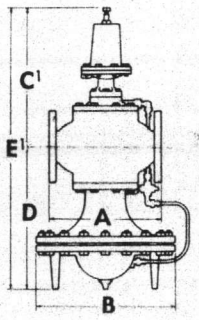

2½" to 4" sizes have flanged connections

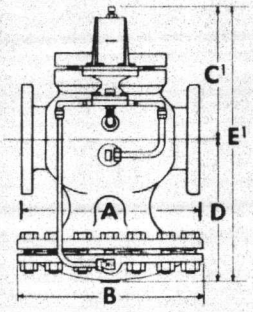

6" size has flanged connections

THERMOSTATS FOR 25T REGULATORS

Model No.	Description	Dimensions
T-1	Plain copper bulb, 8-foot brass-armored capillary tubing	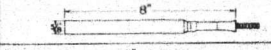
T-2	Copper bulb, union connection, 8-foot brass-armored capillary tubing	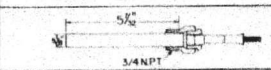
T-3	Teflon-covered bulb, 8-foot Teflon-covered capillary tubing	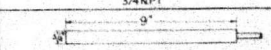
T-4	Plain copper bulb, flanged connection with adjustable extension, 8-foot brass-armored capillary tubing	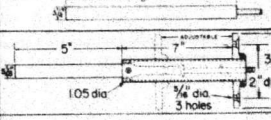
T-5	Copper bulb, union connection with brass well, 8-foot brass-armored capillary tubing	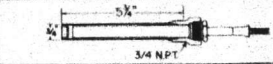
T-6	Copper bulb, union connection with Type 316 stainless steel well, 8-foot brass-armored capillary tubing	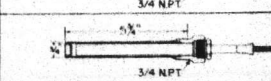
T-7	Plain copper bulb, brass extension well*, 8-foot brass-armored capillary tubing	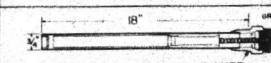
T-8	Plain copper bulb, Type 316 stainless steel extension well*, 8-foot brass-armored capillary tubing	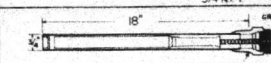
T-9	Plain copper bulb, stainless steel wall mounting bracket, 8-foot brass-armored capillary tubing	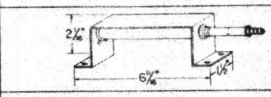
T-10	Plain stainless steel bulb, Stainless steel tubing.	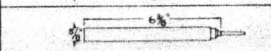
T-11	Stainless steel bulb union connection. 8' Stainless steel tubing.	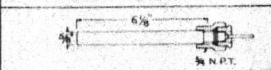
T-12	Union extension plus bulb assembly with 90° Offset, 8-foot brass-armored capillary tubing.	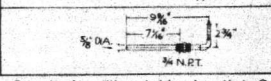

* Standard extension wells are 18" long. Longer wells in brass or stainless steel are available.

Standard capillary tubing length is 8 feet. The next standard is 15 feet, and additional lengths can be furnished on request.

Size	A	A¹ * 250 Lbs.	B	C	C¹	D	E	E¹ **	Net Wt. Lbs.*
½"	5½		7⅜	9 13/16	12 3/16	6 3/16	16	18⅜	32
¾"	5½		7⅜	9 13/16	12 3/16	6 3/16	16	18⅜	32
1"	6		8⅜	9¾	12⅛	6¾	16½	18⅞	39
1¼"	7¼		8⅝	10 5/16	12 11/16	7 1/16	17⅜	19¾	44
1½"	7¼		8⅝	10 5/16	12 11/16	7 1/16	17⅜	19¾	44
2"	8½		10⅝	10 13/16	13 5/16	8 3/16	19⅛	21½	69
2½"	10⅞	11½	13⅝	11 11/16	14	13 15/16	25⅝	27 15/16	157
3"	11¾	12½	13⅝	11 9/16	13 15/16	14 7/16	26	28⅜	188
4"	13⅞	14½	15⅝	12 13/16	15¼	16⅛	28 15/16	31⅜	284
6"	18⅛	19	19¾	9 9/16	11⅞	16 11/16	26¼	28 9/16	560

*In the 2½" to 6" sizes, dimension A is for 125 lb. ANSI flanged, and dimension A¹ is for 250 lb. ANSI flanged bodies. Net weights are based on 25P for 250 lb. flanged bodies.

**1 15/16" Less for PA without internal spring. Add 1" for Type PI Scale.

CERTIFIED FOR:

NAME OF JOB: Par 2.2.2 d. Temp Controls

CUSTOMER: Par 6.2.13 DATE

SARCO ORDER NO: BY

SARCO
1951 26th ST. S.W. • P.O. BOX 119, ALLENTOWN, PA. 18105
PHONE 215 797-5830 TELEX #84-7434
One of the White Consolidated Industries
WCI

Bulletin 650-K 29
MAY 1982

25 Series Engineering Data

TAG: Domestic Hot Water Storage Heater PRV-2 SL

25T

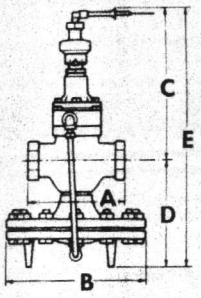

½" to 2" sizes have screwed connections

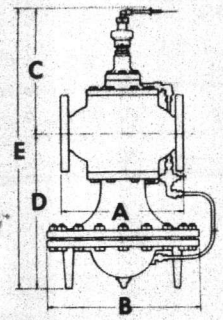

2½" to 4" sizes have flanged connections

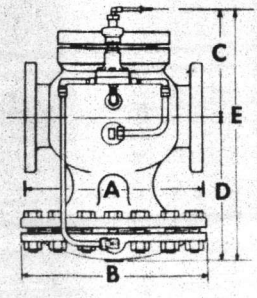

6" size has flanged connections

25P-25BP 25PA-25PI

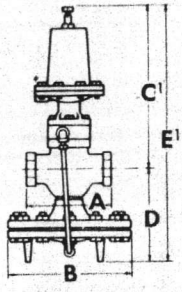

½" to 2" sizes have screwed connections

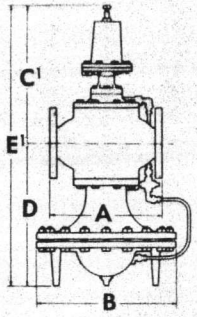

2½" to 4" sizes have flanged connections

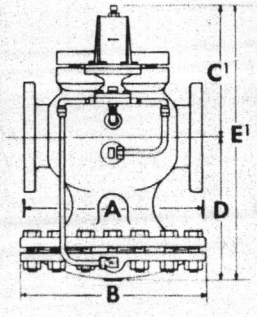

6" size has flanged connections

THERMOSTATS FOR 25T REGULATORS

Model No.	Description	Dimensions
T-1	Plain copper bulb, 8-foot brass-armored capillary tubing	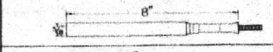
T-2	Copper bulb, union connection, 8-foot brass-armored capillary tubing	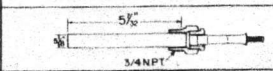
T-3	Teflon-covered bulb, 8-foot Teflon-covered capillary tubing	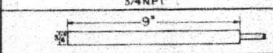
T-4	Plain copper bulb, flanged connection with adjustable extension, 8-foot brass-armored capillary tubing	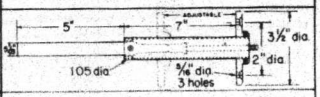
T-5	Copper bulb, union connection with brass well, 8-foot brass-armored capillary tubing	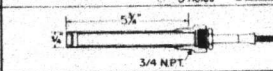
T-6	Copper bulb, union connection with Type 316 stainless steel well, 8-foot brass-armored capillary tubing	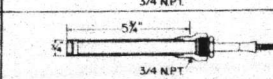
T-7	Plain copper bulb, brass extension well*, 8-foot brass-armored capillary tubing	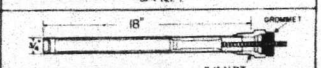
T-8	Plain copper bulb, Type 316 stainless steel extension well*, 8-foot brass-armored capillary tubing	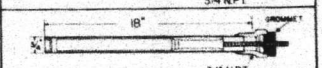
T-9	Plain copper bulb, stainless steel wall mounting bracket, 8-foot brass-armored capillary tubing	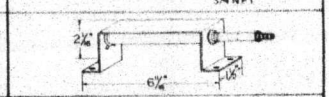
T-10	Plain stainless steel bulb, Stainless steel tubing.	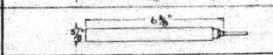
T-11	Stainless steel bulb union connection. 8' Stainless steel tubing.	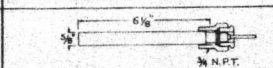
T-12	Union extension plus bulb assembly with 90° Offset, 8-foot brass-armored capillary tubing.	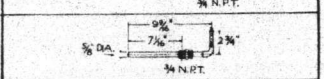

* Standard extension wells are 18" long. Longer wells in brass or stainless steel are available.

Standard capillary tubing length is 8 feet. The next standard is 15 feet, and additional lengths can be furnished on request.

Size	A	A¹ * 250 Lbs.	B	C	C¹	D	E	E¹ **	Net Wt. Lbs.*
½"	5½		7⅝	9 13/16	12 3/16	6 3/16	16	18⅜	32
¾"	5½		7⅝	9 13/16	12 3/16	6 3/16	16	18⅜	32
1"	6		8⅜	9¾	12⅛	6¾	16½	18⅞	39
1¼"	7¼		8⅝	10 5/16	12 11/16	7 1/16	17⅜	19¾	44
1½"	7¼		8⅝	10 5/16	12 11/16	7 1/16	17⅜	19¾	44
2"	8½		10⅜	10 15/16	13 5/16	8 3/16	19⅛	21½	69
2½"	10⅞	11½	13⅜	11 11/16	14	13 15/16	25⅜	27 15/16	157
3"	11¾	12½	13⅜	11 9/16	13 15/16	14 7/16	26	28⅜	188
4"	13⅞	14½	15⅜	12 13/16	15¼	16⅛	28 15/16	31⅜	284
6"	18⅛	19	19¾	9 9/16	11⅞	16 11/16	26¼	28 9/16	560

*In the 2½" to 6" sizes, dimension A is for 125 lb. ANSI flanged, and dimension A¹ is for 250 lb. ANSI flanged bodies. Net weights are based on 25P for 250 lb. flanged bodies.

**1 15/16" Less for PA without internal spring. Add 1" for Type PI Scale.

CERTIFIED FOR:

NAME OF JOB: Par. 2.2.2. d. Temp controls

CUSTOMER:

Pat. DATE 6.2.13

SARCO ORDER NO: BY

FILE NO.:	5098.95
DATE:	AUG. 15, 1983
SUPERSEDES:	5098.95
DATE:	JAN. 30, 1978

ARMSTRONG
ASME HEAT EXCHANGERS
Type WS
Steam to Water
SUBMITTAL DATA

Customer: RAMSEY AIR COND.
Job Ref.: UPEH, MCB CAMP LEJEUNE, N.C.
Engineer: DEWEY R. WINCHESTER

• ALL UNITS ARE REGULARLY CONSTRUCTED TO THE ASME CODES •

STANDARD TUBE PITCH IS 15/16" TRIANGULAR

	LOCATION	LOCATION	LOCATION
Heater Number	HE-1	WS-124-2	
No. of Passes		2	
Tube Capacity —		315 GPM	
Tube Temperature — In		159.7°F	
Tube Temperature — Out		180°F	
Steam Pressure — PSI ~~or Temp~~		15	
Press. Drop — Tubes		1.3	
Fouling Factor		.001	
ASME Stamp & Certificate	Yes ☑ No ☐	Yes ☐ No ☐	Yes ☐ No ☐
Saddles	Yes ☐ No ☑	Yes ☐ No ☐	Yes ☐ No ☐

"WS" CONSTRUCTION SPECIFICATIONS

"WS" Heat Exchangers are of the shell and tube type. The tube bundle is of "U" bend construction with the tube ends expanded into a stationary tube sheet. This construction permits ample expansion or contraction for wide temperature variations. A fluid entering the tubes of a 2 or 4 pass unit is heated by steam condensing in the single pass shell. Tube spacers properly support and space each tube for maximum efficiency in steam condensing and drainage.

MATERIALS & PRESSURES

UNIT DIAM.	TUBING COPPER (1)	SHELLS	TUBE PLATES (2)	HEADS (2)	PRESSURES — PSI TEST	WORKING ASME 2 PASS	WORKING ASME 4 PASS	WORKING ASME TYPE B 2 PASS ONLY	MAX. OPER. TEMP.
4"	¾"—18 BWG	Steel	Steel	Cast Iron	225	150	150	150[4]	375°F
6"	¾"—18 BWG	Steel	Steel	Cast Iron	225	150	150	150[4]	375°F
8"	¾"—18 BWG	Steel	Steel	Cast Iron	225	150	150	150[4]	375°F
10"	¾"—18 BWG	Steel	Steel	Cast Iron	225	—	150	150[4]	375°F
10"	¾"—18 BWG	Steel	Steel	Cast Iron	200	125[3]	—	150[4]	375°F
HE-1 → 12"	¾"—18 BWG	Steel	Steel	Cast Iron	200	125[3]	~~125[3]~~	~~150[4]~~	375°F
14"	¾"—18 BWG	Steel	Steel	Cast Iron	200	125[3]	125[3]	150[4]	375°F
16"	¾"—18 BWG	Steel	Steel	Cast Iron	200	125[3]	125[3]	150[4]	375°F
18"	¾"—18 BWG	Steel	Steel	Cast Iron	200	125[3]	125[3]	150[4]	375°F
20"	¾"—18 BWG	Steel	Steel	Cast Iron	200	125[3]	125[3]	150[4]	375°F

(1) Available in other materials — at extra cost.
(2) Available in bronze at extra cost.
(3) Available with fabricated steel flanged heads to meet ASME code for 150 psi working pressure — at ext
(4) Available on 2 — pass only with cast iron flanged heads to meet ASME code for 150 psi working pressu

Par. 2.2.2.
C. H.W. Converter.
Par 3.7

TYPE "WS" HEAT EXCHANGERS

HE-1

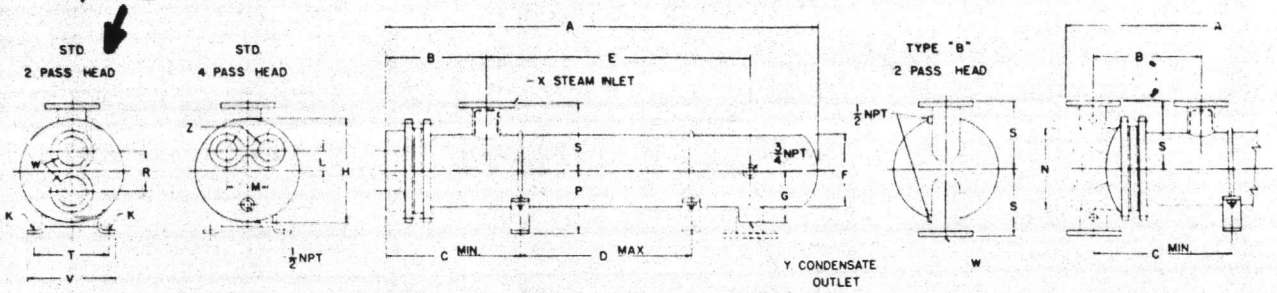

Heater Numbers		2 Pass — Standard			4 Pass — Standard			2 Pass — Type "B"			2 Pass and 4 Pass												Head Dimensions						
																							2 Pass — Standard		4 Pass — Standard			2 Pass — Type "B"	
2 Pass	4 Pass	A	B	C	A	B	C	A	B	C	D	E	F	G	H	K	P	S	T	V	X	Y	W	R	L	M	Z	W	N
WS42-2	WS42-4	28			28			29⅞			9½	15¼									2 NPT	1 NPT							
WS43-2	WS43-4	40			40			41⅞			21½	27¾									2 NPT	1 NPT							
WS44-2	WS44-4	52	7½	10	52	7½	10	53⅝	8	10½	33½	39¾	4½	3½	7¼	¾	4½	3⅜	5½	6¾	2 NPT	1 NPT	1¼ NPT	2⅝	1	2¼	1 NPT	1¼ NPT	4½
WS45-2	WS45-4	64			64			65⅞			45½	51¾									2½ NPT	1¼ NPT							
WS46-2	WS46-4	76			76			77⅞			57½	63¾									2½ NPT	1¼ NPT							
WS47-2	WS47-4	88			88			89⅞			69½	75¾									2½ NPT	1¼ NPT							
WS62-2	WS62-4	28¾			28⅞			30⅝			8	15									1 NPT								
WS63-2	WS63-4	40¾			40⅞			42⅝			20	27									2 NPT								
WS64-2	WS64-4	52¾			52⅞			54⅝			32	39									2 NPT								
WS65-2	WS65-4	64¾	8½	12	64⅞	8½	12	66⅝	8⅞	12	44	51	6⅝	4⅝	10½	¾	6½	7¾	6¾	8½	2 NPT	1 NPT	2 NPT	3¾	119/32	3 5/16	1½ NPT	2 NPT	7
WS66-2	WS66-4	76¾			76⅞			78⅝			56	63									3 NPT								
WS67-2	WS67-4	88¾			88⅞			90⅝			68	75									3 NPT								
WS68-2	WS68-4	100¾			100⅞			102⅝			80	87									3 NPT								
WS82-2	WS82-4	29⅜			29			34¼			4¼	13									2 NPT	1 NPT							
WS83-2	WS83-4	41⅜			41			46¼			16¼	25									2 NPT	1 NPT							
WS84-2	WS84-4	53⅜			53			58¼			28¼	37									3 NPT	1 NPT							
WS85-2	WS85-4	65⅜	10½	14½	65	10¼	14	70¼	12¼	16	40¼	49	8⅛	5⅝	12½	¾	7	8¼	9	10⅜	4 FLG	1 NPT	3 NPT	5	2	4	2 NPT	3 FLG	—
WS86-2	WS86-4	77⅜			77			82¼			52¼	61									4 FLG	1 NPT							
WS87-2	WS87-4	89⅜			89			94¼			64¼	73									4 FLG	1 NPT							
WS88-2	WS88-4	101⅜			101			106¼			76¼	85									6 FLG	1 NPT							
WS89-2	WS89-4	113⅜			113			118¼			88¼	97									6 FLG	1 NPT							
WS102-2	WS102-4	30⅛			30⅛			36½			4½	12½									4 FLG	1½ NPT							
WS103-2	WS103-4	42⅛			42⅛			48½			16½	24½									4 FLG	1½ NPT							
WS104-2	WS104-4	54⅛			54⅛			60½			28½	36½									6 FLG	2 NPT							
WS105-2	WS105-4	66⅛			66⅛			72½			40½	48½									6 FLG	2 NPT							
WS106-2	WS106-4	78⅛	11⅝	15¾	78⅛	11⅝	15¾	84½	13½	17⅝	52½	60½	10¾	6⅝	14⅝	⅞	9⅜	9¾	9⅝	11⅛	6 FLG	2 NPT	4 NPT	5⅞	2⅜	4¾	3 NPT	4 FLG	
WS107-2	WS107-4	90⅛			90⅛			96½			64½	72½									6 FLG	2 NPT							
WS108-2	WS108-4	102⅛			102⅛			108½			76½	84½									6 FLG	2 NPT							
WS109-2	WS109-4	114⅛			114⅛			120½			88½	96½									6 FLG	2 NPT							
WS1010-2	WS1010-4	126⅛			126⅛			132½			100½	108½									6 FLG	2 NPT							
~~WS122-2~~	~~WS122-4~~	~~42¾~~			~~42¾~~			~~48¾~~			~~13½~~	~~22¾~~									6 FLG	2 NPT							
WS124-2	~~WS124-4~~	54¾			54¾			60¾			26½	34⅞									~~6 FLG~~	~~2 NPT~~							
WS125-2	WS125-4	66¾			66¾			72¾			37½	46¾									6 FLG	2 NPT							
WS126-2	WS126-4	78¾	13⅝	19	78¾	13⅝	19	84¾	15⅛	20½	49½	58¾	12¾	7¾	16⅝	⅞	9¾	10¼	11⅝	13⅛	6 FLG	2 NPT	4 NPT	7⅛					
WS127-2	WS127-4	90¾			90¾			96¾			61½	70¾									8 FLG	2½ NPT							
WS128-2	WS128-4	102¾			102¾			108¾			74½	82⅝									8 FLG	2½ NPT							
WS129-2	WS129-4	114¾			114¾			120¾			85½	94¾									8 FLG	2½ NPT							
WS1210-2	WS1210-4	126¾			126¾			132¾			97½	106¾									8 FLG	2½ NPT							
WS143-2	WS143-4	43⅛			43⅛			50⅞			12½	22									6 FLG	2 NPT							
WS144-2	WS144-4	55⅛			55⅛			62⅞			24½	34									6 FLG	2 NPT							
WS145-2	WS145-4	67⅛			67⅛			74⅞			36½	46									8 FLG	2½ NPT							
WS146-2	WS146-4	79⅛	14⅛	20⅛	79⅛	14⅛	19⅛	86⅞	16⅜	22	48½	58	14	8½	17⅞	1	11⅜	11½	12½	14⅜	8 FLG	2½ NPT	6 NPT	8	3 5/16	5⅞	4 NPT	6 FLG	—
WS147-2	WS147-4	91⅛			91⅛			98⅞			60½	70									8 FLG	2½ NPT							
WS148-2	WS148-4	103⅛			103⅛			110⅞			72½	82									8 FLG	2½ NPT							
WS149-2	WS149-4	115⅛			115⅛			122⅞			84½	94									8 FLG	2½ NPT							
WS1410-2	WS1410-4	127⅛			127⅛			134⅞			96½	106									8 FLG	2½ NPT							
WS163-2	WS163-4	44⅜			43⅜			51¼			—	19¾		9½							8 FLG	2½ NPT							
WS164-2	WS164-4	56⅜			55⅜			63¼			19¼	31¾		9½							8 FLG	2½ NPT							
WS165-2	WS165-4	68⅜			67⅜			75¼			31¼	43¾		9½							8 FLG	2½ NPT							
WS166-2	WS166-4	80⅜	17	23¾	79⅜	16⅛	22¾	87¼	18⅜	25⅛	43¼	55¾	16	9½	19⅞	1	12	12½	14⅝	16½	8 FLG	2½ NPT	6 NPT	9⅛	4	8	4 NPT	6 FLG	—
WS167-2	WS167-4	92⅜			91⅜			99¼			55¼	67¾		9½							8 FLG	2½ NPT							
WS168-2	WS168-4	104⅜			103⅜			111¼			67¼	79¾		12½							10 FLG	3 FLG							
WS169-2	WS169-4	116⅜			115⅜			123¼			79¼	91¾		12½							10 FLG	3 FLG							
WS1610-2	WS1610-4	128⅜			127⅜			135¼			91¼	103¾		12½							10 FLG	3 FLG							
WS183-2	WS183-4	44			44			54			—	18½																	
WS184-2	WS184-4	56			56			66			17	30½																	
WS185-2	WS185-4	68			68			78			29	42½																	
WS186-2	WS186-4	80	16⅜	23	80	16⅜	23	90	19⅝	26¼	41	54½	18	13½	22	1⅛	13⅝	13½	16	18½	10 FLG	4 FLG	6 NPT	11	4⅝	9¼	4 NPT	8 FLG	—
WS187-2	WS187-4	92			92			102			53	66½																	
WS188-2	WS188-4	104			104			114			65	78½																	
WS189-2	WS189-4	116			116			126			77	90½																	
WS1810-2	WS1810-4	128			128			138			89	102½																	
WS203-2	WS203-4	45½		15	44½		15	54⅛			—	13½																	
WS204-2	WS204-4	57½		31	56½		30	66⅛			10½	25½																	
WS205-2	WS205-4	69½		31	68½		30	78⅛			22½	37½																	
WS206-2	WS206-4	81½	23½	31	80½	22⅜	30	90⅛	25¼	33	34½	49½	20	14	24	1⅛	14	16	18	20½	12 FLG	4 FLG	8 NPT	10⅝	4⅜	8¼	6 NPT	8 FLG	
WS207-2	WS207-4	93½		31	92½		30	102⅛			46½	61½																	
WS208-2	WS208-4	105½		31	104½		30	114⅛			58½	73½																	
WS209-2	WS209-4	117½		31	116½		30	126⅛			70½	85½																	
WS2010-2	WS2010-4	129½		31	128½		30	138⅛			82½	97½																	

All Dimensions in Inches

Par 2.2.2.
e. H.W. Converter
Par. 3.7

Armstrong PUMPS

ARMSTRONG PUMPS INC. • 93 East Avenue, North Tonawanda, N.Y. 14120 (716) 693-8813

FORM NO. 6572C/10M/SCS 8/83

PRINTED IN U.S.A.

CERTIFICATES

WELDBEND CORPORATION

7171 WEST 65TH STREET • CHICAGO, ILL. 60638

AREA 312
582 - 3500

Noland Co.
Mr. Dave Dilwy
P.O. Box 3069
Kinston, NC 28501

RE: Unaccompanied Enlisted Personnel Housing
82-B2244
Camp Lejeune, NC

Gentlemen:

This will attest that WELDBEND fittings will conform to ASTM A234, WPB specifications and to ANSI B16.9 requirements.

This will attest that WELDBEND flanges will conform to ANSI B16.5 and to ASTM A105-83 specifications.

This will further attest that based upon industry standards and specifications, including those of the committee A1 on steel of the American Society for Testing and Materials, WELDBEND CORPORATION is the manufacturer of all fittings and flanges sold and shipped on the above job.

All material is sold under terms and conditions as outlined in our catalog.

Performance of this material is guaranteed by WELDBEND CORPORATION as outlined by our warranty and is covered to the extent of $5,000,000.00 under Products Liability Policy #221-00-044611 of the Employers Insurance of Wausau of Wausau, Wisconsin.

Sincerely,

WELDBEND CORPORATION

George J. Rothballer
Vice President

Subscribed and sworn to before me this 10th day of September, 19 84:

Notary Public

My Commission Expires 1-10-88

Par 2.2.2
a. Pipe and Fittings

Par 6.1
6.1.5

LTV Jones & Laughlin

QUALITY CONTROL – METALLURGICAL
BASIC STEEL – EASTERN DIVISION

Sep. 12, 1984

Noland Co.
P. O. Box 3069
Kinston, N. C. 28501

CERTIFICATE OF COMPLIANCE

This is to certify that Continuous Weld pipe, 1/4" thru 4" Black or Galvanized, Standard or Extra Strong, so ordered by you to ASTM A120/ASTM A53 Type F, and Electric Weld pipe 4-½" O.D. thru 12-3/4" O.D. Standard or Extra Strong, Black or Galvanized, so ordered by you to ASTM A53 Grade B, was produced in the United States of America and tested in accordance with all the requirements of the above stated specifications.

D. E. Klesser
D. E. Klesser
Quality Control Supervisor
Welded Tube

Sworn to and subscribed before me

On this 12th day of September 1984 A. D.

James V. LaGrosse Jr.
Notary Public

:jvl

JAMES V. LaGROSSE, JR., NOTARY PUBLIC
ALIQUIPPA BORO, BEAVER COUNTY
MY COMMISSION EXPIRES FEB. 15, 1986
Member, Pennsylvania Association of Notaries

Par 2.2.3
a. Pipe and Fittings
Par 6.1
6.1.5

CERRO COPPER PRODUCTS CO.
A member of The Marmon Group of companies
P.O. Box 681
East St. Louis, Illinois 62202
618/337-6000

13 April, 1984

Noland Co.
2700 Warwick Ave.
Newport News, VA 23607

Attn: Glen Gray

Gentlemen:

We hereby certify that our Alloy C12200 Seamless Copper Water Tube Types K & L supplied for your order number 26011E 76635 complies with the applicable requirements of ASTM Specification B-88 and Federal Specification WW-T-799.

Yours very truly,

CERRO COPPER PRODUCTS CO.
A Member of The Marmon Group of Co.

John Schuster
Laboratory Director

JS/jaw

STATE OF ILLINOIS }
County of St. Clair } SS

Subscribed and sworn to before me this 13th day of April, A.D., 1984.

Donald G. Oliver

Par 2.2.3
a. Pipe and Fittings

Par 6.1
6.1.3

1

MUELLER BRASS CO. PORT HURON, MICHIGAN 48060

Date October 1, 1984

Customer Mcland Company
Street No. P. O. Box 3069
City & State Kinston, NC 28501
Order No.
Attention David Dildy

Contractor Ramsey Air Conditioning
Address
Contract No.
Job Description UEPH #82B2244
Location Camp Johnson, Jacksonville, NC

PRODUCT SPECIFICATIONS
CERTIFICATION OF CONFORMANCE

Mueller Brass products are manufactured in conformance to the latest revisions of the following recognized industry standards.

- [x] WROT COPPER AND COPPER ALLOY SOLDER JOINT PRESSURE FITTINGS — To ANSI B16.22.
- [ ] CAST COPPER ALLOY SOLDER JOINT PRESSURE FITTINGS — To ANSI B16.18.
- [ ] CAST COPPER ALLOY FITTINGS FOR FLARED COPPER TUBES — To ANSI B16.26.
- [ ] STREAMLINE COPPER WATER TUBE — TYPES K, L & M — To ASTM B88 and WWT-799.
- [ ] REFRIGERATION FLARE-TYPE FITTINGS — To SAEJ513, and Military Standards MS-16993, MS-35867 thru MS-35873 inclusive, MS-35919 and MS-35926.
- [ ] STREAMLINE COPPER REFRIGERATION SERVICE TUBE — To ASTM B280, and WWT-775.
- [ ] STREAMLINE NITROGENIZED ACR HARD DRAWN COPPER TUBE — To ASTM B88 - Type L, in accordance with ASTM B280.
- [ ] OXYGEN SERVICE TUBE — To ASTM B88, Types K and L — hard drawn lengths only — in accordance to CDA cleanliness specifications and NFPA 56F, Seamless Copper Tube cleaned for Oxygen Gas Service.
- [ ] WROT COPPER AND COPPER ALLOY SOLDER JOINT DRAINAGE FITTINGS - DWV — To ANSI B16.29.
- [ ] CAST COPPER ALLOY SOLDER JOINT DRAINAGE FITTINGS - DWV — To ANSI B16.23.
- [ ] STREAMLINE COPPER DRAINAGE TUBE - DWV — To ASTM B306.
- [ ] COPPER PIPE — To ASTM B42.
- [ ] RED BRASS PIPE — To ASTM B43 — Can be supplied in hard temper.

Yours truly,
MUELLER BRASS CO.

By James D. Hinson

Subscribed and sworn to before me this 2nd day of October 1984

Kathryn L. Cook (RPL)
Notary My Commission Expires May 6, 1987

Par 2.2.2
a. Pipe and Fittings
Par 6.1
6.1.5

STANLEY G. FLAGG & CO., INC.

THREADED PIPE FITTINGS:
MALLEABLE IRON
CAST IRON
BRONZE

MANUFACTURERS SINCE FF EIGHTEEN FIFTY-FOUR

THREADLESS PIPE FITTINGS:
BRONZE FLAGG-FLOW
CAST BRONZE SOLDER
WROUGHT COPPER SOLDER

STOWE, MONTGOMERY COUNTY
PENNSYLVANIA 19464
215-326-9000

September 10, 1984

Noland Company
P.O. Box 3069
Kinston, North Carolina 28501

Attention: David Dildy

For: Unaccompanied Enlisted Personnel Housing
#82-B-22-44
Camp Lejeune, North Carolina

Subject: CERTIFICATE OF COMPLIANCE

Dear Mr. Dildy,

This is to certify that the fittings manufactured and/or supplied by Stanley G. Flagg & Company, Inc., comply with and conform to specifications as indicated below:

STANDARD MALLEABLE IRON
Fed. Spec. W.W.-P-521
ANSI B 16.3 (Dimensions)
A.S.T.M. A-197 (Chemical and Physical Peoperties)
A.S.T.M. A-153 (Galvanizing)
ANSI B-2.1 (Pipe Threads)

EH MALLEABLE IRON
ANSI B 16.3 (Dimensions)
A.S.T.M. Std. A-197 (Chemical and Physical Properties)
A.S.T.M. A-153 (Galvanizing)
ANSI B-2.1 (Pipe Threads)

Par. 2.2.3
a. Pipe and Fittings
Par 6.1
6.1.5

MEMBER apfa AMERICAN PIPE FITTINGS ASSOCIATION

a DMI company

BLACK AND GALVANIZED STANDARD STEEL NIPPLES (WELDED)
(Specifications A.S.T.M. A-120)
Standard Black and Galvanized - 1/8" thru 4"

BLACK AND GALVANIZED EXTRA HEAVY STEEL NIPPLES (WELDED)
(Specifications A.S.T.M. A-120)
Extra Black and Galvanized - 1/8" thru 4"

STANLEY G. FLAGG & COMPANY, INC.

Albert E. Schaefer
Treasurer

AES/kea

Par 2.2.3
a. Pipe and Fittings
Par 6.1
6.1.3

Sworn to and subscribed before
me this 10 day of Sept 1984
Kathryn E. Asmuth

Notary Public, West Pottsgrove, Montg. Co.
My Commission Expires January 6, 1986

Armstrong PUMPS

ARMSTRONG ASME EXPANSION TANK SUBMITTAL DATA

File No: 5035.96
Date: Apr. 25, 1983
Supersedes: 5036.96
Date: Jan. 25, 1982

MODEL AET - CAPACITIES 15 GALS. THROUGH 505 GALS.

☑ Painted ☐ Galvanized

CUSTOMER	CUSTOMER'S ORDER NO.	ARMSTRONG REFERENCE
RAMSEY AIR COND	0521	—

ENGINEER	JOB REFERENCE	LOCATION
DEWEY R. WINCHESTER	UPEH, MCB CAMP LEJEUNE, NC	CAMP LEJEUNE N.C.

SPECIFICATION REFERENCE
SEC. 15801, PAGE 19, PAR. 6.3.8

QUANTITY: 2

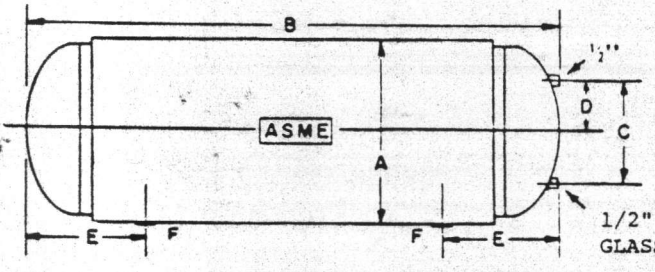

ASME - NB HORIZONTAL EXPANSION TANKS

MAXIMUM TEMPERATURE 650°F

NOTES:

1. Tanks are constructed to the ASME Code for Unfired Pressure Vessels.
2. Tanks are registered with National Board of Boiler and Pressure Vessel Inspectors.
3. Tell tale holes are furnished in lieu of inspection opening on sizes through 135 gals. Two 2" plugged inspection openings are provided on sizes 175 gals. through 505 gals.
4. Gauge glass tappings included. (Fittings not furnished by Armstrong Pumps Inc.)
5. ☑ Tanks painted with one (1) coat red oxide enamel.

   ☐ Tanks galvanized.

WITH ANGLE CLIPS

REQUIRED TANK FITTING	MODEL NO.	CAPACITY GALS.	A	B	C	D	E	F NPT	WEIGHT LBS.	WORKING PRESSURE
TMA-12	AET 12 x 33	15	12"	33"	8"	4"	7"	1"	46	150#
TMA-12	AET 12 x 51	24	12"	50-1/2"	8"	4"	7"	1"	64	150#
TMA-14	AET 14 x 48	30	14"	48"	10"	5"	8-3/8"	1"	67	150#
TMA-14	AET 14 x 63	40	14"	63"	10"	5"	8-3/8"	1"	85	150#
TMA-16	AET 16 x 72	60	16"	72"	12"	6"	9-1/4"	1"	115	150#
TMA-20	AET 20 x 62	80	20"	62-1/2"	16"	8"	10"	1"	134	125#
TMA-20	AET 20 x 78	100	20"	78"	16"	8"	10"	1"	166	125#
TMA-24	AET 24 x 65	120	24"	65"	20"	10"	11-1/8"	1"	199	125#
TMA-24	AET 24 x 72	135	24"	72"	20"	10"	11-1/8"	1"	219	125#
TMAL	AET 30 x 62	175	30"	62-1/4"	22"	11"	13-1/2"	1-1/2"	304	125#
TMAL	AET 30 x 77	220	30"	77"	22"	11"	13-1/2"	1-1/2"	364	125#
TMAL	AET 30 x 84	240	30"	84"	22"	11"	13-1/2"	1-1/2"	394	125#
TMAL	AET 30 x 105	305	30"	105-3/4"	22"	11"	13-1/2"	1-1/2"	489	125#
TMAL	AET 36 x 71	285	36"	71-1/4"	28"	14"	14-3/4"	1-1/2"	498	125#
TMAL	AET 36 x 93	400	36"	93-1/2"	28"	14"	14-3/4"	1-1/2"	647	125#
TMAL	AET 36 x 120	505	36"	120-3/4"	28"	14"	14-3/4"	1-1/2"	802	125#

PREPARED BY ..TOM BURTON.. Par. 2.2.2

DATE ..3-23-84.. b... Tanks

Par. 6.3.8

Form No. 6552-E

ARMSTRONG PUMPS INC.
NORTH TONAWANDA, N.Y. 14120

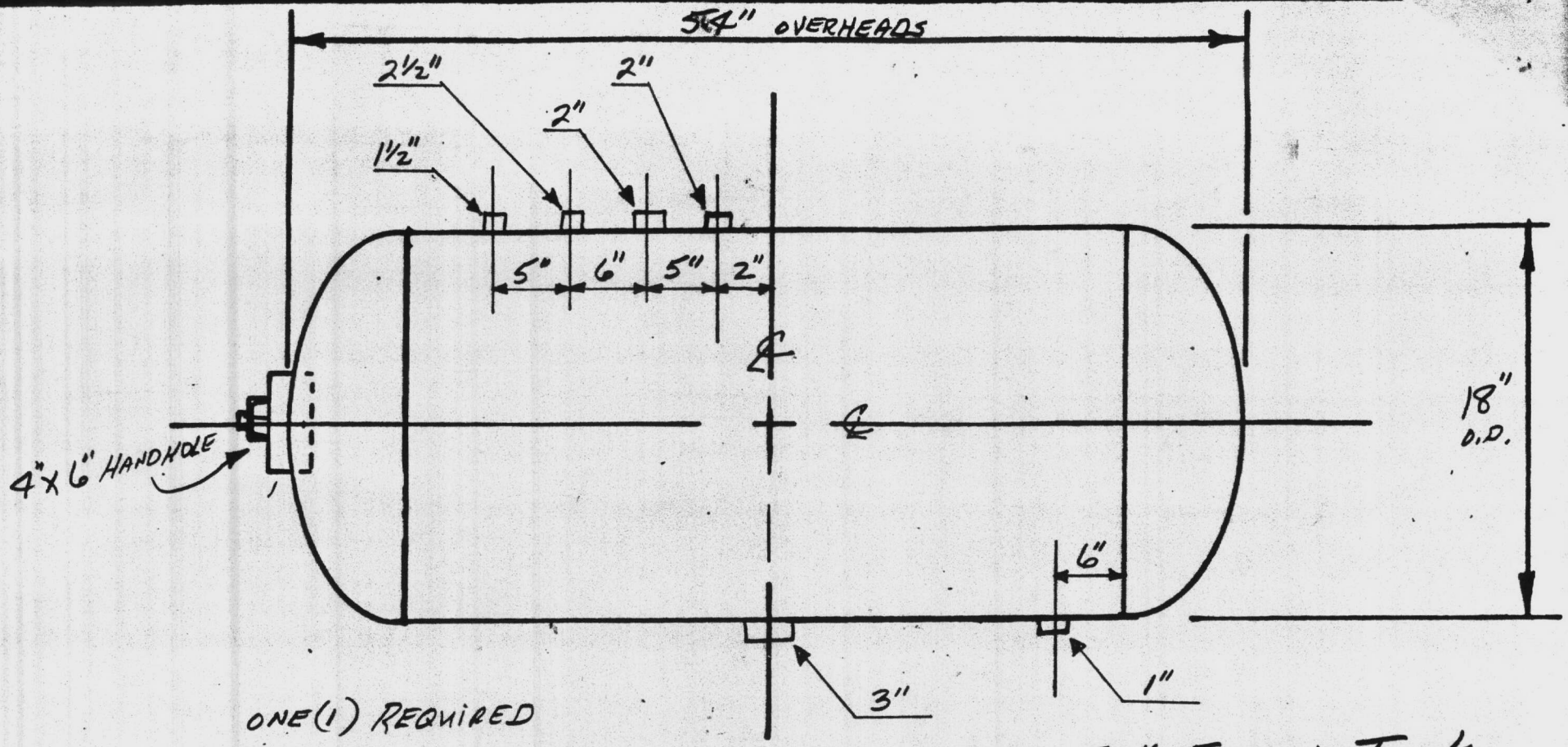

ONE (1) REQUIRED

18"x54" FLASH TANK

NOTES:

1. ASME STAMPED FOR 125# D.P. TEST AT 188#.
2. OUTSIDE PAINTED ONE SHOP COAT OF GRAY PRIMER.

Par 2.2.3
b. Tanks.
Par 6.3.8

PROJECT	ENLISTED MEN'S BARRACKS CAMP LEJEUNE, N.C.
CUSTOMER	RAMSEY AIR COND., INC.
SCALE – NONE	REVISIONS –
DATE – 3-24-84	DRAWN BY – MLC
J.J. FINNIGAN CO. INC.	ATLANTA 18 GEORGIA
CUSTOMER'S P.O. NUMBER	DRAWING NUMBER
0533	A-84 5740B

ARMSTRONG VORTEX AIR SEPARATOR SUBMITTAL DATA

File No: 5035.955
Date: April 5, 1982
Supersedes: 5035.955
Date: Sept. 20, 1974

MODELS: VA-2 TO VA-12 LESS STRAINER
VAS-2 TO VAS-12 WITH STRAINER

CUSTOMER	CUSTOMER'S ORDER NO.	ARMSTRONG REFERENCE
RAMSEY AIR COND	0521	—

ENGINEER	JOB REFERENCE
DEWEY R. WINCHESTER	UPEH, MCB CAMP LEJEUNE, N.C.

SPECIFICATION REFERENCE	QUOTATION REFERENCE
SEC. 15801, PAGE 19, PAR. 6.3.9	—

MODEL NUMBER	MAXIMUM FLOW
VAS-5	500 USGPM

WORKING CONDITIONS

MAXIMUM WORKING PRESSURE	125 psi
MAXIMUM WORKING TEMPERATURE	350°F
HYDROSTATIC TEST PRESSURE	200 psi

CONSTRUCTION OF VORTEX AIR SEPARATOR

Fabricated steel shell constructed according to ASMECode for Unfired Pressure Vessels.

Form U-1A Manufacturer's Data Sheet signed by N.B. Inspector provided in accordance with ASME Code for the following units ONLY: VAS - VAS5 to VA12 - VAS12 inclusive.

Certificates are not required, and are not available, for smaller Units VA2 - VAS2 to VA4 - VAS4 inclusive.

Connections provided for :
(a) Main inlet and outlet flow
(b) Air connections for line to compression tank
(c) Drain flushing connection at bottom to eliminate dirt and sediment
(d) With strainer (✓) without strainer ( )

SPECIFICATIONS

VERTICALLY MOUNTED AIR SEPARATOR HAVING STEEL TANK WITH TANGENTIAL INLET AND OUTLET FOR SEPARATION OF AIR IN HYDRONIC SYSTEM AND TO ACT AS A SEDIMENT TRAP.

SUITABLE FOR PIPE-LINE MOUNTING.

PREPARED BY: Tom BURTON

DATE: 3-23-84

Par. 2.2.3
b. Tanks
Par. 6.3.9

REMARKS AND/OR ACCESSORIES

DIMENSIONS: SEE REVERSE SIDE

Armstrong PUMPS

ARMSTRONG PUMPS INC.
North Tonawanda, N. Y. 14120

m No. 6429-E